Parts Catalog

RX-7 U.S.A.&Canada ('79 ► '80)

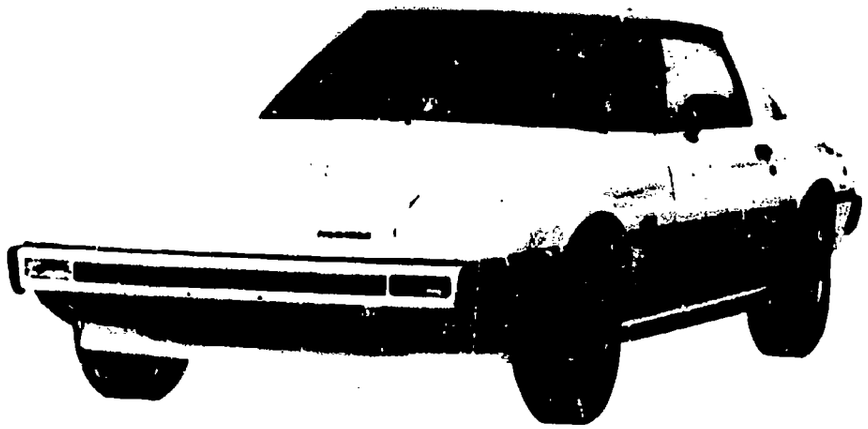

SA22C-500001~650000

CONTENTS

The following charts provide you with the general layout and contents location of Mazda parts catalogs, but some sections may vary slightly in detail.

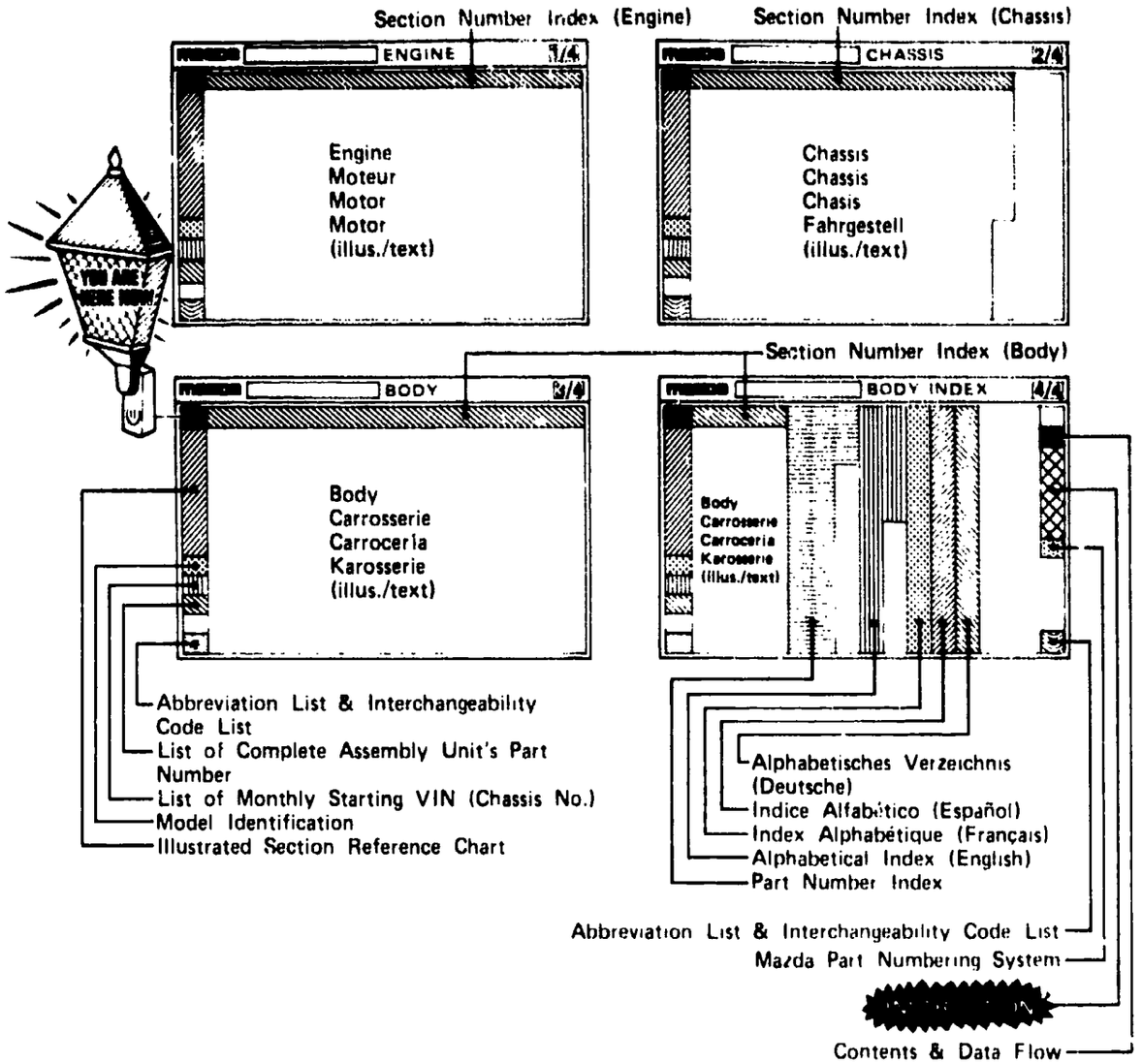

May '83 (FINAL)

Catalog NO. 1111-MF-USAA-08

mazda

© 1983 Toyo Kogyo Co., Ltd.

ILLUSTRATED SECTION REFERENCE CHART

ROTARY ENGINE (1/2)

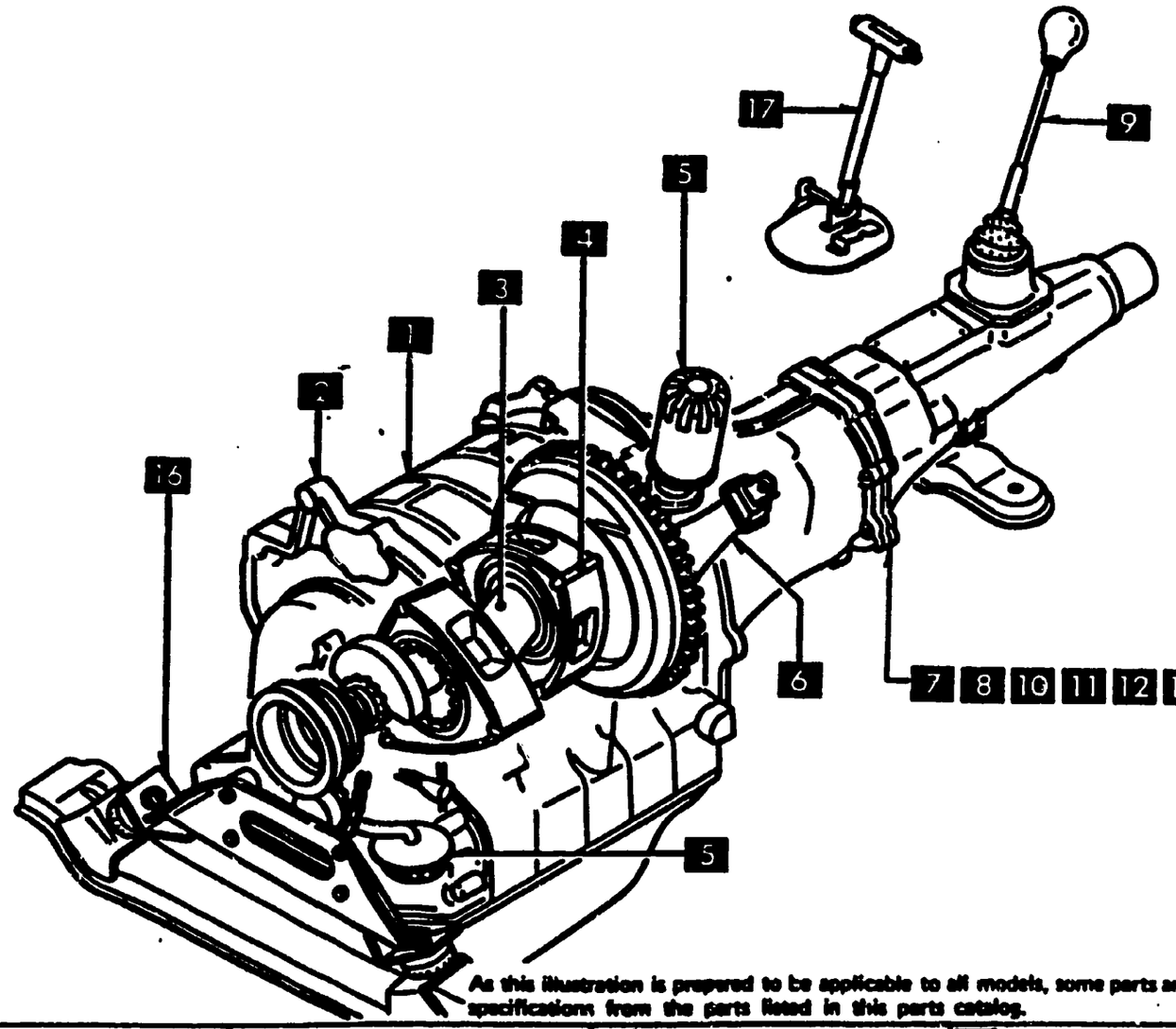

As this illustration is prepared to be applicable to all models, some parts are different in specifications from the parts listed in this parts catalog.

1000A



SHORT ENGINE & GASKET SETS

1 1030A



ROTOR HOUSING

2 1040A



OIL PAN & FRONT & REAR HOUSINGS

3 1100A

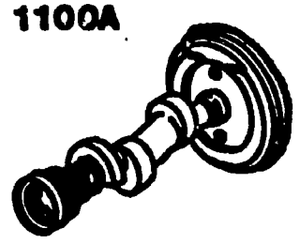

ECCENTRIC SHAFT & FLYWHEEL

4 1110A



ROTOR & RELATED

5 1400A

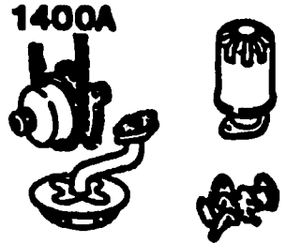

OIL PUMP & FILTER

6 1600A



CLUTCH (MANUAL)

7 1700A

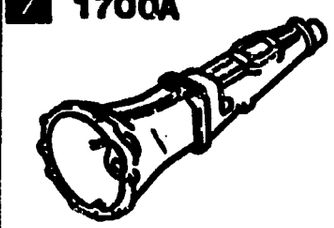

T/MISSION CASE (MANUAL)

8 1710A

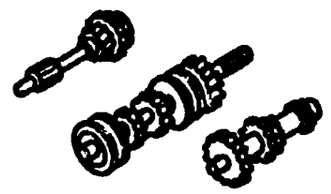

T/MISSION GEARS (MANUAL)

9 1720A

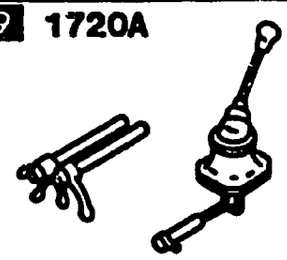

CHANGE CONTROLS (MANUAL)

10 1900A

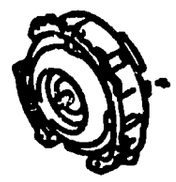

TORQUE GLIDE (MANUAL)

11 1910A

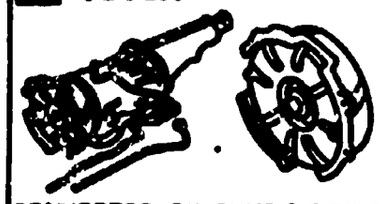

CONVERTER, OIL PUMP & PIPING (AUTOMATIC T/MISSION)

12 1920A

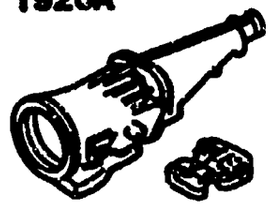

CASE & MAIN CONTROLS (AUTOMATIC T/MISSION)

13 1930A

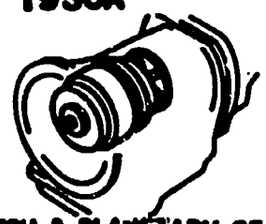

CLUTCH & PLANETARY GEARS (AUTOMATIC T/MISSION)

14 1940A

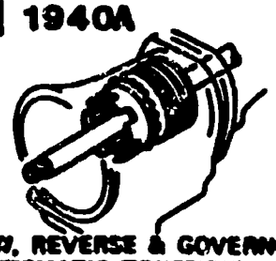

LOW, REVERSE & GOVERNOR (AUTOMATIC T/MISSION)

15 1950A



MANUAL LINKAGE (AUTOMATIC T/MISSION)

16 3900A

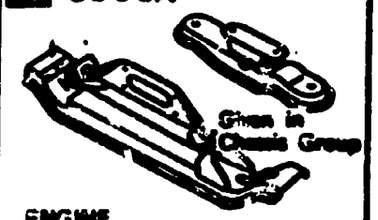

ENGINE & T/MISSION MOUNTINGS

17 4600A

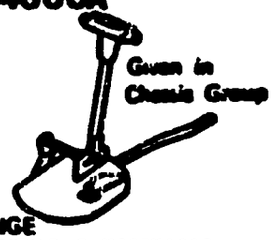

CHANGE CONTROLS (MANUAL)

ILLUSTRATED SECTION REFERENCE CHART

1 1300A



IN. MANIFOLD

2 1310A

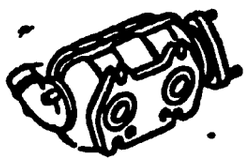

THERMAL REACTOR

3 1320A

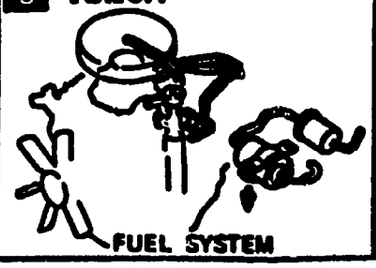

FUEL SYSTEM

4 1330A

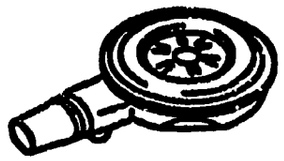

AIR CLEANER

5 1350A



STARTING ASSIST SYSTEM

6 1360A



CARBURETOR

ROTARY ENGINE (2/2)

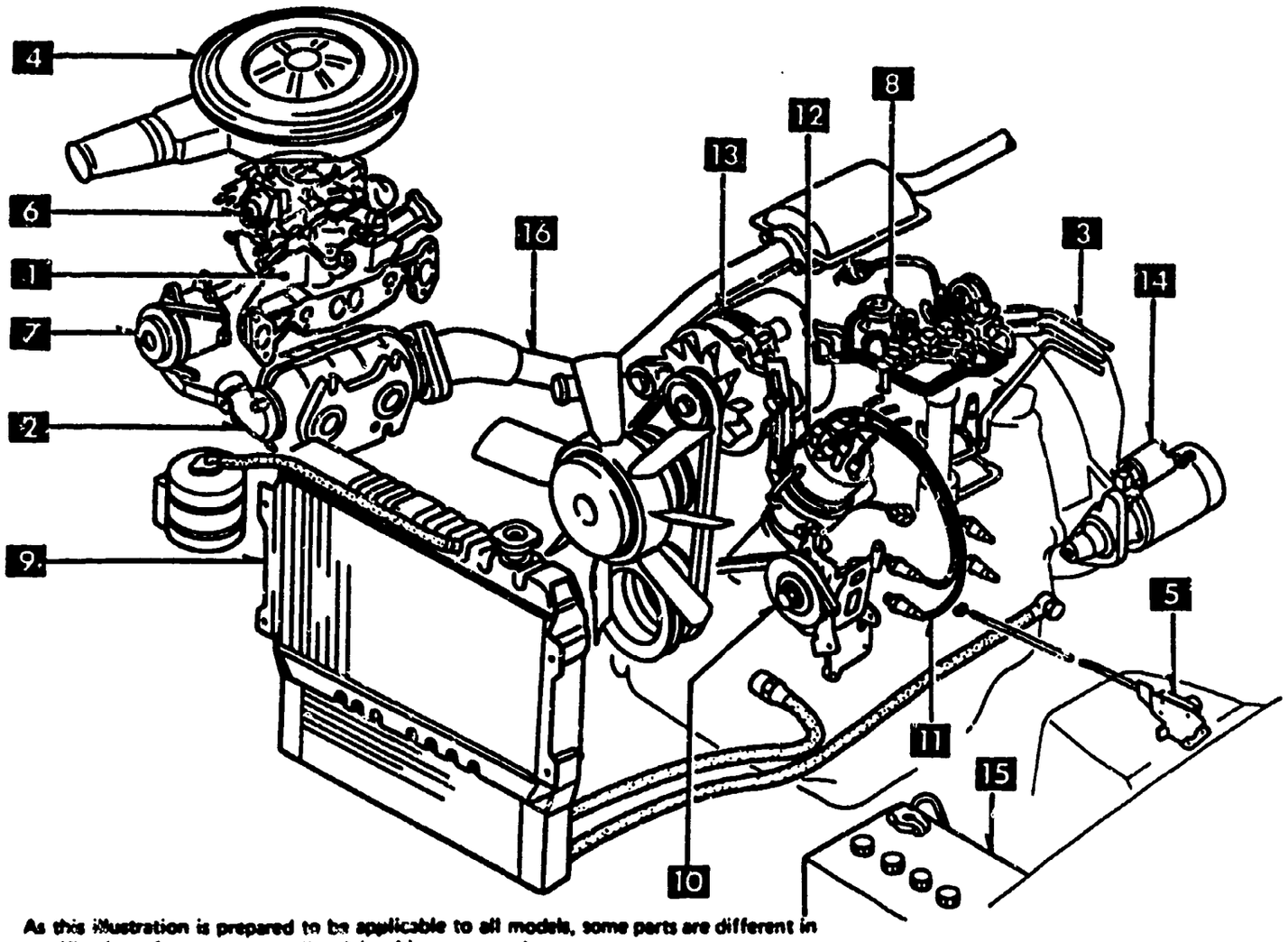

As this illustration is prepared to be applicable to all models, some parts are different in specifications from the parts listed in this parts catalog.

7 1371A



EMISSION CONTROLS (AIR PUMP & CONTROL VALVE)

8 1380A



EMISSION CONTROLS (EX. SIDE)

9 1500A

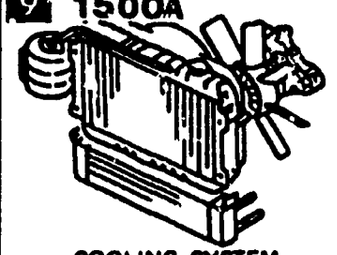

COOLING SYSTEM

10 1580A

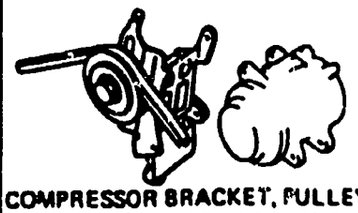

COMPRESSOR BRACKET, PULLEY & BELT (AIR CONDITIONER)

16 4000A

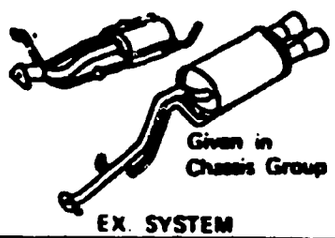

EX. SYSTEM

15 1850A

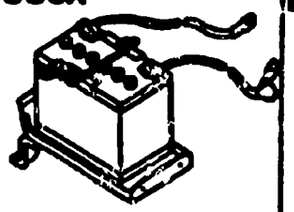

BATTERY & CABLES

14 1840A



STARTER

13 1830A



ALTERNATOR

12 1820A



DISTRIBUTOR

11 1800A

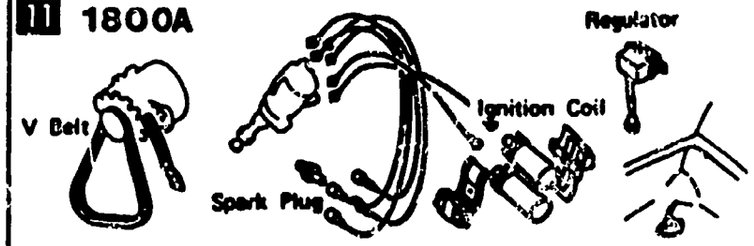

ELECTRICAL SYSTEM (ENGINE)

ILLUSTRATED SECTION REFERENCE CHART

CHASSIS (1/2)

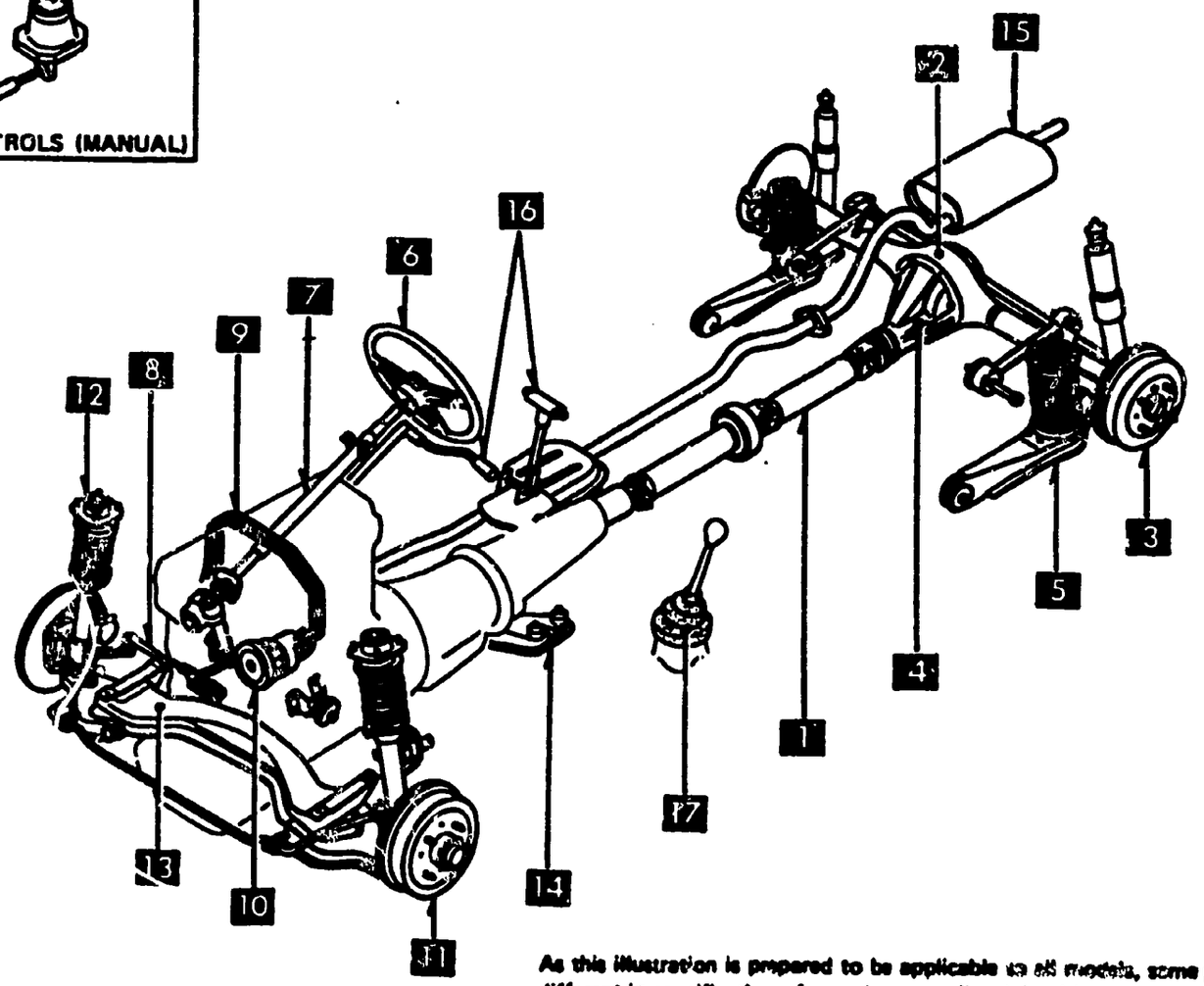

As this illustration is prepared to be applicable to all models, some parts are different in specifications from the parts listed in this parts catalog.

1 2500A

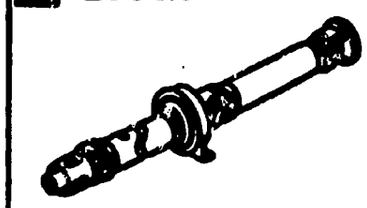

PROPELLER SHAFT

2 2600A

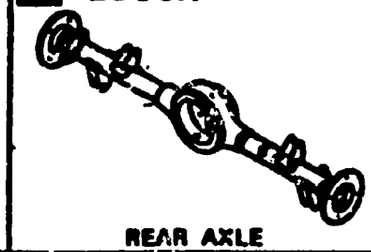

REAR AXLE

3 2610A



REAR BRAKES

4 2700A

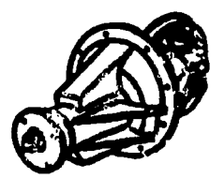

DIFFERENTIAL

5 2800A

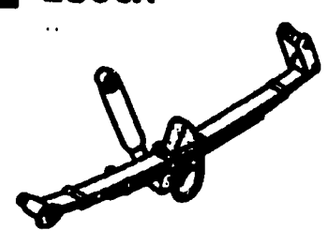

REAR SUSPENSION

6 3200A



STEERING WHEEL

7 3210A

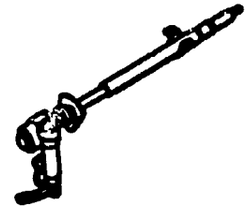

STEERING GEAR & COLUMN

8 3230A

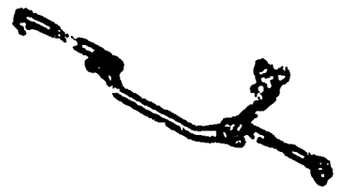

STEERING LINKAGE

9 3240A



POWER STEERING SYSTEM

10 3260A



VANE PUMP (POWER STEERING)

11 3300A



FRONT AXLE & BRAKES

12 3400A

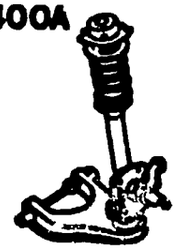

FRONT SUSPENSION

13 3410A

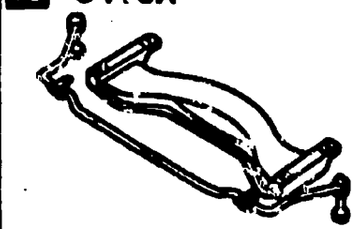

CROSSMEMBER & STABILIZER

14 3900A

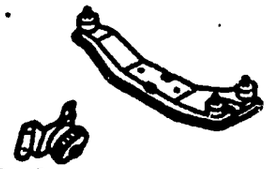

ENGINE & T/MISSION MOUNTINGS

15 4000A

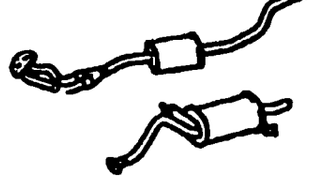

EX. SYSTEM

16 4600A

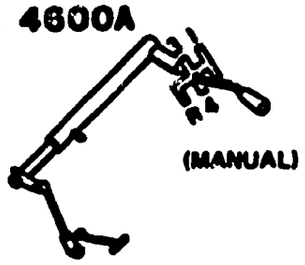

CHANGE CONTROLS

17 1720A



CHANGE CONTROLS (MANUAL)

ILLUSTRATED SECTION REFERENCE CHART

1 3700A

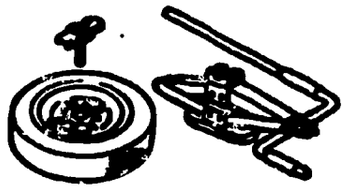

TIRE & JACK

2 4140A



CLUTCH RELEASE & MASTER CYLINDERS

3 4160A



ACCELERATOR CONTROLS

4 4200A

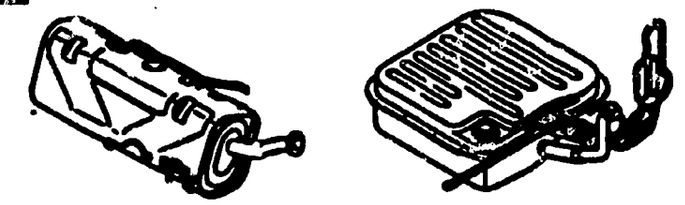

FUEL TANK

5 4300A

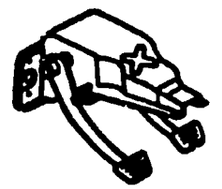

CLUTCH & BRAKE

CHASSIS (2/2)

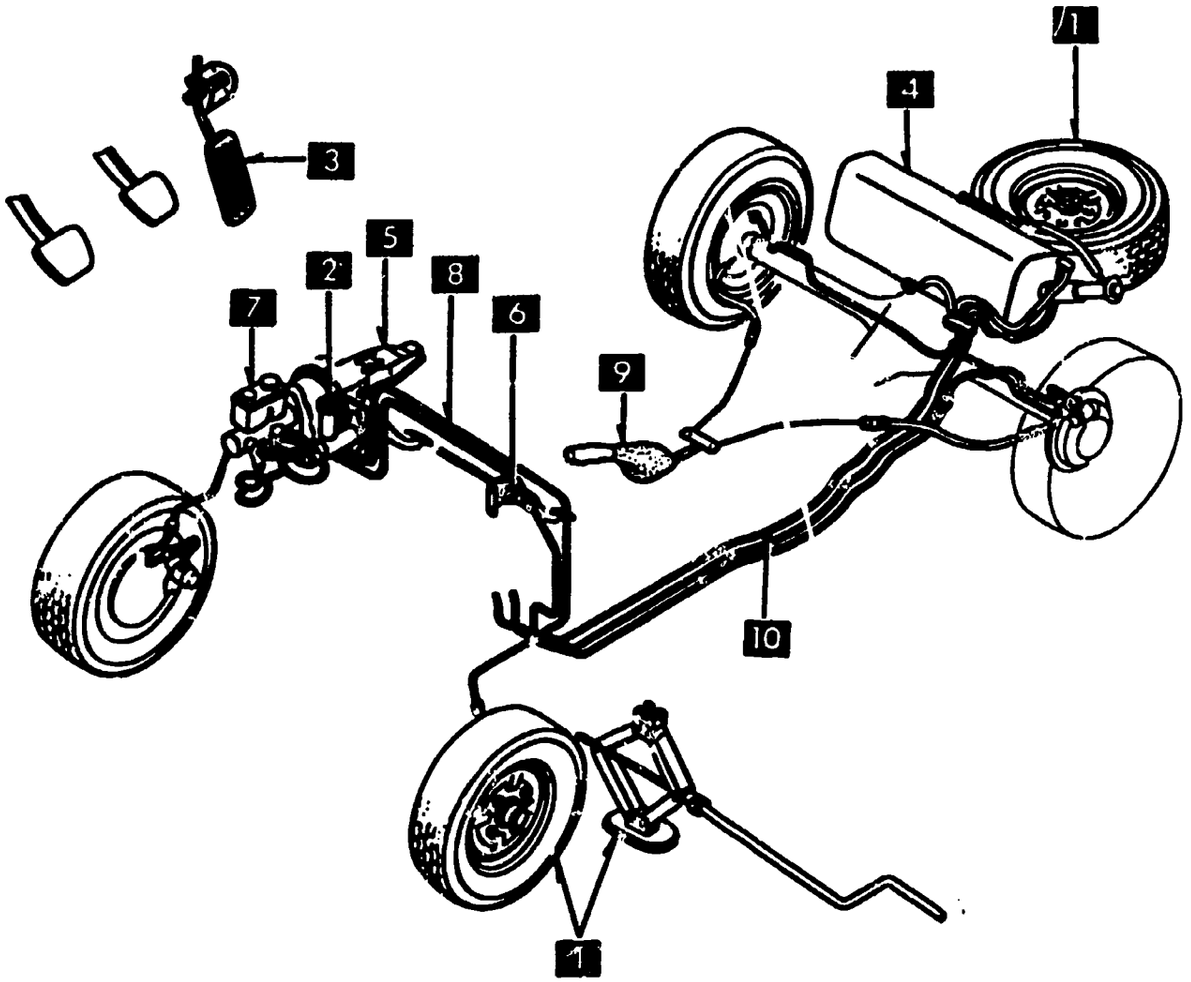

As this illustration is prepared to be applicable to all models, some parts are different in specifications from the parts listed in this parts catalog.

6 4310A



ASSIST BRAKE (FOR DRIVING SCHOOL)

7 4340A

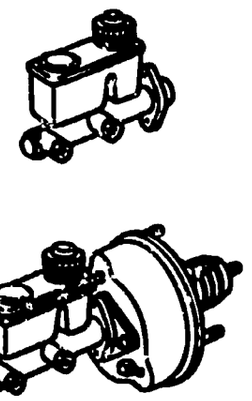

TANDEM MASTER CYL. & VACUUM POWER ASSIST SYSTEM

8 4360A



BRAKE PIPING

10 4500A

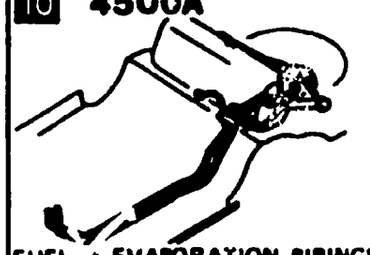

FUEL & EVAPORATION PIPINGS

9 4400A

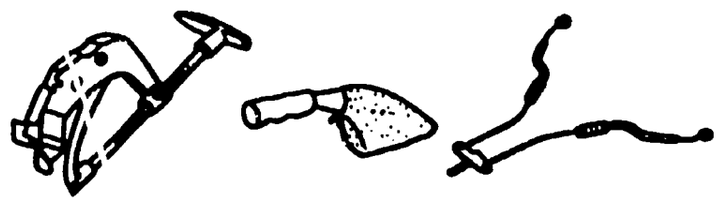

PARKING BRAKE SYSTEM

ILLUSTRATED SECTION REFERENCE CHART

1 0900A

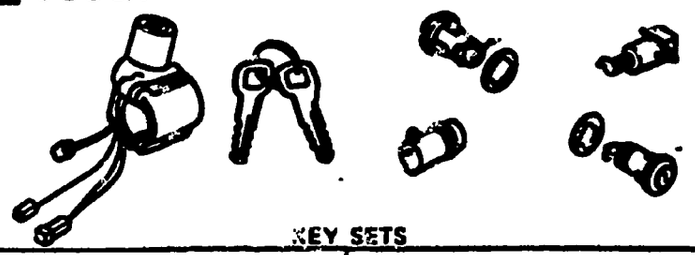

KEY SETS

2 5020A



HEAD LAMP CLEANER

3 5100A



LAMPS (FRONT & SIDE)

4 5110A



LAMPS (REAR & INTERIOR)

BODY(1/3)

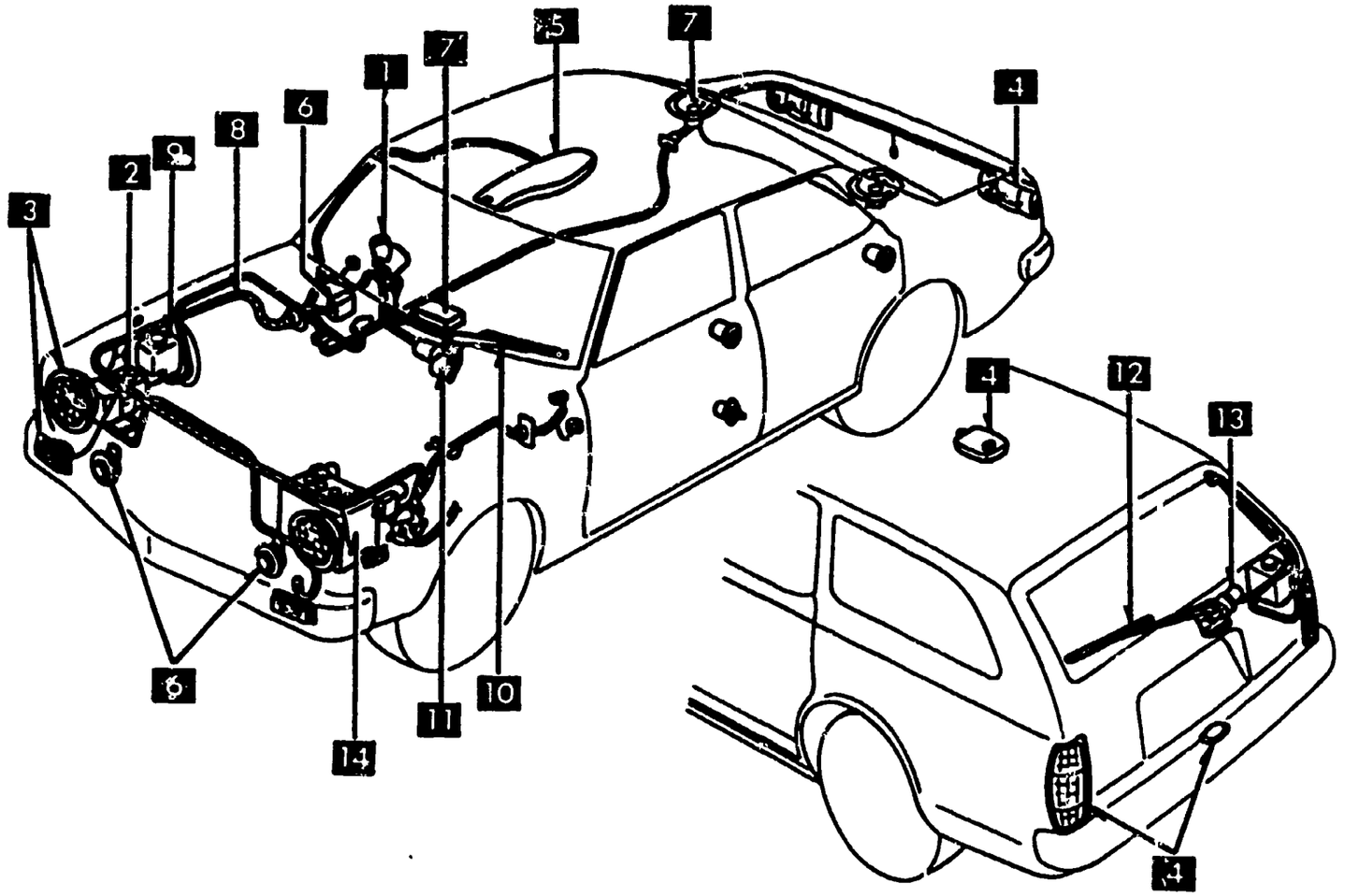

As this illustration is prepared to be applicable to all models, some parts are different in specifications from the parts listed in this parts catalog.

5 5130A



OVERHEAD CONSOLE

6 6600A

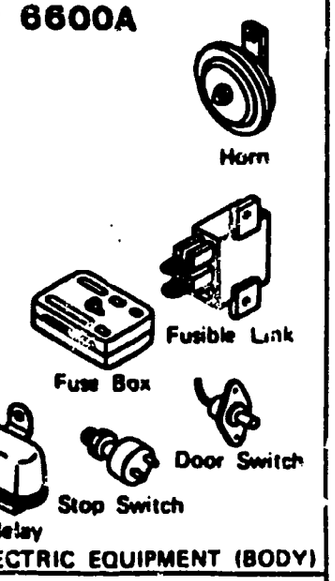

ELECTRIC EQUIPMENT (BODY)

7 6680A

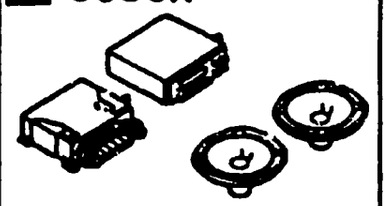

RADIO & STEREO SYSTEMS

14 1850A

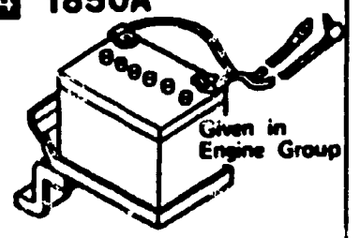

BATTERY & CABLES

13 6760A



REAR WINDOW WIPER MOTOR (COMPONENTS ONLY)

12 6750A

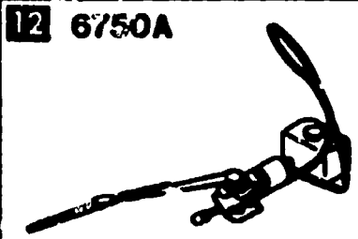

REAR WINDOW WIPER & WASHER

11 6740A



WIPER MOTOR (COMPONENTS ONLY)

10 6730A



WINDSHIELD WIPER

9 6720A

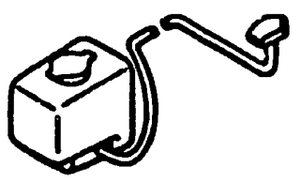

WINDSHIELD WASHER

8 6700A



WIRE HARNESS & CLAMPS

ILLUSTRATED SECTION REFERENCE CHART

1 5000A

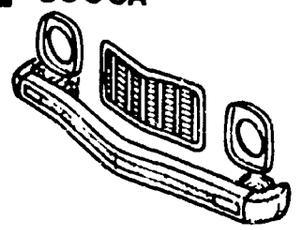

FRONT BUMPER & GRILLE

2 5010A

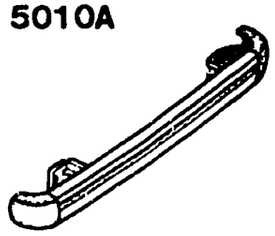

REAR BUMPER

3 5030A

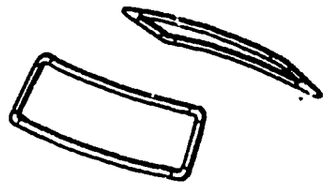

WINDOW MOULDINGS

4 5040A

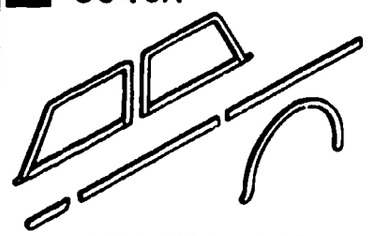

BODY MOULDINGS

5 5170A

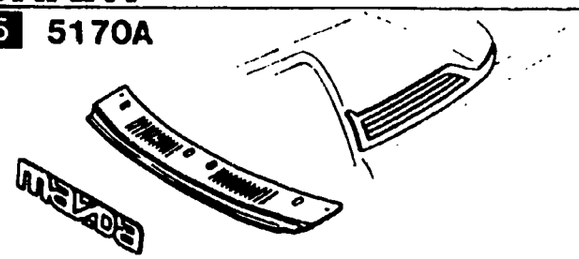

COWL & EXTRACTOR GRILLES & ORNAMENTS

18 7250A

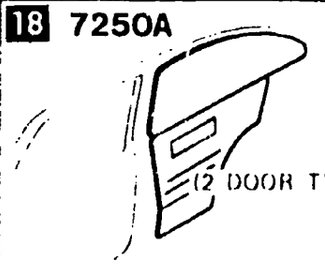

REAR WINDOW GLASS & TRIM

17 7230A

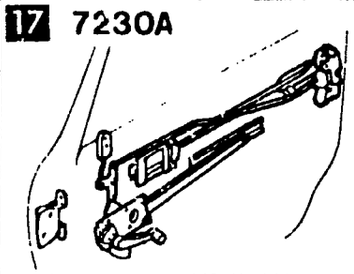

REAR DOOR MECHANISMS

16 7200A REAR DOOR

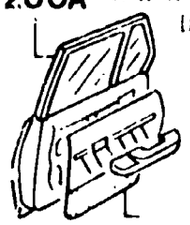

15 6330A

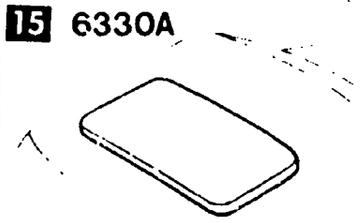

SUNROOF

BODY(2/3)

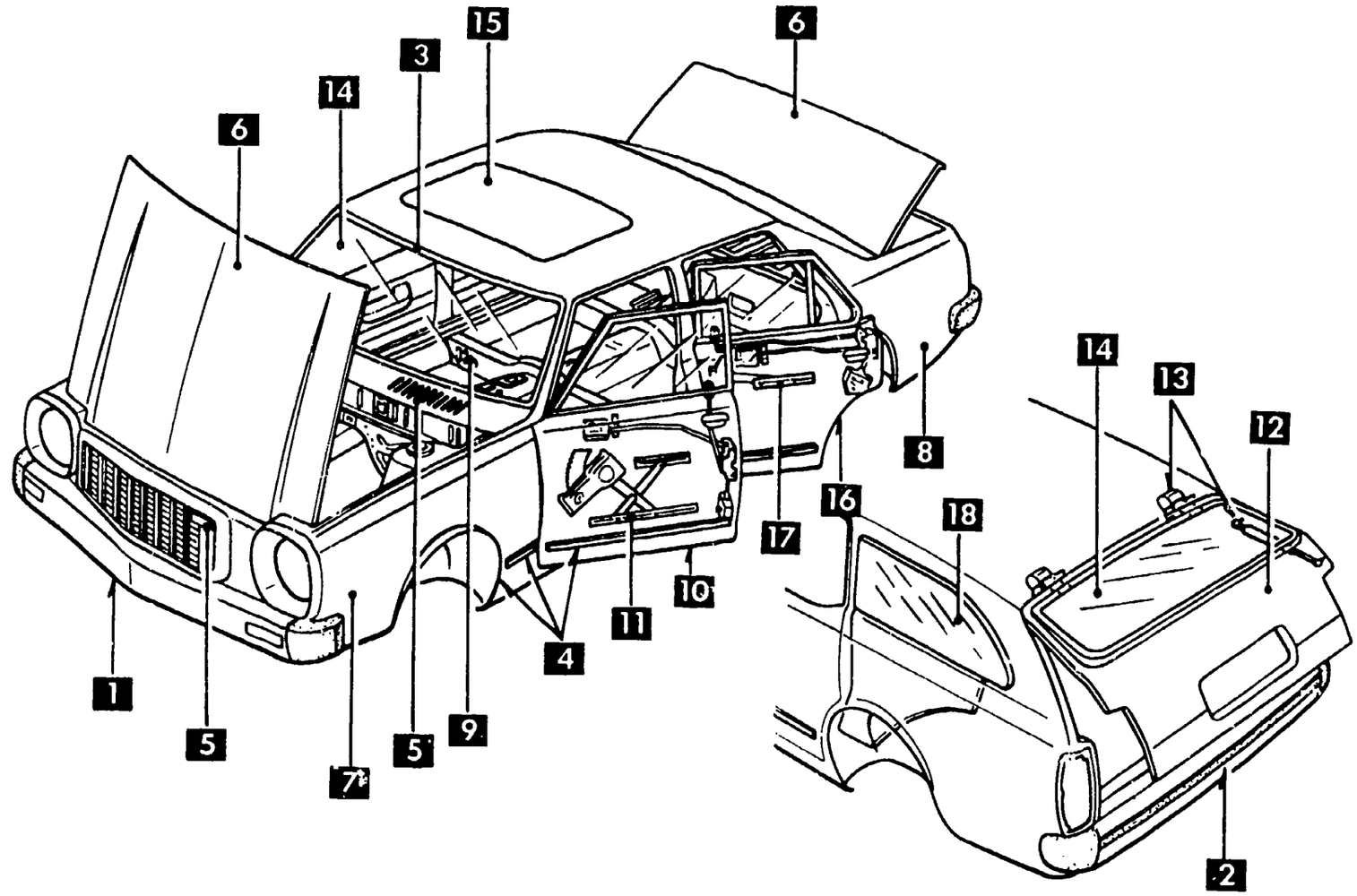

As this illustration is prepared to be applicable to all models, some parts are different in specifications from the parts listed in this parts catalog.

6 5230A

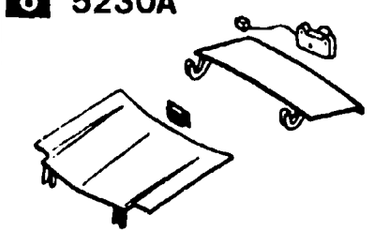

BONNET & TRUNK LID

7 5310A

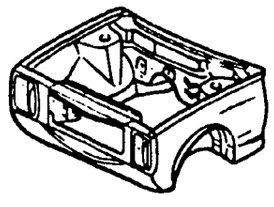

BODY PANELS (FRONT)

8 5340A

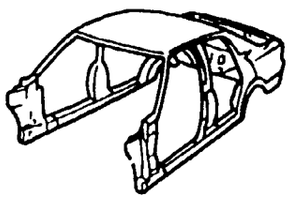

BODY PANELS (SIDE & ROOF)

9 5360A

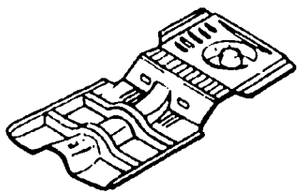

FLOOR ATTACHMENT
BODY PANELS (FLOOR)

14 6300A

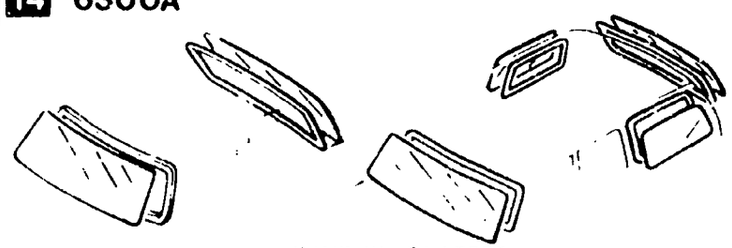

WINDOW GLASSES

13 6230A

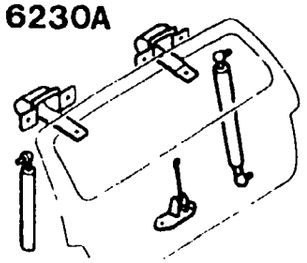

BACK DOOR MECHANISMS

12 6200A

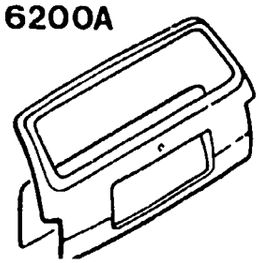

BACK DOOR

11 5830A

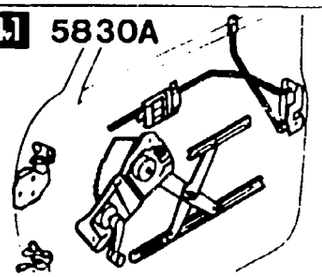

FRONT DOOR MECHANISMS

10 5800A

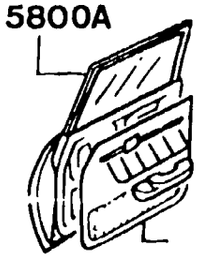

ILLUSTRATED SECTION REFERENCE CHART

1 5500A

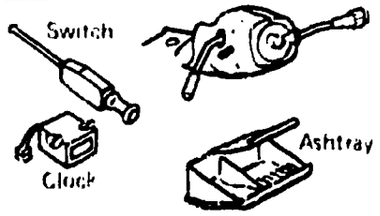

DASHBOARD EQUIPMENT

2 5540A

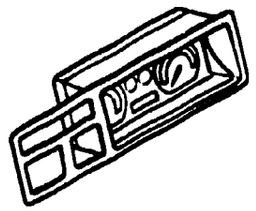

METERS

3 5560A

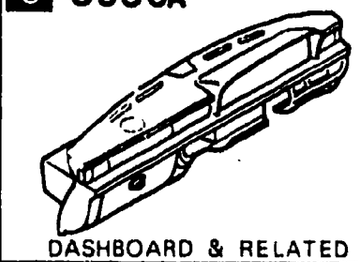

DASHBOARD & RELATED

4 5570A

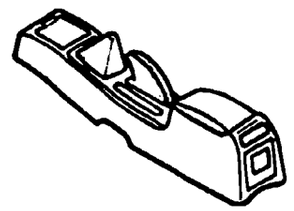

CONSOLE

5 5580A

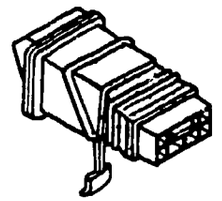

VENTILATOR

6 5700A
5710A

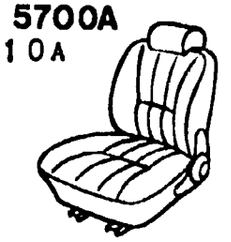

FRONT SEAT

17 6930A

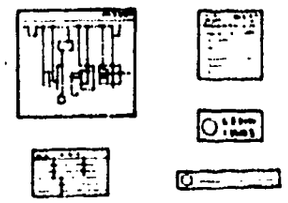

CAUTION PLATES

16 6900A



VISOR, ASSIST HANDLE & MIRRORS

15 6870A

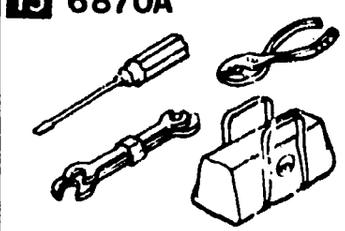

SERVICE TOOLS

14 6860A

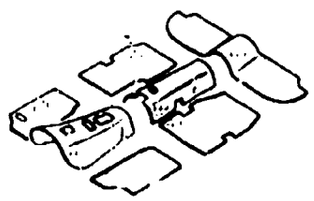

FLOOR MATS & PADS

BODY(3/3)

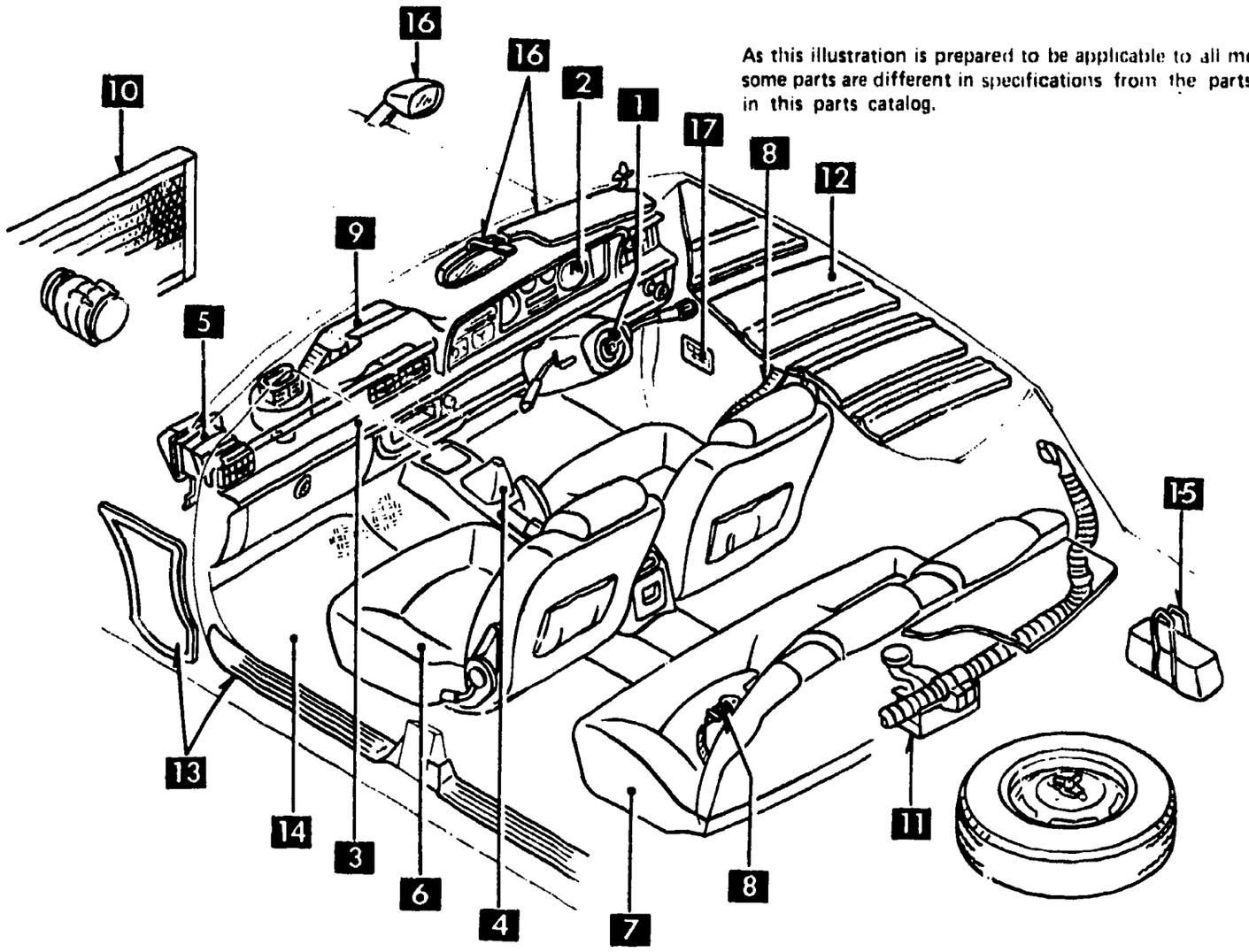

As this illustration is prepared to be applicable to all models, some parts are different in specifications from the parts listed in this parts catalog.

8 5760A

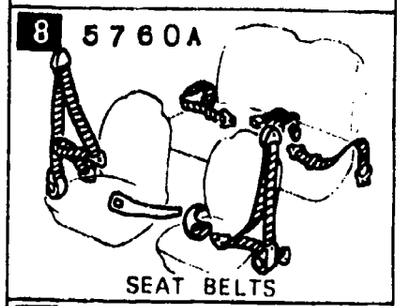

SEAT BELTS

9 6100A

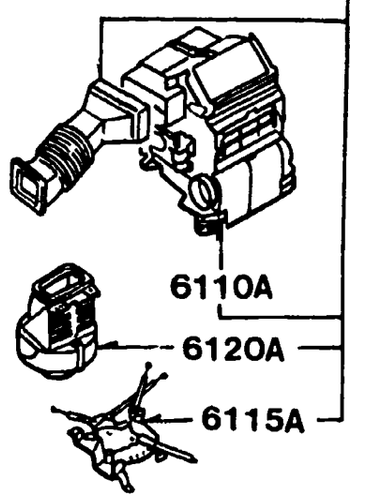

HEATER

13 6840A

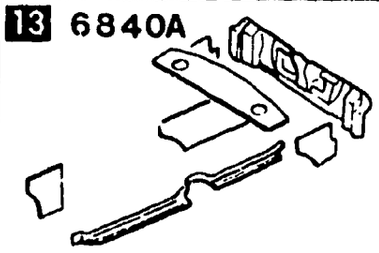

TRIM & SCUFF PLATE

12 6800A

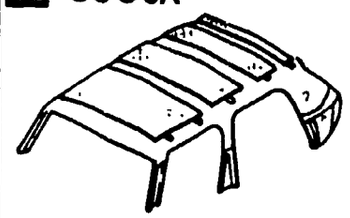

CEILING TRIM

11 6180A

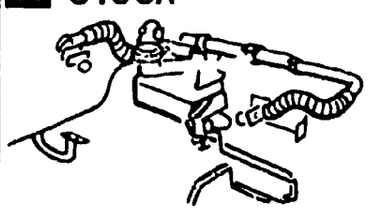

REAR COOLER

10 6130A

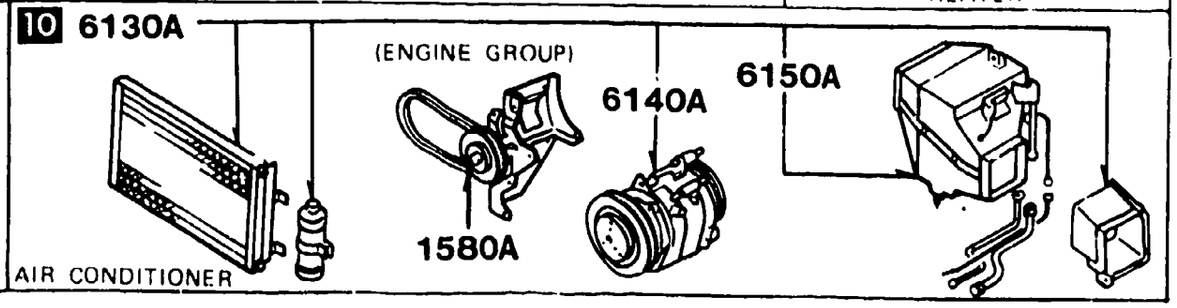

AIR CONDITIONER

MODEL IDENTIFICATION

This parts catalog has been compiled to cover the following models.
MAZDA RX-7, 1979 Year Model for U.S.A. and Canada (Manuf. From March 1978)
MAZDA RX-7, 1980 Year Model for U.S.A. and Canada (Manuf. From June 1979)

Model No.	Model/Type	Country			Roof Type		Engine (Rotary 12A)	Transmission			Model Year		V. I. N. (Chassis No.)
		U.S.A. California (CF)	U.S.A. Federal (FD)	Canada (CN)	Sunroof (SUN)	Std. Roof (STD)	(12A)	Manual 4-Speed (4S)	Manual 5-Speed (5S)	Automatic (A/T)	1979	1980	
8867	SA22C	CF				STD	12A	4S			●		SA22C-500001 ~ 568500
8868	SA22C-P	CF				STD	12A		5S		●		SA22C-500001 ~ 568500
8869	SA22C-T	CF				STD	12A			A/T	●		SA22C-500001 ~ 568500
8970	SA22C-RP	CF			SUN		12A		5S		●		SA22C-500001 ~ 568500
8971	SA22C-RT	CF			SUN		12A			A/T	●		SA22C-500001 ~ 568500
8870	SA22C		FD	CN		STD	12A	4S			●		SA22C-500001 ~ 568500
8871	SA22C-P		FD	CN		STD	12A		5S		●		SA22C-500001 ~ 568500
8872	SA22C-T		FD	CN		STD	12A			A/T	●		SA22C-500001 ~ 568500
8973	SA22C-RP		FD	CN	SUN		12A		5S		●		SA22C-500001 ~ 568500
8974	SA22C-RT		FD	CN	SUN		12A			A/T	●		SA22C-500001 ~ 568500
8343	SA22C	CF				STD	12A	4S				●	SA22C-568501 ~ 650000
8344	SA22C-P	CF				STD	12A		5S			●	SA22C-568501 ~ 650000
8345	SA22C-T	CF				STD	12A			A/T		●	SA22C-568501 ~ 650000
8348	SA22C-RP	CF			SUN		12A		5S			●	SA22C-568501 ~ 650000
8349	SA22C-RT	CF			SUN		12A			A/T		●	SA22C-568501 ~ 650000

Model No.	Model/Type	Country			Roof Type		Engine (Rotary 12A)	Trans mission			Model Year		V. I. N. (Chassis No.)
		U.S.A. California (CF)	U.S.A. Federal (FD)	Canada (CN)	Sunroof (SUN)	Std. Roof (STD)	(12A)	Manual 4-Speed (4S)	Manual 5-Speed (5S)	Automatic (A/T)	1979	1980	
8340	SA22C		FD			STD	12A	4S				●	SA22C-568501 ~ 650000
8341	SA22C-P		FD			STD	12A		5S			●	SA22C-568501 ~ 650000
8342	SA22C-T		FD			STD	12A			A/T		●	SA22C-568501 ~ 650000
8346	SA22C-RP		FD		SUN		12A		5S			●	SA22C-568501 ~ 650000
8347	SA22-RT		FD		SUN		12A			A/T		●	SA22C-568501 ~ 650000
8484	SA22C			CN		STD	12A	4S				●	SA22C-568501 ~ 650000
8485	SA22C-P			CN		STD	12A		5S			●	SA22C-568501 ~ 650000
8486	SA22C-T			CN		STD	12A			A/T		●	SA22C-568501 ~ 650000
8487	SA22C-RP			CN	SUN		12A		5S			●	SA22C-568501 ~ 650000
8488	SA22C-RT			CN	SUN		12A			A/T		●	SA22C-568501 ~ 650000

LIST OF MONTHLY STARTING VIN (CHASSIS No.)

Year/Month	JAN.	FEB.	MAR.	APR.	MAY	JUN.	JUL.	AUG.	SEP.	OCT.	NOV.	DEC.
Model	78/1	78/2	78/3	78/4	78/5	78/6	78/7	78/8	78/9	78/10	78/11	78/12
RX-7	–	–	500001	502999	504977	508587	510189	512943	516625	520638	525594	531149

Year/Month	JAN.	FEB.	MAR.	APR.	MAY	JUN.	JUL.	AUG.	SEP.	OCT.	NOV.	DEC.
Model	79/1	79/2	79/3	79/4	79/5	79/6	79/7	79/8	79/9	79/10	79/11	79/12
RX-7	536458	541117	547089	554325	559740	566641	569399	574180	578961	583527	588207	592950

Year/Month	JAN.	FEB.	MAR.	APR.	MAY	JUN.	JUL.	AUG.	SEP.	OCT.	NOV.	DEC.
Model	80/1	80/2	80/3	80/4	80/5	80/6	80/7	80/8	80/9	80/10	80/11	80/12
RX-7	597273	602250	606775	611388	615692	619393	624203	629533	629954	–	–	–

LIST OF COMPLETE ASSEMBLY UNIT'S PART NUMBER

Cpt. Model No.	Engine cpt.	T/mission cpt.	Rear Axle cpt.	Cabin cpt.	Remarks
8340	8340 02 000	8867 03 000	8871 05 000	8341 07 010	Fed. 4-Speed Std. Roof
8341	8340 02 000	8868 03 000	8871 05 000	8341 07 010	Fed. 5-Speed Std Roof
8342	8342 02 000	8872 19 090	8871 05 000	8341 07 010	Fed. A/T Std. Roof
8343	8344 02 000	8867 03 000	8871 05 000	8341 07 010	Calif. 4-Speed Std. Roof
8344	8344 02 000	8868 03 000	8871 05 000	8341 07 010	Calif. 5-Speed Std. Roof
8345	8345 02 000	8872 19 090	8871 05 000	8341 07 010	Calif. A/T Std. Roof
8346	8340 02 000	8868 03 000	8871 05 000	8346 07 010	Fed. 5-Speed Sunroof
8347	8342 02 000	8872 19 090	8871 05 000	8346 07 010	Fed. A/T Sunroof
8348	8344 02 000	8868 03 000	8871 05 000	8346 07 010	Calif. 5-Speed Sunroof
8349	8345 02 000	8872 19 090	8871 05 000	8346 07 010	Calif A/T Sunroof
8484	8485 02 000	8484 03 000	8871 05 000	8341 07 010	Canada 4-Speed Std. Roof
8485	8485 02 000	8485 03 000	8871 05 000	8341 07 010	Canada 5-Speed Std. Roof
8486	8486 02 000	8872 19 090	8871 05 000	8341 07 010	Canada A/T Std. Roof
8487	8485 02 000	8485 03 000	8871 05 000	8346 07 010	Canada 5-Speed Sunroof
8488	8486 02 000	8872 19 090	8871 05 000	8346 07 010	Canada A/T Sunroof

Note: Complete assemblies are available manufactured in accordance with current production specifications only.

ABBREVIATION LIST (English)

(M)

Abbreviation	Definiton	Abbreviation	Definiton
1 ST	First	..F	Feet
2 ND	Second	FED.	Federal
3 D.	3-Door	FIX.	Fixing
3 RD	Third	FOLD.	Folding
4-SPD	4-Speed	FRT. or F.	Front
4 TH	Fourth	F/SHIFT	Floor Shift
5 D.	5-Door		
5 SPD	5 Speed		
14-FT	14-Feet Box		
		..G	Grams
		GAS.	Gasoline
..A	Ampere	GEN.	General
ACCEL.	Accelerator		
ADJ.	Adjust		
A.D.R.	Australia Design Rule	HARN	Harness
AIR CON.	Air Conditioner	HEAT. or HEA.	Heater
ALUMI	Aluminum	HIGHT.	High-Tension
A/REST	Arm Rest	H/LAMP	Headlamp
ASS'Y	Assembly	H.B.RE.	Hatchback Release
ATT.	Attachment	H/TOP or H/T	Hardtop
A/T	Automatic Transmission		
AUST.	Australia		
AUTO.	Automatic		
		IG. or IGN.	Ignition
		IN.	Inlet
		IND.	Indicator
BAL.	Balance	INJ.	Injection
B/DOOR	Back Door	INN.	Inner
BDY.	Body	INS.	Insulation
BELT.	Beltline	INST.	Instrument
BRG.	Bearing	INT.	Interior
BRKT.	Bracket	INTMT.	Intermittent
BRT.	Britain (=The United Kingdom)		
BUMP.	Bumper		
		..L	Liters
		L=	Length
(C), C. or CTR.	Center	(L) or L	Left
CABN.	Cabin	L/BODY	Long Body
CALIF.	California	L/BOX	Long Box
CARB	Carburettor	LH. SIDE	Left Hand Side
CE.	Conventional Engine (=Reciprocating Engine)	L.H.D.	Left Hand Drive
		LWR.	Lower
CLG.	Ceiling	L/VAN	Light Van
COMB.	Combination		
COMP.	Companion		
CONN.	Connector or Connecting	MA. CYL.	Master Cylinder
CONS	Console	MAINT.	Maintain
COVR	Cover	MLD. or MLDG	Moulding
CPT	Complete Assembly	MPX.	Multiplex
C/SHIFT	Column Shift	MT.	Mounting
CYL.	Cylinder	M/T	Manual Transmission
D.	Door	NO.	Number
D=	Diameter	NON T/CABIN	Non Tilt Cabin
DAY & NIGHT AJST	Day & Night Adjust Table	NOR. ROOF	Normal Roof
D/CABIN	Double Cabin	NOZ.	Nozzle
DEF	Defroster		
DIAPH	Diaphragm		
DIFF.	Differential		
DISC/B	Disc Brake	ORD. BY	Order By
DIST.	Distributor	O.S.	Oversize
DR.	Door	OUT.	Outer
DRUM/B	Drum Brake		
D/TIRE	Dual Tires		
DX.	Deluxe		
DUMP.	Dump Truck	P.	Panel
		(P)	Primary
		PARK. or PARKG.	Parking
		PASS.	Passenger
E G R	Exhaust Gas Recirculation	P. BOARD	Partition Board
ELEC	Electric	P C V.	Positive Crankcase Ventilation
EM	Emission Control System		
ENEGY or ENGY	Energy	PHLPPNS	The Philipines
ENG	Engine	PILR.	Pillar
EQUIP	Equipment	PKG.	Package
EX	Exhaust	PNL	Panel
EXC	Except.	POSIT	Positive
EXTRACT	Extractor	P.P	Polypropylene
		P S	Power Steering
		P/S	Power Steering

Abbreviation	Definition	Abbreviation	Definition
P.T.O.	Power Take Off	SW.	Switch
P/VAN	Panel Van	S. WASHER	Screen Washer
P/W or P. WINDOW	Power Window	SWD.	Sweden
		SYNC.	Synchronizer
QTR.	Quarter		
		..T	Tons
		T=	Thickness
		T/CABIN	Tilt Cabin
(R) or R	Right	T/CEILING	Top Ceiling
RAD.	Radiator	TH.	Throttle
RE.	Rotary Engine	THERM.	Thermostat
RECIPRO	Reciprocating Engine (=Conventional Engine)	THROT.	Throttle
		T/MISSION	Transmission
REGUL.	Regulator	T/L	Tubeless
REG. CABN	Regular Cabin	T/STEERING	Tilt Steering
REL.	Release		
REM. CON. or REMO. CON.	Remote Controlled		
RET.	Return	U.K.	The United Kingdom
RETAIN.	Retaining	UP	Upper
REV.	Reverse	URETANE	Urethane Rubber
R. H. SIDE	Right Hand Side	U.S.	Undersize
R.H.D.	Right Hand Drive		
RR. or R.	Rear		
		..V	Volts
		V.	Valve
(S)	Secondary	VAC.	Vacuum
SAFE.	Safety	Vent.	Ventilator, Ventilation
S/BODY	Short Body		
S/BOX	Short Box		
SELECT	Selective use		
SET. TYPE	Separate Type	..W	Watts
SIG.	Signal	W=	Width
SILVER M.	Silver Metallic	W/...	With
SNGL TIRE	Single Tire	W/CHASSIS	Windshield Chassis
SOL.	Solenoid	W/GER. or W. GERMANY	West Germany
SPEC.	Specification	WIND.	Window
SPEEDO	Speedometer	W/O	Without
SPL. TYPE	Split Type	W. PUMP	Water Pump
SPG.	Spring	WSHLD	Windshield
SPK.	Speaker	WSTR. or WTHSTP.	Weatherstrip
ST.	Steering	W/T	With Tube
STA. WAGON	Station Wagon		
STAB.	Stabilizer		
SUB T/MISSION	Sub Transmission		
STD.	Standard		
S/TIRE	Single Tire		

INTERCHANGEABILITY CODE LIST

Code	Definition	
AN	⟷ (Both Ways)	A new part and the former part are fully interchangeable.
A	⟶ (One Way)	A new part can be used in place of the former part, but the former part cannot be used in place of a new part.
C	Plus	A new part with some additional part(s) can be used in place of the former part.
G	Plus	Some modification work is required to use a new part in place of the former part.
S	⟵ (One Way Backward)	The former part can be used in place of a new part, but a new part cannot be used in place of the former part

SECTION NUMBER INDEX (CHASSIS)

STARTING LOCATION	SECTION No.	SECTION NAME
2–C2	2500A	PROPELLER SHAFT
2–D2	2600A	REAR AXLE
2–E2	2610A	REAR BRAKES
2–C3	2700A	DIFFERENTIAL
2–F3	2800A	REAR SUSPENSION
2–C4	3200A	STEERING WHEEL
2–F4	3210A	STEERING GEAR & COLUMN
2–H4	3230A	STEERING LINKAGE
2–C5	3300A	FRONT AXLE & BRAKES
2–H5	3400A	FRONT SUSPENSION
2–K5	3410A	CROSSMEMBER & STABILIZER
2–C6	3700A	TIRE & JACK
2–G6	3900A	ENGINE & T/MISSION MOUNTINGS
2–C7	4000A	EX. SYSTEM
2–C8	4140A	CLUTCH RELEASE & MASTER CYLINDERS (MANUAL)
2–E8	4160A	ACCELERATOR CONTROLS
2–F8	4200A	FUEL TANK
2–C9	4300A	CLUTCH & BRAKE
2–E9	4340A	TANDEM MASTER CYLINDER & VACUUM POWER ASSIST SYSTEM
2–H9	4360A	BRAKE PIPINGS
2–C10	4400A	PARKING BRAKE SYSTEM
2–E10	4500A	FUEL & EVAPORATION PIPINGS
2–H10	4600A	CHANGE CONTROLS (AUTOMATIC)

THE FRAMES IN THIS COLUMN INDICATE :

2---C2	2500A	PROPELLER SHAFT
2---D2	2600A	REAR AXLE
2---E2	2610A	REAR BRAKES

© 1983 Toyo Kogyo Co., Ltd.
MAY 1983

2500A PROPELLER SHAFT

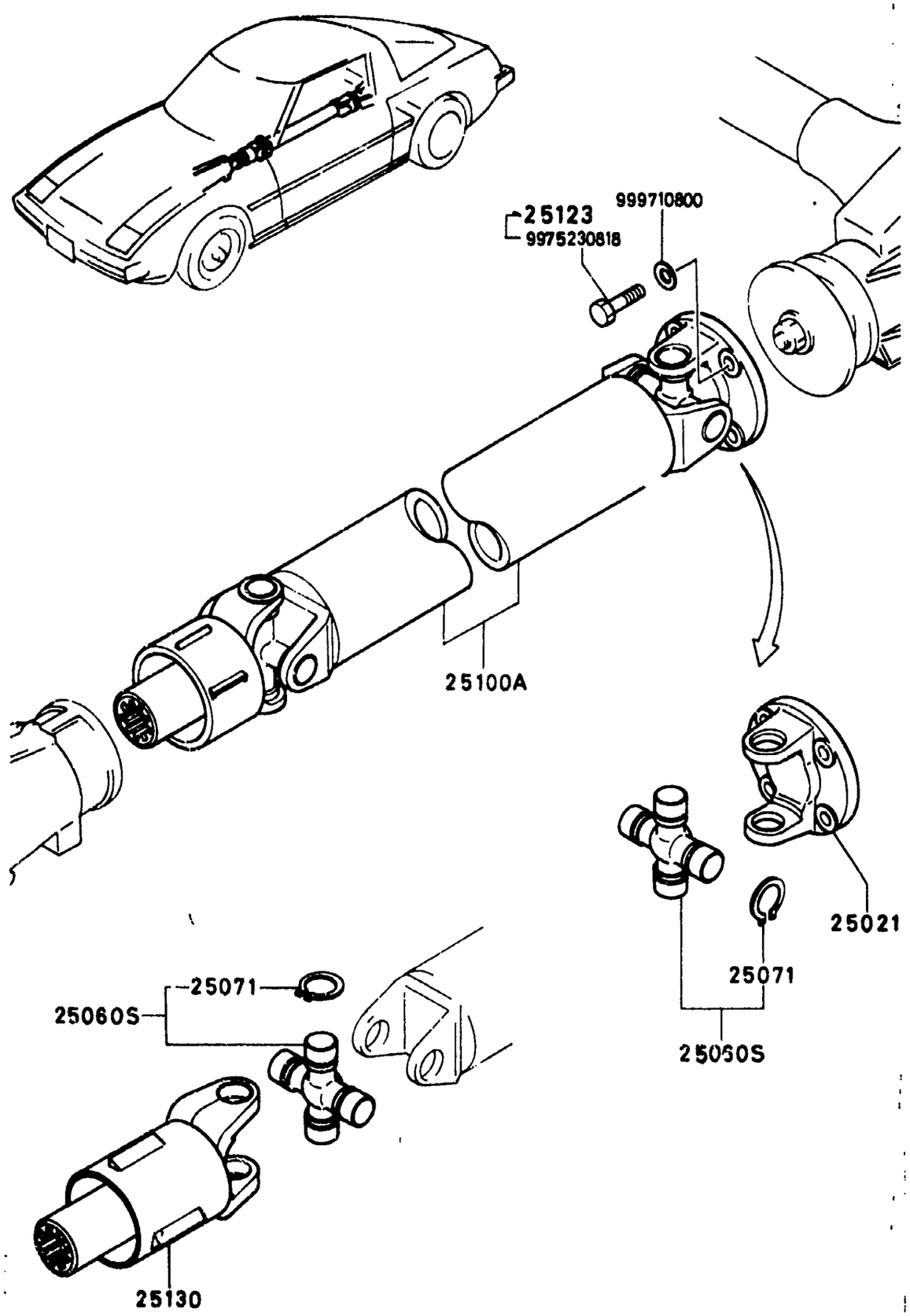

2500A-1* PROPELLER SHAFT

D·CODE (Key No.)	PART NAME	PART No.	Qty.	MODEL/DESCRIPTION	VIN (Chassis No.)
25021	YOKE,UNIVERSAL JOINT MANCHON DE CROISILLON CULATA,JUNTA UNIVERSAL	0259-25-021B	1		
25060S	JOINT SET, UNIVERSAL JEU CARDAN	0259-89-251	2		
25071	RING,SNAP CALE ANILLO,SEGURO	0259-25-071A	8	(T=1.22)	
		0259-25-072A	8	(T=1.24)	
		0259-25-073A	8	(T=1.26)	
		0259-25-074A	8	(T=1.28)	
		0259-25-075A	8	(T=1.30)	
		0259-25-076A	8	(T=1.32)	
		0259-25-077A	8	(T=1.34)	
		0259-25-078A	8	(T=1.36)	
		0259-25-079A	8	(T=1.38)	
25100A	SHAFT,PROPELLER ARBRE TRANSMISSION	8871-25-100	1		
25123	BOLT BOULON PERNO	1393-25-123	4		SA22C .. 578961-
25130	YOKE MANCHON CULATA	0425-25-130	1		

2600A REAR AXLE

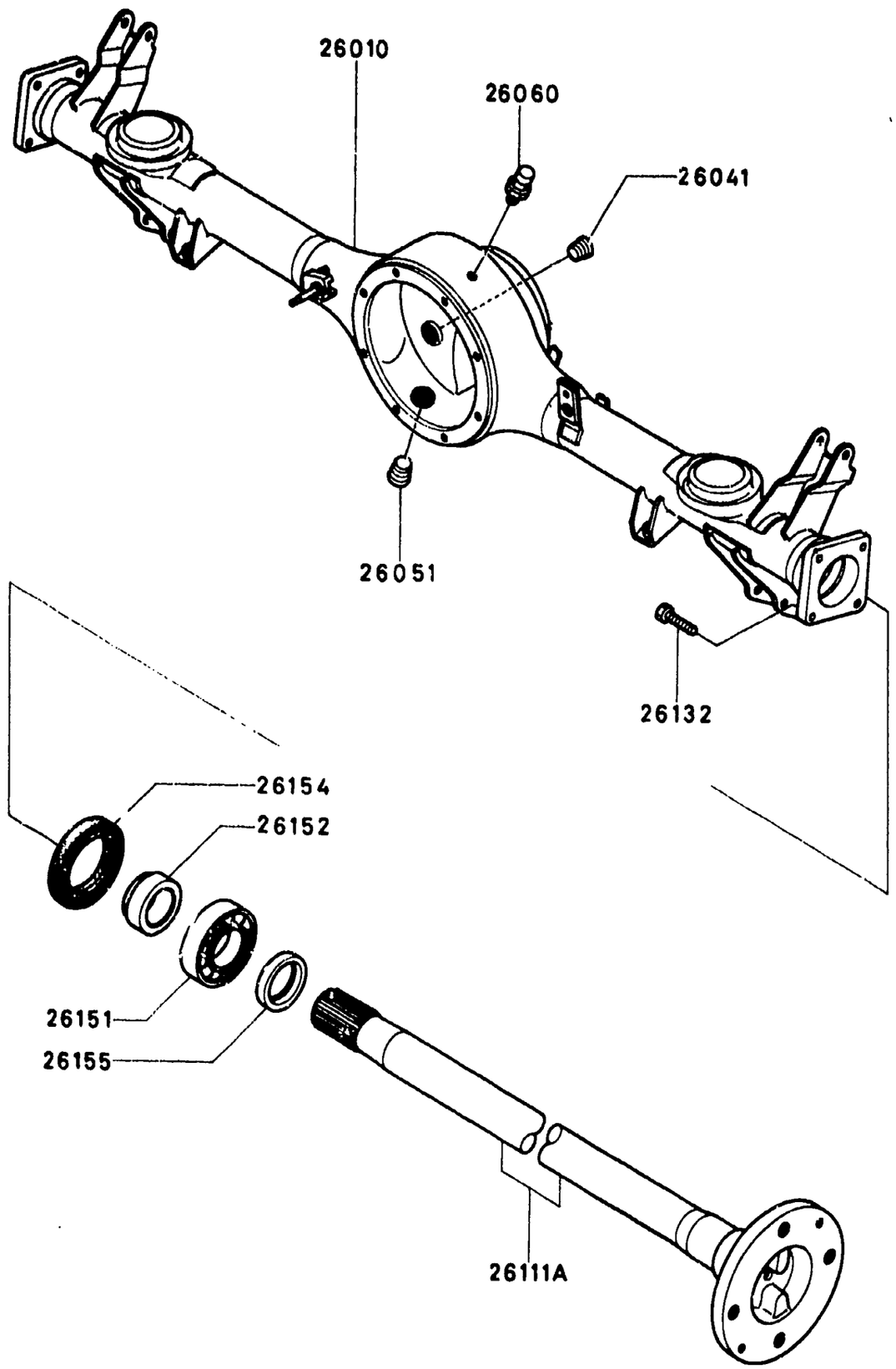

2600A-1* REAR AXLE

D-CODE (Key No.)	PART NAME	PART No.	Qty.	MODEL/DESCRIPTION	VIN (Chassis No.)
26010	CASING,REAR AXLE PONT ARRIERE CAJA PARA EJES TRASEROS	8871-26-020C	1		
26041	PLUG,OIL LEVEL CAROTTE D'HUILE TAPON NIVEL DE ACEITE	0259-26-041A	1		
26051	PLUG,MAGNET DRAIN BOUCHON DE VIDANGE AIMANT TAPON MAGNETICO DE DRENAJ	0259-26-051	1		
26060	BREATHER BOUCHON RESPIRADOR	0866-26-060	1		
26111A	SHAFT,REAR AXLE AXE ROUE ARR.	8871-26-111A	2		
26132	BOLT BOULON,FIXATION ROULEMENT PERNO,RETEN DE COJINETE	0259-26-132	8		
26151	BEARING ROULEMENT RODAMIENTO	8871-26-151	2		SA22C .. 500001 -563260
	<A>	8871-26-151A	2		SA22C .. 563261-
26152	COLLAR,BEARING BAGUE DE ROULEMENT	8531-26-152	2		
26154	SEAL,OIL ARRET D'HUILE RETEN,ACEITE	0187-26-154	2		
26155	SPACER,BEARING ENTRETOISE DE ROULEMENT ESPACIADOR,COJINETE	0259-26-155	2		

2610A REAR BRAKES

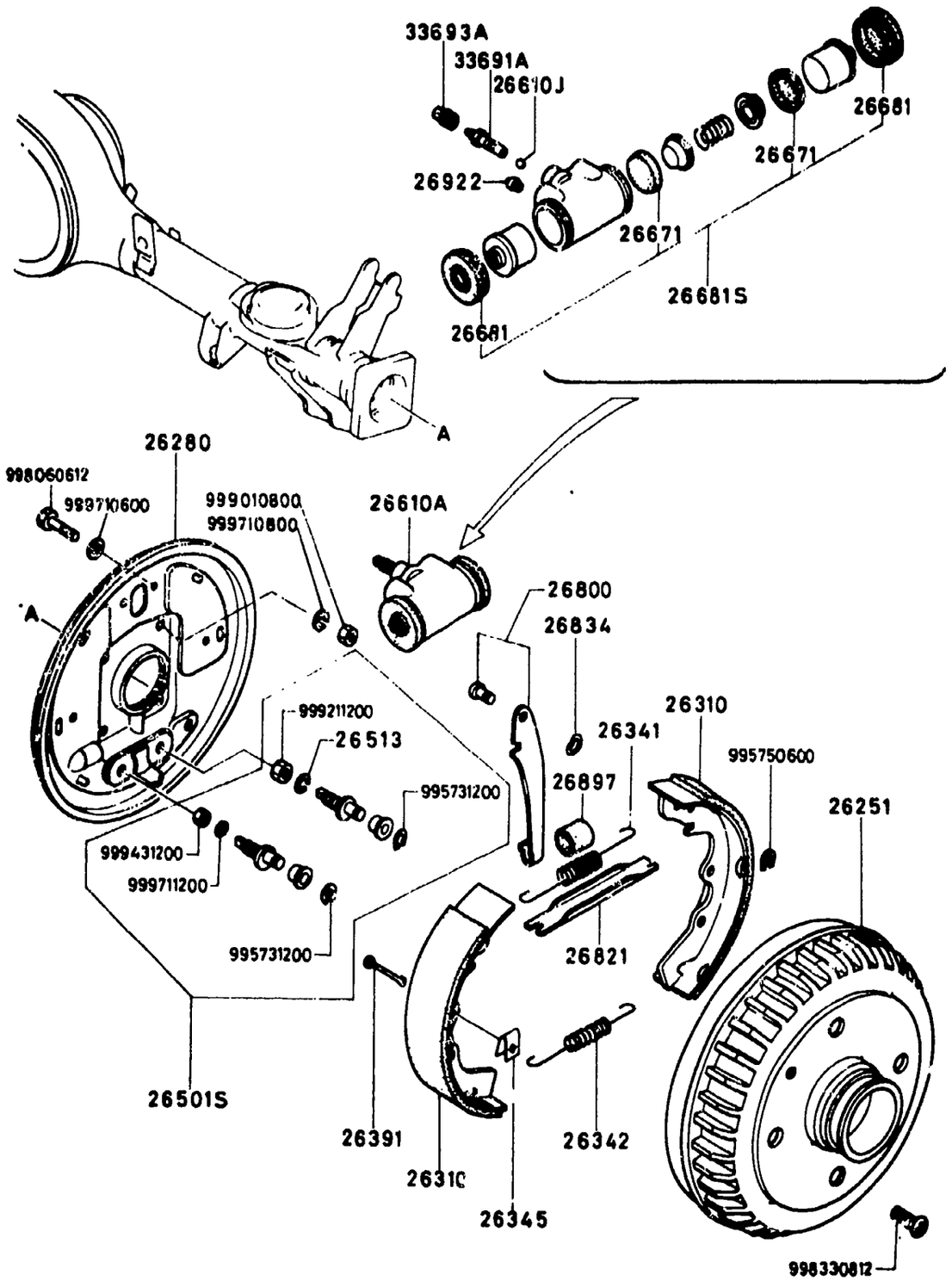

2610A-1 REAR BRAKES

D-CODE (Key No.)	PART NAME	PART No.	Qty.	MODEL/DESCRIPTION	VIN (Chassis No.)
26251	DRUM,BRAKE TAMBOUR DE FREIN TAMBOR DEL FRENO	8871-26-251B	2		SA22C .. 500001 -554324
		8872-26-251A	2		SA22C .. 554325 -578960
		8940-26-251A	2		SA22C .. 578961-
26280	PLATE(R),BRAKE BACK FLASQUE (D), FREIN PLACA DER. FRENO TRASERA	8531-26-280D	1		SA22C .. 554325-
		8569-26-280C	1		SA22C .. 500001 -554324
26280	PLATE(L),BRAKE BACK FLASQUE (G), FREIN ARR PLACA IZQ. FRENO TRASERO	8531-26-290D	1		SA22C .. 554325-
		8569-26-290C	1		SA22C .. 500001 -554324
26310	SHOE,BRAKE MACHOIRE DE FREIN ZAPATA,FRENO	3960-26-310	4		
26341	SPRING,RETURN-UPPER RESSORT DE RAPPEL SUPERIE RESORTE,RETORNO-SUPERIOR	0187-26-341	2		
26342	SPRING,RETURN-LOWER RESSORT DE RAPPEL INFERIE RESORTE,RETORNO-INFERIOR	0118-26-342	2		
26345	SPRING,BRAKE SHOE RESSORT, MACHOIRE DE FREI RESORTE,ZAPATA DE FRENO	0110-26-345	4		
26391	PIN,BRAKE SHOE CLAVETTE, MACHOIRE DE FRE PASADOR ZAPATA FRENO	0187-33-391A	4		
26501S	ANCHOR PIN SET. JEU AXE & RONDELLES FIXAT	8531-99-331	2		SA22C .. 500001 -508586
		8531-99-331A	2		SA22C .. 508587-
26513	WASHER,SPRING RONDELLE GROWER ARANDELA,MUELLE	0118-33-513	2		

2610A REAR BRAKES

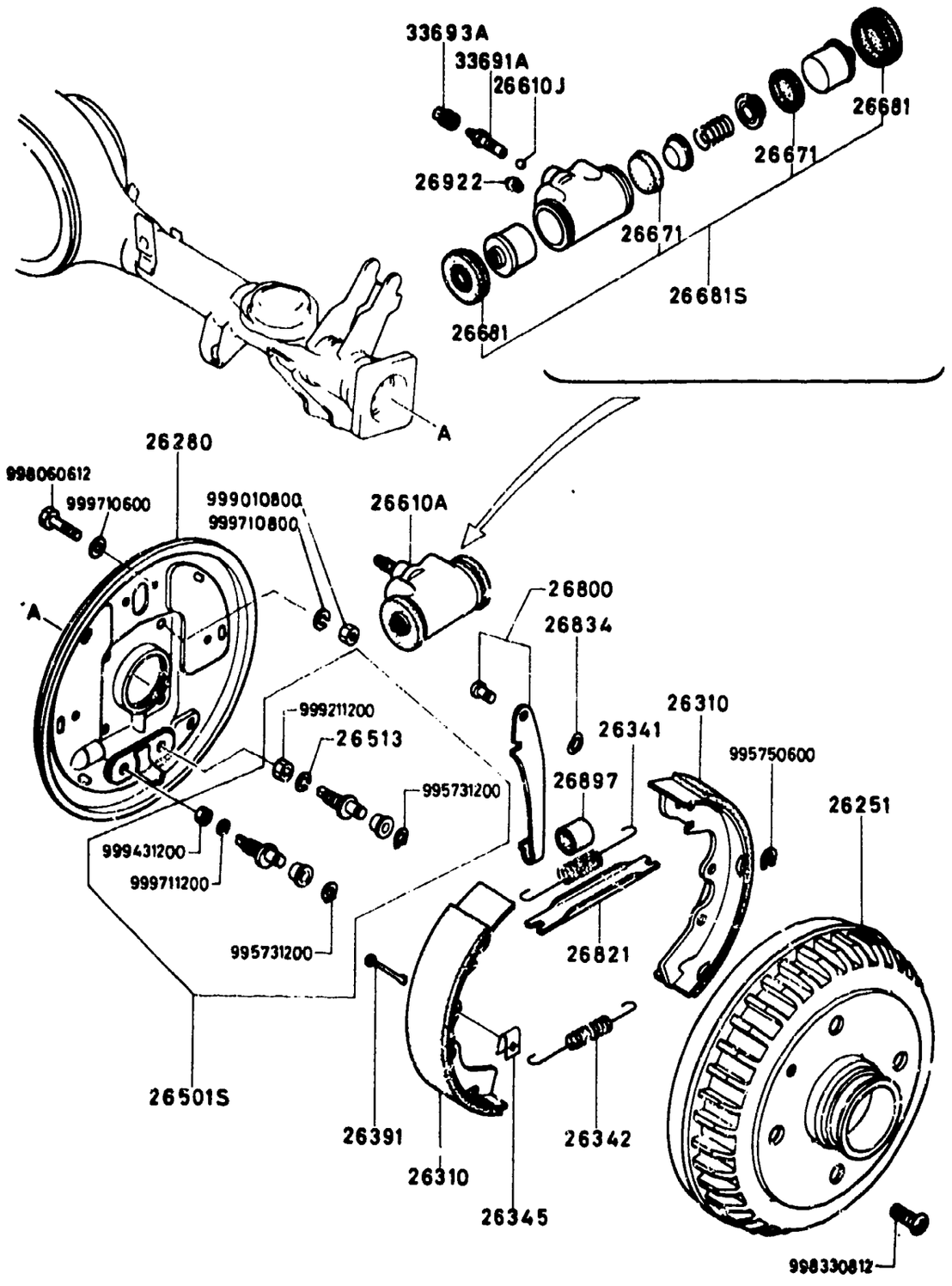

2610A-2* REAR BRAKES

D-CODE (Key No.)	PART NAME	PART No.	Qty.	MODEL/DESCRIPTION	VIN (Chassis No.)
26610A	CYLINDER(R),WHEEL CYLINDRE RECEPTEUR, ROUE CYLINDRO FRENOS RUEDA DER	8531-26-610	1		
26610A	CYLINDER(L),WHEEL CYLINDRE RECEPTEUR, ROUE CILINDRO FRENOS RUEDA IZQ	8565-26-710	1		
26610J	BALL,STEEL BILLE D'ACIER BILLE D'ACIER	9961-11-500	1	(RIGHT SIDE)	
26671	CUP,PISTON COUPELLE, PISTON COPA DEL PISTON	0208-26-671	4		
26681	BOOT COIFFE FUNDA	0613-33-681	4		
26681S	BOOT SET JEU CACHES	0701-89-334	1		
26800	LEVER(R),OPERATING LEVIER DE COMMANDE (D) PALANCA DERECHA DE OPERAC	0305-26-800A	1		
26800	LEVER(L),OPERATING LEVIER DE COMMANDE (G) PALANCA IZQUIERDA DE OPER	0305-26-810A	1		
26821	STRUT(R),OPERATING TIGE DE COMMANDE MALE VARILLA DE EMPUJE-MACHO	0187-26-921	1		
26821	STRUT(L),OPERATING AXE DE REGLAGE(G)	0187-26-821	1		
26834	WASHER,WAVE RONDELLE BOMBEE ARANDELA,ONDULADA	0118-26-834	2		
26897	HOLDER SUPPORT	0118-26-897	2		
26922	SEAT,TUBE NIPPLE, TUYAU HUILE ASIENTO,TUBO	0613-26-922	3	(RH...1 LH...2)	
33691A	SCREW,BLEEDER VIS DE PURGE TORNILLO,PURGADOR	0259-33-691	2	(RIGHT SIDE)	
33693A	CAP,BLEEDER SCREW BOUCHON PURGEUR	0259-33-693	1	(RIGHT SIDE)	

SECTION NUMBER INDEX (CHASSIS)

STARTING LOCATION	SECTION No.	SECTION NAME
2–C2	2500A	PROPELLER SHAFT
2–D2	2600A	REAR AXLE
2–E2	2610A	REAR BRAKES
2–C3	2700A	DIFFERENTIAL
2–F3	2800A	REAR SUSPENSION
2–C4	3200A	STEERING WHEEL
2–F4	3210A	STEERING GEAR & COLUMN
2–H4	3230A	STEERING LINKAGE
2–C5	3300A	FRONT AXLE & BRAKES
2–H5	3400A	FRONT SUSPENSION
2–K5	3410A	CROSSMEMBER & STABILIZER
2–C6	3700A	TIRE & JACK
2–G6	3900A	ENGINE & T/MISSION MOUNTINGS
2–C7	4000A	EX. SYSTEM
2–C8	4140A	CLUTCH RELEASE & MASTER CYLINDERS (MANUAL)
2–E8	4160A	ACCELERATOR CONTROLS
2–F8	4200A	FUEL TANK
2–C9	4300A	CLUTCH & BRAKE
2–E9	4340A	TANDEM MASTER CYLINDER & VACUUM POWER ASSIST SYSTEM
2–H9	4360A	BRAKE PIPINGS
2–C10	4400A	PARKING BRAKE SYSTEM
2–E10	4500A	FUEL & EVAPORATION PIPINGS
2–H10	4600A	CHANGE CONTROLS (AUTOMATIC)

THE FRAMES IN THIS COLUMN INDICATE :

2---C3 2700A DIFFERENTIAL
2---F3 2800A REAR SUSPENSION

© 1983 Toyo Kogyo Co., Ltd.
MAY 1983

2700A DIFFERENTIAL

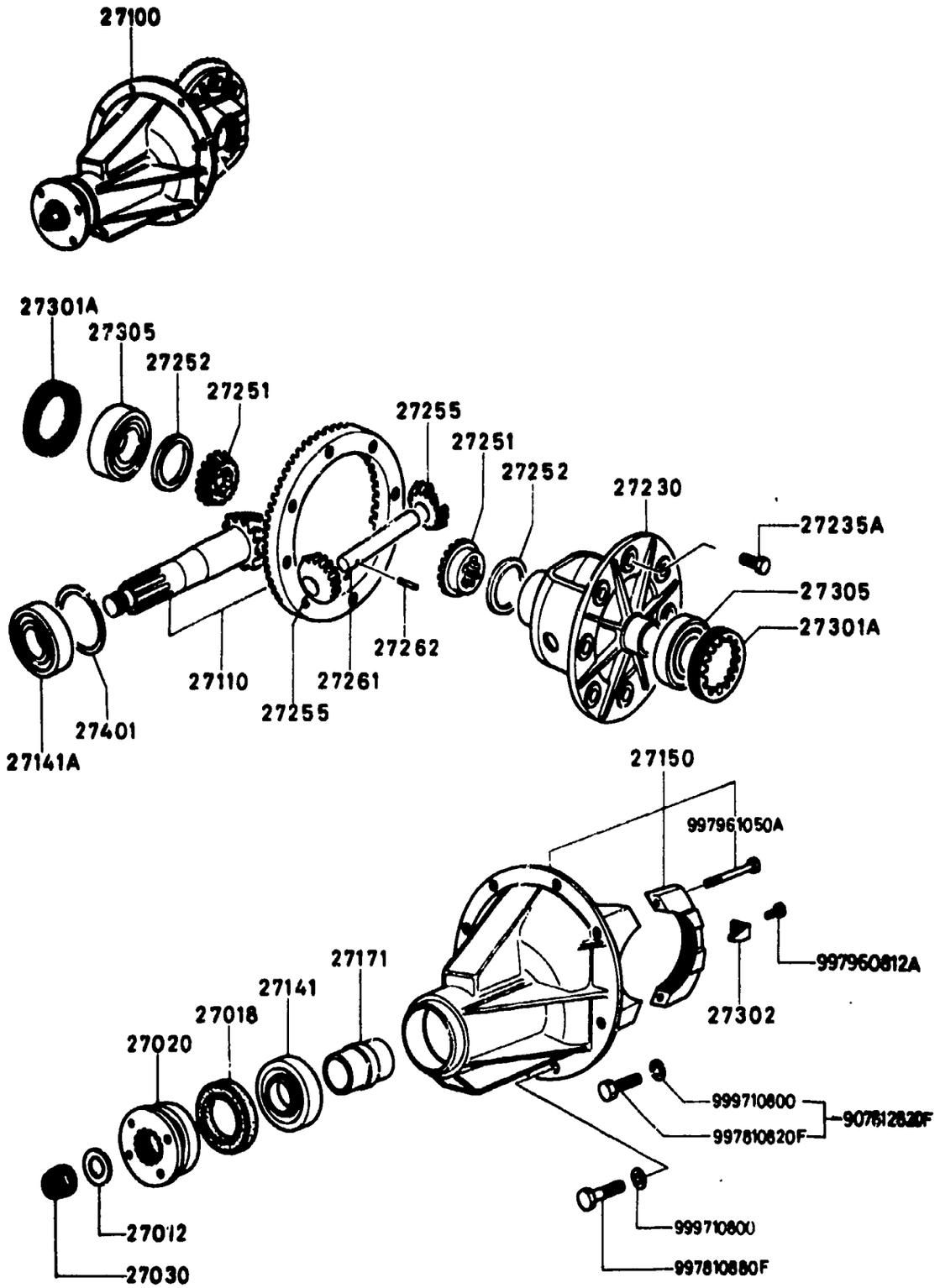

2700A-1 DIFFERENTIAL

D-CODE (Key No.)	PART NAME	PART No.	Qty.	MODEL/DESCRIPTION	VIN (Chassis No.)
27012	WASHER RONDELLE ARANDELA	0223-27-012	1		
27018	SEAL,OIL ARRET D'HUILE RETEN,ACEITE	0223-27-018	1		
27020	FLANGE,COMPANION BRIDE BRIDA,ACOMPANAMIENTO	0223-27-020B	1		
27030	NUT,LOCK ECROU DE SERRAGE TUERCA,SEGURO	0223-27-030	1		
27100	DRIVING & DIFF. CARTER PONT AV. ASSEMBLE TRANSMISION & DIFERENCIAL	8051-27-100B	1		SA22C .. 500001 -511636
	<A >	8051-27-100C	1		SA22C .. 522952-
		8871-27-100	1		SA22C .. 511637 -522951
27110	GEAR SET,FINAL COUPLE CONIQUE JUEGO ENGRANAJE, FINAL	8051-27-110B	1		SA22C .. 500001 -511636
	<A >	8051-27-110C	1		SA22C .. 522952-
		8871-27-110	1		SA22C .. 511637 -522951
27141	BEARING,PINION-FRONT ROULEMENT (AV.),PIGNON RODAMIENTO (DEL) PINON	0755-27-141	1		SA22C .. 554325-
		8051-27-142	1		SA22C .. 500001 -554324
27141A	BEARING,PINION-REAR ROULEMENT (ARR.),PIGNON RODAMIENTO (TRAS) PINON	0221-27-141	1		
27150	CARRIER,DIFFERENTIAL DIFFERENTIEL, SUPPORT PORTADOR DE DIFERENCIAL	0820-27-150B	1		SA22C .. 500001 -571155
		0820-27-150C	1		SA22C .. 571157-
27171	PIECE,DISTANCE	0305-27-171	1		

2700A DIFFERENTIAL

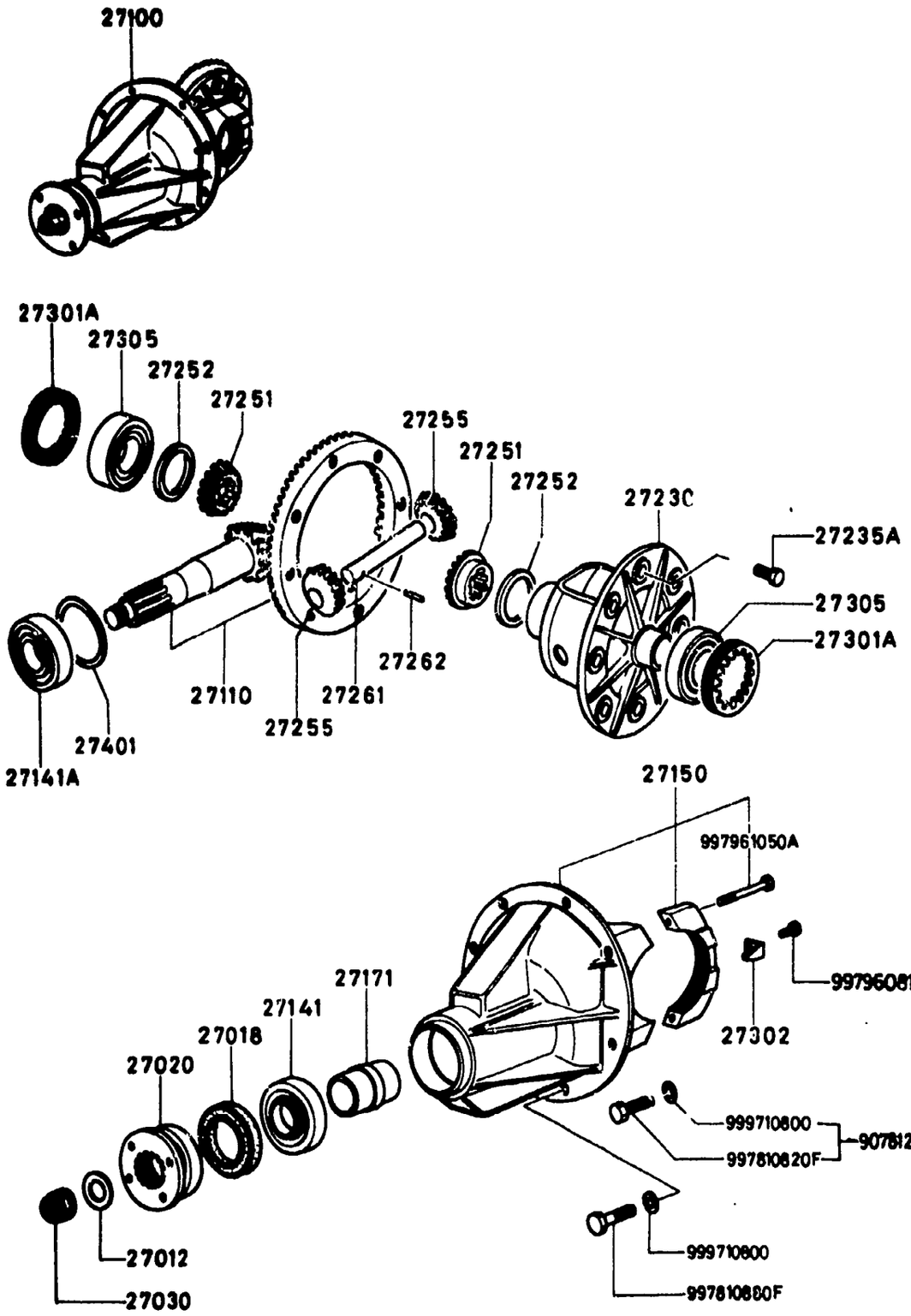

D-CODE (Key No.)	PART NAME	PART No.	Qty.	MODEL/DESCRIPTION	VIN (Chassis No.)
27171 CONT'D	BUSELURE DE SEPARATION SEPARADOR	0305-27-171			
27230	CASE BOITIER RECIPTENTE	0290-27-231B	1		
27235A	BOLT,REAMER BOULON PERNO,ESCARIADOR	8051-27-235	10	(SELECT)	SA22C .. 531149-
		8051-27-236	10	(SELECT)	SA22C .. 531149-
		9975-42-1022	10	(SELECT)	SA22C .. 500001 -531148
		9975-46-1022	10	(SELECT)	SA22C .. 500001 -531148
27251	GEAR,DIFF.SIDE PIGNON PLANETAIRE ENGRANAJE, LATERAL DIF.	0820-27-251A	2		
27252	WASHER RONDELLE ARANDELA	0290-27-252	2	(T=2.00)	
		0290-27-253	2	(T=2.10)	
		0290-27-254	2	(T=2.20)	
		0290-27-256	2	(T=2.05)	
		0290-27-259	2	(T=2.15)	
27255	PINION,DIFFERENTIAL PIGNON DE DIFFERENTIEL PINON, DIFERENCIAL	0221-27-255B	2		SA22C .. 500001 -580113
	<A>	0221-27-255C	2		SA22C .. 580114-
27261	SHAFT,DIFF. PINION AXE, COUPLE CONIQUE EJE,PINON DIFERENCIAL	0305-27-261	1		
27262	PIN CLAVETTE	0114-27-262	1		

2700A DIFFERENTIAL

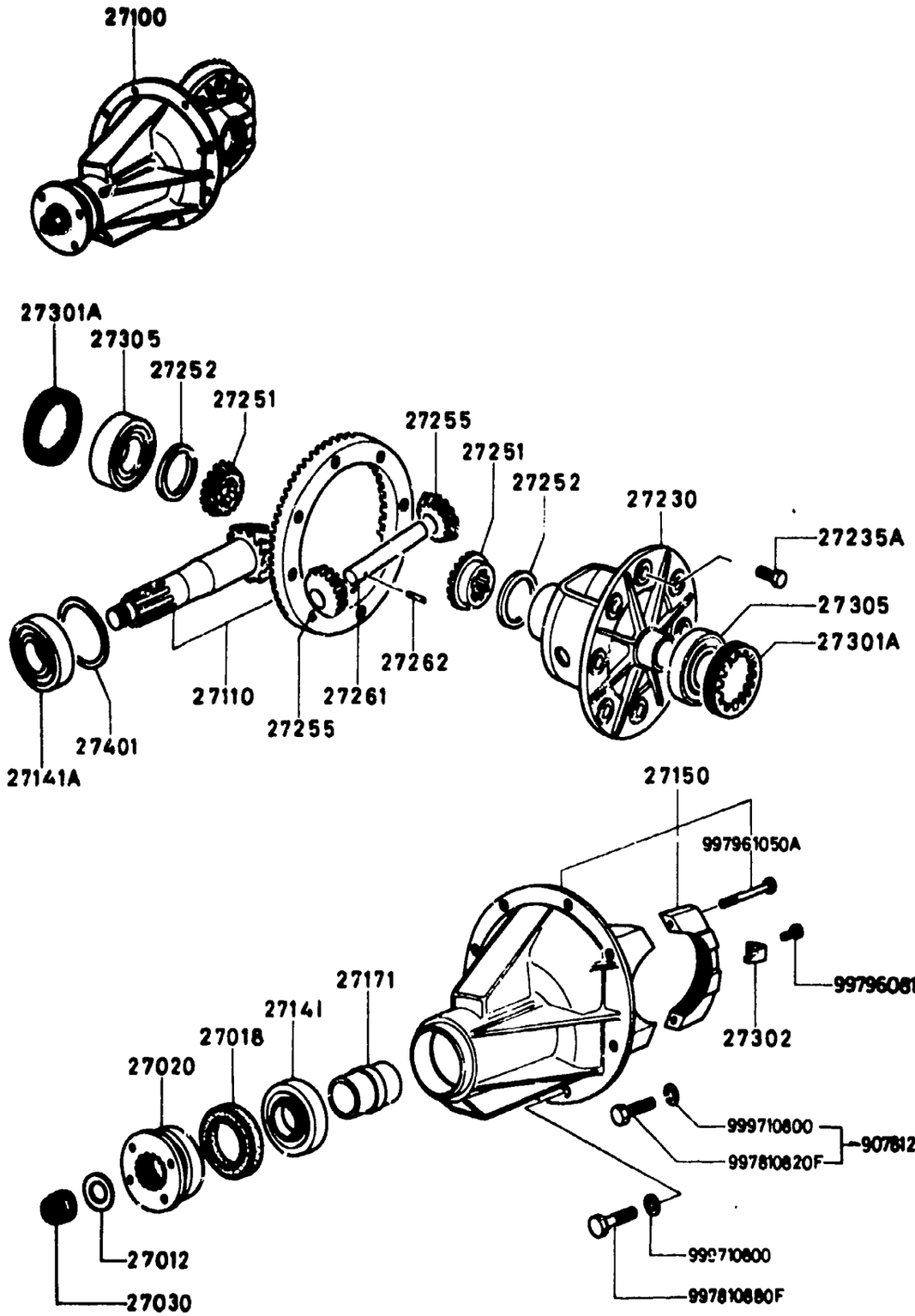

2700A-3★ DIFFERENTIAL

D-CODE (Key No.)	PART NAME	PART No.	Qty.	MODEL/DESCRIPTION	VIN (Chassis No.)
27262 CONT' D	PASADOR	0114-27-262			
27301A	SCREW,ADJUST VIS DE REGLAGE TORNILLO,AJUSTE	0290-27-301	2		
27302	PLATE,LOCK PLAQUE DE FIXATION PLACA - CIERRE	0290-27-302	2		
27305	BEARING ROULEMENT RODAMIENTO	0221-27-305A	2		
27401	SPACER RONDELLE ESPACIADOR	0223-27-401A	1	(T=3.08)	
		0223-27-402A	1	(T=3.11)	
		0223-27-403A	1	(T=3.14)	
		0223-27-404A	1	(T=3.17)	
		0223-27-405A	1	(T=3.20)	
		0223-27-406A	1	(T=3.23)	
		0223-27-407A	1	(T=3.26)	
		0223-27-408A	1	(T=3.29)	
		0223-27-409A	1	(T=3.32)	
		0223-27-411A	1	(T=3.35)	
		0223-27-412A	1	(T=3.38)	
		0223-27-413A	1	(T=3.41)	
		0223-27-414A	1	(T=3.44)	
		0223-27-415A	1	(T=3.47)	

2800A REAR SUSPENSION

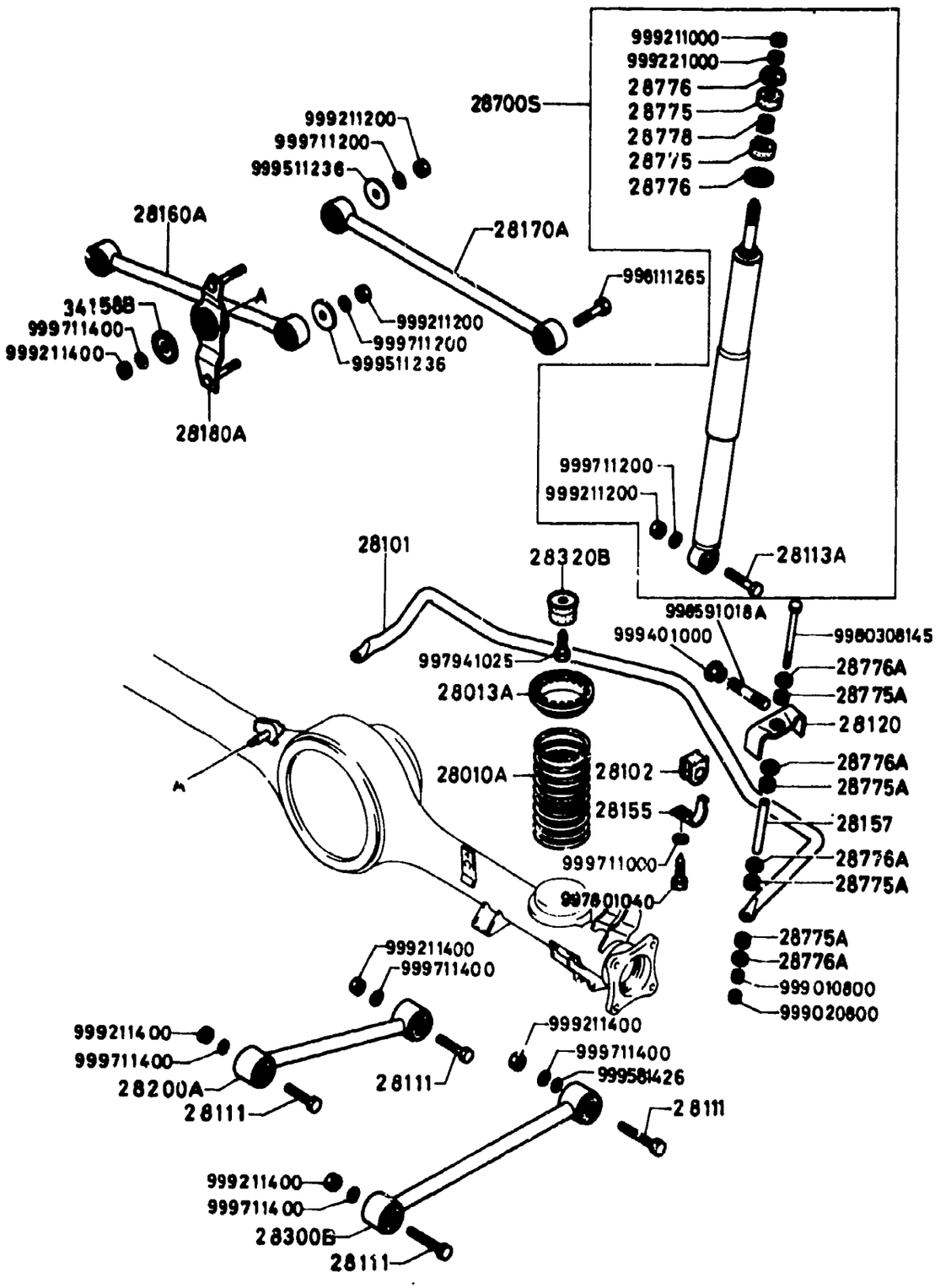

2800A-1 REAR SUSPENSION

D-CODE (Key No.)	PART NAME	PART No.	Qty.	MODEL/DESCRIPTION	VIN (Chassis No.)
28010A	SPRING,COIL RESSORT, HELICOIDAL RESORTE,ESPIRAL	8871-28-011	2		SA22C .. 500001 -505155
		8871-28-011B	2		SA22C .. 505156-
28013A	SEAT,RUBBER SIEGE, C.T.C. ASIENTO,GOMA	8871-28-013	2		SA22C .. 500001 -505155
	<A >	8871-28-013A	2		SA22C .. 505156 -583526
	<A >	8871-28-013B	2		SA22C .. 583527-
28101	STABILIZER STABILISATEUR ESTABILIZADOR	8871-28-151A	1	(18MM) (0.71INCH)	
		8980-28-151	1	(16MM) (0.63INCH)	SA22C .. 568501-
28102	BUSH,RUBBER BUSELURE CTC BUJE,GOMA	8173-28-156	2	(FOR 16MM STABILIZER	SA22C .. 568530 -583526
		8871-28-156	2	(FOR 18MM STABILIZER	
		8980-28-156	2	(FOR 16MM STABILIZER	SA22C .. 583527-
28111	BOLT BOULON PERNO	0305-28-111B	8		
28113A	BOLT BOULON PERNO	1243-28-111	2		
28120	BRKT.,CONTROL LINK SUPPORT	8871-28-120B	2		
28155	BRKT.,STAB. SUPPORT SUPPORT	8871-28-155	2		
28157	SPACER, STAB EPAISSEUR	8871-28-157	2		

2800A REAR SUSPENSION

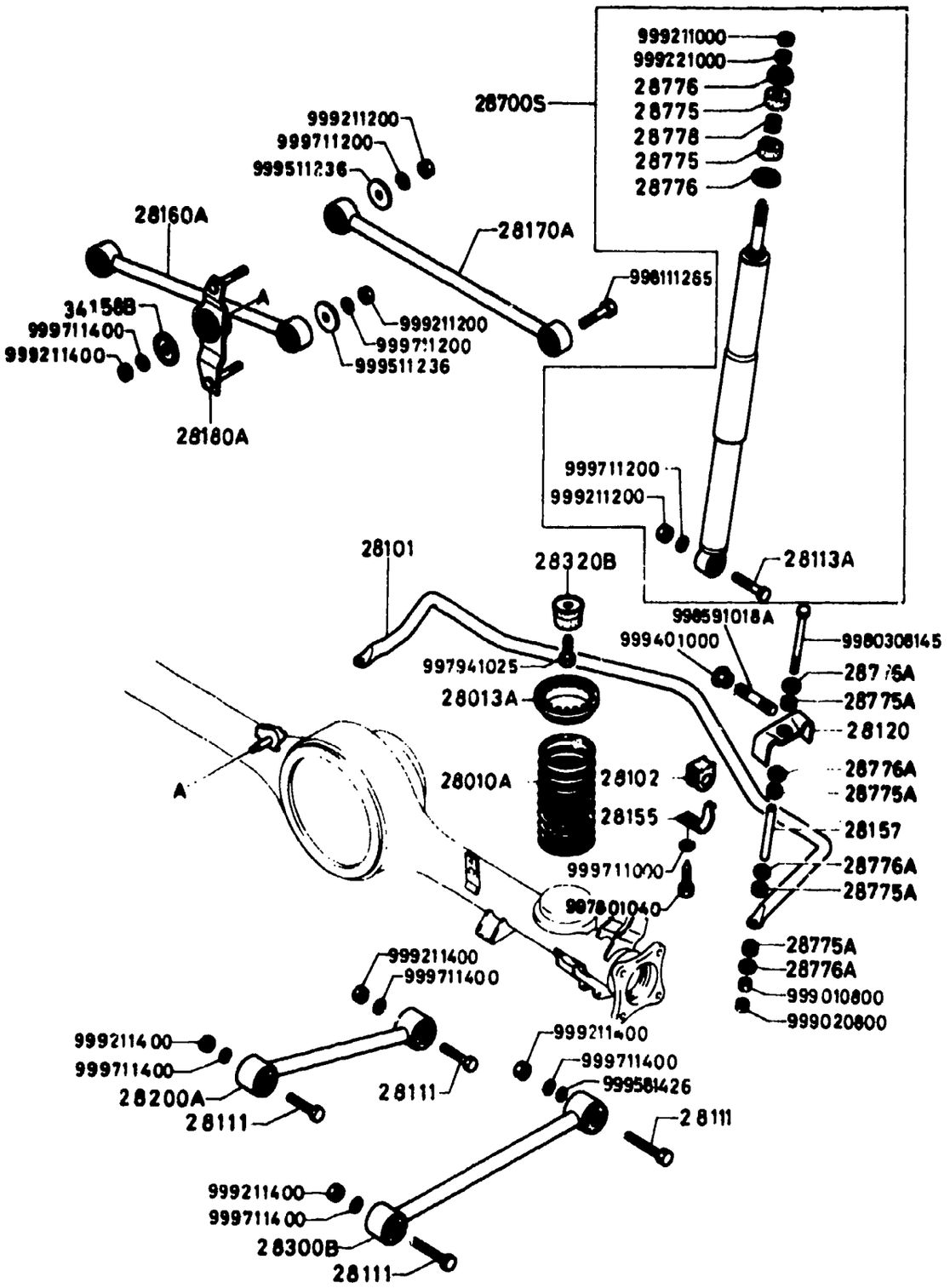

2800A-2* REAR SUSPENSION

D-CODE (Key No.)	PART NAME	PART No.	Qty.	MODEL/DESCRIPTION	VIN (Chassis No.)
28160A	LINK(R),WATT. LEVIER EAU(D)	8871-28-160	1		
28170A	LINK(L),WATT. RACCORD EAU(G)	8871-28-170	1		
28180A	BRKT.,WATT. LINK SUPPORT RACCORD EAU	8871-28-180	1		
28200A	LINK TRINGLE ESLABON	8871-28-200	2		
28300B	LINK,LOWER ARTICULATION INF.	8871-28-300A	2		
28320B	STOPPER,BUMP TAMPON CAOUTCHOUC	8871-28-320	2		
28700S	DAMPER SET,REAR JEU AMORTISSEURS ARR.	8871-99-281	2		
28775	BUSH,RUBBER BUSELURE CTC BUJE,GOMA	8871-28-775	4		
28775A	BUSH,RUBBER-STAB. BUSELURE CAOUTCHOUC STAB.	0710-28-775	8		
28776	RETAINER ARRET RETENTOR	0223-28-776	4		
28776A	RETAINER,STAB. RONDELLE	0710-28-776	8		
28778	GROMMET PROTECTEUR ANILLO PROTECTOR	0259-28-778	2		
34158B	WASHER RONDELLE ARANDELA	0866-34-158	1		

SECTION NUMBER INDEX (CHASSIS)

STARTING LOCATION	SECTION No.	SECTION NAME
2–C2	2500A	PROPELLER SHAFT
2–D2	2600A	REAR AXLE
2–E2	2610A	REAR BRAKES
2–C3	2700A	DIFFERENTIAL
2–F3	2800A	REAR SUSPENSION
2–C4	3200A	STEERING WHEEL
2–F4	3210A	STEERING GEAR & COLUMN
2–H4	3230A	STEERING LINKAGE
2–C5	3300A	FRONT AXLE & BRAKES
2–H5	3400A	FRONT SUSPENSION
2–K5	3410A	CROSSMEMBER & STABILIZER
2–C6	3700A	TIRE & JACK
2–G6	3900A	ENGINE & T/MISSION MOUNTINGS
2–C7	4000A	EX. SYSTEM
2–C8	4140A	CLUTCH RELEASE & MASTER CYLINDERS (MANUAL)
2–E8	4160A	ACCELERATOR CONTROLS
2–F8	4200A	FUEL TANK
2–C9	4300A	CLUTCH & BRAKE
2–E9	4340A	TANDEM MASTER CYLINDER & VACUUM POWER ASSIST SYSTEM
2–H9	4360A	BRAKE PIPINGS
2–C10	4400A	PARKING BRAKE SYSTEM
2–E10	4500A	FUEL & EVAPORATION PIPINGS
2–H10	4600A	CHANGE CONTROLS (AUTOMATIC)

THE FRAMES IN THIS COLUMN INDICATE :

2---C4	3200A	STEERING WHEEL
2---F4	3210A	STEERING GEAR & COLUMN
2---H4	3230A	STEERING LINKAGE

© 1983 Toyo Kogyo Co., Ltd.
MAY 1983

3200A STEERING WHEEL

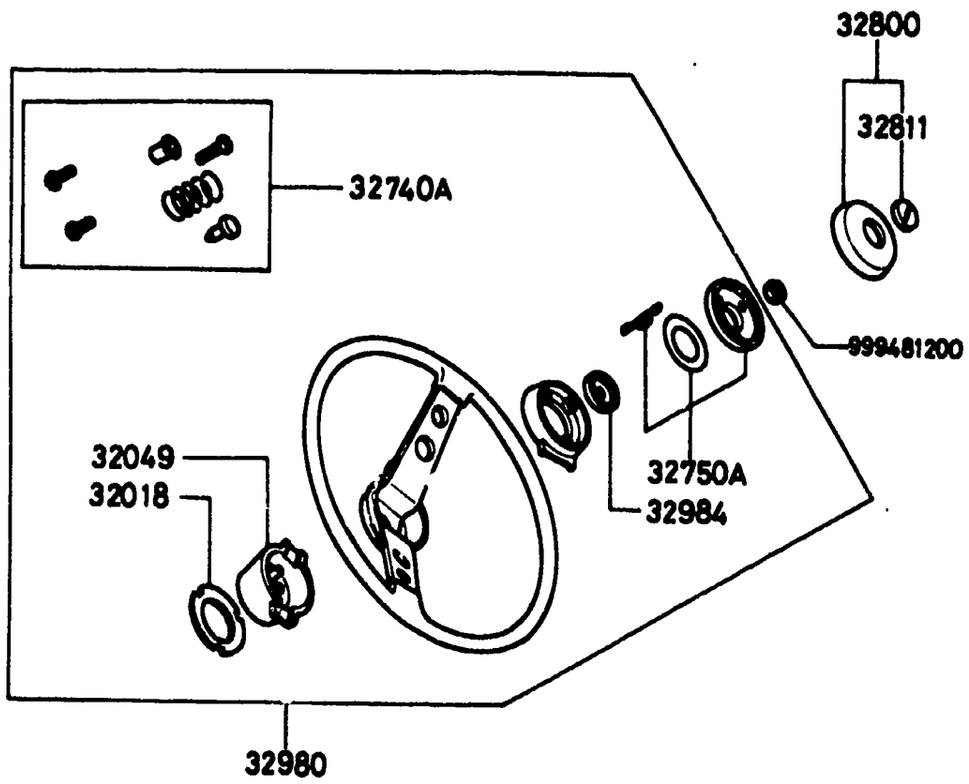

(2-SPOKE)

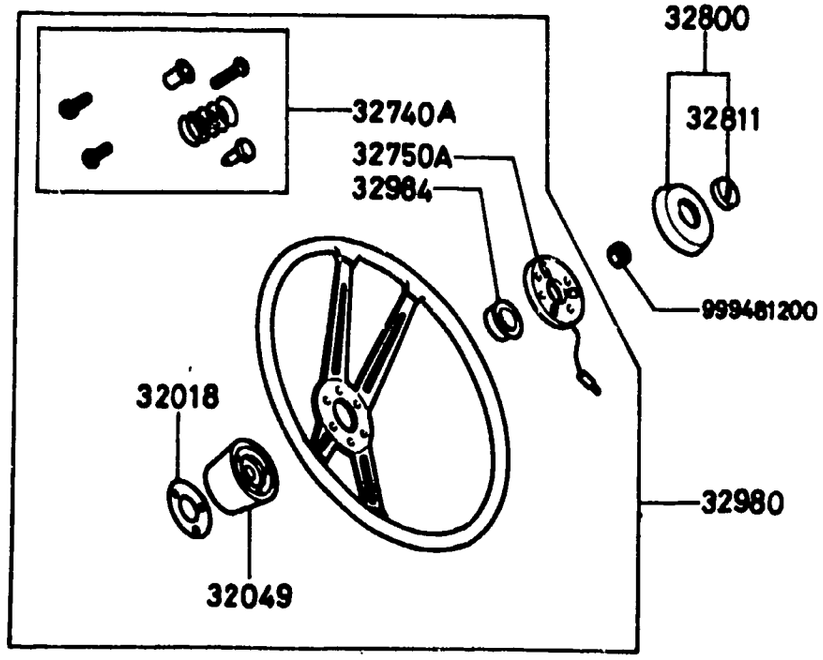

(4-SPOKE)

3200A-1 STEERING WHEEL

D-CODE (Key No.)	PART NAME	PART No.	Qty.	MODEL/DESCRIPTION	VIN (Chassis No.)
32018	TERMINAL BORNE TERMINAL	*8532-32-018	1	(2-SPOKE USE)	SA22C .. 574180-
		*8871-32-018	1	(4-SPOKE USE)	SA22C .. 574180-
32049	COVER,WHEEL CORE	*8532-32-049	1	(2-SPOKE USE)	SA22C .. 574180-
	BLACK	00			
		*8871-32-049	1	(4-SPOKE USE)	SA22C .. 574180-
	BLACK	00			
32740A	SET-SCREW	*8532-32-740	1	(2-SPOKE USE)	SA22C .. 574180-
		*8871-32-740	1	(4-SPOKE USE)	SA22C .. 574180-
32750A	SET-HORN	*8532-32-750	1	(2-SPOKE USE)	SA22C .. 574180-
		*8871-32-750	1	(4-SPOKE USE)	SA22C .. 574180-
32800	CAP,HORN COMMANDE D'AVERTISSEUR, V TAPA DE BOCINA	8531-32-800	1	(2-SPOKE USE)	
	BLACK	01			
		8871-32-800	1	(4-SPOKE USE)	
	BLACK	01			
32811	EMBLEM EMBLEME EMBLEMA	8531-32-811	1		
32980	BOSS,STEERING WHEEL VOLANT SOPORTE CILINDRICO,VOLANT	8180-32-980	1	(LEATHERET) (4-SPOKE)	SA22C .. 574180-
	BLACK	00			
		8344-32-980		(W/LEATHER GRIP) (4-SPOKE)	

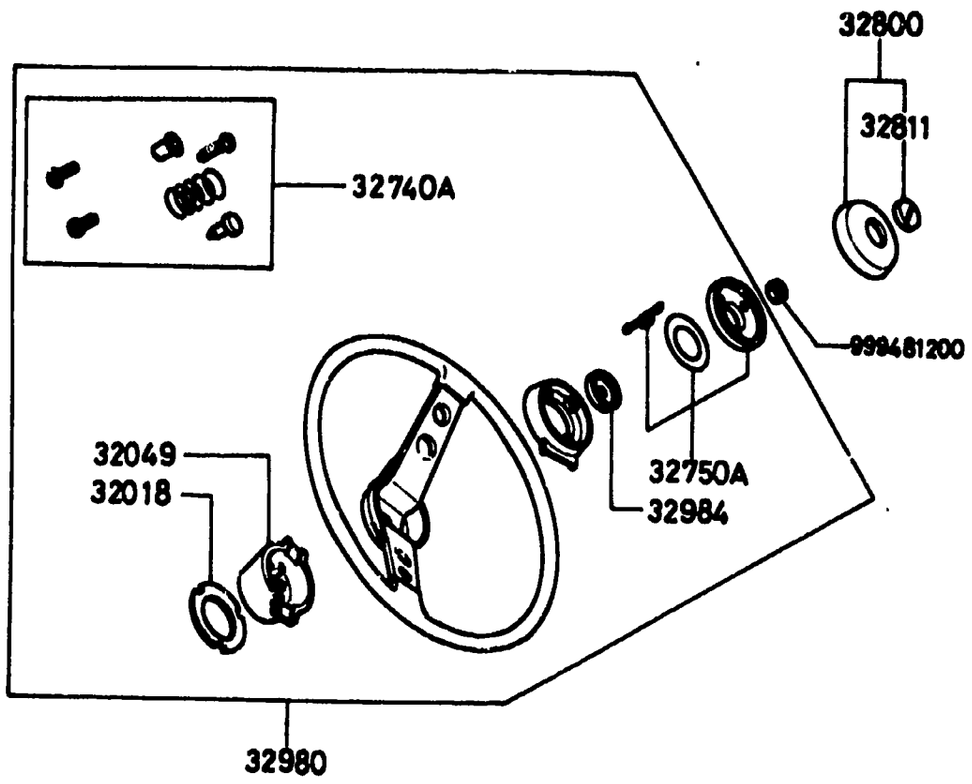

(2-SPOKE)

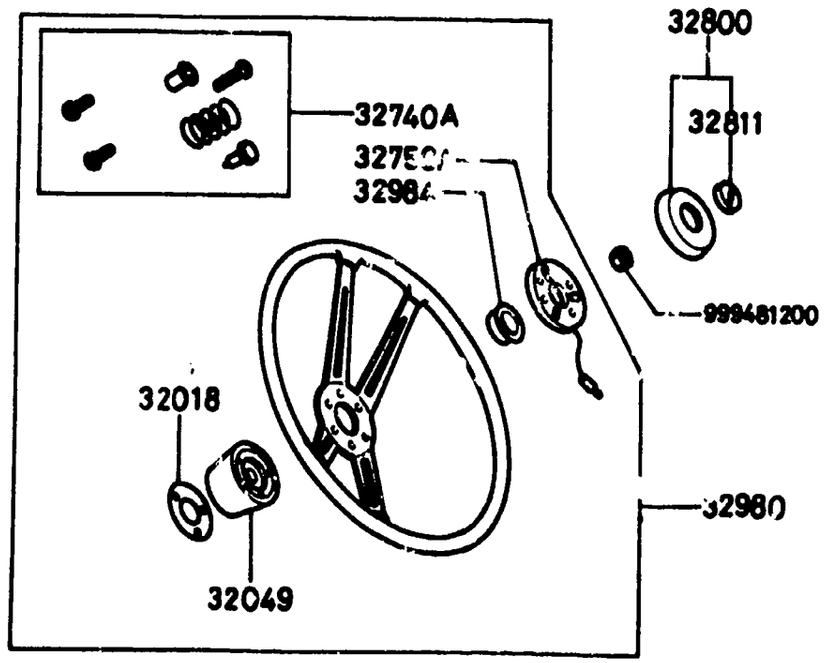

(4-SPOKE)

3200A-2 STEERING WHEEL

D-CODE (Key No.)	PART NAME	PART No.	Qty.	MODEL/DESCRIPTION	VIN (Chassis No.)
32980 CONT'D		8344-32-980	1		SA22C .. 574180-
	BLACK	00			
		8349-32-980		(LEATHERET) (2-SPOKE)	
			1		SA22C .. 574180-
	BLACK	00			
		8532-32-980		(LEATHERET) (2-SPOKE)	
			1		SA22C .. 500001 -522951
	BLACK	00			
	<A>	8532-32-980A		(LEATHERET) (2-SPOKE)	
			1		SA22C .. 522952 -574179
	BLACK	00			
		8571-32-980		(W/LEATHER GRIP) (4-SPOKE)	
			1		SA22C .. 500001 -554324
	BLACK	00			
	<A>	8571-32-980A		(W/LEATHER GRIP) (4-SPOKE)	
			1		SA22C .. 554325 -574179
	BLACK	00			
		8871-32-980		(4-SPOKE, W/LEATHERET)	
			1		SA22C .. 500001 -522951
	BLACK	00			
	<A>	8871-32-980A		(4-SPOKE W/LEATHERET)	
			1		SA22C .. 522952 -574179
	BLACK	00			
32984	SET-CUP	*8532-32-984		(2-SPOKE USE)	
			1		SA22C .. 574180-

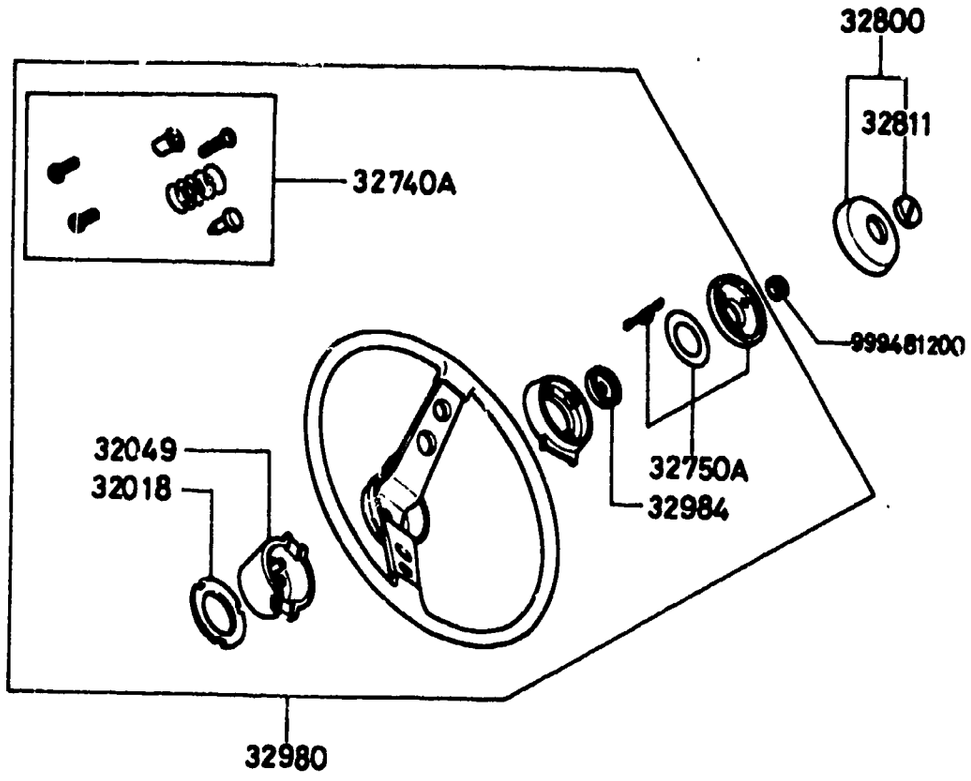

(2-SPOKE)

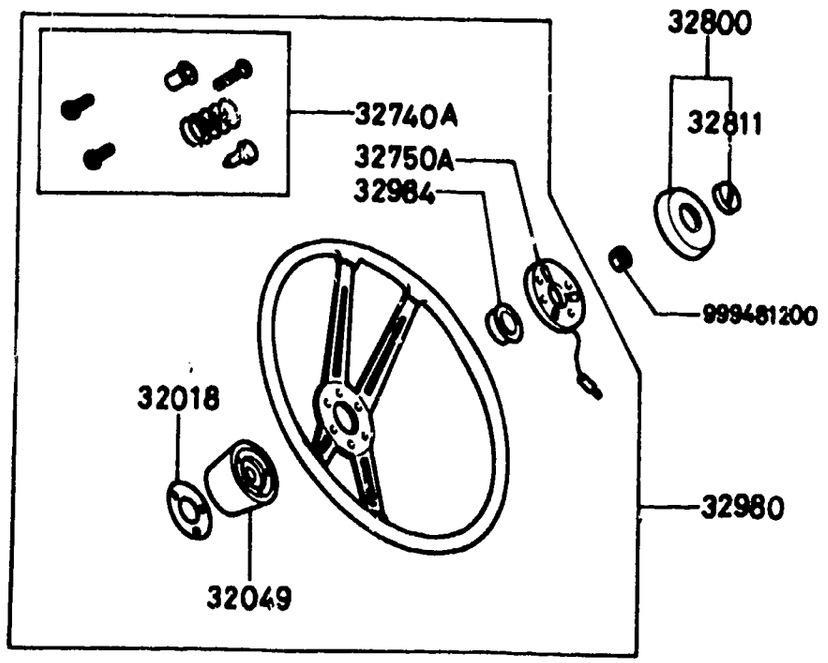

(4-SPOKE)

3200A-3★ STEERING WHEEL

D-CODE (Key No.)	PART NAME	PART No.	Qty.	MODEL/DESCRIPTION	VIN (Chassis No.)
32984 CONT'D		★8871-32-984	1	(4-SPOKE USE)	SA22C .. 574180-

3210A STEERING GEAR & COLUMN

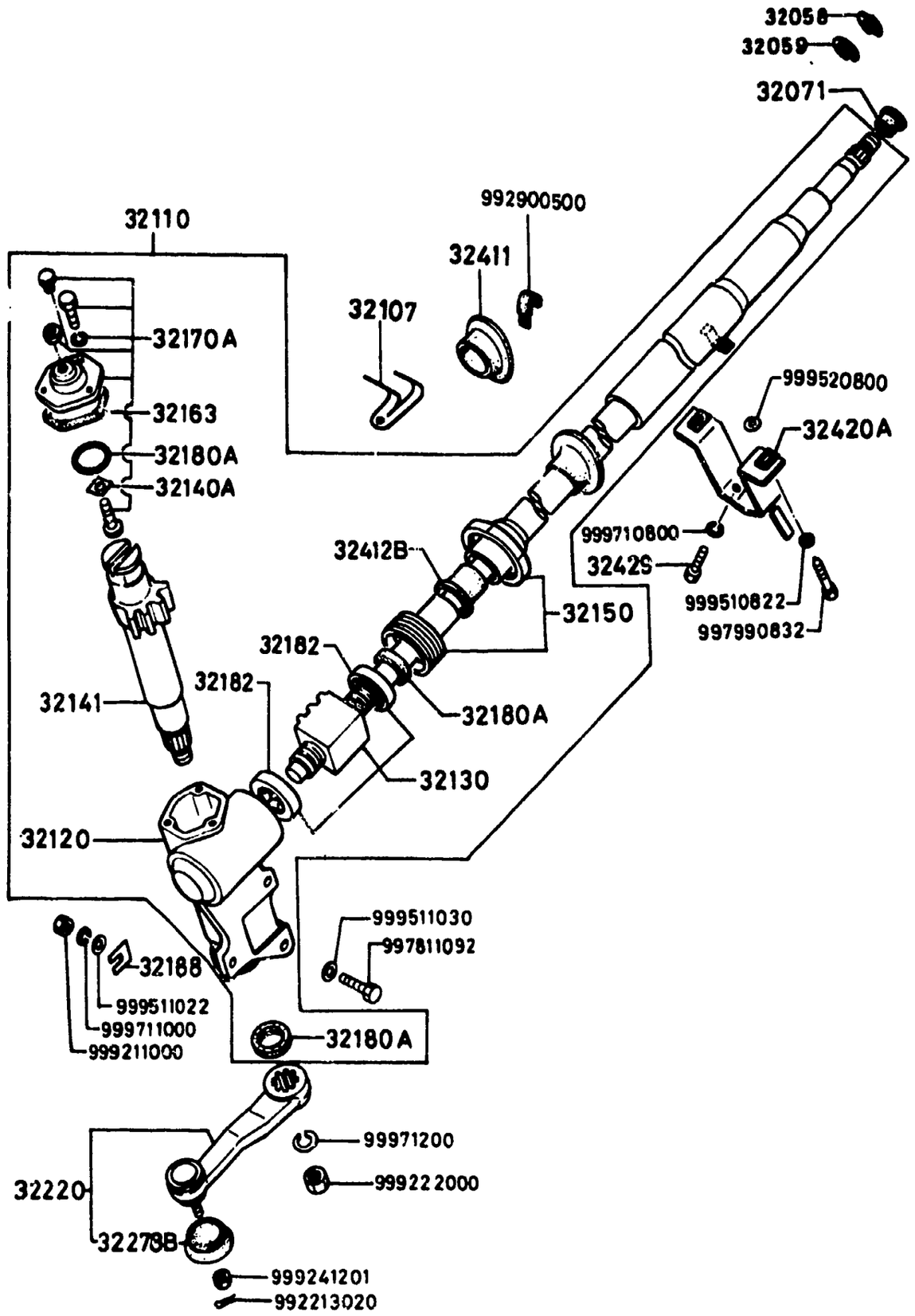

3210A-1 STEERING GEAR & COLUMN

D-CODE (Key No.)	PART NAME	PART No.	Qty.	MODEL/DESCRIPTION	VIN (Chassis No.)
32058	WASHER,STOP RONDELLE D'ARRET	0820-32-058A	1		SA22C .. 500001 -574179
32059	RING,STOP BAGUE D'ARRET ARO,TOPE	0208-32-059	1		SA22C .. 500001 -574179
32071	BUSH BUSELURE BUJE	0259-32-071	1	(ORD. BY 8871-49-101)	SA22C .. 500001 -561876
		8173-32-071	1		SA22C .. 561877-
32107	CLIP ATTACHE PRENSA TRABA GAZA	8871-32-862	1		
32110	GEAR,STEERING MECANISME DE DIRECTION	8340-32-110	1		SA22C .. 574180-
	.	8871-32-110	1		SA22C .. 500001 -574179
32120	HOUSING,GEAR BOITE DE VITESSES CASCO ENGRANAJE	*8871-32-120	1		SA22C .. 574180-
32130	BALL NUT,WORM PIGNON DE DIRECTION TUERCA DE SIN-FIN	*8340-32-130	1		SA22C .. 574180-
32140A	SHIM KIT,ADJUST	*8180-32-140	1		SA22C .. 574180-
32141	SHAFT,SECTOR ARBRE, SECTEUR EJE,SECTOR	*8871-32-141	1		SA22C .. 574180-
32150	COVER KIT,END	*8871-32-150	1		SA22C .. 574180-
32163	GASKET,SIDE COVER JOINT, TRAPPE EMPAQUE, TAPA LATERAL	8871-32-163	1		SA22C .. 500001 -520637
32170A	COVER KIT,SIDE	*8871-32-170	1		SA22C .. 574180-
32180A	SEAL KIT	*8340-32-180	1		SA22C ..

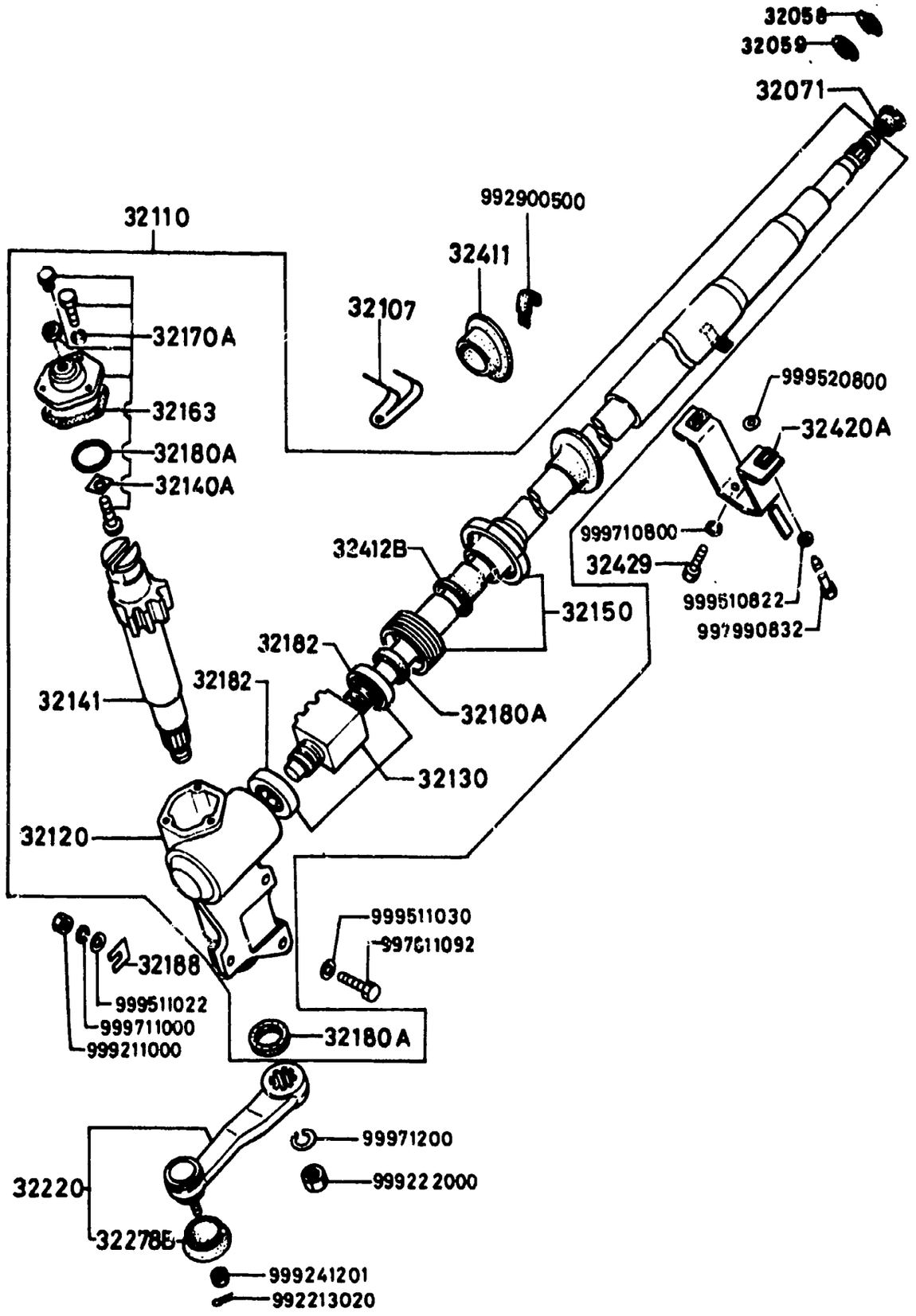

3210A-2* STEERING GEAR & COLUMN

D-CODE (Key No.)	PART NAME	PART No.	Qty.	MODEL/DESCRIPTION	VIN (Chassis No.)
32180A CONT'D		8340-32-180			574180-
32182	BEARING ROULEMENT RODAMIENTO	*8871-32-182	2		SA22C .. 574180-
32188	SHIM,ADJUST EPAISSEUR LAINA,AJUSTE	0208-32-188	2		
32220	ARM,PITMAN BRAS PITMAN BRAZO,PITMAN	1757-32-220	1	79 MODEL	SA22C .. 500001 -568500
	<AN>	1757-32-220A	1	80 MODEL	SA22C .. 568501-
32278B	SEAL,DUST-PITMAN CACHE-POUSSIERE PITMAN	8545-32-278	1		
32411	COVER,DUST	8871-32-411	1		
32412B	BUSH	8871-32-412	1		
32420A	BRACKET,FIXING ATTACHE DE FIXATION	8871-32-420	1		
32429	BOLT BOULON PERNO	8173-32-429	4		SA22C .. 574180 -606774
	<A >	*8871-32-429	4		SA22C .. 606775-

3230A STEERING LINKAGE

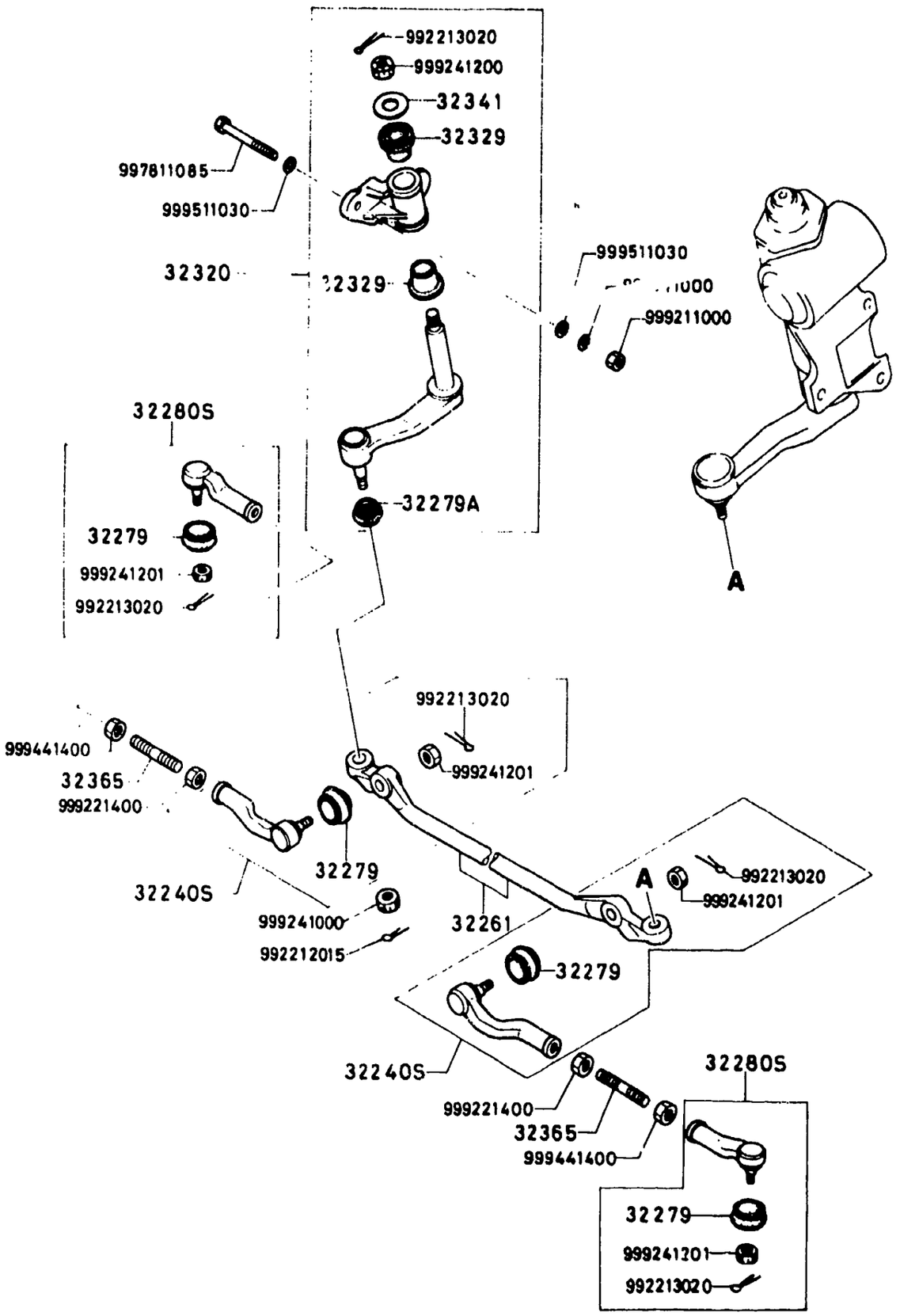

3230A-1* STEERING LINKAGE

D-CODE (Key No.)	PART NAME	PART No.	Qty.	MODEL DESCRIPTION	VIN (Chassis No.)
32240S	JOINT SET,BALL JEU DE ROTULES DIRECTION	8531-99-322	2		SA22C .. 500001 -592559
		8531-99-322A	2		SA22C .. 592560-
32261	LINK.CENTER TRINGLE CENTR. ESLABON CENTRAL	8871-32-261	1		
32279	SEAL,DUST CACHE-POUSSIERE SELLO,POLVO	8021-32-279	4		
32279A	SEAL,DUST CACHE-POUSSIERE SELLO,POLVO	8531-32-279	1		
32280S	JOINT SET,BALL JEU DE ROTULES DIRECTION	8021-99-324	2		
32320	ARM,IDLER BRAS BRAZO,AUXILIAR	8871-32-320	1		
32329	BUSH BALAIS CARBON	0866-32-329B	2		SA22C .. 500001 -526339
		0866-32-329C	2		SA22C .. 526340-
32341	WASHER RONDELLE ARANDELA	0866-32-341	1		
32365	ROD,TIE BARRE D'ACCOUPLEMENT VARILLA,TENSORA	2113-32-365	2		

SECTION NUMBER INDEX (CHASSIS)

STARTING LOCATION	SECTION No.	SECTION NAME
2–C2	2500A	PROPELLER SHAFT
2–D2	2600A	REAR AXLE
2–E2	2610A	REAR BRAKES
2–C3	2700A	DIFFERENTIAL
2–F3	2800A	REAR SUSPENSION
2–C4	3200A	STEERING WHEEL
2–F4	3210A	STEERING GEAR & COLUMN
2–H4	3230A	STEERING LINKAGE
2–C5	3300A	FRONT AXLE & BRAKES
2–H5	3400A	FRONT SUSPENSION
2–K5	3410A	CROSSMEMBER & STABILIZER
2–C6	3700A	TIRE & JACK
2–G6	3900A	ENGINE & T/MISSION MOUNTINGS
2–C7	4000A	EX. SYSTEM
2–C8	4140A	CLUTCH RELEASE & MASTER CYLINDERS (MANUAL)
2–E8	4160A	ACCELERATOR CONTROLS
2–F8	4200A	FUEL TANK
2–C9	4300A	CLUTCH & BRAKE
2–E9	4340A	TANDEM MASTER CYLINDER & VACUUM POWER ASSIST SYSTEM
2–H9	4360A	BRAKE PIPINGS
2–C10	4400A	PARKING BRAKE SYSTEM
2–E10	4500A	FUEL & EVAPORATION PIPINGS
2–H10	4600A	CHANGE CONTROLS (AUTOMATIC)

THE FRAMES IN THIS COLUMN INDICATE :

2---C5	3300A	FRONT AXLE & BRAKES (1979 MODEL)
2---E5	3300AA	FRONT AXLE & BRAKES (1980 MODEL)
2---H5	3400A	FRONT SUSPENSION
2---K5	3410A	CROSSMEMBER & STABILIZER

© 1983 Toyo Kogyo Co., Ltd.
MAY 1983

3300A FRONT AXLE & BRAKES (1979 MODEL)

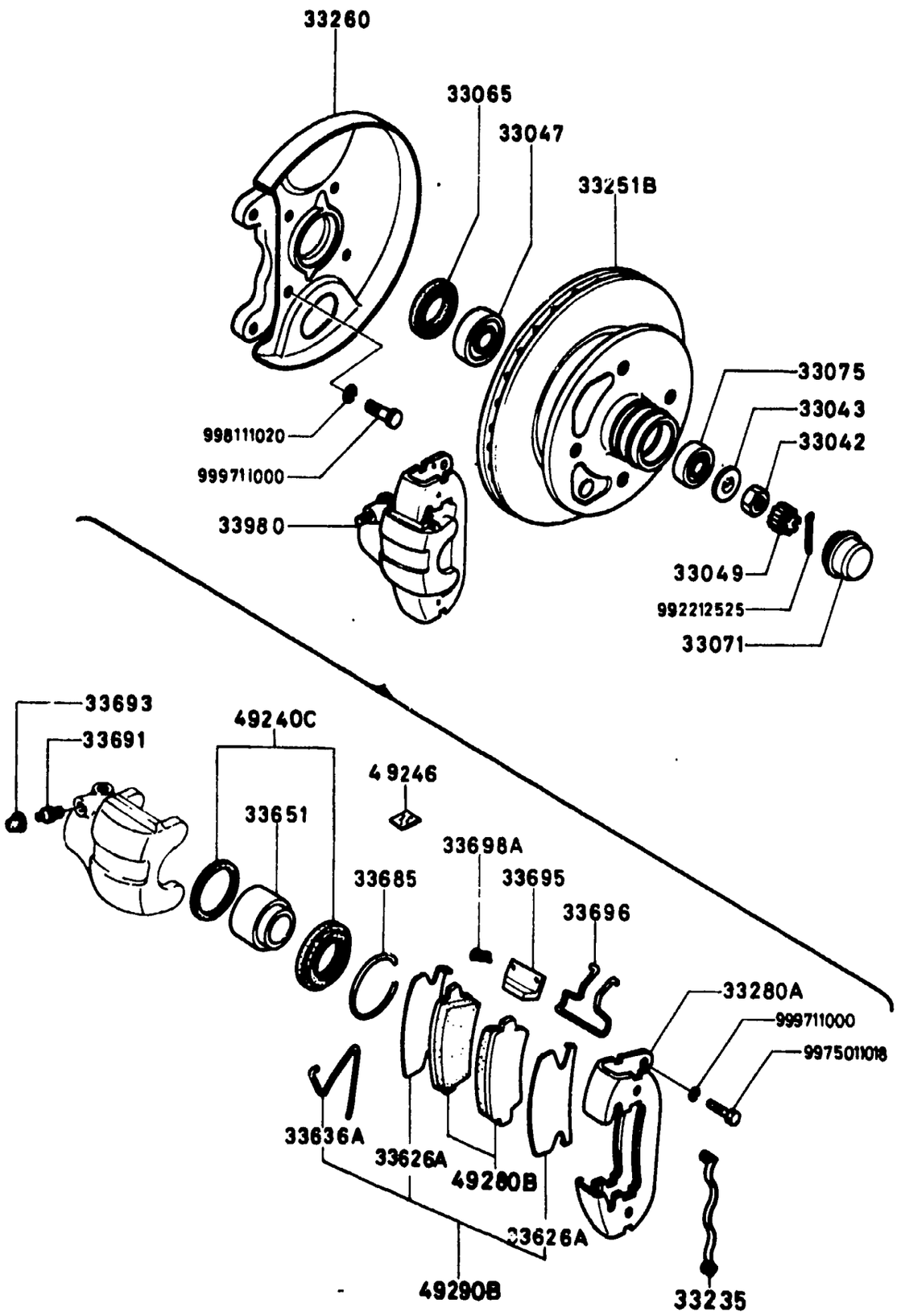

3300A-1 FRONT AXLE & BRAKES (1979 MODEL)

D-CODE (Key No.)	PART NAME	PART No.	Qty.	MODEL/DESCRIPTION	VIN (Chassis No.)
33042	NUT ECROU TUERCA	0259-33-042	2		
33043	WASHER,TAB RONDELLE ARANDELA,ALETA	8531-33-043	2		
33047	BEARING,FRONT WHEEL ROULEMENT ROUE AV RODAMIENTO,RUEDA DELANTER	8545-33-047	2		
33049	COVER,SET JEU DE CACHE JUEGO DE COBERTORES	0259-33-049	2		
33065	SEAL,OIL ARRET D'HUILE RETEN,ACEITE	0398-33-065	2		
33071	CAP,HUB BOUCHON, MOYEN TAPA RUEDA,COPA	0419-33-071	2		
33075	BEARING,FRONT WHEEL ROULEMENT ROUE AV RODAMIENTO,RUEDA DELANTER	8531-33-075	2		
33235	CLIP ATTACHE PRENSA TRABA GAZA	8871-33-235	4		
33251B	PLATE,HUB/DISK PLATEAU MOYEU	8871-33-251A	2		
33260	ADAPTER(R),MOUNTING ADAPTEUR,SUPPORT ADAPTADOR,MONTAJE	8871-33-260A	1		
33260	ADAPTER(L),MOUNTING ADAPTATEUR DE SUPPORT G	8871-33-270A	1		
33280A	SUPPORT,MOUNTING SUPPORT DE FIXATION SOPORTE,MONTAJE	8871-33-280A	2		
33626A	SHIM EPAISSEUR LAINA	3648-33-626A	4		SA22C .. 510189-
		8871-33-626	4		SA22C .. 500001 -510188
33636A	SPRING,PAD RESSORT PLAQUETTE FREIN	1243-33-636	2		

3300A FRONT AXLE & BRAKES (1979 MODEL)

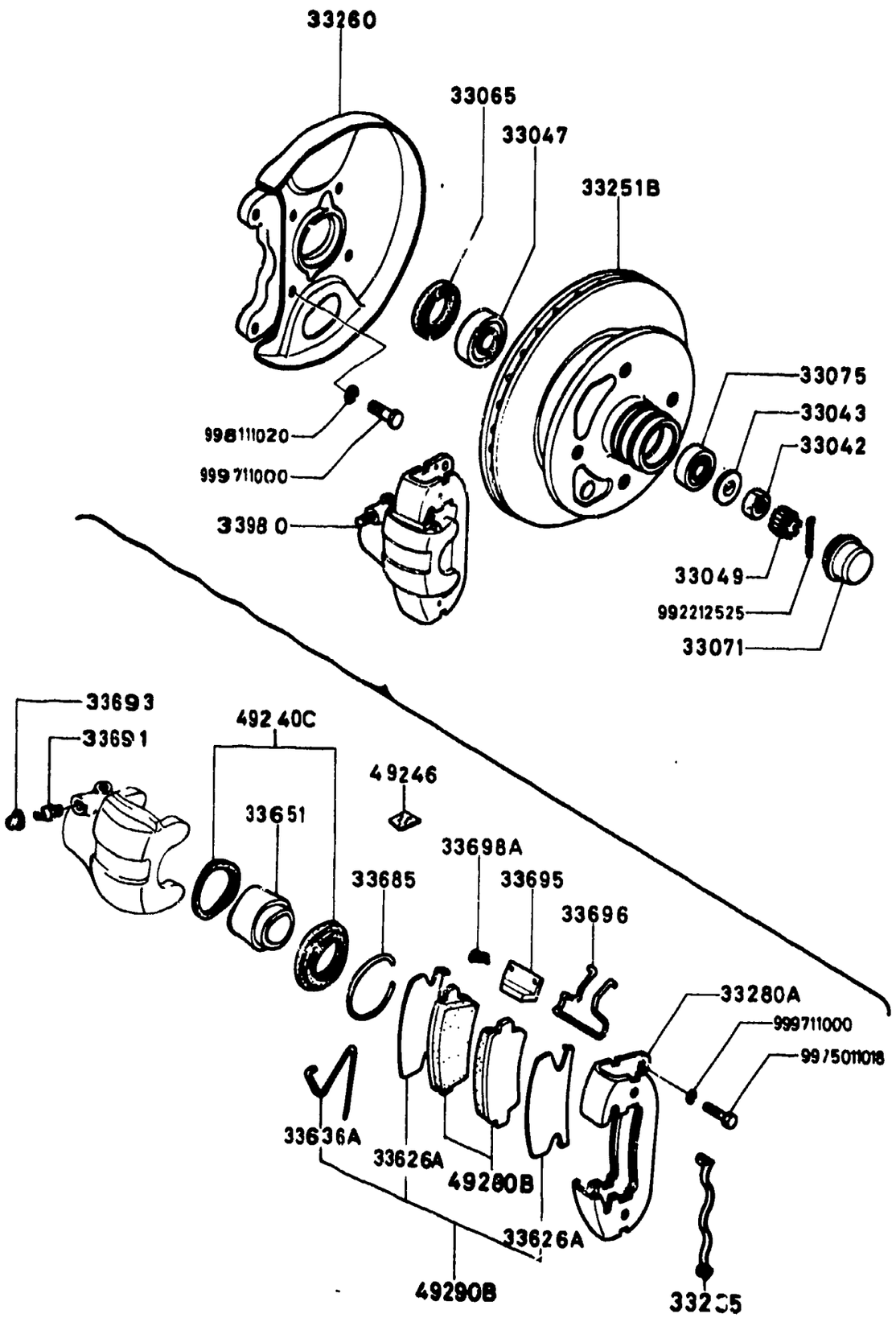

3300A-2* FRONT AXLE & BRAKES (1979 MODEL)

D-CODE (Key No.)	PART NAME	PART No.	Qty.	MODEL/DESCRIPTION	VIN (Chassis No.)
33651	PISTON PISTON PISTON	1243-33-651	2		
33685	RING,BOOT COLLIER DE CACHE-LEVIER ARO,GUARDAPOLVO	1243-33-685	2		
33691	SCREW,BLEEDER VIS DE PURGE TORNILLO,PURGADOR	0233-33-691	2		
33693	CAP,RUBBER BOUCHON DE CAOUTCHOUC TAPON DE HULE	0600-33-693	2		
33695	PLUG,SUPPORT CALES DE PLAQUETTES TAPA SOPORTE	8871-33-695	4		
33696	SPRING RESSORT RESORTE	8871-33-696	4		
33698A	PIN CLAVETTE PASADOR	0305-33-698A	8		
33980	BRAKE(R),CALIPER DISQUE (D), FREIN FRENO (DR),DISCO	8871-33-980B	1		
33980	BRAKE(L),CALIPER DISQUE (G), FREIN FRENO (IZ),DISCO	8871-33-990B	1		
49240C	SEAL KIT JEU DE JOINTS	1243-49-240	1		
49246	GREASE GRAISSE	1243-49-246	1		
49280B	PAD SUB SET,F	8871-49-280	1		
49290B	ATTACHMENT-PAD	8871-49-290	1		

3300AA FRONT AXLE & BRAKES (1980 MODEL)

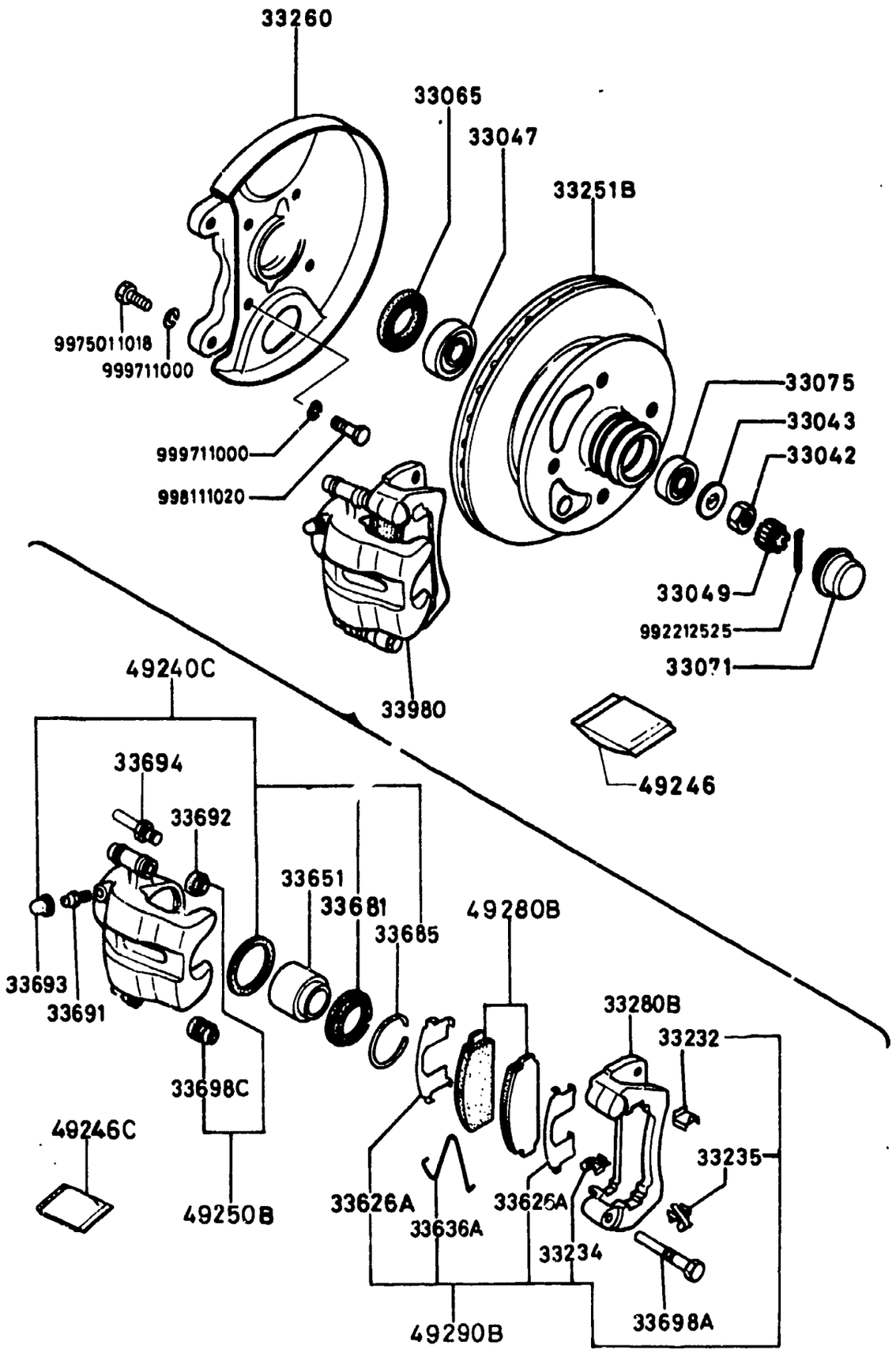

3300AA-1 FRONT AXLE & BRAKES (1980 MODEL)

D-CODE (Key No.)	PART NAME	PART No.	Qty.	MODEL/DESCRIPTION	VIN (Chassis No.)
33042	NUT ECROU TUERCA	0259-33-042	2		
33043	WASHER,TAB RONDELLE ARANDELA,ALETA	8531-33-043	2		
33047	BEARING,FRONT WHEEL ROULEMENT ROUE AV RODAMIENTO,RUEDA DELANTER	8545-33-047	2		
33049	COVER,SET JEU DE CACHE JUEGO DE COBERTORES	0259-33-049	2		
33065	SEAL,OIL ARRET D'HUILE RETEN,ACEITE	0398-33-065	2		
33071	CAP,HUB BOUCHON, MOYEN TAPA RUEDA,COPA	0419-33-071	2		
33075	BEARING,FRONT WHEEL ROULEMENT ROUE AV RODAMIENTO,RUEDA DELANTER	8531-33-075	2		
33232	CLIP A,PAD RH.	8341-33-232	2		
33232	CLIP A,PAD LH.	8341-33-231	2		
33234	CLIP B,PAD RH	8341-33-234	1		
33234	CLIP B,PAD LH.	8341-33-233	1		
33235	CLIP ATTACHE PRENSA TRABA GAZA	8341-33-235	2		
33251B	PLATE,HUB/DISK PLATEAU MOYEU	8871-33-251A	2		
33260	ADAPTER(R),MOUNTING ADAPTEUR,SUPPORT ADAPTADOR,MONTAJE	8871-33-260A	1		
33260	ADAPTER(L),MOUNTING ADAPTATEUR DE SUPPORT G	8871-33-270A	1		

3300AA FRONT AXLE & BRAKES (1980 MODEL)

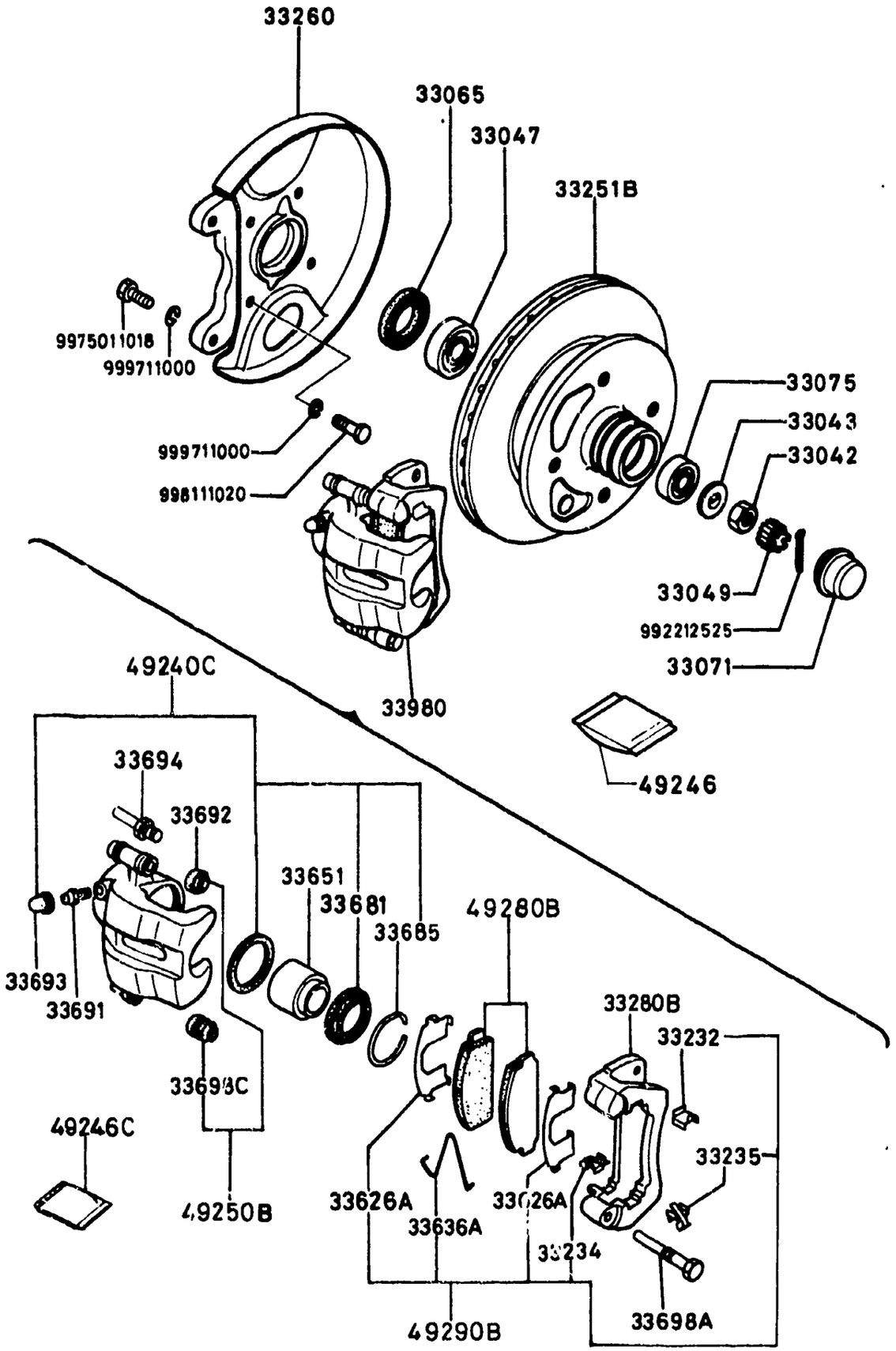

D-CODE (Key No.)	PART NAME	PART No.	Qty.	MODEL/DESCRIPTION	VIN (Chassis No.)
33280B	SUPPORT(R),MOUNTING SUPPORT(D)MONTAGE	8341-33-281	1		
33280B	SUPPORT(L),MOUNTING SUPPORT(G)MONTAGE	8341-33-291	1		
33626A	SHIM EPAISSEUR LAINA	3648-33-626A	4		
33636A	SPRING,PAD RESSORT PLAQUETTE FREIN	1243-33-636	2		
33651	PISTON PISTON PISTON	8341-33-651	2		
33681	BOOT COIFFE FUNDA	8341-33-681	2		
33685	RING,BOOT COLLIER DE CACHE-LEVIER ARO,GUARDAPOLVO	8341-33-685	2		
33691	SCREW,BLEEDER VIS DE PURGE TORNILLO,PURGADOR	0233-33-691	2		
33692	BOOT,GUIDE PIN	8341-33-692	2		
33693	CAP,RUBBER BOUCHON DE CAOUTCHOUC TAPON DE HULE	0600-33-693	2		
33694	PIN,GUIDE	8341-33-694	2		
33698A	PIN CLAVETTE PASADOR	8341-33-699	2		
33698C	BOOT,LOCK PIN	8341-33-698	2		
33980	BRAKE(R),CALIPER DISQUE (D), FREIN FRENO (DR),DISCO	8341-33-980	1		
33980	BRAKE(L),CALIPER DISQUE (G), FREIN	8341-33-990	1		

3300AA FRONT AXLE & BRAKES (1980 MODEL)

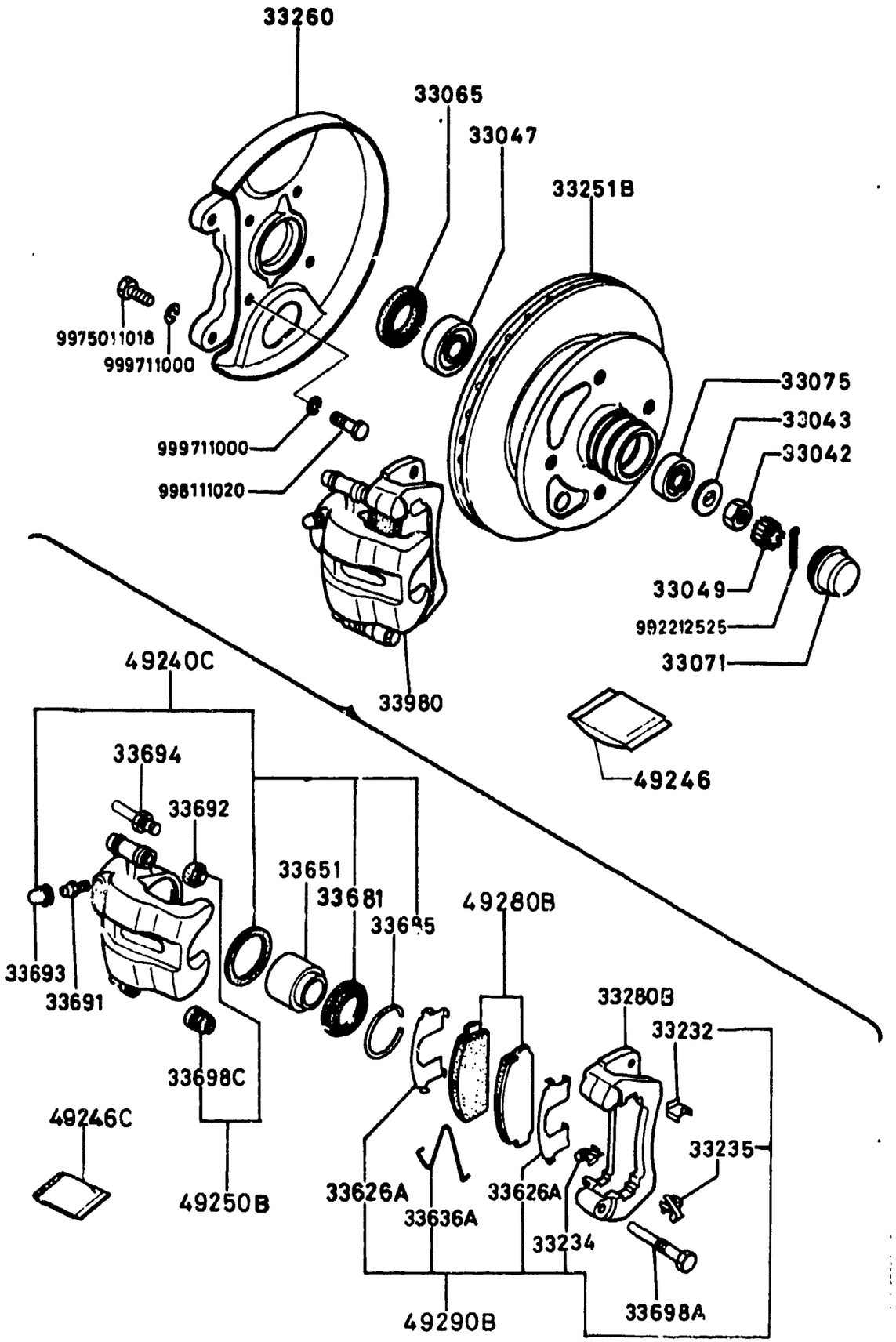

3300AA-3* FRONT AXLE & BRAKES (1980 MODEL)

D-CODE (Key No.)	PART NAME	PART No.	Qty.	MODEL/DESCRIPTION	VIN (Chassis No.)
33980 CONT'D	FRENO (IZ), DISCO	8341-33-990			
49240C	SEAL KIT JEU DE JOINTS	8341-49-240	1		
49246	GREASE GRAISSE	0296-49-246	2	(2G)	
49246C	GREASE GRAISSE GRASA	8341-49-248	1	(2G)	
		8341-49-270	1	(50G)	
49250B	BOOT KIT	8341-49-250	1		
49280B	PAD SUB SET,F	8871-49-280	1		
49290B	ATTACHMENT-PAD	8341-49-290	1		

3400A FRONT SUSPENSION

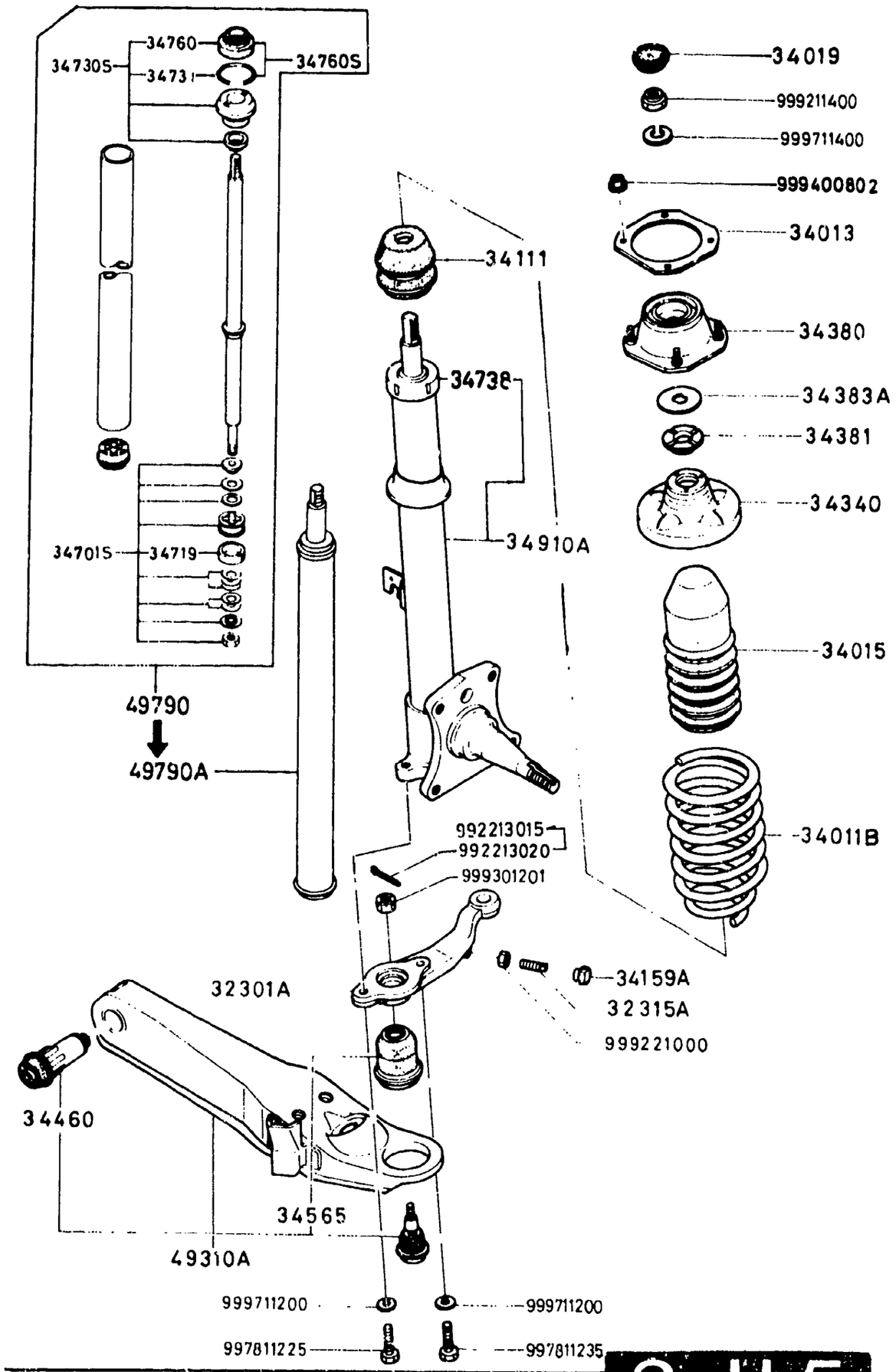

3400A-1 FRONT SUSPENSION

D-CODE (Key No.)	PART NAME	PART No.	Qty.	MODEL DESCRIPTION	VIN (Chassis No.)
32301A	ARM(R),KNUCKLE BRAS D'ARTICULATION D. BRAZO (DR),ARTICULACION	8871-32-301	1		SA22C .. 500001 -509350
	<A >	8871-32-301B	1		SA22C .. 509351 -559739
		8871-32-301C	1		SA22C .. 559740-
32301A	ARM(L),KNUCKLE BRAS D'ARTICULATION G.	8871-32-311	1		SA22C .. 500001 -509350
	<A >	8871-32-311B	1		SA22C .. 509351 -559739
		8871-32-311C	1		SA22C .. 559740-
32315A	BOLT,STOPPER BOULON PERNO,TOPADOR	0603-32-315	2		
34011B	SPRING(R),COIL RESSORT A BOUDIN(D)	8562-34-011A	1		
34011B	SPRING(L),COIL RESSORT A BOUDIN(G)	8871-34-011B	1		
34013	PLATE,ADJUST PLAQUETTE D'AJUSTAGE PLACA DE AJUSTE	1011-34-013	2		
34015	COVER,DUST CACHE, POUSSIERE COBERTOR PARA POLVO	0866-34-015	2		
34019	CAP,DAMPER CAPUCHON, AMORTISSEUR TAPA SALIDA DE GASES	1011-34-019	2		
34111	BUMPER,BOUND BUTEE DE TALONNAGE PARA-GOLPES,TERMINAL	8871-34-111A	2		
34159A	STOPPER,STEERING BOUCHON, BRAS STAB. TAPON,DIRECCION	1243-34-159	2		
34340	SEAT,SPRING-UPPER SIEGE DE RESSORT, SUP. ASIENTO,RESORTE SUPERIOR	8871-34-340A	2		

3400A FRONT SUSPENSION

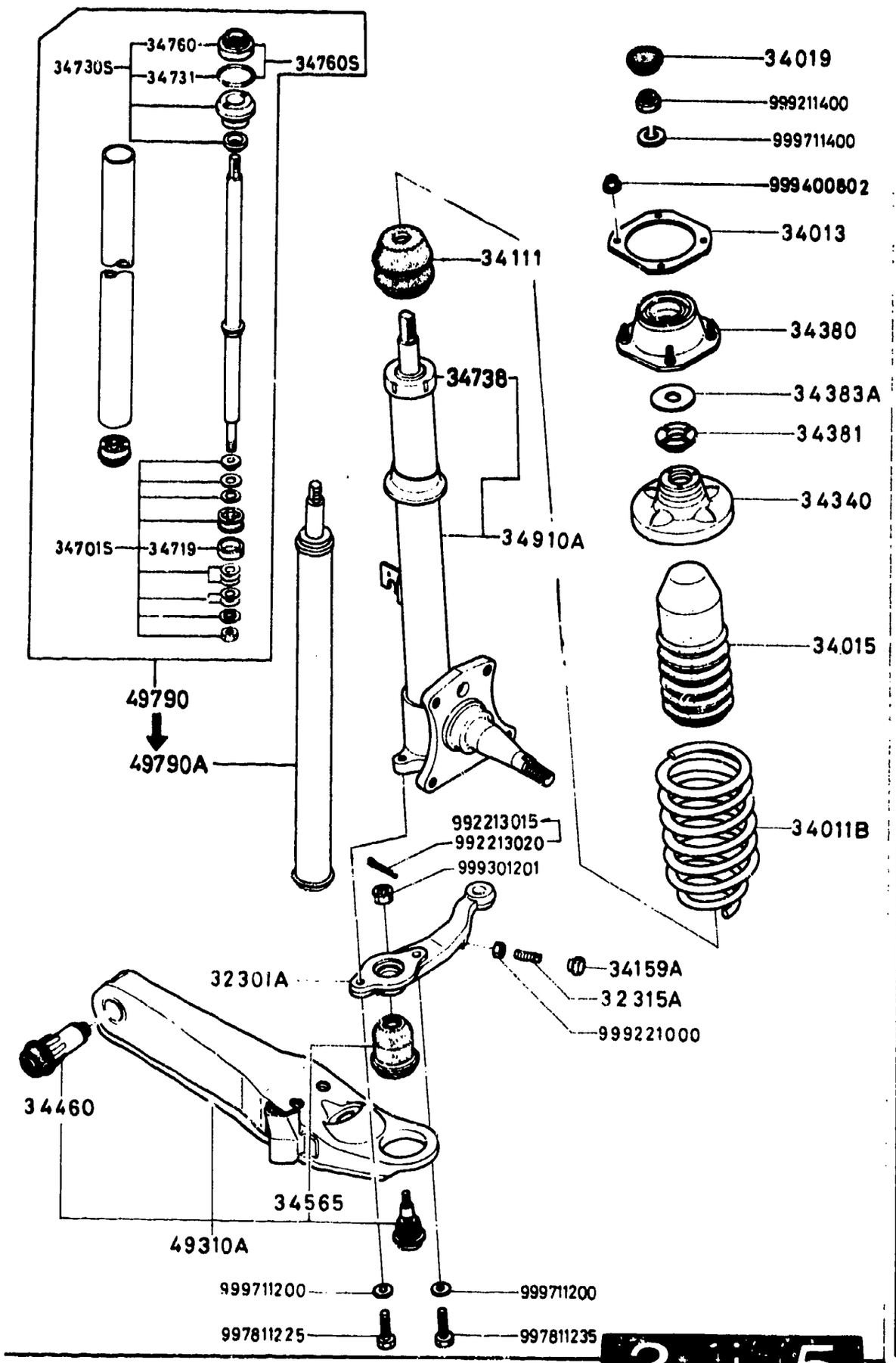

3400A-2 FRONT SUSPENSION

D-CODE (Key No.)	PART NAME	PART No.	Qty.	MODEL DESCRIPTION	VIN (Chassis No.)
34380	BLOCK,MOUNTING SUPPORT BLOQUE MONTAJE	8871-34-390	2		
34381	BEARING,THRUST FLASQUE RODAMIENTO,AXIAL	0866-34-381A	2		
34383A	SEAT SIEGE ASIENTO	0866-34-382	2		
34460	BUSH,ARM BUSELURE, BRAS FUSEE BUJE,BRAZO	0866-34-460	2		SA22C .. 500001 -531680
		8173-34-460A	2		SA22C .. 531681-
34565	SEAL,DUST CACHE-POUSSIERE SELLO,POLVO	8531-34-565	2		
34701S	PISTON SET JEU DE PISTON JUEGO DE PISTONES	0881-99-362A	2		SA22C .. 500001 -569398
34719	RING,PISTON SEGMENT ANILLO,PISTON	0259-34-719A	2		SA22C .. 500001 -575603
34730S	SEAL SET JEU JOINTS	8545-99-361	2		SA22C .. 500001 -575603
34731	RING,'O' JOINT 'O' SELLO DE GOMA 'O'	0183-34-731	2		SA22C .. 500001 -575603
		*8171-34-731	2		SA22C .. 575604-
34738	CAP BOUCHON TAPA	0866-34-738A	2		SA22C .. 500001 -575603
34760	SEAL,OIL ARRET D'HUILE RETEN,ACEITE	0866-34-760	2		SA22C .. 500001 -575603
		*8171-34-760	2		SA22C .. 575604-
34760S	SEAL SET,DAMPER JEU JOINTS AMORTISSEUR	*8171-34-970	2		SA22C .. 575604-

3400A FRONT SUSPENSION

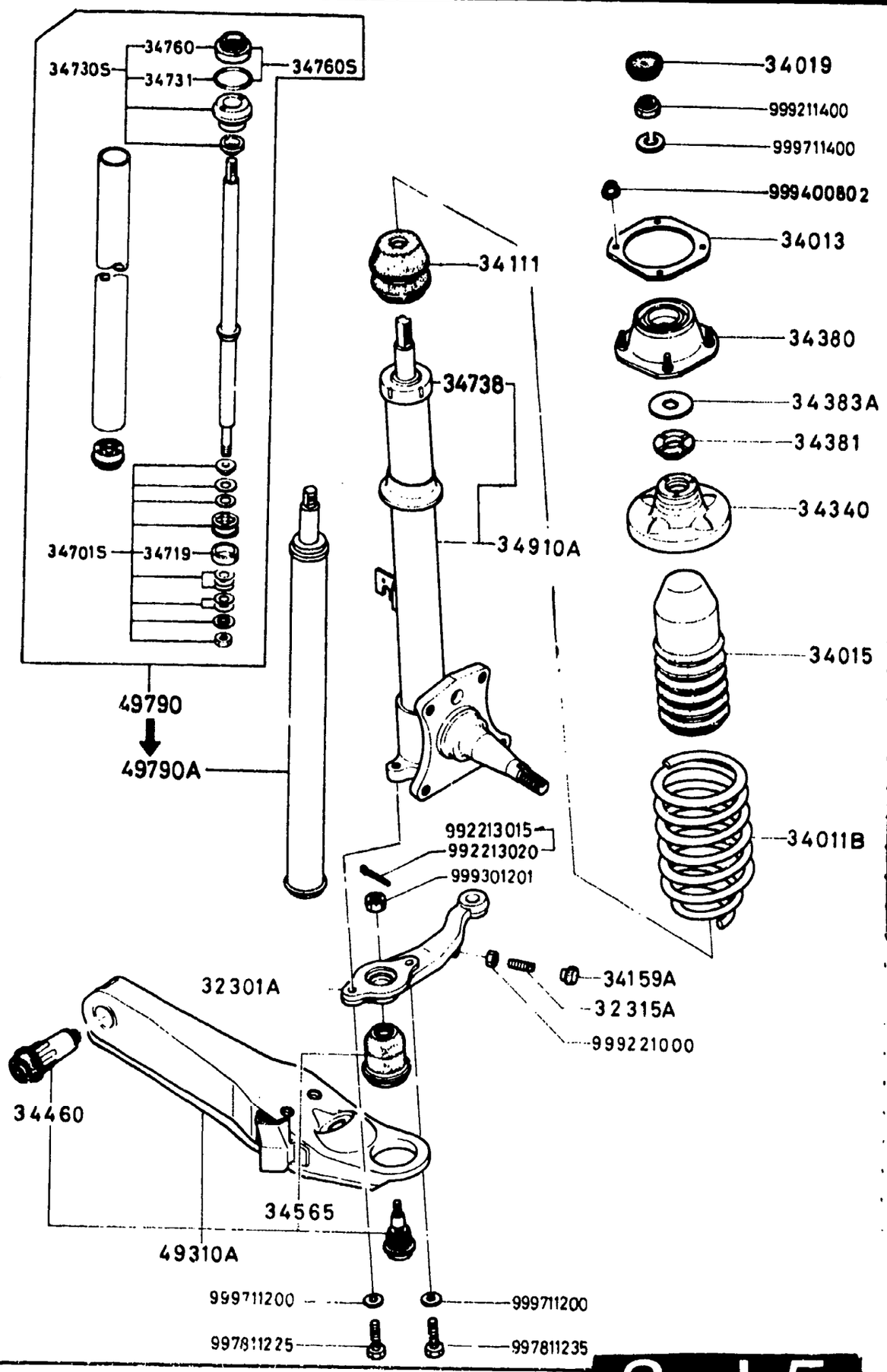

3400A-3* FRONT SUSPENSION

D-CODE (Key No.)	PART NAME	PART No.	Qty.	MODEL DESCRIPTION	VIN (Chassis No.)
34910A	DAMPER AMORTISSEUR AMORTIGUADOR	8562-34-910A	2		SA22C .. 575604-
		8871-34-910A	2		SA22C .. 500001 ->75603
49310A	ARM & BALL JOINT(R) SUPPORT & ROTULE SUSP.(D)	8871-49-310	1		
49310A	ARM & BALL JOINT(L) SUPPORT & ROTULE SUSP.(G)	8871-49-320	1		
49790	DAMPER SUB SET,FRT. KIT AMORTISSEURS AV.	8871-49-790	2		SA22C .. 500001 -575603
49790A	CARTRIDGE,DAMPER	•8562-49-790	2		SA22C .. 575604-

3410A CROSSMEMBER & STABILIZER

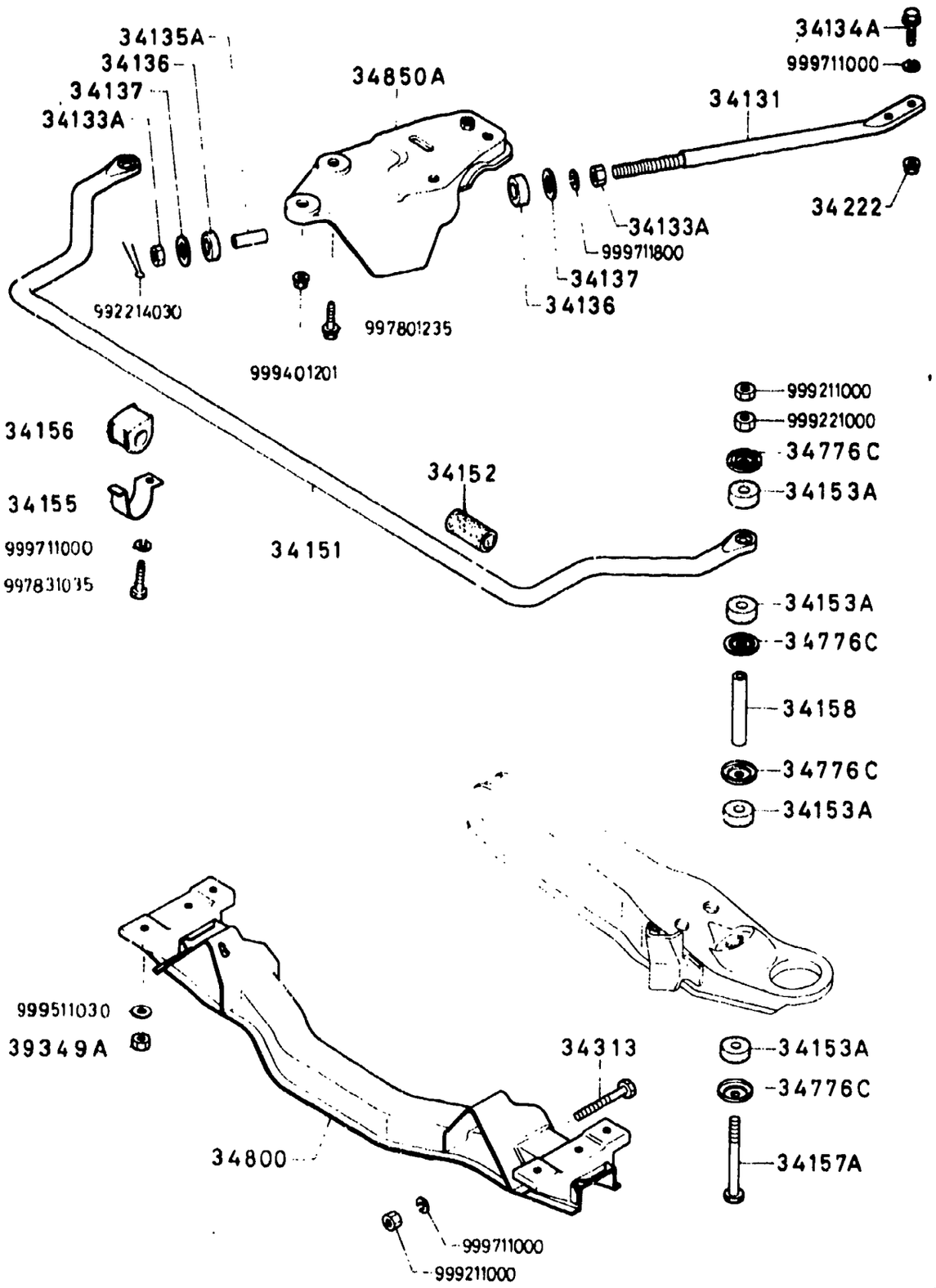

34 10A-1 CROSSMEMBER & STABILIZER

D-CODE (Key No.)	PART NAME	PART No.	Qty.	MODEL DESCRIPTION	V I N (Chassis No.)
34131	ROD, TENSION TIGE DE TENSION	8871-34-131A	2		
34133A	NUT, TENSION ROR ECROU, TIGE TENSION	8871-34-133A	4		
34134A	BOLT, TENSION ROD BOULON TIGE DE TENSION	8871-34-134	4		SA22C .. 500001 -583526
		8871-34-134A	4		SA22C .. 583527-
34135A	SPACER RONDELLE ESPACIADOR	8871-34-135A	2		
34136	CHUSION HOUSSE ALMOHADA	8871-34-136B	4		
34137	RETAINER ARRET RETENTOR	8871-34-137A	4		
34151	STABILIZER STABILISATEUR ESTABILIZADOR	8871-34-151	1		
34152	PROTECTOR PROTECTION PROTECTOR	8871-34-152	2		
34153A	BUSH BUSELURE BUJE	1243-34-153	8		
34155	PLATE, STABILIZER PLAQUE, BARRE STABIL. PLATO ESTABILIZADOR	8871-34-155	2		
34156	BUSH BUSELURE BUJE	8871-34-156A	2		
34157A	BOLT BOULON PERNO	0603-34-157A	2		
34158	SPACER RONDELLE ESPACIADOR	0603-34-158	2		
34222	NUT ECROU TUERCA	8871-34-222	4		

3410A CROSSMEMBER & STABILIZER

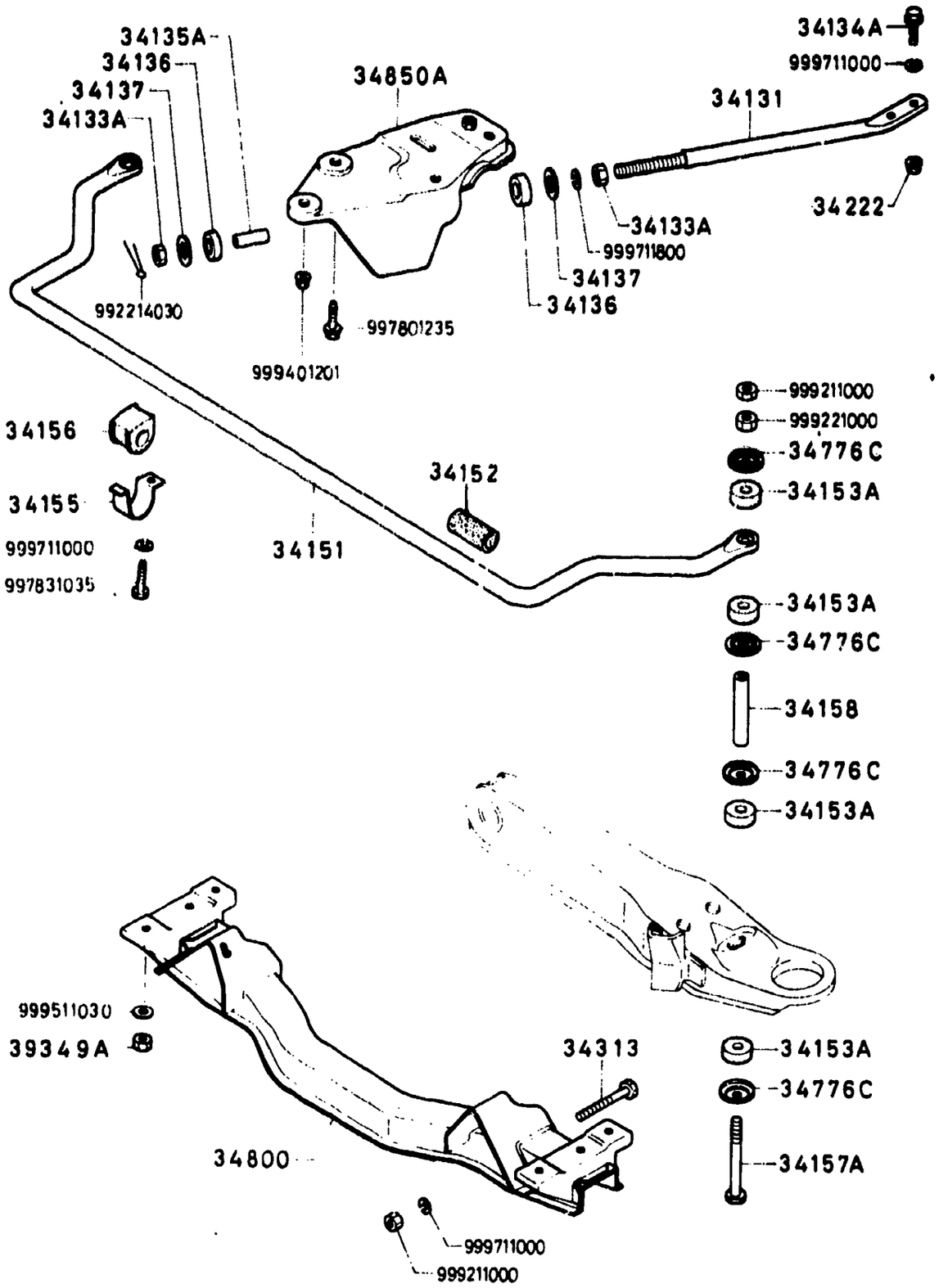

3410A-2* CROSSMEMBER & STABILIZER

D-CODE (Key No.)	PART NAME	PART No.	Qty.	MODEL/DESCRIPTION	VIN (Chassis No.)
34313	BOLT,ARM BOULON DE BRAS PERNO,BRAZO	0866-34-313A	2		
34776C	RETAINER ARRET RETENTOR	0187-34-776	8		
34800	MEMBER,CROSS TRAVERSE MIEMBRO DE CHASSIS	8871-34-800	1		SA22C .. 500001 -500134
		8871-34-800A	1		SA22C .. 500135 -569398
		8871-34-800B	1		SA22C .. 569399-
34850A	BRKT(R),TENSION ROD SUPPORT TIGE TENSION(D)	8871-34-850D	1		
34850A	BRKT.(L),TENSION ROD SUPPORT DE TIGE(G)	8871-34-860D	1		
39349A	NUT,CROSS MEMBER ECROU DE TRAVERSE	1391-39-349	4		

SECTION NUMBER INDEX (CHASSIS)

STARTING LOCATION	SECTION No.	SECTION NAME
2–C2	2500A	PROPELLER SHAFT
2–D2	2600A	REAR AXLE
2–E2	2610A	REAR BRAKES
2–C3	2700A	DIFFERENTIAL
2–F3	2800A	REAR SUSPENSION
2–C4	3200A	STEERING WHEEL
2–F4	3210A	STEERING GEAR & COLUMN
2–H4	3230A	STEERING LINKAGE
2–C5	3300A	FRONT AXLE & BRAKES
2–H5	3400A	FRONT SUSPENSION
2–K5	3410A	CROSSMEMBER & STABILIZER
2–C6	3700A	TIRE & JACK
2–G6	3900A	ENGINE & T/MISSION MOUNTINGS
2–C7	4000A	EX. SYSTEM
2–C8	4140A	CLUTCH RELEASE & MASTER CYLINDERS (MANUAL)
2–E8	4160A	ACCELERATOR CONTROLS
2–F8	4200A	FUEL TANK
2–C9	4300A	CLUTCH & BRAKE
2–E9	4340A	TANDEM MASTER CYLINDER & VACUUM POWER ASSIST SYSTEM
2–H9	4360A	BRAKE PIPINGS
2–C10	4400A	PARKING BRAKE SYSTEM
2–E10	4500A	FUEL & EVAPORATION PIPINGS
2–H10	4600A	CHANGE CONTROLS (AUTOMATIC)

THE FRAMES IN THIS COLUMN INDICATE :

2---C6	3700A	TIRE & JACK
2---G6	3900A	ENGINE & T/MISSION MOUNTINGS

© 1983 Toyo Kogyo Co., Ltd.
MAY 1983

3700A TIRE & JACK

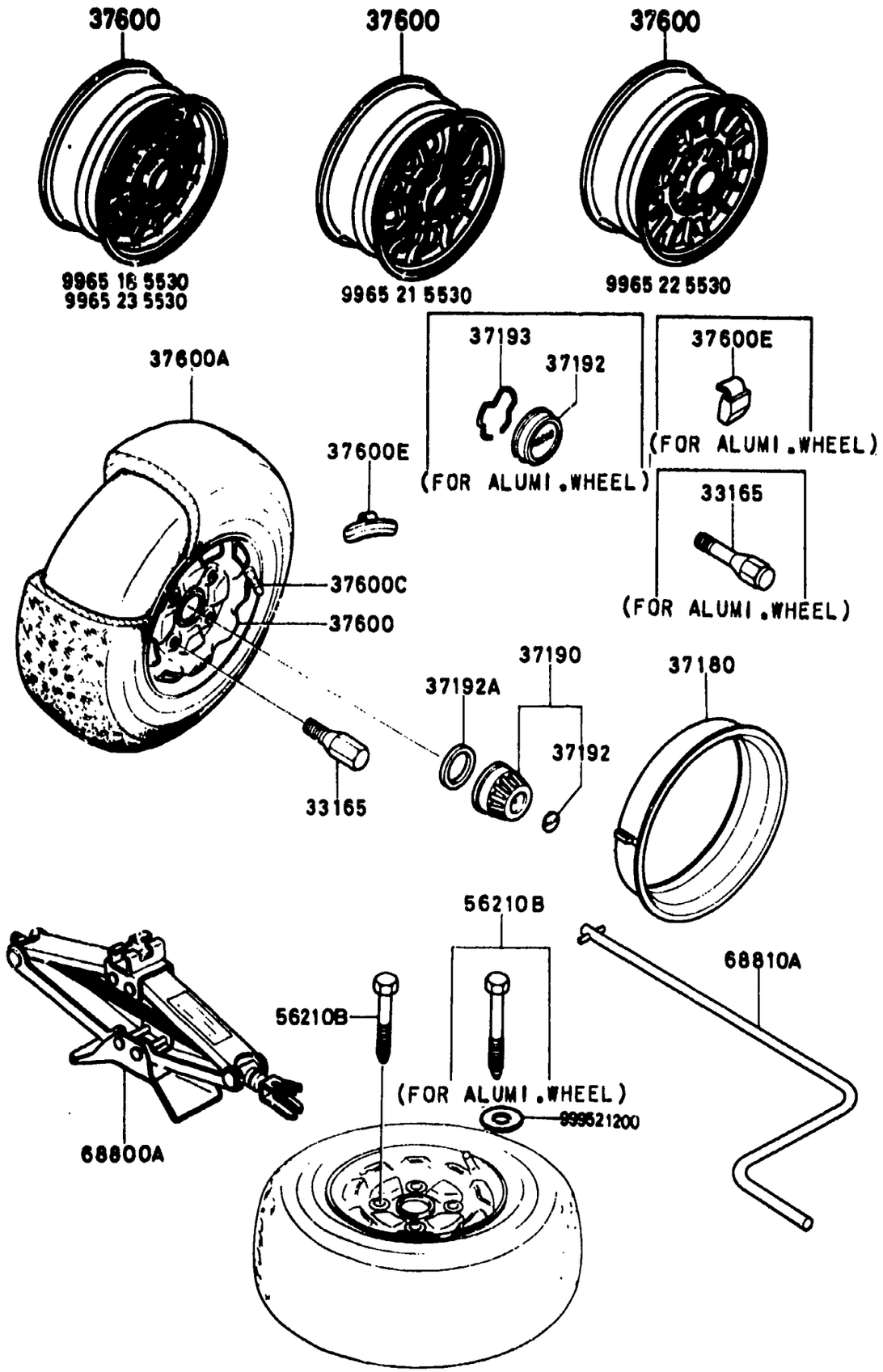

3700A-1 TIRE & JACK

D-CODE (Key No.)	PART NAME	PART No.	Qty.	MODEL/DESCRIPTION	VIN (Chassis No.)
33165	BOLT,WHEEL SET BOULONS ET ECROUS,MOYEN PERNOS,JUEGO DE RUEDA	1029-33-165	16	(FOR 9965115030)(L=44) (FOR 9965225530)	
		8871-37-165	16	(FOR 9965185530)(L=62.5) (FOR 9965215530) (FOR 9965235530)	
37180	RING,WHEEL	1011-37-182C	4	(FOR DESIGN WHEEL)	
37190	CAP,CENTER ENJOLIVEUR DE MOYEU TAPA CENTRAL	8871-37-190	4	(FOR DESIGN WHEEL)	
		8872-37-190	4	(FOR ALUMI.WHEEL YOKOHAMA MAKE)	SA22C .. 531149 -568500
37192	EMBLEM EMBLEME EMBLEMA	1242-37-191	4	(FOR ALUMI. WHEEL)	
		8531-37-192	4	(FOR ALUMI.WHEEL YOKOHAMA MAKE)	SA22C .. 531149 -568500
		8871-37-192	4	(FOR DESIGN WHEEL)	
37192A	RUBBER,SET JEU CAOUTCHOUC GOMAS JUEGO	8531-37-193C	4		
37193	SPRING,SET JEU DE RESSORTS RESORTE,JUEGO	1219-37-193	4	(FOR ALUMI. WHEEL)	
37600	WHEEL,DISC JANTE	9965-11-5030	5	(DESIGN WHEEL) (5.00JX13 WDC)	
	SUNBEAM METALLIC	K3			
	SILVER METALLIC	08			
		9965-18-5530	5	(ALUMI. WHEEL) (NKK MAKE) (5.50JJX13WDC)	

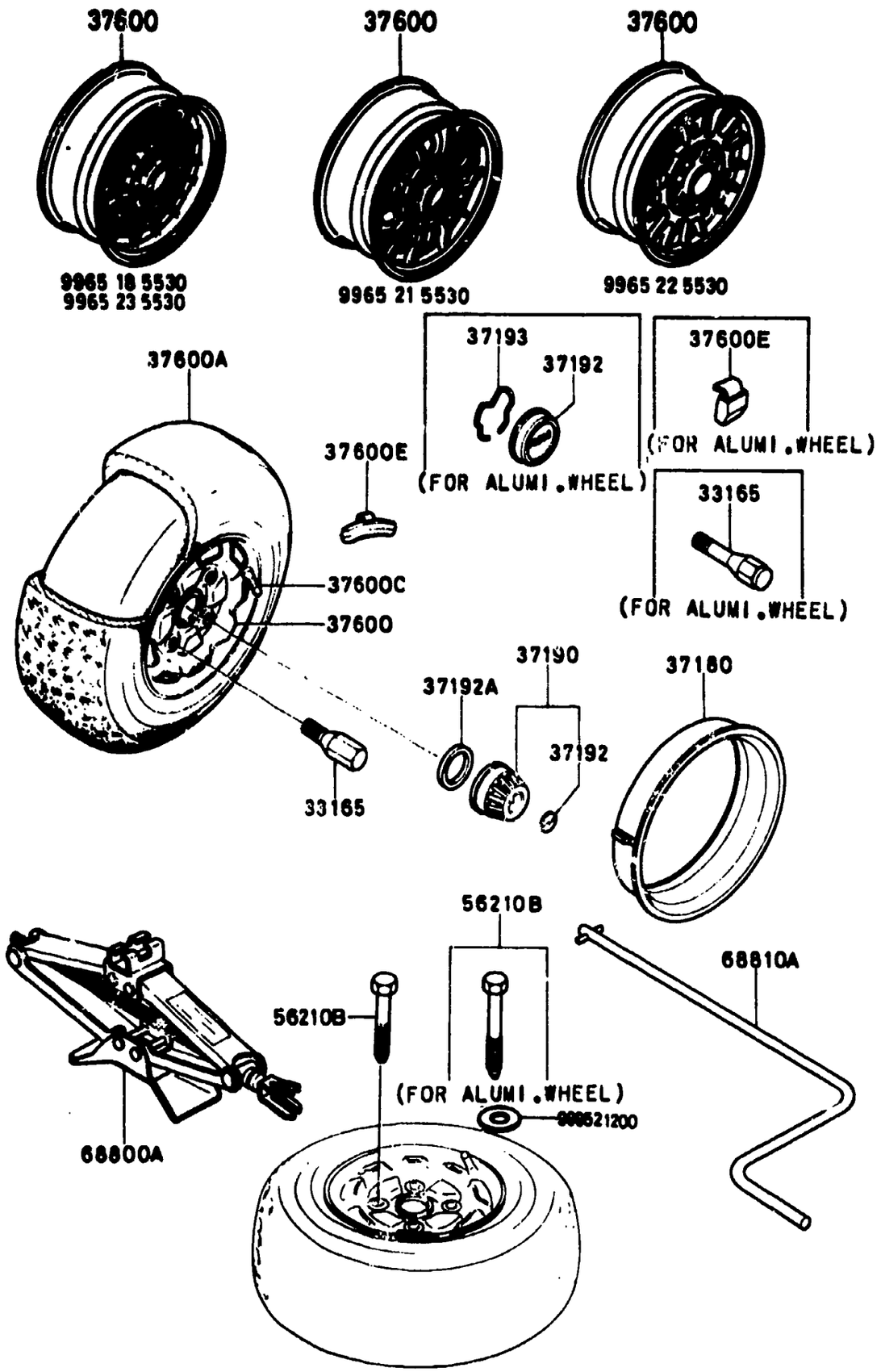

D-CODE (Key No.)	PART NAME	PART No.	Qty.	MODEL/DESCRIPTION	VIN (Chassis No.)
37600 CONT'D		9965-21-5530	5	(ALUMI. WHEEL) (YOKOHAMA MAKE) (LIMITED) (5.50JJX13WDC)	SA22C .. 542637 -552248
		9965-22-5530	5	(ALUMI. WHEEL) (YOKOHAMA MAKE) (5.50JJX13WDC)	SA22C .. 531149-
		*9965-23-5530	1	(5.50JJX13WDC) (ALMI.WHEEL-GOLD) 80 MODEL	SA22C .. 606775-
37600A	TIRE PNEU	9062-21-7683	5	(185/70HR13 WHITE T/L)	
		9062-36-7683	5	(185/70HR13 BLACK T/L)	
		9962-39-1653	5	(165 HR-13) 80 MODEL	
37600C	VALVE,AIR SOUPAPE AIR	9963-60-4130	5	(TR413)	
37600E	WEIGHT,BALANCING POIDS DE COMPENSATION	9965-53-0010	5	(10G)	
		9965-53-0015	5	(15G)	
		9965-53-0020	5	(20G)	
		9965-53-0025	5	(25G)	
		9965-53-0030	5	(30G)	
		9965-53-0035	5	(35G)	
		9965-53-0040		(40G)	

3700A TIRE & JACK

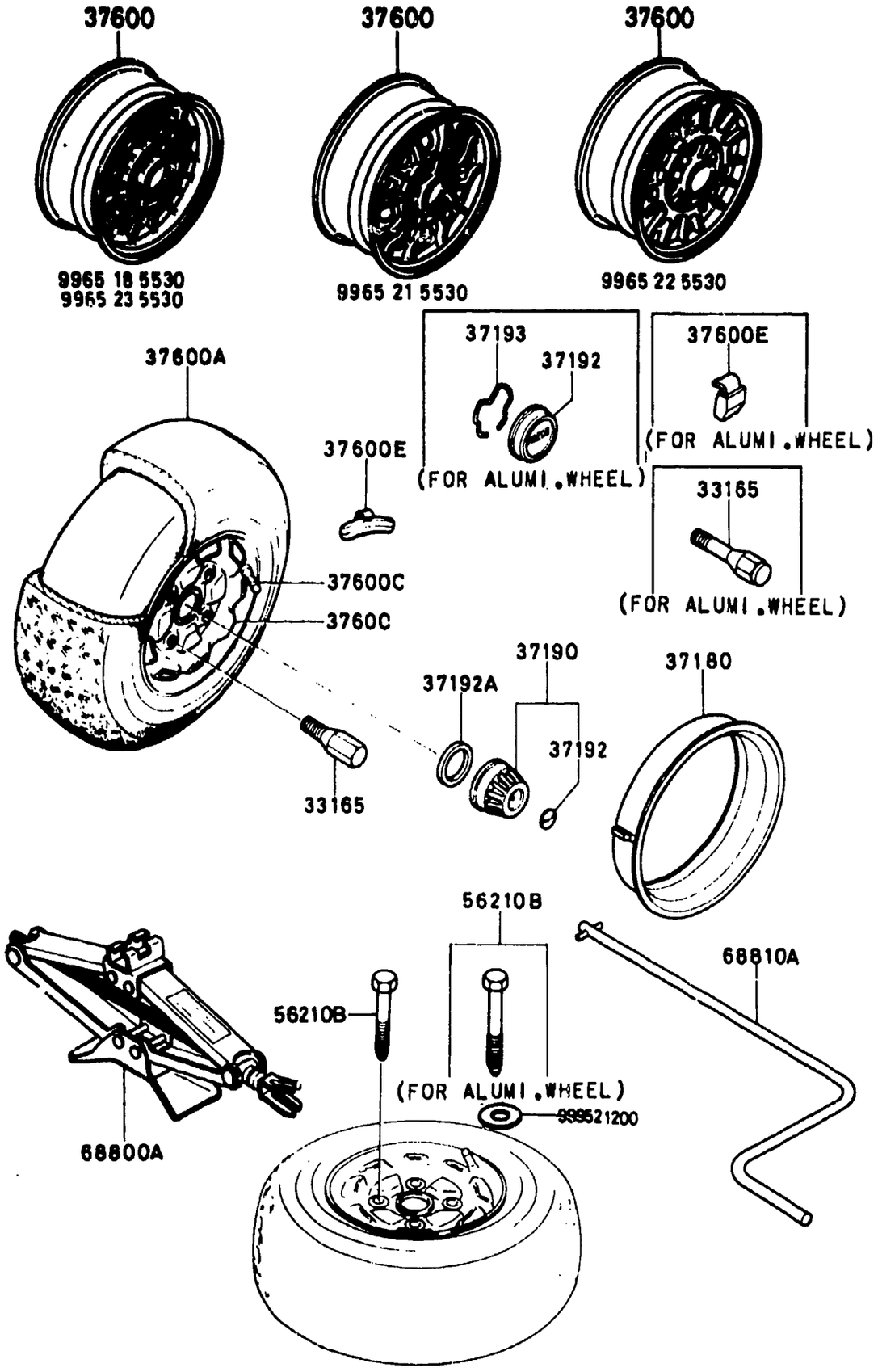

3700A-7 TIRE & JACK

D-CODE (Key No.)	PART NAME	PART No.	Qty.	MODEL/DESCRIPTION	VIN (Chassis No.)
37600E CONT° D		9965-53-0040	5		
		9965-53-0045	5	(45G)	
		9965-53-0050	5	(50G)	
		9965-53-0060	5	(60G)	
		9965-59-0010	5	(NKK MAKE) (10G FOR ALUMI.WHEEL)	
		9965-59-0015	5	(NKK MAKE) (15G FOR ALUMI.WHEEL)	
		9965-59-0020	5	(NKK MAKE) (20G FOR ALUMI.WHEEL)	
		9965-59-0025	5	(NKK MAKE) (25G FOR ALUMI.WHEEL)	
		9965-59-0030	5	(NKK MAKE) (30G FOR ALUMI.WHEEL)	
		9965-59-0035	5	(NKK MAKE) (35G FOR ALUMI.WHEEL)	
		9965-59-0040	5	(NKK MAKE) (40G FOR ALUMI.WHEEL)	
		9965-59-0045	5	(NKK MAKE) (45G FOR ALUMI.WHEEL)	
		9965-59-0050	5	(NKK MAKE) (50G FOR ALUMI.WHEEL)	
		9965-59-0060	5	(NKK MAKE) (60G FOR ALUMI.WHEEL)	
		9965-60-0010	5	(YOKOHAMA MAKE) (10G FOR ALUMI.WHEEL)	SA22C .. 531149-
		9965-60-0015	5	(YOKOHAMA MAKE) (15G FOR ALUMI.WHEEL)	SA22C .. 531149-
		9965-60-0020	5	(YOKOHAMA MAKE) (20G FOR ALUMI.WHEEL)	SA22C .. 531149-
		9965-60-0025		(YOKOHAMA MAKE) (25G FOR ALUMI.WHEEL)	

3700A TIRE & JACK

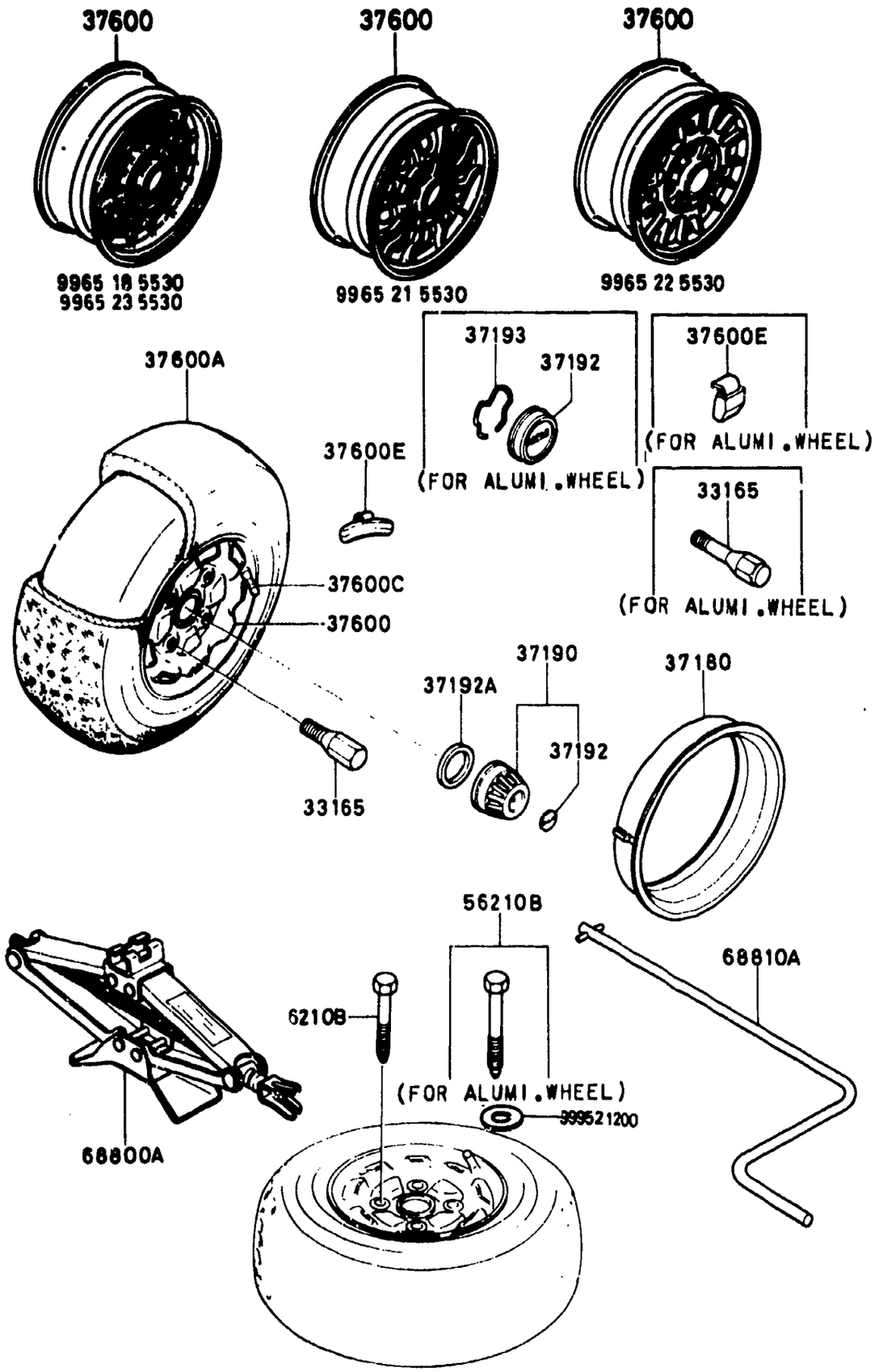

3700A-4* TIRE & JACK

D-CODE (Key No.)	PART NAME	PART No.	Qty.	MODEL/DESCRIPTION	VIN (Chassis No.)
37600E CONT'D		9965-60-0025	5		SA22C .. 531149-
		9965-60-0030	5	(YOKOHAMA MAKE) (30G FOR ALUMI.WHEEL)	SA22C .. 531149-
		9965-60-0035	5	(YOKOHAMA MAKE) (35G FOR ALUMI.WHEEL)	SA22C .. 531149-
		9965-60-0040	5	(YOKOHAMA MAKE) (40G FOR ALUMI.WHEEL)	SA22C .. 531149-
56210B	CLAMP,SPARE TIRE FIXATION, ROUE DE SECOURS	8531-56-961	1	(FOR DESIGN WHEEL)	
		8871-56-961	1	(FOR ALUMI.WHEEL)	
68800A	JACK CRIC GATO	8531-37-790	1		SA22C .. 500001 -510188
		8871-37-790A	1		SA22C .. 510189-
68810A	HANDLE,JACK LEVIER DE CRIC MANERAL	0305-68-810A	1		

3900A ENGINE & T/MISSION MOUNTINGS

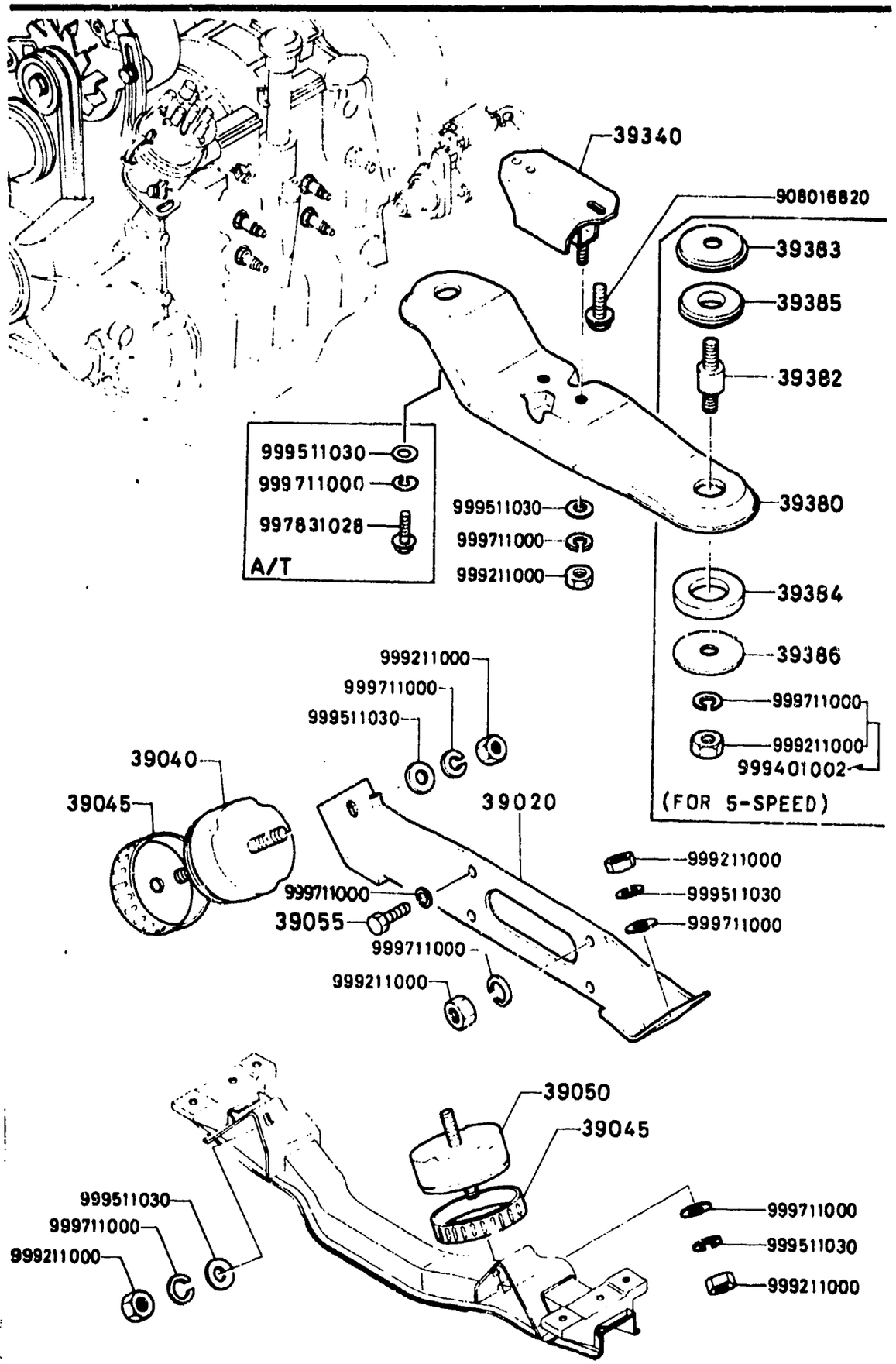

3900A-1 ENGINE & T/MISSION MOUNTINGS

D-CODE (Key No.)	PART NAME	PART No.	Qty.	MODEL/DESCRIPTION	VIN (Chassis No.)
39020	BRACKET,ENGINE MOUNT ATTACHE, SUPPORT MOTEUR SOPORTE,MONTAJE DE MOTOR	8871-39-020	1		SA22C .. 500001 -501476
		8871-39-020A	1		SA22C .. 501477 -554324
		8871-39-021A	1		SA22C .. 554325-
39040	RUBBER(R),ENGINE MT. C.T.C.SUPPORT MOTEUR(D)	1668-39-040D	1		
39045	CASING,STOPPER BOITIER, ARRET ENVOLTURA,TAPON	1668-39-045B	2		
39050	RUBBER(L),ENGINE MT. C.T.C.SUPPORT MOTEUR(G)	8545-39-040	1		
39055	BOLT BOULON PERNO	*8788-39-055	2		SA22C .. 619393-
39340	RUBBER,T/MISSION MT. SUPPORT,BOITE DE VITESSES GOMA,SOPORTE TRANSMISION	1011-39-340A	1		
39380	MEMBER,T/MISSION MT. TRAVERSE SUPPORT TRANSMIS MIEMBRO DE MONTAJE DE T/M	1480-39-380A	1	5-SPEED	SA22C .. 592956-
		1480-39-381	1	5-SPEED	SA22C .. 576762 -592955
		1481-39-380B	1	A/T 4-SPEED	SA22C .. 592956-
		1481-39-381A	1	A/T 4-SPEED	SA22C .. 576762 -592955
		8871-39-381A	1	5-SPEED	SA22C .. 500001 -576761
		8872-39-381	1	A/T 4-SPEED	SA22C .. 500001 -576761

3900A ENGINE & T/MISSION MOUNTINGS

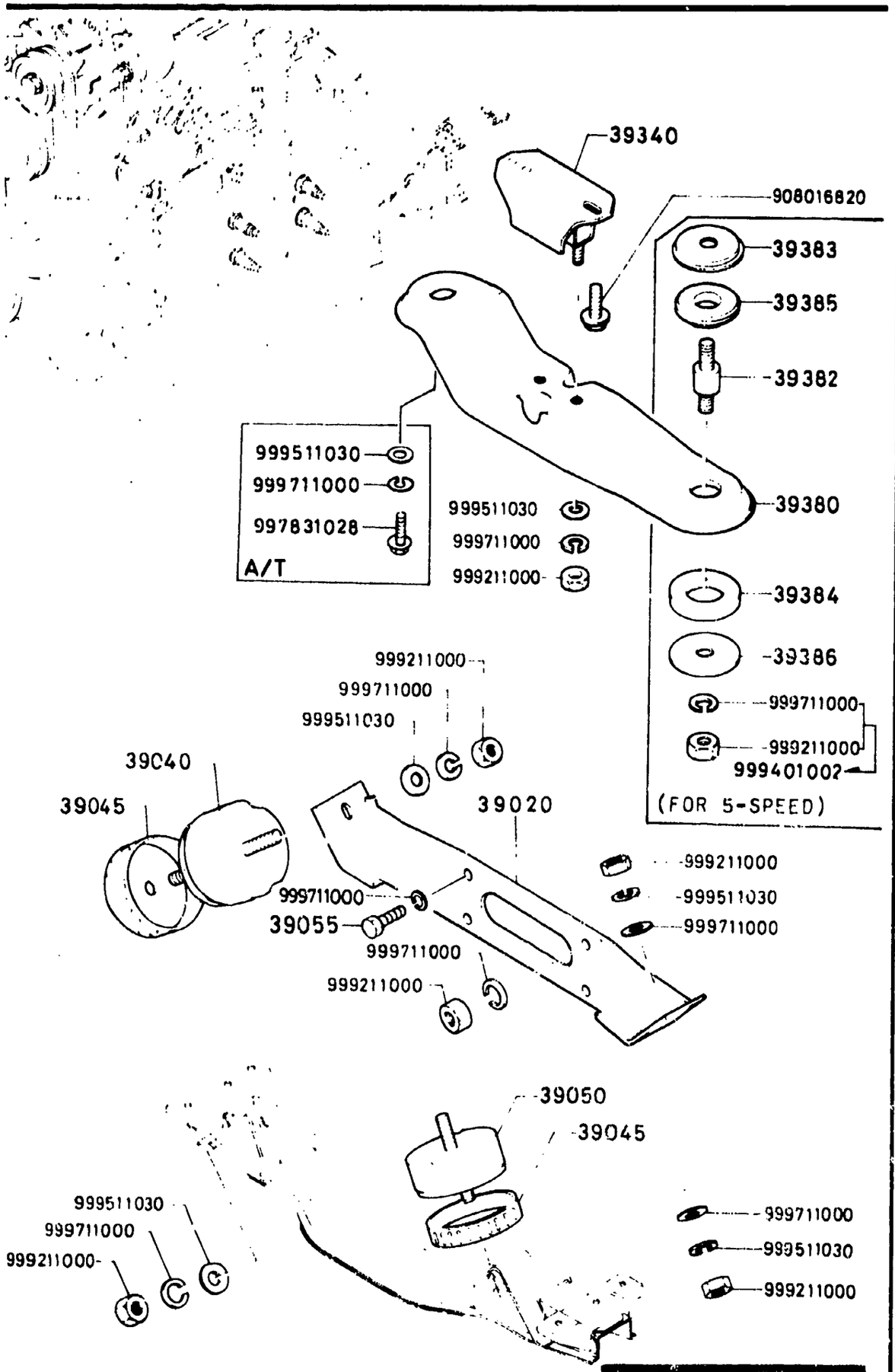

3900A-2* ENGINE & T/MISSION MOUNTINGS

D-CODE (Key No.)	PART NAME	PART No.	Qty.	MODEL DESCRIPTION	VIN (Chassis No.)
39382	STUD GOUJON PRISIONERO	1013-39-382A	2	5-SPEED	
39383	WASHER RONDELLE ARANDELA	0884-39-383A	2	5-SPEED	
39384	INSULATOR, LOWER ISOLATEUR INFERIEUR AISLADOR, INFERIOR	0884-39-384	2	5-SPEED	
39385	INSULATOR, UPPER ISOLATEUR SUPERIEUR AISLADOR, SUPERIOR	0884-39-385A	2	5-SPEED	
39386	WASHER RONDELLE ARANDELA	0884-39-383A	2	5-SPEED	SA22C .. 502399-
		0884-39-386	2	5-SPEED	SA22C .. 500001 -502398

SECTION NUMBER INDEX (CHASSIS)

STARTING LOCATION	SECTION No.	SECTION NAME
2–C2	2500A	PROPELLER SHAFT
2–D2	2600A	REAR AXLE
2–E2	2610A	REAR BRAKES
2–C3	2700A	DIFFERENTIAL
2–F3	2800A	REAR SUSPENSION
2–C4	3200A	STEERING WHEEL
2–F4	3210A	STEERING GEAR & COLUMN
2–H4	3230A	STEERING LINKAGE
2–C5	3300A	FRONT AXLE & BRAKES
2–H5	3400A	FRONT SUSPENSION
2–K5	3410A	CROSSMEMBER & STABILIZER
2–C6	3700A	TIRE & JACK
2–G6	3900A	ENGINE & T/MISSION MOUNTINGS
2–C7	4000A	EX. SYSTEM
2–C8	4140A	CLUTCH RELEASE & MASTER CYLINDERS (MANUAL)
2–E8	4160A	ACCELERATOR CONTROLS
2–F8	4200A	FUEL TANK
2–C9	4300A	CLUTCH & BRAKE
2–L9	4340A	TANDEM MASTER CYLINDER & VACUUM POWER ASSIST SYSTEM
2–H9	4360A	BRAKE PIPINGS
2–C10	4400A	PARKING BRAKE SYSTEM
2–E10	4500A	FUEL & EVAPORATION PIPINGS
2–H10	4600A	CHANGE CONTROLS (AUTOMATIC)

THE FRAMES IN THIS COLUMN INDICATE :

2---C7 4000A EX. SYSTEM

© 1983 Toyo Kogyo Co., Ltd.
MAY 1983

4000A EX. SYSTEM

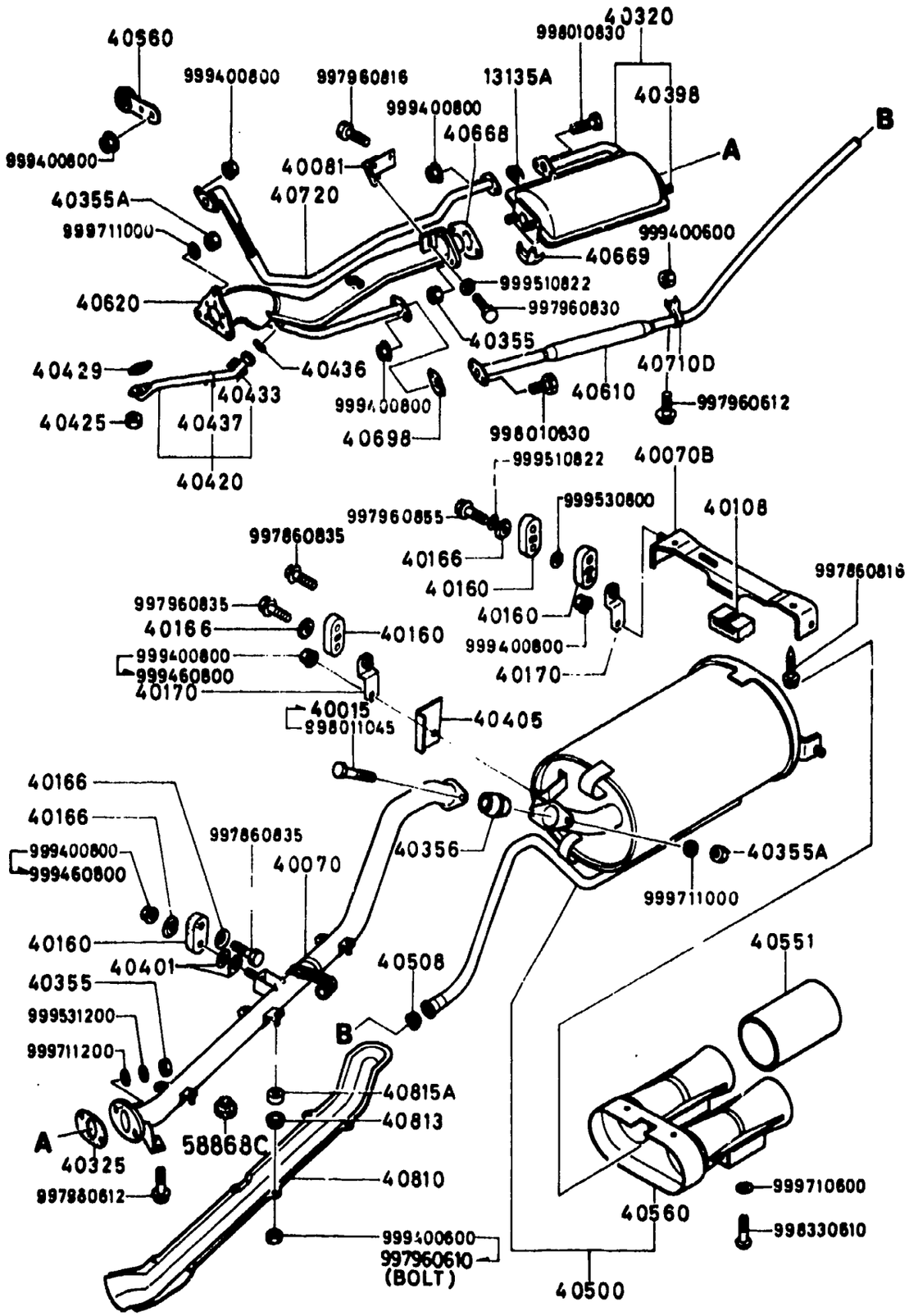

All sound modifying devices listed herein are certified to comply with the California Noise Regulation and Florida Noise Regulation when installed on vehicles.

4000A-1 EX.SYSTEM

D-CODE (Key No.)	PART NAME	PART No.	Qty.	MODEL/DESCRIPTION	VIN (Chassis No.)
13135A	GASKET JOINT EMPAQUE	8527-13-135A	1		
40015	BOLT <A> BOULON PERNO	8545-40-015	2		SA22C .. 502999-
40070	PIPE CONDUIT TUBO	8871-40-200A	1		SA22C .. 500001 -536457
	<A>	8871-40-200B	1		SA22C .. 536458 -566640
		8871-40-200C	1		SA22C .. 566641-
40070B	BRACKET SUPPORT SOPORTE	8871-40-010	1		
40081	BRACKET SUPPORT SOPORTE	8871-40-080	1		
40108	RUBBER,STOP ARRET,C.T.C. GOMA,TOPE	1114-40-108B	1		
40160	HANGER,SILENCER SUPPORT,ECHAPPEMENT SOPORTE, SILENCIADOR	1114-40-160	5		
40166	WASHER RONDELLE ARANDELA	0820-40-166	9		
40170	PLATE PLAQUE PLATO	8871-40-180	3		
40320	BODY,HEAT EXHAUST CORPS,ECH.CHALEUR	8712-40-320	1		
40325	GASKET JOINT EMPAQUE	1259-40-325A	1		
40355	NUT,FLANGE ECROU TUERCA,BRIDA	1259-40-355	4		
40355A	NJT ECROU TUERCA	2158-40-355	5		

4000A EX. SYSTEM

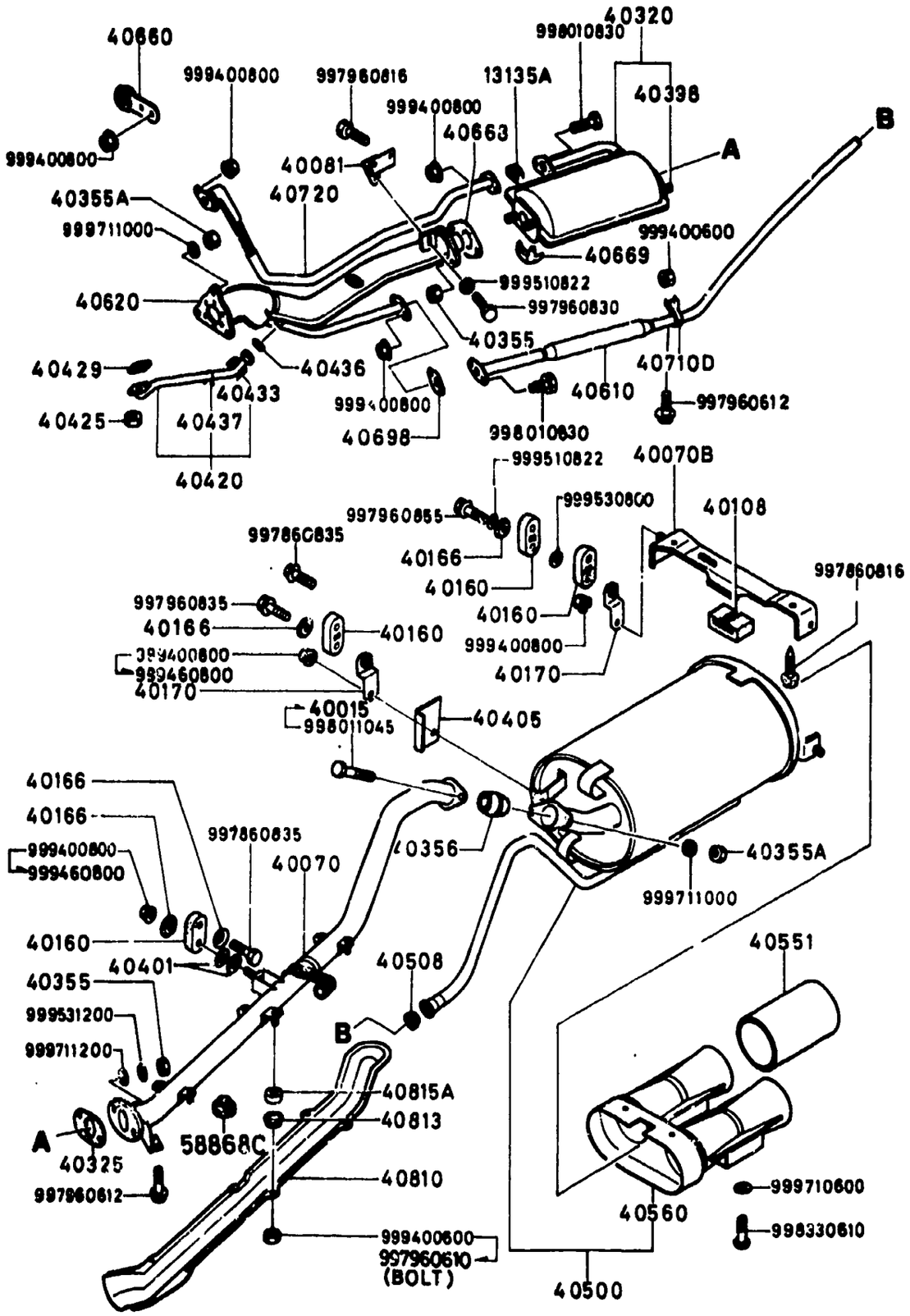

All sound modifying devices listed herein are certified to comply with the California Noise Regulation and Florida Noise Regulation when installed on vehicles.

4000A-2 EX.SYSTEM

D-CODE (Key No.)	PART NAME	PART No.	Qty.	MODEL/DESCRIPTION	VIN (Chassis No.)
40356	GASKET JOINT EMPAQUE	1757-40-356	1		
40398	STUD GOUJON PRISIONERO	1259-40-398	4		
40401	INSULATOR ISOLATEUR AISLADOR SOPORTE	8871-40-401	3		SA22C .. 536458-
40405	INSULATOR ISOLATEUR AISLADOR SOPORTE	8871-40-405	1		SA22C .. 536458 -542268
		8871-40-405A	1		SA22C .. 542269 -549028
40420	PIPE,AIR CONDUIT, AIR TUBO AIRE	8871-40-430	1		
40425	NUT ECROU TUERCA	8501-40-425	2		
40429	GASKET JOINT EMPAQUE	8501-40-429	1		
40433	INSULATOR ISOLATEUR AISLADOR SOPORTE	3648-40-433A	1		
40436	GASKET JOINT EMPAQUE	3743-40-436A	1		
40437	CLIP ATTACHE PRENSA TRABA GAZA	3648-40-437	1		
40500	SILENCER,MAIN POT D'ECHAPPEMENT SILENCIADOR,PRINCIPAL	8871-40-500A	1		SA22C .. 500001 -536457
	<A >	8871-40-500B	1		SA22C .. 536458 -542268
	<A >	8871-40-500C	1		SA22C .. 542269-
40508	RUBBER,JOINT JOINT CAOUTCHOUC GOMA,JUNTA	2090-40-508A	1		

4000A EX. SYSTEM

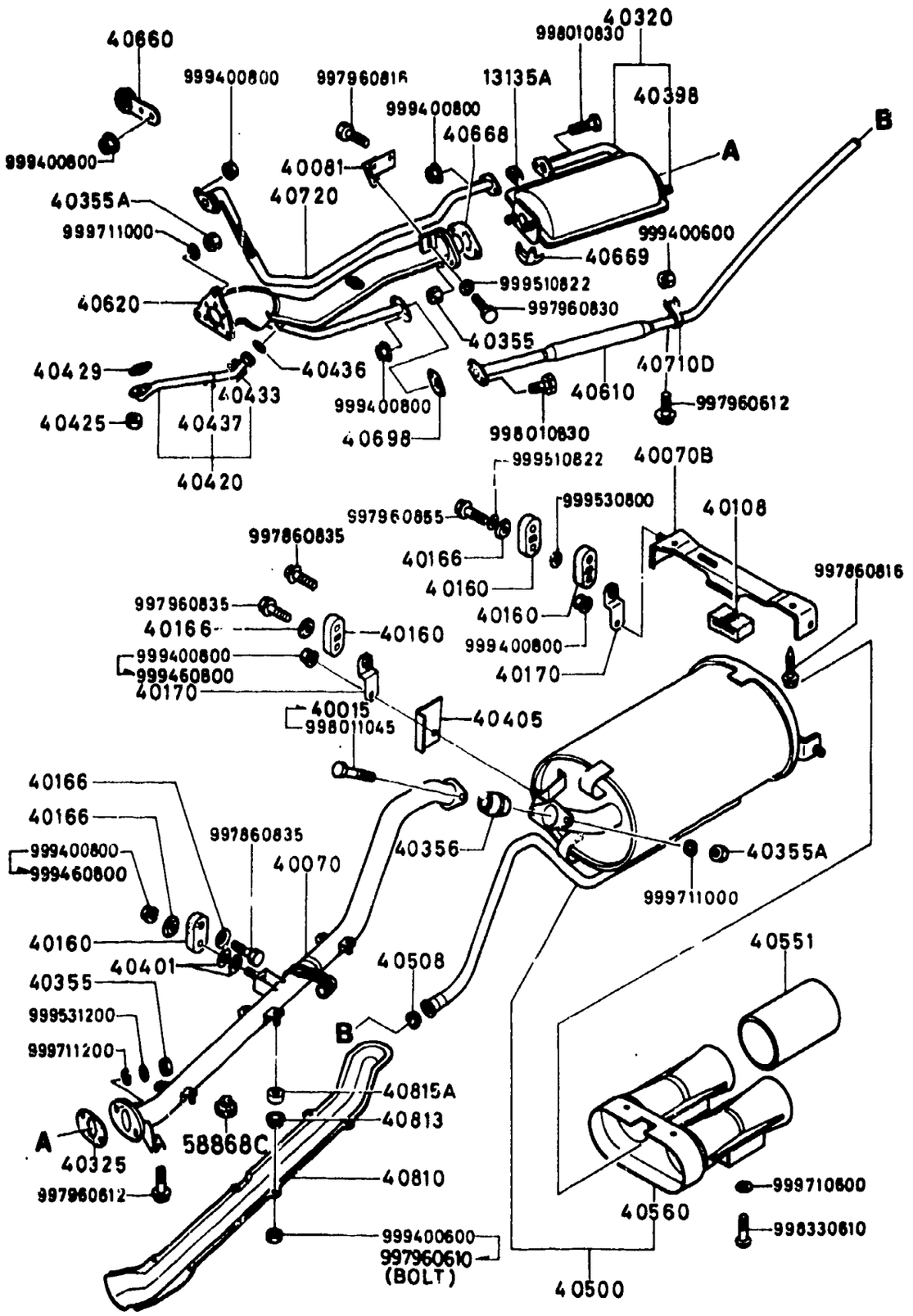

All sound modifying devices listed herein are certified to comply with the California Noise Regulation and Florida Noise Regulation when installed on vehicles.

4000A-3* EX.SYSTEM

D-CODE (Key No.)	PART NAME	PART No.	Qty.	MODEL/DESCRIPTION	VIN (Chassis No.)
40551	COVER CACHE COBERTOR	8871-40-551	2		
40560	FUNNEL CONDUIT	8871-40-560	1		
40610	PIPE,AIR CONDUIT, AIR TUBO AIRE	8871-40-610	1		
40620	DUCT,AIR CONDUIT, AIR CONDUCTO PARA AIRE	8871-40-620A	1		
40660	SUPPORTER SUPPORT SOPORTE	8545-40-660	1		
40668	GASKET JOINT EMPAQUE	1259-40-668A	1		
40669	INSULATOR ISOLATEUR AISLADOR SOPORTE	1259-40-669B	1		
40698	GASKET JOINT EMPAQUE	1259-40-698	1		
40710D	BRACKET ATTACHE SOPORTE,VALVULA RETENCION	8871-40-710	1		
40720	PIPE,AIR CONDUIT, AIR TUBO AIRE	8871-40-740	1		
40810	PROTECTOR NO.1 PROTECTEUR NO 1 PROTECTOR NO.1	8871-40-811	1		
40813	SPACER RONDELLE ESPACIADOR	8545-40-813	4		SA22C .. 500001 -566640
40815A	WASHER RONDELLE ARANDELA	8545-40-815	4		
58868C	PLUG,SERVICE COVER BOUCHON	*0559-58-868	1		SA22C .. 576262-

SECTION NUMBER INDEX (CHASSIS)

STARTING LOCATION	SECTION No.	SECTION NAME
2–C2	2500A	PROPELLER SHAFT
2–D2	2600A	REAR AXLE
2–E2	2610A	REAR BRAKES
2–C3	2700A	DIFFERENTIAL
2–F3	2800A	REAR SUSPENSION
2–C4	3200A	STEERING WHEEL
2–F4	3210A	STEERING GEAR & COLUMN
2–H4	3230A	STEERING LINKAGE
2–C5	3300A	FRONT AXLE & BRAKES
2–H5	3400A	FRONT SUSPENSION
2–K5	3410A	CROSSMEMBER & STABILIZER
2–C6	3700A	TIRE & JACK
2–G6	3900A	ENGINE & T/MISSION MOUNTINGS
2–C7	4000A	EX. SYSTEM
2–C8	4140A	CLUTCH RELEASE & MASTER CYLINDERS (MANUAL)
2–E8	4160A	ACCELERATOR CONTROLS
2–F8	4200A	FUEL TANK
2–C9	4300A	CLUTCH & BRAKE
2–E9	4340A	TANDEM MASTER CYLINDER & VACUUM POWER ASSIST SYSTEM
2–H9	4360A	BRAKE PIPINGS
2–C10	4400A	PARKING BRAKE SYSTEM
2–E10	4500A	FUEL & EVAPORATION PIPINGS
2–H10	4600A	CHANGE CONTROLS (AUTOMATIC)

THE FRAMES IN THIS COLUMN INDICATE :

2---C8	4140A	CLUTCH RELEASE & MASTER CYLINDERS (MANUAL)
2---E8	4160A	ACCELERATOR CONTROLS
2---F8	4200A	FUEL TANK

© 1983 Toyo Kogyo Co., Ltd.
MAY 1983

4140A CLUTCH RELEASE & MASTER CYLINDERS (MANUAL)

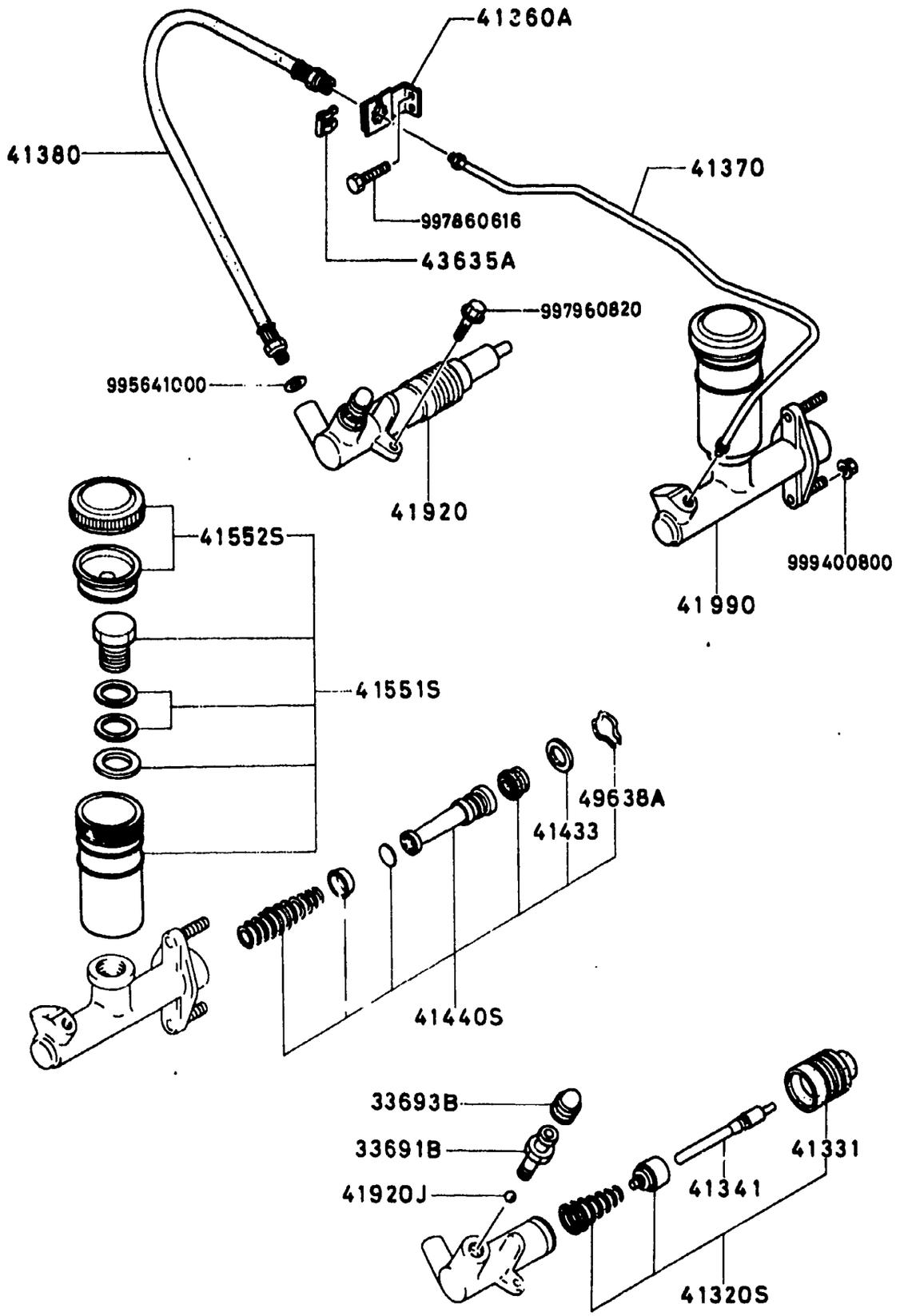

4140A-1 CLUTCH RELEASE & MASTER CYLINDERS (MANUAL)

D-CODE (Key No.)	PART NAME	PART No.	Qty.	MODEL/DESCRIPTION	VIN (Chassis No.)
33691B	SCREW,BLEEDER VIS DE PURGE TORNILLO,PURGADOR	0259-33-691	2		
33693B	CAP,BLEEDER CAPUCHON, VIS DE PURGE TAPA DE VENTILACTION	0259-33-693	1		
41320S	PART SET,REL.CYL JEU DE PIECES INTER.	1052-89-411A	1		
41331	BOOT COIFFE FUNDA	0603-41-331	1		
41341	ROD TIGE VARILLA	4084-41-341	1		
41360A	HOLDER SUPPORT SOSTEN	8871-41-370	1		
41370	PIPE,CLUTCH CONDUIT, EMBRAYAGE TUBO EMBRAGUE	8871-45-510A	1		SA22C .. 500001 -547088
		8871-45-510B	1		SA22C .. 547089-
41380	HOSE,FLEXIBLE DURITE FLEXIBLE MANGUERA, FLEXIBLE	0304-43-820	1		
41433	WASHER,PISTON STOP RONDELLE DE PISTON FREIN	0111-43-433	1		SA22C .. 500001 -522141
41440S	PART SET,CLUTCH CYL. JEU DE PIECES INTER.	0839-89-431B	1		SA22C .. 500001 -522141
		8173-89-431	1		SA22C .. 522142-
41551S	TANK SET,RESERVE RESERVOIR ASSEMBLE, RESER	0317-89-435B	1		SA22C .. 500001 -522141
		8173-89-435	1		SA22C .. 522142-
41552S	CAP SET,RESERVE TANK BOUCHON RESERVOIR RESERVE	0317-89-436A	1		SA22C .. 500001 -522141
		1363-89-436	1		SA22C ..

4140A CLUTCH RELEASE & MASTER CYLINDERS (MANUAL)

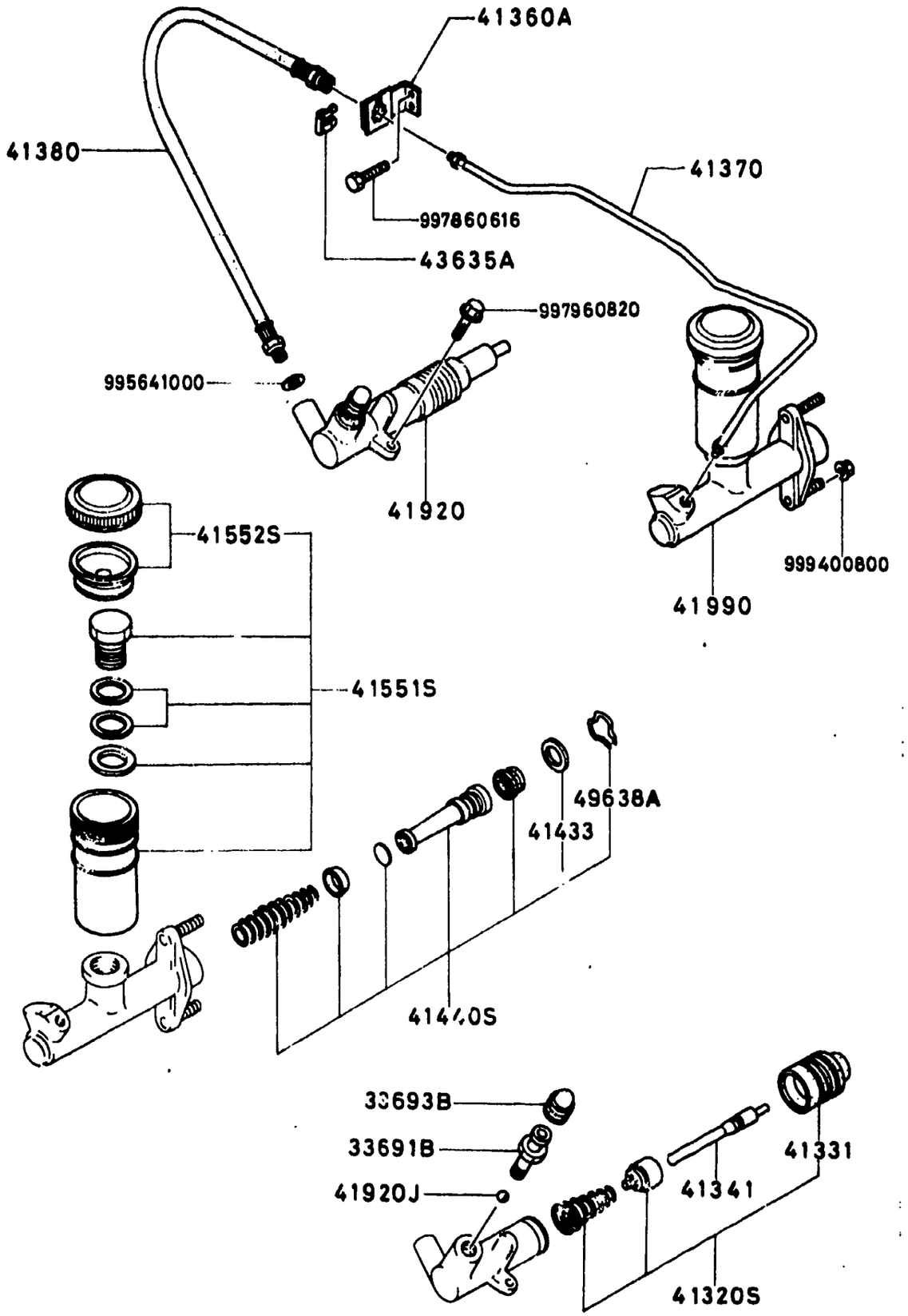

4140A-2* CLUTCH RELEASE & MASTER CYLINDERS (MANUAL)

D-CODE (Key No.)	PART NAME	PART No.	Qty.	MODEL/DESCRIPTION	VIN (Chassis No.)
41552S CONT'D		1363-89-436			522142-
41920	CYL.,CLUTCH RELEASE CYLINDRE, RECEPTEUR, EMBR LIBERADOR DEL CLUCHT	8541-41-920	1		
41920J	BALL,STEEL BILLE D'ACIER BILLE D'ACIER	9961-11-500	1		
41990	CYL.,CLUTCH MASTER MAITRE CYLINDRE, EMBRAYAG CIL.DE MANDO DE EMBRAGUE	8871-41-400A	1		SA22C .. 500001 -547088
		8980-41-400A	1		SA22C .. 547089-
43635A	CLIP,FLEXIBLE HOSE ATTACHE, CONDUIT FLEXIBLE PRENSA PARA MANGUERA FLEX	0136-43-635	1		
49638A	WIRE,STOP FIL ARRETOIR	0111-43-432	1		SA22C .. 500001 -522141
		8173-41-432	1		SA22C .. 522142-

4160A ACCELERATOR CONTROLS

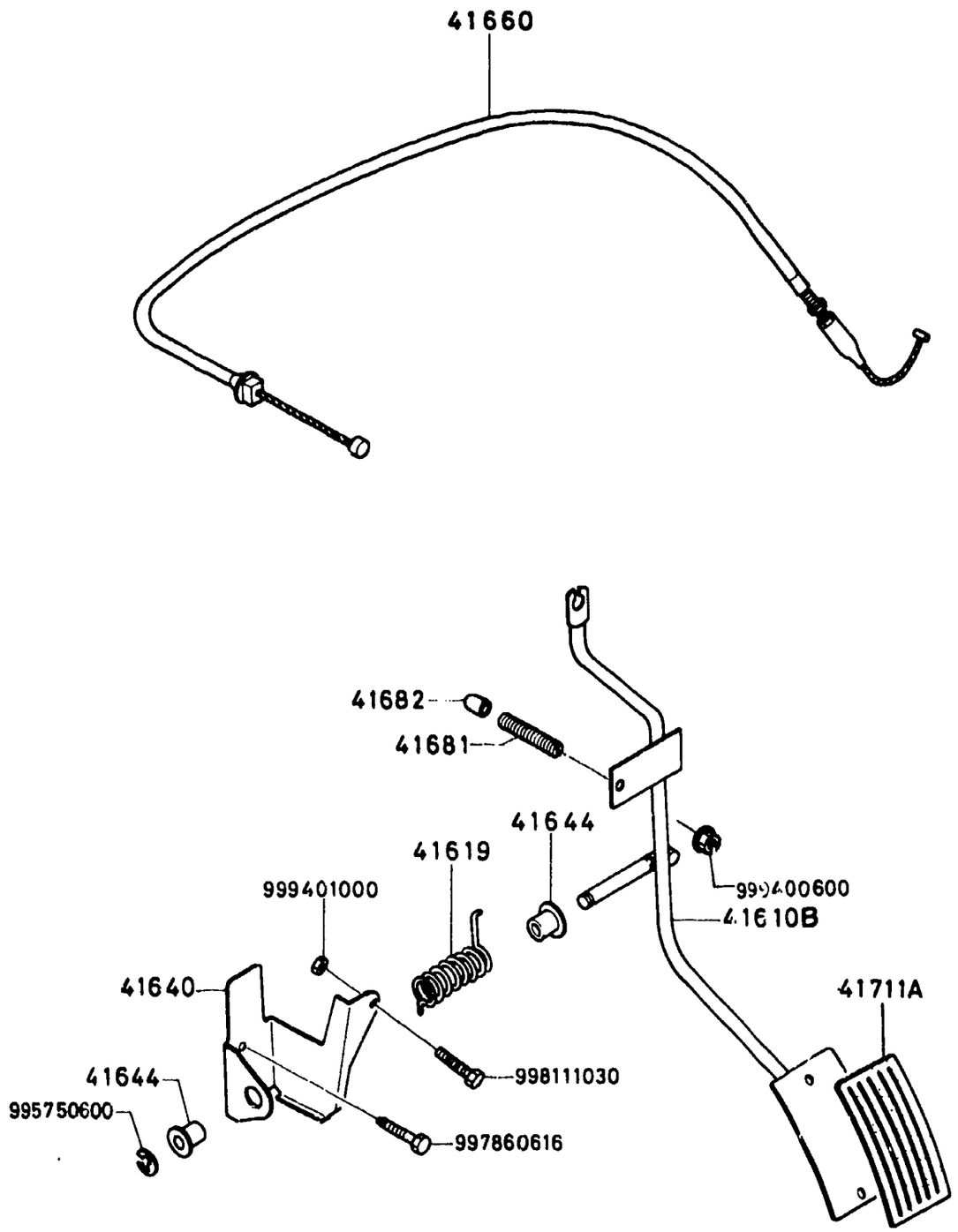

4160A-1* ACCELERATOR CONTROLS

D-CODE (Key No.)	PART NAME	PART No.	Q'ty.	MODEL/DESCRIPTION	VIN (Chassis No.)
41610B	PEDAL & ARM PEDALE & BRAS	8871-41-610	1		SA22C .. 500001 -531148
		8871-41-610A	1		SA22C .. 531149-
41619	SPRING,RETURN RESSORT DE RAPPEL RESORTE,RETORNO	0824-41-619	1		SA22C .. 500001 -531148
		8239-41-619	1		SA22C .. 531149-
41640	RETAINER,ROD SUPPORT DE LEVIER RETENTOR,VARILLA	3597-41-650A	1		
41644	BUSH BUSELURE BUJE	0259-41-644	2		
41660	WIRE,ACCELERATOR CABLE D'ACCELERATEUR CABLE,ACELERADOR	3743-41-660C	1		
41681	STOPPER ARRETOIR TAPON	0118-41-681	1		
41682	RUBBER,STOP ARRET,C.T.C. GOMA,TOPE	0118-41-682	1		
41711A	PAD,ACCEL.PEDAL C.T.C. PEDALE ACCEL.	8871-41-711	1		SA22C .. 500001 -531148
		8871-41-711A	1		SA22C .. 531149-

4200A FUEL TANK

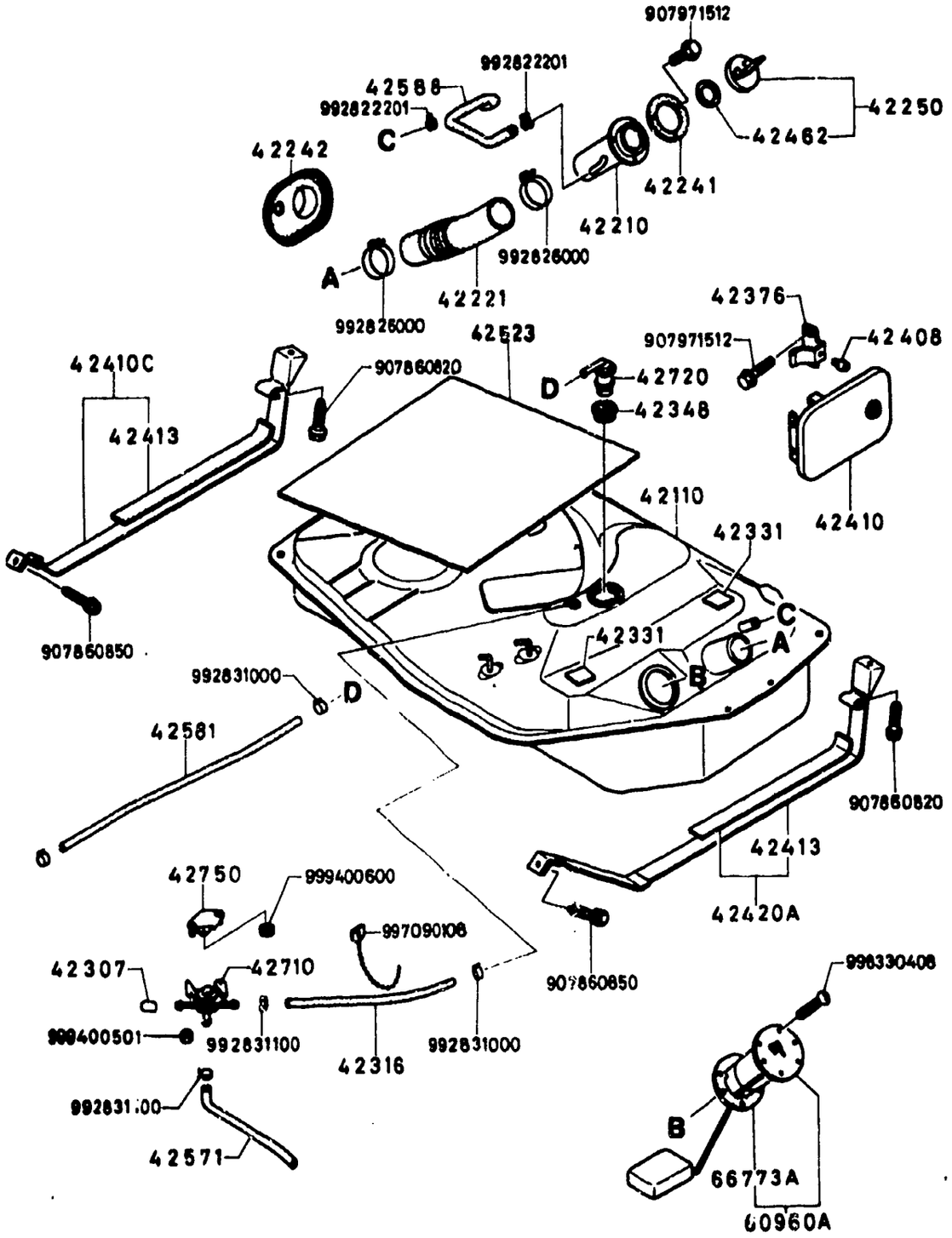

4200A-1 FUEL TANK

D-CODE (Key No.)	PART NAME	PART No.	Qty.	MODEL/DESCRIPTION	VIN (Chassis No.)
42110	TANK,FUEL RESERVOIR D'ESSENCE DEPOSITO,GASOLINA	8973-42-110C	1		
42210	PIPE,FILLER PIPE DE REMPLISSAGE TUBO LLENADO	8871-42-210	1		SA22C .. 500001 -500400
	<A>	8871-42-210A	1		SA22C .. 500401 -520637
		8871-42-210B	1		SA22C .. 520638-
42221	HOSE,FILLER DURITE DE REMPLISSAGE MANGUERA, LLENADORA	8344-42-241	1	80 MODEL	SA22C .. 568501-
		8871-42-241	1	79 MODEL	SA22C .. 500001 -568500
42241	GASKET,FILLER PIPE <AN> JOINT, PIPE DE REMPLIQSAG EMPAQUE, TUBO LLENADOR	0866-42-366A	1		SA22C .. 588207-
		8545-42-245	1		SA22C .. 500001 -520637
		8871-42-235	1		SA22C .. 520638 -588206
42242	RUBBER,SEAL JOINT CAOUTCHOUC GOMA,SELLO	8871-42-242A	1		
42250	CAP,FILLER BOUCHON, REMPLIS. HUILE TAPA DE LIENADO	8871-42-250A	1		SA22C .. 500001 -514847
	<A>	8871-42-250B	1		SA22C .. 514848-
42307	CAP BOUCHON TAPA	0223-42-307	1		
42316	HOSE,VENT CONDUITE D'AIR	9934-60-6350	1	(ORD.BY 9934906750) 79 MODEL	SA22C .. 500001 -568500
		9935-70-6350	1	(ORD.BY 9935106999) 80 MODEL	SA22C .. 568501-

4200A FUEL TANK

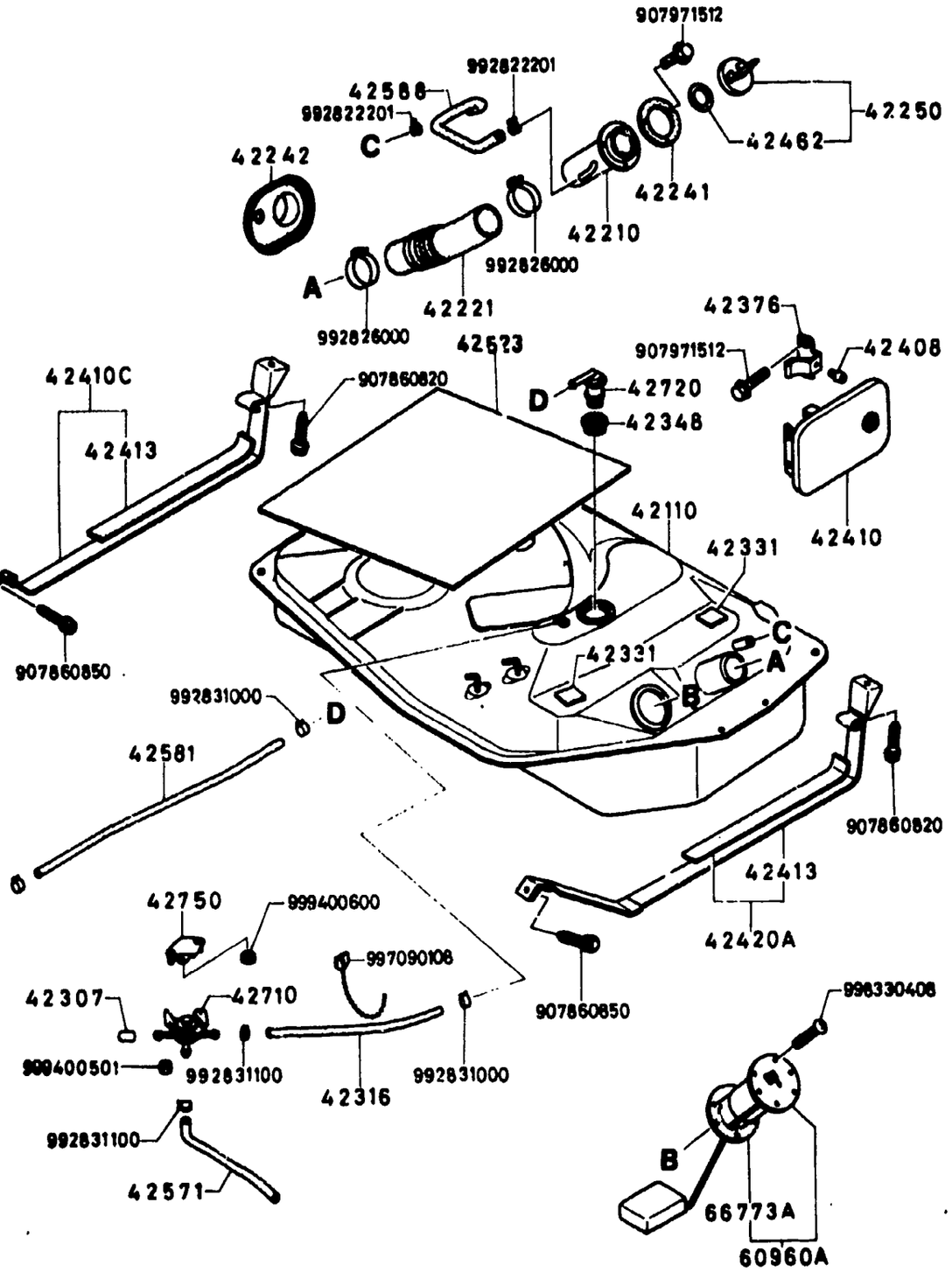

4200A-2 FUEL TANK

D-CODE (Key No.)	PART NAME	PART No.	Qty.	MODEL/DESCRIPTION	VIN (Chassis No.)
42331	SEAT SIEGE ASIENTO	8531-42-761	2		
42348	GROMMET PROTECTEUR ANILLO PROTECTOR	3870-42-725	1		
42376	PLATE,LOCK PLAQUE DE FIXATION PLACA - CIERRE	8531-42-451	1		
42408	STOPPER,FILLER LID TAMPON CTC COUVERCLE	8871-70-491	2		
42410	LID,FUEL FILLER COUVERCLE ESSENCE	8871-42-410A	1		
42410C	BAND(R),TANK FIX. COLLIER(D)RESERVOIR	8871-42-710A	1		
42413	SEAT SIEGE ASIENTO	8871-42-745	2		
42420A	BAND(L),TANK FIX. COLLIER(G)RESERVOIR.	8871-42-720	1		
42462	GASKET,CAP JOINT DE BOUCHON EMPAQUE, TAPA	8871-42-365	2		
42523	PAD,FUEL TANK ISOLATEUR,RESERVOIR ESSEN TACO DE GOMA TANQUE GASOL	8871-42-761	1		
42571	HOSE,VENT CONDUITE D'AIR	8871-42-571	1		SA22C .. 500001 -500400
	<A >	8871-42-571A	1		SA22C .. 500401-
42581	HOSE,BREATHER TUYAU RENIFLARD	9934-60-6420	1	(ORD.BY 9934906750) 79 MODEL	SA22C .. 500001 -568500
		9935-70-6420	1	(ORD.BY 9935106999) 80 MODEL	SA22C .. 568501-
42588	HOSE,VENT	8344-42-245	1	80 MODEL	SA22C ..

4200A FUEL TANK

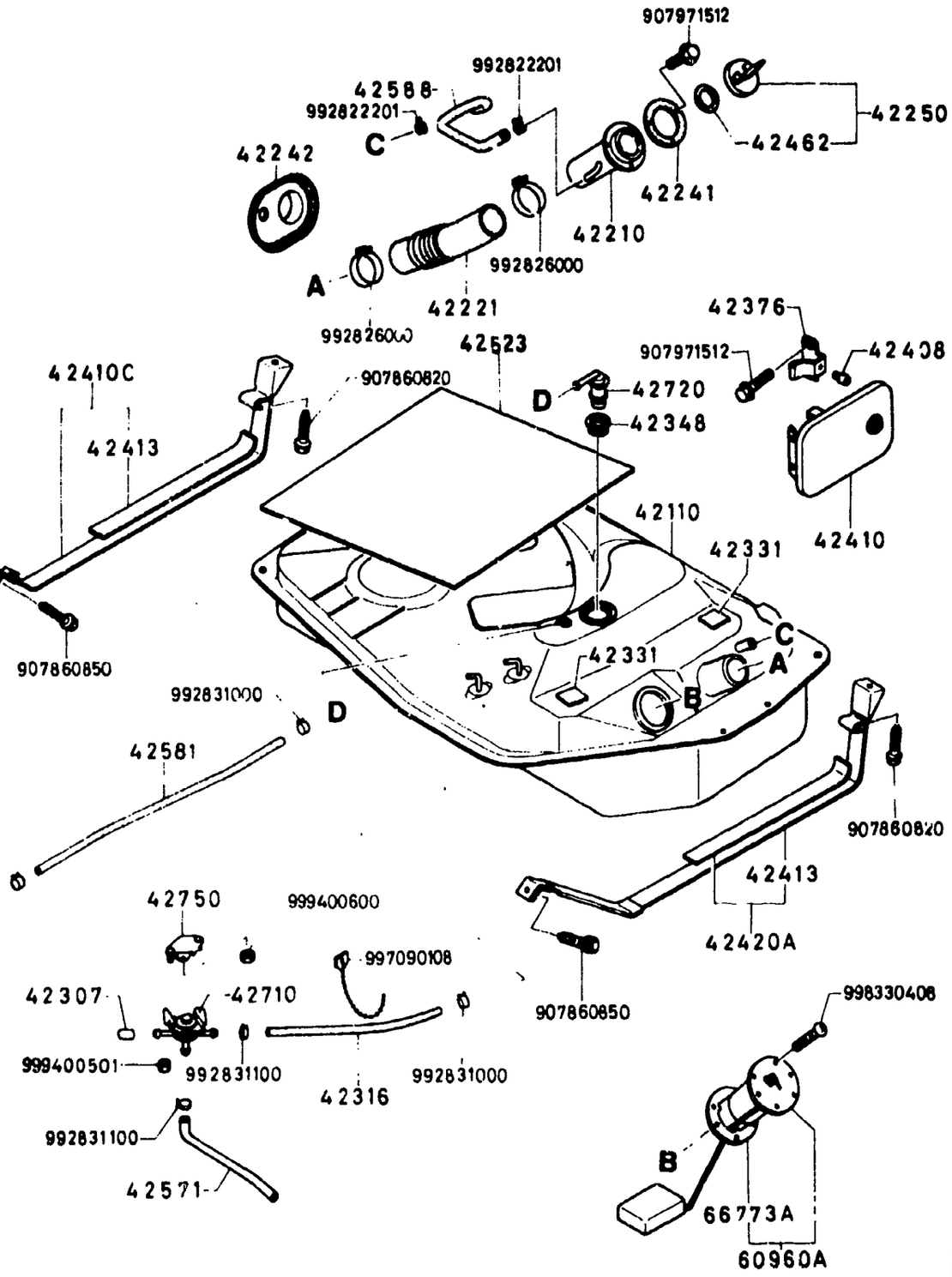

4200A-3* FUEL TANK

D-CODE (Key No.)	PART NAME	PART No.	Qty.	MODEL DESCRIPTION	VIN (Chassis No.)
42588 CONT'D	CONDUITE D'AIR	8344-42-245			568501-
		8871-42-245	1	79 MODEL	SA22C .. 500001 -568500
42710	VALVE,CHECK SOUPAPE DE RETENUE VALVULA,RETENCION	8341-42-910	1	80 MODEL	SA22C .. 568501-
		8767-42-910	1	79 MODEL	SA22C .. 500001 -568500
42720	VALVE-FUEL VAPOR. SOUPAPE VAPOR.ESSENCE	3870-42-720A	1		
42750	BRACKET,CHECK VALVE ATTACHE SOPORTE,VALVULA RETENCION	8871-42-720	1		
60960A	GAUGE,FUEL TANK JAUGE, RESERVOIR ESSENCE MANOMETRO, TANQUE COMBUST	8871-60-960	1		SA22C .. 500001 -559739
	<A>	8871-60-960A	1		SA22C .. 559740-
66773A	GASKET,GAUGE JOINT DE JAUGE	8871-60-962	1		SA22C .. 500001 -559739
		8871-60-962A	1		SA22C .. 559740-

SECTION NUMBER INDEX (CHASSIS)

STARTING LOCATION	SECTION No.	SECTION NAME
2–C2	2500A	PROPELLER SHAFT
2–D2	2600A	REAR AXLE
2–E2	2610A	REAR BRAKES
2–C3	2700A	DIFFERENTIAL
2–F3	2800A	REAR SUSPENSION
2–C4	3200A	STEERING WHEEL
2–F4	3210A	STEERING GEAR & COLUMN
2–H4	3230A	STEERING LINKAGE
2–C5	3300A	FRONT AXLE & BRAKES
2–H5	3400A	FRONT SUSPENSION
2–K5	3410A	CROSSMEMBER & STABILIZER
2–C6	3700A	TIRE & JACK
2–G6	3900A	ENGINE & T/MISSION MOUNTINGS
2–C7	4000A	EX. SYSTEM
2–C8	4140A	CLUTCH RELEASE & MASTER CYLINDERS (MANUAL)
2–E8	4160A	ACCELERATOR CONTROLS
2–F8	4200A	FUEL TANK
2–C9	4300A	CLUTCH & BRAKE
2–E9	4340A	TANDEM MASTER CYLINDER & VACUUM POWER ASSIST SYSTEM
2–H9	4360A	BRAKE PIPINGS
2–C10	4400A	PARKING BRAKE SYSTEM
2–E10	4500A	FUEL & EVAPORATION PIPINGS
2–H10	4600A	CHANGE CONTROLS (AUTOMATIC)

THE FRAMES IN THIS COLUMN INDICATE :

2---C9	4300A	CLUTCH & BRAKE
2---E9	4340A	TANDEM MASTER CYLINDER & VACUUM POWER ASSIST SYSTEM
2--H9	4360A	BRAKE PIPINGS

© 1983 Toyo Kogyo Co., Ltd.
MAY 1983

4300A CLUTCH & BRAKE

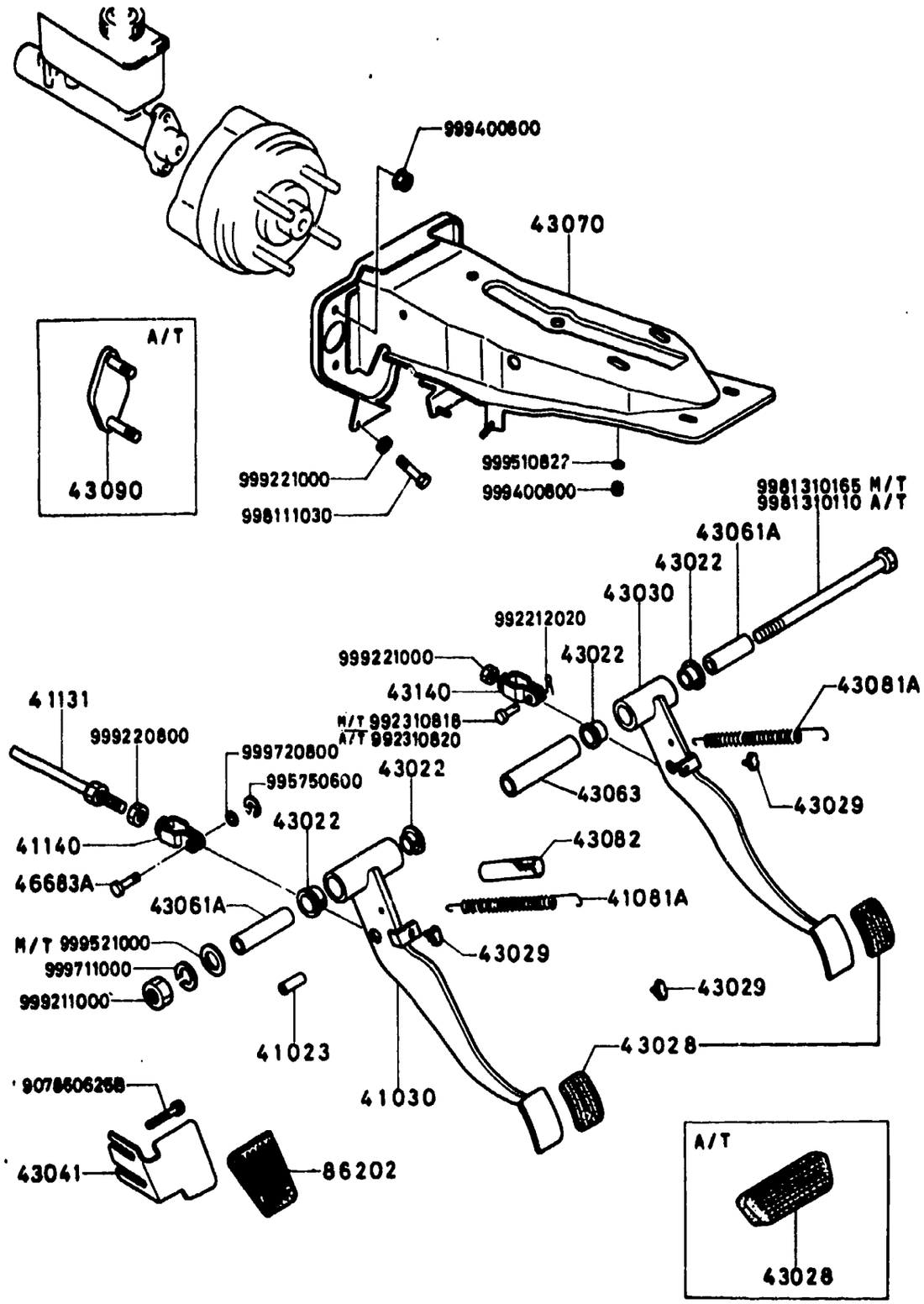

4300A-1 CLUTCH & BRAKE

D-CODE (Key No.)	PART NAME	PART No.	Qty.	MODEL/DESCRIPTION	VIN (Chassis No.)
41023	BUSH,CLUTCH PEDAL ARTICULATION, PEDALE EMBR BUJE,PEDAL EMBRAGUE	0727-41-023	1	M/T	
41030	PEDAL,CLUTCH PEDALE D'EMBRAYAGE PEDAL EMBRAGUE	8871-41-030	1	M/T	
41081A	SPRING,RETURN RESSORT DE RAPPEL RESORTE,RETORNO	0088-41-352A	1	M/T	
41131	ROD,PUSH POUSSOIR VARILLA DE EMPUJE	0727-41-131	1	M/T	
41140	FORK,CLUTCH FOURCHETTE, EMBRAYAGE HORQUILLA DEL EMBRAGUE	0259-43-140	1	M/T	
43022	BUSH,PEDAL BUSELURE PEDALE	1015-46-085	2 4	A/T M/T	
43028	PAD,PEDAL PATIN,PEDALE GOMA CUBREPEDAL	0225-43-028A	1	A/T	
		8871-43-028	2	M/T	SA22C .. 500001 -510838
		8871-43-028A	2	M/T	SA22C .. 510839-
43029	RUBBER,STOPPER BUTTOIR,C.T.C. GOMA,PARANTE	0187-43-029	1 3	A/T M/T	
43030	PEDAL,BRAKE PEDALE DE FREIN PEDAL FRENO	1308-43-030A	1	M/T	
		8872-43-030	1	A/T	
43041	REST,FOOT REPOSE-PIED	8871-43-041	1		SA22C .. 500001 -531148
		8871-43-041A	1		SA22C .. 531149-
43061A	PIPE,PEDAL BUSELURE PEDALE	0866-43-062	1 2	A/T M/T	
43063	SPACER RONDELLE	0866-43-063	1		

4300A CLUTCH & BRAKE

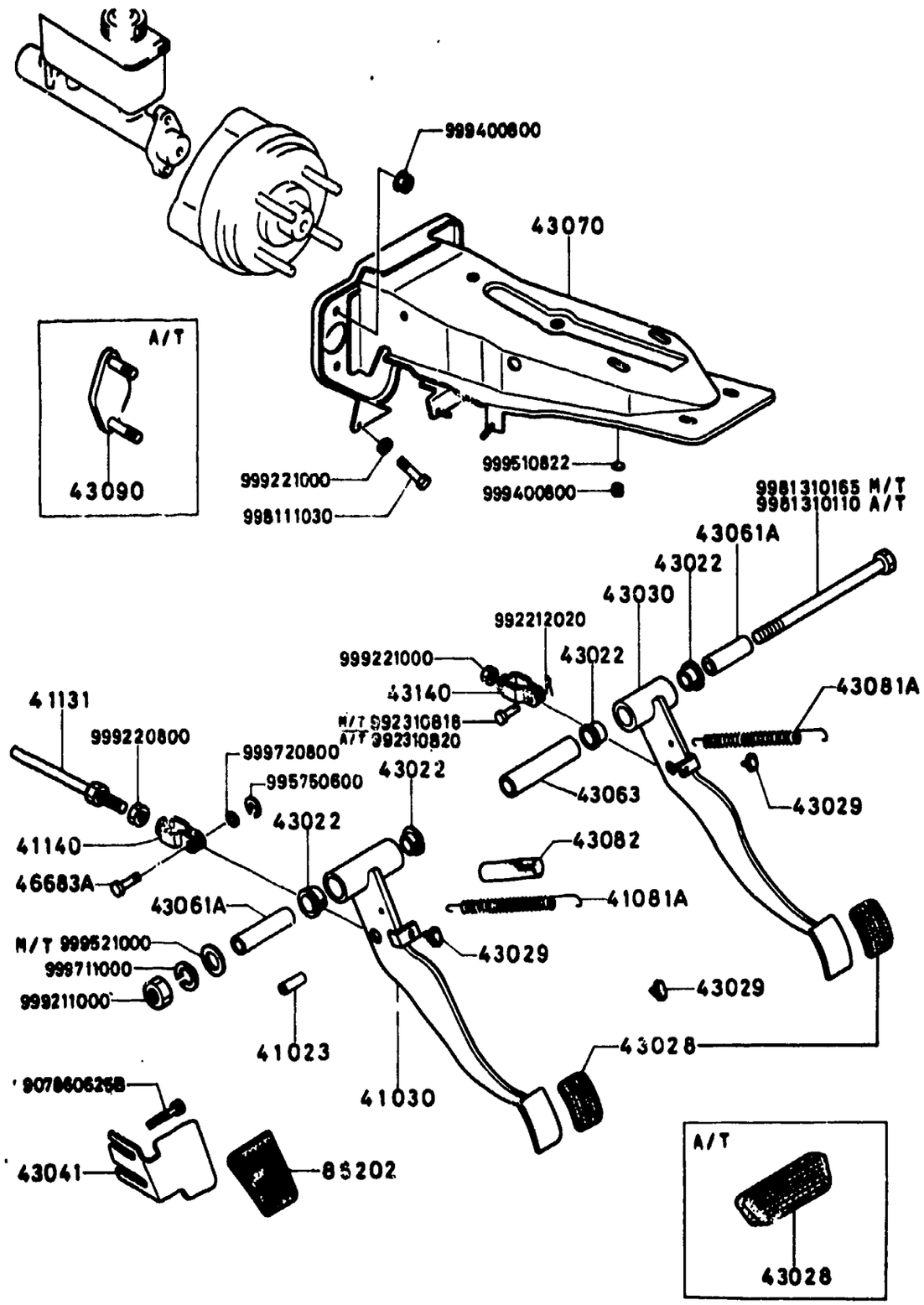

4300A-2* CLUTCH & BRAKE

D-CODE (Key No.)	PART NAME	PART No.	Qty.	MODEL/DESCRIPTION	VIN (Chassis No.)
43063 CONT'D	ESPACIADOR	0866-43-063			
43070	BRACKET,MASTER CYL. ATTACHE, MAITRE CYLINDRE SOPORTE,CILINDRO MAESTRO	8871-43-070A	1		SA22C .. 500001 -520637
		8871-43-070B	1		SA22C .. 520638-
43081A	SPRING,RETURN-BRAKE RESSORT DE RAPPEL FREIN	0088-41-352A	1		
43082	PROTECTOR,SPRING GAINE, RESSORT PROTECTOR RESORTE	1011-43-082	1	M/T	SA22C .. 500001 -566640
		1011-43-082A	1	M/T	SA22C .. 566641-
43090	PLATE PLAQUE PLATO	8872-43-090	1	A/T	
43140	FORK,BRAKE FOURCHETTE DE FREIN HORQUILLA PARA FRENO	0305-43-140	1	M/T	
		1524-43-140	1	A/T	
46683A	PIN CLAVETTE PASADOR	0223-46-683	1	M/T	
86202	PAD,FOOT REST COUSSINET REPOSE-PIED	1243-86-202	1		SA22C .. 500001 -531148
		8871-43-042	1		SA22C .. 531149-

4340A TANDEM MASTER CYLINDER & VACUUM POWER ASSIST SYSTEM

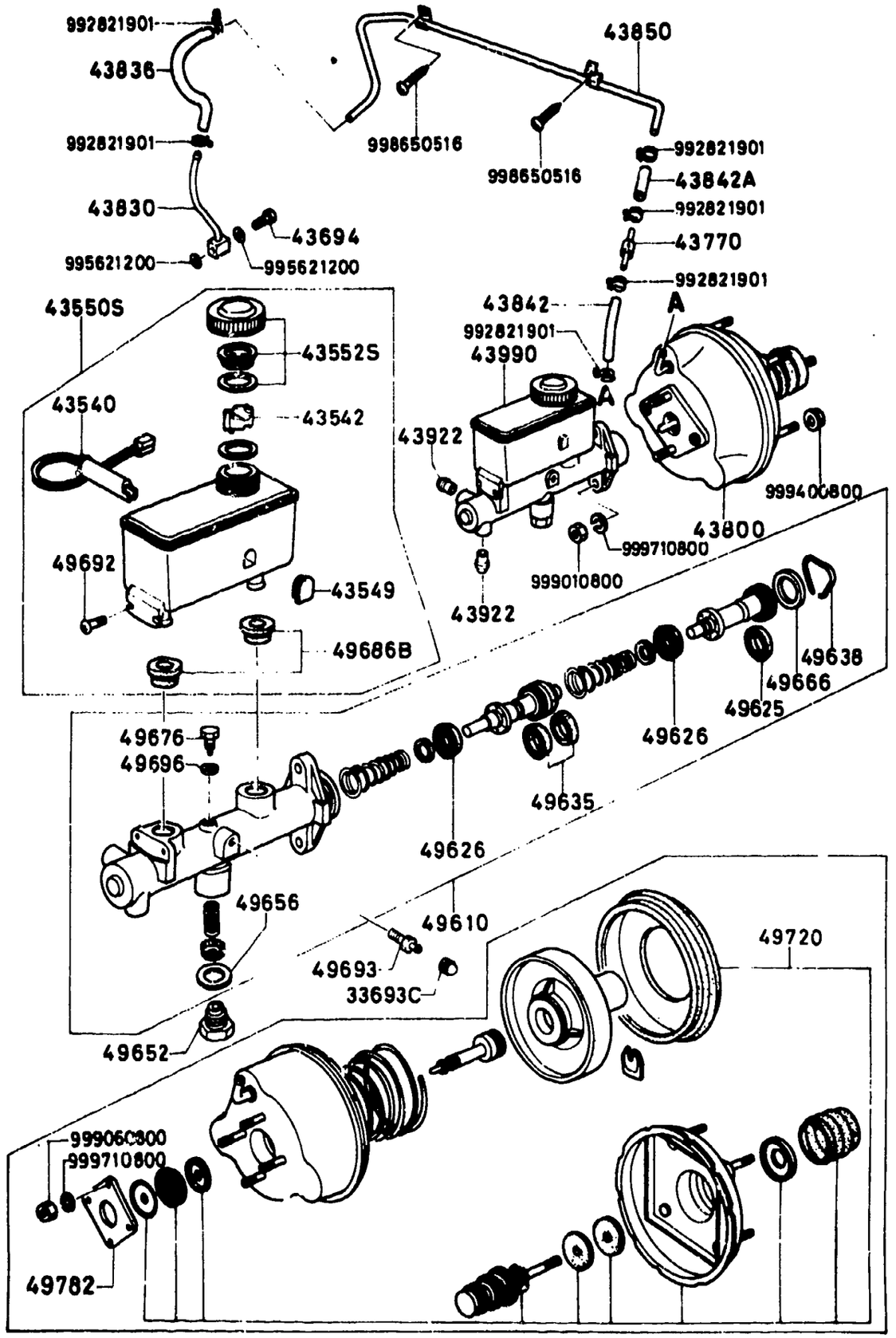

4340A-1 TANDEM MASTER CYLINDER & VACUUM POWER ASSIST SYSTEM

D-CODE (Key No.)	PART NAME	PART No.	Qty.	MODEL/DESCRIPTION	VIN (Chassis No.)
33693C	CAP,BLEEDER SCREW BOUCHON PURGEUR	0259-33-693	1		
43540	INDICATOR,LEVEL INDICATEUR DE NIVEAU	3597-43-540	1		
43542	FLOAT FLOTTEUR FLOTADOR	8531-43-542	1		
43549	CAP,RESERVE TANK BOUCHON RESERVOIR AUXIL.	3597-43-549	1		SA22C .. 500001 -504976
43550S	TANK SET,RESERVE RESERVOIR ASSEMBLE, RESER	3597-89-435	1		SA22C .. 500001 -522602
		3597-89-435A	1		SA22C .. 522603-
43552S	CAP SET,RESERVE TANK BOUCHON RESERVOIR RESERVE	0317-89-436A	1		
43694	BOLT,CONNECTOR BOULON DE RACCORD PERNO CONECTOR	1570-43-694A	1		
43770	VALVE,CHECK SOUPAPE DE RETENUE VALVULA,RETENCION	0233-43-770	1		
43800	VACUUM POWER ASSIST SERVO-FREIN	8871-43-800A	1	79 MODEL	SA22C .. 500001 -568500
		8980-43-800	1	80 MODEL	SA22C .. 568501-
43830	PIPE,VACUUM CONDUIT A VIDE TUBO VACIO	8871-43-830A	1		
43836	HOSE,VACUUM DURITE DE DEPRESSION MANGUERA, VACIO	8871-43-836	1		
43842	HOSE,VACUUM DURITE DE DEPRESSION MANGUERA, VACIO	2067-43-842A	1		
43842A	HOSE,VACUUM DURITE DE DEPRESSION MANGUERA, VACIO	2192-43-835	1		

4340A TANDEM MASTER CYLINDER & VACUUM POWER ASSIST SYSTEM

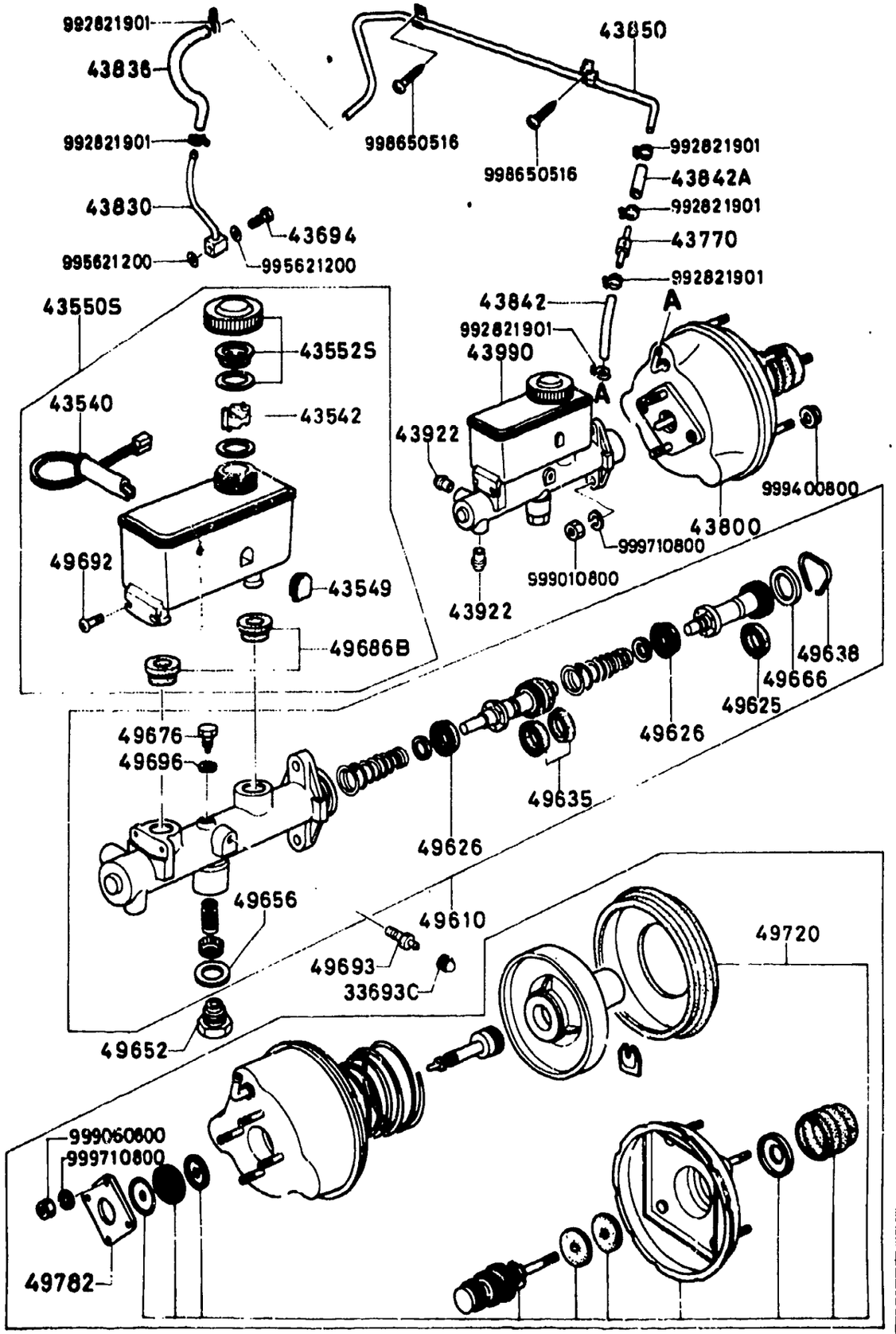

4340A-2 TANDEM MASTER CYLINDER & VACUUM POWER ASSIST SYSTEM

D-CODE (Key No.)	PART NAME	PART No.	Qty.	MODEL/DESCRIPTION	VIN (Chassis No.)
43850	PIPE,VACUUM CONDUIT A VIDE TUBO VACIO	8871-43-840	1		
43922	SEAT-TUBE SIEGE	0613-26-922	2		
43990	CYL.,TANDEM MASTER MAITRE CYLINDRE, SERVO CILINDRO MAESTRO	8871-43-400A	1	79 MODEL	SA22C .. 500001 -568500
		8980-43-400	1	80 MODEL	SA22C .. 568501-
49610	PART SET,BRAKE CYL. NECESSAIRE DE REPARATION JGO.DE REPARACION	8562-49-610	1		
49625	CUP,SECONDARY COUPELLE, SECONDAIRE COPA SECUNDARIA	1128-49-625	1		
49626	CUP,PRIMARY COUPELLE, PRIMAIRE COPA PRIMARIA	1128-49-626	2		
49635	CUP,FLOATING CUVETTE	1128-49-635	2		
49638	WIRE,STOP-MA.CYL. CALE DE PISTON CABLE,STOP PISTON	0305-49-638	1		
49652	BOLT,JOINT BOULON PERNO,JUNTA	0512-49-652	1		
49656	GASKET,JOINT BOLT JOINT EMPAQUE, PERNO DE UNION	0305-49-656	1		
49666	WASHER,STOP RONDELLE D'ARRET	0305-49-666	1	(T=2.00)	
		0512-49-667	1	(T=2.25)	
		0512-49-668	1	(T=2.50)	
		8871-49-669	1	(T=2.75)	SA22C .. 510189-
49676	BOLT,SET	0512-49-676		('A')	

4340A TANDEM MASTER CYLINDER & VACUUM POWER ASSIST SYSTEM

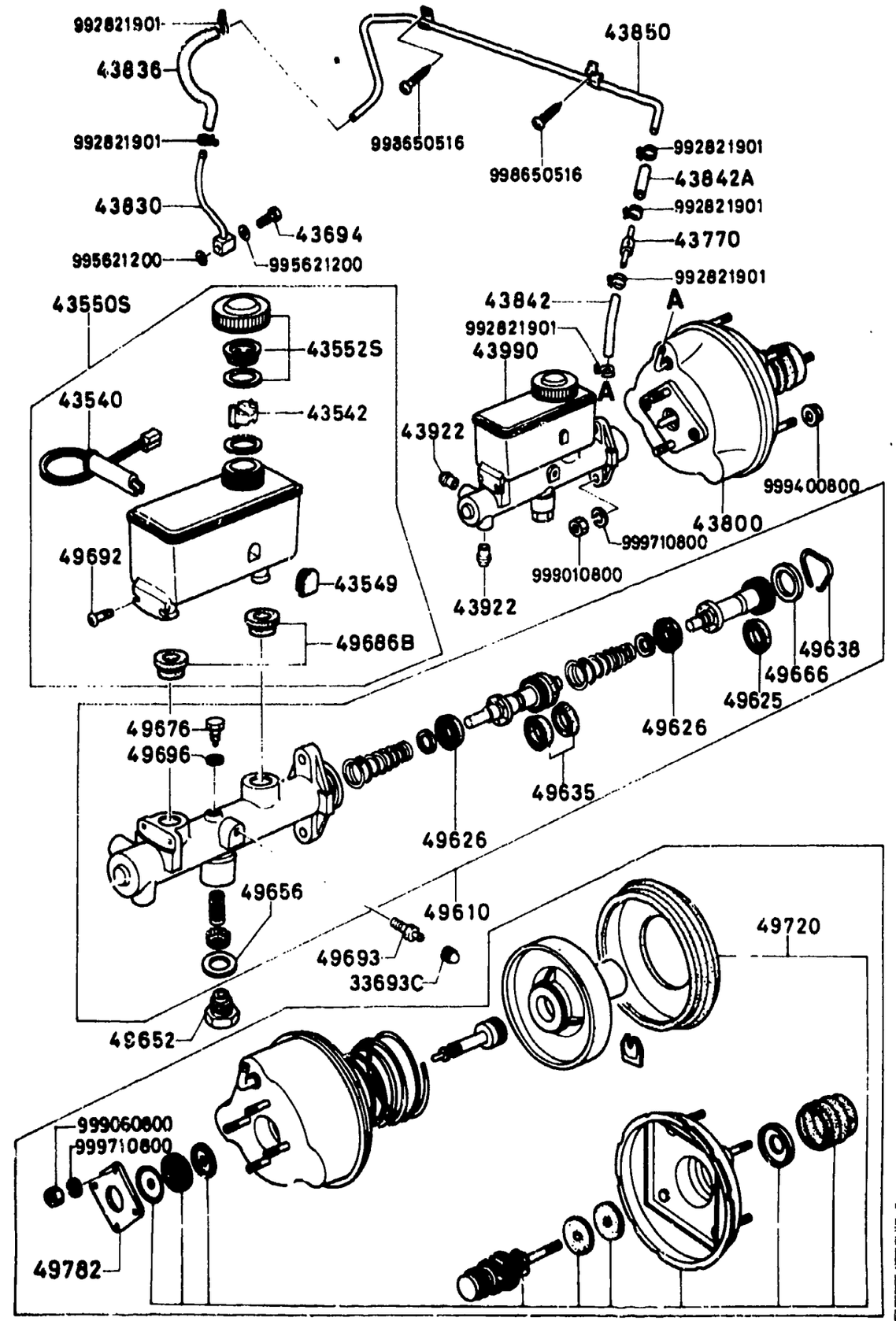

4340A-3* TANDEM MASTER CYLINDER & VACUUM POWER ASSIST SYSTEM

D-CODE (Key No.)	PART NAME	PART No.	Qty.	MODEL/DESCRIPTION	VIN (Chassis No.)
49676 CONT'D	BOULON,JEU PERNOS,JUEGO	0512-49-676	1		SA22C .. 500001 -502745
		0512-49-677	1	('B')	SA22C .. 500001 -502745
		0512-49-678	1	('C')	SA22C .. 500001 -502745
		1363-49-676	1	('A')	SA22C .. 502746-
		1363-49-677	1	('B')	SA22C .. 502746-
		1363-49-678	1	('C')	SA22C .. 502746-
		6871-49-679	1	('D')	SA22C .. 510189-
49686B	BUSH,ELBOW JOINT BUSELURE BUJE	0305-49-686B	2		
49692	BOLT,TANK SET BOULON,RESERVOIR	0391-49-692	2		SA22C .. 500001 -522602
49693	VALVE,BLEEDER SOUPAPE DE PURGE	0421-49-693	1		
49696	GASKET,SET BOLT JOINT JEU AXES	0512-49-696	1		SA22C .. 500001 -502745
		9954-10-0603	1		SA22C .. 502746-
49720	REPAIR KIT NECESSAIRE DE REPARATION JGO.DE REPARACION	8056-49-720	1	79 MODEL	SA22C .. 500001 -568500
		8980-49-720	1	80 MODEL	SA22C .. 568501-
49782	FLANGE	0824-49-782	1		

4360A BRAKE PIPINGS

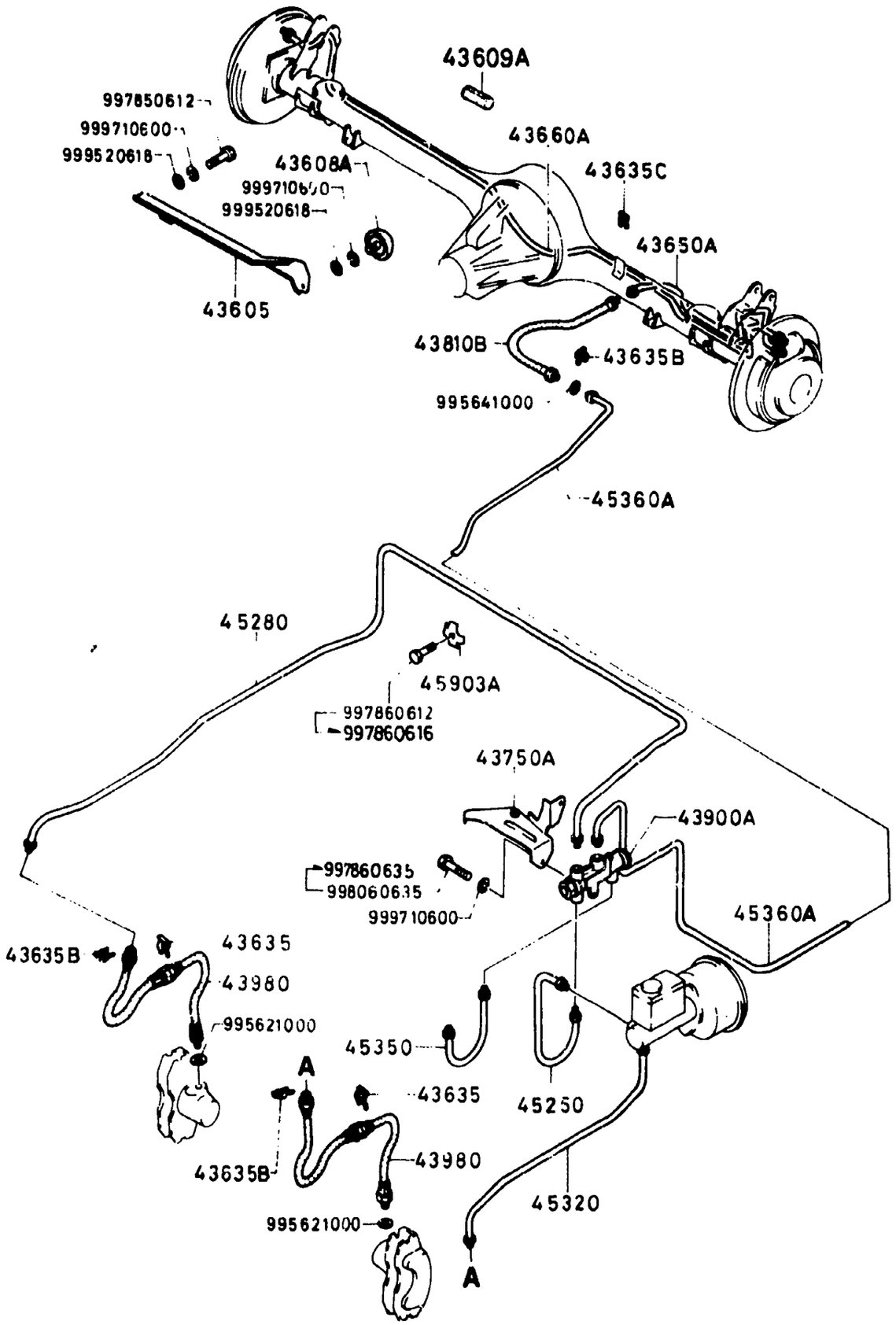

4360A-1 BRAKE PIPINGS

D-CODE (Key No.)	PART NAME	PART No.	Qty.	MODEL DESCRIPTION	VIN (Chassis No.)
43605	PROTECTOR,BRAKE PIPE PROTECTEUR, CONDUIT FREIN PROTECTOR BOMBA DE FRENO	8871-43-785A	1		
43608A	SCREW,RUBBER VIS	8871-43-608	1		
43609A	PROTECTOR,BRAKE PIPE (AN> PROTECTEUR, CONDUIT FREIN PROTECTOR BOMBA DE FRENO	*8595-43-609	7		SA22C .. 627593-
		8912-43-609	7		SA22C .. 569399 -627592
43635	CLIP,FLEXIBLE HOSE ATTACHE, CONDUIT FLEXIBLE PRENSA PARA MANGUERA FLEX	0305-43-635	2		
43635B	CLIP,FLEXIBLE HOSE ATTACHE, CONDUIT FLEXIBLE PRENSA PARA MANGUERA FLEX	0136-43-635	3		
43635C	CLIP,HOSE ATTACHE, DURITE PRENSA PARA MANGUERZ	0305-43-635	1		
43650A	PIPE(L),BRAKE-REAR CONDUIT (G), FREIN ARRIER TUBO IZQ. FRENO TRASERO	8871-43-650B	1		
43660A	PIPE(R),BRAKE-REAR CONDUIT (D), FREIN ARRIER TUBO DER. FRENO TRASERO	8871-43-660B	1		
43750A	HOLDER,P.B.V SUPPORT DE SOUPAPE	8871-43-750	1	79 MODEL	SA22C .. 500001 -563500
		8980-43-750	1	80 MODEL	SA22C .. 563501-
43810B	HOSE NO.1,FLEXIBLE DURITE FLEXIBLE NO 1 MANGUERA NO. 1, FLEXIBLE	1758-43-820	1		
43900A	VALVE,P.B. VALVE P.B.	3591-43-900	1		SA22C .. 500001 -573961
		8341-43-900	1		SA22C .. 573961-
43980	HOSE,FLEXIBLE DURITE FLEXIBLE MANGUERA, FLEXIBLE	3958-43-980	2		

4360A BRAKE PIPINGS

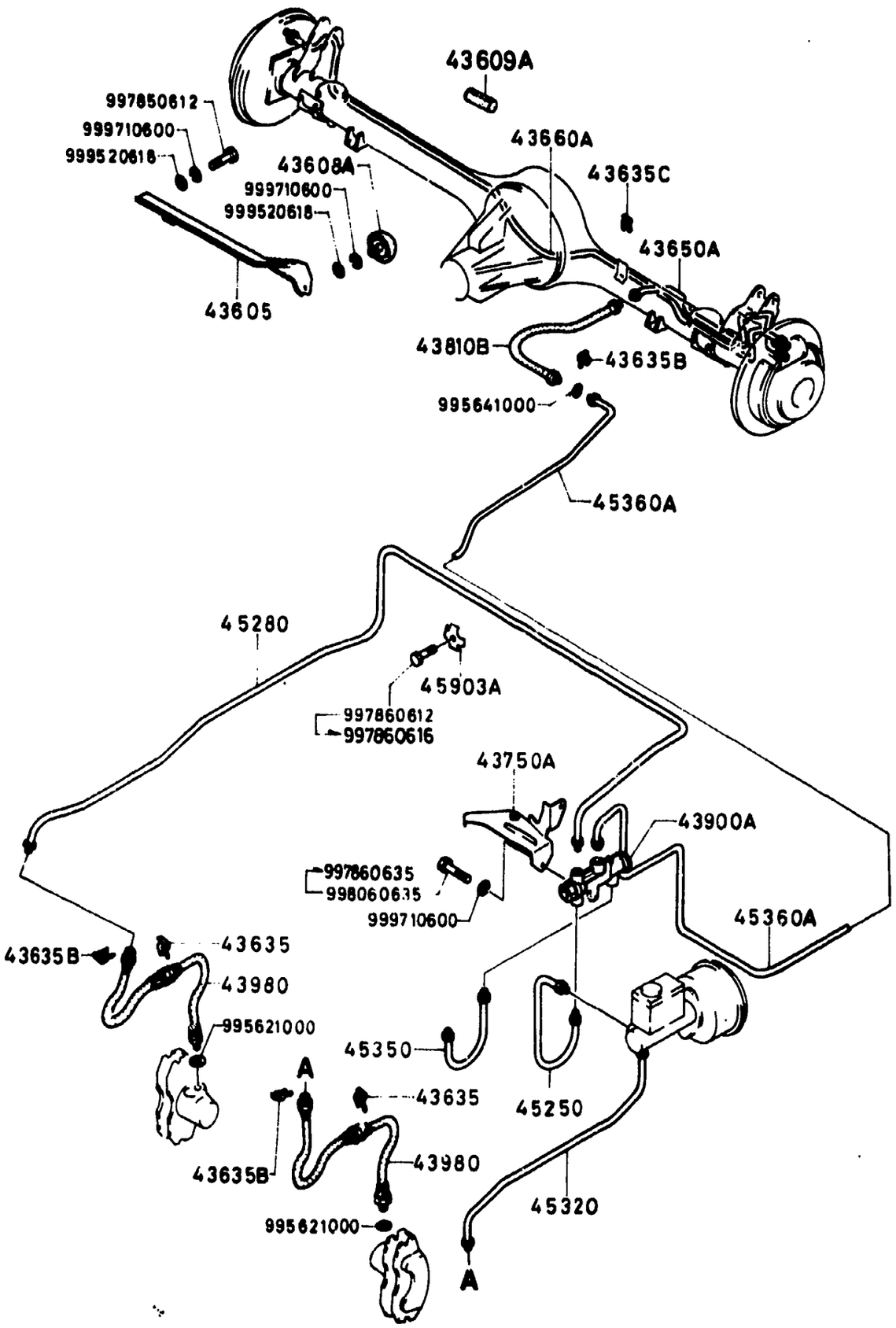

4360A-2* BRAKE PIPINGS

D-CODE (Key No.)	PART NAME	PART No.	Qty.	MODEL/DESCRIPTION	VIN (Chassis No.)
45250	PIPE,BRAKE-FRONT CONDUIT, DE FREIN AVANT TUBO, FRENO DELANTERO	8871-45-330	1	79 MODEL	SA22C .. 500001 -510188
	<A >	8871-45-330A	1	79 MODEL	SA22C .. 510189 -563500
		8980-45-330	1	80 MODEL	SA22C .. 568501-
45280	PIPE(R),BRAKE-FRONT CONDUIT (D), FREIN AVANT TUBO DER. FRENO DELANTERO	8871-45-280B	1		SA22C .. 500001 -502773
	<A >	8871-45-280C	1		SA22C .. 502774 -510188
	<A >	8871-45-280D	1		SA22C .. 510189-
45320	PIPE(L),BRAKE-FRONT CONDUIT (G), FREIN AVANT TUBO IZQ. FRENO DELANTERO	8871-45-320	1	79 MODEL	SA22C .. 500001 -510188
	<A >	8871-45-320A	1	79 MODEL	SA22C .. 510189 -563500
		8980-45-320	1	80 MODEL	SA22C .. 568501-
45350	PIPE,BRAKE-REAR CONDUIT, FREIN ARRIERE TUBO, FRENO TRASERO	8871-45-370A	1	79 MODEL	SA22C .. 500001 -510188
	<A >	8871-45-370B	1	79 MODEL	SA22C .. 510189 -568500
		8980-45-370	1	80 MODEL	SA22C .. 568501-
45360A	PIPE,BRAKE-REAR CONDUIT, FREIN ARRIERE TUBO, FRENO TRASERO	8871-45-360	1		SA22C .. 500001 -500071
		8871-45-360A	1		SA22C .. 500072-
45903A	CLIP ATTACHE PRENSA TRABA GAZA	0866-45-903A	2		SA22C .. 500001 -611387
		*8173-45-903	1		SA22C .. 611388-

SECTION NUMBER INDEX (CHASSIS)

STARTING LOCATION	SECTION No.	SECTION NAME
2–C2	2500A	PROPELLER SHAFT
2–D2	2600A	REAR AXLE
2–E2	2610A	REAR BRAKES
2–C3	2700A	DIFFERENTIAL
2–F3	2800A	REAR SUSPENSION
2–C4	3200A	STEERING WHEEL
2–F4	3210A	STEERING GEAR & COLUMN
2–H4	3230A	STEERING LINKAGE
2–C5	3300A	FRONT AXLE & BRAKES
2–H5	3400A	FRONT SUSPENSION
2–K5	3410A	CROSSMEMBER & STABILIZER
2–C6	3700A	TIRE & JACK
2–G6	3900A	ENGINE & T/MISSION MOUNTINGS
2–C7	4000A	EX. SYSTEM
2–C8	4140A	CLUTCH RELEASE & MASTER CYLINDERS (MANUAL)
2–E8	4160A	ACCELERATOR CONTROLS
2–F8	4200A	FUEL TANK
2–C9	4300A	CLUTCH & BRAKE
2–E9	4340A	TANDEM MASTER CYLINDER & VACUUM POWER ASSIST SYSTEM
2–H9	4360A	BRAKE PIPINGS
2–C10	4400A	PARKING BRAKE SYSTEM
2–E10	4500A	FUEL & EVAPORATION PIPINGS
2–H10	4600A	CHANGE CONTROLS (AUTOMATIC)

THE FRAMES IN THIS COLUMN INDICATE :

2–C10	4400A	PARKING BRAKE SYSTEM
2–E10	4500A	FUEL & EVAPORATION PIPINGS
2–H10	4600A	CHANGE CONTROLS (AUTOMATIC)

© 1983 Toyo Kogyo Co., Ltd.
MAY 1983

4400A PARKING BRAKE SYSTEM

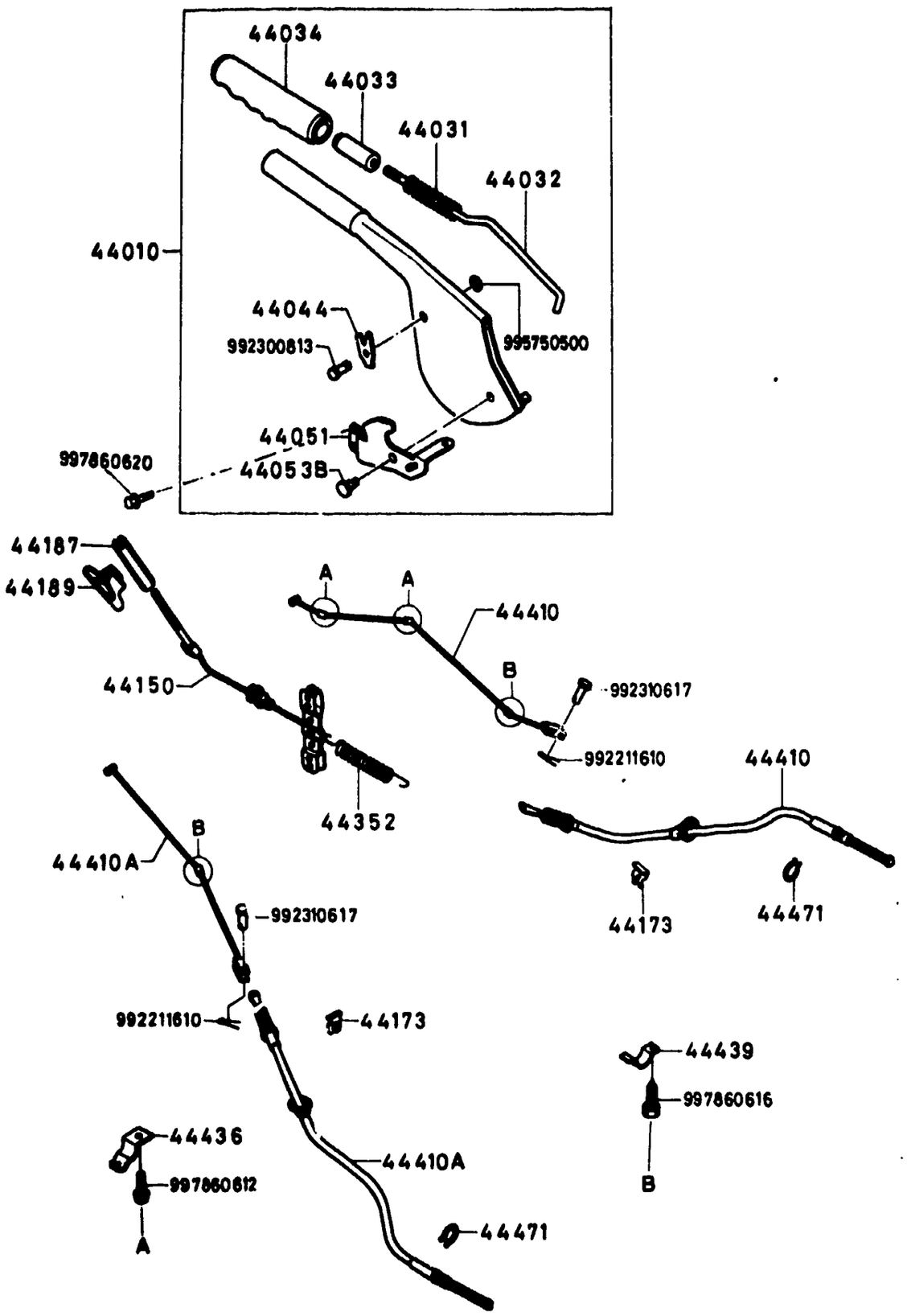

4400A-1 PARKING BRAKE SYSTEM

D-CODE (Key No.)	PART NAME	PART No.	Qty.	MODEL/DESCRIPTION	VIN (Chassis No.)
44010	LEVER,PARKING BRAKE LEVIER DE FREIN A MAIN PALANCA DE FRENO DE ESTAM	8871-44-010E	1		SA22C .. 500001 -504975
		8871-44-010C	1		SA22C .. 504977 -541116
		8871-44-010D	1		SA22C .. 541117 -583526
	BLACK	00			
		8871-44-010E	1		SA22C .. 583527-
	BLACK	00			
44031	SPRING RESSORT RESORTE	0813-44-031A	1		
44032	ROD,RELEASE TIGE,DECLANCHEMENT VARILLA DE DESACOPLE	8871-44-032	1		
44033	BUTTON,RELEASE BOUTON, DECLENCHEUR BOTON,DESENGANCHE	0221-44-033	1		
	BLACK	00			
44034	CAP BOUCHON TAPA	8218-44-034A	1		SA22C .. 583527-
	BLACK	00			
		8871-44-034	1		SA22C .. 500001 -541116
		8871-44-034A	1		SA22C .. 541117 -583526
44044	RATCHET CLIQUET TRINQUETE	1243-44-044	1		SA22C .. 500001 -504976
		1243-44-044A	1		SA22C .. 504977-
44051	SECTOR SECTEUR SECTOR	8871-44-051	1		
44053B	RIVET RIVET	8871-44-053	1		

4400A PARKING BRAKE SYSTEM

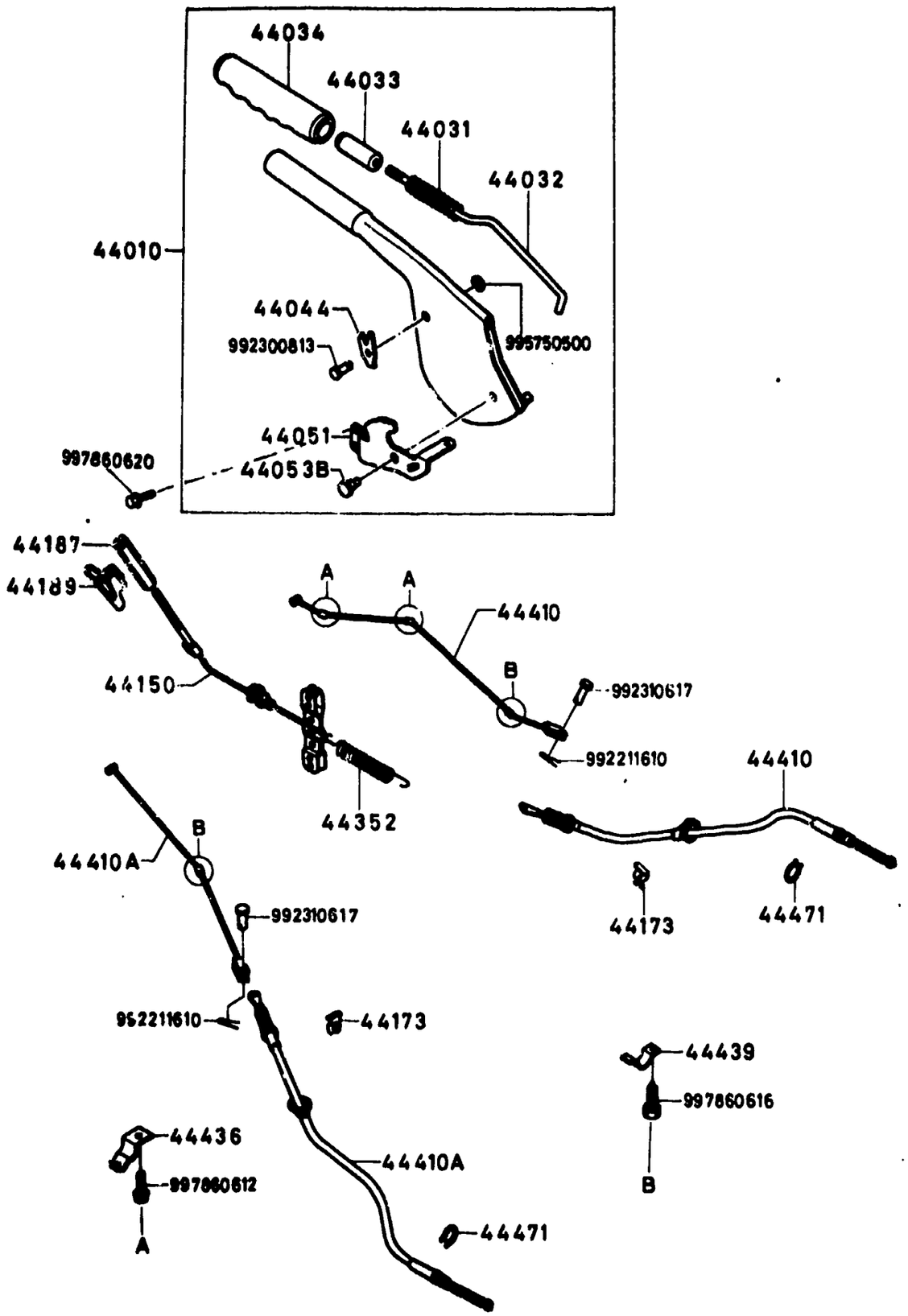

4400A-2* PARKING BRAKE SYSTEM

D-CODE (Key No.)	PART NAME	PART No.	Qty.	MODEL/DESCRIPTION	VIN (Chassis No.)
44150	CABLE,F.-PARK.BRAKE CABLE, AV CABLE FRONTAL	8871-44-150	1		
44173	CLIP ATTACHE PRENSA TRABA GAZA	0118-44-375	2		
44187	SCREW VIS TORNILLO	0866-44-187A	1		
44189	CLIP ATTACHE PRENSA TRABA GAZA	0866-44-189	1		
44352	SPRING,RETURN RESSORT DE RAPPEL RESORTE,RETORNO	0613-41-308	1		
44410	CABLE(R),R.-PARK. CABLE, ARRIERE CABLE TRASERO	8871-44-160	1	(FRONT SIDE)	
		8871-44-410	1	(REAR SIDE)	
44410A	CABLE(L),R.-PARK. CABLE FREIN A MAIN(G)	8871-44-170	1	(FRONT SIDE)	
		8871-44-420	1	(REAR SIDE)	
44436	CLIP ATTACHE PRENSA TRABA GAZA	8871-44-439	2		
44439	CLIP,CABLE ATTACHE, CABLE SEGURO,CAJA	1011-44-439	2		
44471	CLIP ATTACHE PRENSA TRABA GAZA	0305-44-471	2		

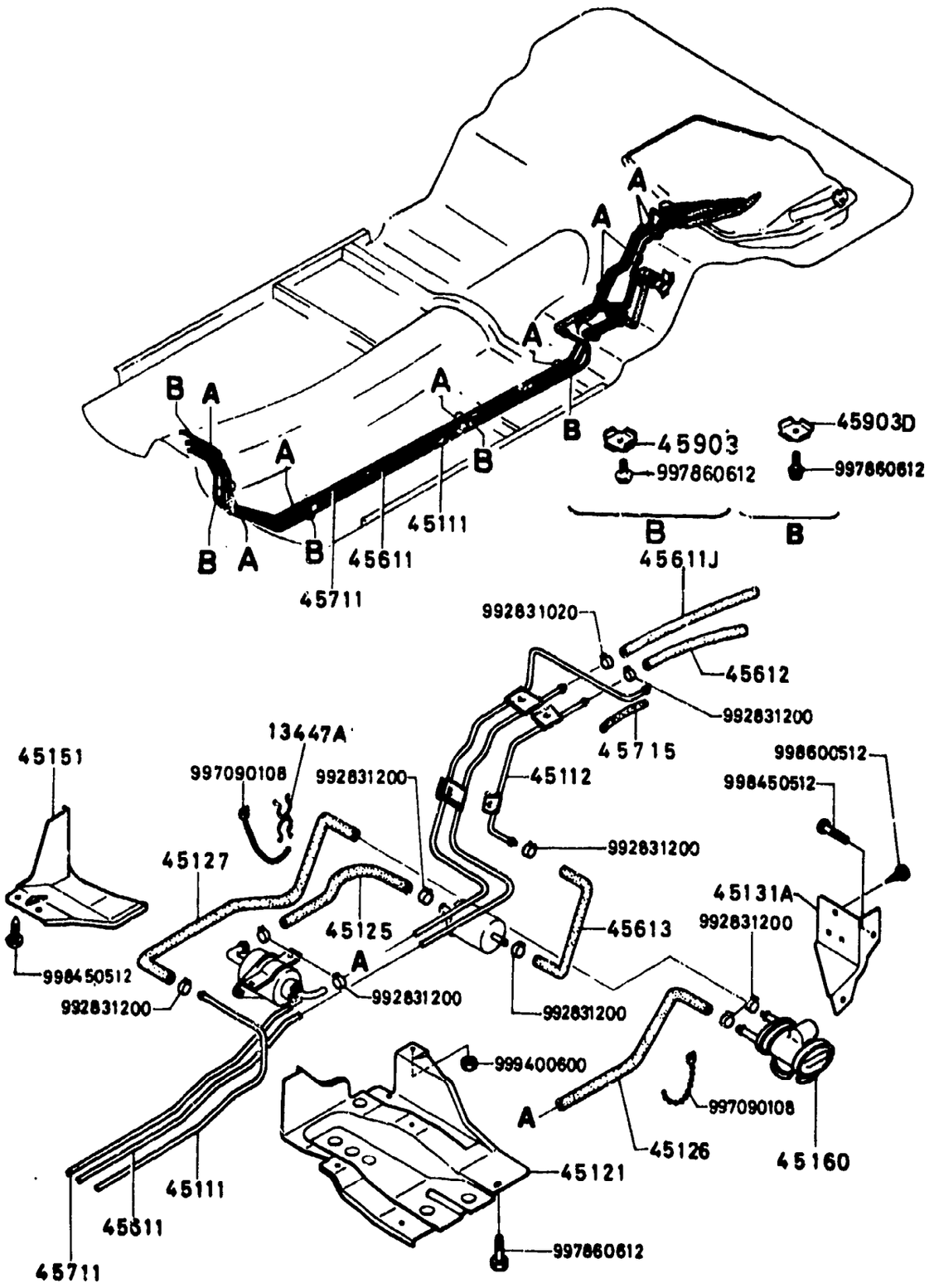

45000A-1 FUEL & EVAPORATION PIPINGS

D-CODE (Key No.)	PART NAME	PART No.	Qty.	MODEL/DESCRIPTION	VIN (Chassis No.)
13447A	CLIP ATTACHE PRENSA TRABA GAZA	1570-13-447	1	79 MODEL	SA22C .. 500001 -505155
45111	PIPE,FUEL MAIN CONDUIT, ESSENCE TUBO PRINCIPAL COMBUSTIBL	8871-45-111A	1		
45112	PIPE,FUEL MAIN CONDUIT, ESSENCE TUBO PRINCIPAL COMBUSTIBL	8871-45-112	1		
45121	BRACKET,FUEL PUMP ATTACHE, POMPE A ESSENCE SOPORTE,BOMBA COMBUST.	8871-45-160	1		
45125	HOSE,FUEL FLEXIBLE ESSENCE	9934-80-8190	1	(ORD.BY 9934908750) 79 MODEL	SA22C .. 500001 -568500
		9935-80-8190	1	(ORD.BY 9935808999) 80 MODEL	SA22C .. 568501-
45126	HOSE,FUEL FLEXIBLE ESSENCE	8344-45-125	1	80 MODEL	SA22C .. 568501-
		8871-45-125A	1	79 MODEL	SA22C .. 500001 -568500
45127	HOSE,FUEL MAIN TUYAU D'ARRIVEE D'ESSENCE MANGUERA TANQUE PRINC.	8344-45-126	1	80 MODEL	SA22C .. 568501-
		8871-45-126A	1	79 MODEL	SA22C .. 500001 -505155
	<A >	8871-45-126B	1	79 MODEL	SA22C .. 505156 -547088
	<AN>	8871-45-126C	1	79 MODEL	SA22C .. 547089 -568500
45131A	BRKT.,CUT VALVE SUPPORT	8871-45-131A	1		
45151	PROTECTOR,FUEL PUMP PROTECTION POMPE ESSENCE	8871-45-151	1		
45160	VALVE-FUEL CUT	3919-45-170	1	79 MODEL	SA22C ..

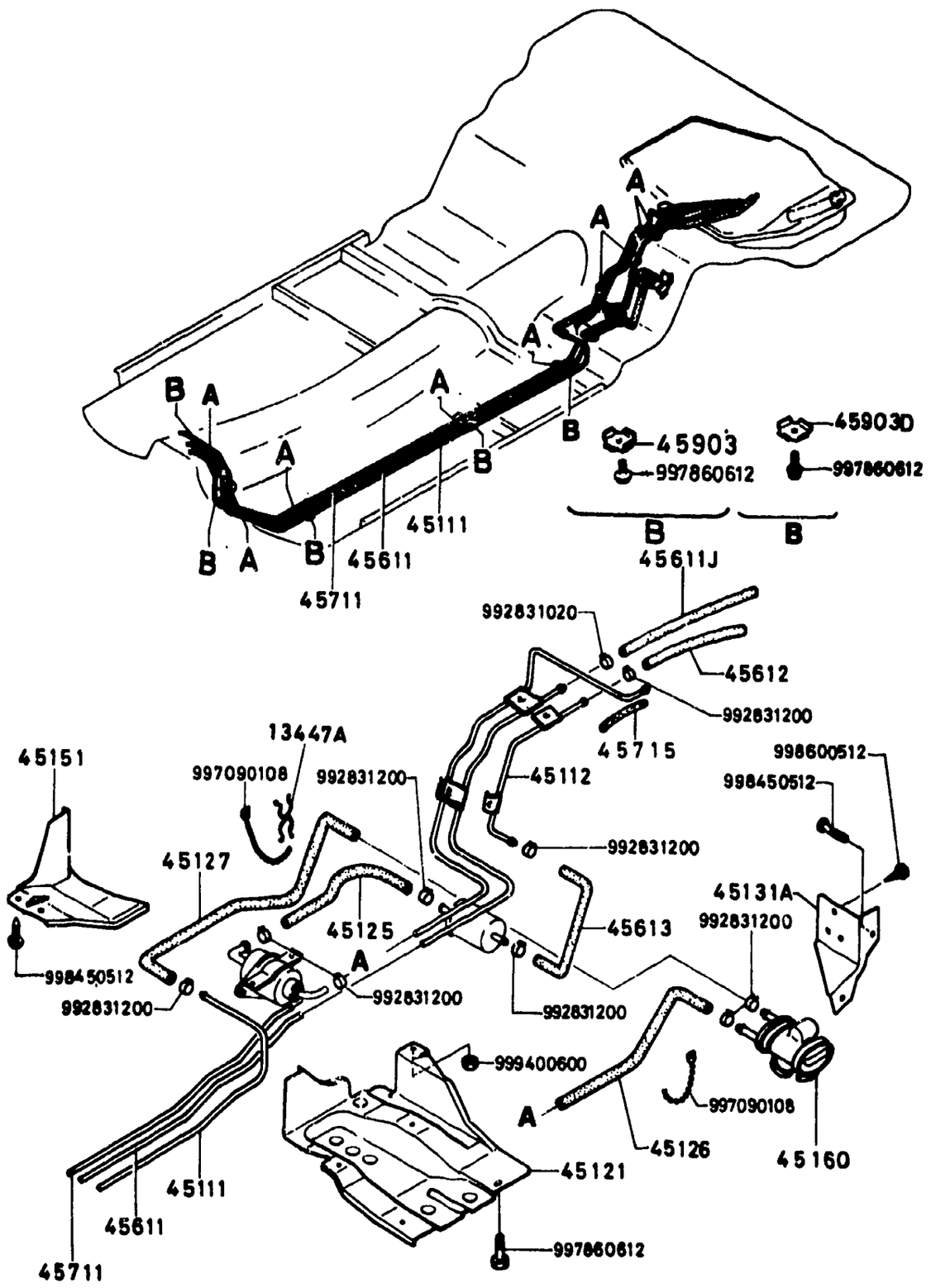

D-CODE (Key No.)	PART NAME	PART No.	Qty.	MODEL/DESCRIPTION	VIN (Chassis No.)
45160 CONT'D	SOUPAPE COUPE ESSENCE	3919-45-170			500001 -568500
		3919-45-170A	1	80 MODEL	SA22C .. 568501-
45611	PIPE,FUEL RETURN CONDUIT, ESSENCE RETOUR TUBO RETROCESO COMBUSTIBL	8871-45-611A	1	79 MODEL	SA22C .. 500001 -500400
	<A >	8871-45-611C	1		SA22C .. 500401-
45611J	HOSE,FUEL RETURN FLEXIBLE RETOUR ESSENCE MANGUERA, RETORNO COMBUST	9934-80-6250	1	(ORD.BY 9934906750) 79 MODEL	SA22C .. 500001 -541116
	<AN>	9934-80-6260	1	(ORD.BY 9934906750) 79 MODEL	SA22C .. 541117 -568500
		9935-80-6260	1	(ORD.BY 9935806999) 80 MODEL	SA22C .. 568501-
45612	HOSE,FUEL FLEXIBLE ESSENCE	9934-80-8260	1	(ORD.BY 9934908750) 79 MODEL	SA22C .. 500001 -541116
	<AN>	9934-80-8270	1	(ORD.BY 9934908750) 79 MODEL	SA22C .. 541117 -568500
		9935-80-8270	1	(ORD.BY 9935808999) 80 MODEL	SA22C .. 568501-
45613	HOSE,FUEL FLEXIBLE ESSENCE	8344-45-123	1	80 MODEL	SA22C .. 568501-
		8545-45-123	1	79 MODEL	SA22C .. 500001 -568500
45711	PIPE,EVAPORATION CONDUIT, EVAPORATION TUBO, EVAPORACION	8871-45-711D	1		SA22C .. 500001 -500400
	<A >	8871-45-711F	1		SA22C .. 500401-
45715	PROTECTOR,PIPE PROTEGE TUYAU	8871-45-715	1		SA22C .. 500401-

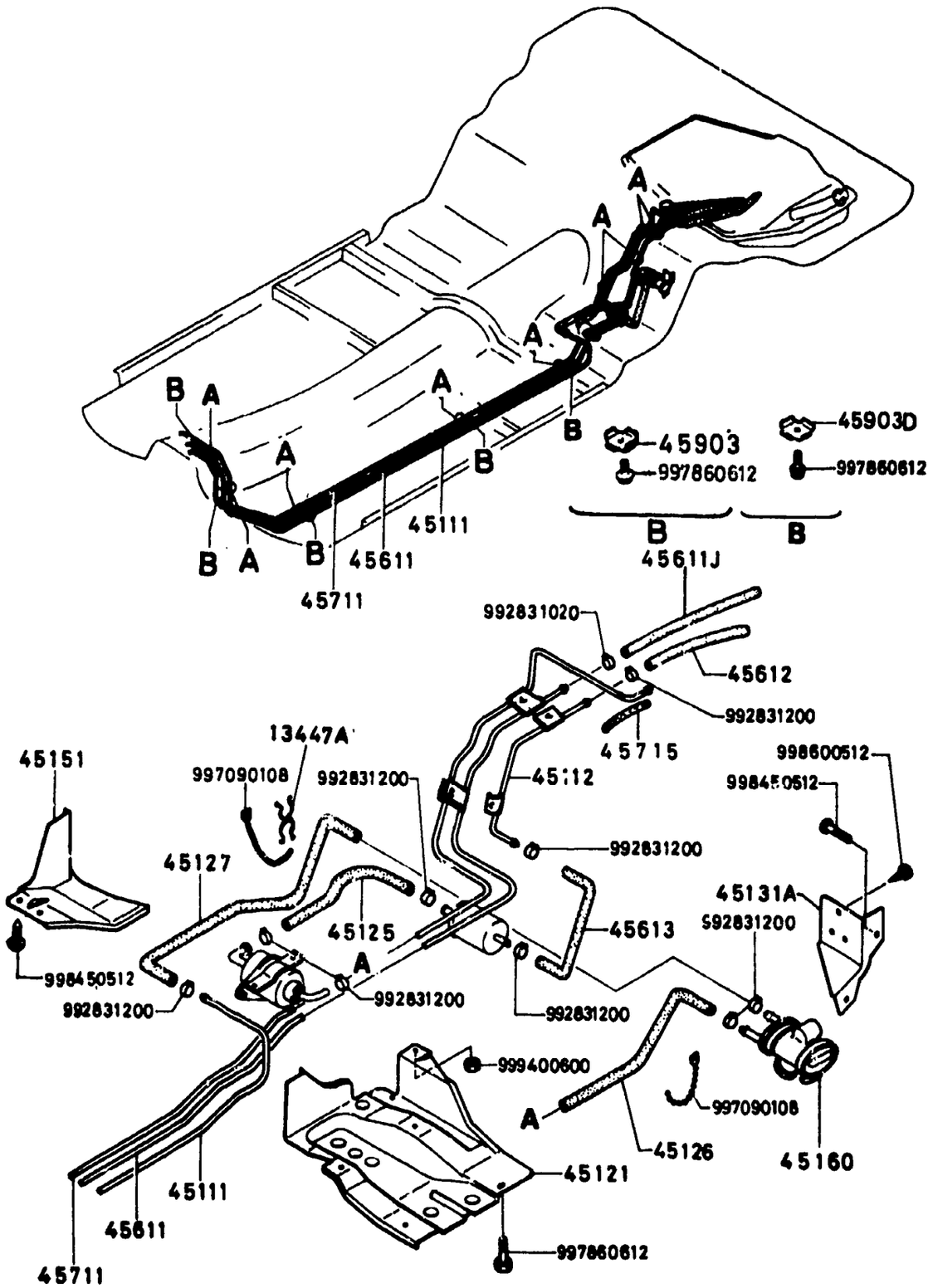

4500A-3* FUEL & EVAPORATION PIPINGS

D-CODE (Key No.)	PART NAME	PART No.	Qty.	MODEL/DESCRIPTION	VIN (Chassis No.)
45715 CONT'D	PROTECTOR TUBO	8871-45-715			
45903	CLIP,PIPE ATTACHE, CONDUIT PRENSA PARA CANERIA	0866-45-903A	9		
45903D	CLIP,PIPE	0866-45-903A	5		SA22C .. 500001 -525593
		8871-45-903	5		SA22C .. 525594 -525845
		8871-45-903A	5		SA22C .. 525846-

4600A CHANGE CONTROLS (AUTOMATIC)

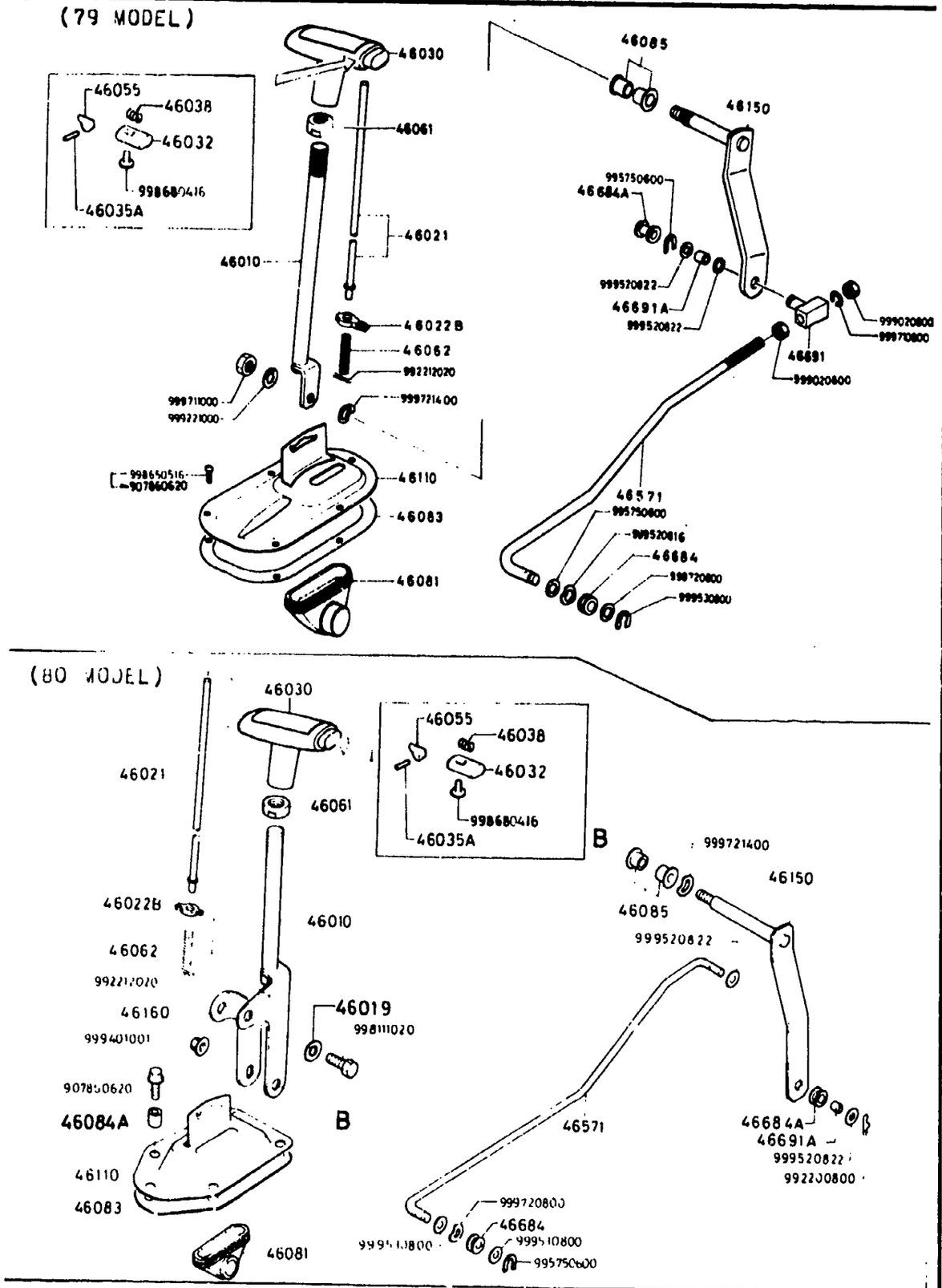

4600A-1 CHANGE CONTROLS (AUTOMATIC)

D-CODE (Key No.)	PART NAME	PART No.	Qty.	MODEL DESCRIPTION	VIN (Chassis No.)
46010	LEVER,SELECT LEVIER SELECTEUR PALANCA SELECTORA	1481-46-010	1	80 MODEL	SA22C .. 568501-
		8872-46-010A	1	79 MODEL	SA22C .. 500001 -568500
46019	WASHER,PLAIN RONDELLE ARANDELA,SIMPLE	1481-46-019	1	80 MODEL	SA22C .. 568501-
46021	ROD TIGE VARILLA	8872-46-021A	1		
46022B	PIN,GUIDE CLAVETTE PASADOR	1840-46-022	1		SA22C .. 500001 -541116
	<A >	8174-46-022	1		SA22C .. 541117-
46030	KNOB,CHANGE LEVER BOULE DE LEVIER DE VITESS PERILLA DE PALANCA DE CAM	8872-46-030A	1		SA22C .. 500001 -580516
	<A >	*8872-46-030B	1		SA22C .. 580517-
	BLACK	00			
46032	BUTTON,PUSH BOUTON POUSSOIR	3872-46-032	1		
46035A	PIN CLAVETTE PASADOR	1244-46-035	1		
46038	SPRING RESSORT RESORTE	1244-46-038	1		
46055	LEVER LEVIER PALANCA	1244-46-055	1		
46061	NUT ECROU TUERCA	2375-46-061	1		SA22C .. 500001 -574179
		8200-46-061	1		SA22C .. 574180-
46062	SPRING RESSORT	2375-46-062	1		

4600A CHANGE CONTROLS (AUTOMATIC)

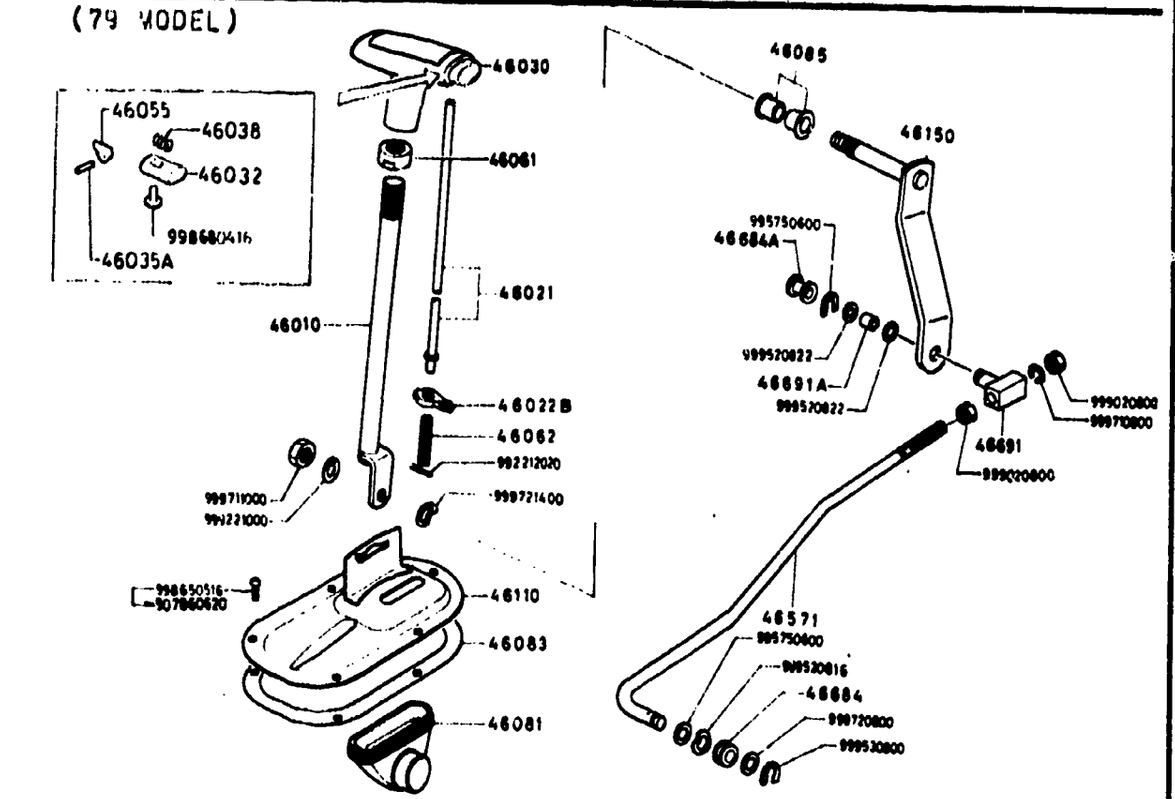

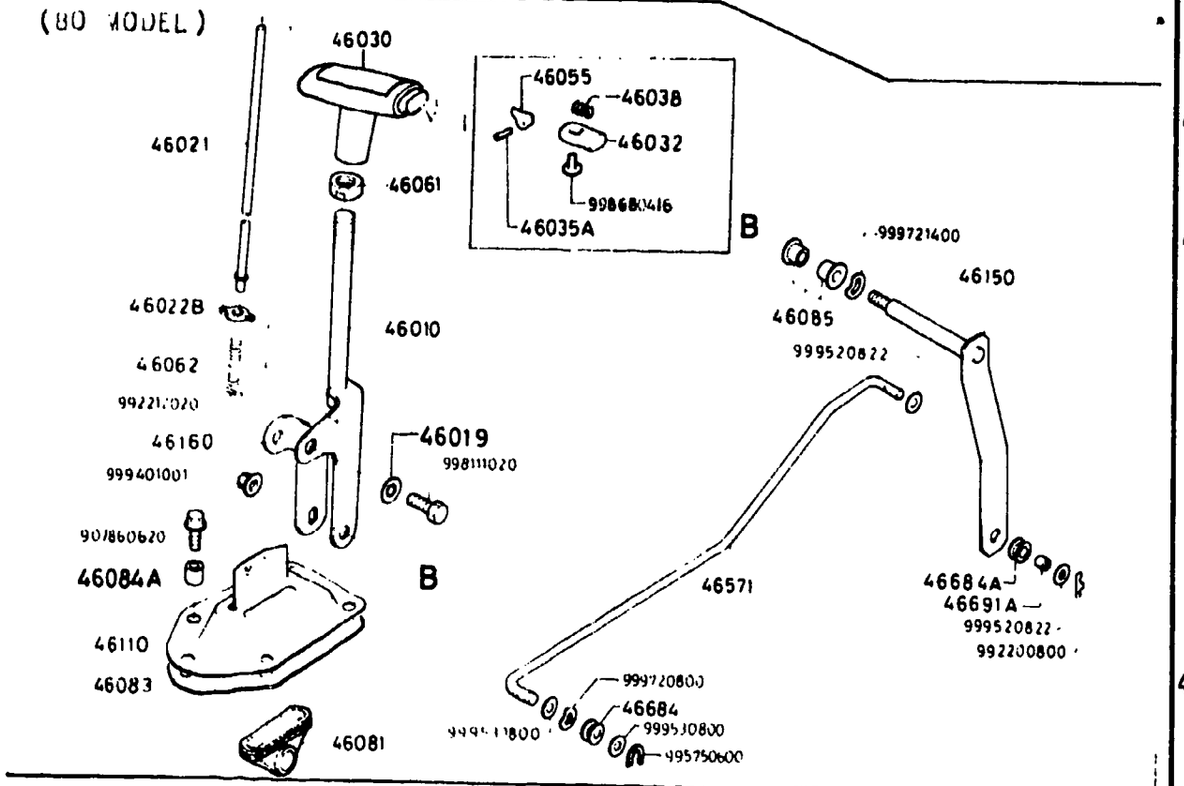

46600A-2 CHANGE CONTROLS (AUTOMATIC)

D-CODE (Key No.)	PART NAME	PART No.	Qty.	MODEL DESCRIPTION	VIN (Chassis No.)
46062 CONT'D	RESORTE	2375-46-062			
46081	BOOT COIFFE FUNDA	0308-46-081	1	79 MODEL	SA22C .. 500001 -563500
		1481-46-081	1	80 MODEL	SA22C .. 568501 -624202
		*1481-46-081A	1	80 MODEL	SA22C .. 624203-
46083	RUBBER,SEAL JOINT CAOUTCHOUC GOMA,SELLO	1481-46-083A	1	80 MODEL	SA22C .. 568501-
		8872-46-083	1	79 MODEL	SA22C .. 500001 -547088
		8872-46-083A	1	79 MODEL	SA22C .. 547089 -563500
46084A	SPACER BOULON PERNO	1481-46-084A	5	80 MODEL	SA22C .. 568301-
46085	BUSH BUSELURE BUJE	1015-46-085	2		
46110	BRACKET,LEVER ATTACHE, LEVIER SOPORTE,PALANCA	1481-46-110A	1	80 MODEL	SA22C .. 568501 -617318
		*1481-46-110B	1	80 MODEL	SA22C .. 617319-
		8872-46-110	1	79 MODEL	SA22C .. 500001 -547088
		8872-46-110A	1	79 MODEL	SA22C .. 547089 -563500
46150	LEVER LEVIER PALANCA	1481-46-150A	1	80 MODEL	SA22C .. 566501-
		8872-46-150	1	79 MODEL	SA22C .. 500001 -563500
46160	LEVER,ADJUST LEVIER,AJUSTEUR	1481-46-160	1	80 MODEL	SA22C .. 568501-

4600A CHANGE CONTROLS (AUTOMATIC)

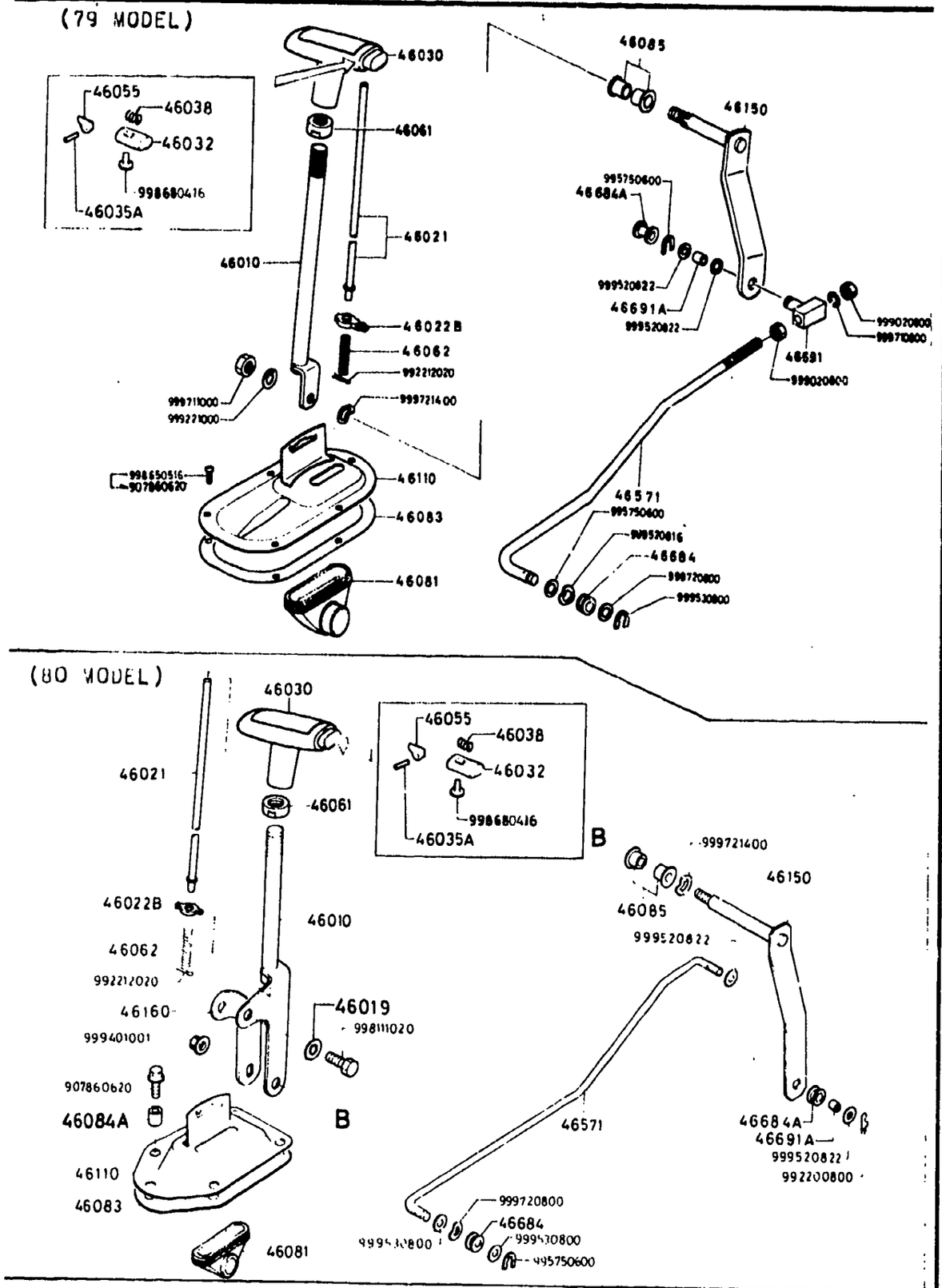

4600A-3* CHANGE CONTROLS (AUTOMATIC)

D-CODE (Key No.)	PART NAME	PART No.	Qty.	MODEL DESCRIPTION	VIN (Chassis No.)
46160 CONT'D	PALANCA,REGULADOR	1481-46-160			
46571	ROD TIGE VARILLA	1481-46-571A	1	80 MODEL	SA22C .. 568501-
		8872-46-571	1	79 MODEL	SA22C .. 500001 -563500
46684	BUSH BUSELURE BUJE	1015-46-684	1		
46684A	BUSH,COUNTER LEVER BUSELURE DE LEVIER	1481-46-684	1	80 MODEL	SA22C .. 568501-
		8872-46-684	1	79 MODEL	SA22C .. 500001 -563500
46691	JOINT'T' BUSELURE BUJE	8872-46-691	1	79 MODEL	SA22C .. 500001 -568500
46691A	BUSH,JOINT BUSELURE DE RACCORDEMENT	8872-46-685	1		