Parts Catalog

RX-7 U.S.A.&Canada ('79 ► '80)

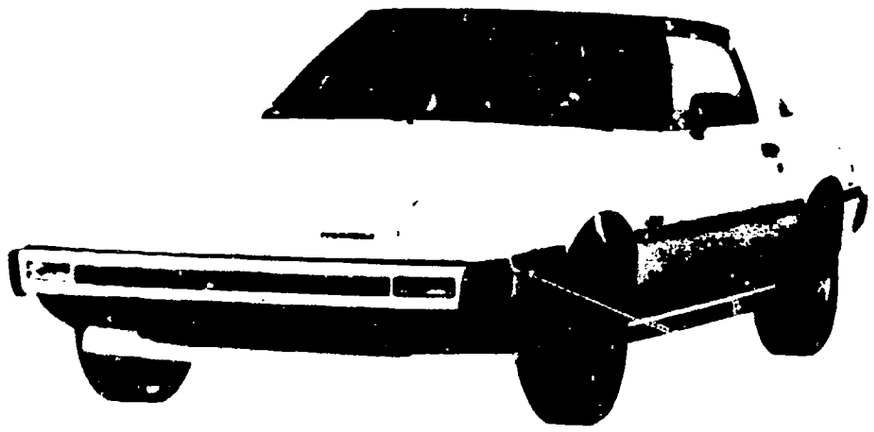

SA22C-500001~650000

CONTENTS

The following charts provide you with the general layout and contents location of Mazda parts catalogs, but some sections may vary slightly in detail.

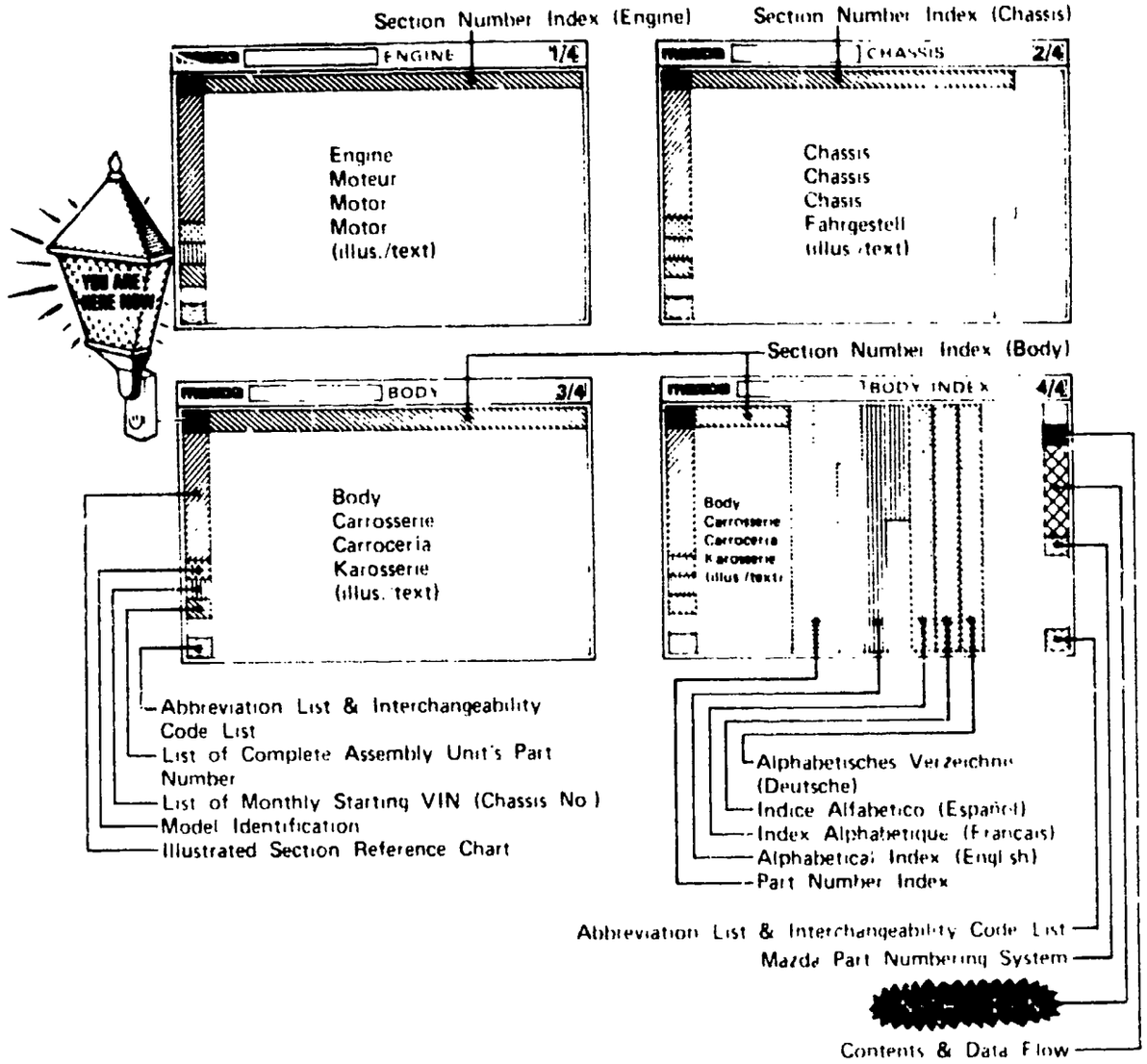

May '83 (FINAL)
Catalog NO. 1111-MF-USAA-08

mazda

© 1983 Toyo Kogyo Co., Ltd.

ILLUSTRATED SECTION REFERENCE CHART

1000A



SHORT ENGINE & GASKET SETS

1030A



ROTOR HOUSING

1040A



OIL PAN & FRONT & REAR HOUSINGS

1100A

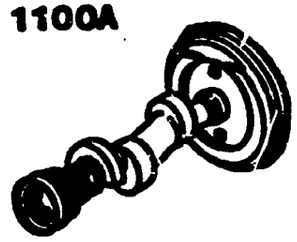

ECCENTRIC SHAFT & FLYWHEEL

1110A



ROTOR & RELATED

1400A

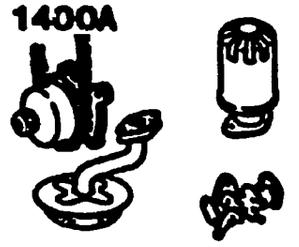

OIL PUMP & FILTER

ROTARY ENGINE (1/2)

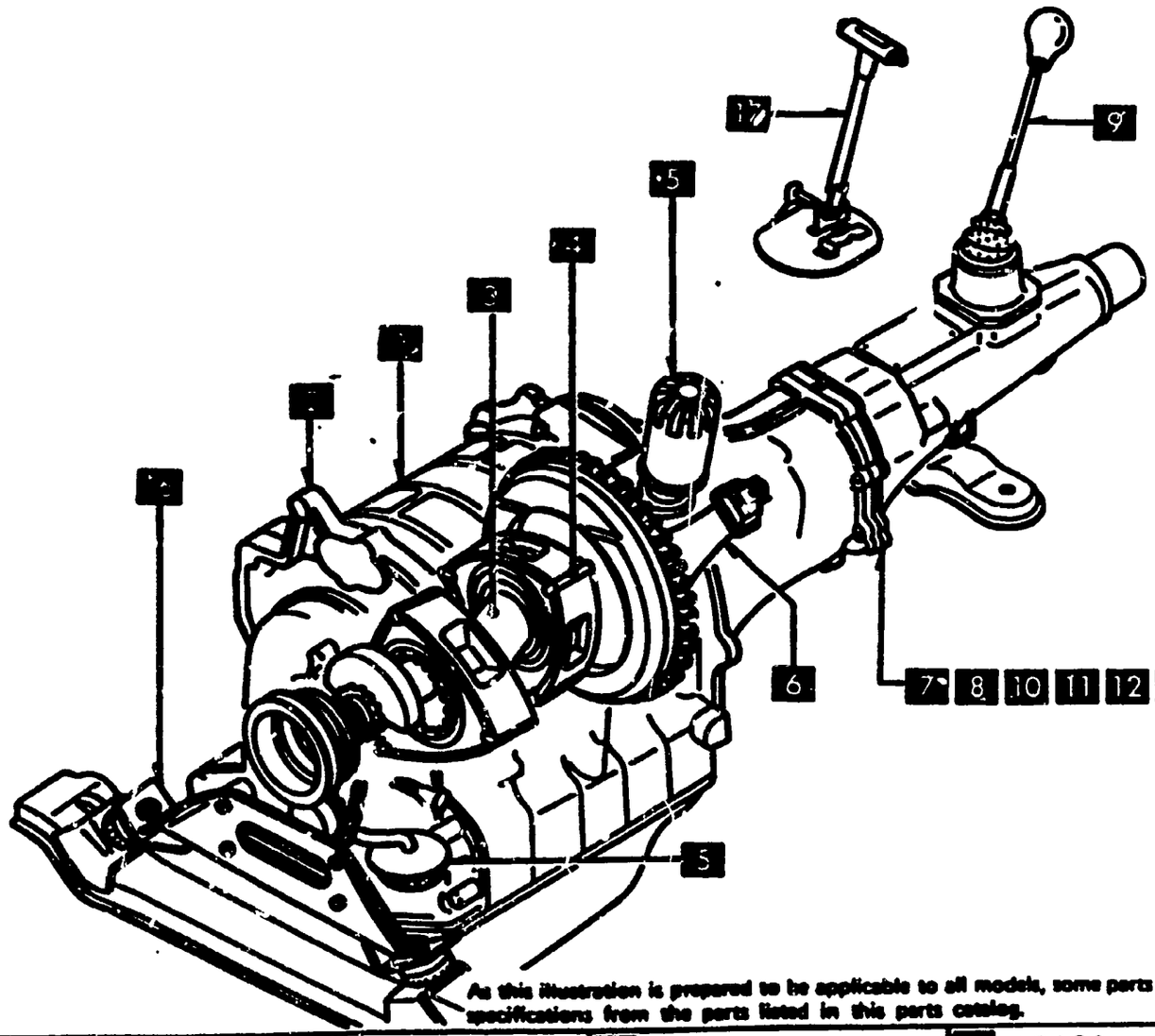

As this illustration is prepared to be applicable to all models, some parts are different in specifications from the parts listed in this parts catalog.

1600A

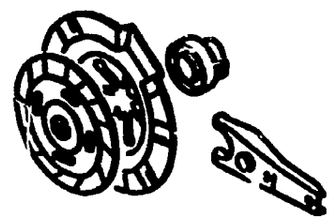

CLUTCH (MANUAL)

1700A

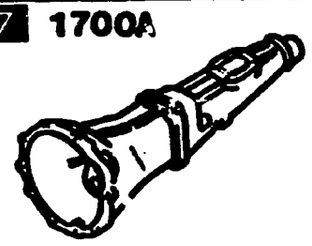

T/MISSION CASE (MANUAL)

1710A

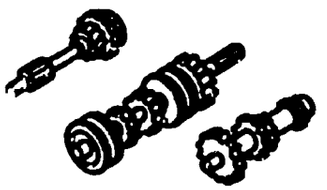

T/MISSION GEARS (MANUAL)

1720A

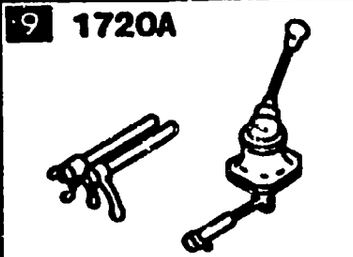

CHANGE CONTROLS (MANUAL)

4600A

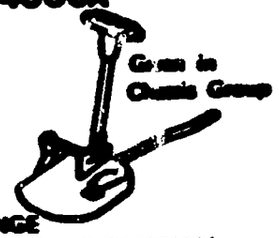

CHANGE CONTROLS (MANUAL)

3900A

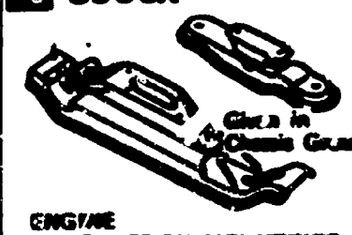

ENGINE & T/MISSION MOUNTINGS

1950A



MANUAL LINKAGE (AUTOMATIC T/MISSION)

1940A



LOW, REVERSE & GOVERNOR (AUTOMATIC T/MISSION)

1930A



CLUTCH & PLANETARY GEARS (AUTOMATIC T/MISSION)

1920A

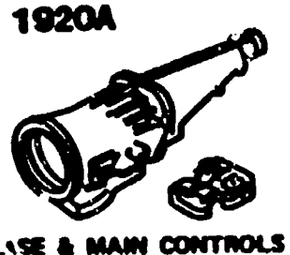

CASE & MAIN CONTROLS (AUTOMATIC T/MISSION)

1910A

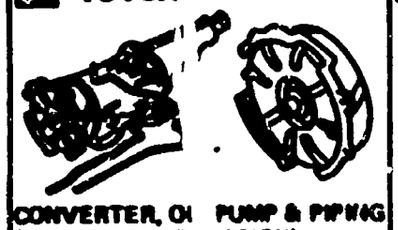

CONVERTER, OIL PUMP & PIPING (AUTOMATIC T/MISSION)

1900A



TORQUE GLIDE (MANUAL)

ILLUSTRATED SECTION REFERENCE CHART

1 1300A

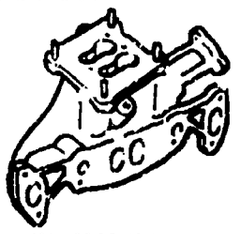

IN MANIFOLD

2 1310A

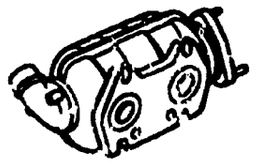

THERMAL REACTOR

3 1320A

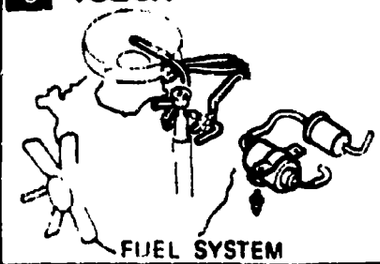

FUEL SYSTEM

4 1330A

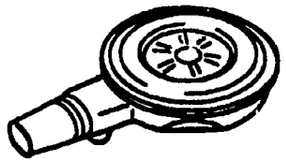

AIR CLEANER

5 1350A



STARTING ASSIST SYSTEM

6 1360A



CARBURETOR

ROTARY ENGINE (2/2)

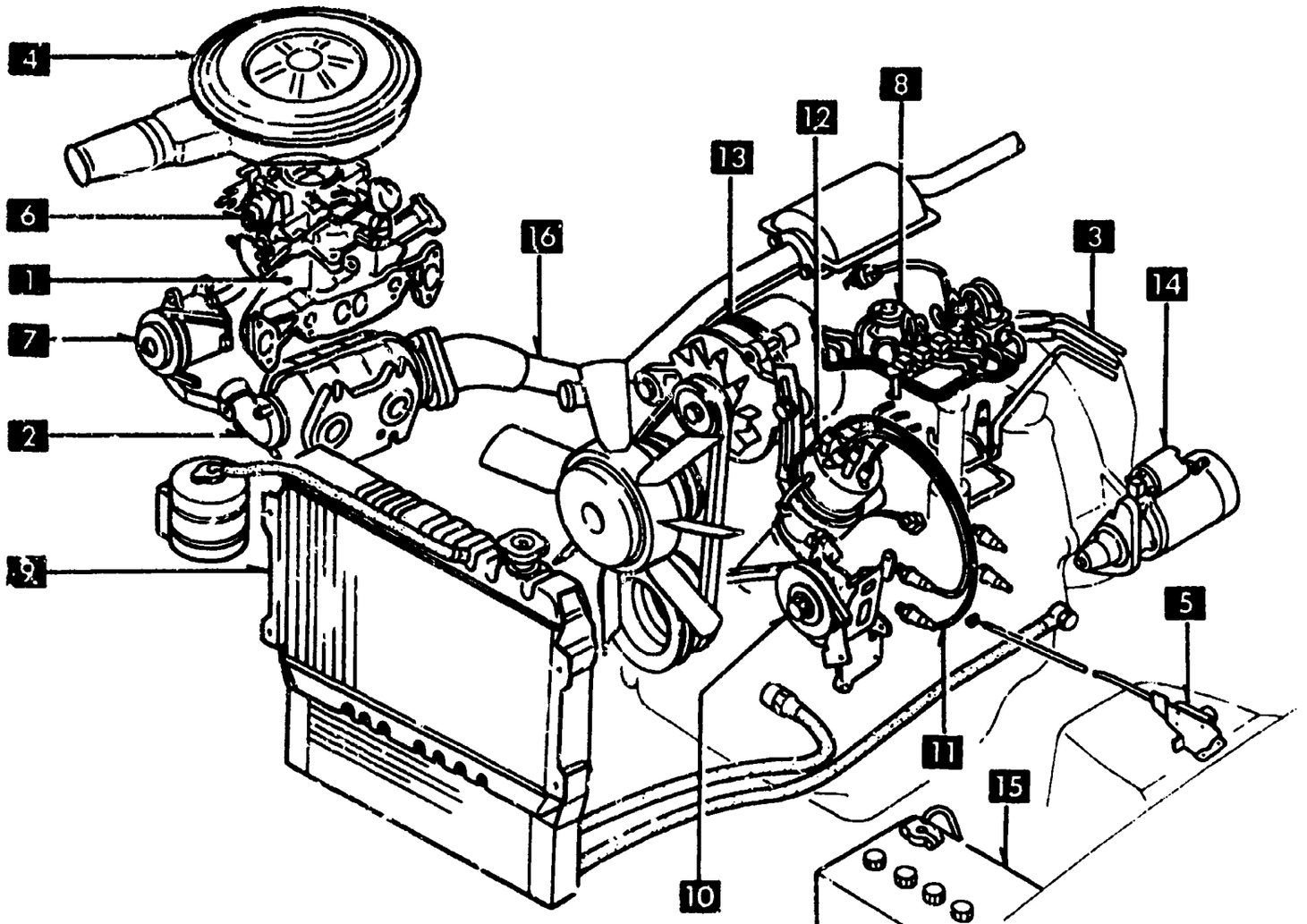

As this illustration is prepared to be applicable to all models, some parts are different in specifications from the parts listed in this parts catalog.

7 1371A



EMISSION CONTROLS (AIR PUMP & CONTROL VALVE)

8 1380A

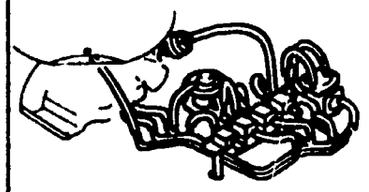

EMISSION CONTROLS (EX. SIDE)

9 1500A

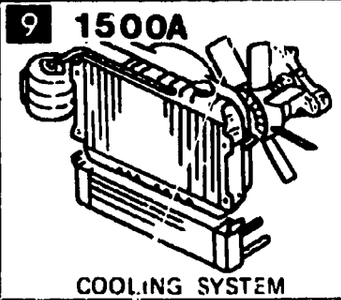

COOLING SYSTEM

10 1580A

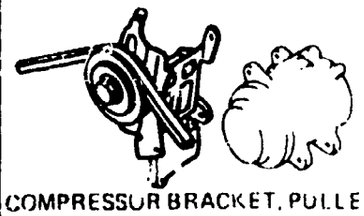

COMPRESSOR BRACKET, PULLEY & BELT (AIR CONDITIONER)

16 4000A

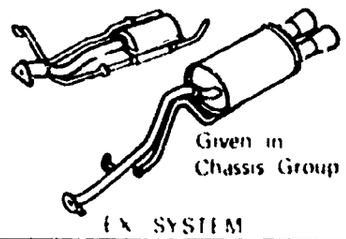

EX. SYSTEM

15 1850A

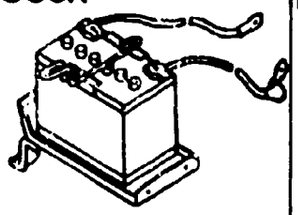

BATTERY & CABLES

14 1840A

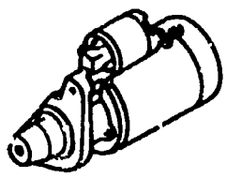

STARTER

13 1830A



ALTERNATOR

12 1820A



DISTRIBUTOR

11 1800A

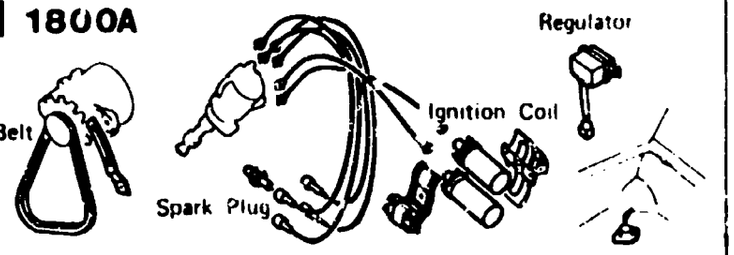

ELECTRICAL SYSTEM (ENGINE)

ILLUSTRATED SECTION REFERENCE CHART

1 2500A

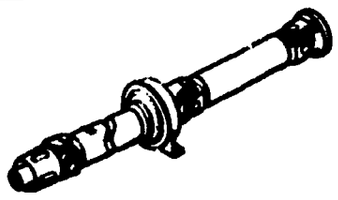

PROPELLER SHAFT

2 2600A

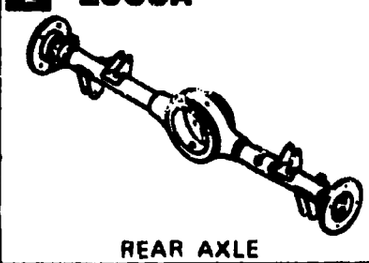

REAR AXLE

3 2610A



REAR BRAKES

4 2700A

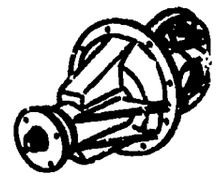

DIFFERENTIAL

5 2500A

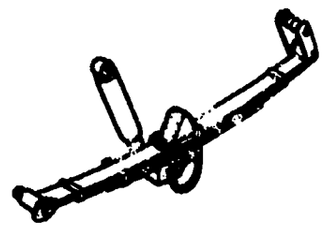

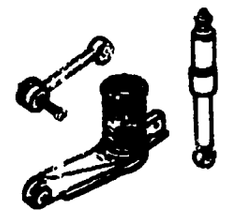

REAR SUSPENSION

16 4600A

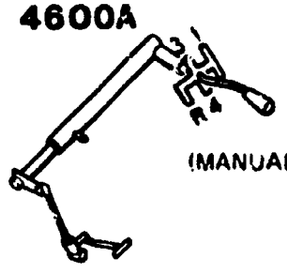

(MANUAL)

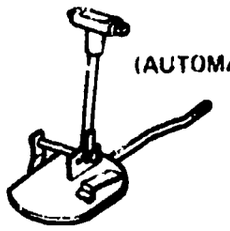

(AUTOMATIC)

CHANGE CONTROLS

17 1720A

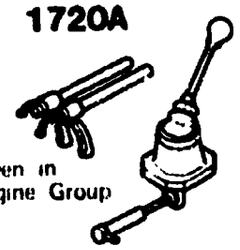

CHANGE CONTROLS (MANUAL)

CHASSIS (1/2)

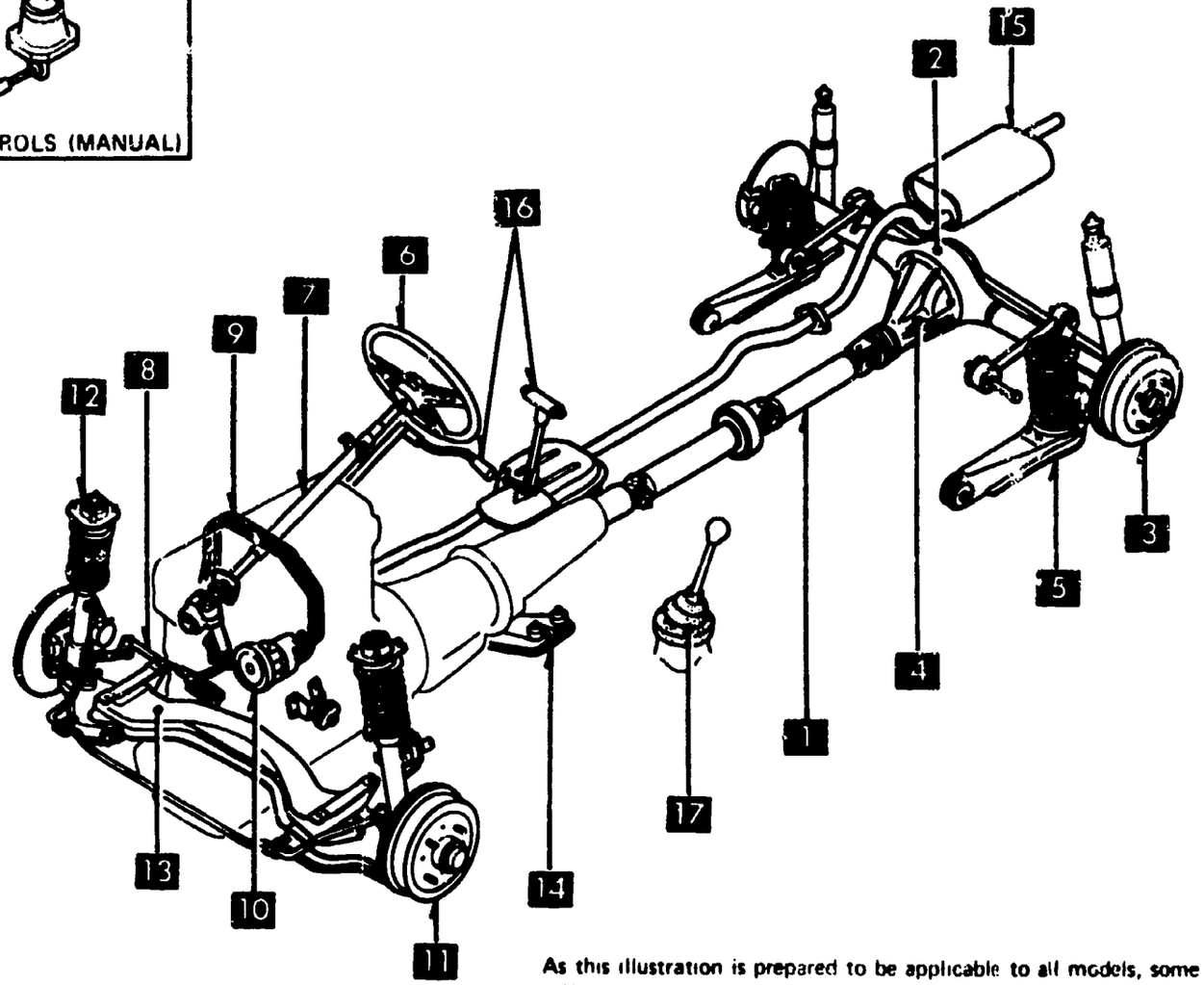

As this illustration is prepared to be applicable to all models, some parts are different in specifications from the parts listed in this parts catalog.

6 3200A



STEERING WHEEL

7 3210A



STEERING GEAR & COLUMN

15 4000A

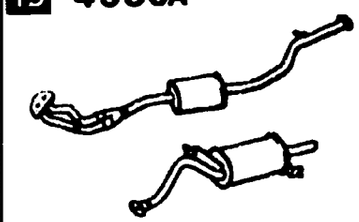

EX. SYSTEM

14 3900A

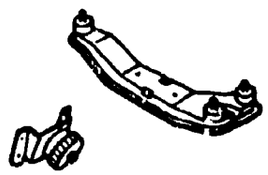

ENGINE
& T MISSION MOUNTINGS

8 3230A

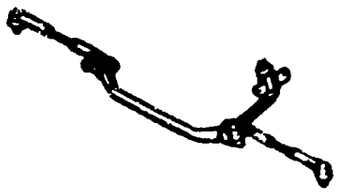

STEERING LINKAGE

13 3410A

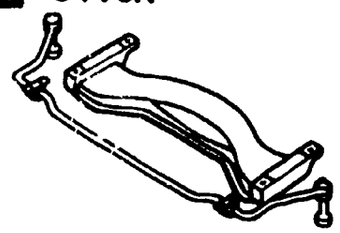

CROSSMEMBER & STABILIZER

12 3400A

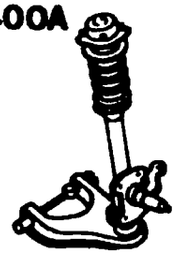

FRONT SUSPENSION

11 3300A



FRONT AXLE & BRAKES

10 3260A



VANE PUMP (POWER STEERING)

9 3240A

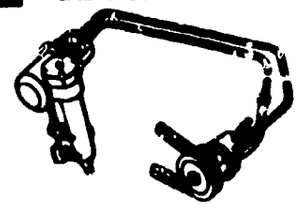

POWER STEERING SYSTEM

ILLUSTRATED SECTION REFERENCE CHART

1 3700A

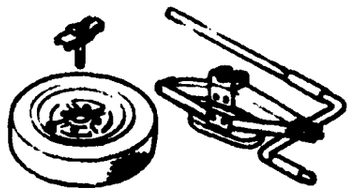

TIRE & JACK

2 4140A



CLUTCH RELEASE & MASTER CYLINDERS

3 4160A



ACCELERATOR CONTROLS

4 4200A

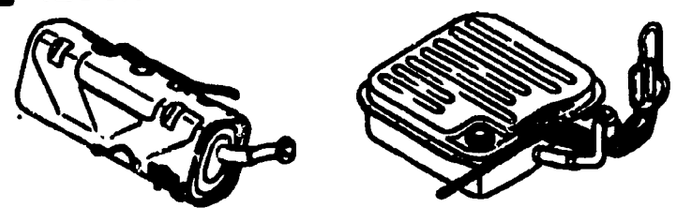

FUEL TANK

5 4300A

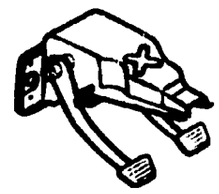

CLUTCH & BRAKE

CHASSIS (2/2)

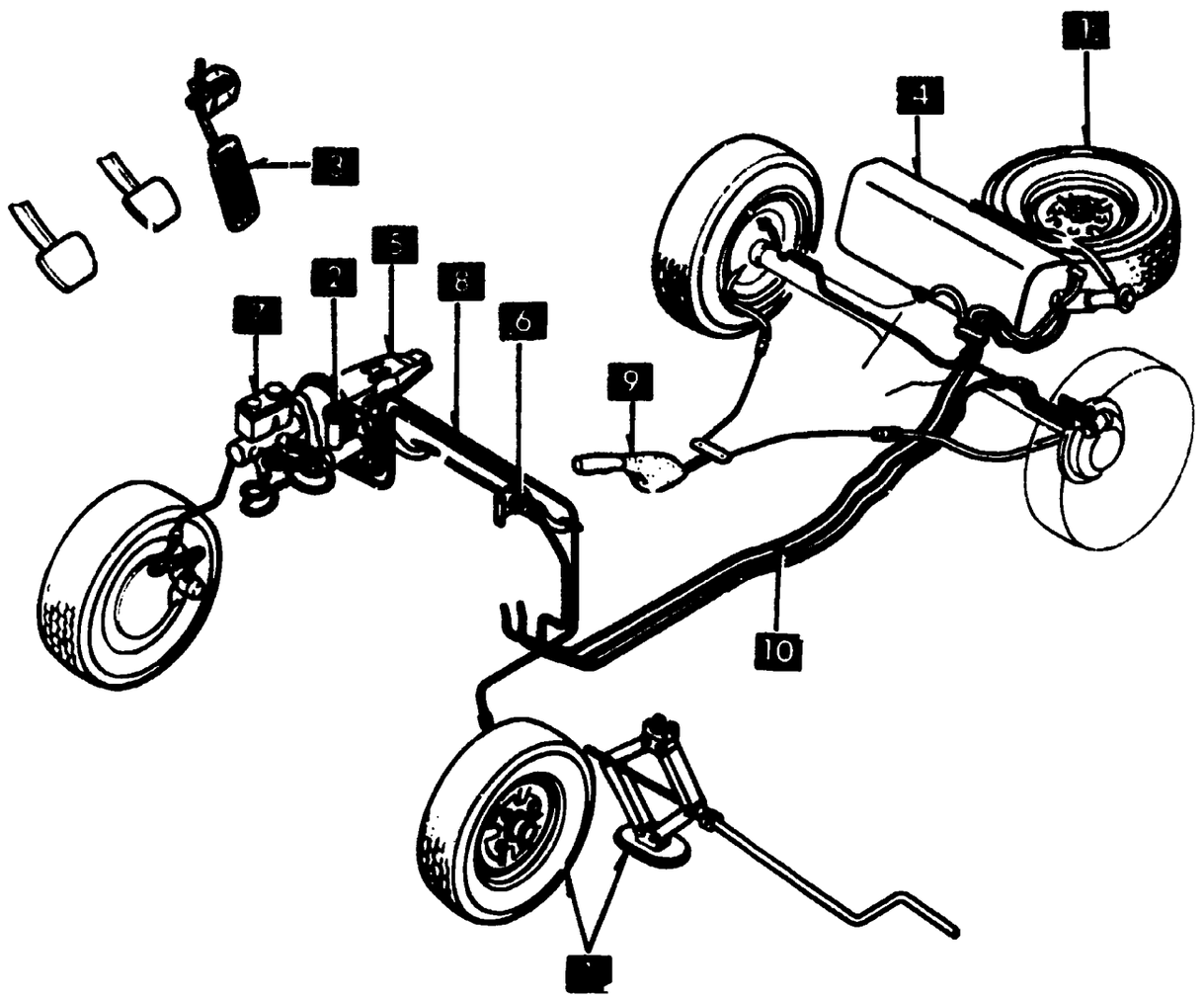

As this illustration is prepared to be applicable to all models, some parts are different in specifications from the parts listed in this parts catalog.

6 4310A



ASSIST BRAKE (FOR DRIVING SCHOOL)

7 4340A

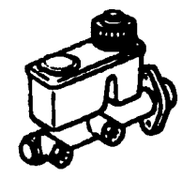

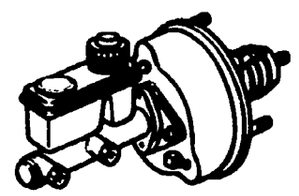

TANDEM MASTER CYL & VACUUM POWER ASSIST SYSTEM

8 4360A

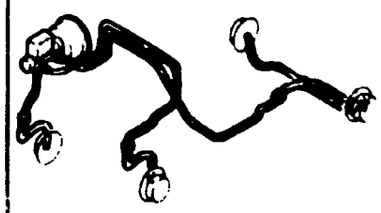

BRAKE PIPING

10 4500A

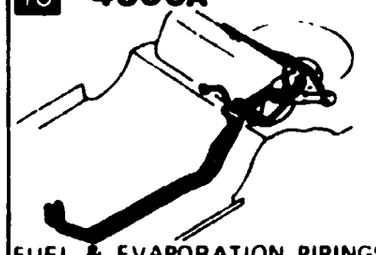

FUEL & EVAPORATION PIPINGS

9 4400A

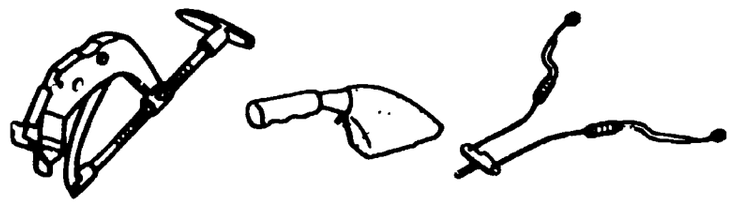

PARKING BRAKE SYSTEM

ILLUSTRATED SECTION REFERENCE CHART

1 0900A

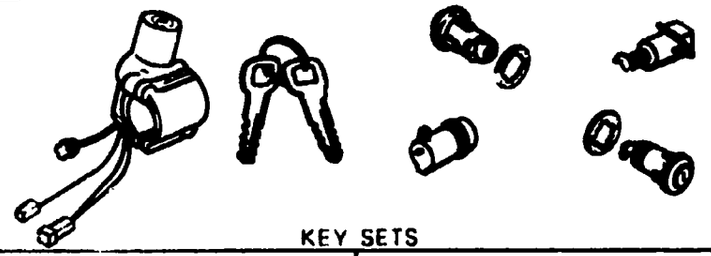

KEY SETS

2 5020A

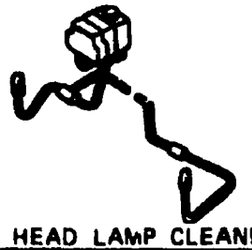

HEAD LAMP CLEANER

3 5100A

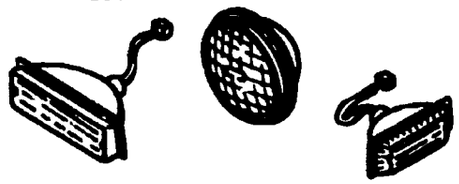

LAMPS (FRONT & SIDE)

4 5110A



LAMPS (REAR & INTERIOR)

BODY(1/3)

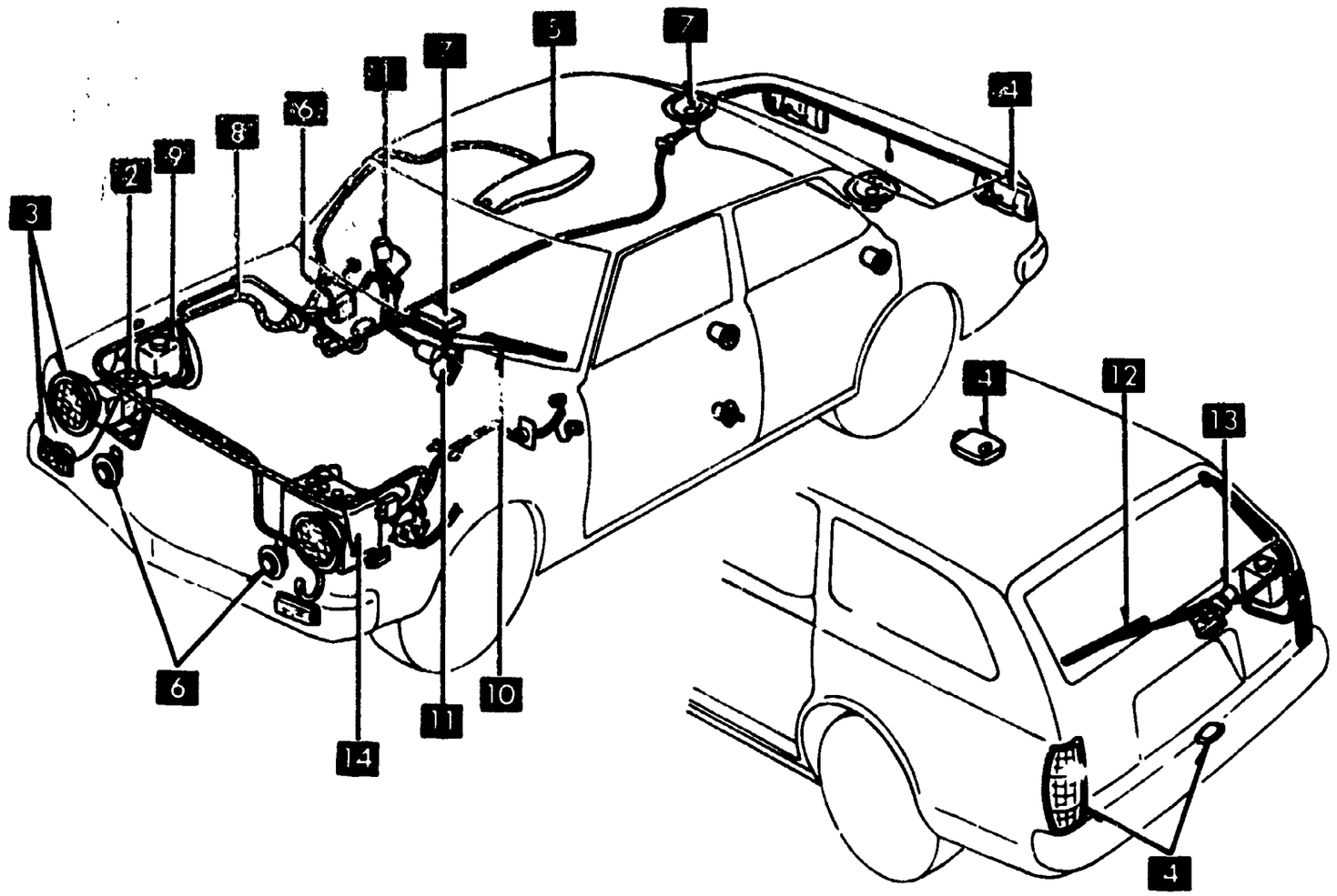

As this illustration is prepared to be applicable to all models, some parts are different in specifications from the parts listed in this parts catalog.

5 5130A

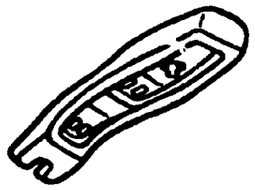

OVERHEAD CONSOLE

6 6600A

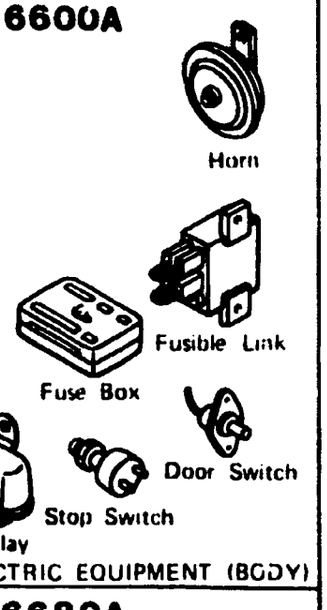

ELECTRIC EQUIPMENT (BODY)

7 6680A

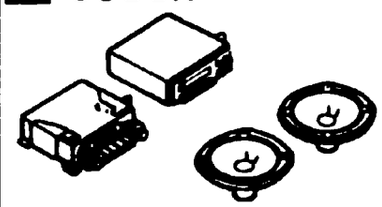

RADIO & STEREO SYSTEMS

14 1850A

BATTERY & CABLES

13 6760A



REAR WINDOW WIPER MOTOR (COMPONENTS ONLY)

12 6750A

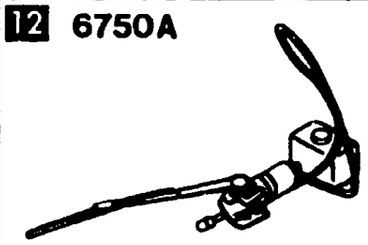

REAR WINDOW WIPER & WASHER

11 6740A



WIPER MOTOR (COMPONENTS ONLY)

10 6730A

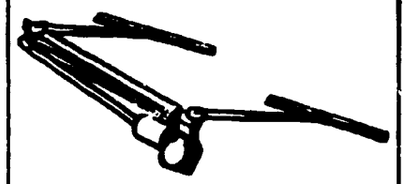

WINDSHIELD WIPER

9 6720A

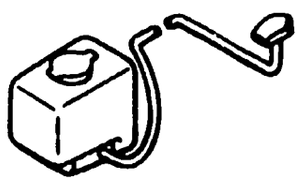

WINDSHIELD WASHER

8 6700A



WIRE HARNESS & CLAMPS

ILLUSTRATED SECTION REFERENCE CHART

1 5000A

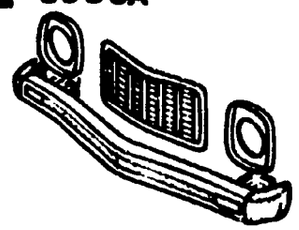

FRONT BUMPER & GRILLE

2 5010A

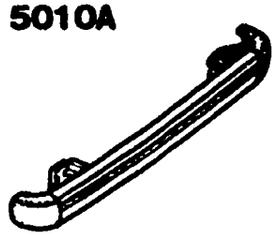

REAR BUMPER

3 5030A

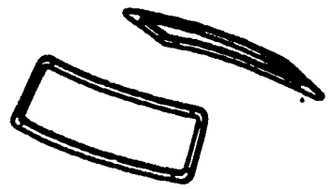

WINDOW MOULDINGS

4 5040A

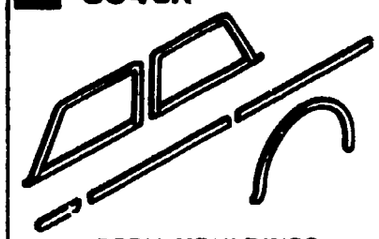

BODY MOULDINGS

5 5170A

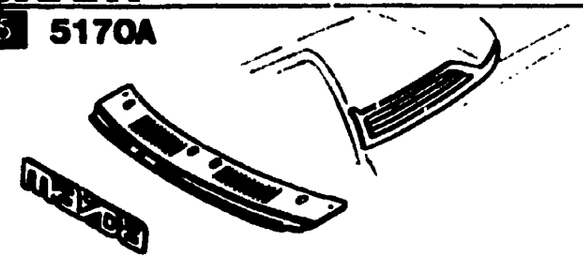

COWL & EXTRACTOR GRILLES & ORNAMENTS

18 7250A

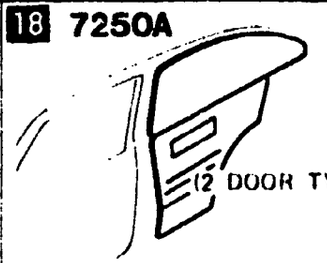

REAR WINDOW GLASS & TRIM

17 7230A

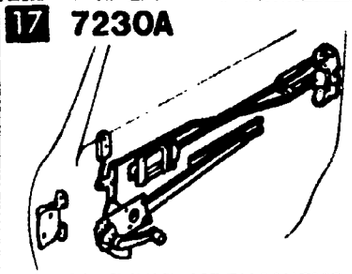

REAR DOOR MECHANISMS

16 7200A REAR DOOR

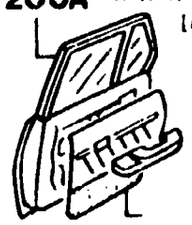

15 6330A

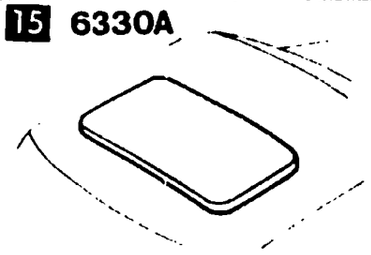

SUNROOF

BODY(2/3)

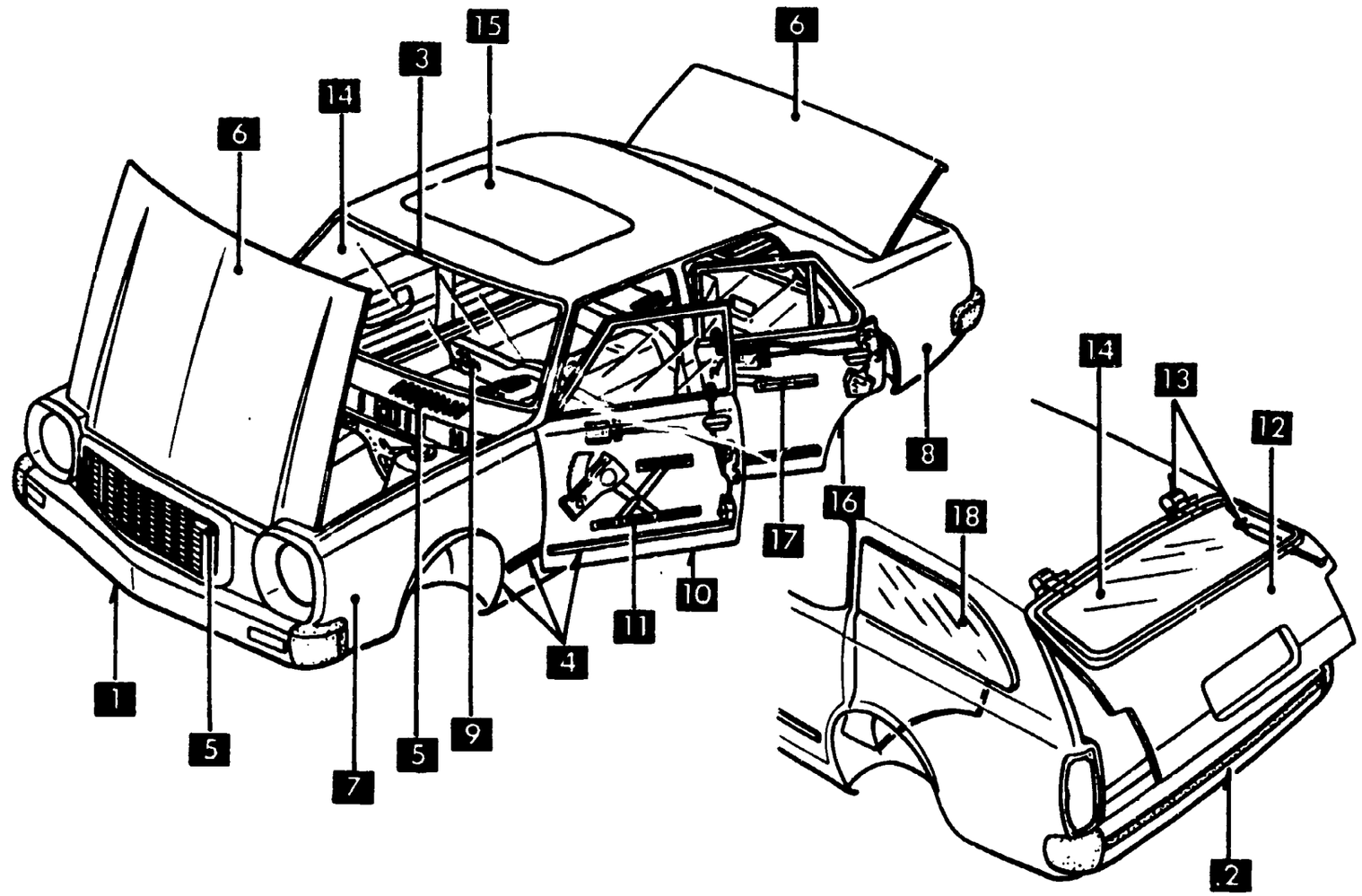

As this illustration is prepared to be applicable to all models, some parts are different in specifications from the parts listed in this parts catalog.

6 5230A

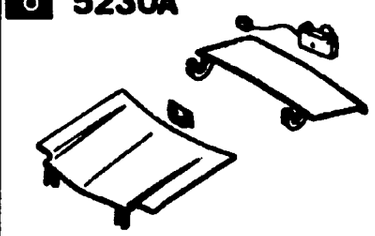

BONNET & TRUNK LID

7 5310A

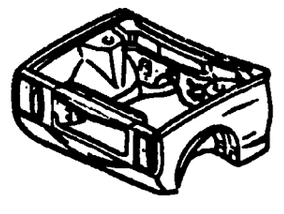

BODY PANELS (FRONT)

8 5340A

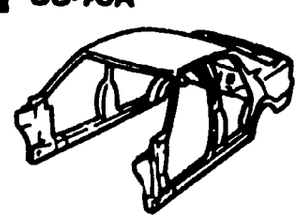

BODY PANELS (SIDE & ROOF)

9 5360A

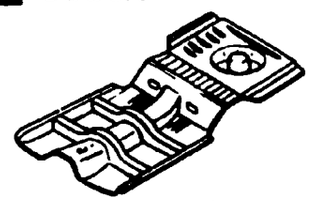

FLOOR ATTACHMENT
BODY PANELS (FLOOR)

14 6300A

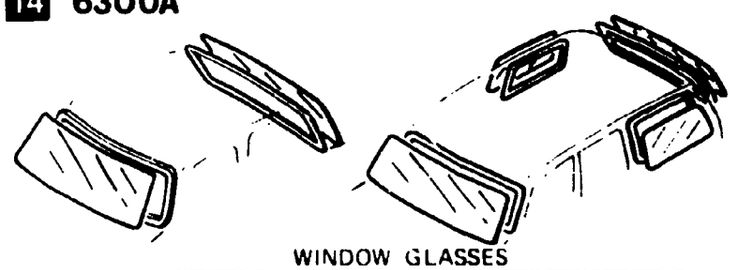

WINDOW GLASSES

13 6230A

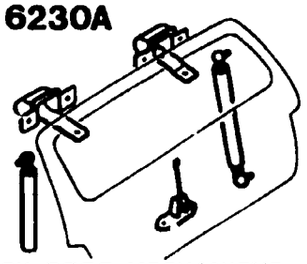

BACK DOOR MECHANISMS

12 6200A

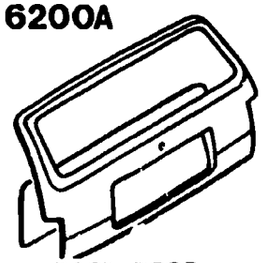

BACK DOOR

11 5830A

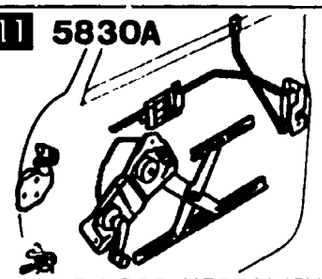

FRONT DOOR MECHANISMS

10 5800A

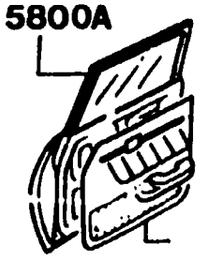

ILLUSTRATED SECTION REFERENCE CHART

1 5500A

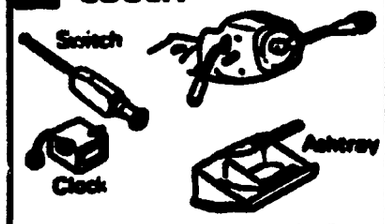

DASHBOARD EQUIPMENT

2 5540A

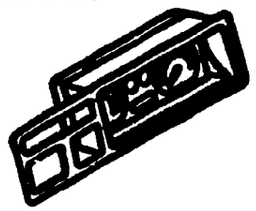

METERS

3 5560A

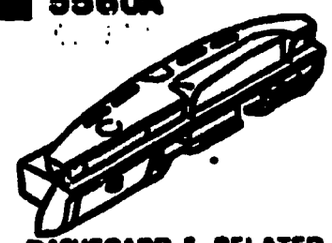

DASHBOARD & RELATED

4 5570A

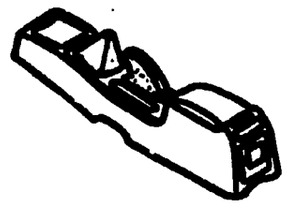

CONSOLE

5 5580A

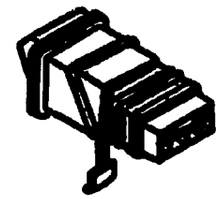

VENTILATOR

6 5700A 5710A

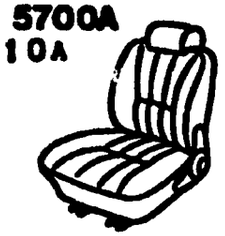

FRONT SEAT

16 6930A

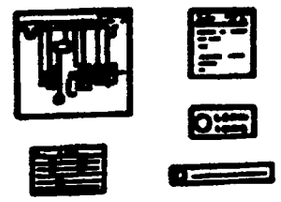

CAUTION PLATES

6 6900A



VISOR, ASSIST HANDLE & MIRRORS

15 6870A

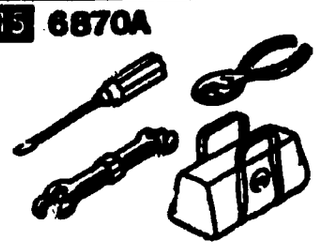

SERVICE TOOLS

14 6860A



BODY(3/3)

As this illustration is prepared to be applicable to all models, some parts are different in specifications from the parts listed in this parts catalog.

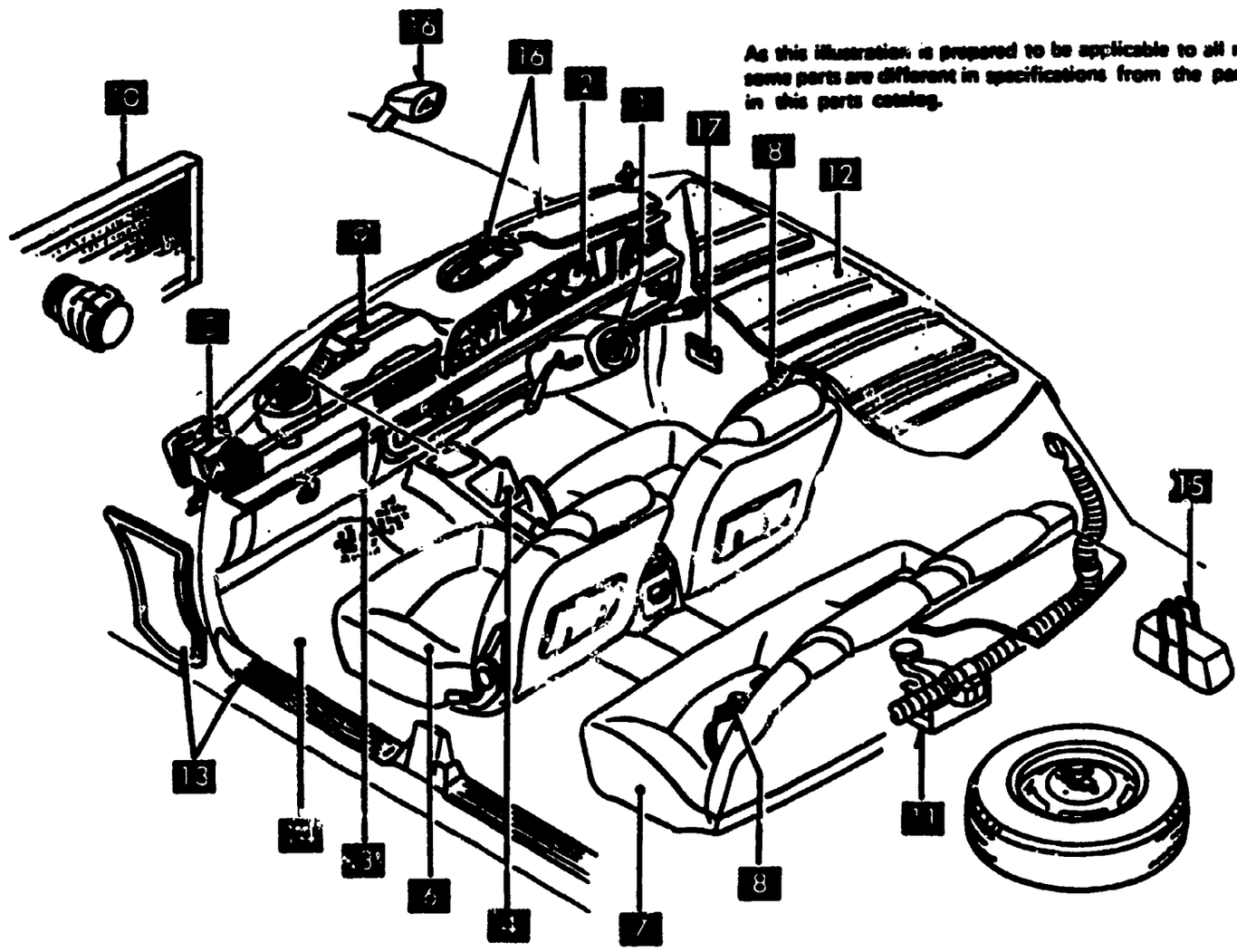

8 5760A

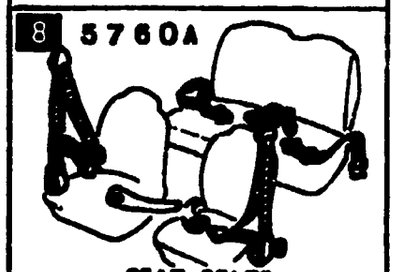

SEAT BELTS

9 6100A

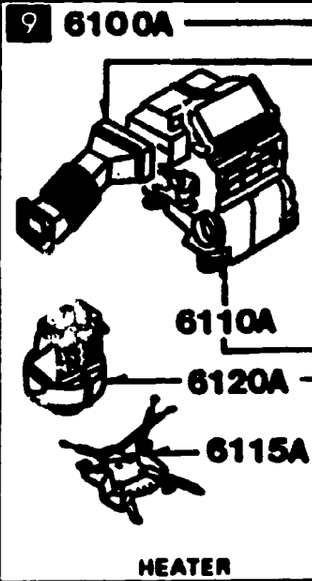

HEATER

7 6810A

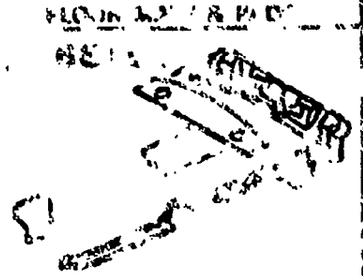

FLOOR SUPPORT PLATE

12 6840A



CEILING TRIM

11 3130A

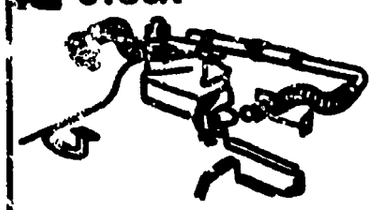

REAR COOLER

10 6130A

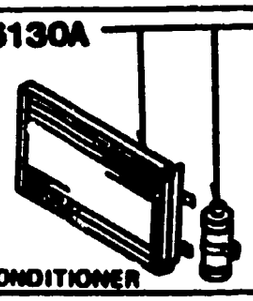

AIR CONDITIONER

(ENGINE GROUP)



MODEL IDENTIFICATION

This parts catalog has been compiled to cover the following models.
MAZDA RX-7, 1979 Year Model for U.S.A. and Canada (Manuf. From March 1978)
MAZDA RX-7, 1980 Year Model for U.S.A. and Canada (Manuf. From June 1979)

Model No.	Model/Type	Country			Roof Type		Engine (Rotary 12A)	Transmission			Model Year		V. I. N. (Chassis No.)
		U.S.A. California (CF)	U.S.A. Federal (FD)	Canada (CN)	Sunroof (SUN)	Std. Roof (STD)	(12A)	Manual 4-Speed (4S)	Manual 5-Speed (5S)	Automatic (A/T)	1979	1980	
8667	SA22C	CF				STD	12A	4S			●		SA22C-500001 ~ 568500
8668	SA22C-P	CF				STD	12A		5S		●		SA22C-500001 ~ 568500
8669	SA22C-T	CF				STD	12A			A/T	●		SA22C-500001 ~ 568500
8670	SA22C-RP	CF			SUN		12A		5S		●		SA22C-500001 ~ 568500
8671	SA22C-RT	CF			SUN		12A			A/T	●		SA22C-500001 ~ 568500
8670	SA22C		FD	CN		STD	12A	4S			●		SA22C-500001 ~ 568500
8671	SA22C-P		FD	CN		STD	12A		5S		●		SA22C-500001 ~ 568500
8672	SA22C-T		FD	CN		STD	12A			A/T	●		SA22C-500001 ~ 568500
8673	SA22C-RP		FD	CN	SUN		12A		5S		●		SA22C-500001 ~ 568500
8674	SA22C-RT		FD	CN	SUN		12A			A/T	●		SA22C-500001 ~ 568500
8343	SA22C	CF				STD	12A	4S				●	SA22C-568501 ~ 650000
8344	SA22C-P	CF				STD	12A		5S			●	SA22C-568501 ~ 650000
8345	SA22C-T	CF				STD	12A			A/T		●	SA22C-568501 ~ 650000
8348	SA22C-RP	CF			SUN		12A		5S			●	SA22C-568501 ~ 650000
8349	SA22C-RT	CF			SUN		12A			A/T		●	SA22C-568501 ~ 650000

Model No.	Model/Type	Country			Roof Type		Engine (Rotary 12A)	Transmission			Model Year		V. I. N. (Chassis No.)
		U.S.A. California (CF)	U.S.A. Federal (FD)	Canada (CN)	Sunroof (SUN)	Std. Roof (STD)	(12A)	Manual 4-Speed (4S)	Manual 5-Speed (5S)	Automatic (A/T)	1979	1980	
8340	SA22C		FD			STD	12A	4S				●	SA22C-568501 ~ 650000
8341	SA22C-P		FD			STD	12A		5S			●	SA22C-568501 ~ 650000
8342	SA22C-T		FD			STD	12A			A/T		●	SA22C-568501 ~ 650000
8346	SA22C-RP		FD		SUN		12A		5S			●	SA22C-568501 ~ 650000
8347	SA22-RT		FD		SUN		12A			A/T		●	SA22C-568501 ~ 650000
8484	SA22C			CN		STD	12A	4S				●	SA22C-568501 ~ 650000
8485	SA22C-P			CN		STD	12A		5S			●	SA22C-568501 ~ 650000
8486	SA22C-T			CN		STD	12A			A/T		●	SA22C-568501 ~ 650000
8487	SA22C-RP			CN	SUN		12A		5S			●	SA22C-568501 ~ 650000
8488	SA22C-RT			CN	SUN		12A			A/T		●	SA22C-568501 ~ 650000

LIST OF MONTHLY STARTING VIN (CHASSIS No.)

Year/Month	JAN.	FEB.	MAR.	APR.	MAY	JUN.	JUL.	AUG.	SEP.	OCT.	NOV.	DEC.
Model	78/1	78/2	78/3	78/4	78/5	78/6	78/7	78/8	78/9	78/10	78/11	78/12
RX-7	—	—	500001	502993	504977	508587	510189	512943	516625	520638	525594	531149

Year/Month	JAN.	FEB.	MAR.	APR.	MAY	JUN.	JUL.	AUG.	SEP.	OCT.	NOV.	DEC.
Model	79/1	79/2	79/3	79/4	79/5	79/6	79/7	79/8	79/9	79/10	79/11	79/12
RX-7	536458	541117	547089	554325	559740	566641	569399	574180	578961	583527	588207	592950

Year/Month	JAN.	FEB.	MAR.	APR.	MAY	JUN.	JUL.	AUG.	SEP.	OCT.	NOV.	DEC.
Model	80/1	80/2	80/3	80/4	80/5	80/6	80/7	80/8	80/9	80/10	80/11	80/12
RX-7	597273	602250	606775	611388	615692	619393	624203	629533	629964	—	—	—

LIST OF COMPLETE ASSEMBLY UNIT'S PART NUMBER

Cpt. Model No.	Engine cpt.	T/mission cpt.	Rear Axle cpt.	Cabin cpt.	Remarks
8340	8340 02 000	8867 03 000	8871 05 000	8341 07 010	Fed. 4-Speed Std. Roof
8341	8340 02 000	8868 03 000	8871 05 000	8341 07 010	Fed. 5-Speed Std Roof
8342	8342 02 000	8872 19 090	8871 05 000	8341 07 010	Fed. A/T Std. Roof
8343	8344 02 000	8867 03 000	8871 05 000	8341 07 010	Calif. 4-Speed Std. Roof
8344	8344 02 000	8868 03 000	8871 05 000	8341 07 010	Calif. 5-Speed Std. Roof
8345	8345 02 000	8872 19 090	8871 05 000	8341 07 010	Calif. A/T Std. Roof
8346	8340 02 000	8868 03 000	8871 05 000	8346 07 010	Fed. 5-Speed Sunroof
8347	8342 02 000	8872 19 090	8871 05 000	8346 07 010	Fed. A/T Sunroof
8348	8344 02 000	8868 03 000	8871 05 000	8346 07 010	Calif. 5-Speed Sunroof
8349	8345 02 000	8872 19 090	8871 05 000	8346 07 010	Calif A/T Sunroof
8484	8485 02 000	8484 03 000	8871 05 000	8341 07 010	Canada 4-Speed Std. Roof
8485	8485 02 000	8485 03 000	8871 05 000	8341 07 010	Canada 5-Speed Std. Roof
8486	8486 02 000	8872 19 090	8871 05 000	8341 07 010	Canada A/T Std. Roof
8487	8485 02 000	8485 03 000	8871 05 000	8346 07 010	Canada 5-Speed Sunroof
8488	8486 02 000	8872 19 090	8871 05 000	8346 07 010	Canada A/T Sunroof

Note: Complete assemblies are available manufactured in accordance with current production specifications only.

ABBREVIATION LIST (English)

Abbreviation	Definiton	Abbreviation	Definiton
1 ST	First	..F	Feet
2 ND	Second	FED.	Federal
3 D.	3-Door	FIX.	Fixing
3 RD	Third	FOLD.	Folding
4-SPD	4-Speed	FRT. or F.	Front
4 TH	Fourth	F/SHIFT	Floor Shift
5 D.	5-Door		
5 SPD	5 Speed		
14-FT	14-Feet Box		
		..G	Grams
		GAS.	Gasoline
		GEN.	General
..A	Ampere		
ACCEL.	Accelerator		
ADJ.	Adjust		
A.D.R.	Australia Design Rule	HARN	Harness
AIR CON.	Air Conditioner	HEAT. or HEA.	Heater
ALUMI	Aluminum	HIGHT.	High-Tension
A/REST	Arm Rest	H/LAMP	Headlamp
ASS'Y	Assembly	H.B.RE.	Hatchback Release
ATT.	Attachment	H/TOP or H/T	Hardtop
A/T	Automatic Transmission		
AUST.	Australia		
AUTO.	Automatic		
		IG. or IGN.	Ignition
		IN.	Inlet
		IND.	Indicator
BAL	Balance	INJ.	Injection
B/DOOR	Back Door	INN.	Inner
BDY.	Body	INS.	Insulation
BELT.	Beltline	INST.	Instrument
BHG.	Bearing	INT.	Interior
BRKT.	Bracket	INTMT.	Intermittent
BRT.	Britain (=The United Kingdom)		
BUMP.	Bumper		
		..L	Liters
		L=	Length
		(L) or L	Left
(C), C. or CTR.	Center	L/BODY	Long Body
CABN.	Cabin	L/BOX	Long Box
CALIF	California	LH. SIDE	Left Hand Side
CARB.	Carburettor	L.H.D.	Left Hand Drive
CE	Conventional Engine (=Reciprocating Engine)	LWR.	Lower
CLG	Ceiling	L/VAN	Light Van
COMB	Combination		
COMP	Companion		
CONN	Connector or Connecting	MA. CYL.	Master Cylinder
CONS	Console	MAINT.	Maintain
COVR	Cover	MLD. or MLDG.	Moulding
CPT	Complete Assembly	MPX.	Multiplex
C/SHIFT	Column Shift	MT.	Mounting
CYL	Cylinder	M/T	Manual Transmission
D	Door	NO.	Number
D=	Diameter	NON T/CABIN	Non Tilt Cabin
DAY & NIGHT AJST	Day & Night Adjust Table	NOR. ROOF	Normal Roof
D/CABIN	Double Cabin	NOZ.	Nozzle
DEF	Defroster		
DIAPH	Diaphragm		
DIFF	Differential		
DISC/B	Disc Brake	ORD. BY	Order By
DIST	Distributor	O.S.	Oversize
DR	Door	OUT.	Outer
DRUM/B	Drum Brake		
D/TIRE	Dual Tires		
DX	Deluxe		
DUMP	Dump Truck	P.	Panel
		(P)	Primary
		PARK. or PARKG.	Parking
		PASS.	Passenger
EGR	Exhaust Gas Recirculation	P. BOARD	Partition Board
ELEC	Electric	P.C.V.	Positive Crankcase Ventilation
EM	Emission Control System		
ENEGY or ENGY	Energy	PHLPPNS	The Philippines
ENG	Engine	PILR.	Pillar
EQUIP	Equipment	PKG	Package
EX	Exhaust	PNL	Panel
EXC	Except	POSIT.	Positive
EXTRACT	Extractor	PP	Polypropylene
		P.S.	Power Steering
		P/S	Power Steering

Abbreviation	Definition	Abbreviation	Definition
P.T.O.	Power Take Off	SW.	Switch
P/VAN	Panel Van	S. WASHER	Screen Washer
P/W or P. WINDOW	Power Window	SWD.	Sweden
		SYNC.	Synchronizer
QTR.	Quarter		
		..T	Tons
		T=	Thickness
		T/CABIN	Tilt Cabin
(R) or R	Right	T/CEILING	Top Ceiling
RAD.	Radiator	TH.	Throttle
RE.	Rotary Engine	THERM.	Thermostat
RECIPRO	Reciprocating Engine (=Conventional Engine)	THROT.	Throttle
		T/MISSION	Transmission
REGUL.	Regulator	T/L	Tubeless
REG. CABN	Regular Cabin	T/STEERING	Tilt Steering
REL.	Release		
REM. CON. or REMO. CON.	Remote Controlled		
RET.	Return	U.K.	The United Kingdom
RETAIN.	Retaining	UP	Upper
REV.	Reverse	URETANE	Urethane Rubber
R. H. SIDE	Right Hand Side	U.S.	Undersize
R.H.D.	Right Hand Drive		
RR. or R.	Rear		
		..V	Volts
		V.	Valve
(S)	Secondary	VAC.	Vacuum
SAFE.	Safety	Vent.	Ventilator, Ventilation
S/BODY	Short Body		
S/BOX	Short Box		
SELECT	Selective use		
SET. TYPE	Separate Type	..W	Watts
SIG.	Signal	W=	Width
SILVER M.	Silver Metallic	W/...	With
SNGL TIRE	Single Tire	W/CHASSIS	Windshield Chassis
SOL.	Solenoid	W/GER.	West Germany
SPEC.	Specification	or W. GERMANY	
SPEEDO	Speedometer	WIND.	Window
SPL. TYPE	Split Type	W/O	Without
SPG.	Spring	W. PUMP	Water Pump
SPK.	Speaker	WSHLD	Windshield
ST.	Steering	WSTR. or WTHSTP.	Weatherstrip
STA. WAGON	Station Wagon	W/T	With Tube
STAB.	Stabilizer		
SUB T/MISSION	Sub Transmission		
STD.	Standard		
S/TIRE	Single Tire		

INTERCHANGEABILITY CODE LIST

Code	Definition	
AN	⟷ (Both Ways)	A new part and the former part are fully interchangeable.
A	→ (One Way)	A new part can be used in place of the former part, but the former part cannot be used in place of a new part.
C	Plus	A new part with some additional part(s) can be used in place of the former part.
G	Plus	Some modification work is required to use a new part in place of the former part.
S	← (One Way Backward)	The former part can be used in place of a new part, but a new part cannot be used in place of the former part.

SECTION NUMBER INDEX (ENGINE)

STARTING LOCATION	SECTION No	SECTION NAME
1–C2	1000A	SHORT ENGINE & GASKET SET
1–D2	1030A	ROTOR HOUSING
1–G2	1040A	HOUSING (FRONT & REAR)
1–C3	1100A	ECCENTRIC SHAFT & FLYWHEEL
1–F3	1110A	ROTOR
1–C4	1300A	IN. MANIFOLD
1–D4	1310A	THERMAL REACTOR
1–E4	1320A	FUEL SYSTEM
1–G4	1330A	AIR CLEANER
1–H4	1350A	STARTING ASSIST SYSTEM
1–I4	1360A	CARBURETOR
1–F6	1371A	EMISSION CONTROLS (AIR PUMP & CONTROL VALVE)
1–H6	1380A	EMISSION CONTROLS (EX. SIDE)
1–C8	1400A	OIL PUMP & FILTER
1–F8	1500A	COOLING SYSTEM
1–K8	1600A	CLUTCH (MANUAL)
1–C9	1700A	T/MISSION CASE (MANUAL)
1–G9	1710A	T/MISSION GEAR (MANUAL)
1–E10	1720A	CHANGE CONTROLS (MANUAL)
1–C11	1800A	ELECTRICAL SYSTEM (ENGINE)
1–H11	1820A	DISTRIBUTOR

STARTING LOCATION	SECTION No.	SECTION NAME
1–L11	1830A	ALTERNATOR
1–D12	1840A	STARTER
1–H12	1850A	BATTERY & CABLES
1–C13	1910A	CONVERTER, OIL PUMP & PIPING (AUTOMATIC T/MISSION)
1–F13	1920A	CASE & MAIN CONTROLS (AUTOMATIC T/MISSION)
1–K13	1930A	CLUTCH & PLANETARY GEAR (AUTOMATIC T/MISSION)
1–D14	1940A	LOW, REVERSE & GOVERNOR (AUTOMATIC T/MISSION)
1–G14	1950A	MANUAL LINKAGE (AUTOMATIC T/MISSION)

THE FRAMES IN THIS COLUMN INDICATE :

1--C2	1000A	SHORT ENGINE & GASKET SET
1--D2	1030A	ROTOR HOUSING
1--G2	1040A	HOUSING (FRONT & REAR)

© 1983 Toyo Kogyo Co., Ltd.
MAY 1983

1000A SHORT ENGINE & GASKET SET

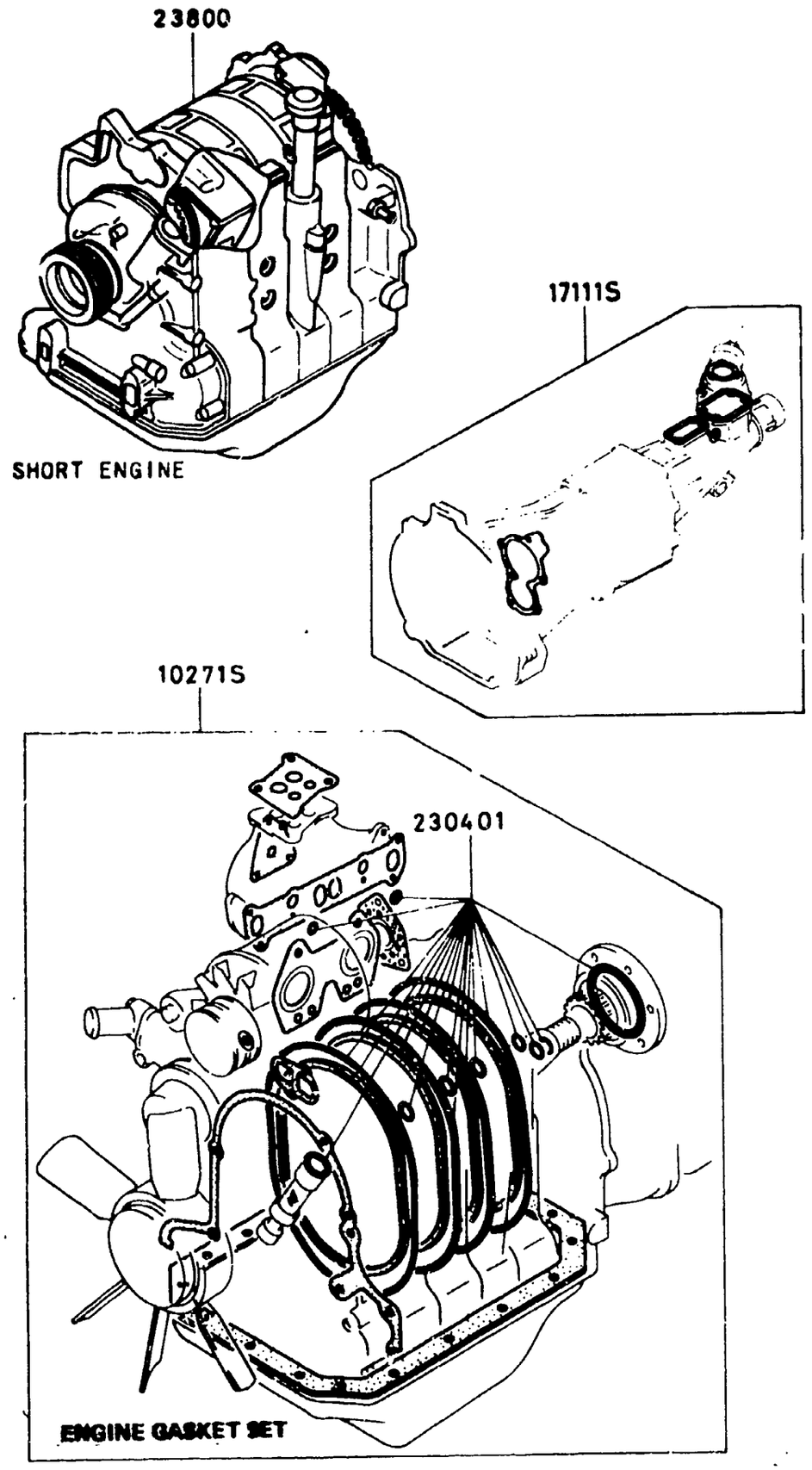

1000A-1* SHORT ENGINE & GASKET SET

D-CODE (Key No.)	PART NAME	PART No.	Qty.	MODEL/DESCRIPTION	VIN (Chassis No.)
10271S	GASKET SET,ENGINE POCHETTE DE JOINTS MOTEUR	8344-99-100	1	80 MODEL CALIF.	SA22C .. 568501-
		8871-99-100	1	79 MODEL 80 MODEL FED. 80 MODEL CANADA	
17111S	GASKET SET,T/MISSION	8540-89-175	1		
230401	RING SET,"O	1757-23-0408	1		
23800	ENGINE,SHORT BLOC MOTEUR	8341-23-200	1	80 MODEL FED. M/T 80 MODEL CANADA M/T	SA22C .. 568501-
		8342-23-200	1	80 MODEL FED. A/T 80 MODEL CANADA A/T	SA22C .. 568501-
		8344-23-200	1	80 MODEL CALIF. M/T	SA22C .. 568501-
		8345-23-200	1	80 MODEL CALIF. A/T	SA22C .. 568501-
		8871-23-200	1	79 MODEL M/T	SA22C .. 500001 -568500
		8872-23-200	1	79 MODEL A/T	SA22C .. 500001 -568500

1030A ROTOR HOUSING

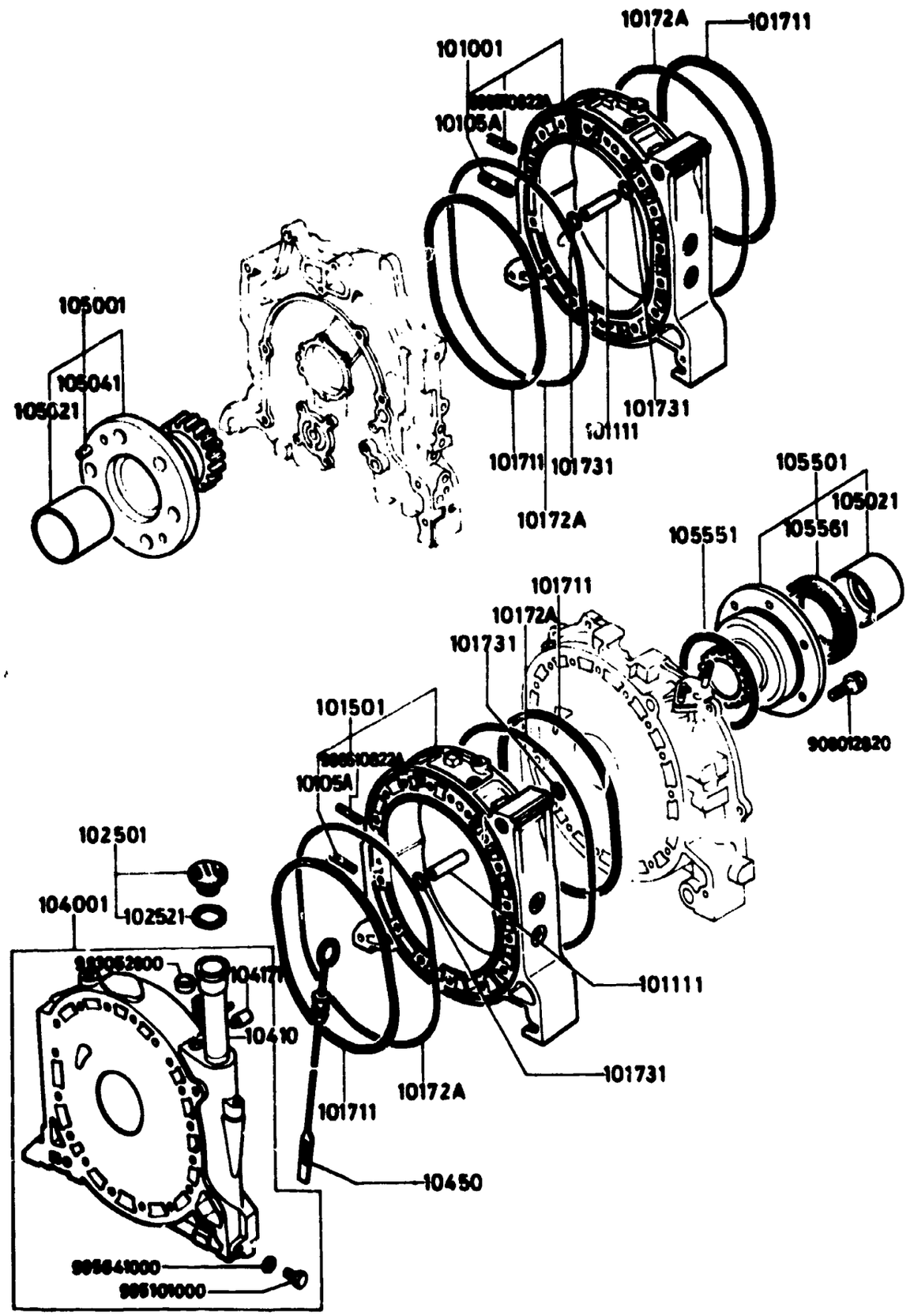
101001
10172A
101711
10105A
105001
105041
105021
101731
101111
101711
101731
10172A
105501
105021
105561
105551
101711
10172A
101731
101501
10105A
102501
104001
102521
104171
10410
101111
101731
10172A
101711
10450
101731
90810820
90810822A
90810820
90810822A
90810820
90810822A

1030A ROTOR HOUSING

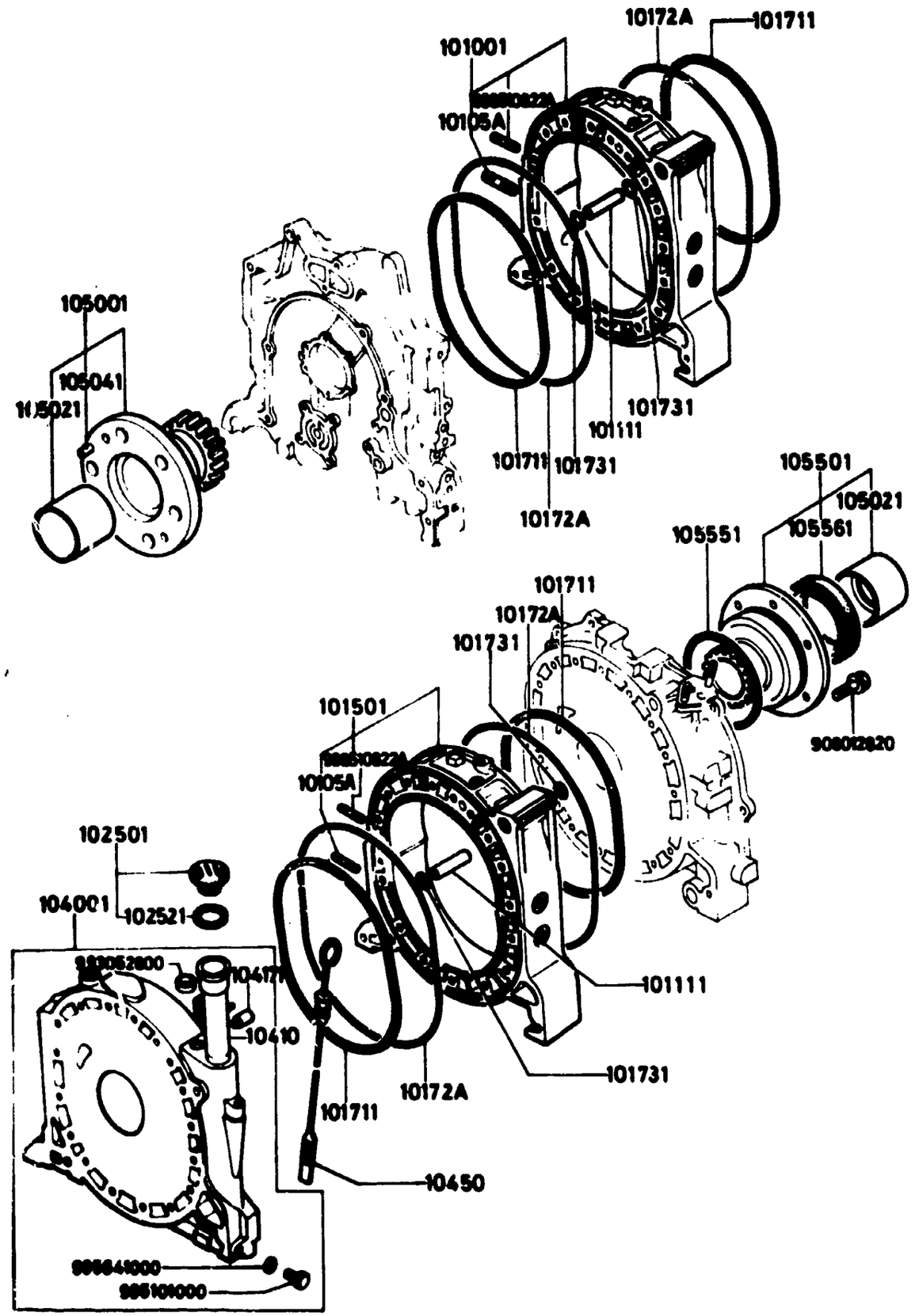

D-CODE (Key No.)	PART NAME	PART No.	Qty.	MODEL DESCRIPTION	VIN (Chassis No.)
102501 CONT'D		8871-10-250	1		SA22C .. 567523-
102521	GASKET,OIL CAP JOINT BOUCHON HUILE	0324-10-252	1		SA22C .. 500001 -567523
		8871-10-252	1		SA22C .. 567524-
104001	HOUSING,INTERMEDIATE FLASQUE,INTERMEDIAIRE CASCO INTERMEDIO	8341-10-400	1	80 MODEL CANADA 80 MODEL FED.	SA22C .. 568501-
		8344-10-400	1	80 MODEL CALIF.	SA22C .. 568501-
		8871-10-400	1	79 MODEL	SA22C .. 500001 -568500
10410	PIPE,OIL FILLER TUYAU REMPLISSEUR D'HUILE	8871-10-410A	1		
104171	JOINT,PIPE RACCORD JUNTA DE CANO	8562-10-417	1		
10450	GAUGE,OIL LEVEL JAUGE, NIVEAU D'HUILE MANOMETRO, NIVEL ACEITE	3565-10-830	1		
105001	GEAR,STATIONARY-FRT. PIGNON STATIONNEMENT AV. ENGRANAJE, FIJO DELANTERO	3743-10-500	1	79 MODEL	SA22C .. 500001 -568500
	<AN>	8341-10-500	1	80 MODEL	SA22C .. 568501-
105021	BEARING,MAIN COUSSINET RODAMIENTO,PRINCIPAL	0820-10-502B	2		
105041	PIN,KNOCK CALE DE COGNEMENT PASADOR A PRESION	0839-10-504	1		
105501	GEAR,STATIONARY-RR. PIGNON STATIONNEMENT ARR. ENGRANAJE, FIJO TRASERO	3743-10-550A	1		
105551	RING,'O' JOINT 'O' SELLO DE GOMA 'O'	0813-10-555A	1		
105561	SEAL,OIL	1668-10-556A	1		

1030A ROTOR HOUSING

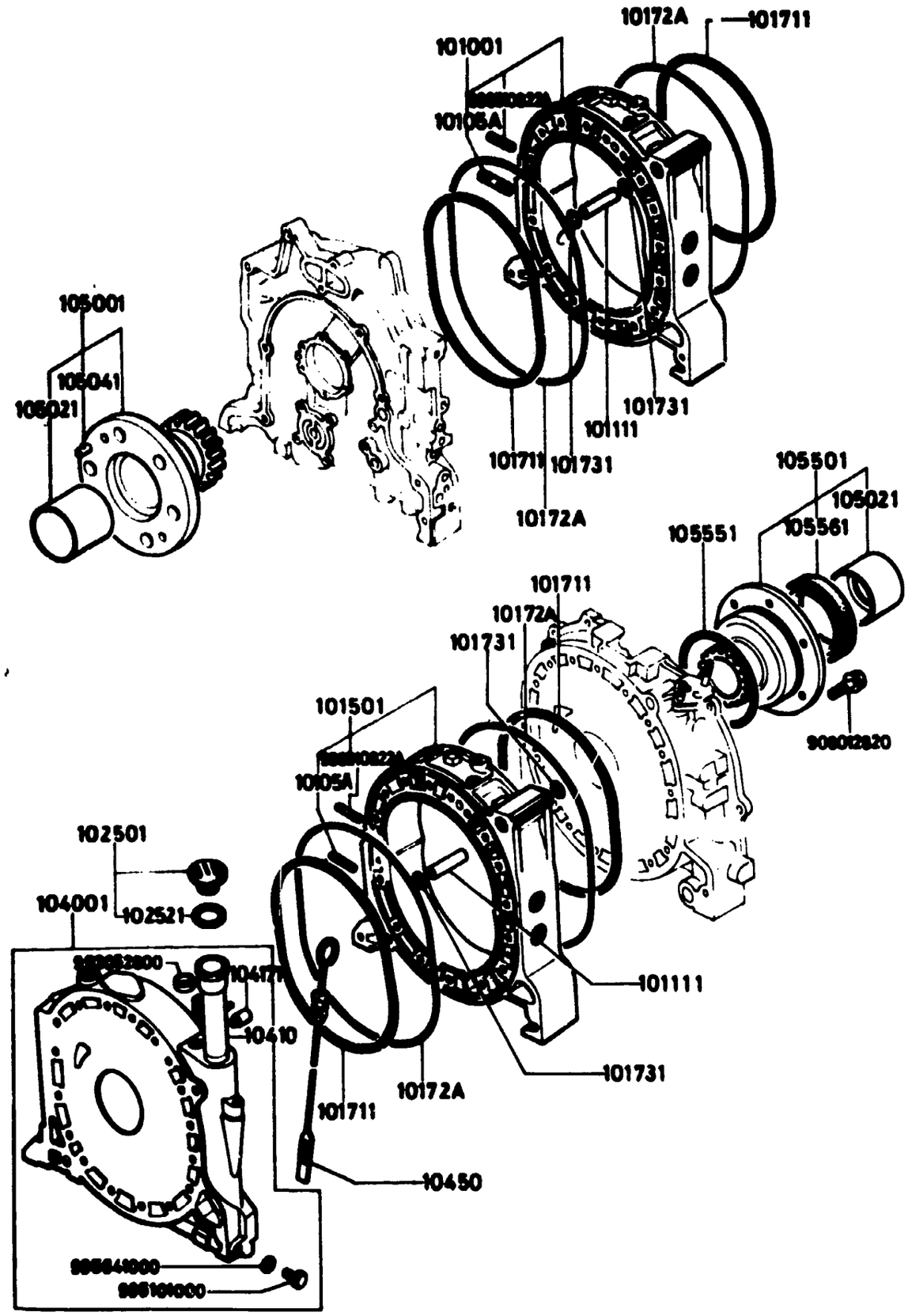

1030A-3* ROTOR HOUSING

D-CODE (Key No.)	PART NAME	PART No.	Qty.	MODEL DESCRIPTION	VIN (Chassis No.)
105561	ARRET D'HUILE	1668-10-556A			
CONT'D	RETEN,ACEITE				

1040A HOUSING (FRONT & REAR)

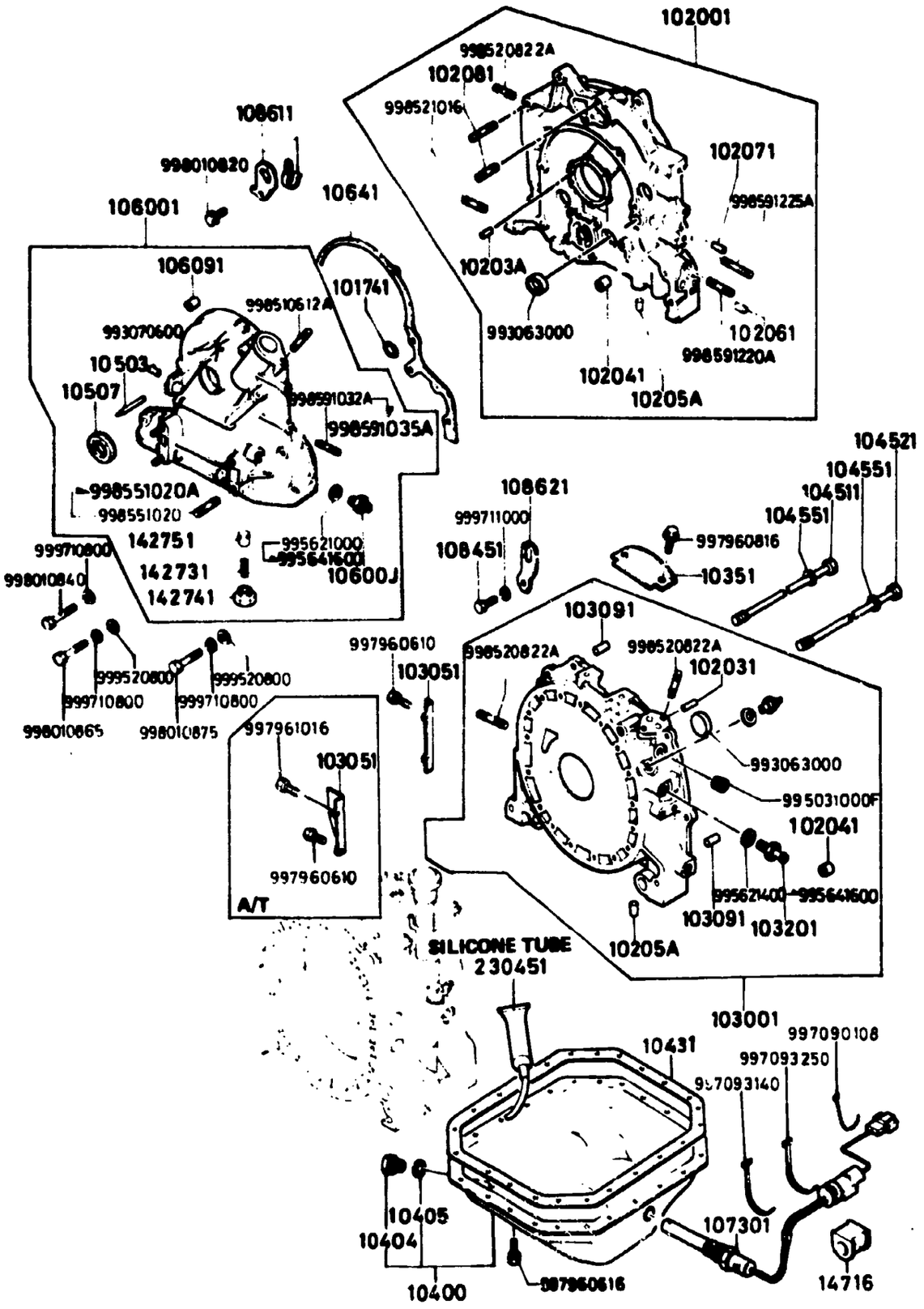

1040A-1 HOUSING (FRONT & REAR)

D-CODE (Key No.)	PART NAME	PART No.	Qty.	MODEL DESCRIPTION	VIN (Chassis No.)
101741	RING,'O' JOINT 'O' SELLO DE GOMA 'O'	8527-10-174	1		
102001	HOUSING,FRONT CARTER AV.	8871-10-200A	1	79 MODEL	SA22C .. 500001 -568500
		8981-10-200	1	80 MODEL	SA22C .. 568501-
10203A	PIN,DOWEL GOUJON	0839-10-203	1		
102031	PIN,DOWEL GOUJON	0820-10-203	1		SA22C .. 500001 -611386
		*0839-10-203	1		SA22C .. 611387-
102041	DOWEL,TUBULAR RACCORD BOTON TUBULAR	1757-10-309	2		
10205A	PLUG,BLIND BOUCHON TAPON CIEGO	8562-10-205	4		
102061	PLUG,BLIND BOUCHON TAPON CIEGO	175?-10-206A	1		
102071	PLUG,BLIND BOUCHON TAPON CIEGO	1757-10-207A	1		
102081	STUD GOUJON PRISIONERO	1757-10-208	4		
103001	HOUSING,REAR CARTER ARR.	8341-23-095	1	80 MODEL	SA22C .. 568501-
		8871-23-095	1	79 MODEL	SA22C .. 500001 -563500
103051	COVER,DUST CACHE,POUSSIERE COBERTOR PARA POLVO	1029-10-305	1	A/T	SA22C .. 500001 -627592
	<A >*	1480-10-305	1	M/T	SA22C .. 627593-
	<A >*	1481-10-305	1	A/T	SA22C ..

1040A HOUSING (FRONT & REAR)

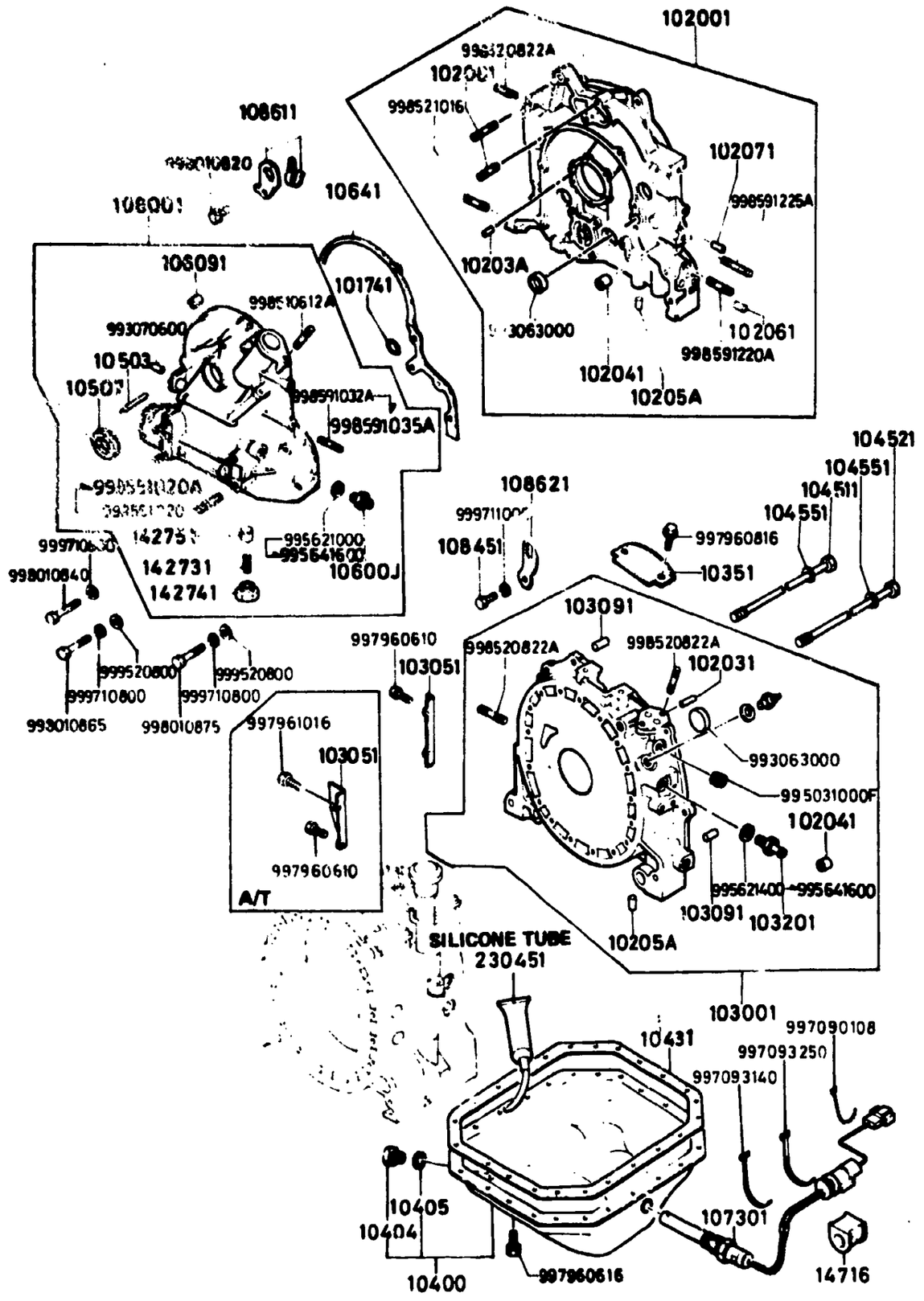

1040A-2 HOUSING (FRONT & REAR)

D-CODE (Key No.)	PART NAME	PART No.	Qty.	MODEL DESCRIPTION	VIN (Chassis No.)
103051 CONT'D		1481-10-305			627593-
		1757-10-305	1	M/T	SA22C .. 500001 -627592
103091	PIN,TUBULAR RONDELLE TUBULAIRE EJE, TUBULAR	1757-10-309	4		
103201	CONNECTOR,HOSE RACCORD DE DURITE UNION PARA MANGUERA	0866-10-320A	1		
10351	COVER,DUST CACHE,POUSSIERE COBERTOR PARA POLVO	1758-10-351	1	M/T	
10400	PAN,OIL CARTER D'HUILE CARTER	8871-23-075	1		
10404	PLUG,DRAIN BOUCHON DE VIDANGE TAPON DRENAJE	9951-11-400	1		
10405	GASKET,DRAIN PLUG JOINT, BOUCHON VIDANGE EMPAQUE, TAPON DRENAJE	9956-21-400	1		SA22C .. 500001 -554324
		9956-41-400	1		SA22C .. 554325-
10431	GASKET,OIL PAN JOINT, CARTER HUILE EMPAQUE, CARTER	0839-10-711	1		
104511	BOLT,TENSION BOULON	1015-10-451B	16 17	80 MODEL 79 MODEL	
104521	BOLT,TENSION BOULON	1015-10-452A	1		
104551	WASHER,SEAL RONDELLE D'ETANCHEITE	0839-10-455	17 18	80 MODEL 79 MODEL	
10503	PIN,TOP INDICATOR TIGE, REPAIRE D'AVANCE EJE MARCADOR SUPERIOR	0820-10-631B	1	79 MODEL	SA22C .. 500001 -563500
		8871-10-631	1	80 MODEL	SA22C .. 568501-
10507	SEAL,OIL ARRET D'HUILE	0820-10-605	1		

1040A HOUSING (FRONT & REAR)

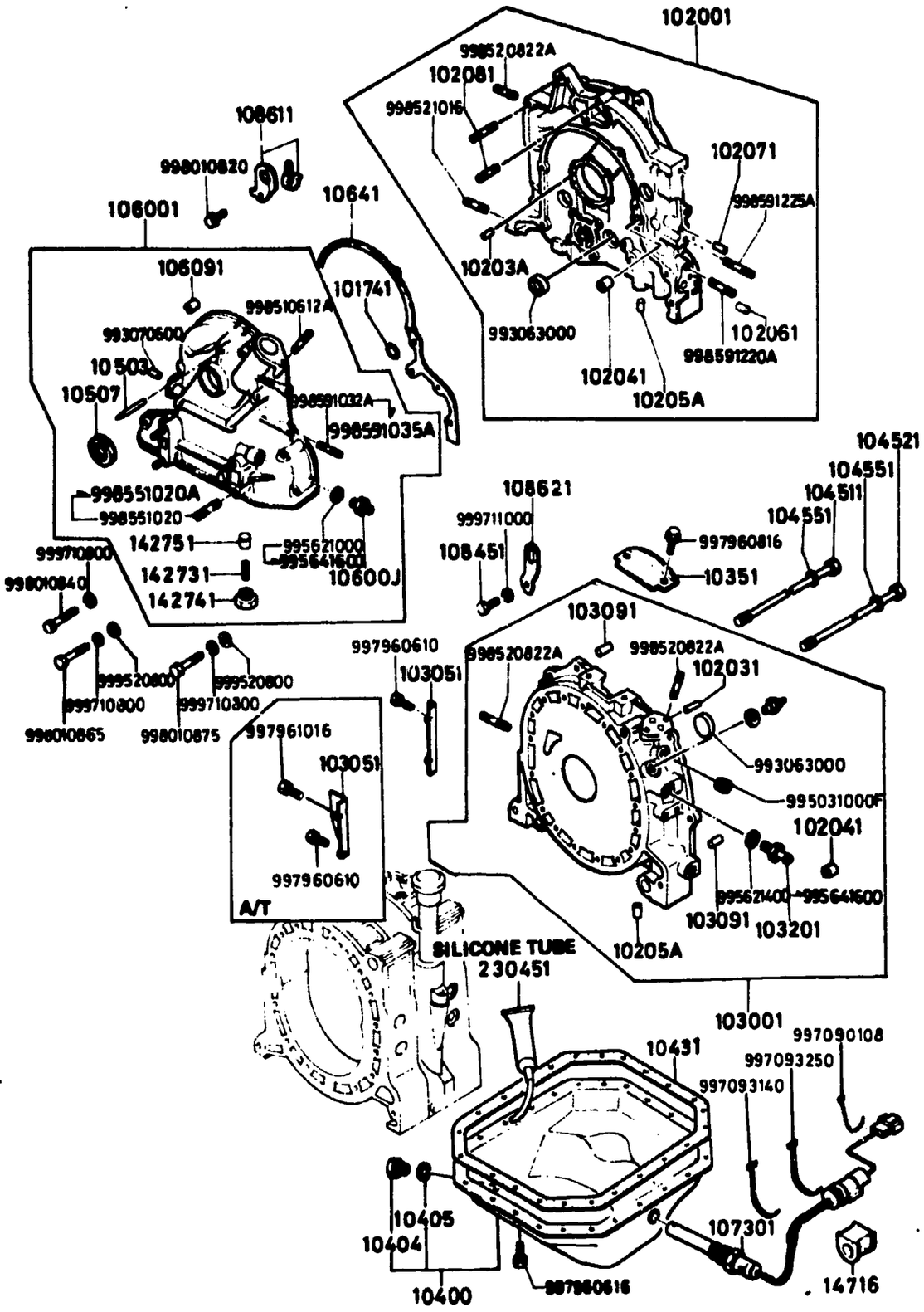

1040A-3 HOUSING (FRONT & REAR)

D-CODE (Key No.)	PART NAME	PART No.	Qty.	MODEL/DESCRIPTION	VIN (Chassis No.)
10507 CONT° D	RETEN,ACEITE	0820-10-605			
10600J	JOINT,UNION RACCORD	9938-41-200	1		
106001	COVER,FRONT <C > CACHE AV. COBERTOR DELANTERO	*1480-10-600	1		SA22C .. 619393-
		1757-10-600B	1		SA22C .. 500001 -516624
	<A >	3523-10-600	1		SA22C .. 516625 -619392
106091	PIN,SPRING AXE DE RESSORT	1757-10-609	1		
10641	GASKET,FRONT COVER JOINT, CARTER AV.	8527-10-641	1		
107301	SENSOR, OIL LEVEL CONTACT NIVEAU HUILE	8341-10-730A	1	80 MODEL	SA22C .. 568501-
		8553-10-730D	1	79 MODEL	SA22C .. 500001 -568500
108451	BOLT BOULON PERNO	8555-10-845	1		
108611	HANGER,ENGINE CROCHET,MOTEUR SOPORTE DE MOTOR	3565-10-860B	1		SA22C .. 500001 -569398
		3565-10-861A	1		SA22C .. 569399-
108621	HANGER,ENGINE CROCHET,MOTEUR SOPORTE DE MOTOR	8871-10-862	1		
142731	SPRING RESSORT RESORTE	0839-14-273A	1		
142741	PLUG BOUCHON	0839-14-274	1		
142751	PLUNGER,CONTROL	0839-14-115	1		

1040A HOUSING (FRONT & REAR)

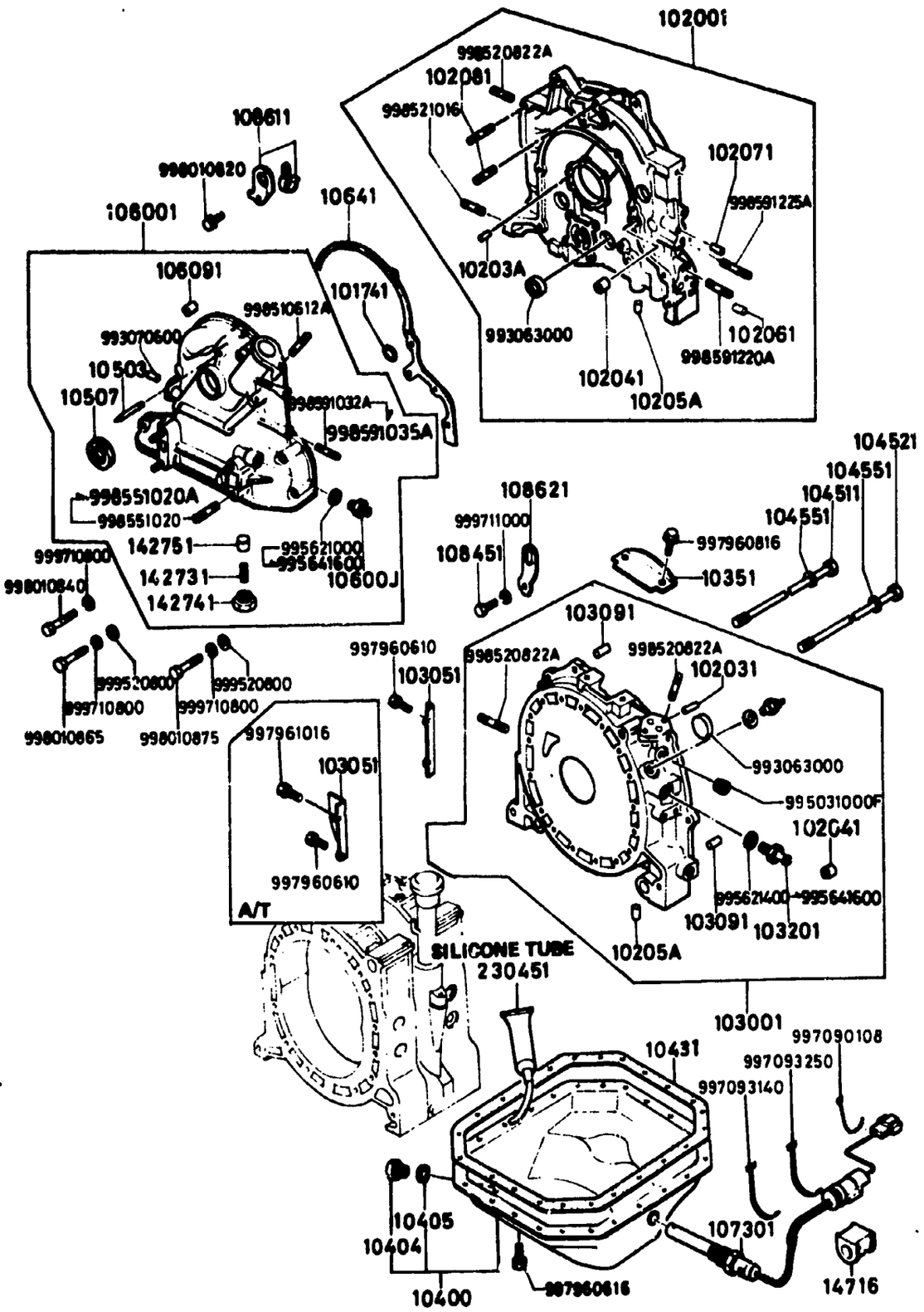

1040A-4* HOUSING (FRONT & REAR)

D-CODE (Key No.)	PART NAME	PART No.	Qty.	MODEL/DESCRIPTION	VIN (Chassis No.)
142751 CONT'D	PLONGEUR DE SURETE PISTON CONTROL	0839-14-115			
14716	PROTECTOR PROTECTEUR PROTECTOR	0813-14-716	1		
230451	TUBE, SILICONE TUBE DE SILICONE	8527-77-739	1		

SECTION NUMBER INDEX (ENGINE)

STARTING LOCATION	SECTION No.	SECTION NAME
1–C2	1000A	SHORT ENGINE & GASKET SET
1–D2	1030A	ROTOR HOUSING
1–G2	1040A	HOUSING (FRONT & REAR)
1–C3	1100A	ECCENTRIC SHAFT & FLYWHEEL
1–F3	1110A	ROTOR
1–C4	1300A	IN. MANIFOLD
1–D4	1310A	THERMAL REACTOR
1–E4	1320A	FUEL SYSTEM
1–G4	1330A	AIR CLEANER
1–H4	1350A	STARTING ASSIST SYSTEM
1–I4	1360A	CARBURETOR
1–F6	1371A	EMISSION CONTROLS (AIR PUMP & CONTROL VALVE)
1–H6	1380A	EMISSION CONTROLS (EX. SIDE)
1–C8	1400A	OIL PUMP & FILTER
1–F8	1500A	COOLING SYSTEM
1–K8	1600A	CLUTCH (MANUAL)
1–C9	1700A	T/MISSION CASE (MANUAL)
1–G9	1710A	T/MISSION GEAR (MANUAL)
1–E10	1720A	CHANGE CONTROLS (MANUAL)
1–C11	1800A	ELECTRICAL SYSTEM (ENGINE)
1–H11	1820A	DISTRIBUTOR
1–L11	1830A	ALTERNATOR
1–D12	1840A	STARTER
1–H12	1850A	BATTERY & CABLES
1–C13	1910A	CONVERTER, OIL PUMP & PIPING (AUTOMATIC T/MISSION)
1–F13	1920A	CASE & MAIN CONTROLS (AUTOMATIC T/MISSION)
1–K13	1930A	CLUTCH & PLANETARY GEAR (AUTOMATIC T/MISSION)
1–D14	1940A	LOW, REVERSE & GOVERNOR (AUTOMATIC T/MISSION)
1–G14	1950A	MANUAL LINKAGE (AUTOMATIC T/MISSION)

THE FRAMES IN THIS COLUMN INDICATE :

1–C3	1100A	ECCENTRIC SHAFT & FLYWHEEL
1–F3	1110A	ROTOR

© 1983 Toyo Kogyo Co., Ltd.
MAY 1983

1100A ECCENTRIC SHAFT & FLY WHEEL

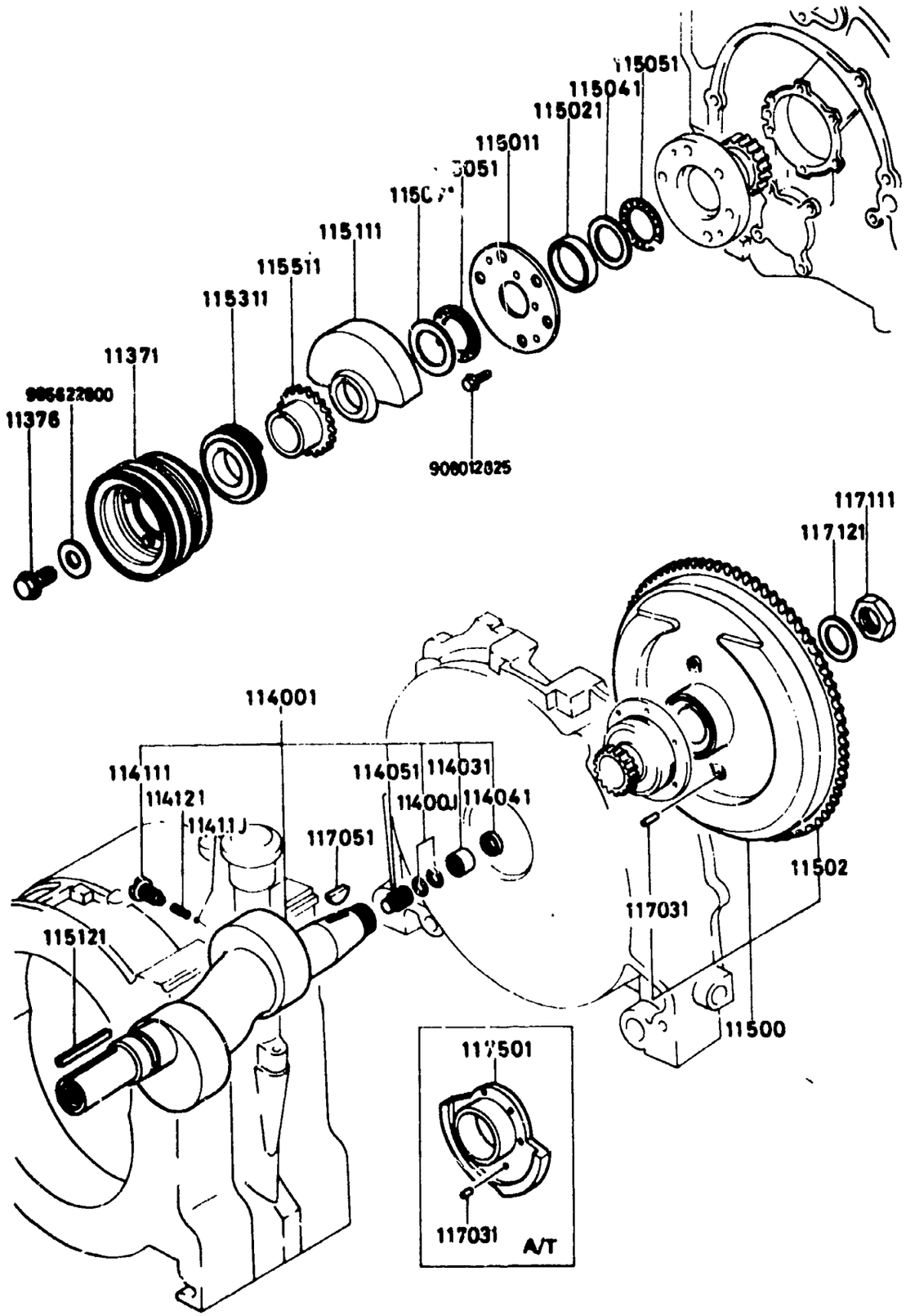

1100A-1 ECCENTRIC SHAFT & FLY WHEEL

D-CODE (Key No.)	PART NAME	PART No.	Qty.	MODEL/DESCRIPTION	VIN (Chassis No.)
11371	PULLEY POULIE POLEA	8649-11-600	1		
11376	BOLT,PULLEY BOULON,POULIE PERNO,POLEA	0820-11-611B	1		
11400J	RING,'O' JOINT 'O' SELLO DE GOMA 'O'	9954-10-1101	2		
114001	SHAFT,ECCENTRIC AXE EXCENTRIQUE EJE,EXCENTRICO	1881-11-400A	1	M/T	
		1883-11-400A	1	A/T	
114031	BEARING,NEEDLE ROULEMENT RODAMIENTO DE AGUJAS	1881-11-403	1	M/T	
114041	SEAL,OIL ARRET D'HUILE RETEN,ACEITE	1881-11-404	1	M/T	
114051	PLUG,BLIND PASTILLE TAPON CIEGO	0813-11-405	1		
11411J	BALL,STEEL BILLE D'ACIER	9961-12-000	2		
114111	PLUG,OIL JET BOUCHON, HUILE TAPA DE GRIFO DE ACEITE	0839-11-411A	2		
114121	SPRING RESSORT RESORTE	0839-11-412	2		
11500	WHEEL,FLY VOLANT MOTEUR RUEDA,VOLANTE	1881-11-700	1	M/T	
115011	PLATE PLAQUE PLATO	1011-11-501	1		
11502	GEAR,RING COURONNE, VOLANT MOTEUR ENGRANAJE, ANULADOR	0866-11-702	1	M/T	
115021	SPACER RONDELLE ESPACIADOR	0839-11-502	1	(L=8.02)	

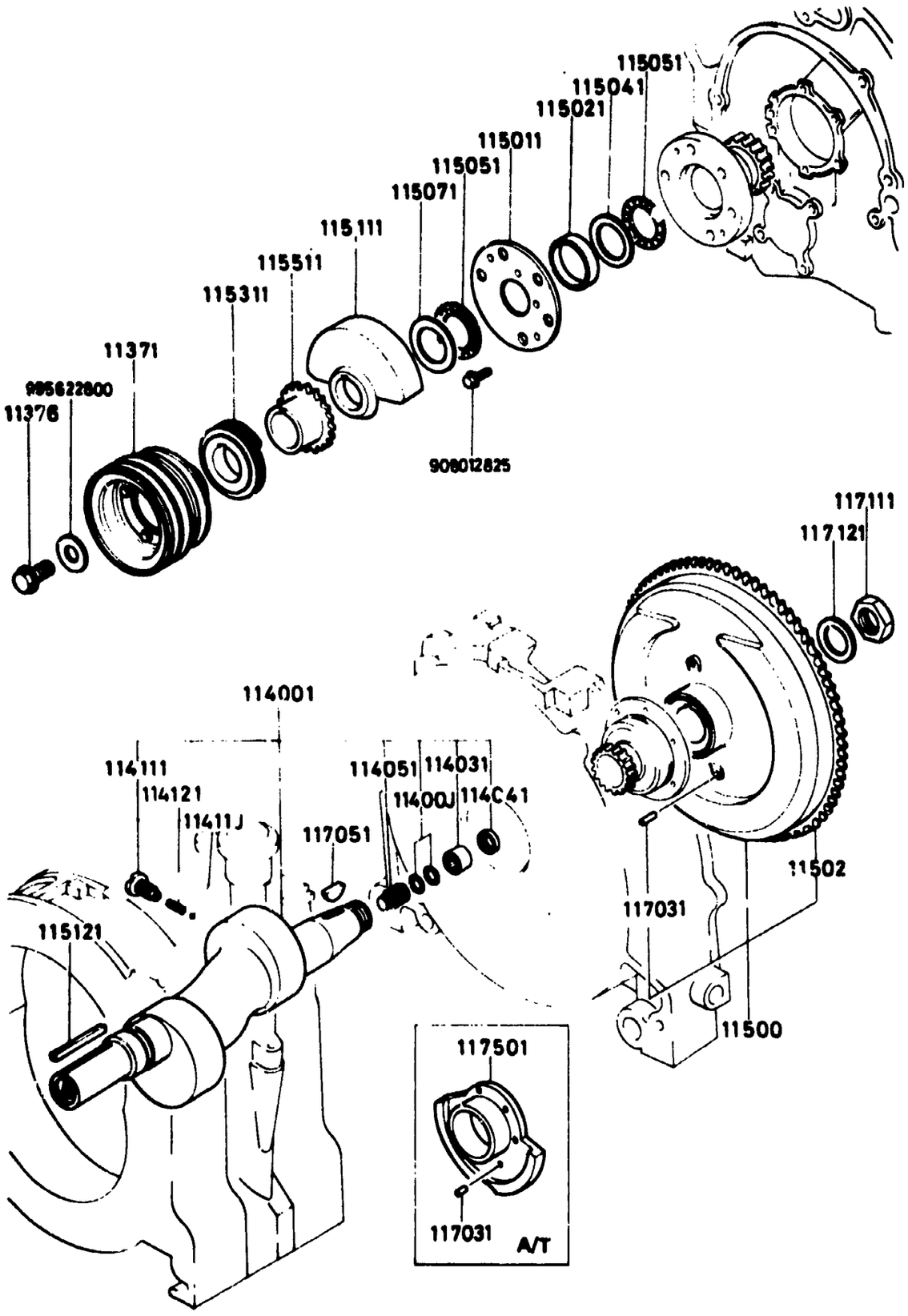

D-CODE (Key No.)	PART NAME	PART No.	Qty.	MODEL DESCRIPTION	VIN (Chassis No.)
115021 CONT'D		0839-11-506	1	(L=8.08)	
		0839-11-508	1	(L=8.04)	
		0839-11-509	1	(L=8.00)	
		8519-11-517	1	(L=8.06) 80 MODEL	SA22C .. 568501-
115041	PLATE,THRUST PLAQUETTE PLACA TRABAJO	1011-11-504	1		
115051	BEARING,NEEDLE ROULEMENT RODAMIENTO DE AGUJAS	0813-11-505B	2		
115071	WASHER,THRUST EPAISSEUR, PIGNON MARCHE ARANDELA,EMPUJE	1011-11-507	1		
115111	WEIGHT,BALANCE CONTRE-POIDS CUNA,EQUILIBRIO	1881-11-511	1		
115121	KEY CLEF LLAVE	9923-60-571	1		
115311	GEAR,DRIVE PIGNON D'ENTRAINEMENT ENGRANAJE, CONDUCTOR	0839-11-531	1		
115511	GEAR,DRIVE-OIL PUMP PIGNON, POMPE A HUILE ENGRANAJE, IMPULSOR DE AC	0839-11-551A	1		
117031	PIN CLAVETTE PASADOR	9922-20-610	1		SA22C .. 500001 -536457
117051	KEY,FLY WHEEL CALE, VOLANT MOTEUR CUNA,CORONA VOLANTE	0820-11-705	1		
117111	NUT,LOCK ECROU DE SERRAGE TUERCA,SEGURO	0810-11-711	1		
117121	WASHER,LOCK RONDELLE, BLOCAGE ARANDELA,CIERRE	0820-11-712	1		SA22C .. 500001 -536457
117501	WEIGHT,CONTROL	1883-11-750	1	A/T	SA22C ..

1100A ECCENTRIC SHAFT & FLY WHEEL

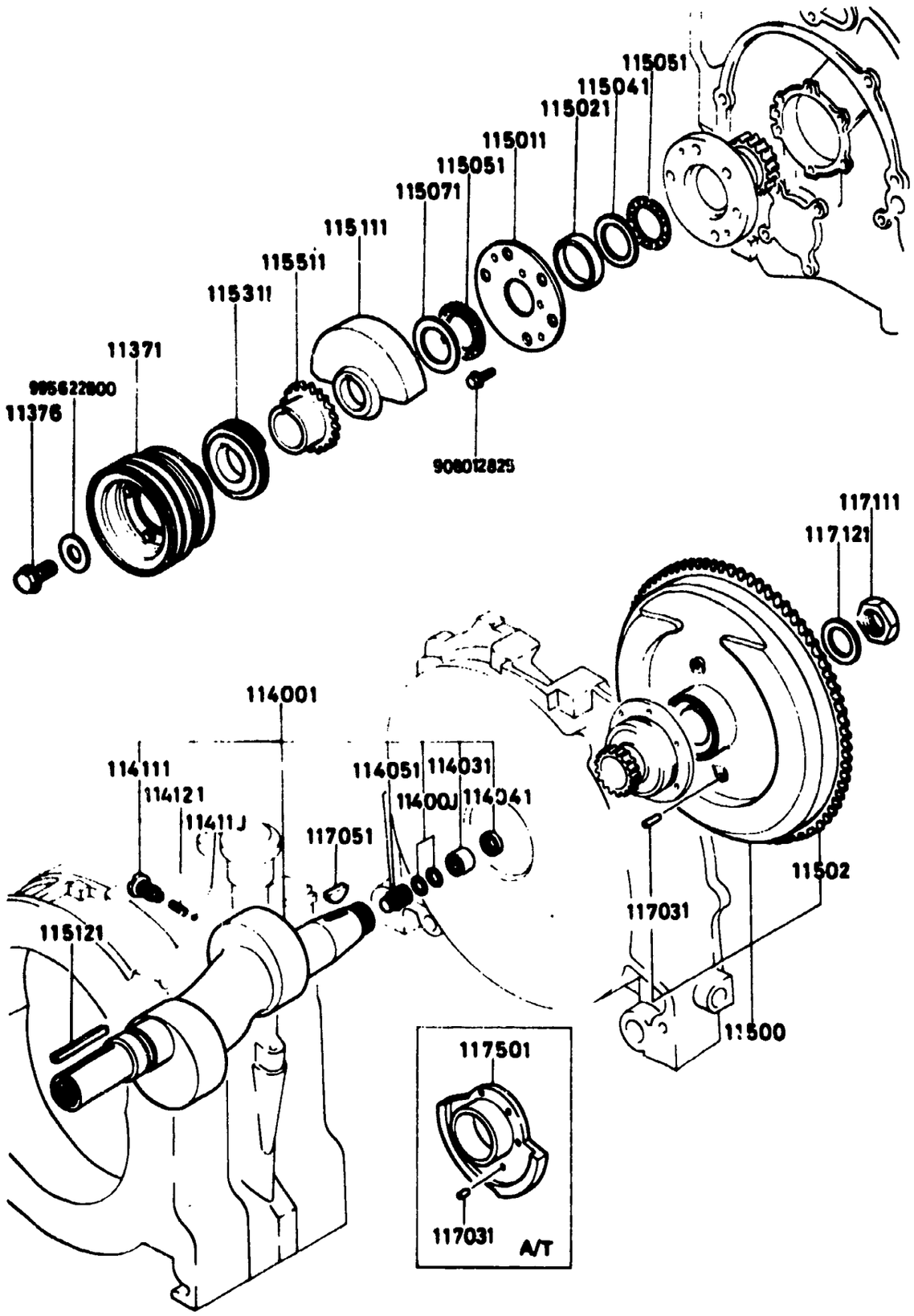

1100A-3* ECCENTRIC SHAFT & FLY WHEEL

D-CODE (Key No.)	PART NAME	PART No.	Qty.	MODEL / DESCRIPTION	VIN (Chassis No.)
117501 CONT'D	CONTROLE-POIDS CUNA, CONTROL	1883-11-750			500001 -536457
		1883-11-751A	1	A/T	SA22C ... 536458-

1110A ROTOR

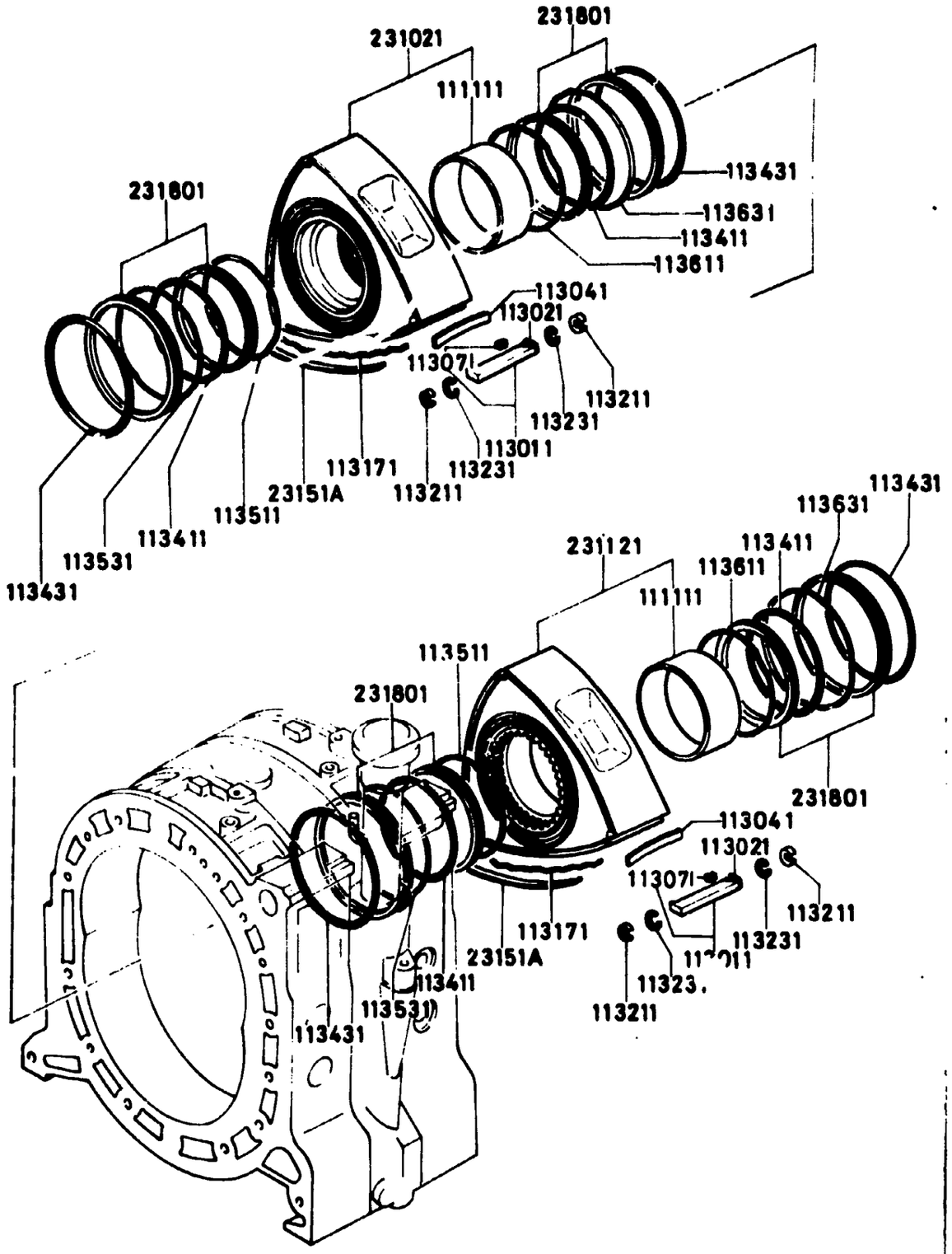

1110A-1 ROTOR

D-CODE (Key No.)	PART NAME	PART No.	Qty.	MODEL DESCRIPTION	VIN (Chassis No.)
111111	BEARING,ROTOR COUSSINET DE ROTOR RODAMIENTO ROTOR	1011-11-111	2		
113011	SEAL,APEX JOINT DE SOMMET SELLO,APICE	1056-11-300A	6	79 MODEL	SA22C .. 500001 -568500
		8562-11-300	6	80 MODEL	SA22C .. 568501-
113021	PIECE,SIDE PIECE DE COTE (MOTEUR ROT PIEZA LATERAL	1202-11-302	6		
113041	SPRING,APEX SEAL RESSORT, SEGMENT DE SOMME RESORTE,SELLO APICE	1011-11-304A	6		
113071	PIECE,ASSIST RENFORT	1056-11-307A	6		
113171	SPRING,SIDE SEAL RESSORT, SEGMENT MOTEUR R RESORTE,SELLO LATERAL	0820-11-317	12		
113211	SEAL,CORNER JOINT SELLO,ESQUINA	1202-11-321	12		
113231	SPRING,CORNER SEAL RESSORT DE SEGMENT RESORTE,SELLO DE ESQUINA	1202-11-323	12		
113411	RING,'O'-INNER JOINT 'O',INTERIEUR SELLO DE GOMA 'O',INTERNO	0820-11-341	4		
113431	RING,'O'-OUTER JOINT 'O',EXTERIEUR SELLO DE GOMA 'O',EXTERNO	1202-11-343	4	79 MODEL	SA22C .. 500001 -568500
		8341-11-343	4	80 MODEL	SA22C .. 568501-
113511	SPRING,FRT.-INNER RESSORT AVANT, INTERIEUR RESORTE,DELANTERO INTERIO	1011-11-351	2		
113531	SPRING,FRT.-OUTER RESSORT AVANT, EXTERIEUR RESORTE,DELANTERO EXTERIO	1011-11-353A	2		
113611	SPRING,REAR-INNER RESSORT ARRIERE, INTERIEU RESORTE,TRASERO-INTERIOR	1011-11-361	2		

1110A ROTOR

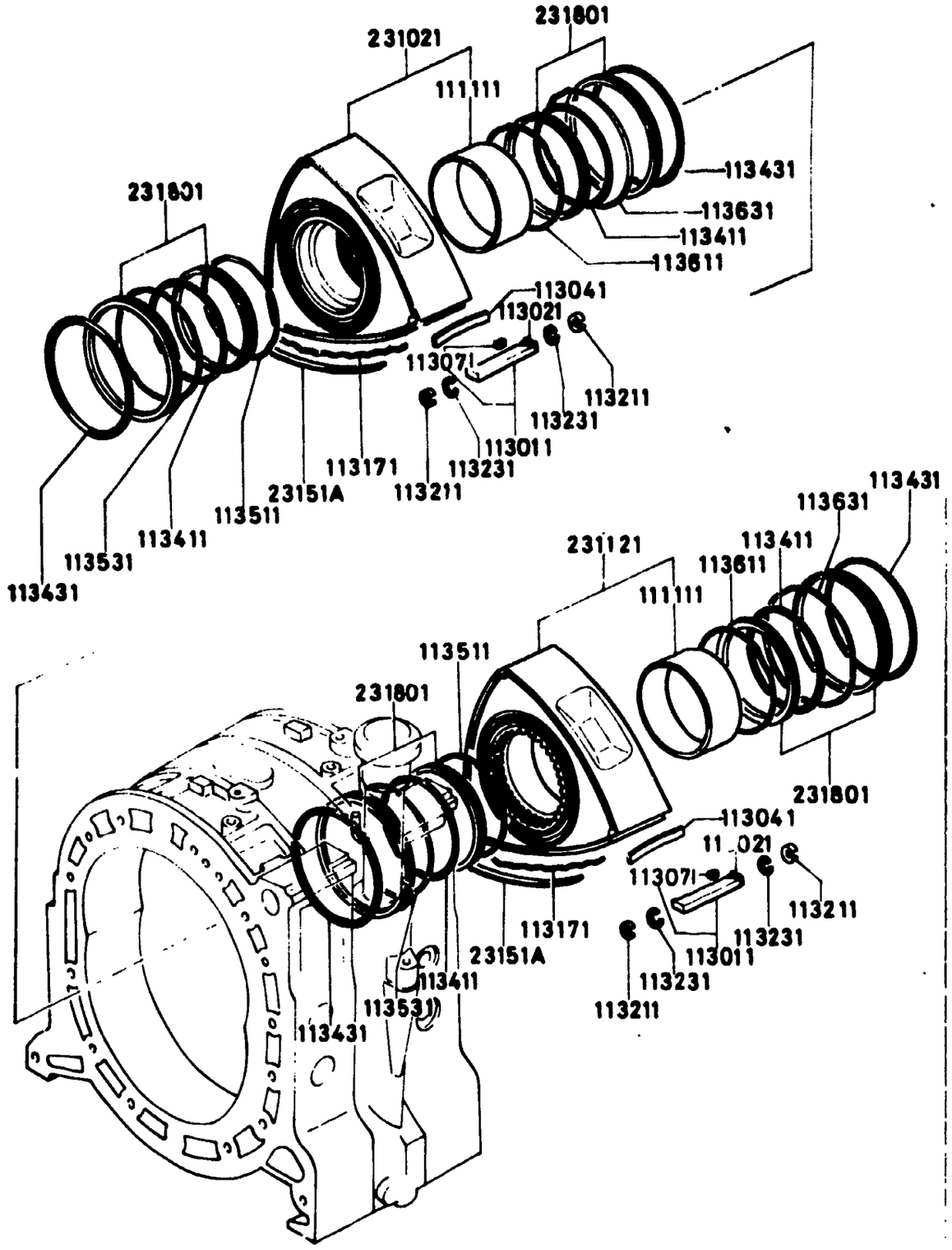

1110A-2* ROTOR

D-CODE (Key No.)	PART NAME	PART No.	Qty.	MODEL / DESCRIPTION	VIN (Chassis No.)
113631	SPRING,REAR-OUTER RESSORT ARRIERE, EXTERIEU RESORTE,TRASERO-EXTERIOR	1011-11-363A	2		
231021	ROTOR,FRONT ROTOR AV.	3743-23-103	1	(C)	
231121	ROTOR,REAR ROTOR ARR.	3743-23-113	1	(C)	
23151A	SEAL,SIDE SEGMENT SELLO,LATERAL	1011-23-151A	12		
231801	SEAL SET,OIL JEU SEGMENT D'HUILE JUEGO RETENES,ACEITE	8871-23-180	4		

SECTION NUMBER INDEX (ENGINE)

STARTING LOCATION	SECTION No	SECTION NAME
1–C2	1000A	SHORT ENGINE & GASKET SET
1–D2	1030A	ROTOR HOUSING
1–G2	1040A	HOUSING (FRONT & REAR)
1–C3	1100A	ECCENTRIC SHAFT & FLYWHEEL
1–F3	1110A	ROTOR
1–C4	1300A	IN. MANIFOLD
1–D4	1310A	THERMAL REACTOR
1–E4	1320A	FUEL SYSTEM
1–G4	1330A	AIR CLEANER
1–H4	1350A	STARTING ASSIST SYSTEM
1–I4	1360A	CARBURETOR
1–F6	1371A	EMISSION CONTROLS (AIR PUMP & CONTROL VALVE)
1–H6	1380A	EMISSION CONTROLS (EX. SIDE)
1–C8	1400A	OIL PUMP & FILTER
1–F8	1500A	COOLING SYSTEM
1–K8	1600A	CLUTCH (MANUAL)
1–C9	1700A	T/MISSION CASE (MANUAL)
1–G9	1710A	T/MISSION GEAR (MANUAL)
1–E10	1720A	CHANGE CONTROLS (MANUAL)
1–C11	1800A	ELECTRICAL SYSTEM (ENGINE)
1–H11	1820A	DISTRIBUTOR

STARTING LOCATION	SECTION No.	SECTION NAME
1–L11	1830A	ALTERNATOR
1–D12	1840A	STARTER
1–H12	1850A	BATTERY & CABLES
1–C13	1910A	CONVERTER, OIL PUMP & PIPING (AUTOMATIC T/MISSION)
1–F13	1920A	CASE & MAIN CONTROLS (AUTOMATIC T/MISSION)
1–K13	1930A	CLUTCH & PLANETARY GEAR (AUTOMATIC T/MISSION)
1–D14	1940A	LOW, REVERSE & GOVERNOR (AUTOMATIC T/MISSION)
1–G14	1950A	MANUAL LINKAGE (AUTOMATIC T/MISSION)

THE FRAMES IN THIS COLUMN INDICATE :

1–C4	1300A	IN. MANIFOLD
1–D4	1310A	THERMAL REACTOR
1–E4	1320A	FUEL SYSTEM
1–G4	1330A	AIR CLEANER
1–H4	1350A	STARTING ASSIST SYSTEM
1–I4	1360A	CARBURETOR (1979 MODEL)

© 1983 Toyo Kogyo Co., Ltd.
MAY 1983

1300A IN. MANIFOLD

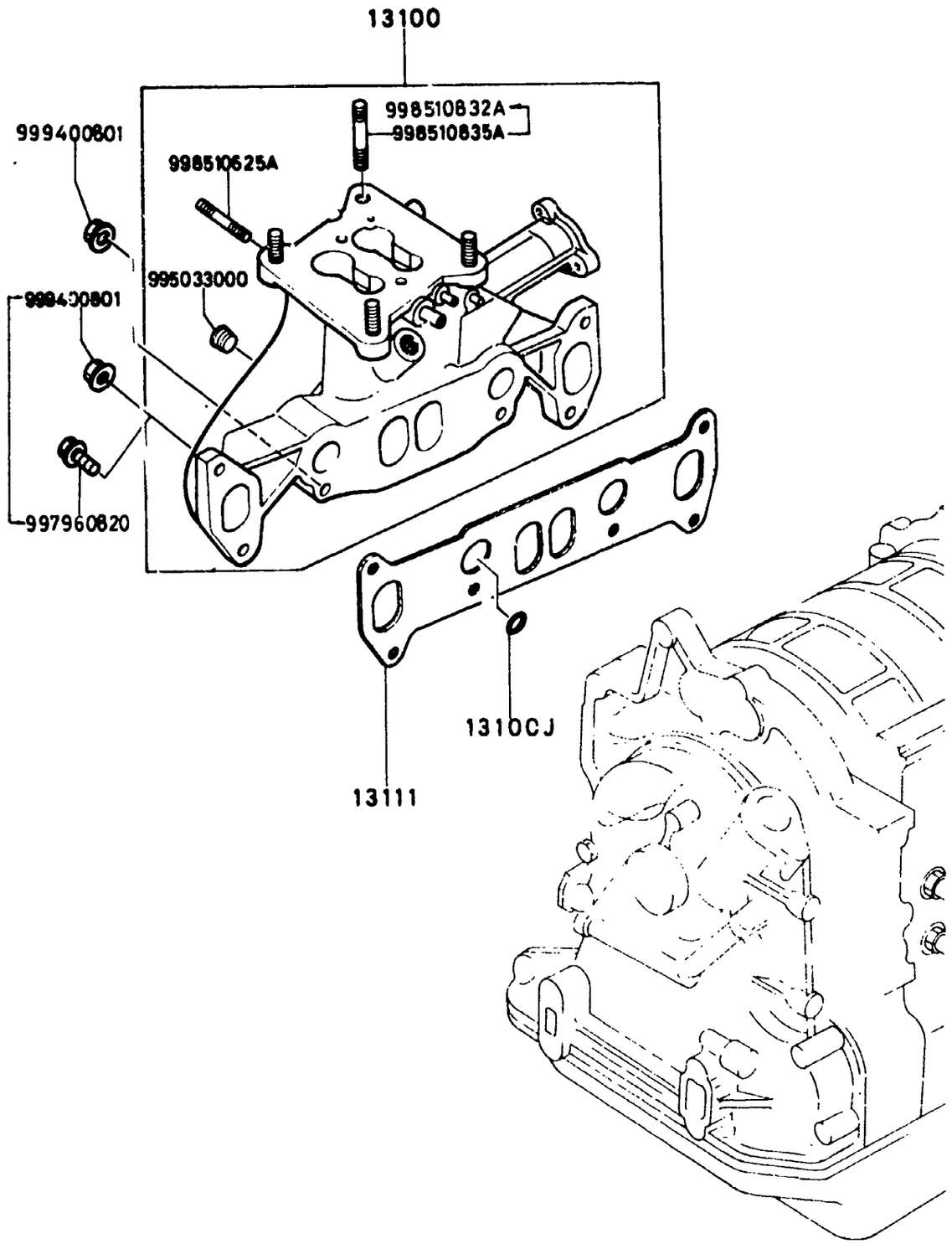

1300A-1* IN. MANIFOLD

D-CODE (Key No.)	PART NAME	PART No.	Qty.	MODEL / DESCRIPTION	VIN (Chassis No.)
13100	MANIFOLD, INLET COLLECTEUR, ADMISSION MULTIPLE DE ADMISION	8871-13-100A	1		SA22C .. 500001 -552421
	<A >	8871-13-100B	1		SA22C .. 552422-
13100J	RING, 'O' JOINT 'O'	8527-13-113	2		
13111	GASKET, IN. MANIFOLD JOINT, COLLECTEUR AD. EMPAQUE, MULTIPLE ADMISIO	3743-13-111A	1		

1310A THERMAL REACTOR

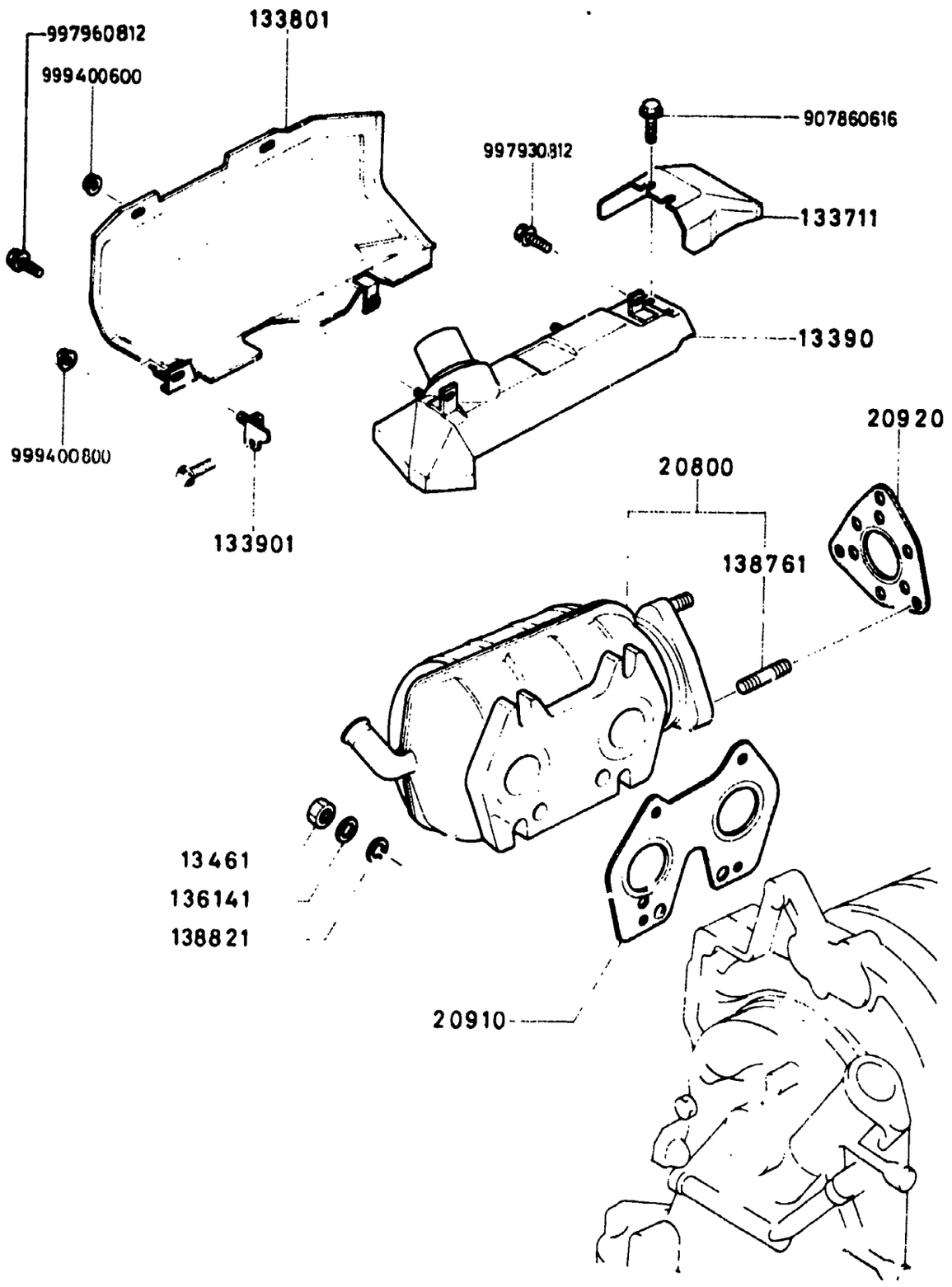

1310A-1* THERMAL REACTOR

D-CODE (Key No.)	PART NAME	PART No.	Qty.	MODEL DESCRIPTION	VIN (Chassis No.)
133711	INSULATOR,HEAT ISOLATEUR AISLADOR, CALEFACCION	8871-13-371	1		
133801	PLATE,ABSORBER PLAQUE AMORTISSEUR	8871-13-380A	1		
13390	DUCT,HOT AIR CONDUIT, AIR CHAUD CONDUCTO PARA AIRE CALIEN	8871-13-330B	1		
133901	BRACKET,ABSORBER ATTACHE,AMORTISSEUR SOPORTE,AMORTIGUADOR	3565-13-390	1		
13461	NUT ECROU TUERCA	2158-40-355	4		
136141	WASHER,PLAIN RONDELLE ARANDELA,SIMPLE	0839-13-614	4		
138.	STUD,THERMAL REACTOR GOUJON, REACTEUR THERM. PRISIONERO,REACTOR TERMAL	1757-13-857	3		SA22C .. 508587-
		2329-13-876	3		SA22C .. 500001 -508586
138821	WASHER,SPRING RONDELLE GROWER ARANDELA,MUELLE	2329-13-882	4		
20800	REACTOR,THERMAL REACTEUR REACTOR	8344-13-800	1	80 MODEL CALIF.	SA22C .. 568501-
		8871-13-800B	1	79 MODEL 80 MODEL FED. 80 MODEL CANADA	
20910	GASKET,REACTOR JOINT, REACTEUR EMPAQUE, REACTOR	3743-13-889A	1	79 MODEL 80 MODEL FED. 80 MODEL CANADA	
		8562-13-889A	1	80 MODEL CALIF.	SA22C .. 568501-
20920	GASKET,EXHAUST PIPE JOINT, ECHAPPEMENT EMPAQUE, TUBO ESCAPE	8871-13-891	1		

1320A FUEL SYSTEM

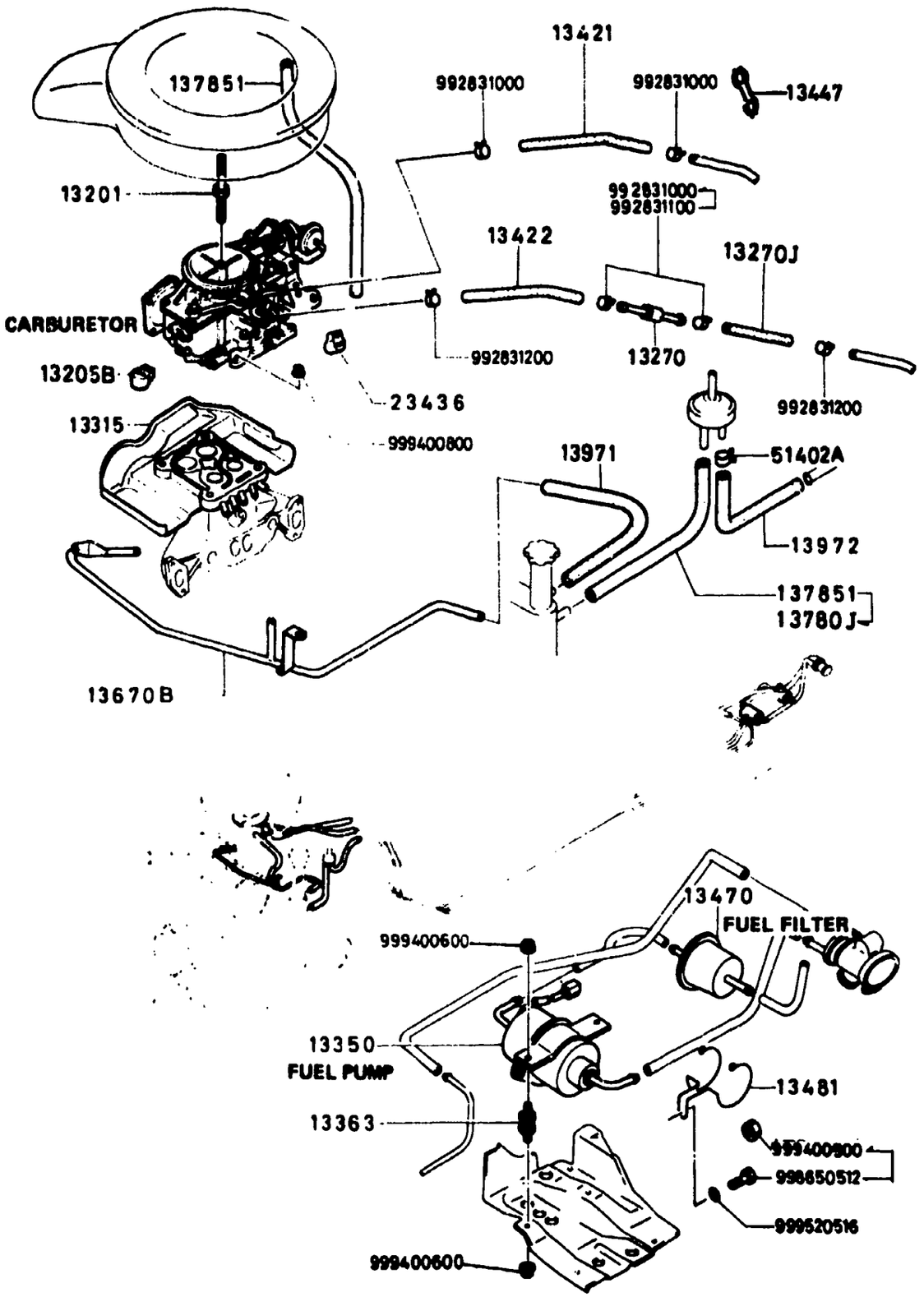

1320A-1 FUEL SYSTEM

D-CODE (Key No.)	PART NAME	PART No.	Qty.	MODEL DESCRIPTION	VIN (Chassis No.)
13201	BOLT,AIR CLEANER BOULON,FILTRE A AIR PERNO,PURIFICADOR DE AIRE	8871-13-201A	1		
13205B	CAP,IDLE SWITCH	8527-13-205	1	80 MODEL M/T	
13270	VALVE,CHECK SOUPAPE DE RETENUE	3648-13-270	1	79 MODEL	SA22C .. 500001 -568500
		3648-13-270A	1	80 MODEL	SA22C .. 568501-
13270J	HOSE,FUEL FLEXIBLE ESSENCE	9934-80-6080	1	(ORD.BY 9934906750) 79 MODEL	SA22C .. 500001 -568500
		9935-80-6070	1	(ORD.BY 9935806999) 80 MODEL	SA22C .. 568501-
13315	INSULATOR ISOLATEUR AISLADOR SOPORTE	8871-13-220B	1	M/T	
		8872-13-220A	1	A/T	
13350	PUMP,FUEL POMPE A ESSENCE BOMBA DE COMBUSTIBLE	8871-13-400B	1		
13363	RUBBER,INSULATION CAOUTCHOUC ISOLANT GOMA,AISLADORA	8871-13-407	2		
13421	HOSE,FUEL MAIN TUYAU D'ARRIVEE D'ESSENCE MANGUERA TANQUE PRINC.	9934-80-8280	1	(ORD.BY 9934908750) 79 MODEL	SA22C .. 500001 -568500
		9935-80-8280	1	(ORD.BY 9935808999) 80 MODEL	SA22C .. 568501-
13422	HOSE,FUEL RETURN FLEXIBLE RETOUR ESSENCE MANGUERA, RETORNO COMBUST	9934-80-6250	1	(ORD.BY 9934906750) 79 MODEL	SA22C .. 500001 -568500
		9935-80-6280	1	(ORD.BY 9935806999) 80 MODEL	SA22C .. 568501-
13447	CLIP ATTACHE	1570-13-447	1		SA22C .. 502687-

1320A FUEL SYSTEM

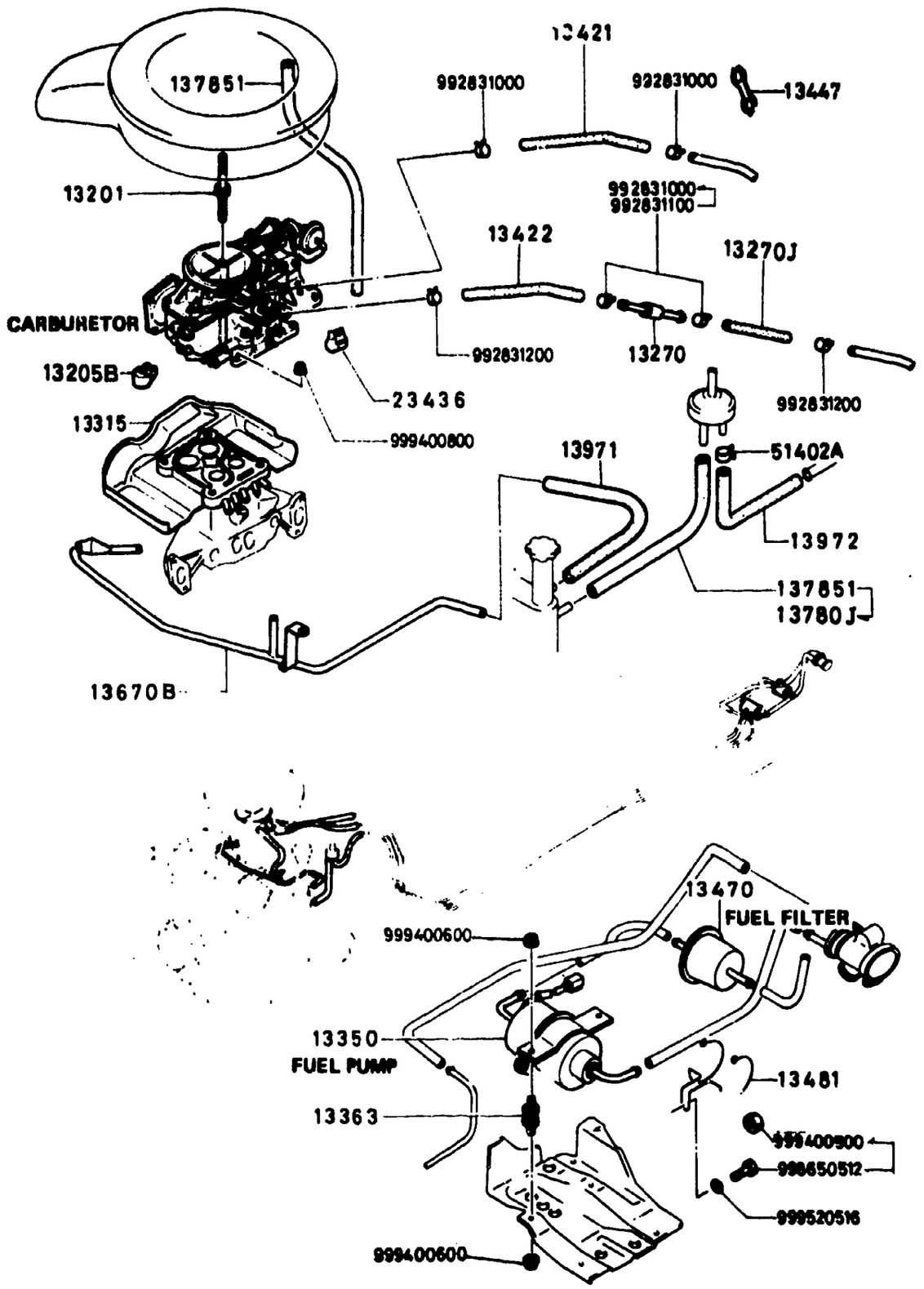

1320A-2* FUEL SYSTEM

D-CODE (Key No.)	PART NAME	PART No.	Qty.	MODEL DESCRIPTION	VIN (Chassis No.)
13447 CONT'D	PRENSA TRABA GAZA	1570-13-447			
		8871-13-447	1		SA22C .. 500001 -502686
13470	FILTER, FUEL FILTRE A ESSENCE FILTRO DEL COMBUSTIBLE	0222-13-470B	1		
13481	CLAMP, FUEL FILTER FIXATION, FILTRE A ESSENC PRENSA PARA FIL. DEL COMBU	0381-13-481	1		
13670B	PIPE, EVAPORATION TUYAU EVAPORATION	8871-13-670B	1		SA22C .. 500001 -566641
13780J	HOSE, EVAPORATION TUYAU D'EVAPORATION MANGUERA, EVAPORACION	9935-10-8190		(ORD. BY 9935108999)	
			1	80 MODEL	SA22C .. 568501-
137851	HOSE, VENTILATION CONDUIT D'AERATION MANGUERA, VENTILACION	8871-13-785C	1	80 MODEL	SA22C .. 568501-
			2	79 MODEL	SA22C .. 500001 -563500
13971	HOSE, VENTILATION CONDUIT D'AERATION MANGUERA, VENTILACION	9935-10-8080		(ORD. BY 9935108999)	
			1	80 MODEL	SA22C .. 568501-
13972	HOSE, EVAPORATION DURITE D'EVAPORATION MANGUERA, EVAPORACION	8871-13-793A	1		
23436	CAP, IDLE LIMITER BOUCHON TAPA CONTROL DEL MINIMO	8527-13-205	1	79 MODEL 80 MODEL FED. 80 MODEL CANADA	
51402A	CLIP ATTACHE PRENSA TRABA GAZA	3972-51-402	1		

1330A AIR CLEANER

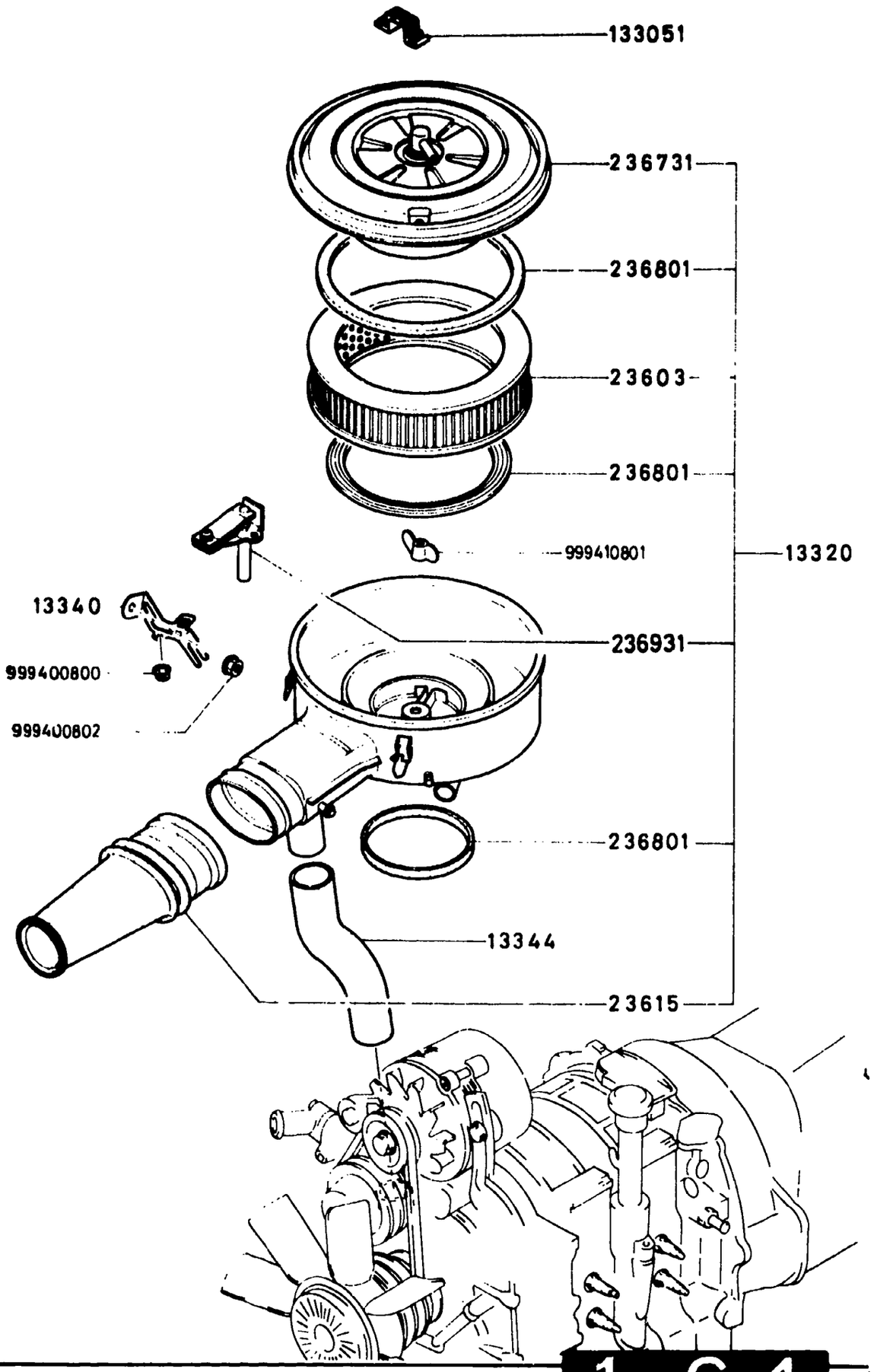

1330A-1* AIR CLEANER

D-CODE (Key No.)	PART NAME	PART No.	Qty.	MODEL DESCRIPTION	VIN (Chassis No.)
133051	CLIP,PIPE ATTACHE, CONDUIT PRENSA PARA CANERIA	8871-13-305	1		
13320	CLEANER,AIR FILTRE A AIR DEPURADOR PARA AIRE	8341-13-300	1	80 MODEL	SA22C .. 568501-
		8871-13-300C	1	79 MODEL	SA22C .. 500001 -568500
13340	SUPPORT,AIR CLEANER SUPPORT, FILTRE A AIR SOPORTE,PURIFICADOR DE AI	8871-13-311B	1		
13344	HOSE,HOT AIR DURITE D'AIR CHAUD MANGUERA, AIRE CALIENTE	8871-13-341A	1		
23603	ELEMENT,AIR CLEANER ELEMENT FILTRE A AIR	1757-23-672	1	79 MODEL	SA22C .. 500001 -568500
		8341-23-672	1	80 MODEL	SA22C .. 568501-
23615	PIPE,AIR INTAKE CONDUIT, ASPIRATION D'AIR TUBO TOMA DE AIRE	1757-13-351A	1		
236731	COVER CACHE COBERTOR	8871-23-673	1		
236801	GASKET SET POCHETTE, JOINTS JUEGO DE EMPAQUE	1757-23-680	1		
236931	COMPENSATOR COMPENSATEUR	3648-23-693A	1		

1350A STARTING ASSIST SYSTEM

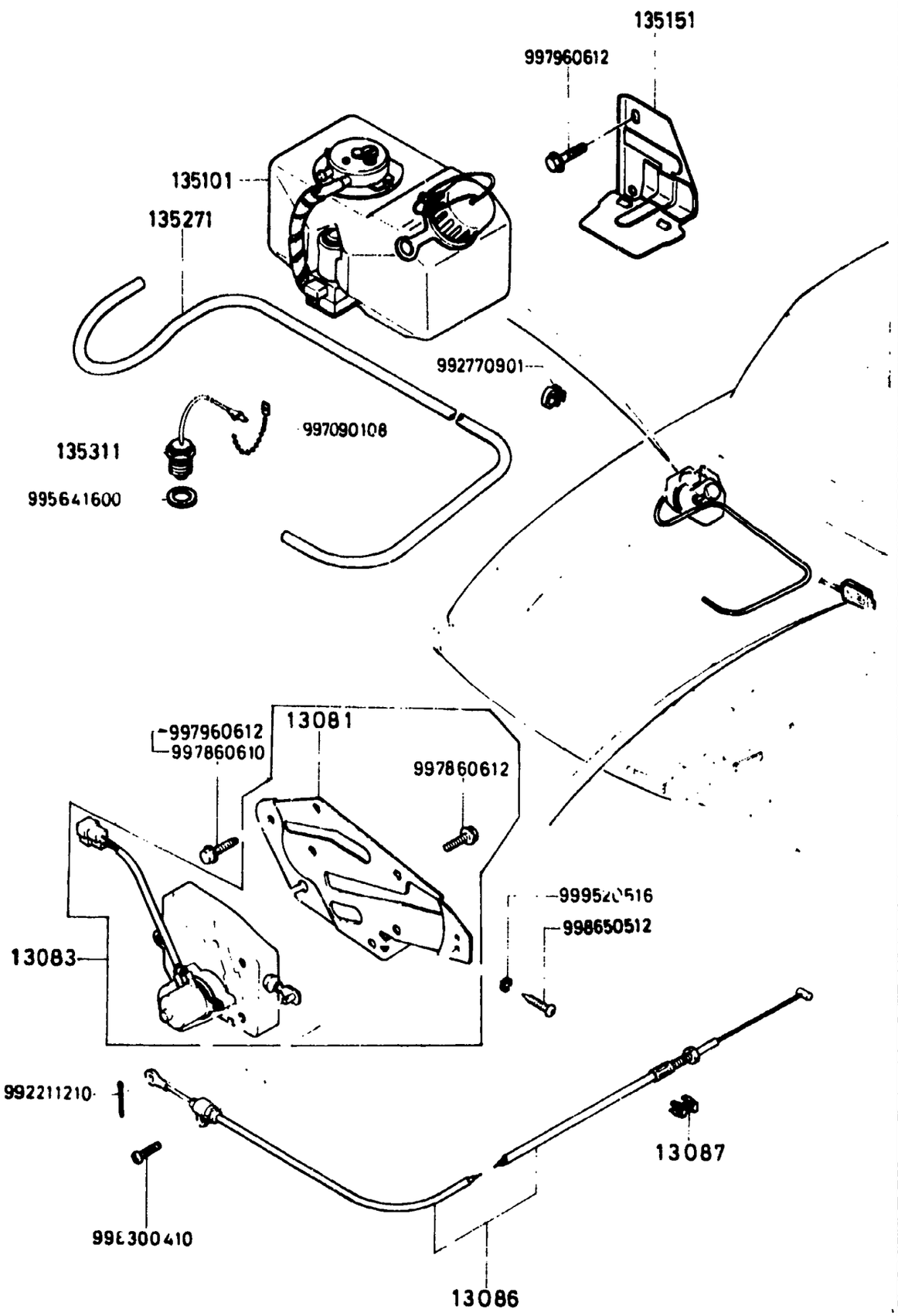

1350A-1* STARTING ASSIST SYSTEM

D-CODE (Key No.)	PART NAME	PART No.	Qty.	MODEL DESCRIPTION	VIN (Chassis No.)
13081	BRACKET ATTACHE SOPORTE	8871-13-081B	1		
13083	MOTOR MOTEUR	8341-13-085	1	80 MODEL	SA22C .. 568501-
		8871-13-085B	1	79 MODEL	SA22C .. 500001 -568500
13086	WIRE CABLE	8871-13-086B	1		
13087	SPRING RESSORT RESORTE	8871-13-087A	2		
135101	TANK,STARTING FLUID RESERVOIR DEPOSITO,LIQUIDO ARRANCAD	1881-13-510B	1		
135151	BRACKET,TANK ATTACHE, RESERVOIR SOPORTE,TANQUE	1757-13-515A	1		
135271	HOSE DURITE MANGUERA	8871-13-527	1		
135311	THERMO UNIT JAUGE DE TEMPERATURE UNIDAD,TERMOSTATO	8712-13-531	1		

1360A CARBURETOR (1979 MODEL)

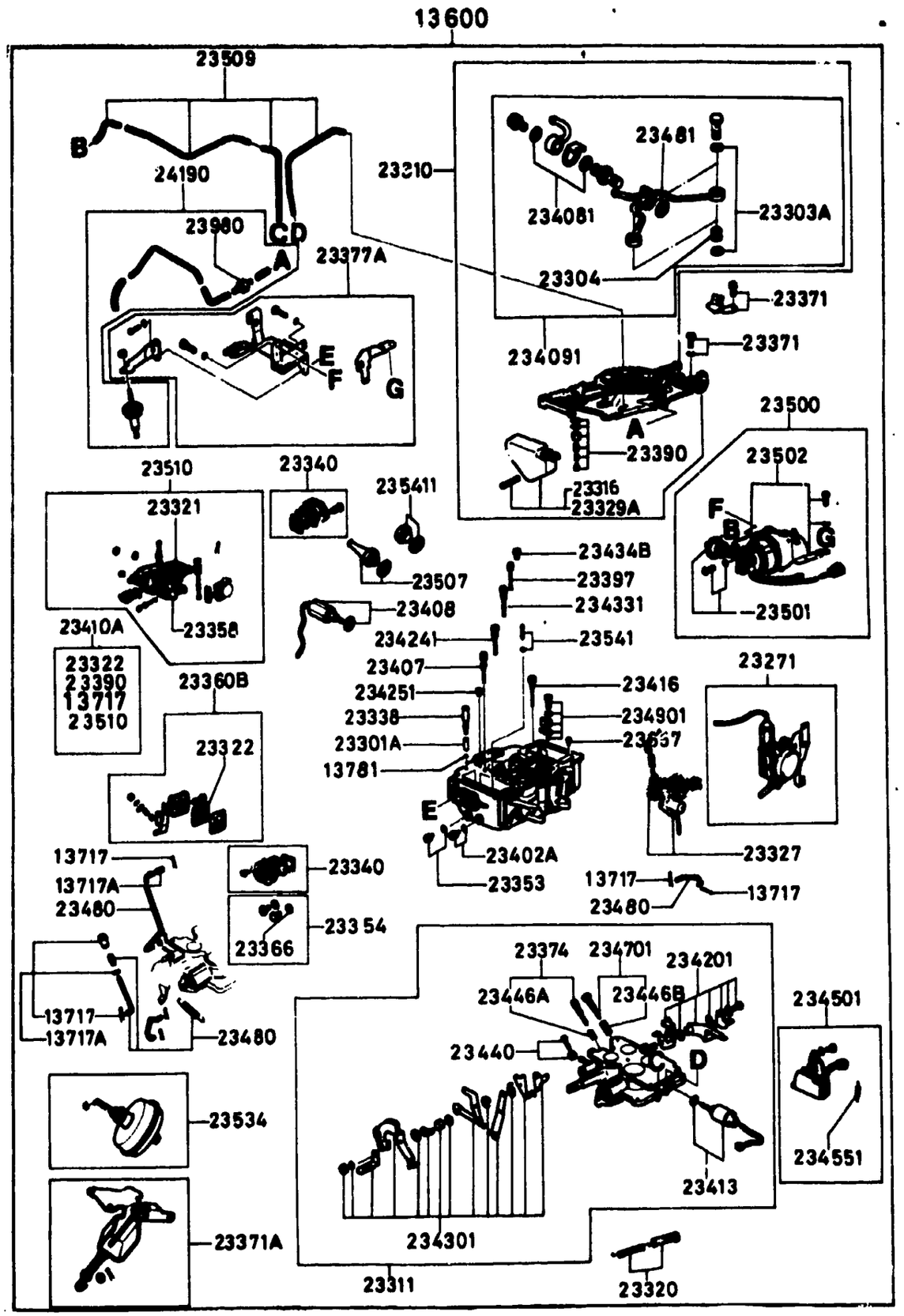

1360A-1 CARBURETOR (1979 MODEL)

D-CODE (Key No.)	PART NAME	PART No.	Qty.	MODEL/DESCRIPTION	VIN (Chassis No.)
13600	CARBURETOR CARBURATEUR CARBURADOR	8868-13-200F	1	CALIF. M/T	SA22C .. 500001 -502556
	<A>	8868-13-200G	1	CALIF. M/T	SA22C .. 502557-
		8869-13-200G	1	CALIF. A/T	
		8871-13-200F	1	FED. M/T CAMADA M/T	SA22C .. 500001 -502716
	<A>	8871-13-200G	1	FED. M/T CANADA M/T	SA22C .. 502717-
		8872-13-200G	1	FED. A/T CANADA A/T	
13717	PIN,COTTER GOUPILLE CHAVETA	1663-23-392	7		
13717A	PIN & WASHER SET JEU AXES & RONDELLES	8871-23-530	1		
13781	BALL,STEEL BILLF D'ACIER BOLA,ACERO	0107-13-781	1		
23271	CHAMBER SET,DIAPH. CHAMBRE DIAPH. JUEGO DE CAMARA,DIAFRAGMA	8871-23-350	1		
23301A	WEIGHT,PUMP POIDS POMPE CARB.	3743-23-488	1		
23303A	GASKET JOINT EMPAQUE	0730-23-318	4		
23304	STRAINER TAMIS	8871-23-401	2		
23310	HORN,AIR COUVERCLE MONTE PITOS AIRES	8868-23-310	1	CALIF. M/T	
		8869-23-310	1	CALIF. A/T	
		8871-23-310	1	FED. M/T CANADA M/T	
		8872-23-310	1	FED. A/T CANADA A/T	
23311	CHAMBER,THROTTLE CHAMBRE	8868-23-330	1	CALIF. M/T	

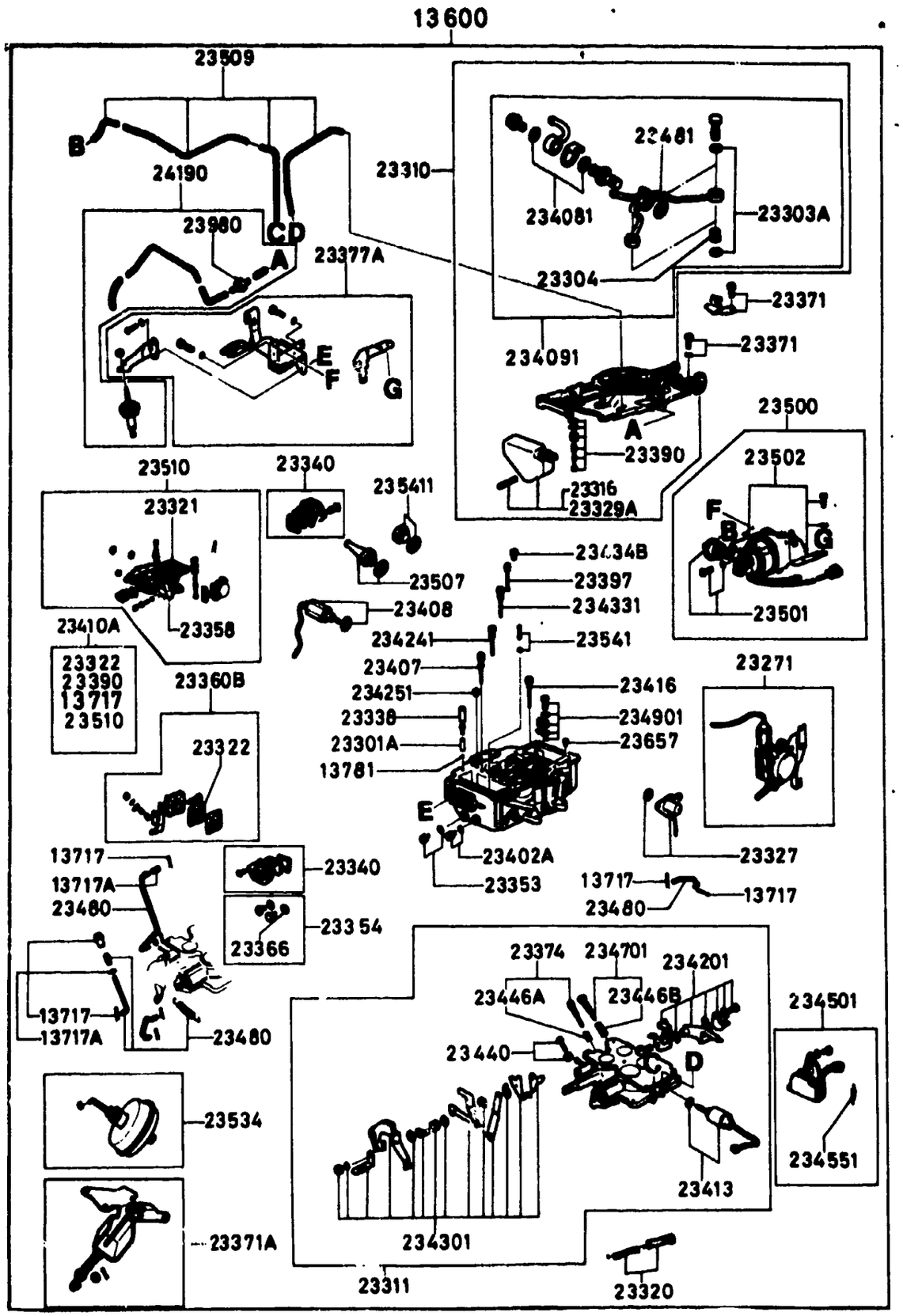

1360A-2 CARBURETOR (1979 MODEL)

D-CODE (Key No.)	PART NAME	PART No.	Qty.	MODEL/DESCRIPTION	VIN (Chassis No.)
23311 CONT' D		8869-23-330	1	CALIF. A/T	
		8871-23-330	1	FED. M/T CANADA M/T	
		8872-23-330	1	FED. A/T CANADA A/T	
23316	FLOAT,FRONT FLOTTEUR,AVANT FLOTADOR,FRENTE	8871-23-328	1		
23320	SPRING SET,RETURN JEU, RESSORT DE RAPPEL JUEGO DE RESORTES,RETORNO	8871-23-380	1		
23321	GASKET,FLOAT CHAMBER JOINT CHAMBRE FLOTTEUR	8871-23-327	1		
23322	DIAPHRAGM,CARBURETOR DIAPHRAGME DE CARBURATEUR	1663-23-361A	1		
23327	SOLENOID SOLENOIDE	8871-23-411	1	FED. CANADA CALIF. A/T	
23329A	FLOAT, REAR FLOTTEUR,ARRIERE FLOTADOR,TRASERA	8871-23-329	1		
23338	PLUG,CHECK BALL PASTILLE	8826-23-338	1		
23340	COVER SET,LEV.GAUGE COUVERCLE	1663-23-340A	2		
23353	JET SET,MAIN 1ST. JEU DE GICLEUR, PRINCIPAL JGO.DE INYR.PRL.-PRMR.	1881-23-421	2	CALIF. A/T	
		8871-23-421	2	FED. CANADA CALIF. M/T	
23354	PLUG SET JEU DE BOUCHONS JUEGO DE TAPONES	1668-23-354	4		
23358	GASKET,FLANGE JOINT DE FLANGE	8649-23-349	1		
23360B	PUMP SET,ACCEL. JEU POMPE ACCEL.	8826-23-360	1		
23366	WASHER	0305-23-356	4		

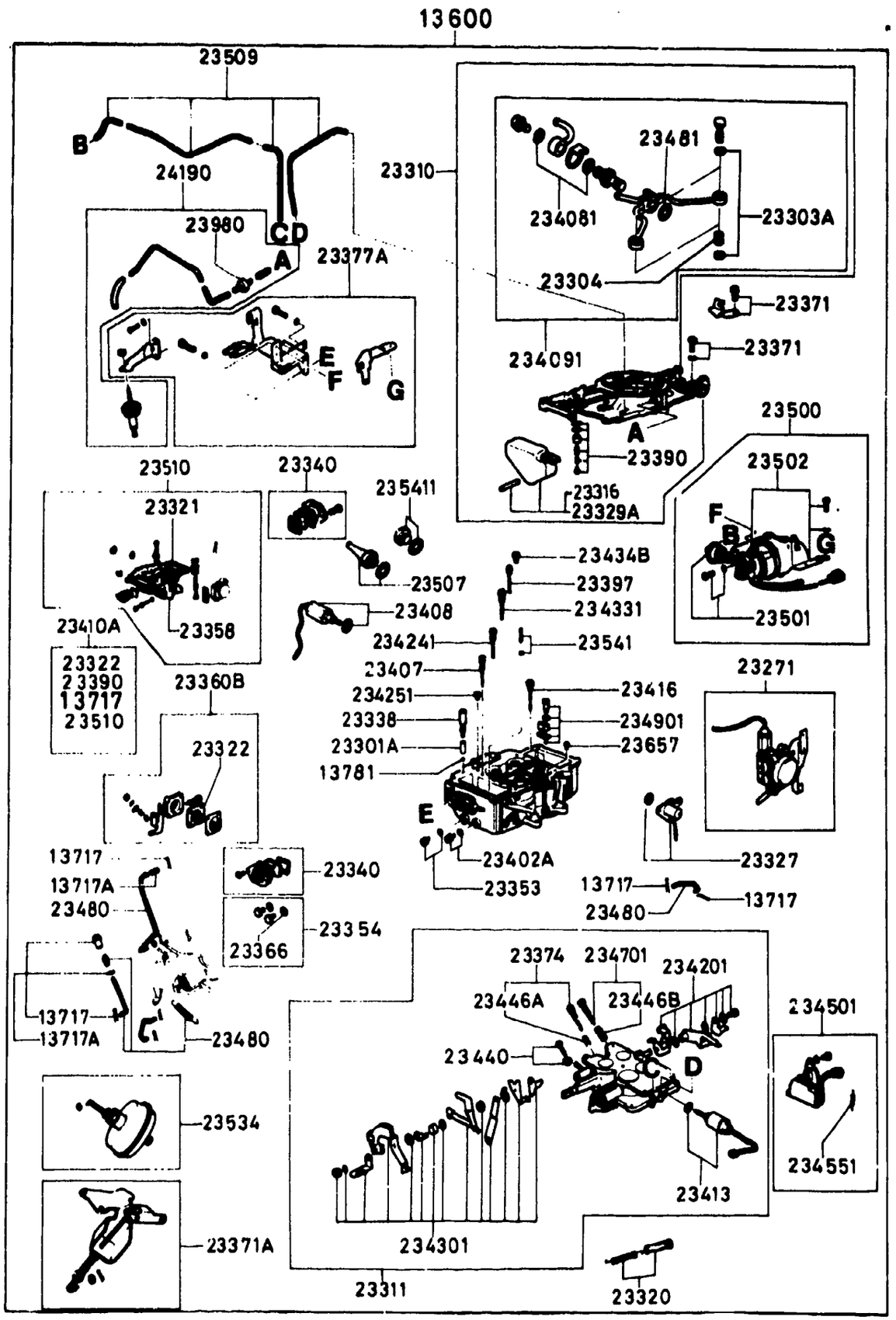

D-CODE (Key No.)	PART NAME	PART No.	Qty.	MODEL DESCRIPTION	VIN (Chassis No.)
23366 CONT'D	RONDELLE ARANDELA	0305-23-356			
23371	SCREW SET JEU DE VIS TORNILLO,JGO.	8871-23-652	1		
23371A	HOLDER SET,RETURN	8868-23-371	1	CALIF.	
		8871-23-371	1	FED. CANADA	
23374	SCREW SET,IDLE ADJ. JEU DE VIS, RALENTI TORNILLO,JGO.,AJUSTE VACI	8649-23-460	1	FED. M/T CANADA M/T	
		8871-23-460	1	CALIF. FED. A/T CANADA A/T	
23377A	BRACKET SET JEU DE SUPPORTS	8871-23-370	1	M/T	
		8872-23-370	1	A/T	
23390	VALVE SET,FLOAT JEU POINTEAUX JUEGO VALVULA,FLOTADOR	8826 [illegible]90	1 2	CALIF. A/T FED. CANADA CALIF. M/T	
23397	JET,STEP GICLEUR INYECTOR DE AVANCE	8555-23-426	2		
23402A	JET SET,MAIN 2ND. JEU DE GICLEUR, PRINCIPAL JGO.DE INYR.PRL.-SEG.	0222-23-355B	2		
23407	JET SET,SLOW JEU DE GICLEUR, RALENTI JUEGO DE INYECTURES DE BA	3743-23-42[illegible]	2		
23408	VALVE,SOLENOID SOUPAPE DE SOLENOID VALVULA,SOLENOIDO	8871-23-321	1	M/T	
234081	WASHER RONDELLE ARANDELA	0823-23-402A	1		
234091	CONNECTOR SET,FUEL RACCORD D'ESSENCE ASSEMBL JUEGO DEL CONECTOR DEL CA	8871-23-409A	1		
23410A	REPAIR KIT JEU DE PIECES COMPOSANTES JGO.DE REPARACION	8871-23-540	1		

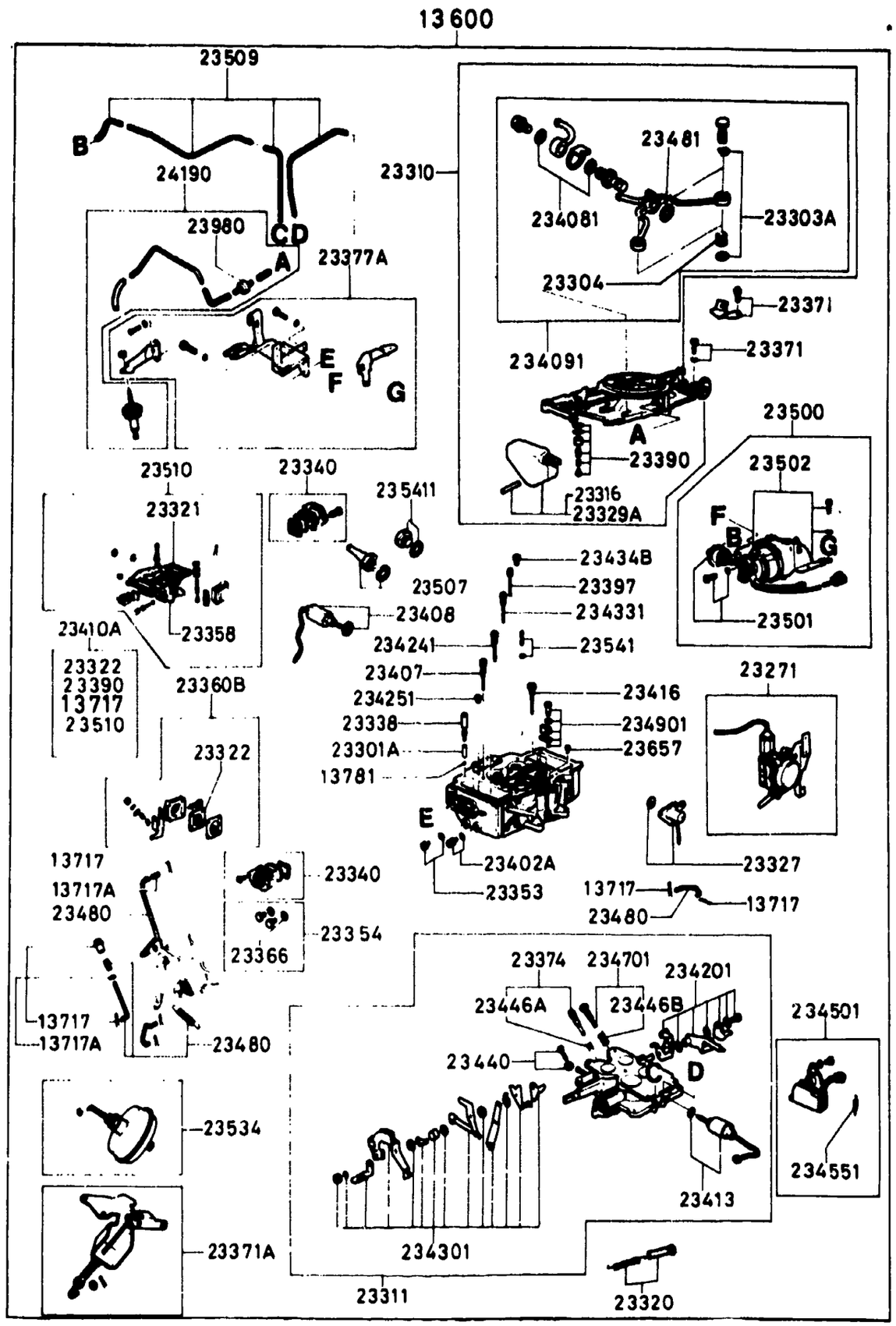

1360A-4 CARBURETOR (1979 MODEL)

D-CODE (Key No.)	PART NAME	PART No.	Qty.	MODEL DESCRIPTION	VIN (Chassis No.)
23413	VALVE,SOLENOID	8872-23-413	1	CALIF. A/T	
23416	JET,COASTING GICLEUR	8871-23-491	1	M/T	
234201	LEVER SET,FRONT LEVIER ASSEMBLE, AVANT JUEGO DE PALANCAS,DELANTE	8871-23-420	1	M/T	
		8872-23-420	1	A/T	
234241	JET,AIR BLEED NO.1 PURGEUR AIR NO 1 INYR.,PURGADOR DE AIRE-NO	8871-23-423	2		
234251	JET,SLOW AIR BLEED-S PURGEUR DE RALENTI, SECON INYR.PGDR.DE AIRE DE BAJA	3744-23-391	2		
234301	LEVER SET,REAR LEVIER ASSEMBLE, ARRIERE JUEGO DE PALANCAS,TRASERA	8871-23-430	1	M/T	
		8872-23-430	1	A/T	
234331	JET,AIR BLEED NO.2 PURGEUR AIR NO 2 INYR.,PURGADOR DE AIRE-NO	8871-23-424	2		
23434B	JET, SLOW AIR BLEED GICLEUR D'AIR INYR.,PGDR DE AIRE DE AVA	8649-23-434	2		
23440	SCREW SET,TH. ADJUST JEU DE VIS REGLAGE ACCEL.	3743-23-440	1		
23446A	SPRING,ADJUST SCREW RESSORT VIS DE REGLAGE	1668-23-462	1	FED. M/T CANADA M/T	
23446B	SPRING RESSORT RESORTE	8871-23-472	1		
234501	SWITCH SET,IDLE INTERRUPTEUR DE RALENTI JGO.DE INTERRUPTOR,AUX.	8871-23-450	1	M/T	
234551	SPRING,RETURN RESSORT DE RAPPEL RESORTE,RETORNO	1663-23-455	1	M/T	
234701	SCREW SET,ADJUST JEU DE VIS DE REGLAGE TORNILLO,JGO.,AJUSTE	8871-23-470	1		

13600

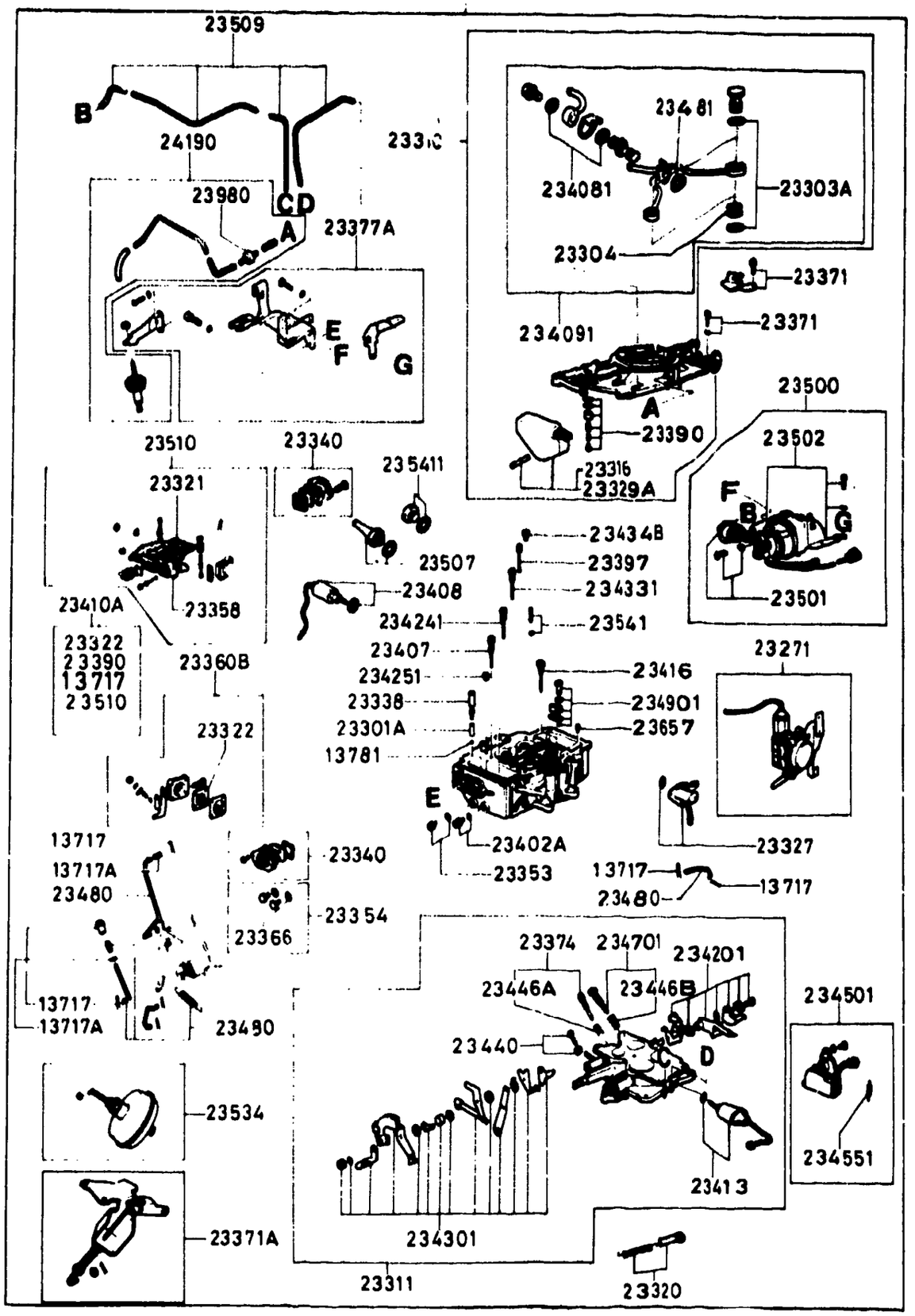

D-CODE (Key No.)	PART NAME	PART No.	Qty.	MODEL DESCRIPTION	VIN (Chassis No.)
23480	ROD & LINK SET JEU TIGE & JOINT	8871-23-480	1		
23481	GASKET JOINT EMPAQUE	0823-23-394	3		
234901	NOZZLE SET,ACCEL. GICLEUR,JEU,ACCELERATEUR BOQUILLAS,JGO.ACELERADOR	8871-23-490	1		
23500	CHOKE SET,SEMI AUTO STARTER SEMI-AUTOMATIQUE	8871-23-500	1		
23501	HOLDER,BIMETAL	8871-23-501	1		
23502	BIMETAL SET BIMETAL BIMETAL	8871-23-502	1		
23507	VALVE SET,CHECK JEU SOUPAPES SURETE JUEGO VALVULA,RETENCION	1570-23-507	1	FED. CANADA	
23509	PIPE,VACUUM CONDUIT A VIDE TUBO VACIO	8868-23-509	1	CALIF.	
		8871-23-509	1	FED. CANADA	
23510	GASKET SET POCHETTE, JOINTS JUEGO DE EMPAQUE	8871-23-510	1		
23534	CHOKE SET,RETURN	8868-23-534	1	CALIF.	
23541	JET,POWER VALVE GICLEUR	8649-23-541	1	CALIF. FED. A/T CANADA A/T	
235411	PLUG BOUCHON TAPON	2183-23-508	1	CALIF.	
23657	PLUG,BLIND BOUCHON TAPON	0107-23-657	1	M/T	
23980	VALVE,DELAY	8871-23-980	1	CALIF. FED. M/T CANADA M/T	

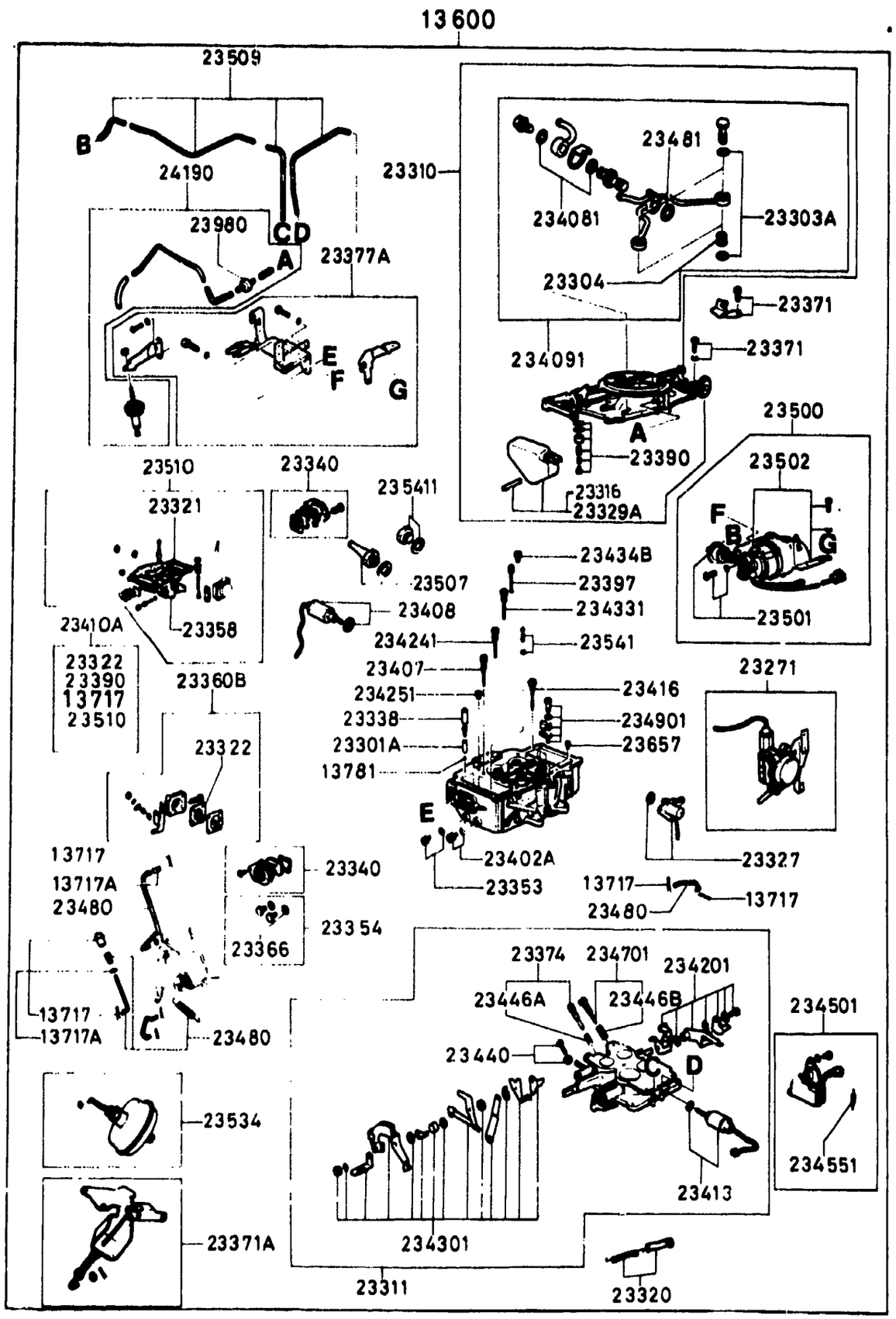

1360A-6★ CARBURETOR (1979 MODEL)

D-CODE (Key No.)	PART NAME	PART No.	Qty.	MODEL DESCRIPTION	VIN (Chassis No.)
24190	DASH POT	8871-24-190	1	CALIF. FED. M/T CANADA M/T	

SECTION NUMBER INDEX (ENGINE)

STARTING LOCATION	SECTION No	SECTION NAME
1–C2	1000A	SHORT ENGINE & GASKET SET
1–D2	1030A	ROTOR HOUSING
1–G2	1040A	HOUSING (FRONT & REAR)
1–C3	1100A	ECCENTRIC SHAFT & FLYWHEEL
1–F3	1110A	ROTOR
1–C4	1300A	IN. MANIFOLD
1–D4	1310A	THERMAL REACTOR
1–E4	1320A	FUEL SYSTEM
1–G4	1330A	AIR CLEANER
1–H4	1350A	STARTING ASSIST SYSTEM
1–I4	1360A	CARBURETOR
1–F6	1371A	EMISSION CONTROLS (AIR PUMP & CONTROL VALVE)
1–H6	1380A	EMISSION CONTROLS (EX. SIDE)
1–C8	1400A	OIL PUMP & FILTER
1–F8	1500A	COOLING SYSTEM
1–K8	1600A	CLUTCH (MANUAL)
1–C9	1700A	T/MISSION CASE (MANUAL)
1–G9	1710A	T/MISSION GEAR (MANUAL)
1–E10	1720A	CHANGE CONTROLS (MANUAL)
1–C11	1800A	ELECTRICAL SYSTEM (ENGINE)
1–H11	1820A	DISTRIBUTOR
1–L11	1830A	ALTERNATOR
1–D12	1840A	STARTER
1–H12	1850A	BATTERY & CABLES
1–C13	1910A	CONVERTER, OIL PUMP & PIPING (AUTOMATIC T/MISSION)
1–F13	1920A	CASE & MAIN CONTROLS (AUTOMATIC T/MISSION)
1–K13	1930A	CLUTCH & PLANETARY GEAR (AUTOMATIC T/MISSION)
1–D14	1940A	LOW, REVERSE & GOVERNOR (AUTOMATIC T/MISSION)
1–G14	1950A	MANUAL LINKAGE (AUTOMATIC T/MISSION)

THE FRAMES IN THIS COLUMN INDICATE :

1–C5	1360AA	CARBURETOR (FED. – 1980 MODEL)
1–H5	1360AB	CARBURETOR (CALIF. – 1980 MODEL)
1–M5	1360AC	CARBURETOR (CANADA – 1980 MODEL)

© 1983 Toyo Kogyo Co., Ltd.
MAY 1983

1360AA CARBURETOR (FED. —1980 MODEL)

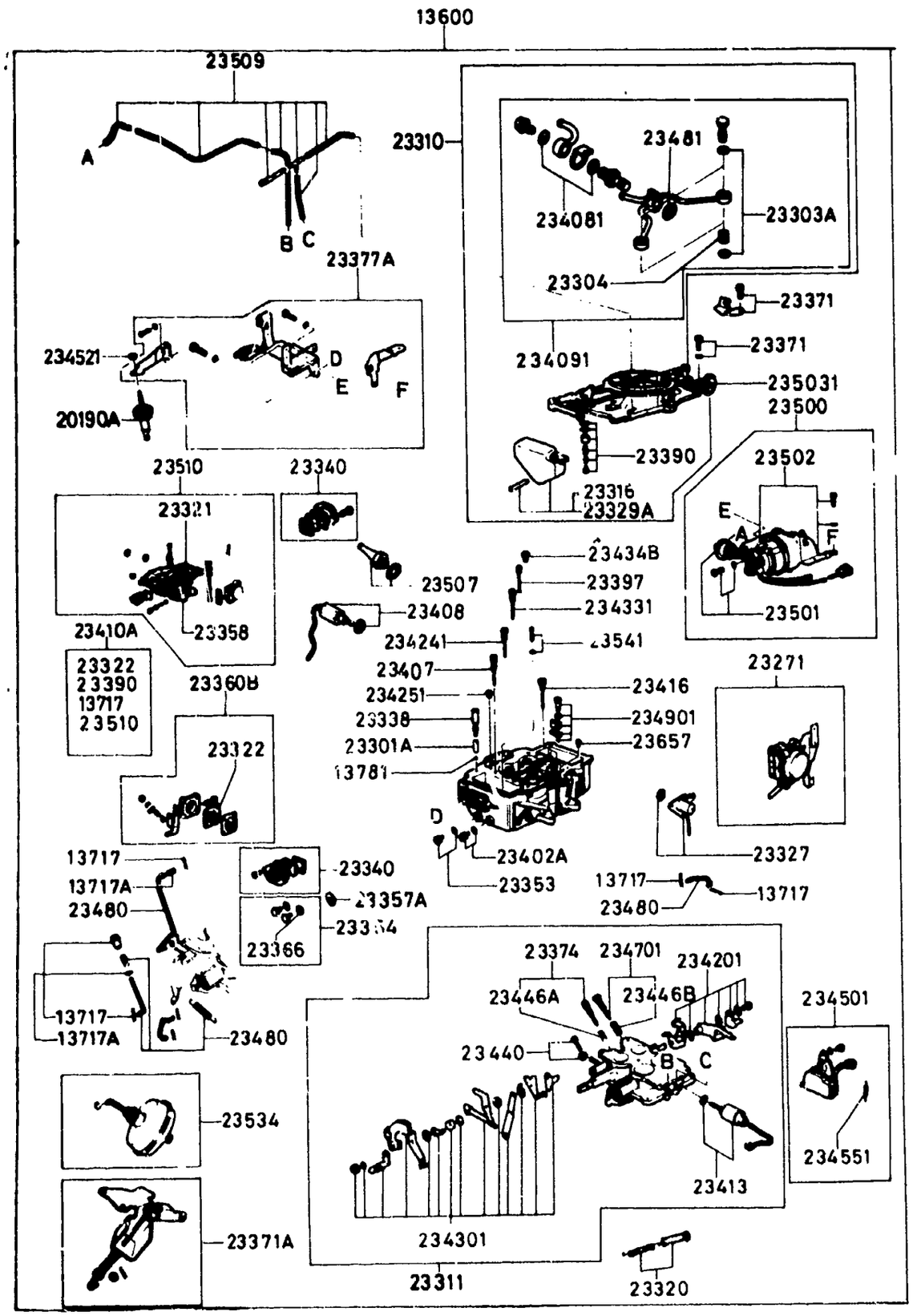

1360AA-1 CARBURETOR (FED.-1980 MODEL)

D-CODE (Key No.)	PART NAME	PART No.	Qty.	MODEL DESCRIPTION	VIN (Chassis No.)
13600	CARBURETOR CARBURATEUR CARBURADOR	8341-13-200A	1	M/T	
		8342-13-200A	1	A/T	
13717	PIN,COTTER GOUPILLE CHAVETA	1663-23-392	7		
13717A	PIN & WASHER SET JEU AXES & RONDELLES	8871-23-530	1		
13781	BALL,STEEL BILLE D'ACIER BOLA,ACERO	0107-13-781	1		
20190A	DASH POT RELAIS	8341-13-215	1	M/T	
23271	CHAMBER SET,DIAPH. CHAMBRE DIAPH. JUEGO DE CAMARA,DIAFRAGMA	8341-23-350	1		
23301A	WEIGHT,PUMP POIDS POMPE CARB.	3743-23-488	1		
23303A	GASKET JOINT EMPAQUE	0730-23-318	4		
23304	STRAINER TAMIS	8871-23-401	2		
23310	HORN,AIR COUVERCLE MONTE PITOS AIRES	8341-23-310	1		
23311	CHAMBER,THROTTLE CHAMBRE	8341-23-330	1	M/T	
		8342-23-330	1	A/T	
23316	FLOAT,FRONT FLOTTEUR,AVANT FLOTADOR,FRENTE	8871-23-328	1		
23320	SPRING SET,RETURN JEU, RESSORT DE RAPPEL JUEGO DE RESORTES,RETORNO	8871-23-380	1		

1360AA CARBURETOR (FED. –1980 MODEL)

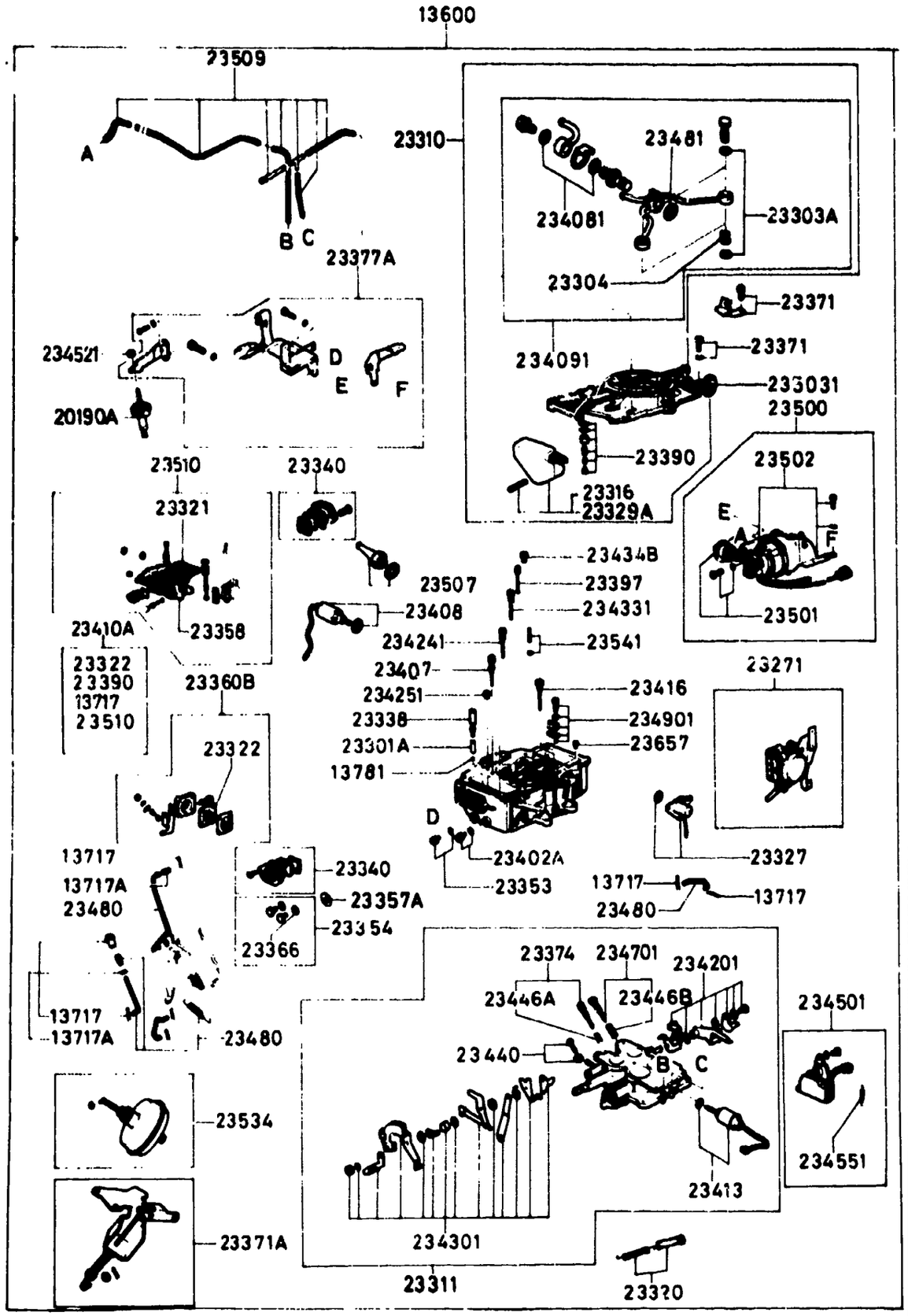

1360AA-2 CARBURETOR (FED.-1980 MODEL)

D-CODE (Key No.)	PART NAME	PART No.	Qty.	MODEL DESCRIPTION	VIN (Chassis No.)
23321	GASKET,FLOAT CHAMBER JOINT CHAMBRE FLOTTEUR	8341-23-327	1		
23322	DIAPHRAGM,CARBURETOR DIAPHRAGME DE CARBURATEUR	1663-23-361A	1		
23327	SOLENOID SOLENOIDE	8871-23-411	1		
23329A	FROAT,REAR FLOTTEUR,ARRIERE FLOTADOR,TRASERA	8871-23-329	1		
23338	PLUG,CHECK BALL PASTILLE	8826-23-338	1		
23340	COVER SET,LEV.GAUGE COUVERCLE	1663-23-340A	2		
23353	JET SET,MAIN 1ST. JEU DE GICLEUR, PRINCIPAL JGO.DE INYR.PRL.-PRMR.	8871-23-421	2		
23354	PLUG SET JEU DE BOUCHONS JUEGO DE TAPONES	8980-23-354	2		
23357A	CLAMP,MAIN JET PLUG	8980-23-357	1		
23358	GASKET,FLANGE JOINT DE FLANGE	8341-23-349	1		
23360B	PUMP SET,ACCEL. JEU POMPE ACCEL.	*1480-23-360	1		SA22C .. 606775-
		8826-23-360	2		SA22C .. 568501 -606774
23366	WASHER RONDELLE ARANDELA	0305-23-356	2		
23	EW SET J DE VIS .ORNILLO,JGO.	8341-23-652	1		
23371A	HOLDER SET,RETURN	8341-23-371	1		

1360AA CARBURETOR (FED. –1980 MODEL)

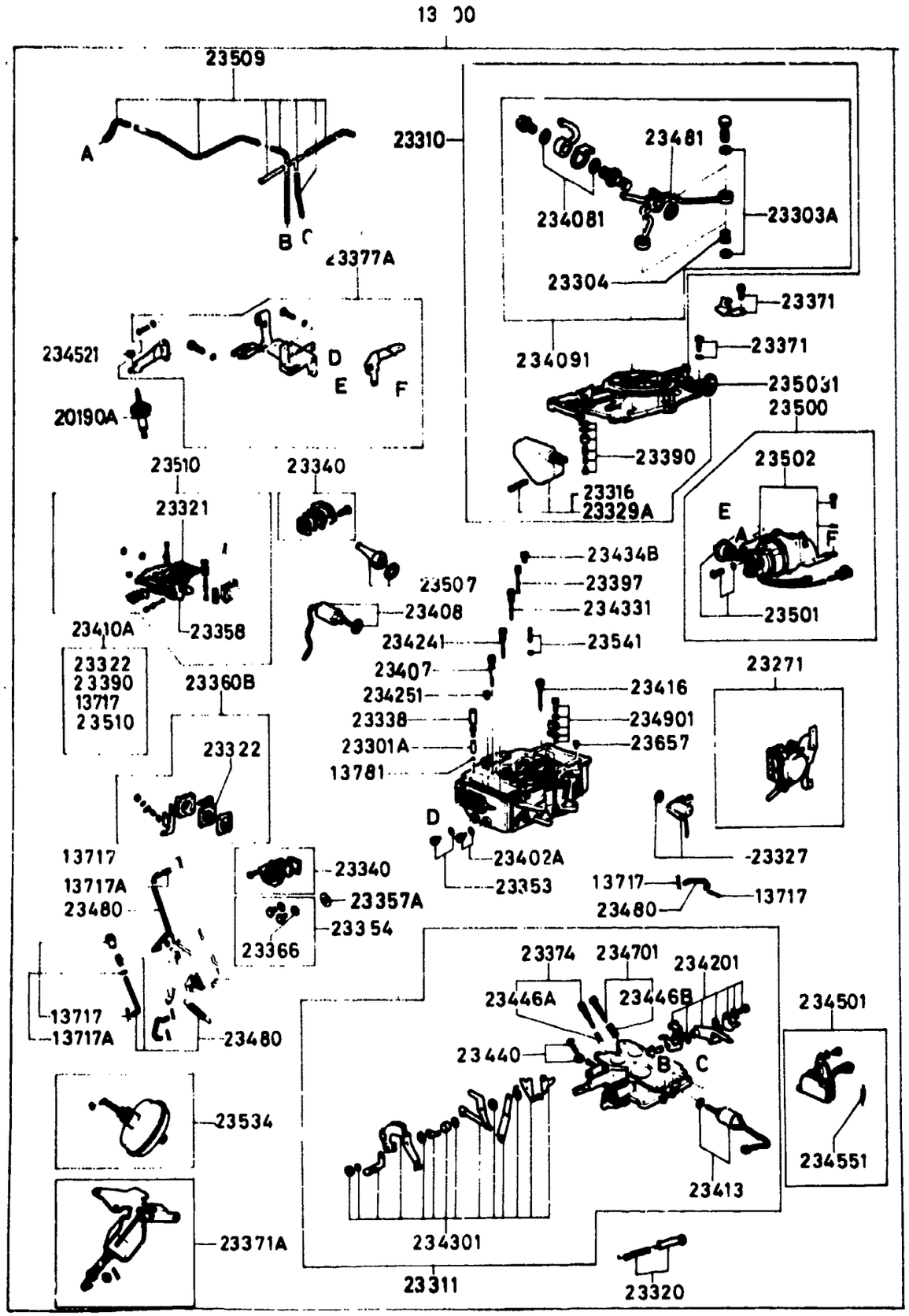

1360AA-3 CARBURETOR (FED.-1980 MODEL)

D-CODE (Key No.)	PART NAME	PART No.	Qty.	MODEL DESCRIPTION	VIN (Chassis No.)
23374	SCREW SET,IDLE ADJ. JEU DE VIS, RALENTI TORNILLO,JGO.,AJUSTE VACI	8871-23-460	1		
23377A	BRACKET SET JEU DE SUPPORTS	8341-23-370	1	M/T	
		8872-23-370	1	A/T	
23390	VALVE SET,FLOAT JEU POINTEAUX JUEGO VALVULA,FLOTADOR	8826-23-390	2		
23397	JET,STEP GICLEUR INYECTOR DE AVANCE	8341-23-426	2		
23402A	JET SET,MAIN 2ND. JEU DE GICLEUR, PRINCIPAL JGU.DE INYR.PRL.-SEG.	0222-23-355B	2		
23407	JET SET,SLOW JEU DE GICLEUR, RALENTI JUEGO DE INYECTORES DE BA	3743-23-425	2	A/T	
		8341-23-425	2	M/T	
23408	VALVE,SOLENOID SOUPAPE DE SOLENOID VALVULA,SOLENOIDO	8871-23-321	1	M/T	
234081	WASHER RONDELLE ARANDELA	0823-23-402A	1		
234091	CONNECTOR SET,FUEL RACCORD D'ESSENCE ASSEMBL JUEGO DEL CONECTOR DEL CA	8871-23-409A	1		
23410A	REPAIR KIT JEU DE PIECES COMPOSANTES JGO.DE REPARACION	8341-23-540	1		
23413	VALVE,SOLENOID	8872-23-322	1		
23416	JET,COASTING	8871-23-491	1	M/T	
234201	LEVER SET,FRONT LEVIER ASSEMBLE, AVANT JUEGO DE PALANCAS,DELANTE	8871-23-420	1	M/T	
		8872-23-420	1	A/T	
234241	JET,AIR BLEED NO.1	8342-23-423	2	A/T	

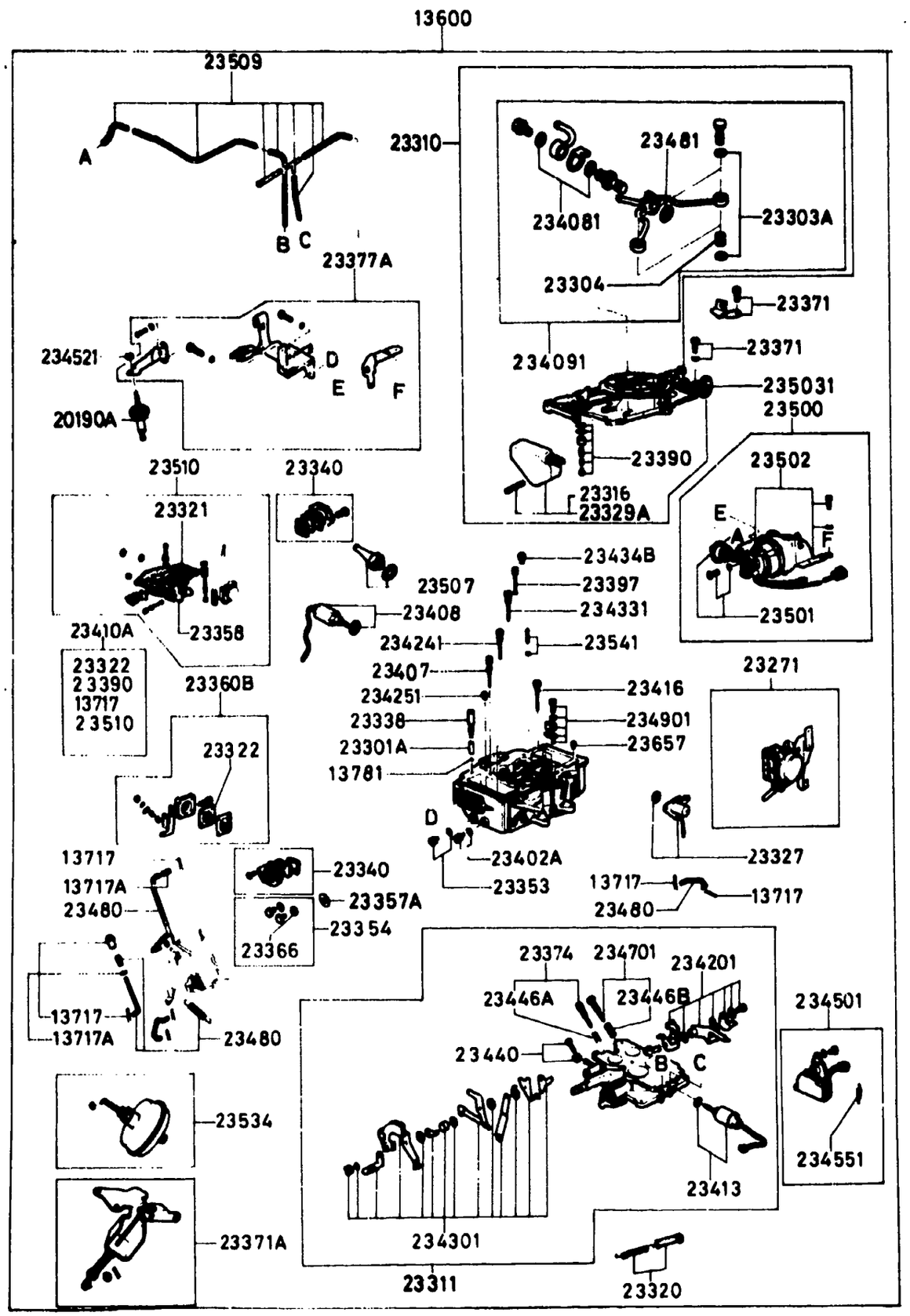

1360AA-4 CARBURETOR (FED.-1980 MODEL)

D-CODE (Key No.)	PART NAME	PART No.	Qty.	MODEL DESCRIPTION	VIN (Chassis No.)
234241 CONT'D	PURGEUR AIR NO 1 INYR.,PURGADOR DE AIRE-NO	8342-23-423			
		8871-23-423	2	M/T	
234251	JET,SLOW AIR BLEED-S PURGEUR DE RALENTI, SECON INYR.PGDR.DE AIRE DE BAJA	3744-23-391	2		
234301	LEVER SET,REAR LEVIER ASSEMBLE, ARRIERE JUEGO DE PALANCAS,TRASERA	8341-23-430	1	M/T	
		8342-23-430	1	A/T	
234331	JET,AIR BLEED NO.2 PURGEUR AIR NO 2 INYR.,PURGADOR DE AIRE-NO	1669-23-424A	2		
23434B	JET,STEP AIR BLEED GICLEUR D'AIR INYR.,PGDR DE AIRE DE AVA	8649-23-434	2		
23440	SCREW SET,TH. ADJUST JEU DE VIS REGLAGE ACCEL.	8341-23-440	1		
23446A	SPRING,ADJUST SCREW RESSORT VIS DE REGLAGE	1668-23-462	1		
23446B	SPRING RESSORT RESORTE	8871-23-472	1		
234501	SWITCH SET,IDLE INTERRUPTEUR DE RALENTI JGO.DE INTERRUPTOR,AUX.	8871-23-450	1	M/T	
234521	NUT,HEXAGON	2090-23-452	1	M/T	
234551	SPRING,RETURN RESSORT DE RAPPEL RESORTE,RETORNO	1663-23-455	1	M/T	
234701	SCREW SET,ADJUST JEU DE VIS DE REGLAGE TORNILLO,JGO.,AJUSTE	8871-23-470	1		
23480	ROD & LINK SET JEU TIGE & JOINT	8341-23-480	1		
23481	GASKET	0823-23-394	3		

1360AA CARBURETOR (FED. –1980 MODEL)

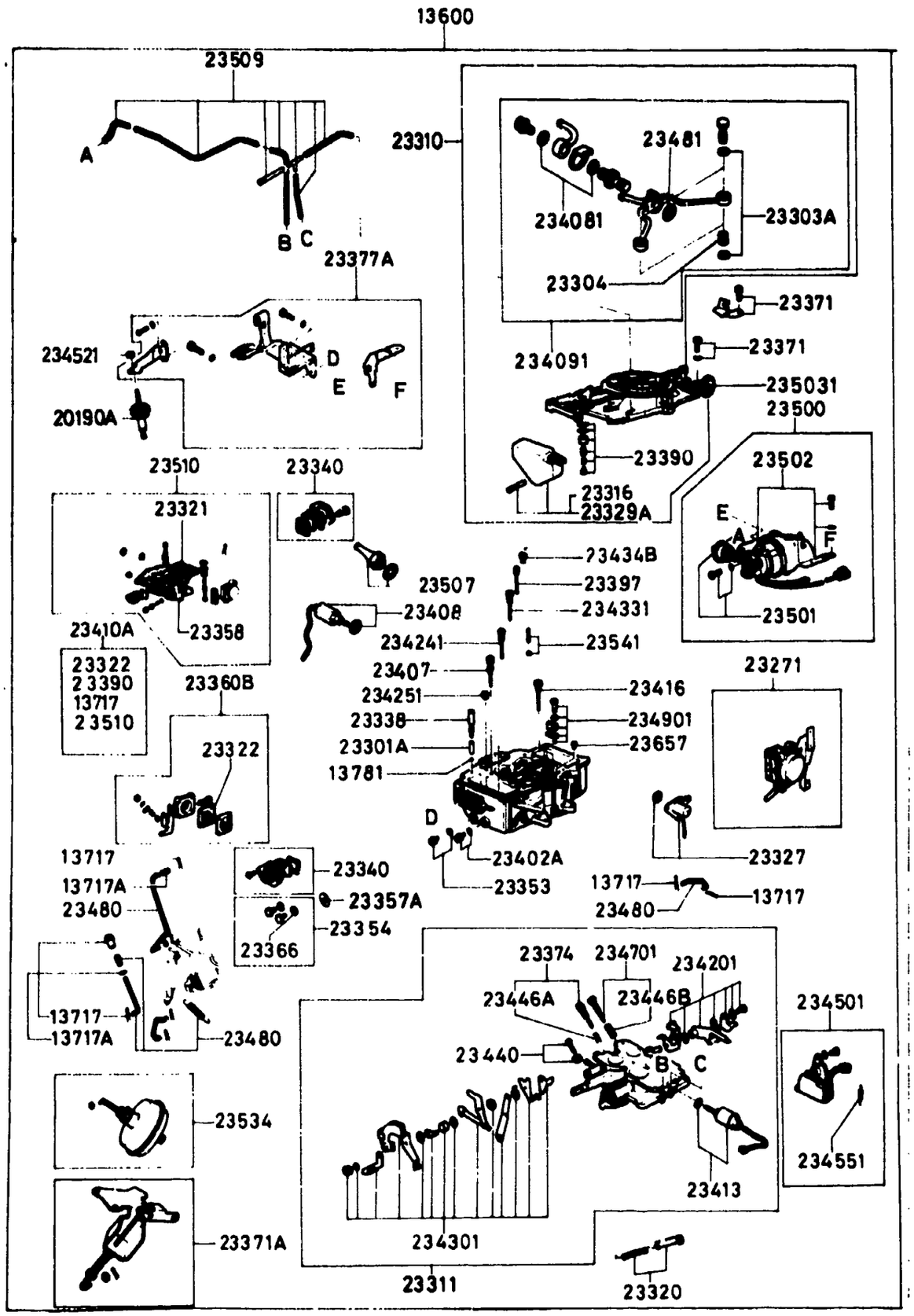

1360AA-5* CARBUPETOR (FED.-1980 MODEL)

D-CODE (Key No.)	PART NAME	PART No.	Qty.	MODEL DESCRIPTION	VIN (Chassis No.)
23481 CONT'D	JOINT EMPAQUE	0823-23-394			
234901	NOZZLE SET,ACCEL. GICLEUR,JEU,ACCELERATEUR BOQUILLAS,JGO.ACELERADOR	8341-23-490	1		
23500	CHOKE SET,SEMI AUTO STARTER SEMI-AUTOMATIQUE	8341-23-500	1		
23501	HOLDER,BIMETAL	8871-23-501	1		
23502	BIMETAL SET BIMETAL BIMETAL	8341-23-502	1		
235031	CHAMBER,CHOKE RETURN	8341-23-503	1		
23507	VALVE SET,CHECK JEU SOUPAPES SURETE EGO VALVULA,RETENCION	1570-23-507	1		
23509	PIPE,VACUUM CONDUIT A VIDE TUBO VACIO	8341-23-509	1		
23510	GASKET SET POCHETTE, JOINTS JUEGO DE EMPAQUE	8341-23-510	1		
23534	CHOKE SET,RETURN	8868-23-534	1		
23541	JET,POWER VALVE GICLEUR	8649-23-541	1		
23657	PLUG,BLIND BOUCHON TAPON	0107-23-657	1	M/T	

1360AB CARBURETOR (CALIF. –1980 MODEL)

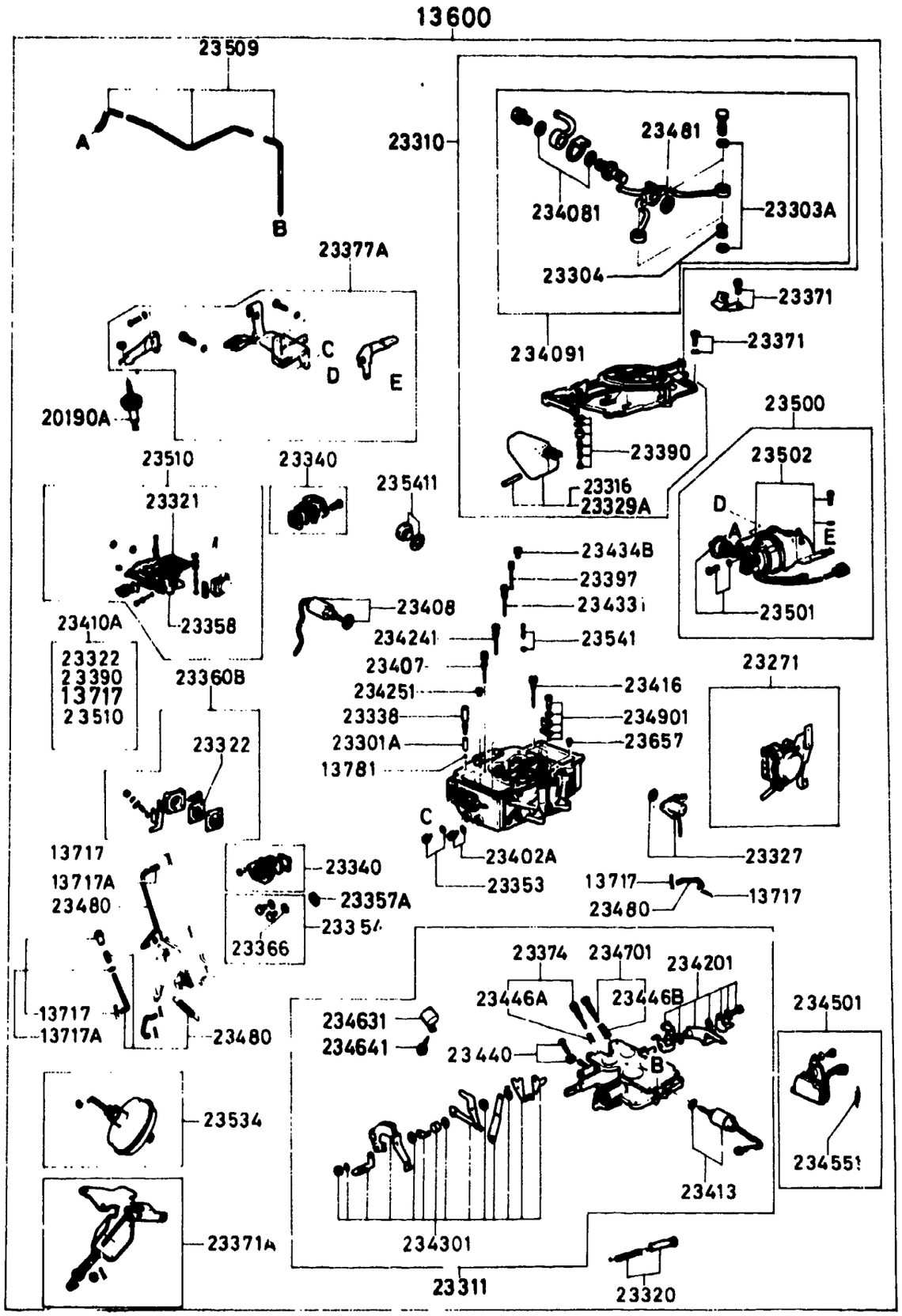

1360AB-1 CARBURETOR (CALIF.-1980 MODEL)

D-CODE (Key No.)	PART NAME	PART No.	Qty.	MODEL DESCRIPTION	VIN (Chassis No.)
13600	CARBURETOR CARBURATEUR CARBURADOR	8344-13-200A	1	M/T	
		8345-13-200A	1	A/T	
13717	PIN,COTTER GOUPILLE CHAVETA	1663-23-392	7		
13717A	PIN & WASHER SET JEU AXES & RONDELLES	8871-23-530	1		
13781	BALL,STEEL BILLE D'ACIER BOLA,ACERO	0107-13-781	1		
20190A	DASH POT RELAIS	8341-13-215	1	M/T	
23271	CHAMBER SET,DIAPH. CHAMBRE DIAPH. JUEGO DE CAMARA,DIAFRAGMA	8871-23-350	1		
23301A	WEIGHT,PUMP POIDS POMPE CARB.	3743-23-488	1		
23303A	GASKET JOINT EMPAQUE	0730-23-318	4		
23304	STRAINER TAMIS	8871-23-401	2		
23310	HORN,AIR COUVERCLE MONTE PITOS AIRES	8344-23-310	1		
23311	CHAMBER,THROTTLE CHAMBRE	8344-23-330	1	M/T	
		8345-23-330	1	A/T	
23316	FLOAT,FRONT FLOTTEUR,AVANT FLOTADOR,FRENTE	8871-23-328	1		
23320	SPRING SET,RETURN JEU, RESSORT DE RAPPEL JUEGO DE RESORTES,RETORNO	8871-23-380	1		

1360AB CARBURETOR (CALIF. –1980 MODEL)

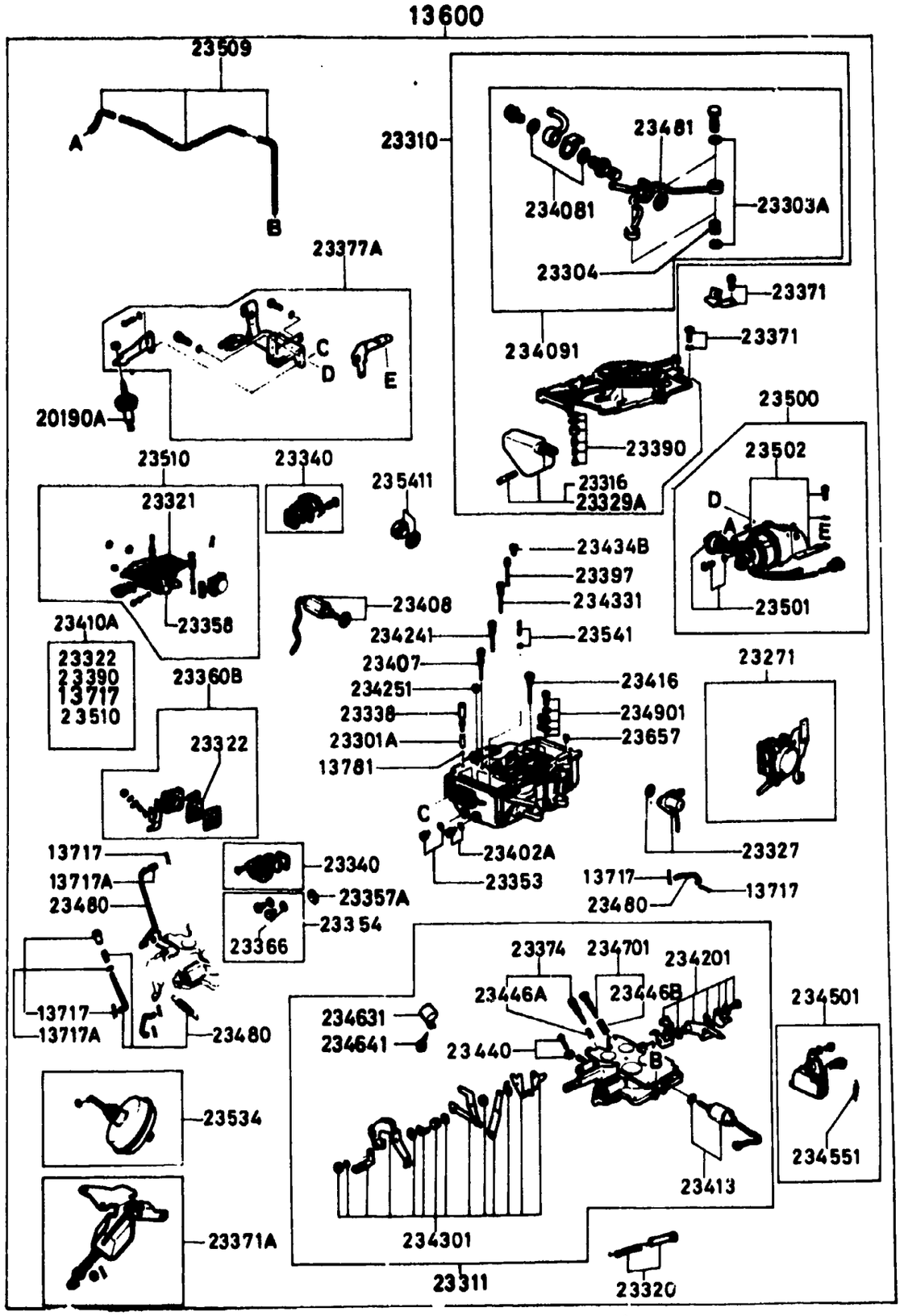

1360AB-2 CARBURETOR (CALIF.-1980 MODEL)

D-CODE (Key No.)	PART NAME	PART No.	Qty.	MODEL/DESCRIPTION	VIN (Chassis No.)
23321	GASKET,FLOAT CHAMBER JOINT CHAMBRE FLOTTEUR	8341-23-327	1		
23322	DIAPHRAGM,CARBURETOR DIAPHRAGME DE CARBURATEUR	1663-23-361A	1		
23327	SOLENOID SOLENOIDE	8871-23-411	1		
23329A	FLOAT, REAR FLOTTEUR,ARRIERE FLOTADOR,TRASERA	8871-23-329	1		
23338	PLUG,CHECK BALL PASTILLE	8826-23-338	1		
23340	COVER SET,LEV.GAUGE COUVERCLE	1663-23-340A	2		
23353	JET SET,MAIN 1ST. JEU DE GICLEUR, PRINCIPAL JGO.DE INYR.PRL.-PRMR.	1881-23-421	2	M/T	
		8755-23-401	2	A/T	
23354	PLUG SET JEU DE BOUCHONS JUEGO DE TAPONES	8980-23-354	2		
23357A	CLAMP,MAIN JET PLUG	8980-23-357	1		
23358	GASKET,FLANGE JOINT DE FLANGE	8341-23-349	1		
23360B	PUMP SET,ACCEL. JEU POMPE ACCEL.	*1480-23-360	1		SA22C .. 606775-
		8826-23-360	2		SA22C .. 568501 -606774
23366	WASHER RONDELLE ARANDELA	0305-23-356	2		
23371	SCREW SET JEU DE VIS TORNILLO,JGO.	8871-23-652	1		

1360AB CARBURETOR (CALIF. –1980 MODEL)

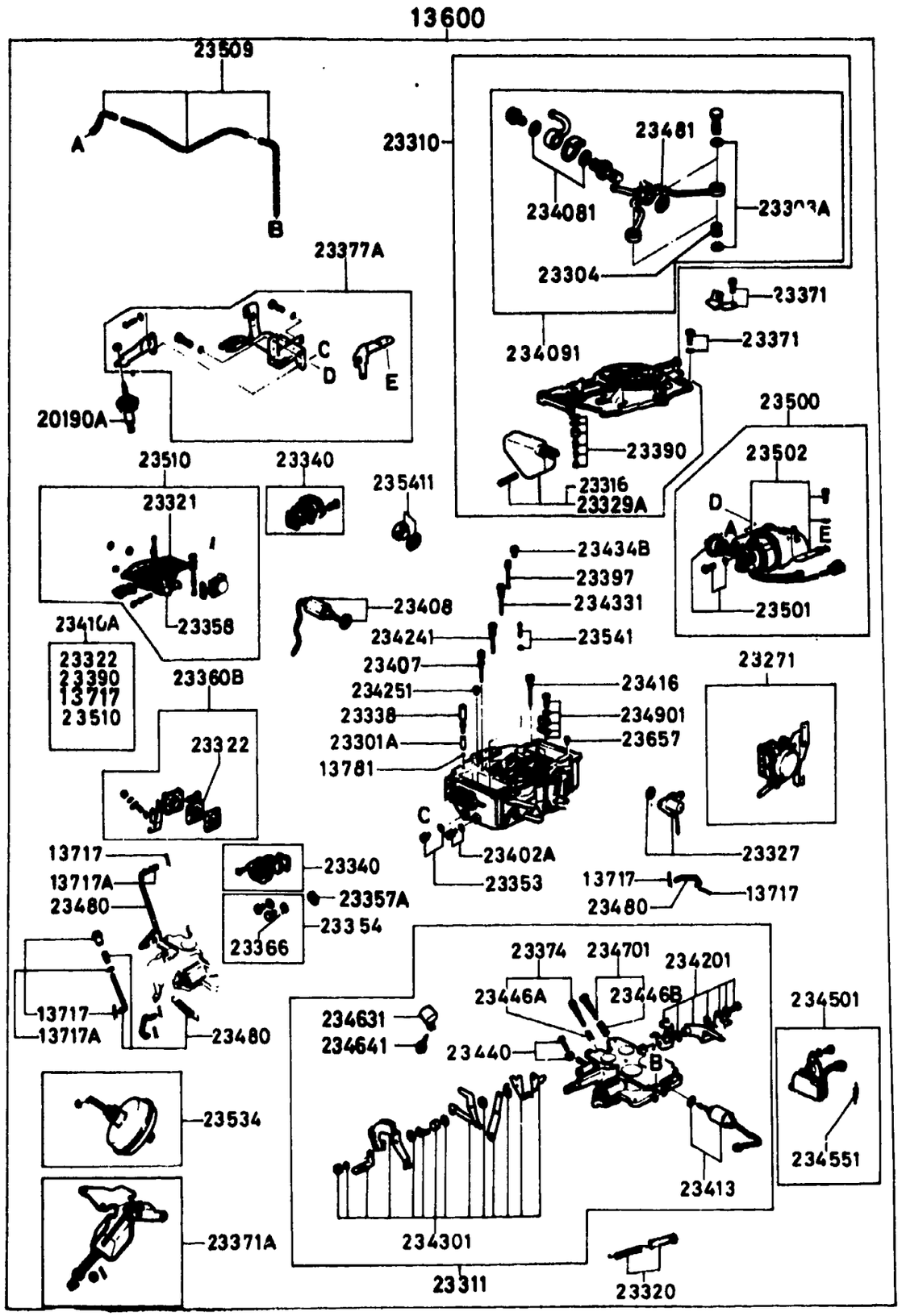

1360AB-3 CARBURETOR (CALIF.-1980 MODEL)

D-CODE (Key No.)	PART NAME	PART No.	Qty.	MODEL/DESCRIPTION	VIN (Chassis No.)
23371A	HOLDER SET,RETURN	8868-23-371	1		
23374	SCREW SET,IDLE ADJ. JEU DE VIS, RALENTI TORNILLO,JGO.,AJUSTE VACI	8344-23-460	1		
23377A	BRACKET SET JEU DE SUPPORTS	8341-23-370	1	M/T	
		8872-23-370	1	A/T	
23390	VALVE SET,FLOAT JEU POINTEAUX JUEGO VALVULA,FLOTADOR	8826-23-390	2		
23397	JET,STEP GICLEUR INYECTOR DE AVANCE	8344-23-426	2		
23402A	JET SET,MAIN 2ND. JEU DE GICLEUR, PRINCIPAL JGO.DE INYR.PRL.-SEG.	0222-23-355B	2		
23407	JET SET,SLOW JEU DE GICLEUR, RALENTI JUEGO DE INYECTORES DE BA	3743-23-425	2		
23408	VALVE,SOLENOID SOUPAPE DE SOLENOID VALVULA,SOLENOIDO	8871-23-321	1	M/T	
234081	WASHER RONDELLE ARANDELA	0823-23-402A	1		
234091	CONNECTOR SET,FUEL RACCORD D'ESSENCE ASSEMBL JUEGO DEL CONECTOR DEL CA	8871-23-409A	1		
23410A	REPAIR KIT JEU DE PIECES COMPOSANTES JGO.DE REPARACION	8341-23-540	1		
23413	VALVE,SOLENOID	8872-23-322	1		
23416	JET,COASTING	8871-23-491	1	M/T	
234201	LEVER SET,FRONT LEVIER ASSEMBLE, AVANT JUEGO DE PALANCAS,DELANTE	8871-23-420	1	M/T	
		8872-23-420	1	A/T	

1360AB CARBURETOR (CALIF. –1980 MODEL)

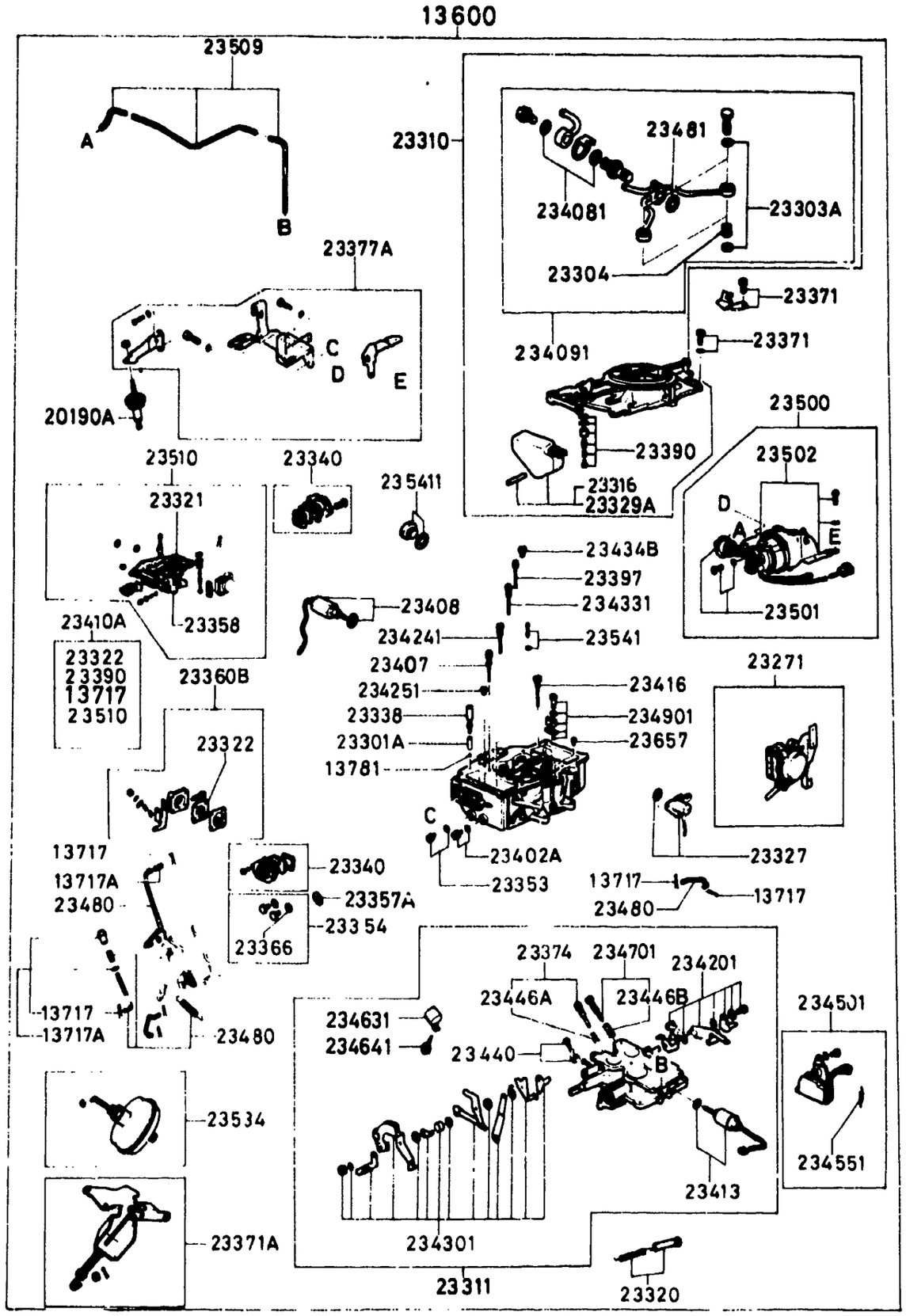

1360AB-4 CARBURETOR (CALIF.-1980 MODEL)

D-CODE (Key No.)	PART NAME	PART No.	Qty.	MODEL DESCRIPTION	VIN (Chassis No.)
234241	JET,AIR BLEED NO.1 PURGEUR AIR NO 1 INYR.,PURGADOR DE AIRE-NO	8342-23-423	2	A/T	
		8871-23-423	2	M/T	
234251	JET,SLOW AIR BLEED-S PURGEUR DE RALENTI, SECON INYR.PGDR.DE AIRE DE BAJA	3744-23-391	2		
234301	LEVER SET,REAR LEVIER ASSEMBLE, ARRIERE JUEGO DE PALANCAS,TRASERA	8344-23-430	1	M/T	
		8345-23-430	1	A/T	
234331	JET,AIR BLEED NO.2 PURGEUR AIR NO 2 INYR.,PURGADOR DE AIRE-NO	1669-23-424A	2		
23434B	JET,SLOW AIR BLEED GICLEUR D'AIR INYR.,PGDR DE AIRE DE AVA	8649-23-434	2		
23440	SCREW SET,TH. ADJUST JEU DE VIS REGLAGE ACCEL.	8341-23-440	1		
23446A	SPRING,ADJUST SCREW RESSORT VIS DE REGLAGE	8980-23-462	1		
23446B	SPRING RESSORT RESORTE	8871-23-472	1		
234501	SWITCH SET,IDLE INTERRUPTEUR DE RALENTI JGO. DE INTERRUPTOR,AUX.	8871-23-450	1	M/T	
234551	SPRING,RETURN RESSORT DE RAPPEL RESORTE,RETORNO	1663-23-455	1	M/T	
234631	CAP BOUCHON TAPA	8344-23-463	1		
234641	SCREW SET JEU DE VIS TORNILLO,JGO.	8344-23-464	1		
234701	SCREW SET,ADJUST JEU DE VIS DE REGLAGE TORNILLO,JGO.,AJUSTE	8871-23-470	1		

1360AB CARBURETOR (CALIF. –1980 MODEL)

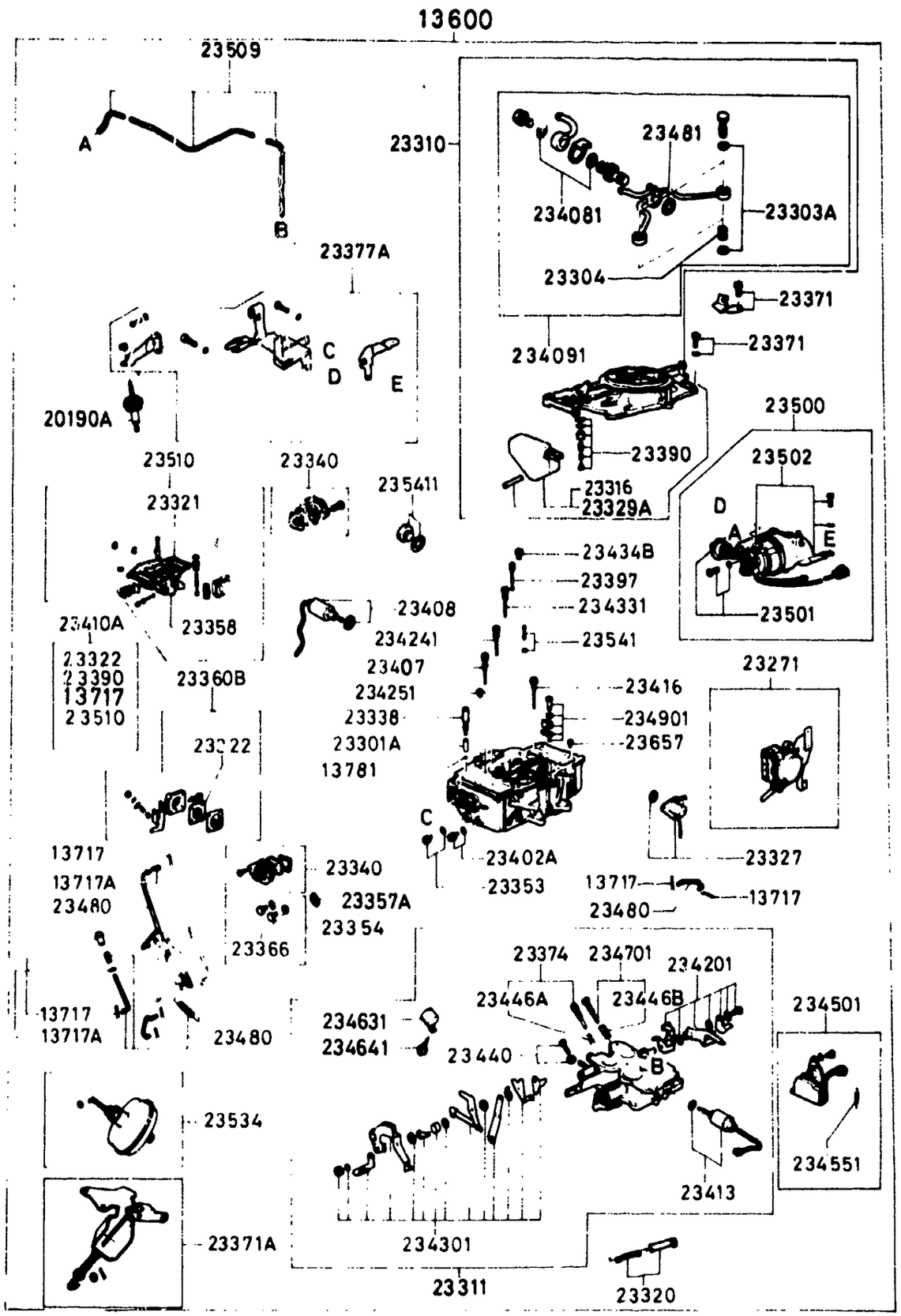

1360AB-5★ CARBURETOR (CALIF.-1980 MODEL)

D-CODE (Key No.)	PART NAME	PART No.	Qty.	MODEL DESCRIPTION	VIN (Chassis No.)
23480	ROD & LINK SET JEU TIGE & JOINT	8344-23-480	1		
23481	GASKET JOINT EMPAQUE	0823-23-394	3		
234901	NOZZLE SET,ACCEL. GICLEUR,JEU,ACCELERATEUR BOQUILLAS,JGO.ACELERADOR	8341-23-490	1		
23500	CHOKE SET,SEMI AUTO STARTER SEMI-AUTOMATIQUE	8344-23-500	1		
23501	HOLDER,BIMETAL	8871-23-501	1		
23502	BIMETAL SET BIMETAL BIMETAL	8344-23-502	1		
23509	PIPE,VACUUM CONDUIT A VIDE TUBO VACIO	8868-23-509	1		
23510	GASKET SET POCHETTE, JOINTS JUEGO DE EMPAQUE	8344-23-510	1	M/T	
		8545-23-510	1	A/T	
23534	CHOKE SET,RETURN	8868-23-534	1		
23541	JET,POWER VALVE GICLEUR	8563-23-541	1		
235411	PLUG BOUCHON TAPON	2183-23-508	1		
23657	PLUG,BLIND BOUCHON TAPON	0107-23-657	1	M/T	

1360AC CARBURETOR (CANADA –1980 MODEL)

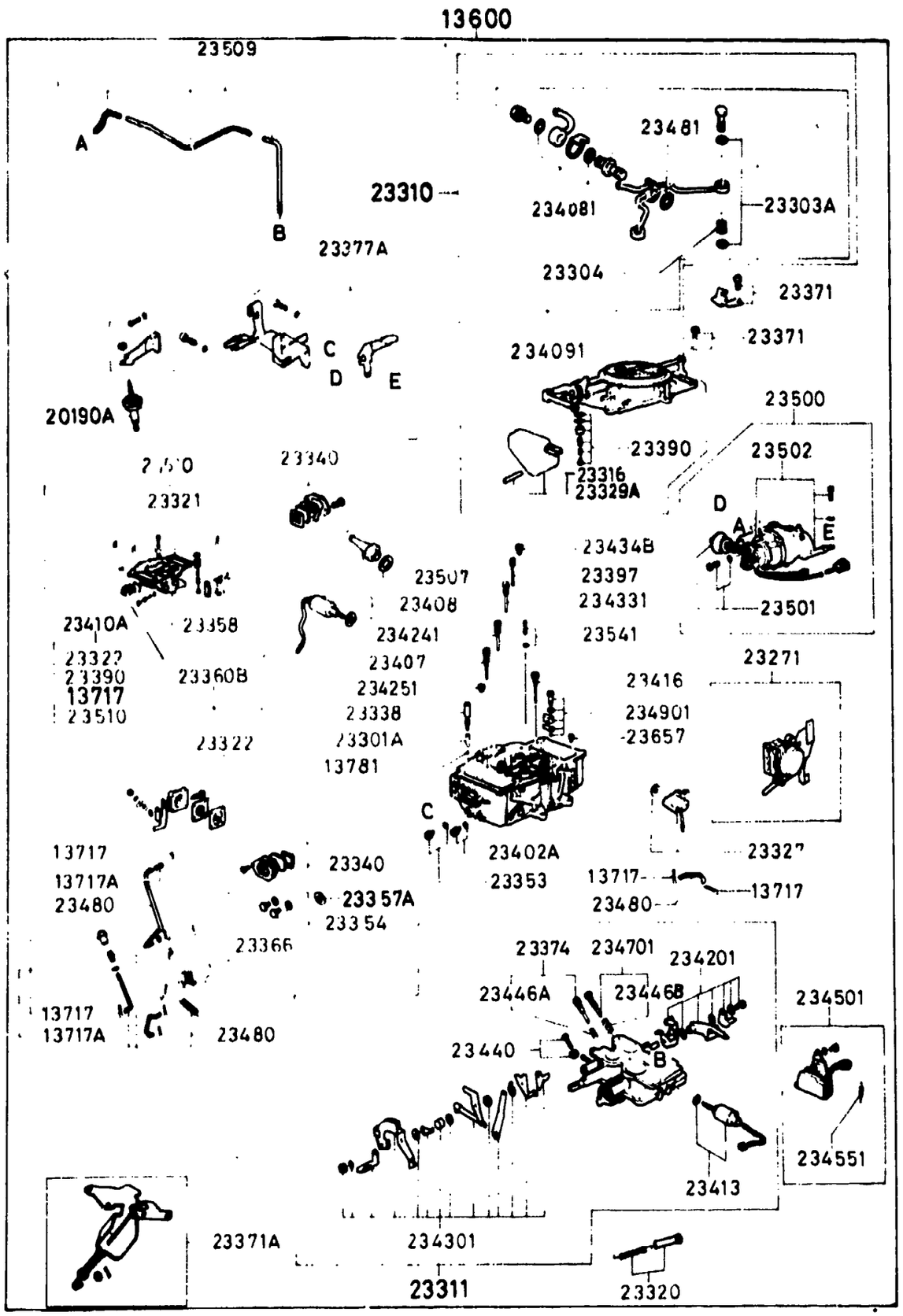

1360AC-1 CARBURETOR (CANADA-1980 MODEL)

D-CODE (Key No.)	PART NAME	PART No.	Qty.	MODEL DESCRIPTION	VIN (Chassis No.)
13600	CARBURETOR CARBURATEUR CARBURADOR	8485-13-200	1	M/T	
		8872-13-200G	1	A/T	
13717	PIN,COTTER GOUPILLE CHAVETA	1663-23-392	7		
13717A	PIN & WASHER SET JEU AXES & RONDELLES	8871-23-530	1		
13781	BALL,STEEL BILLE D'ACIER BOLA,ACERO	0107-13-781	1		
20190A	DASH POT RELAIS	8341-13-215	1	M/T	
23271	CHAMBER SET,DIAPH. CHAMBRE DIAPH. JUEGO DE CAMARA,DIAFRAGMA	8871-23-350	1		
23301A	WEIGHT,PUMP POIDS POMPE CARB.	3743-23-483	1		
23303A	GASKET JOINT EMPAQUE	0730-23-318	4		
23304	STRAINER TAMIS	8871-23-401	2		
23310	HORN,AIR COUVERCLE MONTE PITOS AIRES	8485-23-310	1	M/T	
		8872-23-310	1	A/T	
23311	CHAMBER,THROTTLE CHAMBRE	8871-23-330	1	M/T	
		8872-23-330	1	A/T	
23316	FLOAT, FRONT FLOTTEUR FLOTADOR	8871-23-328	1		
23320	SPRING SET,RETURN JEU, RESSORT DE RAPPEL JUEGO DE RESORTES,RETORNO	8871-23-380	1		

1360AC CARBURETOR (CANADA –1980 MODEL)

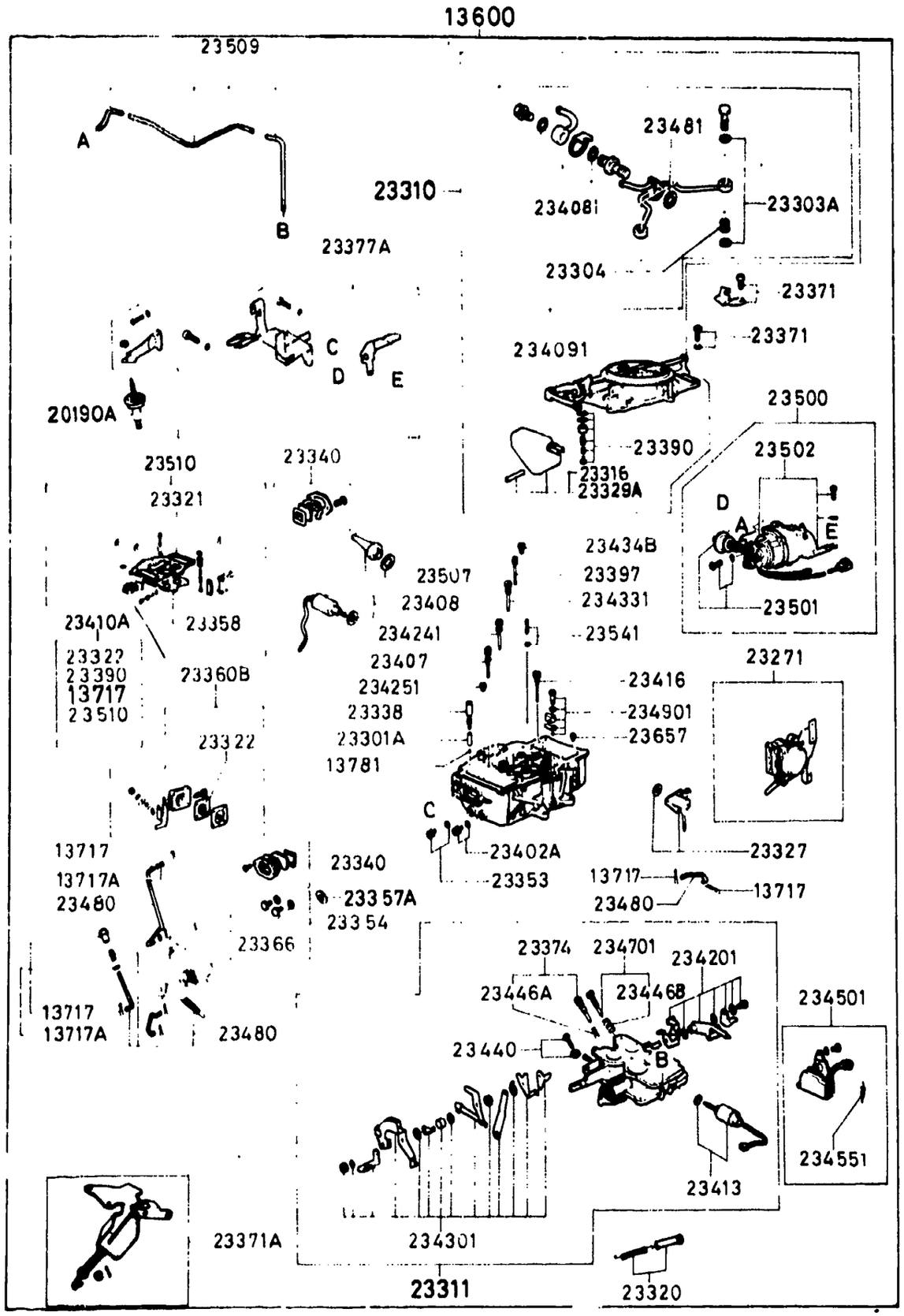

D-CODE (Key No.)	PART NAME	PART No.	Qty.	MODEL DESCRIPTION	VIN (Chassis No.)
23321	GASKET,FLOAT CHAMBER JOINT CHAMBRE FLOTTEUR	8341-23-327	1		
23322	DIAPHRAGM,CARBURETOR DIAPHRAGME DE CARBURATEUR	1663-23-361A	1		
23327	SOLENOID SOLENOIDE	8871-23-411	1		
23329A	**FLOAT, REAR** FLOTTEUR,ARRIERE FLOTTEUR,TRASERA	88 1-23-329	1		
23338	PLUG,CHECK BALL PASTILLE	8826-23-338	1		
23340	COVER SET,LEV.GAUGE COUVERCLE	1663-23-340A	2		
23353	JET SET,MAIN 1ST. JEU DE GICLEUR, PRINCIPAL JGO.DE INYR.PRL.-PRMR.	8871-23-421	2		
23354	PLUG SET JEU DE BOUCHONS JUEGO DE TAPONES	1663-23-354	4	A/T	
		6980-23-354	2	M/T	
23357A	CLAMP,MAIN JET PLUG	8980-23-357	1	M/T	
23358	GASKET,FLANGE JOINT DE FLA SE	8341-23-349	1		
23360B	PUMP SET,ACCEL. JEU POMPE ACCEL.	*1480-23-360	1	M/T	SA22C .. 506775-
		8826-23-360	1	A/T	SA22C .. 568501-
			1	M/T	SA22C .. 568501 -606774
23366	WASHER RONDELLE ARANDELA	0305-23-356	2	M/T	
			4	A/T	
23371	SCREW SET JEU DE VIS	8871-23-652	1		

SECTION NUMBER INDEX (ENGINE)

STARTING LOCATION	SECTION No	SECTION NAME
1–C2	1000A	SHORT ENGINE & GASKET SET
1–D2	1030A	ROTOR HOUSING
1–G2	1040A	HOUSING (FRONT & REAR)
1–C3	1100A	ECCENTRIC SHAFT & FLYWHEEL
1–F3	1110A	ROTOR
1–C4	1300A	IN. MANIFOLD
1–D4	1310A	THERMAL REACTOR
1–E4	1320A	FUEL SYSTEM
1–G4	1330A	AIR CLEANER
1–H4	1350A	STARTING ASSIST SYSTEM
1–I4	1360A	CARBURETOR
1–F6	1371A	EMISSION CONTROLS (AIR PUMP & CONTROL VALVE)
1–H6	1380A	EMISSION CONTROLS (EX. SIDE)
1–C8	1400A	OIL PUMP & FILTER
1–F8	1500A	COOLING SYSTEM
1–K8	1600A	CLUTCH (MANUAL)
1–C9	1700A	T/MISSION CASE (MANUAL)
1–G9	1710A	T/MISSION GEAR (MANUAL)
1–E10	1720A	CHANGE CONTROLS (MANUAL)
1–C11	1800A	ELECTRICAL SYSTEM (ENGINE)
1–H11	1820A	DISTRIBUTOR

STARTING LOCATION	SECTION No.	SECTION NAME
1–L11	1830A	ALTERNATOR
1–D12	1840A	STARTER
1–H12	1850A	BATTERY & CABLES
1–C13	1910A	CONVERTER, OIL PUMP & PIPING (AUTOMATIC T/MISSION)
1–F13	1920A	CASE & MAIN CONTROLS (AUTOMATIC T/MISSION)
1–K13	1930A	CLUTCH & PLANETARY GEAR (AUTOMATIC T/MISSION)
1–D14	1940A	LOW, REVERSE & GOVERNOR (AUTOMATIC T/MISSION)
1–G14	1950A	MANUAL LINKAGE (AUTOMATIC T/MISSION)

THE FRAMES IN THIS COLUMN INDICATE :

1–M5	1360AC	CARBURETOR (CANADA — 1980 MODEL)
1–F6	1371A	EMISSION CONTROLS (AIR PUMP & CONTROL VALVE)
1–H6	1380A	EMISSION CONTROLS (EX. SIDE, M/T 1979 MODEL)
1–K6	1380AA	EMISSION CONTROLS (EX. SIDE, A/T 1979 MODEL)
1–N6	1380AB	EMISSION CONTROLS (EX. SIDE, M/T 1980 MODEL)

© 1983 Toyo Kogyo Co., Ltd.
MAY 1983

1360AC CARBURETOR (CANADA –1980 MODEL)

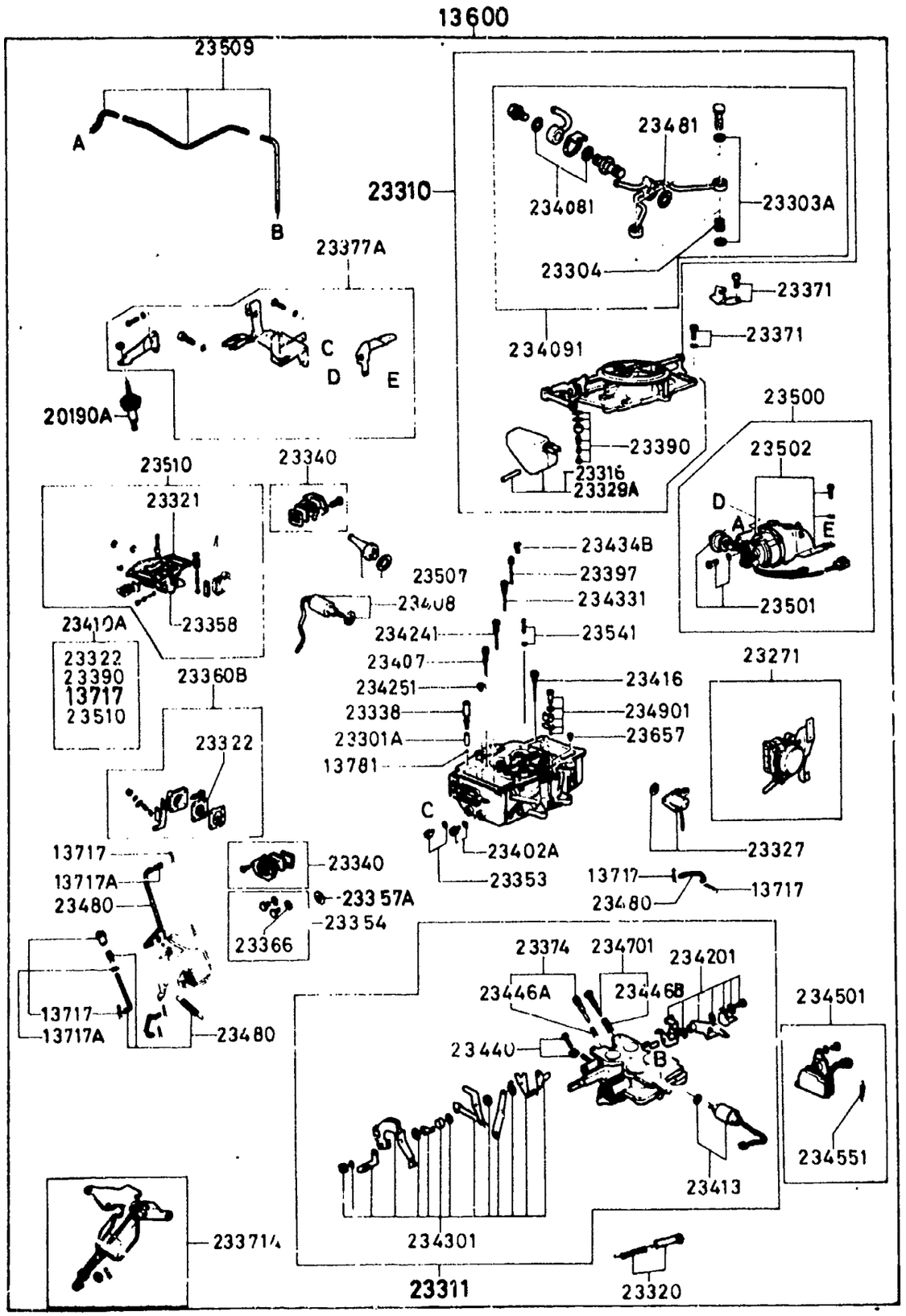

1360AC-3 CARBURETOR (CANADA-1980 MODEL)

D-CODE (Key No.)	PART NAME	PART No.	Qty.	MODEL · DESCRIPTION	VIN (Chassis No.)
23371 CONT'D	TORNILLO,JGO.	8871-23-652			
23371A	HOLDER SET,RETURN	8871-23-371	1		
23374	SCREW SET,IDLE ADJ. JEU DE VIS, RALENTI TORNILLO,JGO.,AJUSTE VACI	8871-23-460	1		
23377A	BRACKET SET JEU DE SUPPORTS	8341-23-370	1	M/T	
		8872-23-370	1	A/T	
23390	VALVE SET,FLOAT JEU POINTEAUX JUEGO VALVULA,FLOTADOR	8826-23-390	2		
23397	JET,STEP GICLEUR INYECTUR DE AVANCE	8555-23-426	2		
23402A	JET SET,MAIN 2ND. JEU DE GICLEUR, PRINCIPAL JGO.DE INYR.PRL.-SEG.	0222-23-355B	2		
23407	JET SET,SLOW JEU DE GICLEUR, RALENTI JUEGO DE INYECTORES DE BA	3743-23-425	2		
23408	VALVE,SOLENOID SOUPAPE DE SOLENOID VALVULA,SOLENOIDO	8871-23-321	1	M/T	
234081	WASHER RONDELLE ARANDELA	0823-23-402A	1		
234091	CONNECTOR SET,FUEL RACCORD D'ESSENCE ASSEMBL JUEGO DEL CONECTOR DEL CA	8871-23-409A	1		
23410A	REPAIR KIT JEU DE PIECES COMPOSANTES JGO.DE REPARACION	8341-23-540	1		
23413	VALVE,SOLENOID	8872-23-32[illegible]	1		
23416	JET,COASTING	8871-23-491	1	M/T	
234201	LEVER SET,FRONT LEVIER ASSEMBLE, AVANT JUEGO DE PALANCAS,DELANTE	8871-23-420	1	M/T	
		8872-23-420	1	A/T	

1360AC CARBURETOR (CANADA --1980 MODEL)

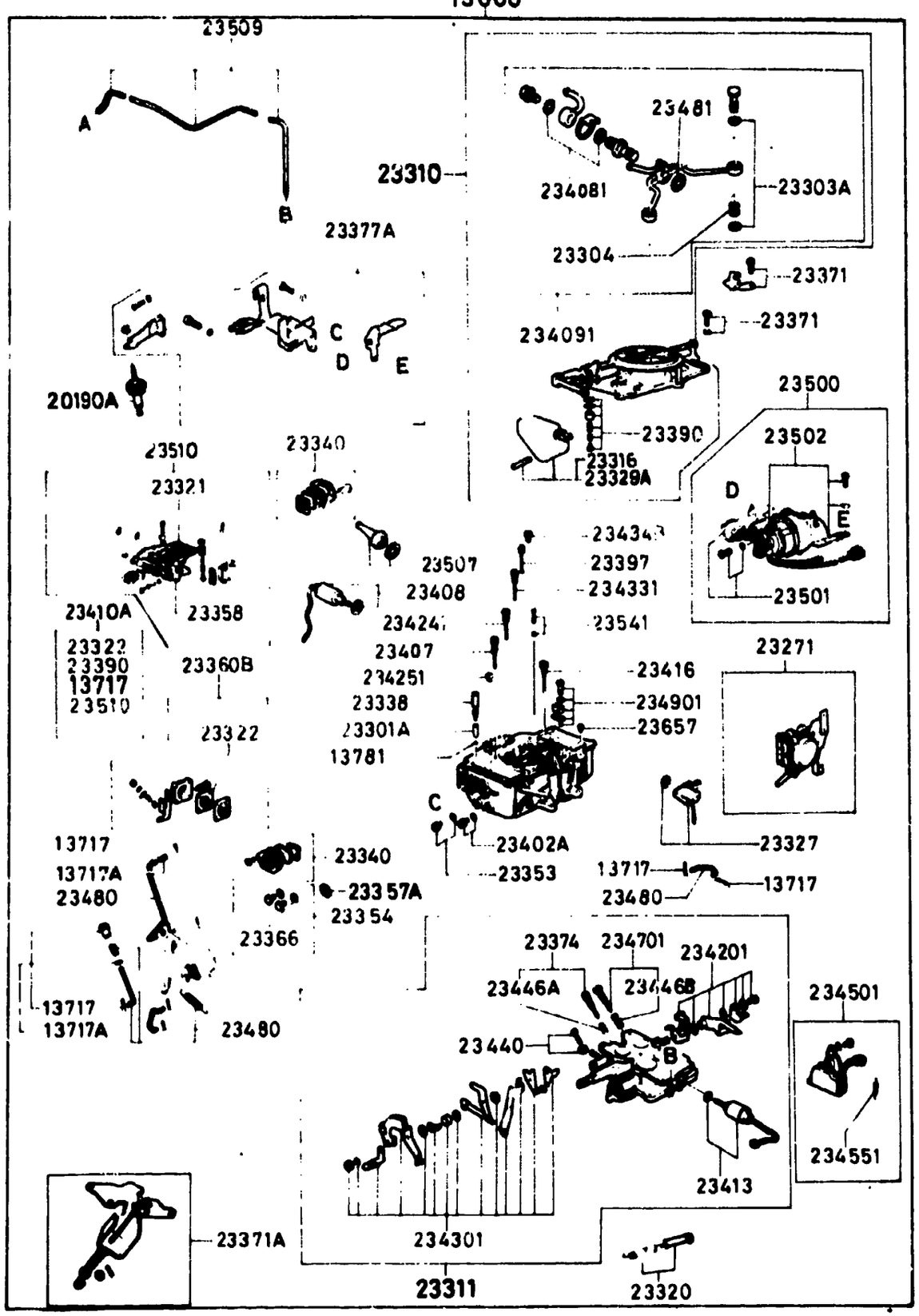

1360AC-4 CARBURETOR (CANADA-1980 MODEL)

D-CODE (Key No.)	PART NAME	PART No.	Qty.	MODEL DESCRIPTION	VIN (Chassis No.)
234241	JET,AIR BLEED NO.1 PURGEUR AIR NO 1 INYR.,PURGADOR DE AIRE-NO	8871-23-423	2		
234251	JET,SLOW AIR BLEED-S PURGEUR DE RALENTI, SECON INYR.PGDR.DE AIRE DE BAJA	3744-23-391	2		
234301	LEVER SET,REAR LEVIER ASSEMBLE, ARRIERE JUEGO DE PALANCAS,TRASERA	8871-23-430	1	M/T	
		8872-23-430	1	A/T	
234331	JET,AIR BLEED NO.2 PURGEUR AIR NO 2 INYR.,PURGADOR DE AIRE-NO	8871-23-424	2		
23434B	JET,SLOW AIR BLEED GICLEUR D'AIR INYR.,PGDR DE AIRE DE AVA	8649-23-434	2		
23440	SCREW SET,TH. ADJUST JEU DE VIS REGLAGE ACCEL.	3743-23-440	1		
23446A	SPRING,ADJUST SCREW RESSORT VIS DE REGLAGE	1668-23-462	1	M/T	
23446B	SPRING RESSORT RESORTE	8871-23-472	1		
234501	SWITCH SET,IDLE INTERRUPTEUR DE RALENTI JGO.DE INTERRUPTOR,AUX.	8871-23-450	1	M/T	
234551	SPRING,RETURN RESSORT DE RAPPEL RESORTE,RETORNO	1663-23-455	1	M/T	
234701	SCREW SET,ADJUST JEU DE VIS DE REGLAGE TORNILLO,JGO.,AJUSTE	8871-23-470	1		
23480	ROD & LINK SET JEU TIGE & JOINT	8871-23-480	1		
23481	GASKET JOINT EMPAQUE	0823-23-394	3		
234901	NOZZLE SET,ACCEL. GICLEUR,JEU,ACCELERATEUR BOQUILLAS,JGO.ACELERADOR	8871-23-490	1		

1360AC CARBURETOR (CANADA –1980 MODEL)

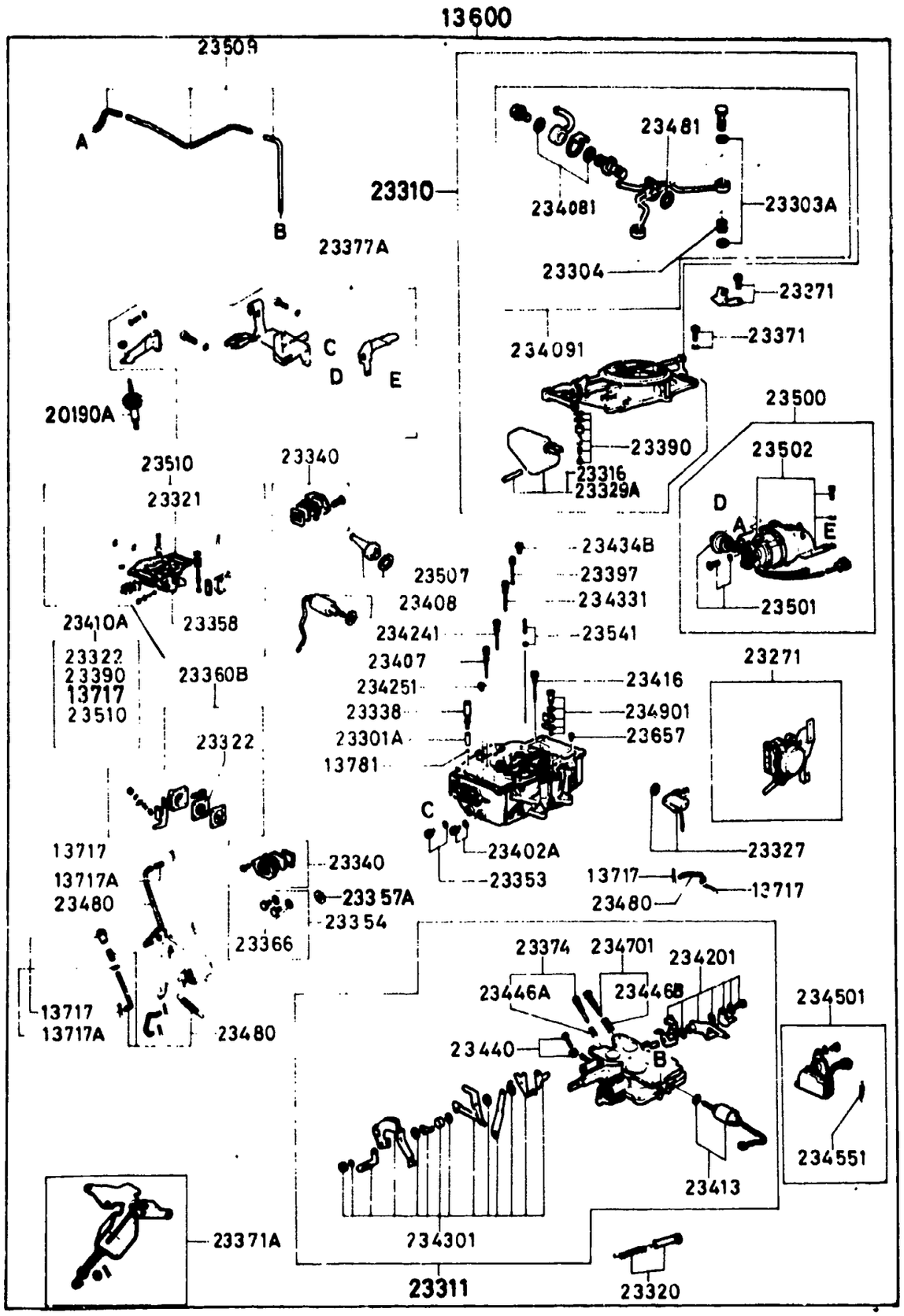

1360AC-5* CARBURETOR (CANADA-1980 MODEL)

D-CODE (Key No.)	PART NAME	PART No.	Qty.	MODEL DESCRIPTION	VIN (Chassis No.)
23500	CHOKE SET,SEMI AUTO STARTER SEMI-AUTOMATIQUE	8871-23-500	1		
23501	HOLDER,BIMETAL	8871-23-501	1		
23502	BIMETAL SET BIMETAL BIMETAL	8871-23-502	1		
23507	VALVE SET,CHECK JEU SOUPAPES SURETE JUEGO VALVULA,RETENCION	1570-23-507	1		
23509	PIPE,VACUUM CONDUIT A VIDE TUBO VACIO	8871-23-509	1		
23510	GASKET SET <A > POCHETTE, JOINTS JUEGO DE EMPAQUE	*8341-23-510	1		SA22C .. 624203-
		8871-23-510	1		SA22C .. 568501 -624202
23541	JET,POWER VALVE GICLEUR	8649-23-541	1	A/T	
23657	PLUG,BLIND BOUCHON TAPON	0107-23-657	1	M/T	

1371A EMISSION CONTROLS (AIR PUMP & CONTROL VALVE)

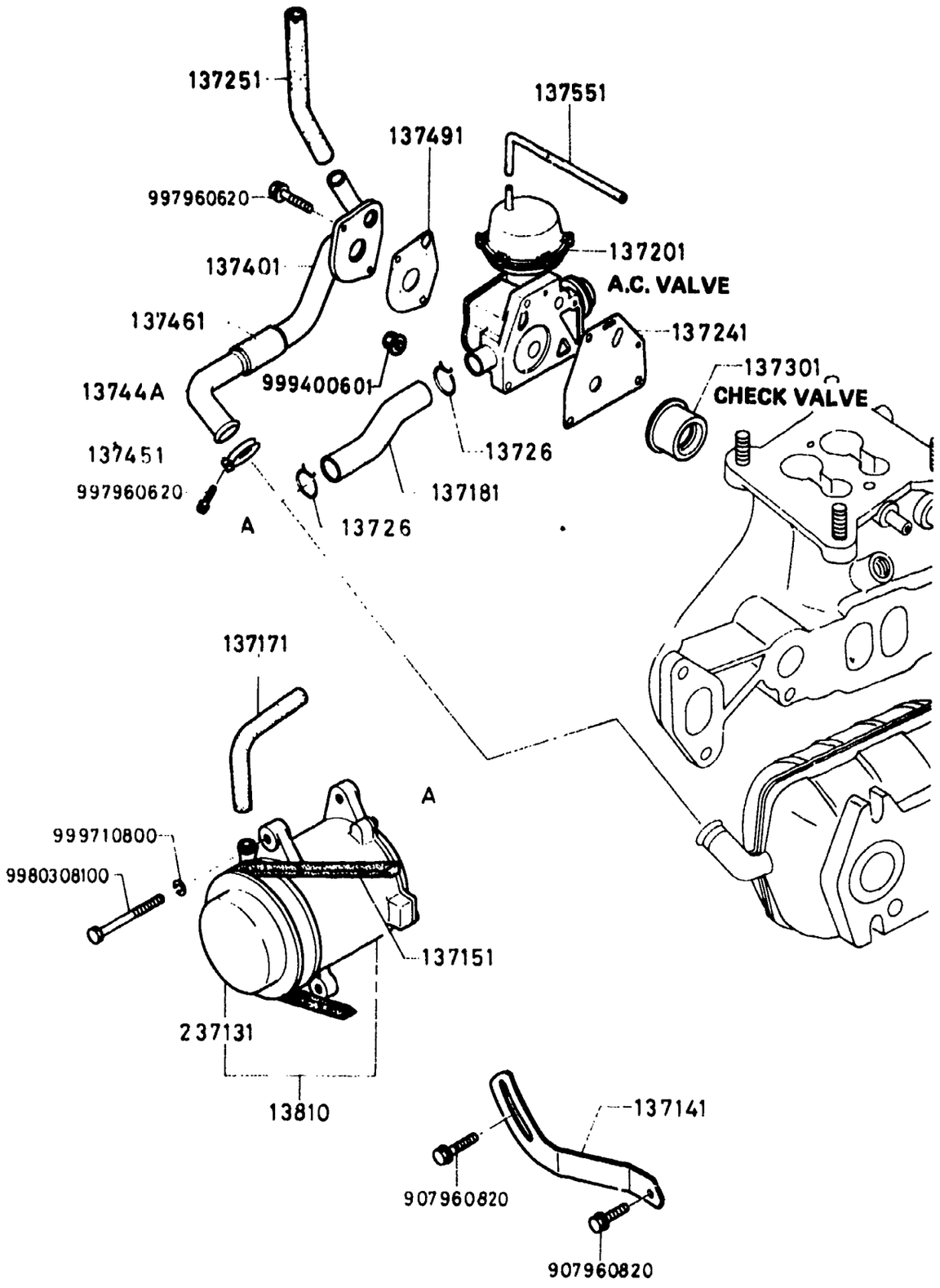

1371A-1 EMISSION CONTROLS (AIR PUMP & CONTROL VALVE)

D-CODE (Key No.)	PART NAME	PART No.	Qty.	MODEL / DESCRIPTION	VIN (Chassis No.)
137141	STRAP,AIR PUMP ATTACHE, POMPE A AIR FLEJE,BOMBA DE AIRE	1757-13-714	1		
137151	BELT'V' COURROIE CORREA EN 'V'	1757-13-715	1		
137171	HOSE,AIR CONDUITE D'AIR MANGUERA, AIRE	1757-13-717	1		
137181	HOSE,AIR CONDUITE D'AIR MANGUERA, AIRE	8871-13-718	1		
137201	VALVE,AIR CONTROL SOUPAPE, REGLAGE AIR VALVULA,CONTROL AIRE	8342-13-720	1	80 MODEL FED. A/T 80 MODEL CALIF. A/T	
		8871-13-720B	1	79 MODEL 80 MODEL FED. M/T 80 MODEL CALIF. M/T 80 MODEL CANDA	
137241	GASKET,A.C.VALVE JOINT, CLAPET EMPAQUE, VALVULA A.C.	8871-13-724A	1		
137251	HOSE,AIR <A> CONDUITE D'AIR MANGUERA, AIRE	8868-13-725	1		SA22C .. 559740-
		8871-13-725	1		SA22C .. 500001 -559739
13726	CLIP,AIR HOSE ATTACHE, DURITE D'AIR GAZA PARA MANGUERA DE AIR	2329-13-726	2		
137301	VALVE,CHECK SOUPAPE DE RETENUE VALVULA,RETENCION	8501-13-730B	1		
137401	PIPE,AIR CONDUIT, AIR TUBO AIRE	8871-20-740	1		SA22C .. 500001 -559739
		8871-20-740A	1		SA22C .. 559740-
13744A	PIPE,AIR CONDUIT, AIR TUBO AIRE	8871-13-744	1		SA22C .. 500001 -559739
		8871-13-744A	1		SA22C .. 559740-

1371A EMISSION CONTROLS (AIR PUMP & CONTROL VALVE)

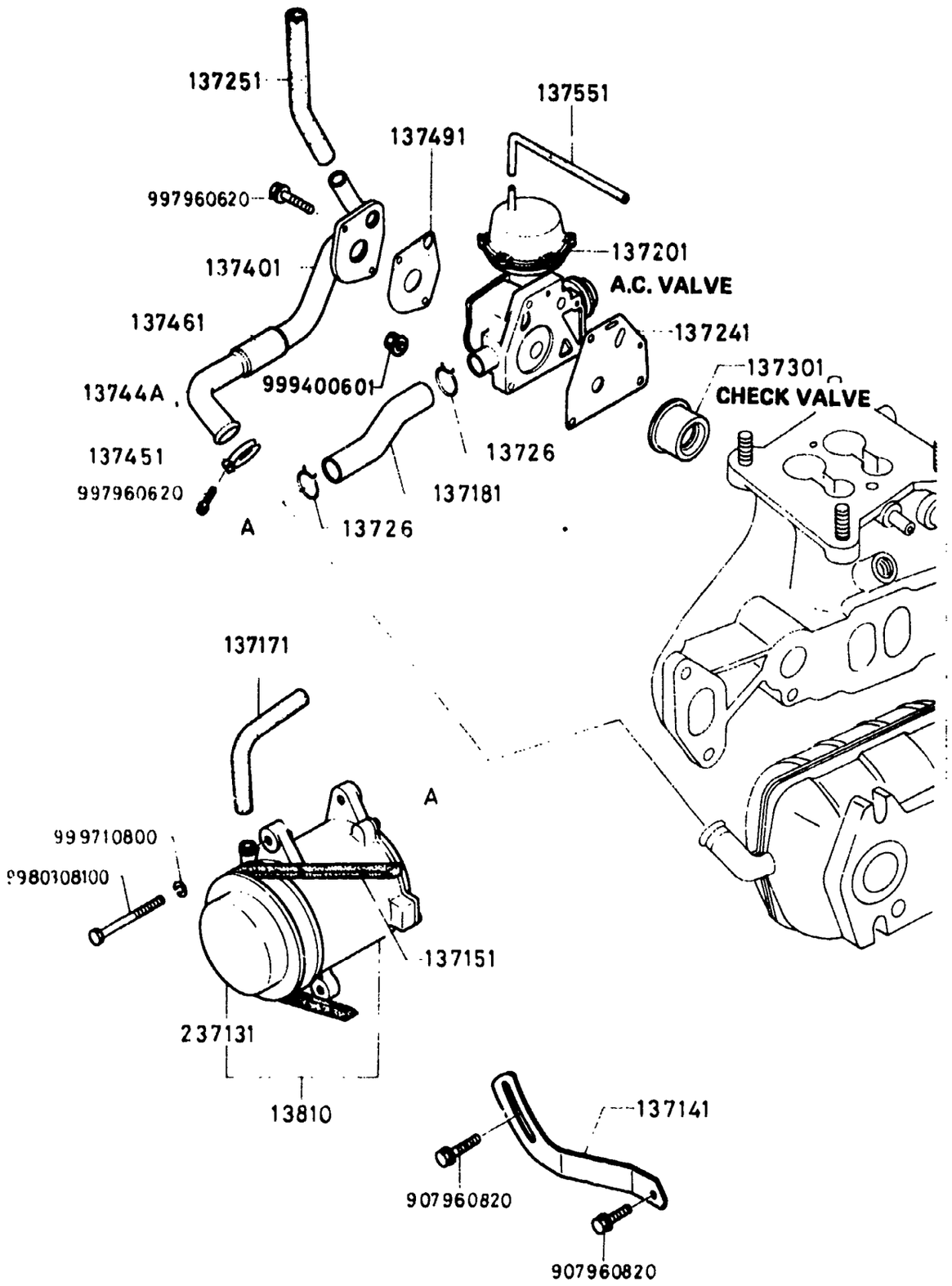

1371A-2* EMISSION CONTROLS (AIR PUMP & CONTROL VALVE)

D-CODE (Key No.)	PART NAME	PART No.	Qty.	MODEL DESCRIPTION	VIN (Chassis No.)
137451	BAND COLLIER DE SERRAGE	8871-13-745	1		
137461	CLIP,AIR HOSE ATTACHE, DURITE D'AIR GAZA PARA MANGUERA DE AIR	8871-13-746A	1		SA22C .. 500001 -559739
	<A >	8871-13-746B	1		SA22C .. 559740 -566640
	<A >	8871-13-746C	1		SA22C .. 566641-
137491	GASKET JOINT EMPAQUE	8871-13-749	1		
137551	TUBE,BALANCE TUBE DE COMPENSATION TUBO,EQUILIBRIO	9935-10-4190	1	(URD.BY 9935104999)	
13810	PUMP,AIR POMPE A AIR BOMBA DE AIRE	1757-13-710A	1		
237131	PULLEY,AIR PUMP POULIE, POMPE A AIR POLEA BOMBA DE AIRE	1757-23-713A	1		

1380A EMISSION CONTROLS (EX. SIDE, M/T 1979 MODEL)

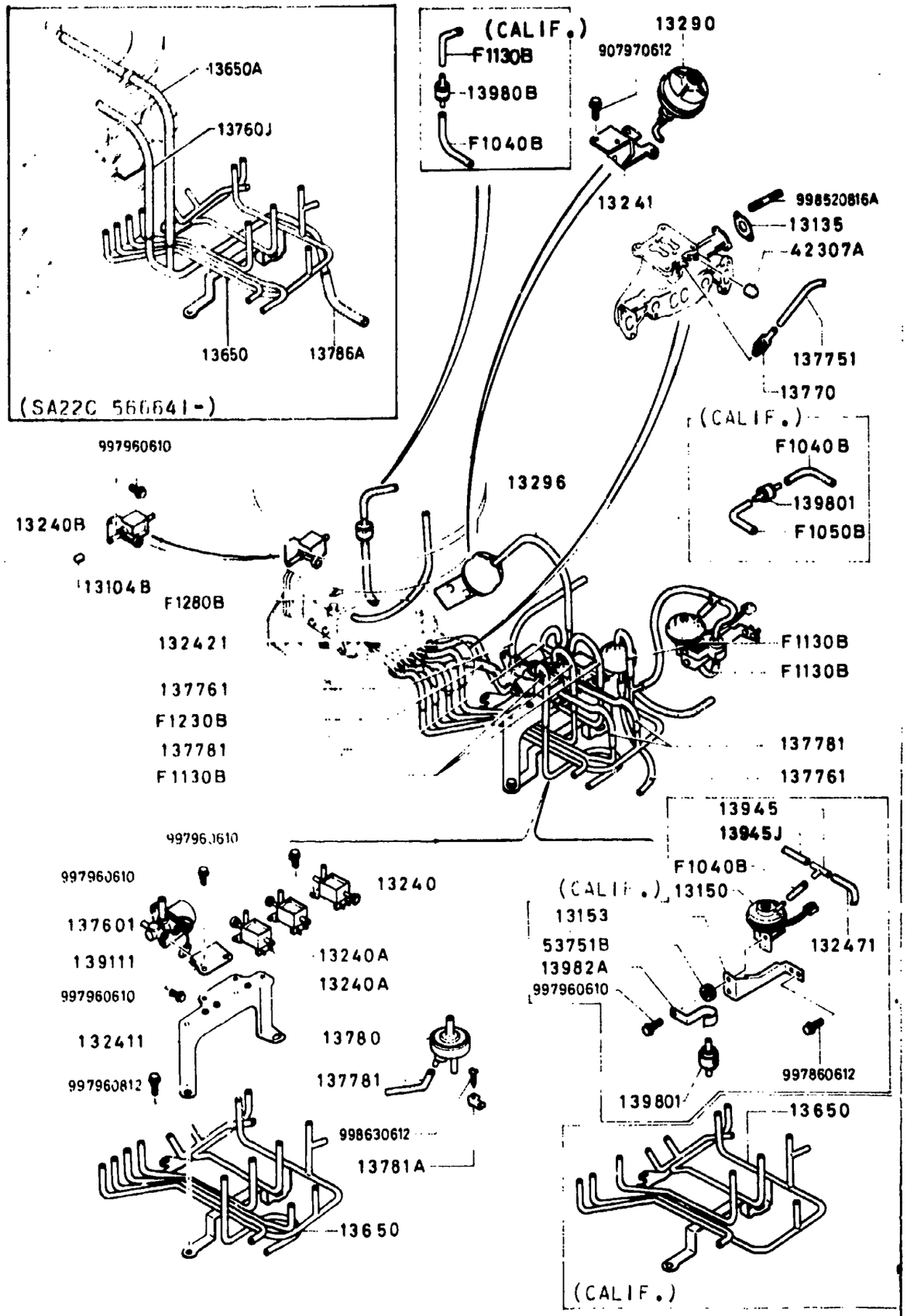

1380A-1 EMISSION CONTROLS (EX.SIDE,M/T 1979 MODEL)

D-CODE (Key No.)	PART NAME	PART No.	Qty.	MODEL DESCRIPTION	VIN (Chassis No.)
F1040B	HOSE,FUEL FLEXIBLE ESSENCE	9935-10-4040	3	(ORD.BY 9935104999) CALIF.	
F1050B	HOSE,FUEL FLEXIBLE ESSENCE	9935-10-4060	1	(ORD.BY 9935104999) CALIF.	
F1130B	HOSE,FUEL FLEXIBLE ESSENCE	9935-10-4095	3 5	(ORD.BY 9935104999) FED. & CANADA CALIF.	
F1230B	HOSE,FUEL FLEXIBLE ESSENCE	9935-10-8120	1	(ORD.BY 9935108999)	
F1280B	HOSE,VACUUM DURITE DE DEPRESSION	9935-10-8280	1	(ORD.BY 9935108999)	
13104B	CAP BOUCHON TAPA	1010-13-104	1 2	CALIF. FED. & CANADA	
13135	GASKET JOINT EMPAQUE	8527-13-135A	1		
13150	SWITCH,VACUUM INTERRUPTEUR	8735-13-150	1	CALIF.	
13153	BRACKET SUPPORT SOPORTE	8868-13-151	1	CALIF.	SA22C .. 500001 -541729
		8868-13-151A	1	CALIF.	SA22C .. 541730-
13240	VALVE,3WAY SOUPAPE A TROIS VOIES	3597-13-240A	1		
13240A	VALVE,3WAY SOUPAPE A TROIS VOIES	8735-13-240A	1 2	FED. & CANADA CALIF.	
13240B	VALVE,3WAY SOUPAPE A TROIS VOIES	8553-13-240A	1		
13241	BRACKET,ACTUATOR SUPPORT	8871-13-291A	1		
132411	BRACKET ATTACHE SOPORTE	8871-13-241B	1		

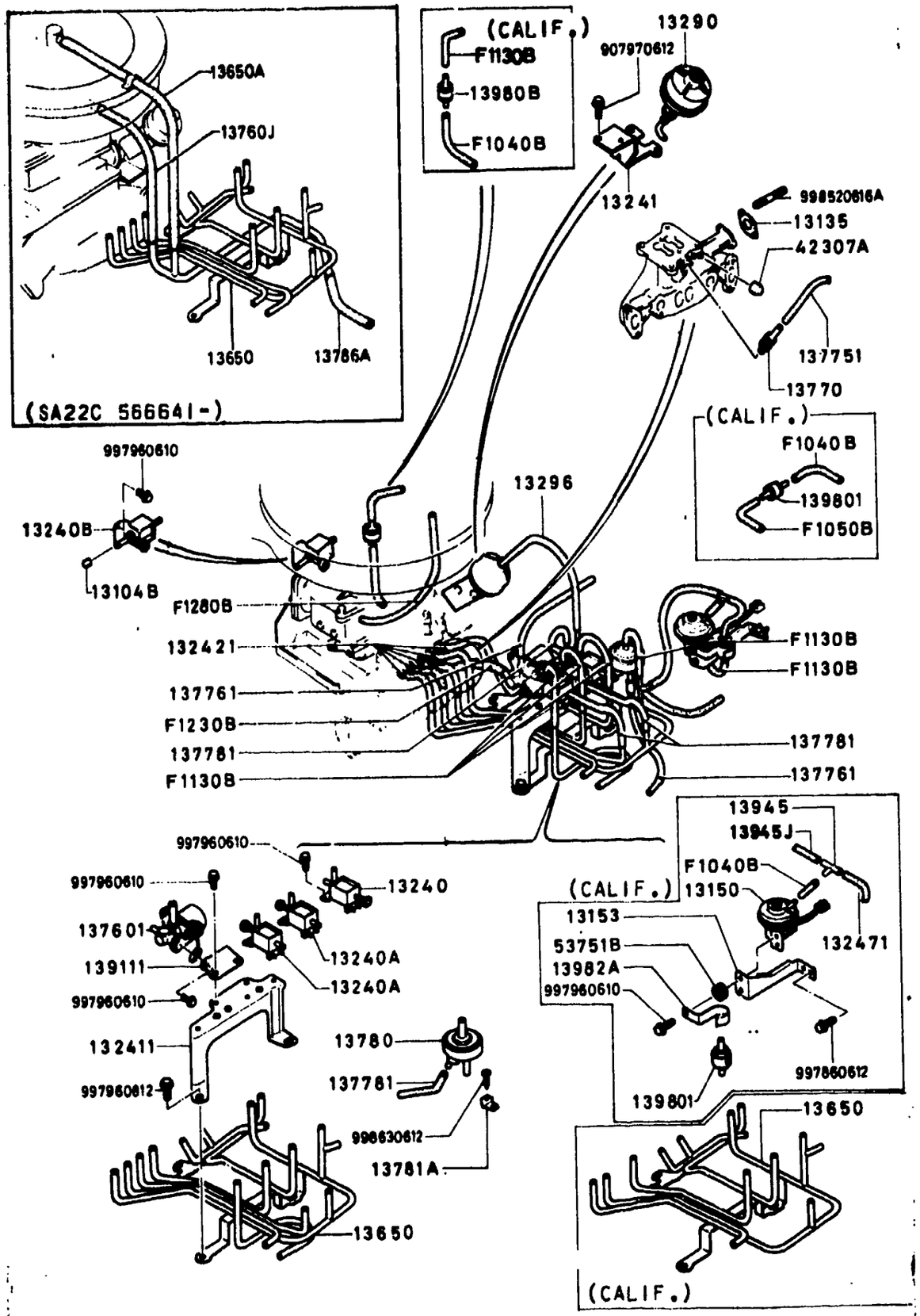

1380A-2 EMISSION CONTROLS (EX.SIDE,M/T 1979 MODEL)

D-CODE (Key No.)	PART NAME		PART No.	Qty.	MODEL/DESCRIPTION	VIN (Chassis No.)
132421	HOSE,VACUUM DURITE DE DEPRESSION		9935-10-4130	5	(ORD. BY 9935104999)	
132471	HOSE,VACUUM DURITE DE DEPRESSION		C871-13-247A	1	CALIF.	SA22C .. 500001 -536457
			9935-10-4075	1	(ORD.BY 9935104999) CALIF.	SA22C .. 536458-
13290	ACTUATOR COMMANDE		3648-13-290	1		
13296	HOSE,AIR CONDUITE D'AIR		8871-13-296B	1		
13650	PIPE,VACUUM CONDUIT A VIDE		8868-13-650C	1	CALIF.	SA22C .. 500001 -504153
		<A >	8868-13-650D	1	CALIF.	SA22C .. 504154 -566640
			8868-13-650E	1	CALIF.	SA22C .. 566641-
			8871-13-650C	1	FED. ■ CANADA	SA22C .. 500001 -504153
		<A >	8871-13-650D	1	FED. ■ CANADA	SA22C .. 504154 -566640
		<C >	8871-13-650F	1	FED. ■ CANADA	SA22C .. 566641-
13650A	HOSE,AIR CONDUITE D,AIR MANGUERA,AIRE		9935-10-8370	1	(ORD.BY 9935108999) CALIF.	SA22C .. 566641-
13760J	HOSE,AIR		9935-10-8120	1	(ORD.BY 9935108999)	SA22C .. 566641-
137601	VALVE,COASTING,NO.2 SOUPAPE		8871-13-760	1		
13770	COMPENSATOR,ALTITUDE COMPENSATEUR D'ALTITUDE		8761-13-770	1		

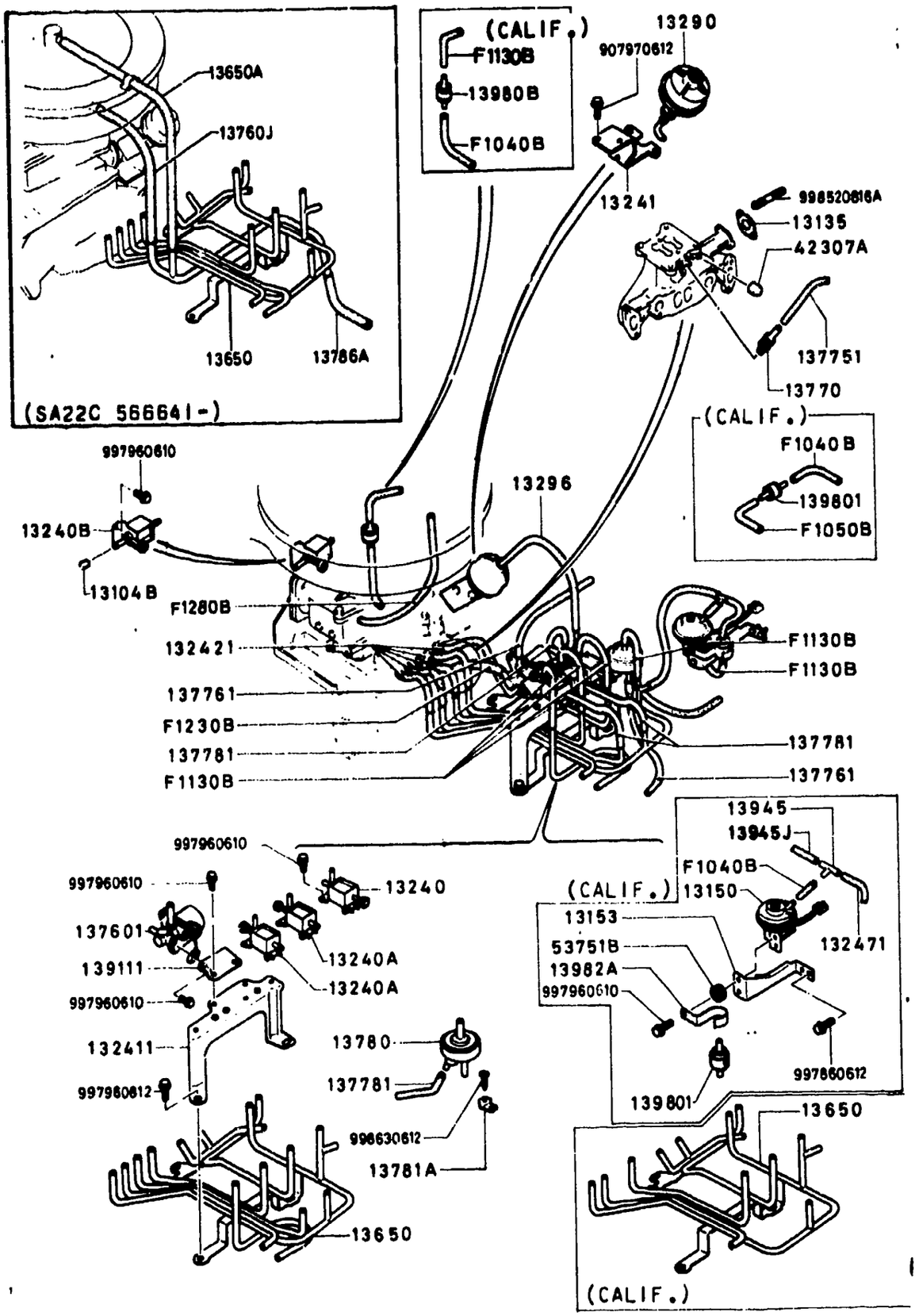

1380A-3■ EMISSION CONTROLS (EX.SIDE,M/T 1979 MODEL)

D-CODE (Key No.)	PART NAME	PART No.	Qty.	MODEL/DESCRIPTION	VIN (Chassis No.)
137751	HOSE,AIR CONDUITE D'AIR MANGUERA, AIRE	8871-13-775	1		
137761	HOSE,AIR CONDUITE D'AIR MANGUERA, AIRE	9935-10-8080	1	(ORD.BY 9935108999)	SA22C .. 566641-
		9935-10-8150	2	(ORD.BY 9935108999)	SA22C .. 500001 -566640
137781	TUBE,VACUUM RACCORD, CAPSULE A DEPRES TUBO,VACIO	9935-10-4075	3 4	(ORD.BY 9935104999) FED. ■ CANADA CALIF.	
13780	VALVE SOUPAPE	8871-13-780	1		
13781A	CLIP ATTACHE PRENSA TRABA GAZA	8871-13-781B	1		
13786A	HOSE,VENTILATION	9935-10-8080	1	(ORD.BY 9935108999)	SA22C .. 555094-
139111	BRACKET,E.C. VALVE ATTACHE, SOUPAPE E.C. SOPORTE,VALVULA E.C.	8871-13-911B	1		
13945	CONNECTOR,TUBE RACCORD, TUBE CONECTOR PARA TUBO	1700-13-945A	1	CALIF.	
13945J	TUBE,VACUUM	9935-10-4380	1	(ORD.BY 9935104999) CALIF.	
13980B	VALVE,DELAY SOUPAPE A RETARDEMENT	8866-13-980B	1	CALIF.	
139801	VALVE,DELAY SOUPAPE A RETARDEMENT	8712-13-980	2	CALIF.	
13982A	CLIP ATTACHE PRENSA TRABA GAZA	8868-13-982	1	CALIF.	
42307A	CAP BOUCHON TAPA	0223-42-307	1		
53751B	SEAT,RUBBER	0127-53-751	4	CALIF.	

1380AA EMISSION CONTROLS (EX. SIDE, A/T 1979 MODEL)

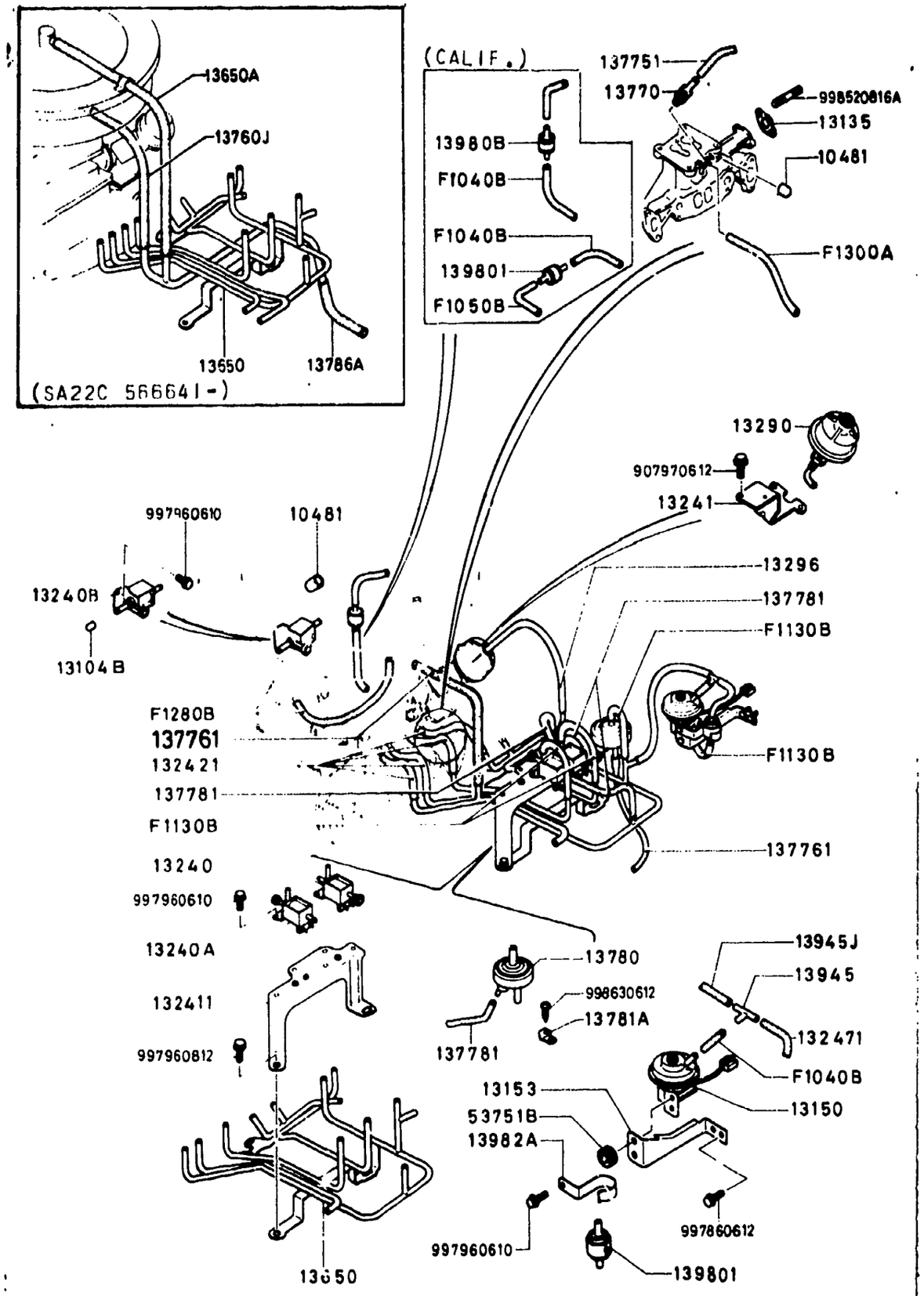

1380AA-1 EMISSION CONTROLS (EX.SIDE,A/T 1979 MODEL)

D-CODE (Key No.)	PART NAME	PART No.	Qty.	MODEL/ DESCRIPTION	VIN (Chassis No.)
F1040B	HOSE,FUEL FLEXIBLE ESSENCE	9935-10-4040	1 3	(ORD.BY 9935104999) FED. & CANADA CALIF.	
F1050B	HOSE,FUEL FLEXIBLE ESSENCE	9935-10-4060	1	(ORD.BY 9935104999) CALIF.	
F1130B	HOSE,FUEL FLEXIBLE ESSENCE	9935-10-4095	4	(ORD.BY 9935104999)	
F1280B	HOSE,VACUUM DURITE DE DEPRESSION	9935-10-8280	1	(ORD.BY 9935108999)	
F1300A	HOSE,VACUUM	9935-10-6280	1	(ORD.BY 9935106999)	SA22C .. 502999-
		9935-10-6300	1	(ORD.BY 9935106999)	SA22C .. 500001 -502998
10481	CAP BOUCHON	2306-10-481	2		
13104B	CAP BOUCHON TAPA	1010-13-104	1		
13135	GASKET JOINT EMPAQUE	8527-13-135A	1		
13150	SWITCH,VACUUM INTERRUPTEUR	8735-13-150	1		
13153	BRACKET SUPPORT SOPORTE	8868-13-151	1		SA22C .. 500001 -541729
		8868-13-151A	1		SA22C .. 541730-
13240	VALVE,3WAY SOUPAPE A TROIS VOIES	3597-13-240A	1		
13240A	VALVE,3WAY SOUPAPE A TROIS VOIES	8735-13-240A	1		
13240B	VALVE,3WAY SOUPAPE A TROIS VOIES	8553-13-240A	1		

1380AA EMISSION CONTROLS (EX. SIDE, A/T 1979 MODEL)

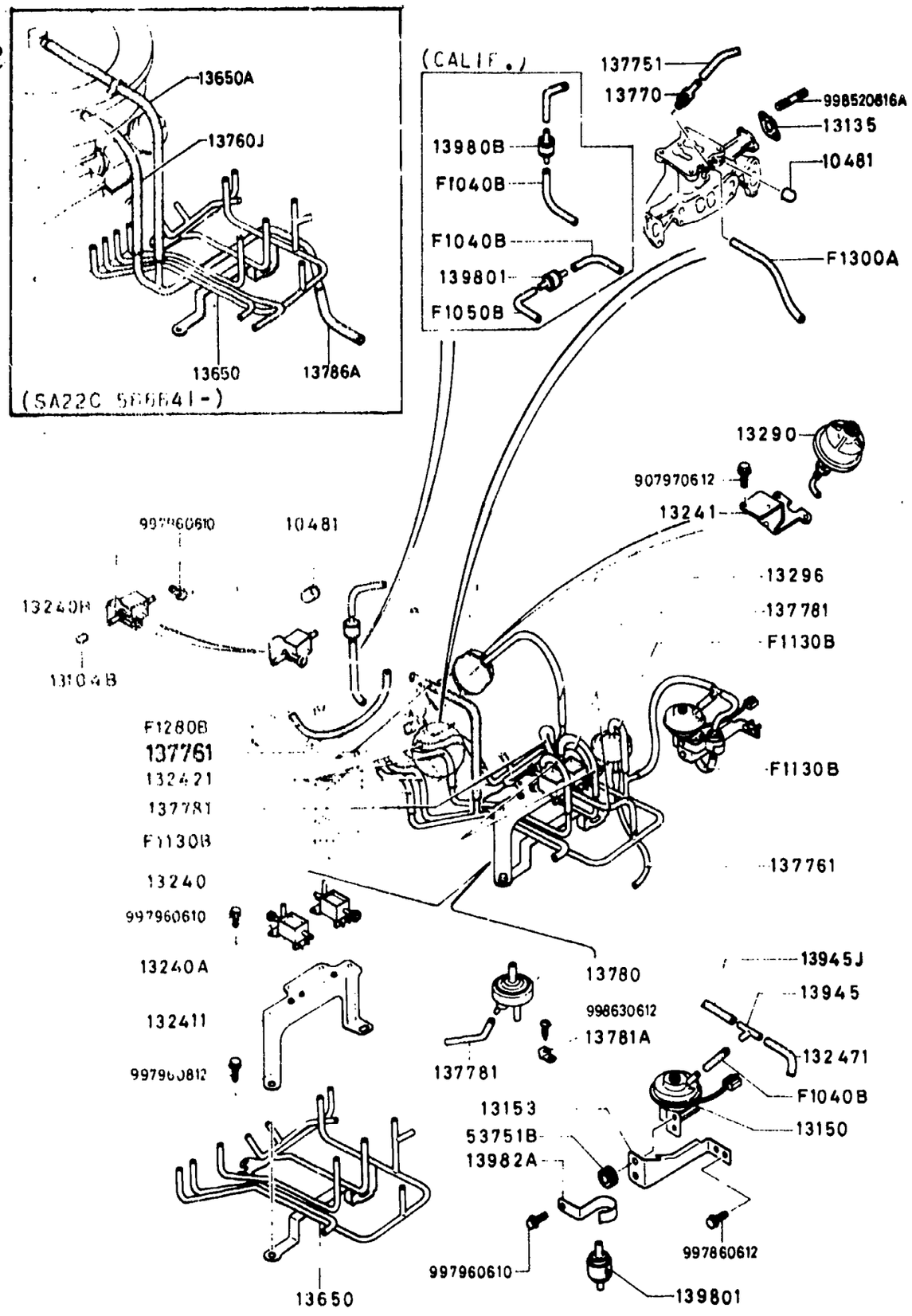

1380AA-2 EMISSION CONTROLS (EX.SIDE,A/T 1979 MODEL)

D-CODE (Key No.)	PART NAME	PART No.	Qty.	MODEL DESCRIPTION	VIN (Chassis No.)
13241	BRACKET,ACTUATOR SUPPORT	8871-13-291A	1		
132411	BRACKET ATTACHE SOPORTE	8871-13-241B	1		
132421	HOSE,VACUUM DURITE DE DEPRESSION	9935-10-4130	4	(ORD. BY 9935104999)	
132471	HOSE,VACUUM DURITE DE DEPRESSION	8871-13-247A	1		SA22C .. 500001 -536457
		9935-10-4075	1	(ORD.BY 9935104999)	SA22C .. 536458-
13290	ACTUATOR COMMANDE	3648-13-290	1		
13296	HOSE,AIR CONDUITE D'AIR	8871-13-296B	1		
13650	PIPE,VACUUM <C> CONDUIT A VIDE	8871-13-650F	1		SA22C .. 506641-
		8872-13-650B	1		SA22C .. 500001 -504153
	<A>	8872-13-650C	1		SA22C .. 504154 -506640
13650A	HOSE,AIR CONDUITE D,AIR MANGUERA,AIRE	9935-10-8370	1	(ORD.BY 9935108999)	SA22C .. 506641-
13760J	HOSE,AIR	9935-10-8120	1	(ORD.BY 9935108999)	SA22C .. 506641-
13770	COMPENSATOR,ALTITUDE COMPENSATEUR D'ALTITUDE	8761-13-770	1		
137751	HOSE,AIR CONDUITE D'AIR MANGUERA, AIRE	8871-13-775	1		
137761	HOSE,AIR CONDUITE D'AIR	9935-10-8080	1	(ORD.BY 9935108999)	SA22C ..

1380AA EMISSION CONTROLS (EX. SIDE, A/T 1979 MODEL)

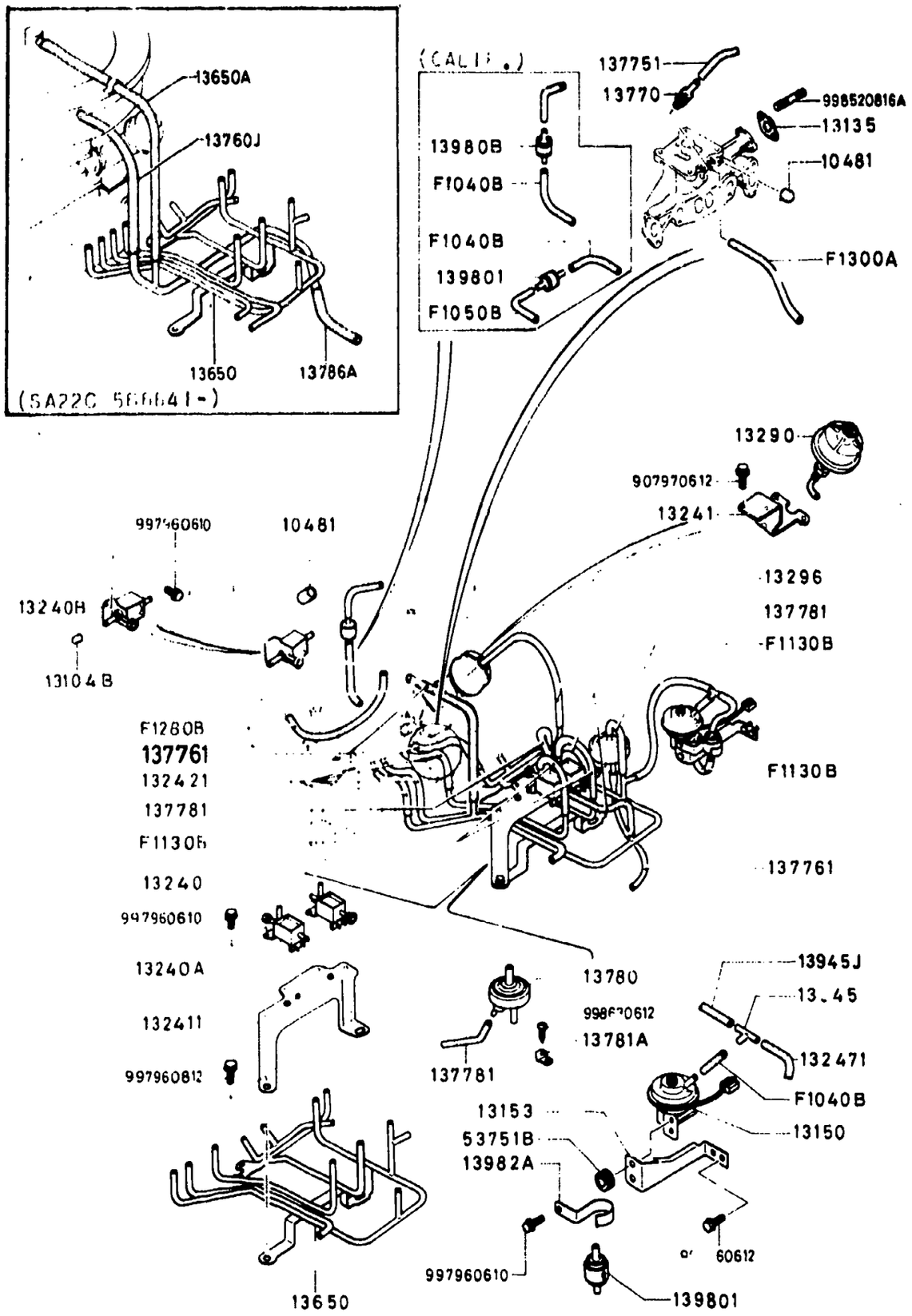

1380AA-3* EMISSION CONTROLS (EX.SIDE,A/T 1979 MODEL)

D-CODE (Key No.)	PART NAME	PART No.	Qty.	MODEL DESCRIPTION	VIN (Chassis No.)
137761 CONT'D	MANGUERA, AIRE	9935-10-8080			566641-
		9935-10-8150	2	(ORD.BY 9935108999)	SA22C .. 500001 -566640
137781	TUBE,VACUUM RACCORD, CAPSULE A DEPRES TUBO,VACIO	9935-10-4075	5	(ORD.BY 9935104999)	
13780	VALVE SOUPAPE	8871-13-780	1		
13781A	CLIP ATTACHE PRENSA TRABA GAZA	8871-13-781B	1		
13786A	HOSE,VENTILATION	9935-10-8080	1	(ORD.BY 9935108999)	SA22C .. 535094-
13945	CONNECTOR,TUBE RACCORD, TUBE CONECTOR PARA TUBO	1700-13-945A	1		
13945J	TUBE,VACUUM	9935-10-4380	1	(ORD.BY 9935104999)	
13980B	VALVE,DELAY SOUPAPE A RETARDEMENT	8868-13-980B	1	CALIF.	
139801	VALVE,DELAY SOUPAPE A RETARDEMENT	8712-13-980	1 2	FED. & CANADA CALIF.	
13982A	CLIP ATTACHE PRENSA TRABA GAZA	8868-13-982	1		
53751B	SEAT,RUBBER SIEGE, C.T.C. ASIENTO,GOMA	0127-53-751	4		

1380AB EMISSION CONTROLS (EX. SIDE, M/T 1980 MODEL)

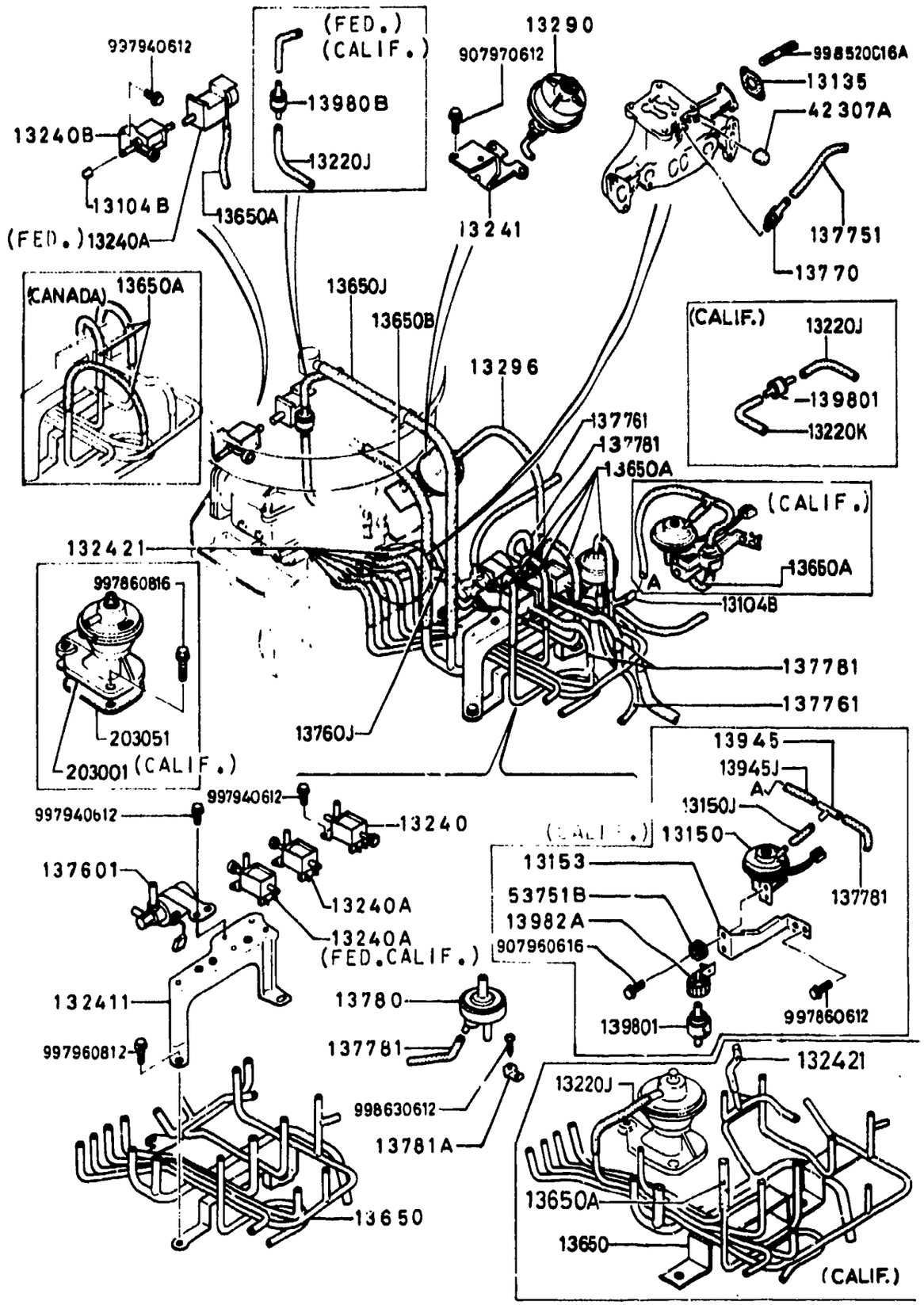

1380AB-1 EMISSION CONTROLS (EX.SIDE,M/T 1980 MODEL)

D-CODE (Key No.)	PART NAME	PART No.	Qty.	MODEL DESCRIPTION	VIN Chassis No.
13104B	CAP BOUCHON TAPA	1010-13-104	1 2	CALIF. FED. CANADA	
13135	GASKET JOINT EMPAQUE	8527-13-135A	1		
13150	SWITCH,VACUUM INTERRUPTEUR	8735-13-150	1	CALIF.	
13150J	TUBE,VACUUM TUBE,DEPRESSION TUBE,VACIO	9935-10-4040	 1	(ORD.BY 9935104999) CALIF.	
13153	BRACKET SUPPORT SOPORTE	8868-13-151A	1	CALIF.	
13220J	TUBE,VACUUM TUYAU D'EVAPORATION MANGUERA, EVAPORACION	9935-10-4040	 1 3	(ORD.BY 9935104999) FED. CALIF.	
13220K	TUBE,VACUUM TUBE,DEPRESSION TUBO,VACIO	9935-10-4060	 1	(ORD.BY 9935104999) CALIF.	
13240	VALVE,3WAY SOUPAPE A TROIS VOIES	3597-13-240A	1 2	FED. CANADA CALIF.	
13240A	VALVE,3WAY SOUPAPE A TROIS VOIES	8735-13-240A	1 2 3	CANADA CALIF. FED.	
13240B	VALVE,3WAY SOUPAPE A TROIS VOIES	8553-13-240A	1		
13241	BRACKET,ACTUATOR SUPPORT	8871-13-291A	1		
132411	BRACKET ATTACHE SOPORTE	8341-13-241	1	FED. CANADA	

SECTION NUMBER INDEX (ENGINE)

STARTING LOCATION	SECTION No.	SECTION NAME
1–C2	1000A	SHORT ENGINE & GASKET SET
1–D2	1030A	ROTOR HOUSING
1–G2	1040A	HOUSING (FRONT & REAR)
1–C3	1100A	ECCENTRIC SHAFT & FLYWHEEL
1–F3	1110A	ROTOR
1–C4	1300A	IN. MANIFOLD
1–D4	1310A	THERMAL REACTOR
1–E4	1320A	FUEL SYSTEM
1–G4	1330A	AIR CLEANER
1–H4	1350A	STARTING ASSIST SYSTEM
1–J4	1360A	CARBURETOR
1–F6	1371A	EMISSION CONTROLS (AIR PUMP & CONTROL VALVE)
1–H6	1380A	EMISSION CONTROLS (EX. SIDE)
1–C8	1400A	OIL PUMP & FILTER
1–F8	1500A	COOLING SYSTEM
1–K8	1600A	CLUTCH (MANUAL)
1–C9	1700A	T/MISSION CASE (MANUAL)
1–G9	1710A	T/MISSION GEAR (MANUAL)
1–E10	1720A	CHANGE CONTROLS (MANUAL)
1–C11	1800A	ELECTRICAL SYSTEM (ENGINE)
1–H11	1820A	DISTRIBUTOR

STARTING LOCATION	SECTION No.	SECTION NAME
1–L11	1330A	ALTERNATOR
1–D12	1840A	STARTER
1–H12	1850A	BATTERY & CABLES
1–C13	1910A	CONVERTER, OIL PUMP & PIPING (AUTOMATIC T/MISSION)
–F13	1920A	CASE & MAIN CONTROLS (AUTOMATIC T/MISSION)
1–K13	1930A	CLUTCH & PLANETARY GEAR (AUTOMATIC T/MISSION)
1–D14	1940A	LOW, REVERSE & GOVERNOR (AUTOMATIC T/MISSION)
1–G14	1950A	MANUAL LINKAGE (AUTOMATIC T/MISSION)

THE FRAMES IN THIS COLUMN INDICATE :

1–N6	1380AB	EMISSION CONTROLS (EX. SIDE, M/T 1980 MODEL)
1–E7	1380AC	EMISSION CONTROLS (EX. SIDE, A/T 1980 MODEL)

© 1983 Toyo Kogyo Co., Ltd.
MAY 1983

1380AB EMISSION CONTROLS (EX. SIDE, M/T 1980 MODEL)

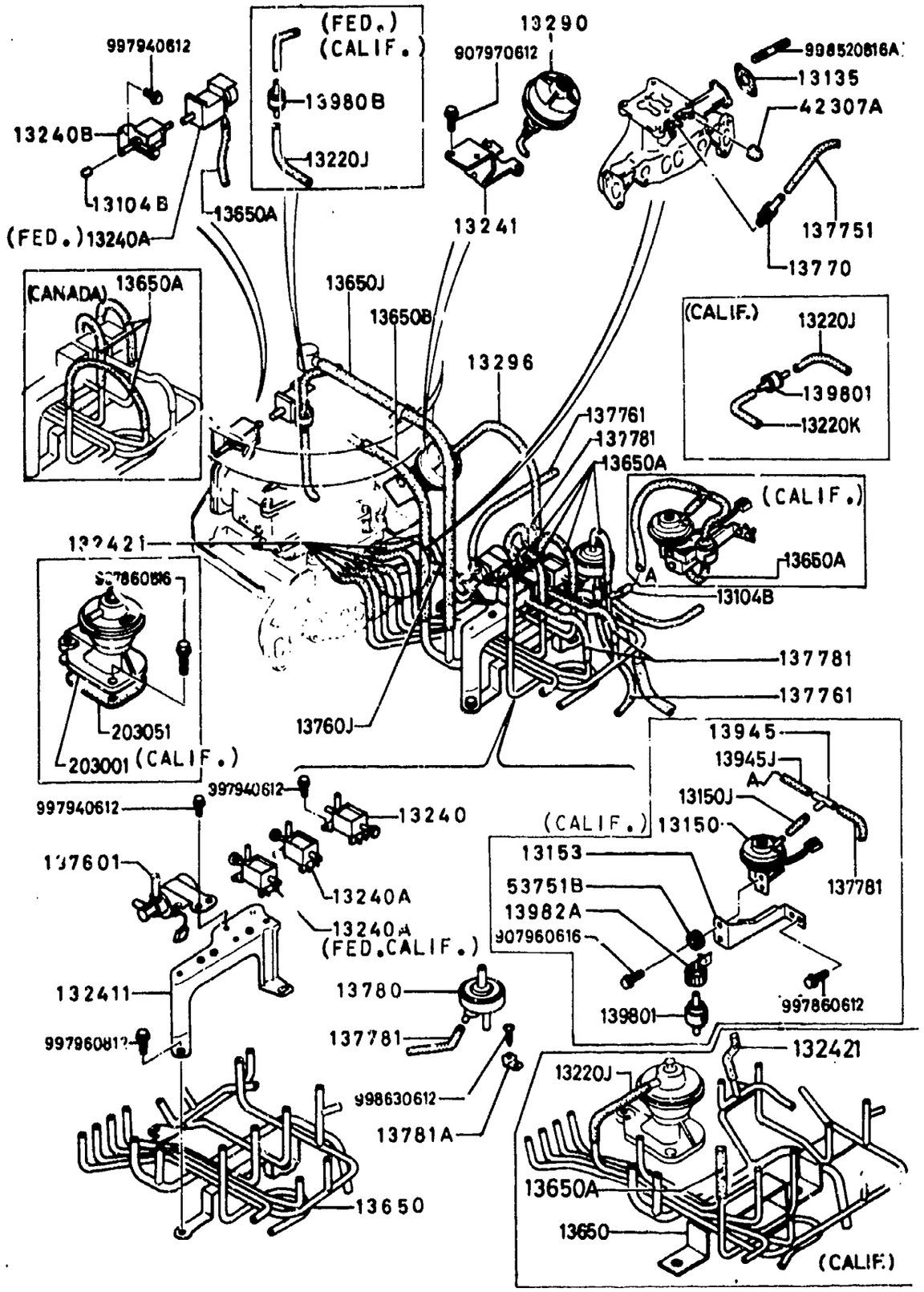

1380AB-2 EMISSION CONTROLS (EX.SIDE,M/T 1980 MODEL)

D-CODE (Key No.)	PART NAME	PART No.	Qty.	MODEL/DESCRIPTION	VIN (Chassis No.)
132411 CONT'D		8344-13-241	1	CALIF.	
132421	HOSE,VACUUM DURITE DE DEPRESSION	9935-10-4130	5 6	(ORD. BY 9935104999) FED. CALIF. CANADA	
13290	ACTUATOR COMMANDE	3648-13-290	1		
13296	HOSE,AIR CONDUITE D'AIR	8871-13-296B	1		
13650	PIPE,VACUUM CONDUIT A VIDE	8341-13-650A	1	FED. CANADA	
		8344-13-650B	1	CALIF.	SA22C .. 568501 -588206
	<A>	8344-13-650C	1	CALIF.	SA22C .. 588207-
13650A	HOSE,AIR CONDUITE D,AIR MANGUERA,AIRE	9935-10-4095	3 5 6	(ORD.BY 9935104999) CANADA FED. CALIF.	
13650B	HOSE,AIR	9935-10-8120	1	(ORD.BY 9935108999)	
13650J	HOSE,AIR CONDUITE D,AIR MANGUERA,AIRE	9935-10-8370	1	(ORD.BY 9935108999)	
13760J	HOSE,AIR	9935-10-8150	1	(ORD.BY 9935108999)	
137601	VALVE,COASTING,NO.2 SOUPAPE	8341-13-760A	1		
13770	COMPENSATOR,ALTITUDE COMPE SATEUR D'ALTITUDE	8761-13-770	1		
137751	HOSE,AIR CONDUITE D'AIR MANGUERA, AIRE	8871-13-775	1		
137761	HOSE,AIR CONDUITE D'AIR MANGUERA, AIRE	9935-10-8120	1	(ORD.BY 9935108999)	

1380AB EMISSION CONTROLS (EX. SIDE, M/T 1980 MODEL)

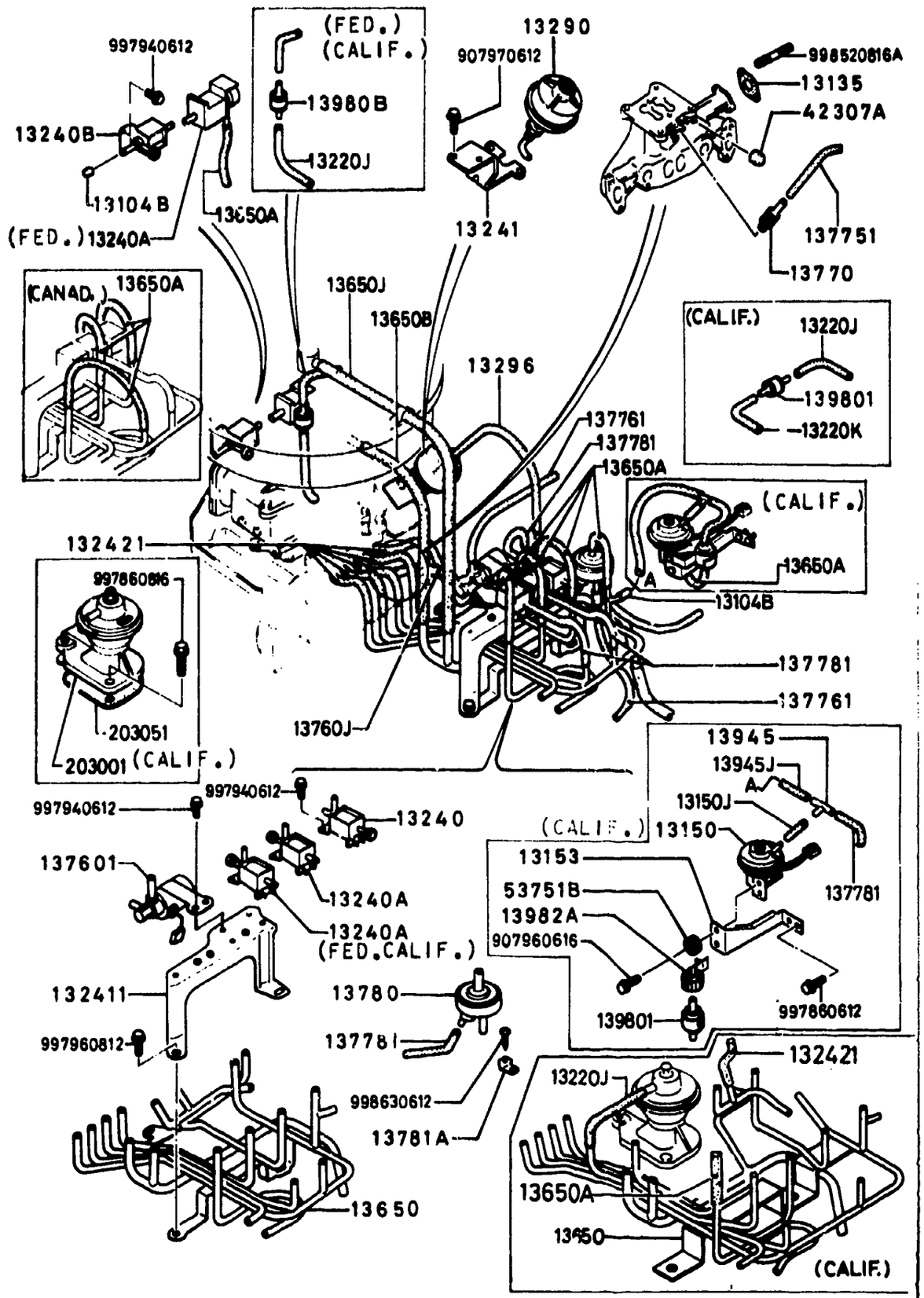

1380AB-3* EMISSION CONTROLS (EX.SIDE,M/T 1980 MODEL)

D-CODE (Key No.)	PART NAME	PART No.	Qty.	MODEL DESCRIPTION	VIN (Chass No)
137781	TUBE,VACUUM RACCORD, CAPSULE A DEPRES TUBO,VACIO	9935-10-4075	 3 4 5	(ORD.BY 9935104999) CANADA FED. CALIF.	
13780	VALVE SOUPAPE	8871-13-780	1		
13781A	CLIP ATTACHE PRENSA TRABA GAZA	8871-13-781B	1		
13945	CONNECTOR,TUBE RACCORD, TUBE CONECTOR PARA TUBO	1700-13-945A	1	CALIF.	
13945J	TUBE,VACUUM	9935-10-4380	 1	(ORD.BY 9935104999) CALIF.	
13980B	VALVE,DELAY SOUPAPE A RETARDEMENT	8868-13-980B	1	FED. CALIF.	
139801	VALVE,DELAY SOUPAPE A RETARDEMENT	8712-13-980	2	CALIF.	
13982A	CLIP ATTACHE PRENSA TRABA GAZA	9928-91-353	1	CALIF.	
203001	VALVE,E.G.R. SOUPAPE E.G.R.	8344-13-950	1	CALIF.	
203051	GASKET,E.G.R.VALVE JOINT DE SOUPAPE E.G.R.	8503-13-951	1	CALIF.	
42307A	CAP BOUCHON TAPA	0223-42-307	1		
53751B	SEAT,RUBBER SIEGE, C.T.C. ASIENTO,GOMA	0127-53-751	4	CALIF.	

1380AC EMISSION CONTROLS (EX. SIDE, A/T 1980 MODEL)

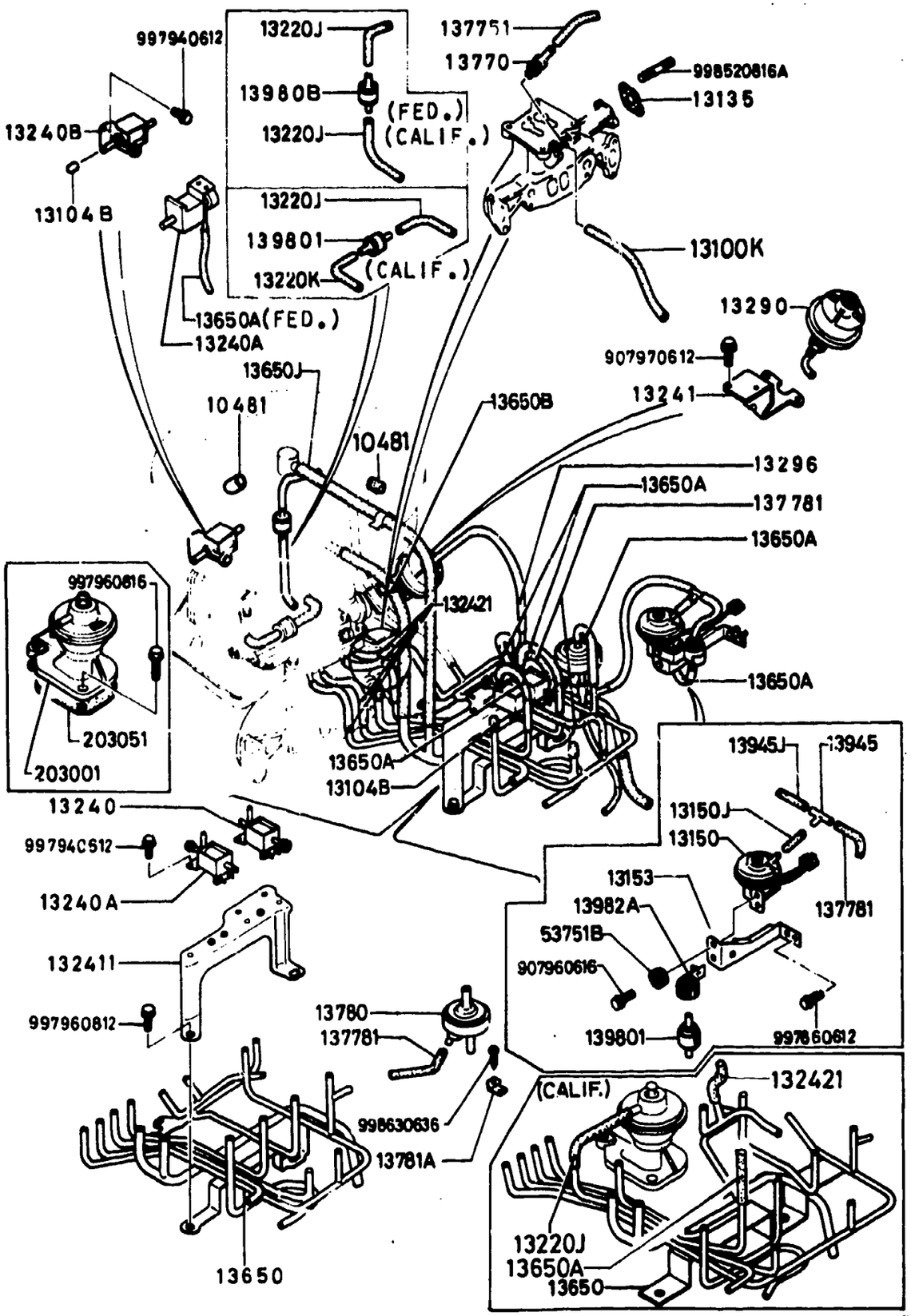

1380AC-1 EMISSION CONTROLS (EX.SIDE,A/T 1980 MODEL)

D-CODE (Key No.)	PART NAME	PART No.	Qty.	MODEL DESCRIPTION	VIN (Chassis No.)
10481	CAP BOUCHON	2306-10-481	2		
13100K	HOSE,VACUUM TUYAU A VIDE MANGUERA, VACIO	9935-10-6280	1		
13104B	CAP BOUCHON TAPA	1010-13-104	5		
13135	GASKET JOINT EMPAQUE	8527-13-135A	1		
13150	SWITCH,VACUUM INTERRUPTEUR	8735-13-150	1		
13150J	TUBE,VACUUM TUBE,DEPRESSION TUBE,VACIO	9935-10-4040	1	(ORD.BY 9935104999)	
13153	BRACKET SUPPORT SOPORTE	8868-13-151A	1		
13220J	TUBE,VACUUM TUYAU D'EVAPORATION MANGUERA, EVAPORACION	9935-10-4040	1 3	(ORD.BY 9935104999) FED. CALIF.	
13220K	TUBE,VACUUM TUBE,DEPRESSION TUBO,VACIO	9935-10-4060	1	(ORD.BY 9935104999) CALIF.	
13240	VALVE,3WAY SOUPAPE A TROIS VOIES	3597-13-240A	1 2	FED. CANADA CALIF.	
13240A	VALVE,3WAY SOUPAPE A TROIS VOIES	8735-13-240A	1 2	CALIF. CANADA FED.	
13240B	VALVE,3WAY SOUPAPE A TROIS VOIES	8553-13-240A	1		

1380AC EMISSION CONTROLS (EX. SIDE, A/T 1980 MODEL)

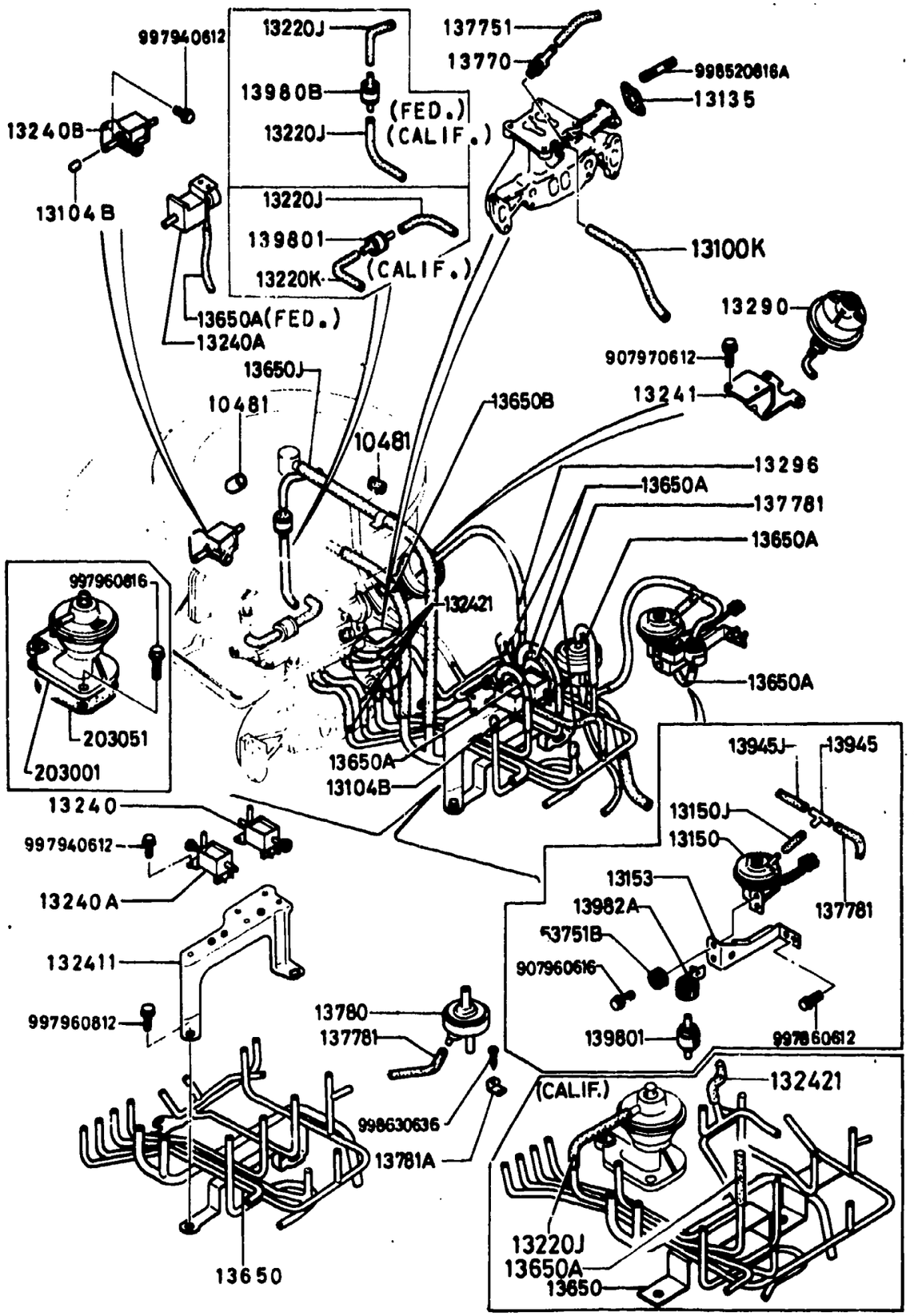

D-CODE (Key No.)	PART NAME	PART No.	Qty.	MODEL DESCRIPTION	VIN (Chassis No.)
13241	BRACKET,ACTUATOR SUPPORT	8871-13-291A	1		
132411	BRACKET ATTACHE SOPORTE	8341-13-241	1	FED. CANADA	
		8344-13-241	1	CALIF.	
132421	HOSE,VACUUM DURITE DE DEPRESSION	9935-10-4130	4	(ORD. BY 9935104999) FED. CANADA	
			5	CALIF.	
13290	ACTUATOR COMMANDE	3648-13-290	1		
13296	HOSE,AIR CONDUITE D'AIR	8871-13-296B	1		
13650	PIPE,VACUUM CONDUIT A VIDE	8341-13-650A	1	FED. CANADA	
		8344-13-650B	1	CALIF.	SA22C .. 568501 -588206
	<A>	8344-13-650C	1	CALIF.	SA22C .. 588207-
13650A	HOSE,AIR CONDUITE D,AIR MANGUERA,AIRE	9935-10-4095	4	(ORD.BY 9935104999) CANADA FED.	
			5	CALIF.	
13650B	HOSE,AIR	9935-10-8120	1	(ORD.BY 9935108999)	
13650J	HOSE,AIR CONDUITE D,AIR MANGUERA,AIRE	9935-10-8370	1	(ORD.BY 9935108999)	
13770	COMPENSATOR,ALTITUDE COMPENSATEUR D'ALTITUDE	8761-13-770	1		
137751	HOSE,AIR CONDUITE D'AIR MANGUERA, AIRE	8871-13-775	1		
137781	TUBE,VACUUM RACCORD, CAPSULE A DEPRES TUBO,VACIO	9935-10-4075	3	(ORD.BY 9935104999) FED. CANADA	

1380AC EMISSION CONTROLS (EX. SIDE, A/T 1980 MODEL)

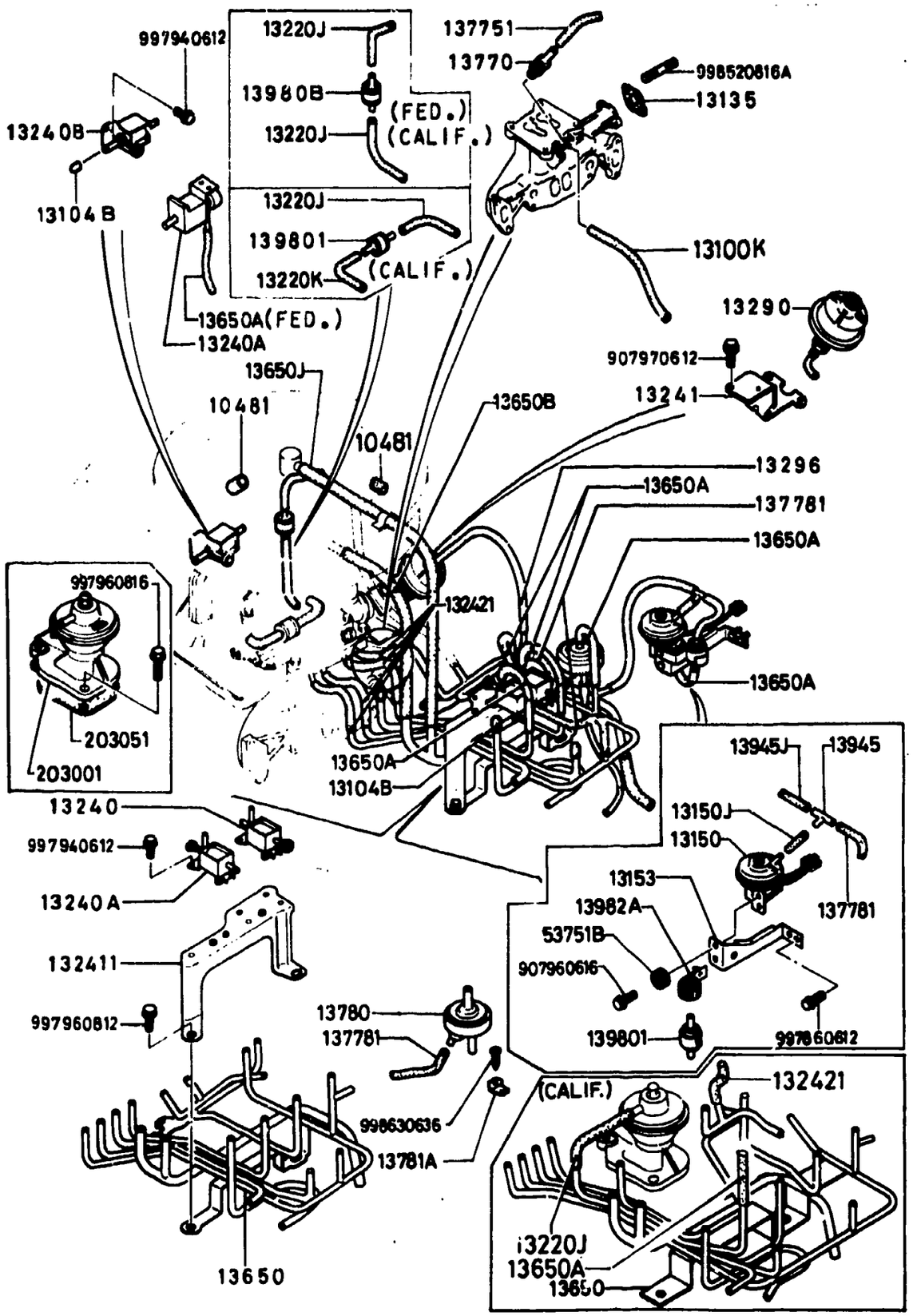

1380AC-3* EMISSION CONTROLS (EX.SIDE,A/T 1980 MODEL)

D-CODE (Key No.)	PART NAME	PART No.	Qty.	MODEL DESCRIPTION	VIN (Chassis No.)
137781 CONT'D		9935-10-4075	4	CALIF.	
13780	VALVE SOUPAPE	8871-13-780	1		
13781A	CLIP ATTACHE PRENSA TRABA GAZA	8871-13-781B	1		
13945	CONNECTOR,TUBE RACCORD, TUBE CONECTOR PARA TUBO	1700-13-945A	1		
13945J	TUBE,VACUUM	9935-10-4380	1	(ORD.BY 9935104999)	
13980B	VALVE,DELAY SOUPAPE A RETARDEMENT	8868-13-980B	1	FED. & CALIF.	
139801	VALVE,DELAY SOUPAPE A RETARDEMENT	8712-13-980	1 2	FED. CANADA CALIF.	
13982A	CLIP ATTACHE PRENSA TRABA GAZA	9928-91-353	1		
203001	VALVE,E.G.R. SOUPAPE E.G.R.	8344-13-950	1	CALIF.	
203051	GASKET,E.G.R.VALVE JOINT DE SOUPAPE E.G.R.	8503-13-951	1	CALIF.	
53751B	SEAT,RUBBER SIEGE, C.T.C. ASIENTO,GOMA	0127-53-751	4		

SECTION NUMBER INDEX (ENGINE)

STARTING LOCATION	SECTION No.	SECTION NAME
1–C2	1000A	SHORT ENGINE & GASKET SET
1–D2	1030A	ROTOR HOUSING
1–G2	1040A	HOUSING (FRONT & REAR)
1–C3	1100A	ECCENTRIC SHAFT & FLYWHEEL
1–F3	1110A	ROTOR
1–C4	1300A	IN. MANIFOLD
1–D4	1310A	THERMAL REACTOR
1–E4	1320A	FUEL SYSTEM
1–G4	1330A	AIR CLEANER
1–H4	1350A	STARTING ASSIST SYSTEM
1–I4	1360A	CARBURETOR
1–F6	1371A	EMISSION CONTROLS (AIR PUMP & CONTROL VALVE)
1–H6	1380A	EMISSION CONTROLS (EX. SIDE)
1–C8	1400A	OIL PUMP & FILTER
1–F8	1500A	COOLING SYSTEM
1–K8	1600A	CLUTCH (MANUAL)
1–C9	1700A	T/MISSION CASE (MANUAL)
1–G9	1710A	T/MISSION GEAR (MANUAL)
1–E10	1720A	CHANGE CONTROLS (MANUAL)
1–C11	1800A	ELECTRICAL SYSTEM (ENGINE)
1–H11	1820A	DISTRIBUTOR
1–L11	1830A	ALTERNATOR
1–D12	1840A	STARTER
1–H12	1850A	BATTERY & CABLES
1–C13	1910A	CONVERTER, OIL PUMP & PIPING (AUTOMATIC T/MISSION)
1–F13	1920A	CASE & MAIN CONTROLS (AUTOMATIC T/MISSION)
1–K13	1930A	CLUTCH & PLANETARY GEAR (AUTOMATIC T/MISSION)
1–D14	1940A	LOW, REVERSE & GOVERNOR (AUTOMATIC T/MISSION)
1–G14	1950A	MANUAL LINKAGE (AUTOMATIC T/MISSION)

THE FRAMES IN THIS COLUMN INDICATE :

1–C8	1400A	OIL PUMP & FILTER
1–F8	1500A	COOLING SYSTEM
1–K8	1600A	CLUTCH (MANUAL)

© 1983 Toyo Kogyo Co., Ltd.
MAY 1983

1400A OIL PUMP & FILTER

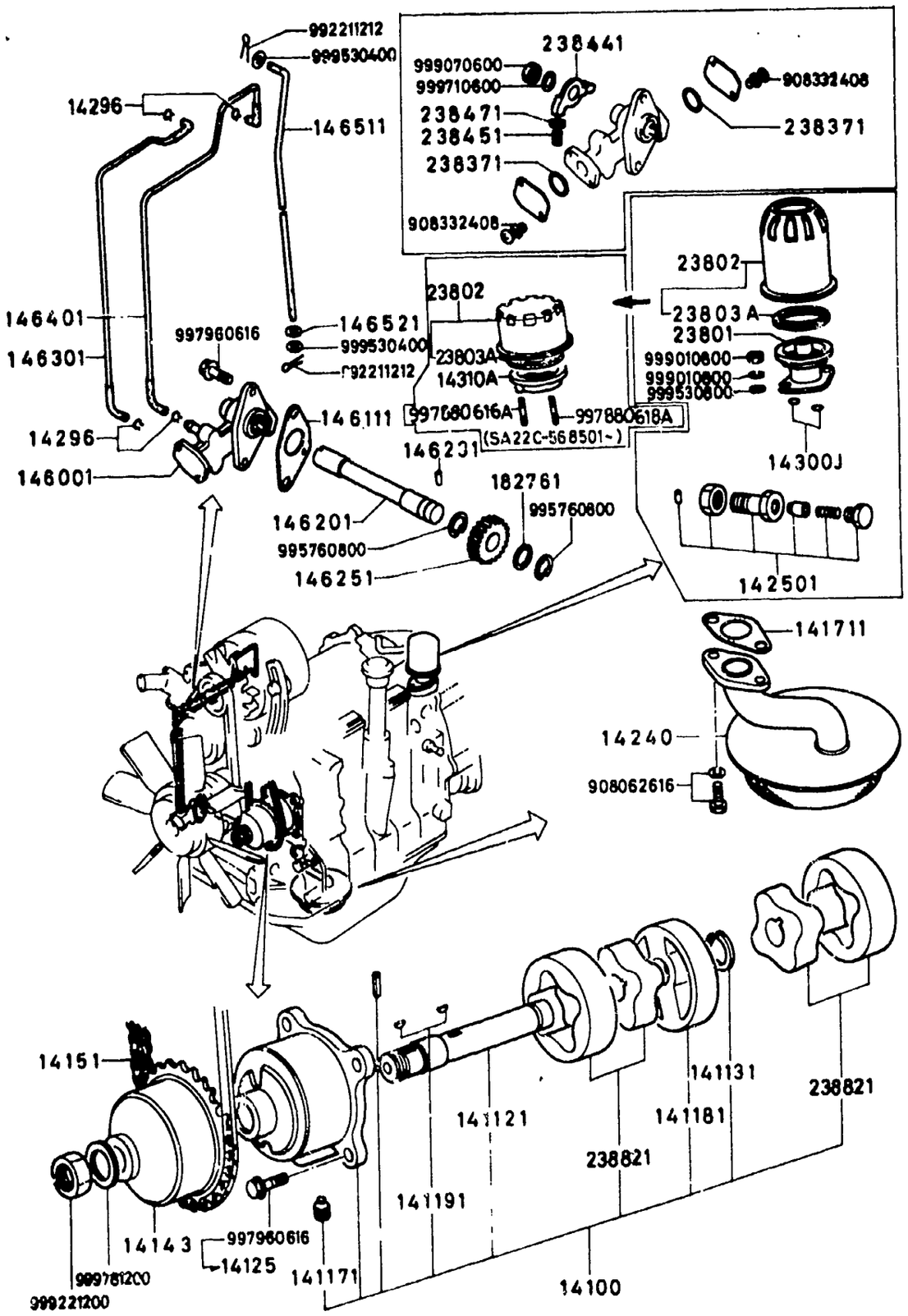

1400A-1 OIL PUMP & FILTER

D-CODE (Key No.)	PART NAME	PART No.	Qty.	MODEL/DESCRIPTION	VIN (Chassis No.)
14100	PUMP,OIL POMPE A HUILE BOMBA ACEITE	8501-14-100	1		
141121	SHAFT,OIL PUMP AXE, POMPE A HUILE EJE,BOMBA ACEITE	1757-14-112	1		
141131	RING,SNAP CALE ANILLO,SEGURO	0810-14-113	1		
141171	BOLT,LOCK BOULON DE FIXATION PERNO,SEGURO	0839-14-117	1		
141181	PLATE,MIDDLE PLATEAU CENTRAL PLATO - MEDIO	8501-14-118	1		
141191	KEY CLEF LLAVE	0839-14-119B	2		
14125	BOLT,SET	8553-14-125	4		
14143	WHEEL,SPROCKET PIGNON RUEDA,RODILLO	0839-14-141A	1		
14151	CHAIN,OIL PUMP CHAINE, POMPE A HUILE CADENA PARA LA BOMBA DE A	0839-14-142	1		
141711	GASKET,OIL STRAINER JOINT-TAMIS HUILE	0810-14-171	1		
14240	STRAINER,OIL TAMIS D'HUILE CEDAZO,ACEITE	8871-14-160	1		
142501	REGULATOR,PRESSURE REGULATEUR DE PRESSION PEGULADOR,PERSION	3648-14-250	1		
14296	CLIP,OIL TUBE ATTACHE,CONDUIT D'HUILE PRENSA PARA TUBO DEL ACEI	0730-14-296	4		
14300J	RING,'O' JOINT 'O' SELLO DE GOMA 'O'	9954-10-1601	2		
14310A	BODY,OIL FILTER	8341-14-310	1	80 MODEL	SA22C .. 568501-

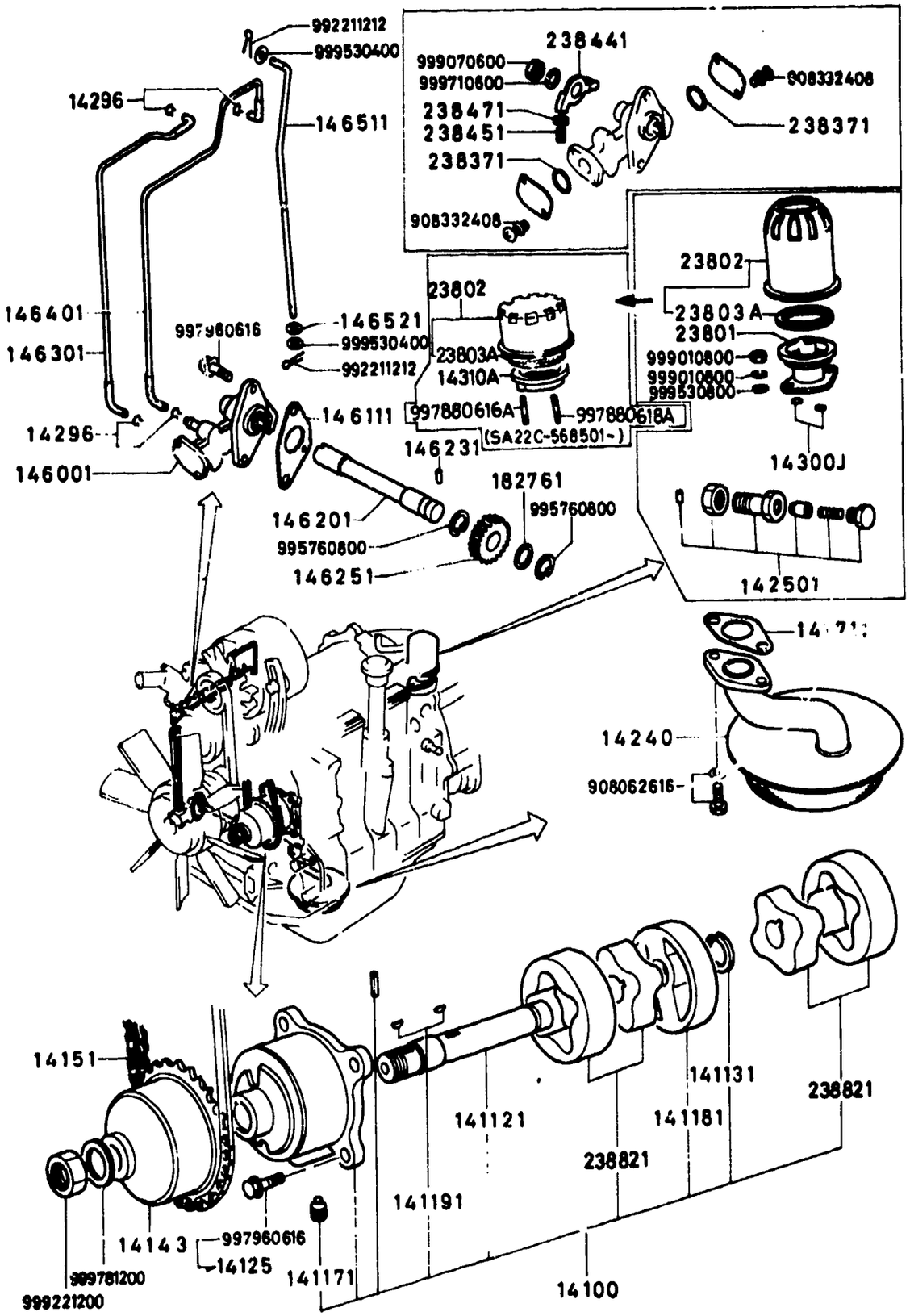

D-CODE (Key No.)	PART NAME	PART No.	Qty.	MODEL DESCRIPTION	VIN (Chassis No.)
146001	PUMP,METERING OIL POMPE, DEBIT HUILE BOMBA - REGULADO ACEITE	1757-14-600	1		
146111	GASKET,METERING OIL JOINT COMPTEUR D'HUILE	1757-14-611	1		
146201	SHAFT,DRIVEN GEAR AXE, PIGNON ENTRAIN EJE,ENGRANAJE TRANSMISOR	0820-14-620A	1		
146231	PIN,DRIVEN GEAR CALE DU PIGNON D'ENTRAINE EJE, PINON LOCO	0813-14-623	1		
146251	GEAR,DRIVEN PIGNON D'ENTRAINEMENT ENGRANAJE, IMPULSADOR	0820-14-625A	1		
146301	TUBE,METERING OIL TUYAU D'HUILE TUBO,DOSIFIC.ACEITE	8871-14-660	1		SA22C .. 500001 -500400
	<A>	8871-14-660A	1		SA22C .. 500401-
146401	TUBE,METERING OIL TUYAU D'HUILE TUBO,DOSIFIC.ACEITE	8871-14-670	1		SA22C .. 500001 -500400
	<A>	8871-14-670A	1		SA22C .. 500401-
146511	ROD,CONNECTING BIELLE BIELA	8871-14-651	1		
146521	SHIM,ADJUST EPAISSEUR LAINA,AJUSTE	1757-14-652	1	(T=1.0)	
		1757-14-653	1	(T=2.0)	SA22C .. 500001 -566640
182761	SHIM,ADJUST EPAISSEUR LAINA,AJUSTE	0810-18-276	2	(T=0.6)	SA22C .. 500001 -523093
		0810-18-277	2	(T=0.3)	SA22C .. 500001 -523093
23801	COVER	0839-23-801	1	79 MODEL	SA22C ..

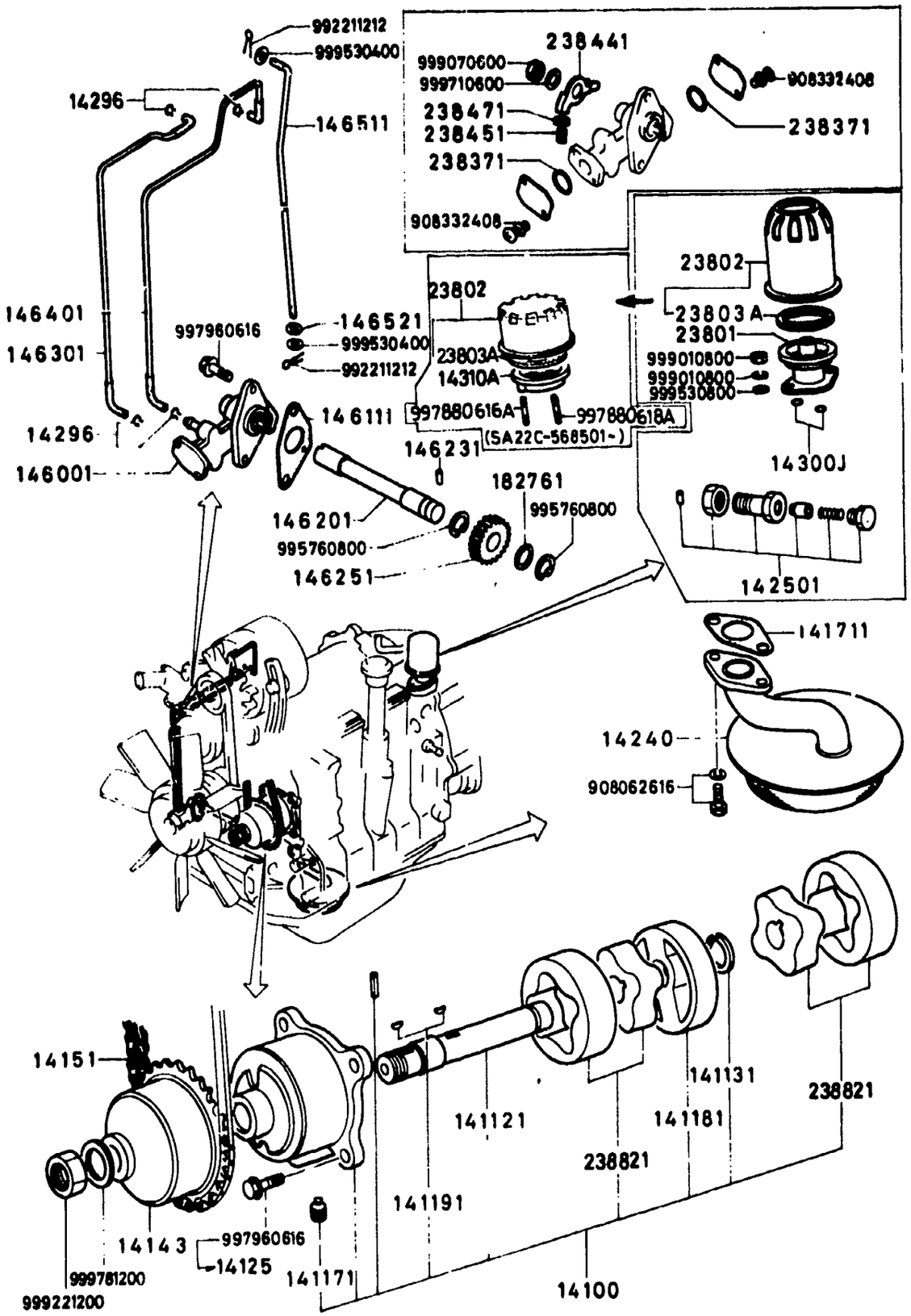

1400A-3* OIL PUMP & FILTER

D-CODE (Key No.)	PART NAME	PART No.	Qty.	MODEL DESCRIPTION	VIN (Chassis No.)
23801 CONT'D	CACHE COBERTOR	0839-23-801			500001 -568500
23802	CARTRIDGE,OIL FILTER ELEMENT, FILTRE A HUILE CARTUCHO FILTRO PARA ACEI	0370-23-802	1	80 MODEL	SA22C .. 568501-
		0866-23-802	1	79 MODEL	SA22C .. 500001 -568500
23803A	GASKET JOINT EMPAQUE	0813-23-803	1		
238371	RING,'O' JOINT 'O' SELLO DE GOMA 'O'	0730-23-837	2		
238441	LEVER,CONTROL LEVIER DE CONTROLE PALANCA DE CONTROL	1757-23-844	1		
238451	SCREW,ADJUST VIS DE REGLAGE TORNILLO,AJUSTE	0820-23-845A	1		
238471	NUT ECROU TUERCA	0820-23-847A	1		
238821	ROTOR SET,OIL PUMP JEU DE ROTOR,POMPE A HUIL JGO.DE ROTOR,BOMBA ACEITE	8501-14-110	2		

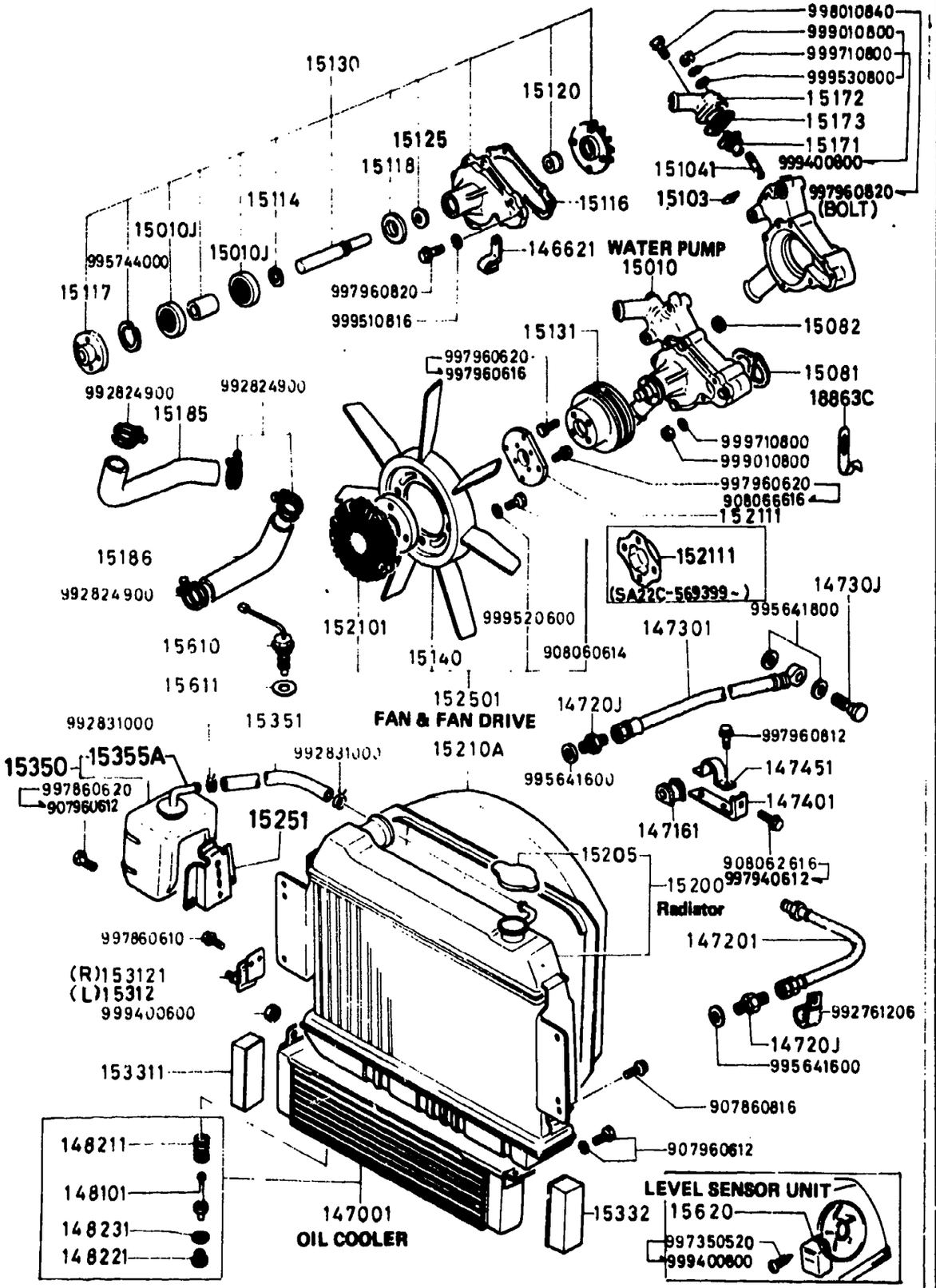

1500A-1 COOLING SYSTEM

D·CODE (Key No.)	PART NAME	PART No.	Qty.	MODEL DESCRIPTION	VIN (Chassis No.)
146621	CLIP ATTACHE PRENSA TRABA GAZA	3565-14-662A	1		
147001	COOLER,OIL RADIATEUR D'HUILE EMFRIADOR DE ACEITE	8871-14-700	1		
147161	PROTECTOR,OIL HOSE PROTECTEUR, DURITE HUILE PROTECTOR MANGUERA ACEITE	0813-14-716	1		
14720J	JOINT,UNION RACCORD	9938-41-200F	2		
147201	HOSE,OIL FLEXIB.D'HUILE MANGUERA, ACEITE	1011-14-720	1		
14730J	CONNECTOR RACCORD CONECTOR	9938-11-400	1		
147301	HOSE,OIL FLEXIB.D'HUILE MANGUERA, ACEITE	8871-14-730	1		
147401	BRACKET,OIL HOSE ATTACHE, DURITE HUILE SOPORTE,MANGUERA DE ACEIT	8871-14-742	1		
147451	CLIP,AIR HOSE ATTACHE, DURITE D'AIR GAZA PARA MANGUERA DE AIR	0839-14-745	1		
148101	PELLET,THERMO	8871-14-810	1		
148211	SPRING,PELLET RESSORT	1757-14-821	1		
148221	NUT,STOPPER ECROU	1757-14-822	1		
148231	GASKET JOINT EMPAQUE	1757-14-823	1		
15010	PUMP,WATER POMPE A EAU BOMBA DE AGUA	8553-15-010F	1		SA22C .. 500001 -566640
		8872-15-010	1		SA22C .. 566641

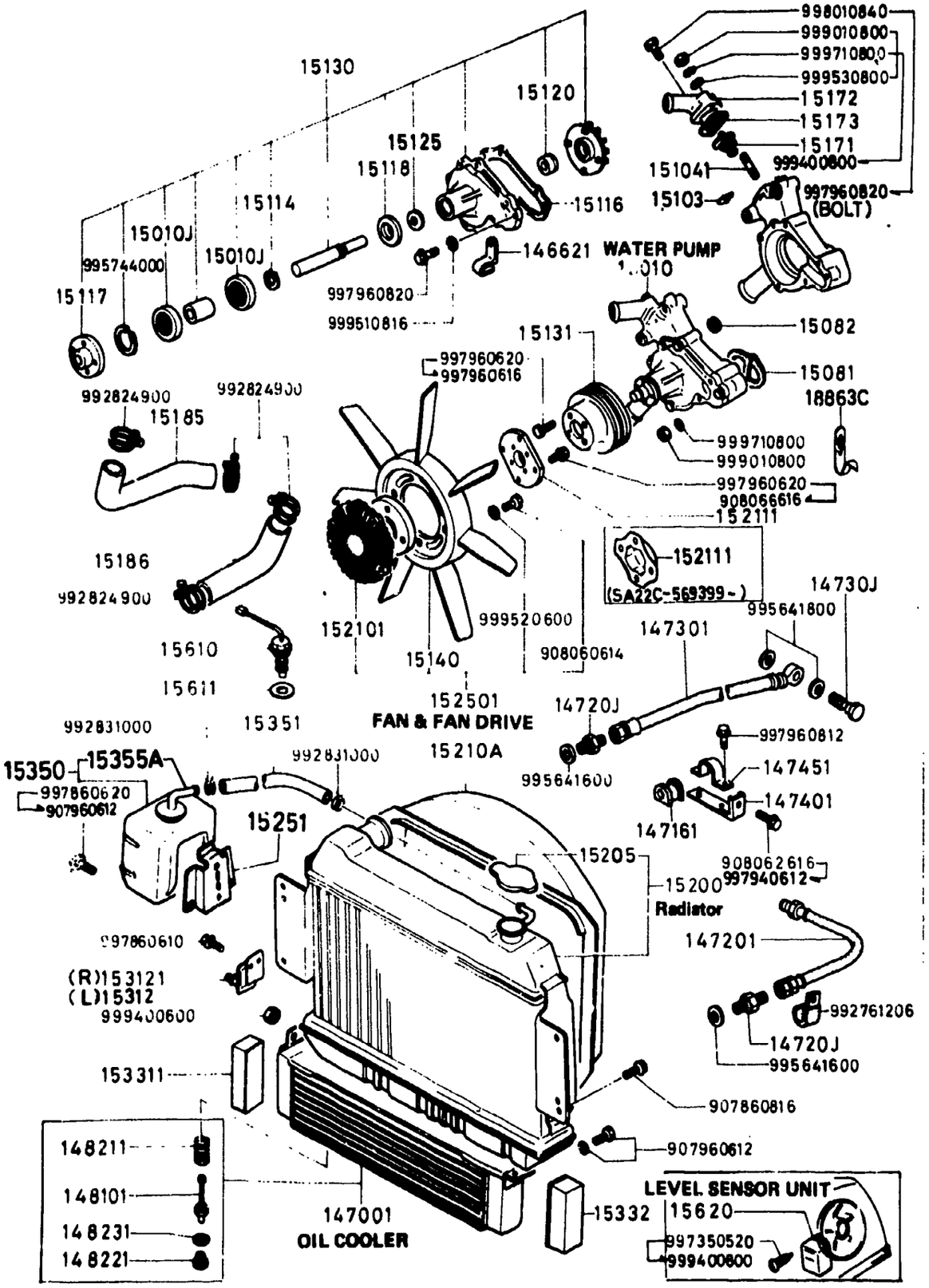

1500A-2 COOLING SYSTEM

D-CODE (Key No.)	PART NAME	PART No.	Qty.	MODEL DESCRIPTION	VIN (Chassis No.)
15010 CONT'D		8872-15-010			-597272
	<A >	8872-15-010A	1		SA22C .. 597273 -615691
	<A >	*8872-15-010B	1		SA22C .. 615692-
15010J	BEARING,BALL ROULEMENT A BILLES RODAMIENTO DE BOLAS	8871-15-121A	2		
15081	GASKET JOINT EMPAQUE	1757-15-105A	1		
15082	GASKET JOINT EMPAQUE	1757-15-106	2		
15103	SPACER	8872-15-103	1		
151041	STUD,COVER GOUJON DE CACHE PRISIONERO,CUBIERTA	2090-15-104	1		SA22C .. 500001 -566640
		8872-15-104	1		SA22C .. 566641-
15114	RING,SNAP CALE ANILLO,SEGURO	1757-15-114	1		
15116	GASKET,WATER PUMP JOINT POMPE A EAU	1757-15-132	1		
15117	BOSS,W.PUMP PULLEY FLASQUE POMPE A EAU	1757-15-152B	1		
15118	PLATE,DUST SEAL SUPPORT DE JOINT PLACA-CUBREPOLVO	1757-15-118	1		
15120	SEAL,WATER JOINT ETANCHE SELLO,AGUA	1757-15-120	1		
15125	PLATE,WATER BAFFLE SUP. DEFLECTEUR D'EAU PLACA DEFLECTORA AGUA	0118-15-125	1		
15130	COVER,WATER PUMP CACHE, POMPE A EAU	3648-15-130D	1		SA22C .. 500001

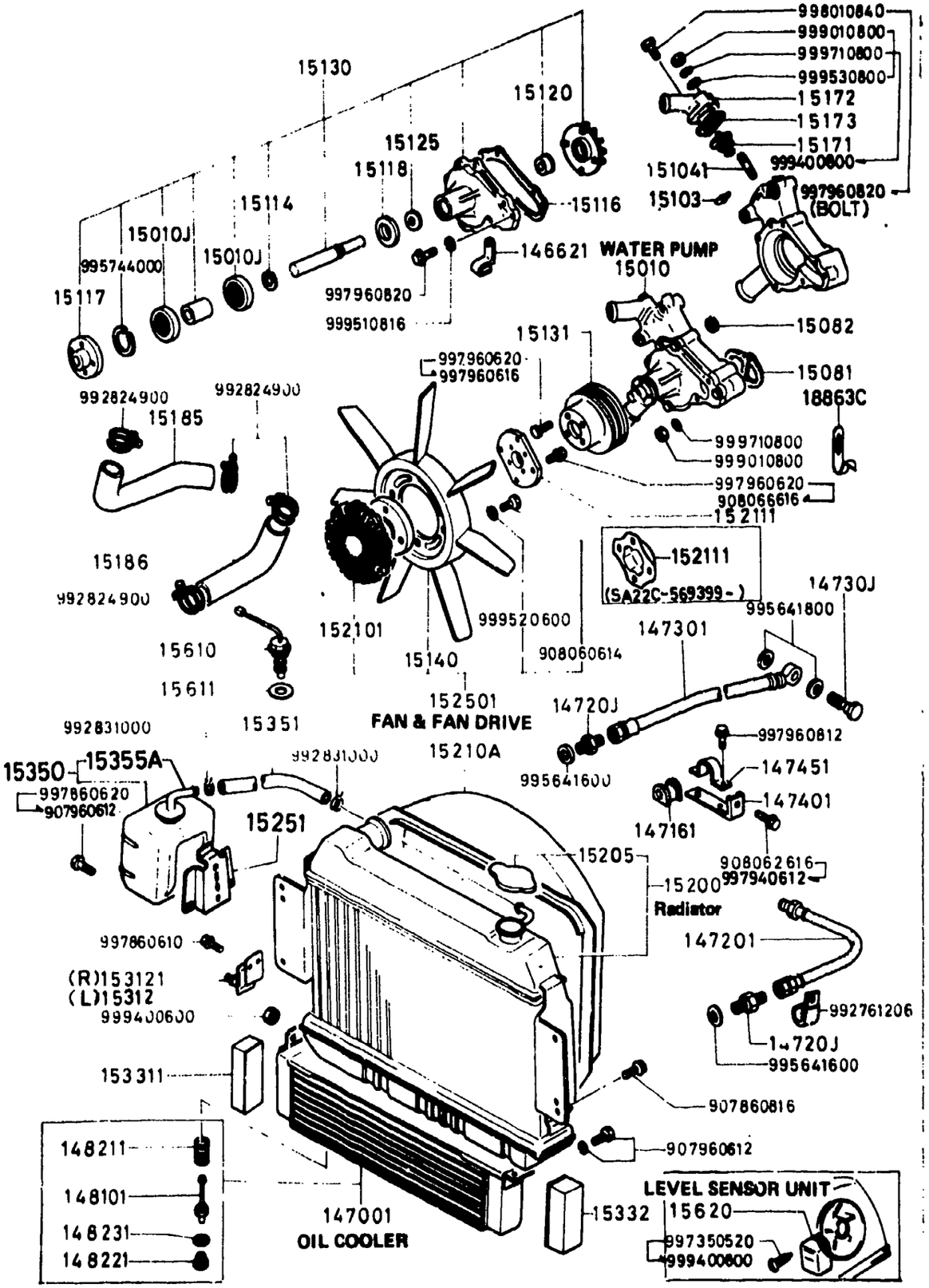

1500A-3 COOLING SYSTEM

D-CODE (Key No.)	PART NAME	PART No.	Qty.	MODEL / DESCRIPTION	VIN (Chassis No.)
15130 CONT' D	COBERTOR DE LA BOMBA DE A	3648-15-130D			-615691
	<A >	*3648-15-130E	1		SA22C .. 615692-
15131	PULLEY POULIE POLEA	1757-15-151B	1		
15140	FAN, COOLING VENTILLATEUR, REFROIDISSE ABANICO DELANTERO	3648-15-200	1		SA22C .. 500001 -619392
	<A >	*3648-15-200A	1		SA22C .. 619393-
15171	THERMOSTAT THERMOSTAT	8553-15-171	1		
15172	COVER, THERMOSTAT COUVERCLE THERMOSTAT	8519-15-172A	1		SA22C .. 500001 -510188
		8519-15-172B	1		SA22C .. 510189 -566640
		8872-15-170	1		SA22C .. 566641-
15173	GASKET JOINT EMPAQUE	1757-15-173	1		
15185	HOSE, WATER DURITE D'EAU MANGUERA, AGUA	8671-15-511	1		
15186	HOSE, WATER DURITE D'EAU MANGUERA, AGUA	8871-15-521	1		
15200	RADIATOR RADIATEUR RADIADOR	8341-15-310	1	80 MODEL M/T	SA22C .. 568501-
		8342-15-310A	1	80 MODEL FED. A/T	SA22C .. 568501-
			1	CANADA A/T CALIF. A/T	SA22C .. 569619-

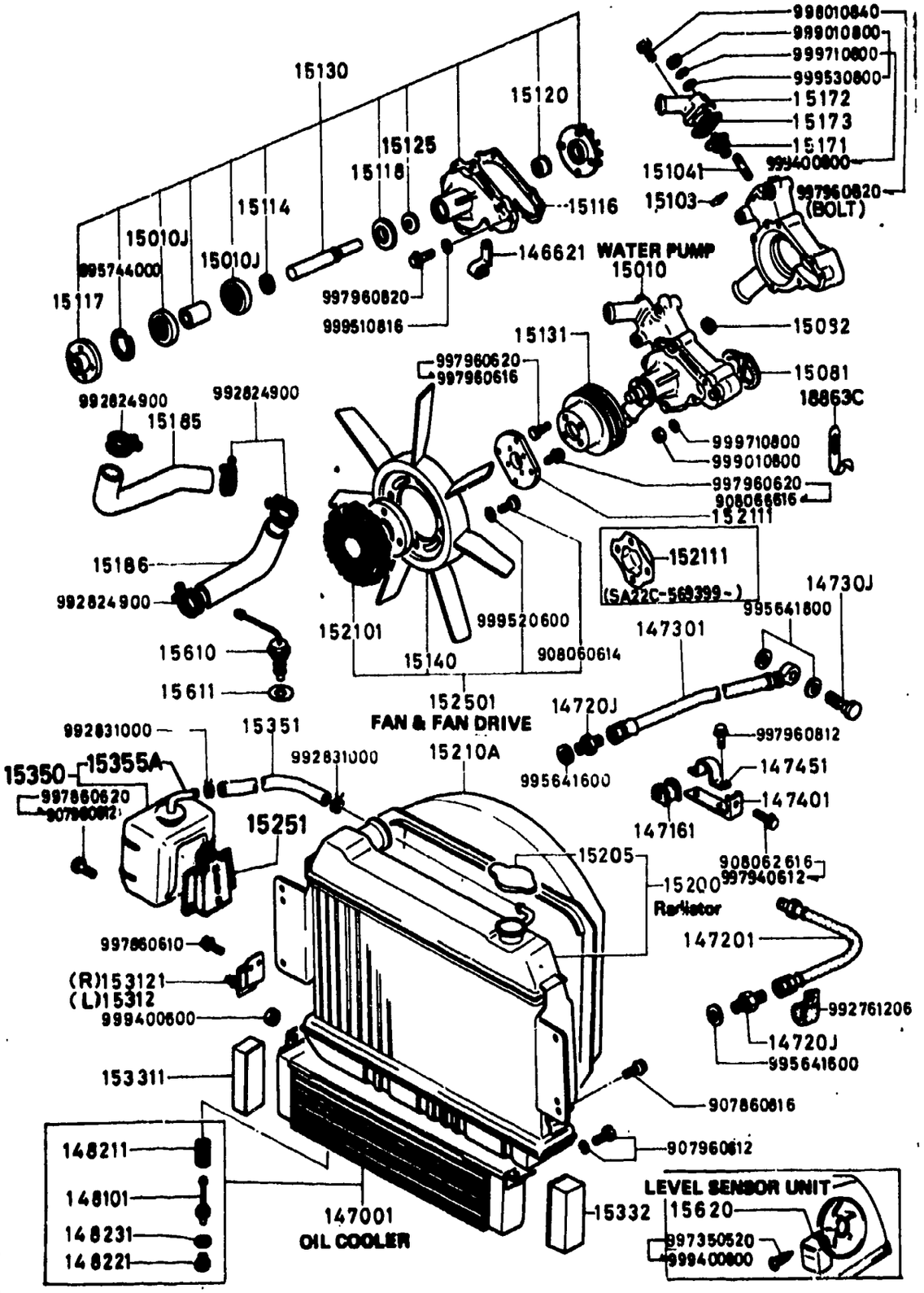

1500A-4 COOLING SYSTEM

D-CODE (Key No.)	PART NAME	PART No.	Qty.	MODEL/DESCRIPTION	VIN (Chassis No.)
15200 CONT'D		8871-15-310B	1	79 MODEL M/T	SA22C .. 500001 -568500
		8872-15-310A	1	79 MODEL A/T	SA22C .. 500001 -568500
		8872-15-310B	1	CANADA A/T CALIF. A/T	SA22C .. 568501 -569618
15205	CAP,RADIATOR BOUCHON DE RADIATEUR TAPA DEL RADIADOR	0488-15-205	1		SA22C .. 500001 -507592
		8871-15-205	1		SA22C .. 507593-
15210A	COWLING,RADIATOR TOLE DE RADIATEUR RADIADOR DEL ENFRIAMENTO	8871-15-401A	1		
152101	FAN DRIVE MECANISME DE VENTILLATEUR POLEA ABANICO	1202-15-210	1		
152111	SPACER,PULLEY RONDELLE DE POULIE ESPACIADOR,POLEA	1907-15-211A	1		SA22C .. 500001 -569398
		8872-15-211	1		SA22C .. 569399-
152501	FAN & FAN DRIVE VENTILLATEUR & MECANISME ABANICO & POLEA	3648-15-250	1		SA22C .. 500001 -619392
	<A>	*3648-15-250A	1		SA22C .. 619393-
15251	BRACKET,SUB TANK ATTACHE, VASE D'EXPANSION SOPORTE,SUB-TANQUE	*0866-67-521	1		
15312	RUBBER,INSULATION CAOUTCHOUC ISOLANT GOMA,AISLADORA	8871-15-312	1	(L SIDE)	
153121	RUBBER,INSULATION CAOUTCHOUC ISOLANT GOMA,AISLADORA	1128-15-312A	1	(R SIDE)	
153311	SEAL,AIR JOINT HERMETIQUE SELLO,AIRE	8871-15-331	1		
15332	SEAL,AIR	8871-15-332	1		

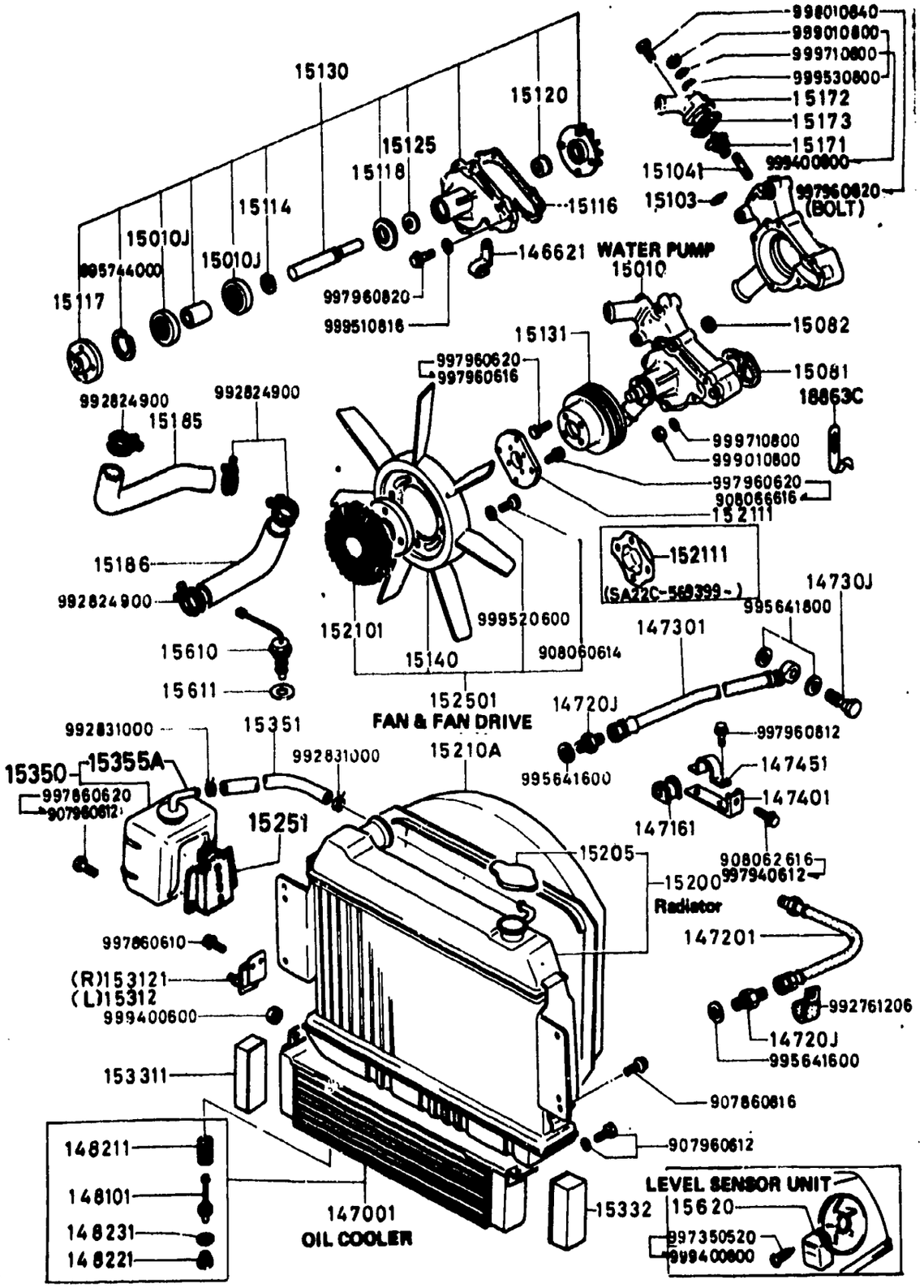

1500A-5★ COOLING SYSTEM

D-CODE (Key No.)	PART NAME	PART No.	Qty.	MODEL/DESCRIPTION	VIN (Chassis No.)
15332	JOINT HERMETIQUE	8871-15-332			
CONT'D	SELLO,AIRE				
15350	TANK,SUB VASE D'EXPANSION DEPOSITO,AUXILIAR	8871-15-350	1		
15351	HOSE,WATER DURITE D'EAU MANGUERA, AGUA	8871-15-351A	1		
15355A	CAP,SUB TANK BOUCHON RESERVOIR AUXIL.	★1052-15-355	1		
15610	SENSOR,WATER LEVEL CONTACT NIVEAU EAU	8553-15-610A	1		
15611	GASKET JOINT EMPAQUE	8553-15-611	1		
15620	UNIT,W. LEVEL SENSOR CONTACT NIVEAU EAU	8553-15-620D	1		
18863C	CLIP	8156-18-863A	1		SA22C .. 597273-

1600A CLUTCH (MANUAL)

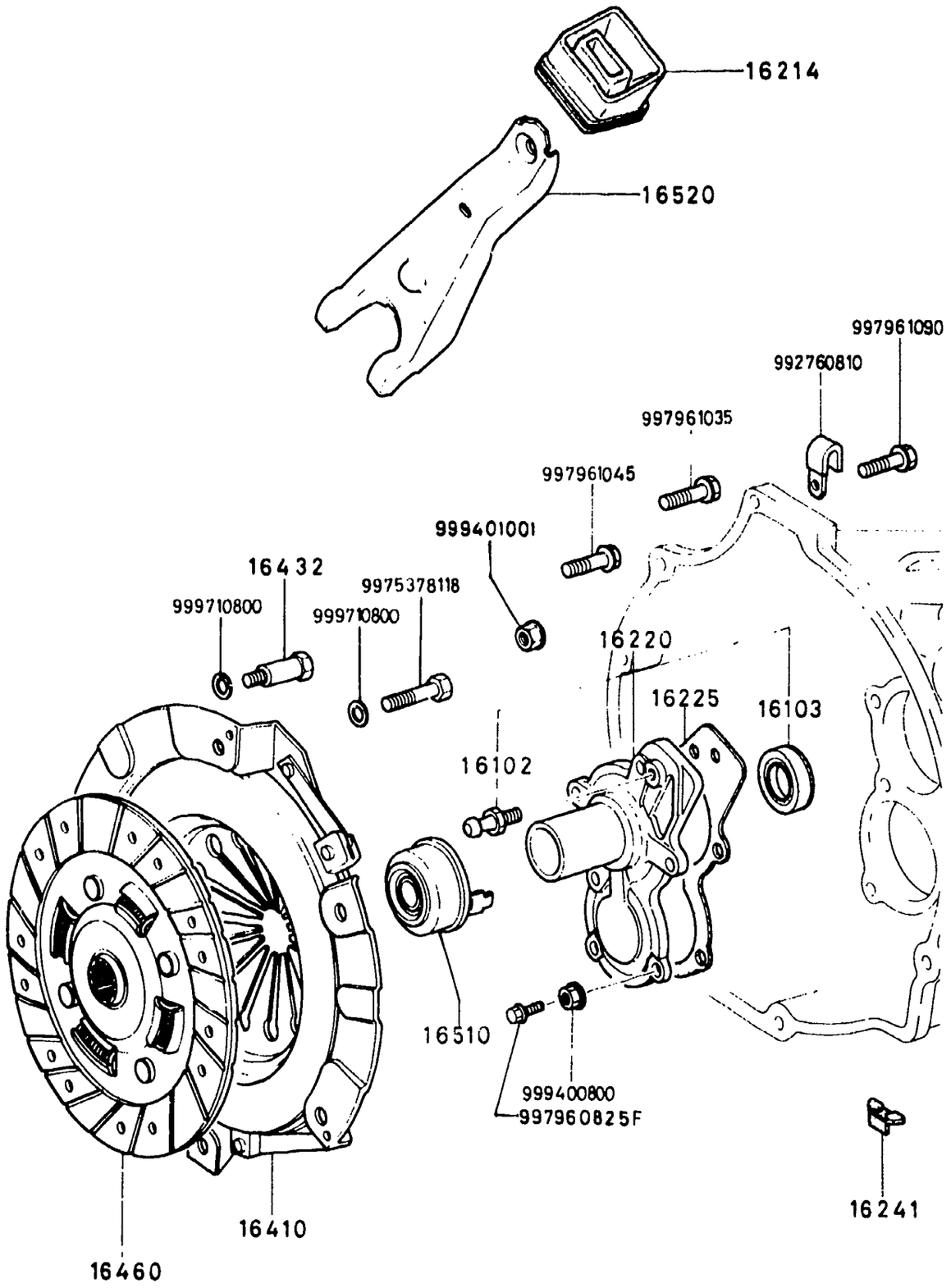

1600A-1* CLUTCH (MANUAL)

D-CODE (Key No.)	PART NAME	PART No.	Qty.	MODEL DESCRIPTION	VIN (Chassis No.)
16102	PIN,PIVOT PIVOT D'APPUI EJE CENTRAL- PIVOTE	0603-16-102B	1		
16103	SEAL,OIL ARRET D'HUILE RETEN,ACEITE	0603-16-103	1		
16214	COVER,DUST CACHE, POUSSIERE CUBERTOR PARA POLVO	3975-16-214	1		
16220	COVER,FRONT CACHE AV. COBERTOR DELANTERO	8540-16-220A	1		
16225	GASKET,FRONT COVER JOINT, CARTER AV. EMPAQUE, CUBIERTA DELANTE	8540-16-225	1		
16241	PLUG,BLIND BOUCHON TAPON	8540-16-241A	1		
16410	COVER,CLUTCH MECANISME D'EMBRAYAGE COBERTOR DE EMBRAGUE	0839-16-410B	1		
16432	BOLT,REAMER BOULON PERNO,ESCARIADOR	0839-16-432	2		
16460	DISC,CLUTCH DISQUE D'EMBRAYAGE DISCO DEL CLUCHT	0862-16-460C	1		SA22C .. 500001 -553672
	<A>	0862-16-460D	1		SA22C .. 553673-
16510	COLLAR,CLUTCH REL. BUTEE COLLAR DEL EMBRAGUE	8540-16-510B	1		
16520	FORK,CLUTCH RELEASE FOURCHETTE DE DEBRAYAGE HORQUILLA DEL EMBRAGUE	8540-16-520A	1		

SECTION NUMBER INDEX (ENGINE)

STARTING LOCATION	SECTION No.	SECTION NAME
1–C2	1000A	SHORT ENGINE & GASKET SET
1–D2	1030A	ROTOR HOUSING
1–G2	1040A	HOUSING (FRONT & REAR)
1–C3	1100A	ECCENTRIC SHAFT & FLYWHEEL
1–F3	1110A	ROTOR
1–C4	1300A	IN. MANIFOLD
1–D4	1310A	THERMAL REACTOR
1–E4	1320A	FUEL SYSTEM
1–G4	1330A	AIR CLEANER
1–H4	1350A	STARTING ASSIST SYSTEM
1–I4	1360A	CARBURETOR
1–F6	1371A	EMISSION CONTROLS (AIR PUMP & CONTROL VALVE)
1–H6	1380A	EMISSION CONTROLS (EX. SIDE)
1–C8	1400A	OIL PUMP & FILTER
1–F8	1500A	COOLING SYSTEM
1–K8	1600A	CLUTCH (MANUAL)
1–C9	1700A	T/MISSION CASE (MANUAL)
1–G9	1710A	T/MISSION GEAR (MANUAL)
1–E10	1720A	CHANGE CONTROLS (MANUAL)
1–C11	1800A	ELECTRICAL SYSTEM (ENGINE)
1–H11	1820A	DISTRIBUTOR
1–L11	1830A	ALTERNATOR
1–D12	1840A	STARTER
1–H12	1850A	BATTERY & CABLES
1–C13	1910A	CONVERTER, OIL PUMP & PIPING (AUTOMATIC T/MISSION)
1–F13	1920A	CASE & MAIN CONTROLS (AUTOMATIC T/MISSION)
1–K13	1930A	CLUTCH & PLANETARY GEAR (AUTOMATIC T/MISSION)
1–D14	1940A	LOW, REVERSE & GOVERNOR (AUTOMATIC T/MISSION)
1–G14	1950A	MANUAL LINKAGE (AUTOMATIC T/MISSION)

THE FRAMES IN THIS COLUMN INDICATE :

1–C9	1700A	T/MISSION CASE (MANUAL, 4-SPEED)
1–E9	1700AA	T/MISSION CASE (MANUAL, 5-SPEED)
1–G9	1710A	T/MISSION GEAR (MANUAL, 4-SPEED)
1–K9	1710AA	T/MISSION GEAR (MANUAL, 5-SPEED)

© 1983 Toyo Kogyo Co., Ltd.
MAY 1983

1700A T/MISSION CASE (MANUAL, 4-SPEED)

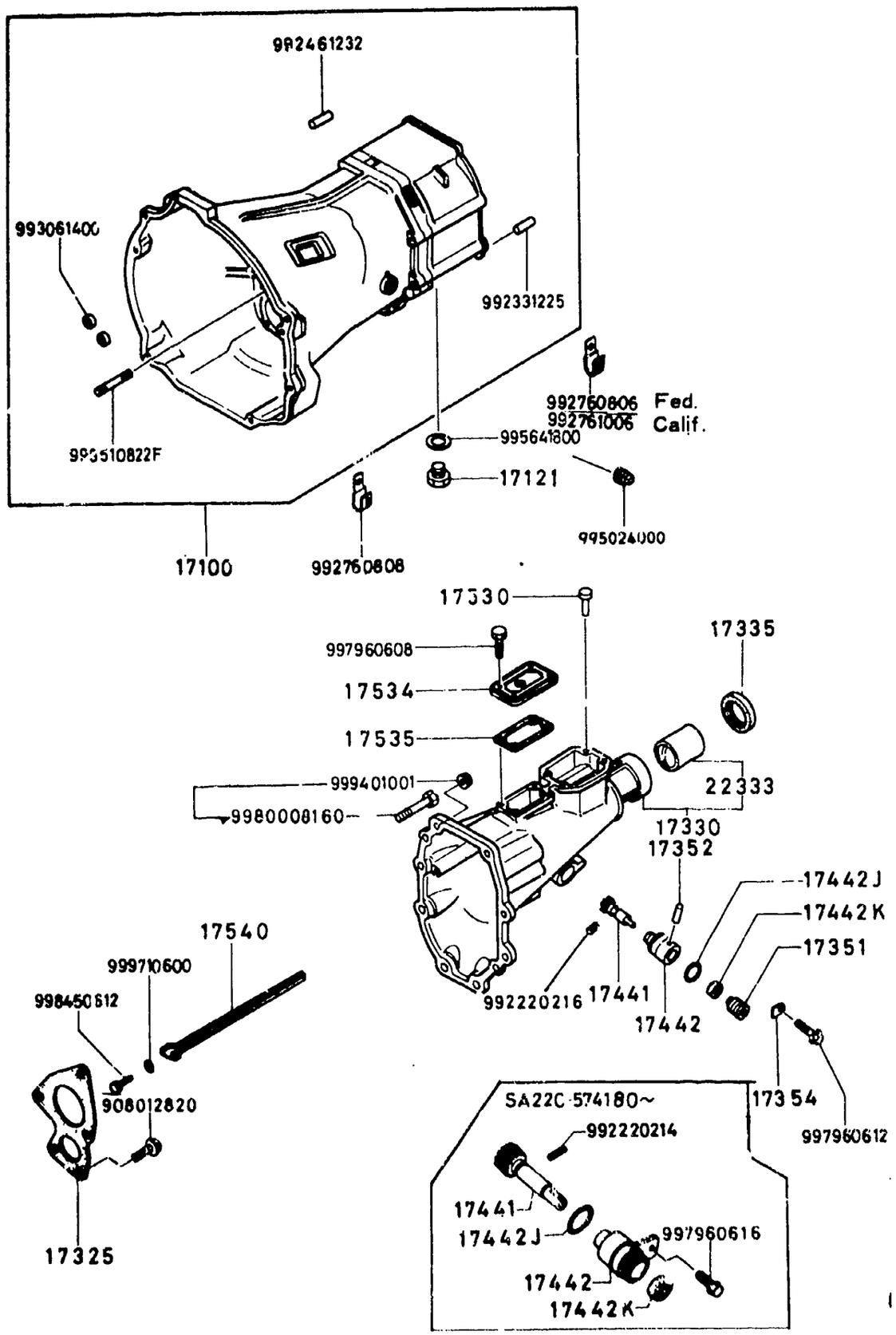

1700A-1 T/MISSION CASE (MANUAL, 4-SPEED)

D-CODE (Key No.)	PART NAME	PART No.	Qty.	MODEL/DESCRIPTION	VIN (Chassis No.)
17100	CASE, T/MISSION BOITIER, TRANSMISSION CAJA DE TRANSMISION	8540-17-100F	1	79 MODEL FED. 79 MODEL CANADA	SA22C .. 500001 -525593
		8540-17-100G	1	79 MODEL FED. 80 MODEL FED. 80 MODEL CANADA	SA22C .. 525594 -574179
	<C >	8540-17-100H		80 MODEL CANADA	SA22C .. 574180-
		8868-17-100	1	79 MODEL CALIF.	SA22C .. 500001 -525593
		8868-17-100A	1	79 MODEL CALIF. 80 MODEL CALIF.	SA22C .. 525594 -574179
	<C >	8868-17-100B	1	80 MODEL CALIF. 80 MODEL FED.	SA22C .. 574180-
17121	PLUG, MAGNET DRAIN BOUCHON DE VIDANGE AIMANT TAPON MAGNETICO DE DRENAJ	0810-17-121	1		
17325	COVER, BEARING ARRET DE ROULEMENT TAPON, COJINETE	8086-17-326	1		
17330	HOUSING, EXTENSION RALLONGE DE BOITE CASCO EXTENSION	8867-17-330A	1		
17335	SEAL, OIL ARRET D'HUILE RETEN, ACE[illegible]	0437-17-335	1		
17351	JOINT, CABLE RACCORD DE CABLE JUNTA DE CABLE	1011-17-351	1		SA22C .. 500001 -574179
17352	PIN, DOWEL GOUJON ALINEADOR, EJE	0167-17-352	1		SA22C .. 500001 -574179
17354	PLATE, LOCK PLAQUE DE FIXATION PL[illegible] - CIERRE	0111-17-354	1		SA22C .. 500001 -574179
17441	GEAR, DRIVEN PIGNON D'ENTRAINEMENT ENGRANAJE, IMPULSADOR	8057-17-441	1		SA22C .. 500001 -569398
	<AN>	8057-17-441A	1		SA22C .. 569399 -574179
		8057-17-441B	1		SA22C .. 574180-

1700A T/MISSION CASE (MANUAL, 4-SPEED)

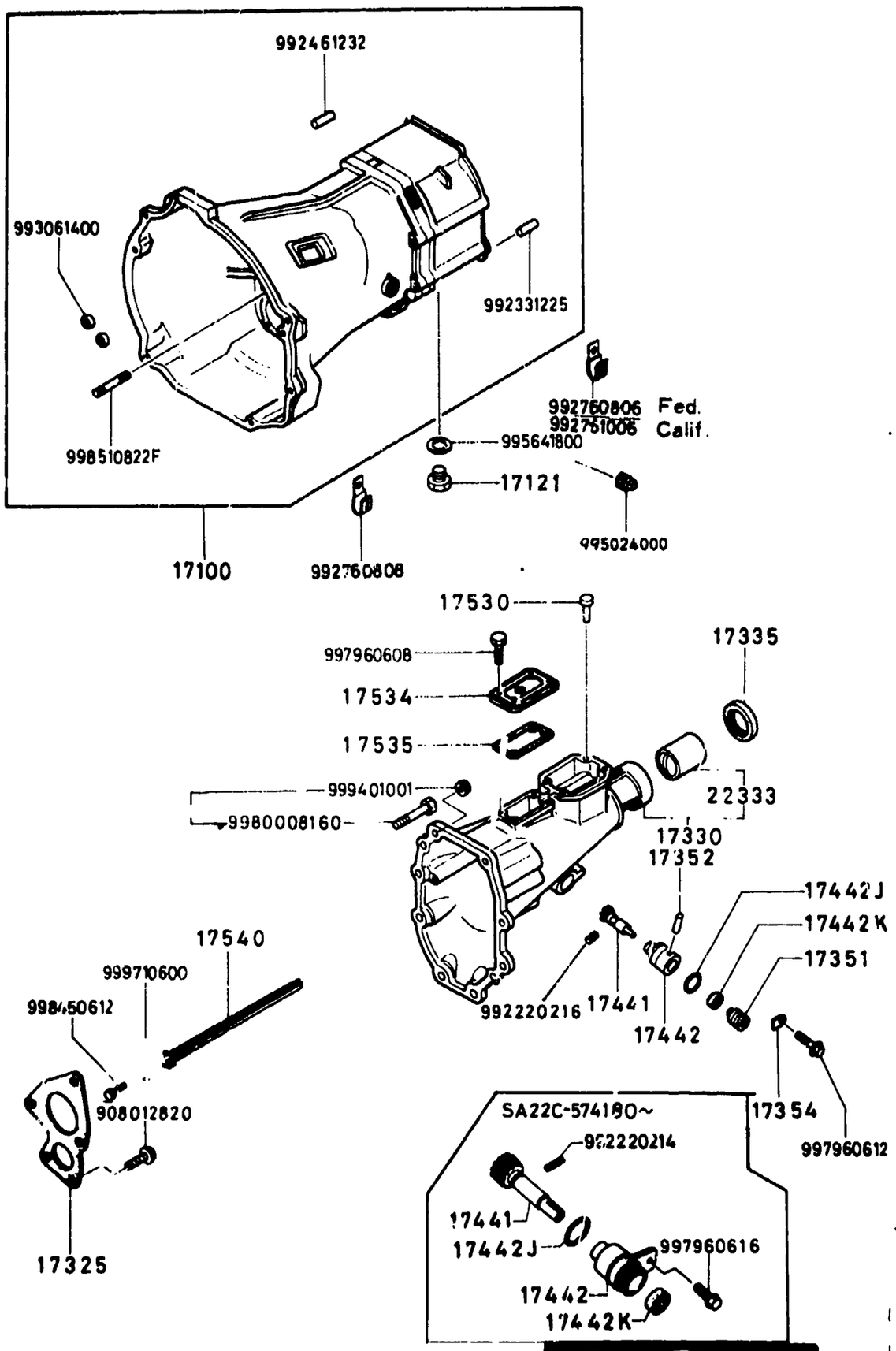

1700A-2* T/MISSION CASE (MANUAL, 4-SPEED)

D-CODE (Key No.)	PART NAME	PART No.	Qty.	MODEL DESCRIPTION	VIN (Chassis No.)
17442	SLEEVE, SPEEDOMETER DOUILLE, CABLE KM MANGUITO, VELOCIMETRO	0862-17-442	1		SA22C .. 500001 -574179
		1011-17-442	1		SA22C .. 574180-
17442J	RING, 'O' JOINT 'O' SELLO DE GOMA 'O'	1011-17-443	1		SA22C .. 574180-
		9954-10-2211	1		SA22C .. 500001 -574179
17442K	SEAL, OIL JOINT 'O' SELLO DE GOMA 'O'	9958-60-8166	1		SA22C .. 574180-
		9958-61-0207	1		SA22C .. 500001 -574179
17530	BREATHER, AIR RESPIRATEUR, AIR RESPIRADOR, AIRE	0884-17-530	1		
17534	COVER, BLIND PLAQUE INSPECTION COBERTOR TRANSPARENTE	8540-17-523	1		
17535	GASKET, BLIND COVER JOINT DE PLAQUE INSPECTIO EMPAQUE TAPA DE TIEMPO	0271-17-524	1		
17540	PASS, OIL PASSAGE D'HUILE PASAJE ACEITE	8867-17-540	1		
22333	BUSH BUSELURE BUJE	0398-22-333	1		

1700AA T/MISSION CASE (MANUAL, 5-SPEED)

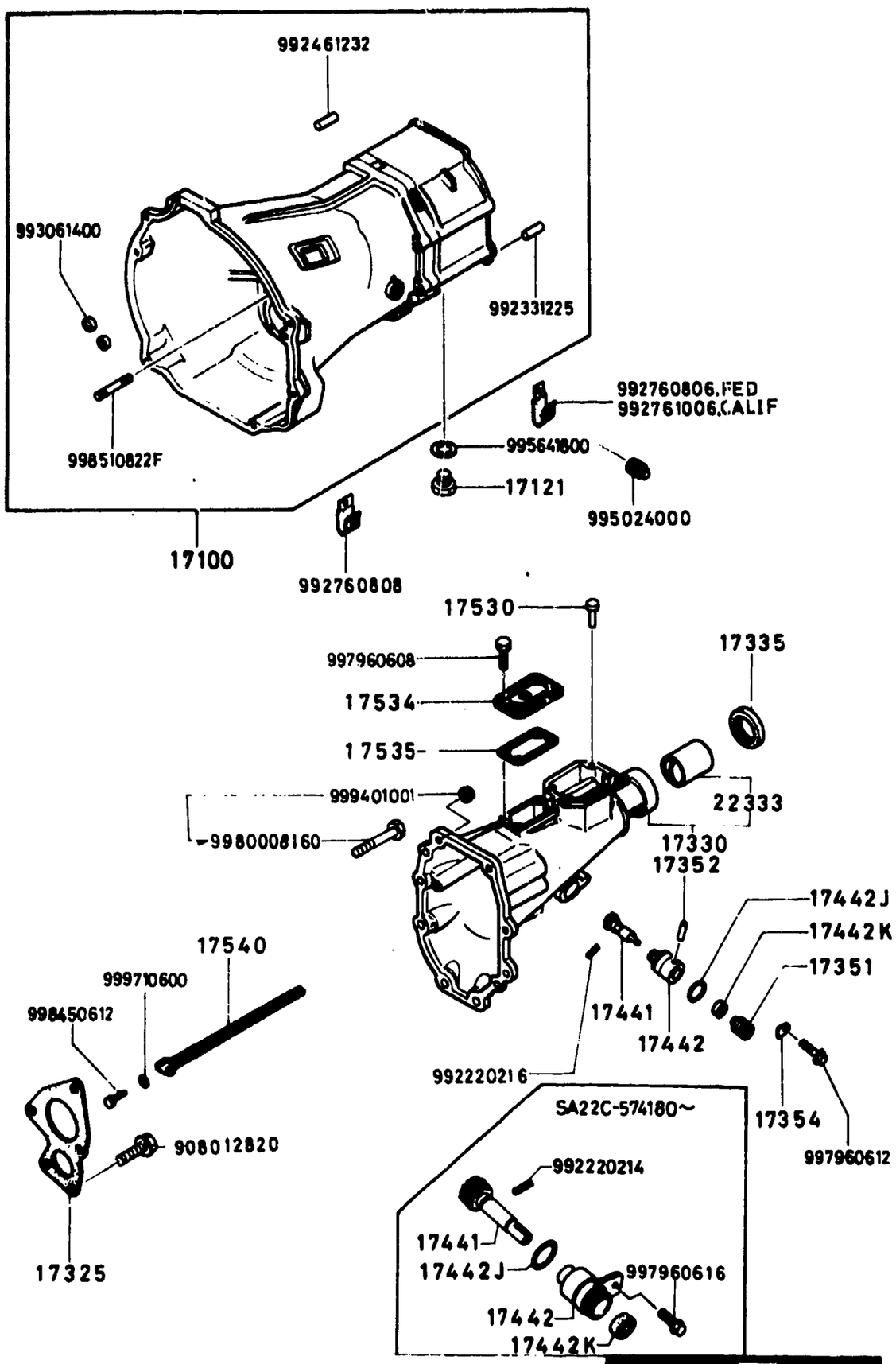

1700AA-1 T/MISSION CASE (MANUAL,5-SPEED)

D-CODE (Key No.)	PART NAME	PART No.	Qty.	MODEL DESCRIPTION	VIN (Chassis No.)
17100	CASE,T/MISSION BOITIER, TRANSMISSION CAJA DE TRANSMISION	8540-17-100F	1	79 MODEL FED. 79 MODEL CANADA	SA22C .. 500001 -525593
		8540-17-100G	1	79 MODEL FED. 80 MODEL FED. 80 MODEL CANADA	SA22C .. 525594 -574179
	<C >	8540-17-100H	1	80 MODEL CANADA	SA22C .. 574180-
		8868-17-100	1	79 MODEL CALIF.	SA22C .. 500001 -525593
		8868-17-100A	1	79 MODEL CALIF. 80 MODEL CALIF.	SA22C .. 525594 -574179
	<C >	8868-17-100B	1	80 MODEL FED. 80 MODEL CALIF.	SA22C .. 574180-
17121	PLUG,MAGNET DRAIN BOUCHON DE VIDANGE AIMANT TAPON MAGNETICO DE DRENAJ	0810-17-121	1		
17325	COVER,BEARING ARRET DE ROULEMENT TAPON,COJINETE	8086-17-326	1		
17330	HOUSING,EXTENSION RALLONGE DE BOITE CASCO EXTENSION	8540-17-330B	1	79 MODEL FED. 79 MODEL CANADA 80 MODEL CANADA	
		8871-17-330A	1	79 MODEL CALIF. 80 MODEL CALIF. 80 MODEL FED.	
17335	SEAL,OIL ARRET D'HUILE RETEN,ACEITE	0437-17-335	1		
17351	JOINT,CABLE RACCORD DE CABLE JUNTA DE CABLE	1011-17-351	1		SA22C .. 500001 -574179
17352	PIN,DOWEL GOUJON ALINEADOR, EJE	0187-17-352	1		SA22C .. 500001 -574179
17354	PLATE,LOCK PLAQUE DE FIXATION PLACA - CIERRE	0111-17-354	1		SA22C .. 500001 -574179
17441	GEAR,DRIVEN PIGNON D'ENTRAINEMENT ENGRANAJE, IMPULSADOR	8057-17-441	1		SA22C .. 500001 -569398
	<AN>	8057-17-441A	1		SA22C ..

1700AA T/MISSION CASE (MANUAL, 5-SPEED)

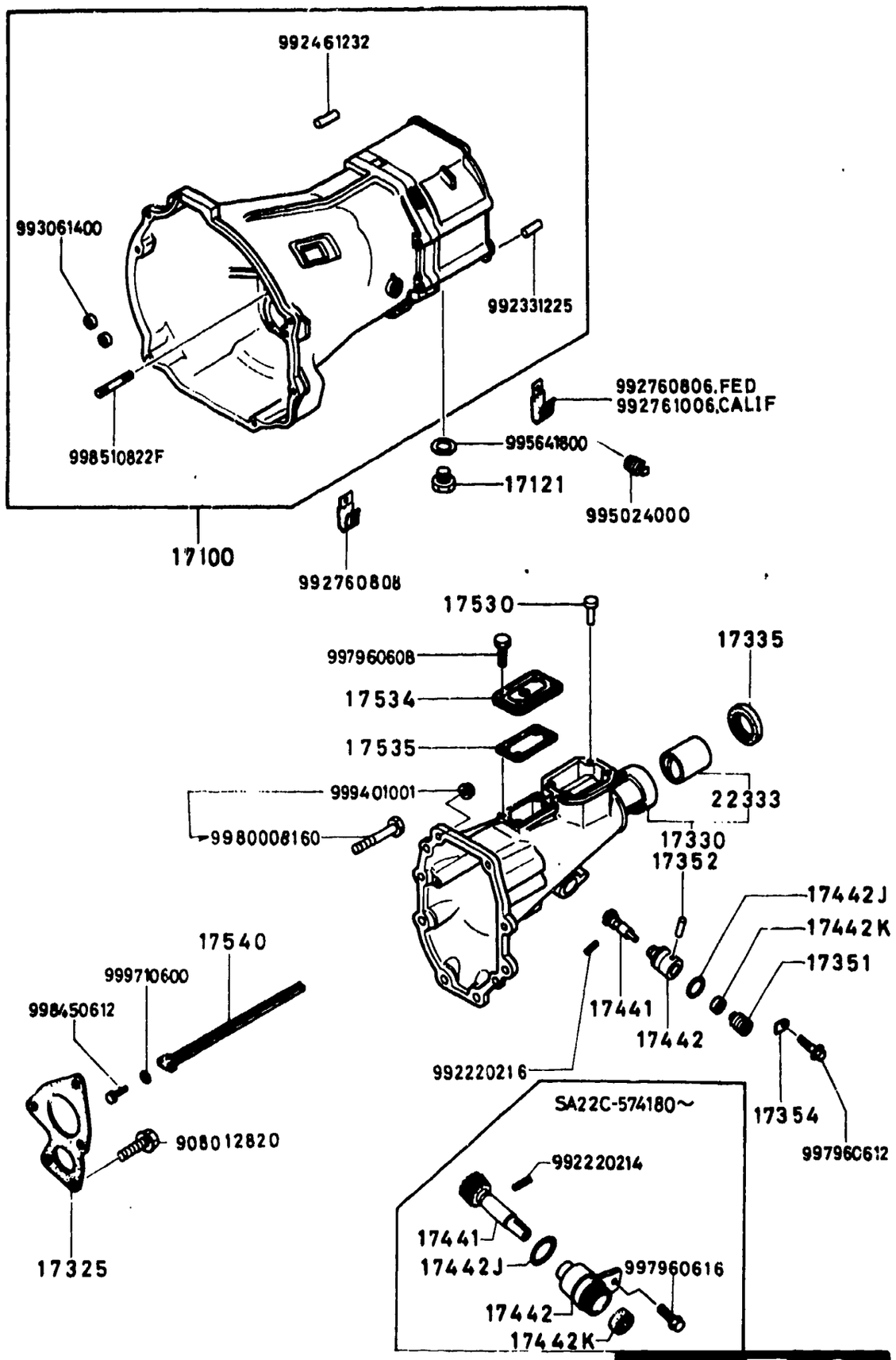

1700AA-2* T/MISSION CASE (MANUAL, 5-SPEED)

D-CODE (Key No.)	PART NAME	PART No.	Qty.	MODEL DESCRIPTION	VIN (Chassis No.)
17441 CONT'D		8057-17-441A		..	569399 -574179
		8057-17-441B	1		SA22C .. 574180-
17442	SLEEVE,SPEEDOMETER DOUILLE, CABLE KM MANGUITO,VELOCIMETRO	0862-17-442	1		SA22C .. 500001 -574179
		1011-17-442	1		SA22C .. 574180-
17442J	RING,'O' JOINT'O' SELLO DE GOMA 'O'	1011-17-443	1		SA22C .. 574180-
		9954-10-2211	1		SA22C .. 500001 -574179
17442K	SEAL,OIL JOINT 'O' SELLO DE GOMA 'O'	9958-60-8166	1		SA22C .. 574180-
		9958-61-0207	1		SA22C .. 500001 -574179
17530	BREATHER,AIR RESPIRATEUR, AIR RESPIRADOR,AIRE	0884-17-530	1		
17534	COVER,BLIND PLAQUE INSPECTION COBERTOR TRANSPARENTE	8540-17-523	1		
17535	GASKET,BLIND COVER JOINT DE PLAQUE INSPECTIO EMPAQUE TAPA DE TIEMPO	0271-17-524	1		
17540	PASS,OIL PASSAGE D'HUILE PASAJE ACEITE	8086-17-540	1		
22333	BUSH BUSELURE BUJE	0398-22-333	1		

1710A T/MISSION GEAR (MANUAL, 4-SPEED)

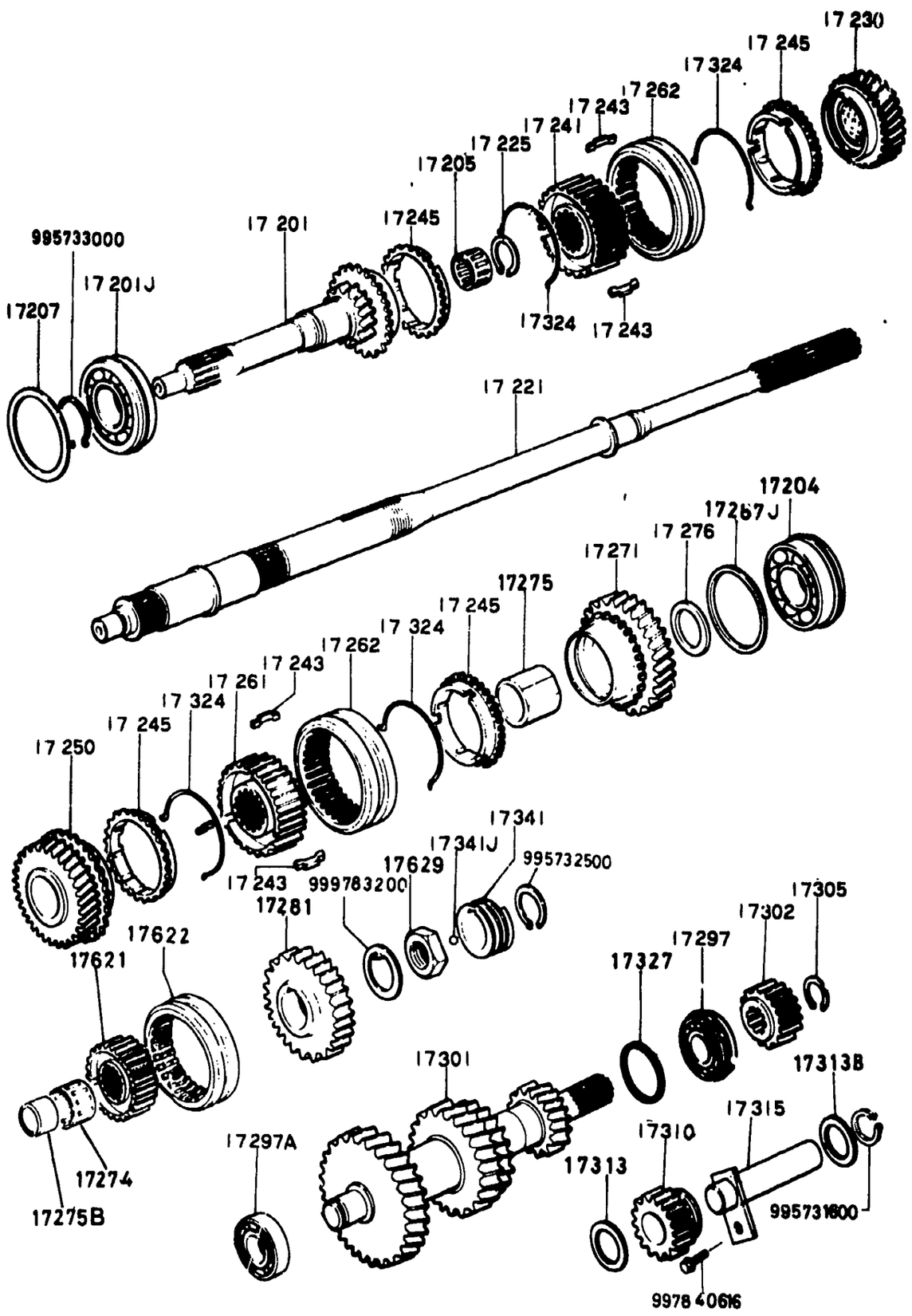

17 10A-1 T/MISSION GEAR (MANUAL, 4-SPEED)

D-CODE (Key No.)	PART NAME	PART No.	Qty.	MODEL DESCRIPTION	V : N (Chassis No.)
17201	GEAR, MAIN DRIVE ARBRE MOTEUR ENGRANAJE, DESPLAZABLE	8540-17-201	1		SA22C .. 500001 -541116
	<A>	8540-17-201A	1		SA22C .. 541117-
17201J	BEARING, BALL ROULEMENT A BILLES RODAMIENTO DE BOLAS	9960-63-3063	1		
17204	BEARING, BALL ROULEMENT A BILLES RODAMIENTO DE BOLAS	9960-66-3063	1		
17205	BEARING, ROLLER ROULEMENT RODAMIENTO, RODILLOS	0603-17-210	1		
17207	SHIM, ADJUST EPAISSEUR LAINA, AJUSTE	9996-36-315	1		
		9996-36-330	1		
17221	SHAFT, MAIN ARBRE RECEPTEUR EJE, PRINCIPAL	8086-17-221A	1		
17225	RING, SNAP CALE ANILLO, SEGURO	0317-17-225	1		
17230	GEAR, 3RD PIGNON RECEPTEUR, 3EME ENGRANAJE, TERCERA MARCHA	8540-17-231A	1		
17241	HUB, CLUTCH PIGNON FIXE PATENTE DE EMBRAGUE	0862-17-241A	1	(2ND & 3RD)	
17243	KEY, SYNCHRONIZER CALE DE SYNCHRONISATION CUNA DE SINCRONIZADOR	0187-17-243	6		
17245	RING, SYNCHRONIZER BAGUE DE SYNCHRONISATION ARO, SINCRONIZADOR	C881-17-245C	4		
17250	GEAR, 2ND PIGNON RECEPTEUR, 2EME ENGRANAJE, SEGUNDA MARCHA	8540-17-251	1		

1710A T/MISSION GEAR (MANUAL, 4-SPEED)

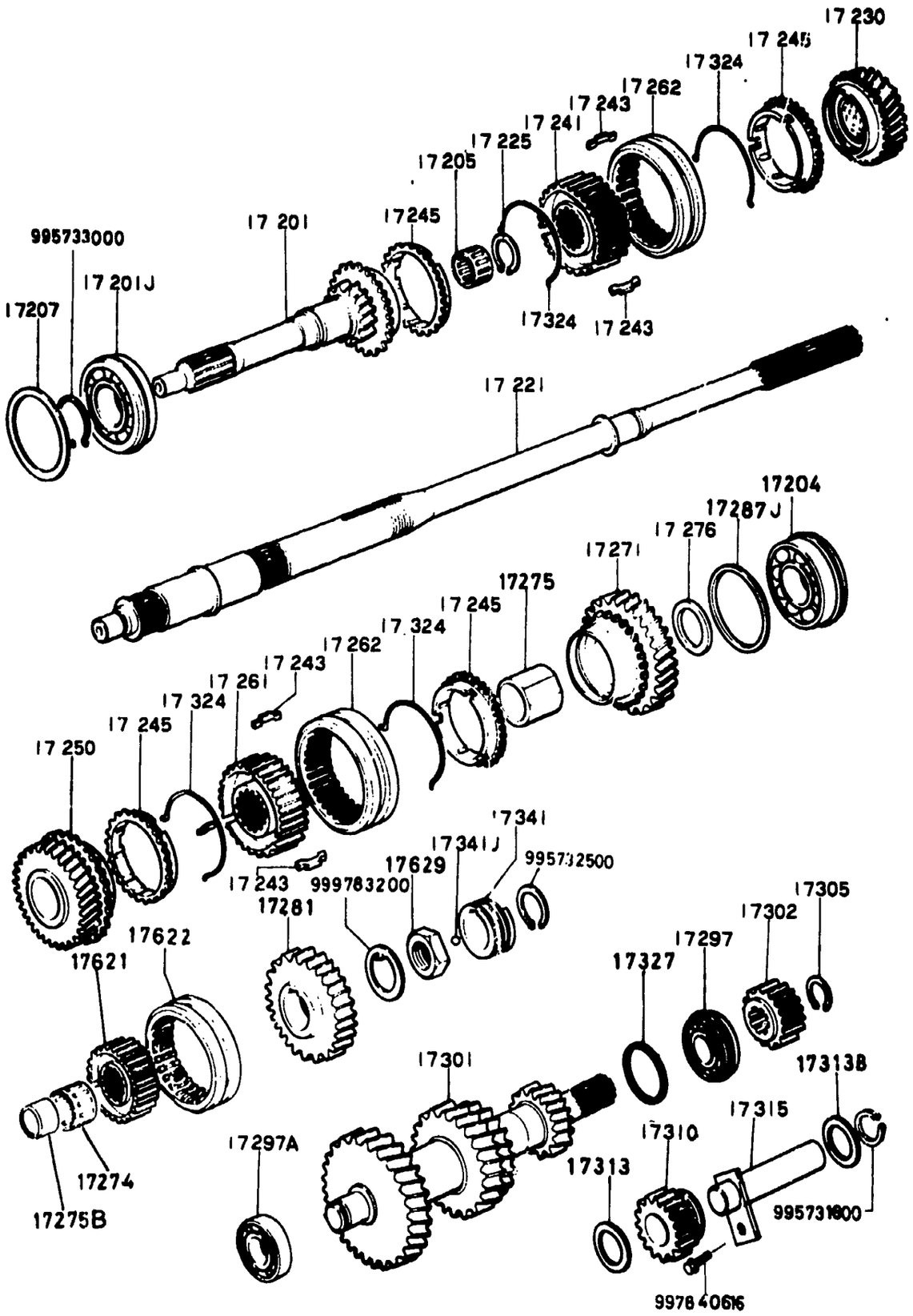

1710A-2 T/MISSION GEAR (MANUAL, 4-SPEED)

D-CODE (Key No.)	PART NAME	PART No.	Qty.	MODEL DESCRIPTION	VIN (Chassis No.)
17261	HUB, CLUTCH PIGNON FIXE PATENTE DE EMBRAGUE	0437-17-261	1	(1ST & 2ND)	
17262	SLEEVE, CLUTCH HUB SYNCHROMECHE MANGUITO, MACERO EMBRAGUE	0862-17-262B	2		SA22C .. 500001 -573960
		0862-17-262C	2		SA22C .. 573961-
17271	GEAR, 1ST PIGNON RECEPTEUR, 1ER ENGRANAJE, PRIMERA MARCHA	8540-17-271	1		
17274	BEARING, NEEDLE ROULEMENT RODAMIENTO DE AGUJAS	4069-17-283A	2		
17275	RACE, INNER BAGUE DE ROULEMENT, INTERI PISTA, INTERIOR	8540-17-275	1		
17275B	RACE, INNER BAGUE DE ROULEMENT, INTERI PISTA, INTERIOR	4069-17-284D	1		
17276	WASHER, THRUST EPAISSEUR, PIGNON MARCHE ARANDELA, EMPUJE	0259-17-274A	2	(T=3.0)	
		0259-17-276	2	(T=2.2)	
		0259-17-277	2	(T=2.7)	
		0259-17-278	2	(T=3.2)	
		0259-17-279	2	(T=3.7)	
17281	GEAR, REVERSE PIGNON MARCHE ARR.	8118-17-281	1		
17287J	SHIM, ADJUST	9996-36-310		(T=0.1)	

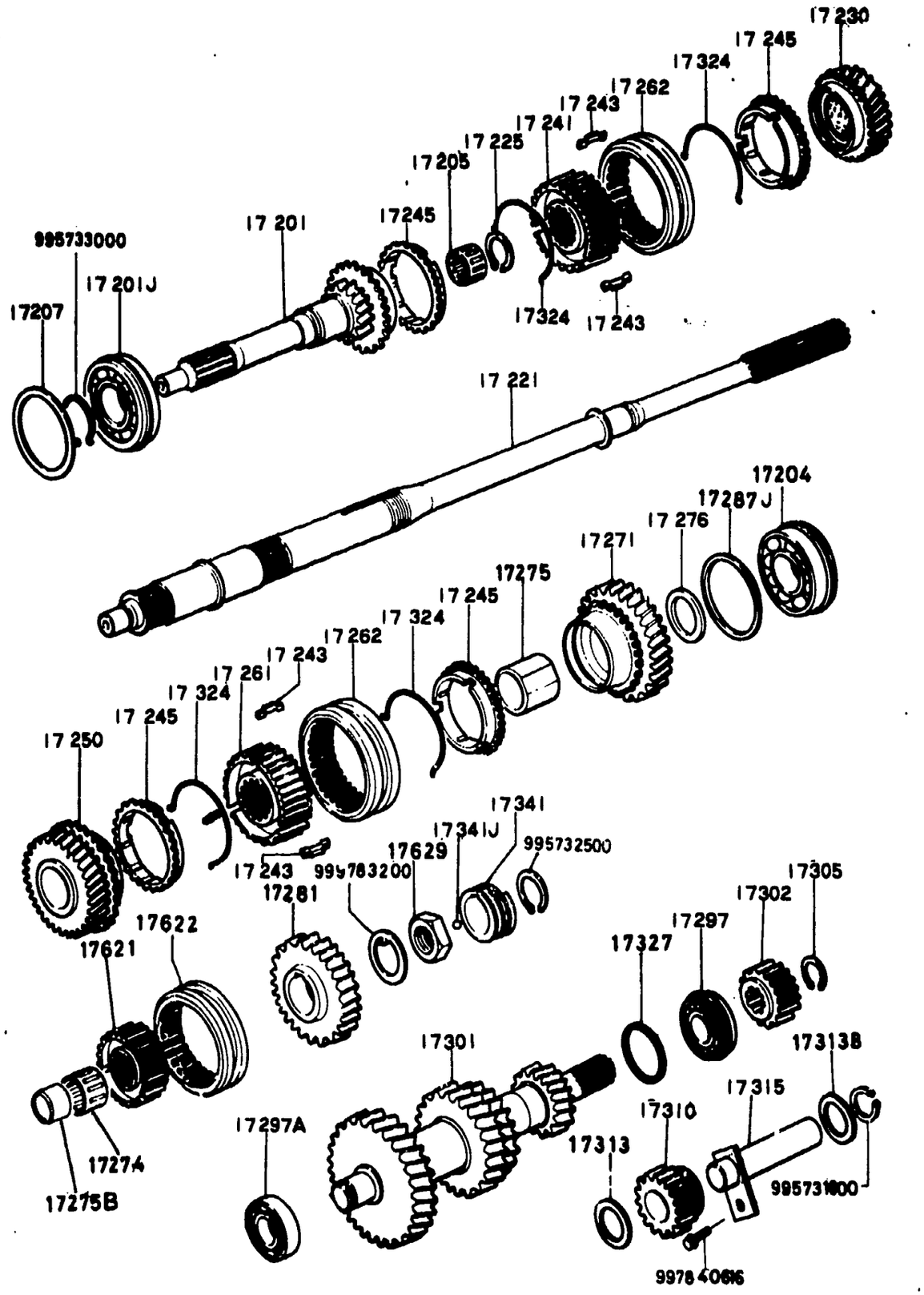

D-CODE (Key No.)	PART NAME	PART No.	Qty.	MODEL/DESCRIPTION	V I N (Chassis No.)
17287J CONT'D	EPAISSEUR LAINA, AJUSTE	9996-36-310	2		
		9996-36-330	1	(T=0.3)	
17297	BEARING, BALL ROULEMENT A BILLES RODAMIENTO DE BOLAS	0821-17-297	1		
17297A	BEARING, BALL ROULEMENT RODAMIENTO DE BOLAS	8086-17-297	1		
17301	GEAR, COUNTER SHAFT TRAIN FIXE ENGRANAJE, EJE FIJO	8867-17-301A	1		SA22C .. 500001 -541116
	<A >	8867-17-301B	1		SA22C .. 541117 -619392
		8867-17-301C	1		SA22C .. 619393-
17302	GEAR, COUNTER REVERSE PIGNON DE COMMANDE ENGRANAJE, RETROCESO FIJO	8086-17-302	1		SA22C .. 500001 -597272
	<A >	8086-17-302A	1		SA22C .. 597273-
17305	RING, SNAP CALE ANILLO, SEGURO	0603-17-305	1		
17310	GEAR, REVERSE IDLE PIGNON DE RENVOI ENGRANAJE, MEDIO RETROCES	8086-17-310	1		
17313	WASHER, THRUST EPAISSEUR, PIGNON MARCHE ARANDELA, EMPUJE	4069-17-313	1		
17313B	WASHER, THRUST EPAISSEUR, PIGNON MARCHE ARANDELA, EMPUJE	4077-17-314A	1	(T=2.8)	
		4077-17-315A	1	(T=3.0)	
		4077-17-316		(T=2.6)	

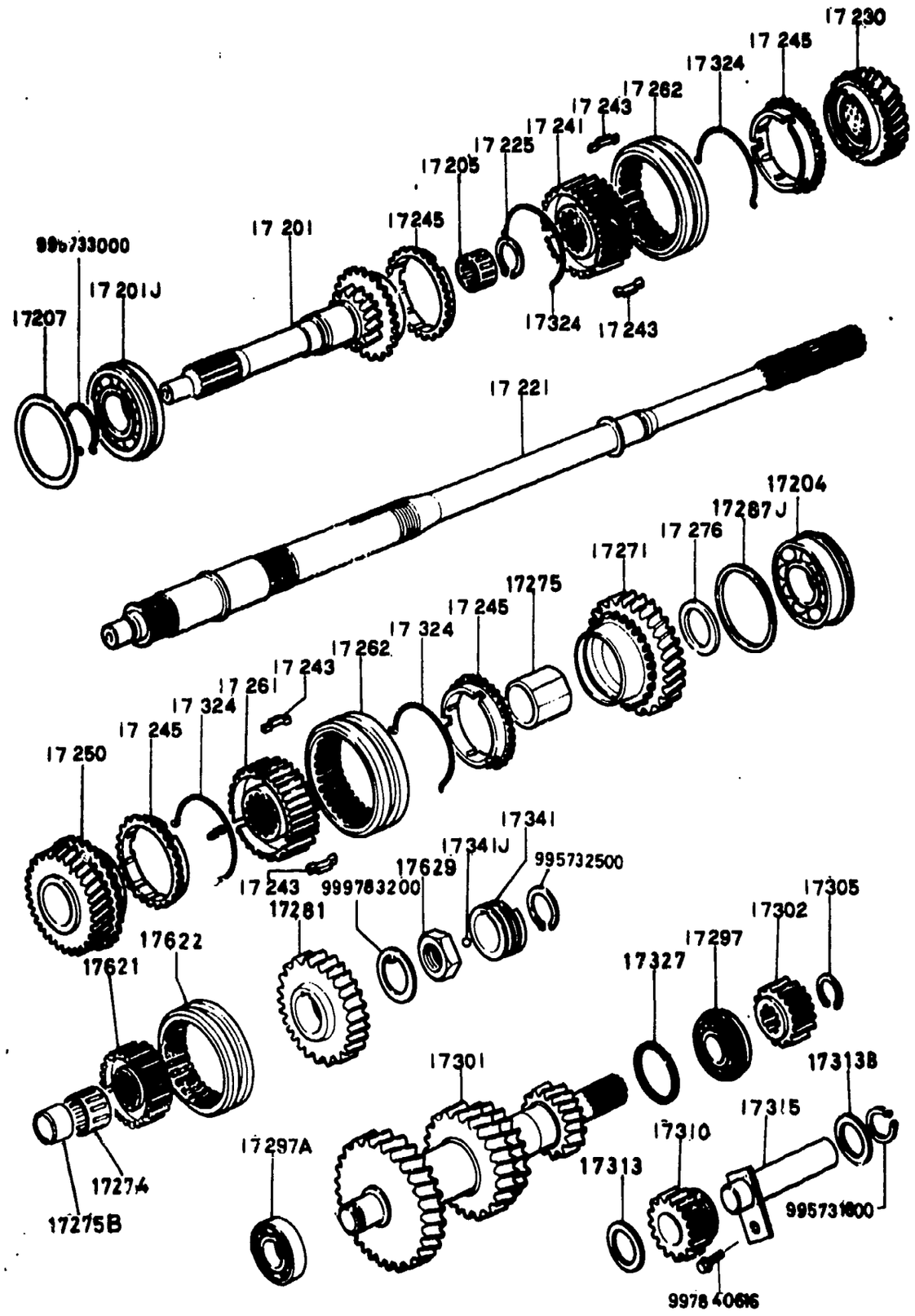

1710A-4* T/MISSION GEAR (MANUAL,4-SPEED)

D-CODE (Key No.)	PART NAME	PART No.	Q'ty.	MODEL/DESCRIPTION	VIN (Chassis No.)
17313B CONT' D		4077-17-316	1		
17315	SHAFT,REV. IDLE GEAR ARBRE, PIGNON MARCHE ARR EJE,ENGRANAJE AUX.TRASERO	8086-17-140	1		
17324	SPRING,SYNC.KEY RESSORT, BAGUE SYNCHRO RESORTE,CHAVETA DE SINCRO	0600-17-324	4		
17327	SHIM,ADJUST EPAISSEUR LAINA,AJUSTE	0305-17-327	2	(T=0.1)	
		0305-17-328	1	(T=0.3)	
17341	GEAR,DRIVE PIGNON D'ENTRAINEMENT ENGRANAJE, CONDUCTOR	3728-17-341	1		SA22C .. 500001 -569398
	<AN>	3728-17-341A	1		SA22C .. 569399-
17341J	BALL,STEEL BILLE D'ACIER BOLA,ACERO	9961-11-500	1		
17621	HUB,CLUTCH PIGNON FIXE PATENTE DE EMBRAGUE	8601-17-621	1		
17622	SLEEVE,CLUTCH BAGUE D'EMBRAYAGE	3648-17-622A	1		SA22C .. 500001 -578960
		3648-17-622B	1		SA22C .. 578961-
17629	NUT,LOCK ECROU DE SERRAGE TUERCA,SEGURO	8601-17-629	1		

1710AA T/MISSION GEAR (MANUAL, 5-SPEED)

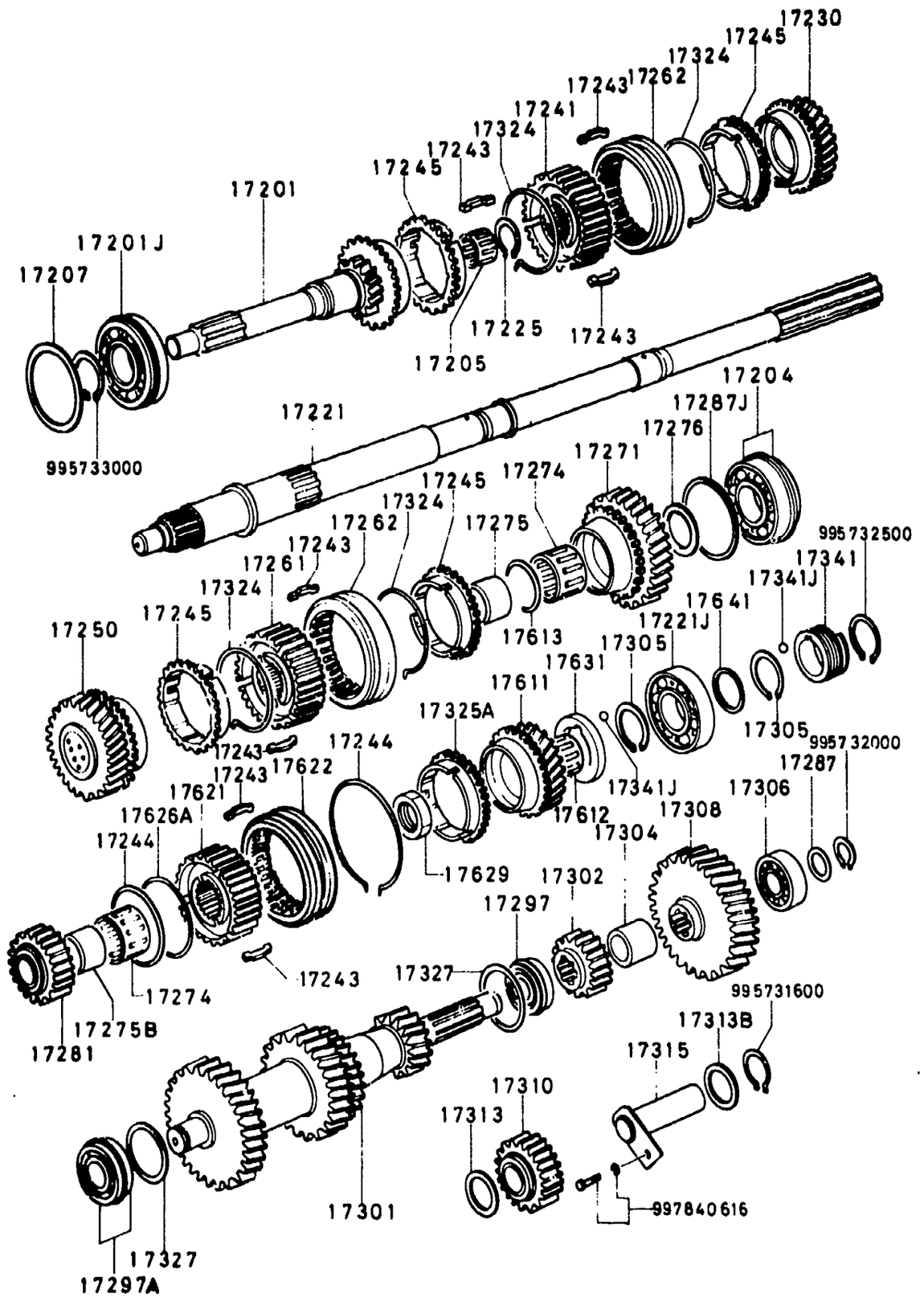

1710AA-1 T/MISSION GEAR (MANUAL, 5-SPEED)

D-CODE (Key No.)	PART NAME	PART No.	Qty.	MODEL DESCRIPTION	VIN (Chassis No.)
17201	GEAR,MAIN DRIVE ARBRE MOTEUR ENGRANAJE, DESPLAZABLE	8540-17-201	1		SA22C .. 500001 -541116
	<A>	8540-17-201A	1		SA22C .. 541117-
17201J	BEARING,BALL ROULEMENT A BILLES RODAMIENTO DE BOLAS	9960-63-3063	1		
17204	BEARING,BALL ROULEMENT A BILLES RODAMIENTO DE BOLAS	9960-66-3063	1		
17205	BEARING,ROLLER ROULEMENT RODAMIENTO,RODILLOS	0603-17-210	1		
17207	SHIM,ADJUST EPAISSEUR LAINA,AJUSTE	9996-36-315	1	(T=0.15)	
		9996-36-330	1	(T=0.3)	
17221	SHAFT,MAIN ARBRE RECEPTEUR EJE,PRINCIPAL	8086-17-221A	1		
17221J	BEARING,BALL ROULEMENT A BILLES RODAMIENTO DE BOLAS	9960-66-3053	1		
17225	RING,SNAP CALE ANILLO,SEGURO	0317-17-225	1		
17230	GEAR,3RD PIGNON RECEPTEUR, 3EME ENGRANAJE, TERCERA MARCHA	8540-17-231A	1		
17241	HUB,CLUTCH PIGNON FIXE PATENTE DE EMBRAGUE	0862-17-241A	1	(3RD & 4TH)	
17243	KEY,SYNCHRONIZER CALE DE SYNCHRONISATION CUNA DE SINCRONIZADOR	0187-17-243	9		
17244	SPRING,SYNCHRO. KEY RESSORT, BAGUE SYNCHRO RESORTE,CHAVETA DE SINCRO	0103-17-244A	2		
17245	RING,SYNCHRONIZER BAGUE DE SYNCHRONISATION ARO,SINCRONIZADOR	0881-17-245C	4		

1710AA T/MISSION GEAR (MANUAL, 5-SPEED)

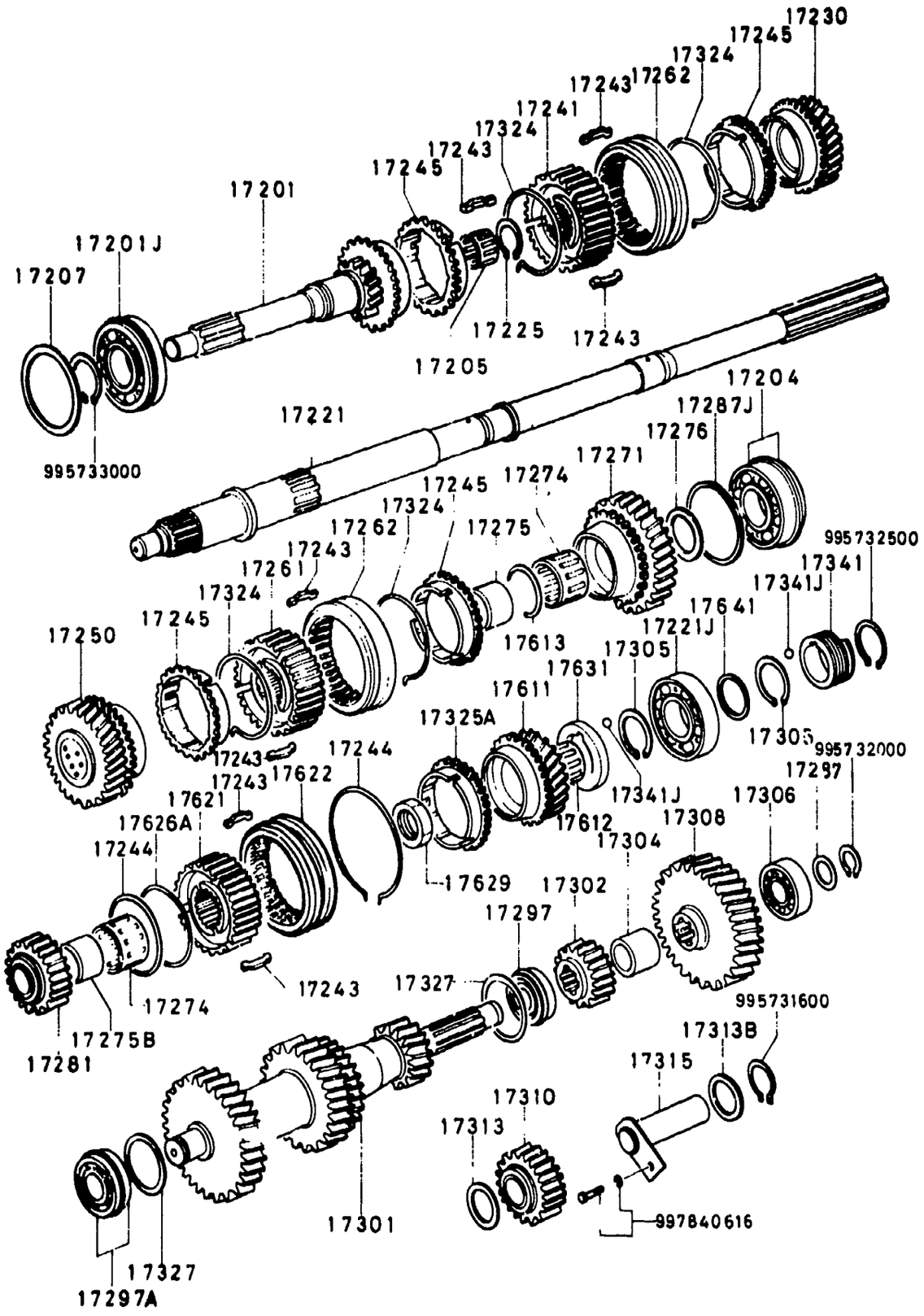

17710AA-2 T/MISSION GEAR (MANUAL, 5-SPEED)

D-CODE (Key No.)	PART NAME	PART No.	Qty.	MODEL DESCRIPTION	VIN (Chassis No.)
17250	GEAR,2ND PIGNON RECEPTEUR, 2EME ENGRANAJE, SEGUNDA MARCHA	8540-17-251	1		
17261	HUB,CLUTCH PIGNON FIXE PATENTE DE EMBRAGUE	0437-17-201	1	(1ST & 2ND)	
17262	SLEEVE,CLUTCH HUB SYNCHROMESHE MANGUITO,MACERO EMBRAGUE	0862-17-262B	2		SA22C .. 500001 -573760
		0862-17-262C	2		SA22C .. 573961-
17271	GEAR,1ST PIGNON RECEPTEUR, 1ER ENGRANAJE, PRIMERA MARCHA	8540-17-271	1		
17274	BEARING,NEEDLE ROULEMENT RODAMIENTO DE AGUJAS	4069-17-283A	2		
17275	RACE,INNER BAGUE DE ROULEMENT,INTERI PISTA,INTERIOR	8540-17-275	1		
17275B	RACE,INNER BAGUE DE ROULEMENT,INTERI PISTA,INTERIOR	4069-17-284D	1		
17276	WASHER,THRUST EPAISSEUR, PIGNON MARCHE ARANDELA,EMPUJE	0259-17-274A	2	(T=3.0)	
		0259-17-276	2	(T=2.2)	
		0259-17-277	2	(T=2.7)	
		0259-17-273	2	(T=3.2)	
		0259-17-279	2	(T=3.7)	
17281	GEAR,REVERSE PIGNON MARCHE ARR.	8118-17-281	1		
17287	SHIM,ADJUST EPAISSEUR LAINA,AJUSTE	0419-17-288	1	(T=2.1)	
		0419-17-291	1	(T=2.2)	

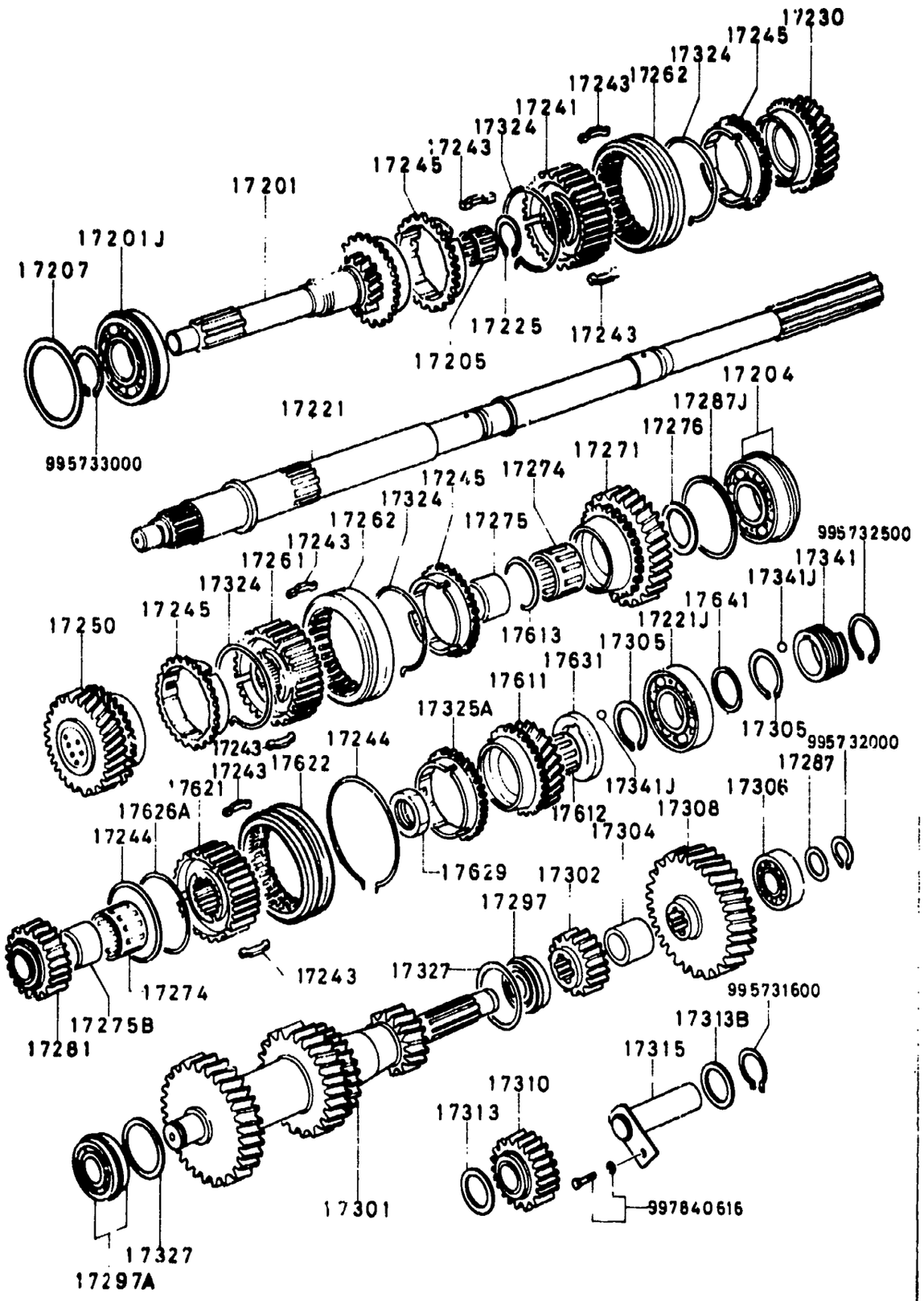

D-CODE (Key No.)	PART NAME	PART No.	Qty.	MODEL DESCRIPTION	VIN (Chassis No.)
17287 CONT'D		0419-17-292	1	(T=2.3)	
		0419-17-293	1	(T=2.4)	
17287J	SHIM, ADJUST EPAISSEUR LAINA, AJUSTE	9996-36-310	2	(T=0.1)	
		9996-36-330	1	(T=0.3)	
17297	BEARING, BALL ROULEMENT A BILLES RODAMIENTO DE BOLAS	0821-17-297	1		
17297A	BEARING, BALL ROULEMENT	8086-17-297	1		
17301	GEAR, COUNTER SHAFT TRAIN FIXE ENGRANAJE, EJE FIJO	8540-17-301A	1		SA22C .. 500001 -502998
		8540-17-301B	1		SA22C .. 502999 -541116
	<A>	8540-17-301C	1		SA22C .. 541117 -619392
		•8540-17-301D	1		SA22C .. 619393-
17302	GEAR, COUNTER REVERSE PIGNON DE COMMANDE ENGRANAJE, RETROCESO FIJO	8086-17-302	1		SA22C .. 500001 -597272
	<A>	8086-17-302A	1		SA22C .. 597273-
17304	SPACER RONDELLE ESPACIADOR	8086-17-304	1		
17305	RING, SNAP CALE ANILLO, SEGURO	0839-17-305B	2		
17306	BEARING, BALL ROULEMENT A BILLES RODAMIENTO DE BOLAS	9960-66-3043	1		
17308	GEAR, COUNTER TRAIN FIXE ENGRANAJE, TREN FIJO	8540-17-308A	1		SA22C .. 500001 -619392

1710AA T/MISSION GEAR (MANUAL, 5-SPEED)

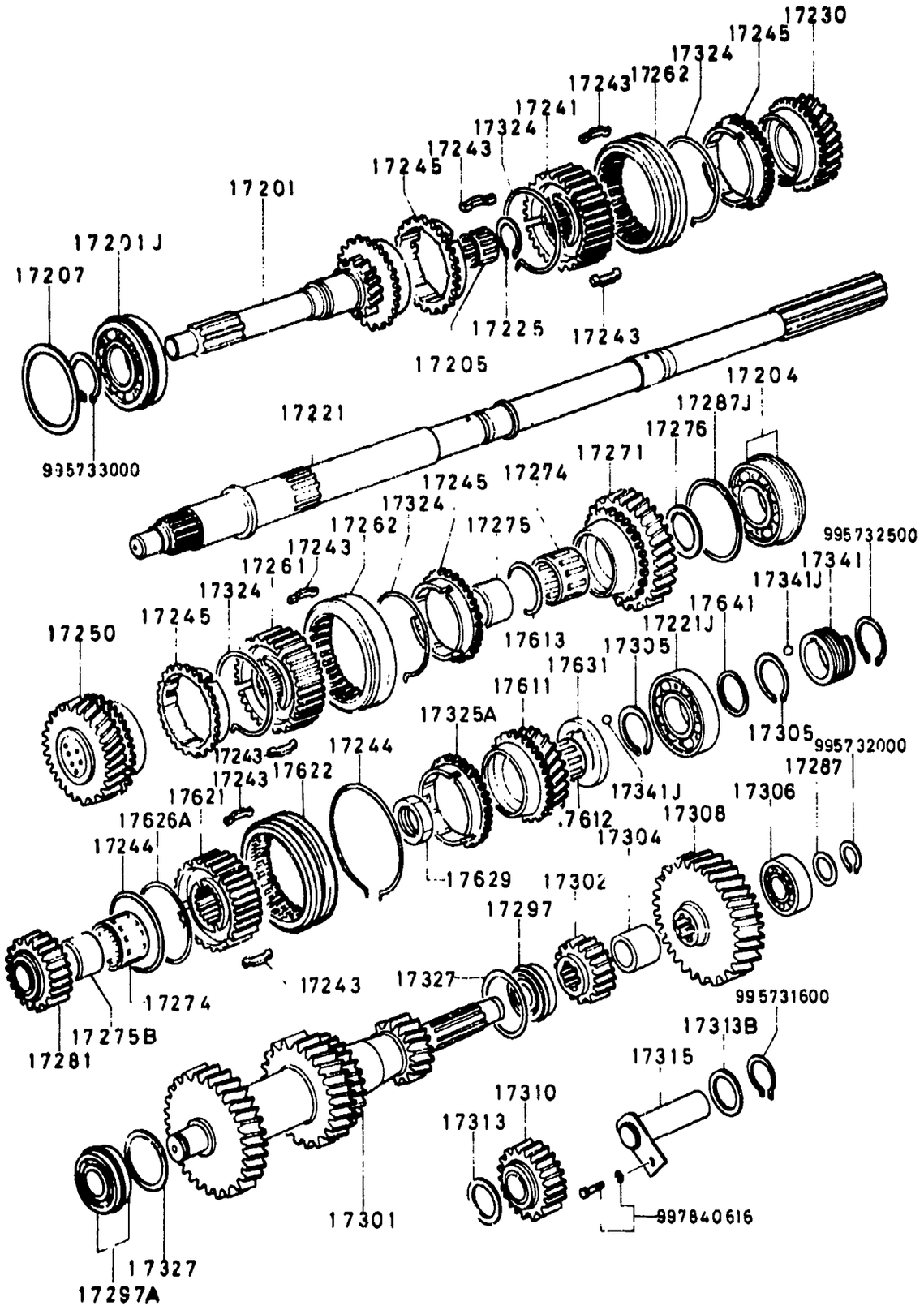

1710AA-4 T/MISSION GEAR (MANUAL,5-SPEED)

D-CODE (Key No.)	PART NAME	PART No.	Qty.	MODEL DESCRIPTION	VIN (Chassis No)
17308 CONT'D	<A >	*8540-17-308B	1		SA22C .. 619393-
17310	GEAR,REVERSE IDLE PIGNON DE RENVOI ENGRANAJE, MEDIO RETROCES	8086-17-310	1		
17313	WASHER,THRUST EPAISSEUR, PIGNON MARCHE ARANDELA,EMPUJE	4069-17-313	1		
17313B	WASHER,THRUST EPAISSEUR, PIGNON MARCHE ARANDELA,EMPUJE	4077-17-314A	1	(T=2.8)	
		4077-17-315A	1	(T=3.0)	
		4077-17-316	1	(T=2.6)	
17315	SHAFT,REV. IDLE GEAR ARBRE, PIGNON MARCHE ARR EJE,ENGRANAJE AUX.TRASERO	8086-17-140	1		
17324	SPRING,SYNC.KEY RESSORT, BAGUE SYNCHRO RESURTE,CHAVETA DE SINCRO	0600-17-324	4		
17325A	RING,SYNCHRONIZER BAGUE DE SYNCHRONISATION ARO,SINCRONIZADOR	0371-17-245A	1		SA22C .. 510960-
		0862-17-245A	1		SA22C .. 500001 -510959
17327	SHIM,ADJUST EPAISSEUR LAINA,AJUSTE	0305-17-327	2	(T=0.1)	
		0305-17-328	1	(T=0.3)	
17341	GEAR,DRIVE PIGNON D'ENTRAINEMENT ENGRANAJE, CONDUCTOR	3728-17-341	1		SA22C .. 500001 -569398
	<AN>	3728-17-341A	1		SA22C .. 569399-
17341J	BALL,STEEL BILLE D'ACIER BOLA,ACERO	9961-11-500	2		

SECTION NUMBER INDEX (ENGINE)

STARTING LOCATION	SECTION No.	SECTION NAME
1–C2	1000A	SHORT ENGINE & GASKET SET
1–D2	1030A	ROTOR HOUSING
1–G2	1040A	HOUSING (FRONT & REAR)
1–C3	1100A	ECCENTRIC SHAFT & FLYWHEEL
1–F3	1110A	ROTOR
1–C4	1300A	IN. MANIFOLD
1–D4	1310A	THERMAL REACTOR
1–E4	1320A	FUEL SYSTEM
1–G4	1330A	AIR CLEANER
1–H4	1350A	STARTING ASSIST SYSTEM
1–I4	1360A	CARBURETOR
1–F6	1371A	EMISSION CONTROLS (AIR PUMP & CONTROL VALVE)
1–H6	1380A	EMISSION CONTROLS (EX. SIDE)
1–C8	1400A	OIL PUMP & FILTER
1–F8	1500A	COOLING SYSTEM
1–K8	1600A	CLUTCH (MANUAL)
1–C9	1700A	T/MISSION CASE (MANUAL)
1–G9	1710A	T/MISSION GEAR (MANUAL)
1–E10	1720A	CHANGE CONTROLS (MANUAL)
1–C11	1800A	ELECTRICAL SYSTEM (ENGINE)
1–H11	1820A	DISTRIBUTOR
1–L11	1830A	ALTERNATOR
1–D12	1840A	STARTER
1–H12	1850A	BATTERY & CABLES
1–C13	1910A	CONVERTER, OIL PUMP & PIPING (AUTOMATIC T/MISSION)
1–F13	1920A	CASE & MAIN CONTROLS (AUTOMATIC T/MISSION)
1–K13	1930A	CLUTCH & PLANETARY GEAR (AUTOMATIC T/MISSION)
1–D14	1940A	LOW, REVERSE & GOVERNOR (AUTOMATIC T/MISSION)
1–G14	1950A	MANUAL LINKAGE (AUTOMATIC T/MISSION)

THE FRAMES IN THIS COLUMN INDICATE :

1---K9	1710AA	T/MISSION GEAR (MANUAL, 5-SPEED)
1---E10	1720A	CHANGE CONTROLS (MANUAL, 4-SPEED)
1---I10	1720AA	CHANGE CONTROLS (MANUAL, 5-SPEED)

© 1983 Toyo Kogyo Co., Ltd.
MAY 1983

1710AA T/MISSION GEAR (MANUAL, 5-SPEED)

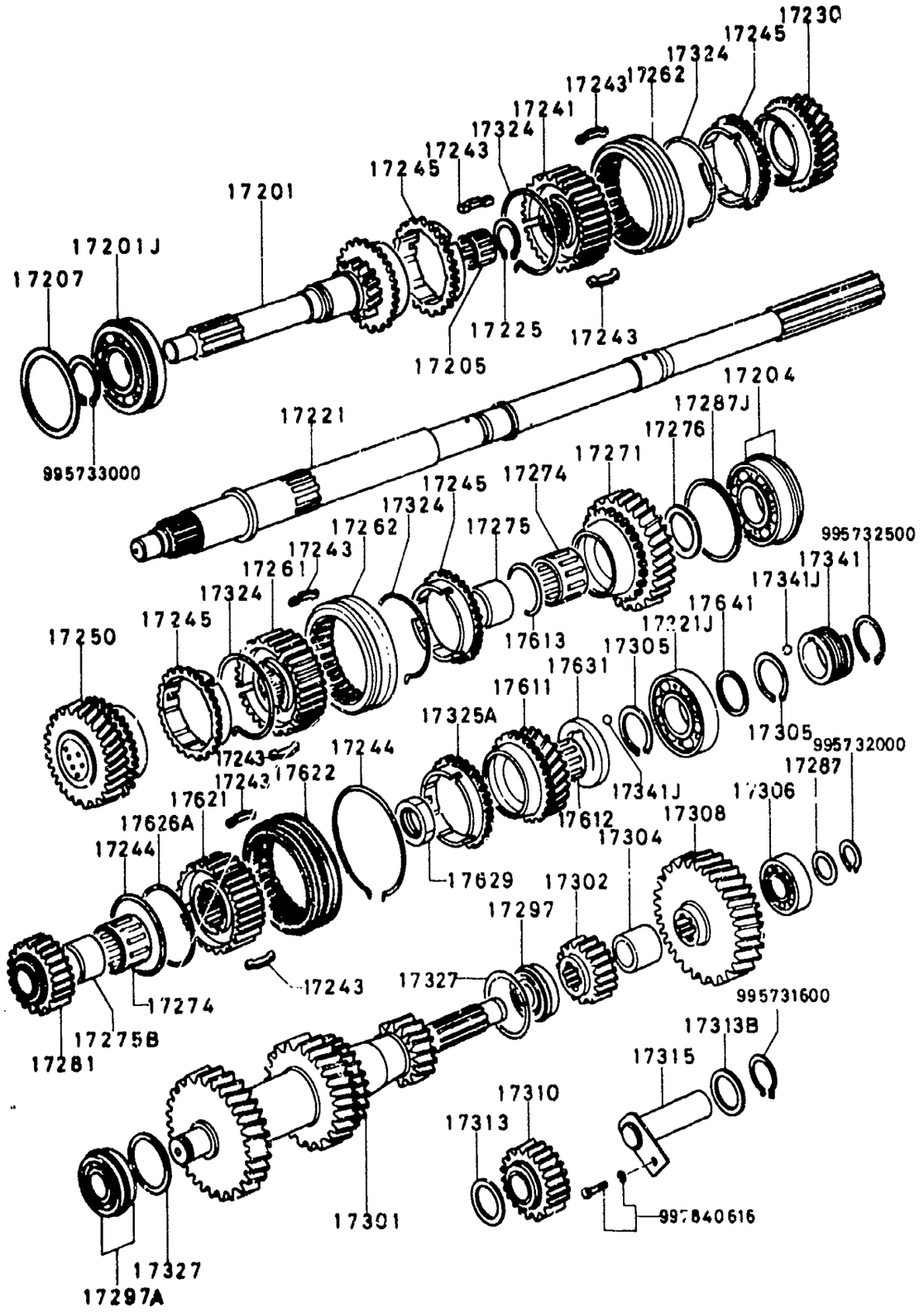

1710AA-5 T/MISSION GEAR (MANUAL, 5-SPEED)

D-CODE (Key No.)	PART NAME	PART No.	Qty.	MODEL/DESCRIPTION	VIN (Chassis No.)
17611	GEAR, OVER TOP MODERATEUR VITESSE ENGRANAJE, SOBRE MARCHA	8540-17-611	1		
17612	BEARING, NEEDLE ROULEMENT RODAMIENTO DE AGUJAS	8540-17-612	1		
17613	RING, RETAINING CERCLE D'ARRET	8540-17-613	1		
17621	HUB, CLUTCH PIGNON FIXE PATENTE DE EMBRAGUE	8601-17-621	1		
17622	SLEEVE, CLUTCH BAGUE D'EMBRAYAGE	3648-17-622A	1		SA22C .. 500001 -578960
		3648-17-622B	1		SA22C .. 578961-
17626A	RING, RETAINING CERCLE D'ARRET	3648-17-626	1		
17629	NUT, LOCK ECROU DE SERRAGE TUERCA, SEGURO	8601-17-629	1		
17631	WASHER, THRUST LOCK RONDELLE ARANDELA, CIERRE EMPUJE	0884-17-632A	1	(T=6.2)	SA22C .. 559740-
		0884-17-633A	1	(T=6.4)	
		0884-17-634A	1	(T=6.5)	
		0884-17-635A	1	(T=6.6)	
		0884-17-636A	1	(T=6.7)	SA22C .. 500001 -559739
17641	WASHER, ADJUST EPAISSEUR ARANDELA, AJUSTAR	0862-17-641	1	(T=1.9)	
		0862-17-642	1	(T=2.0)	

1710AA T/MISSION GEAR (MANUAL, 5-SPEED)

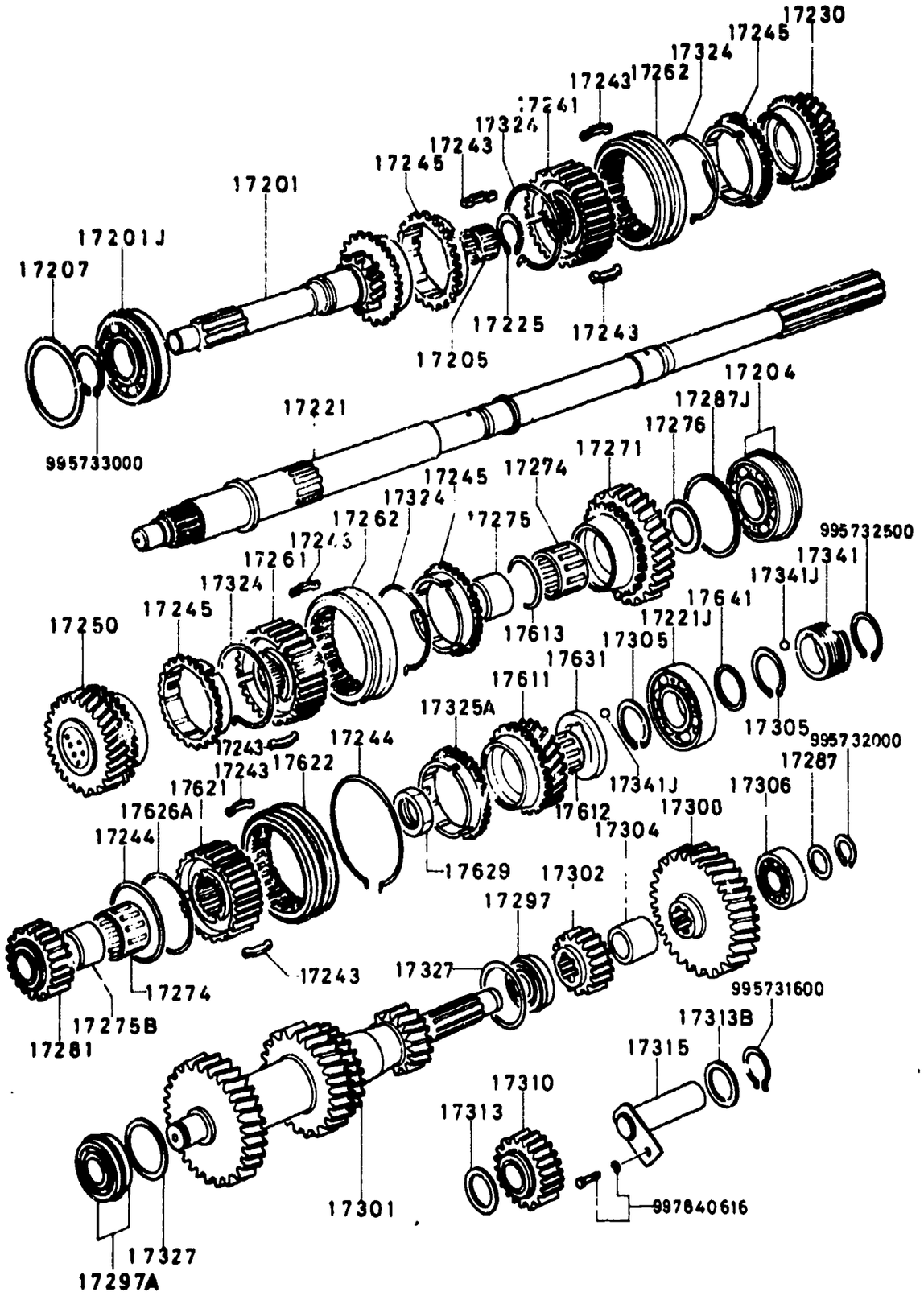

1710AA-6* T/MISSION GEAR (MANUAL, 5-SPEED)

D-CODE (Key No.)	PART NAME	PART No.	Qty.	MODEL DESCRIPTION	VIN (Chassis No.)
17641 CONT'D		0862-17-643	1	(T=2.1)	
		0862-17-644	1	(T=2.2)	

1720A CHANGE CONTROLS (MANUAL, 4-SPEED)

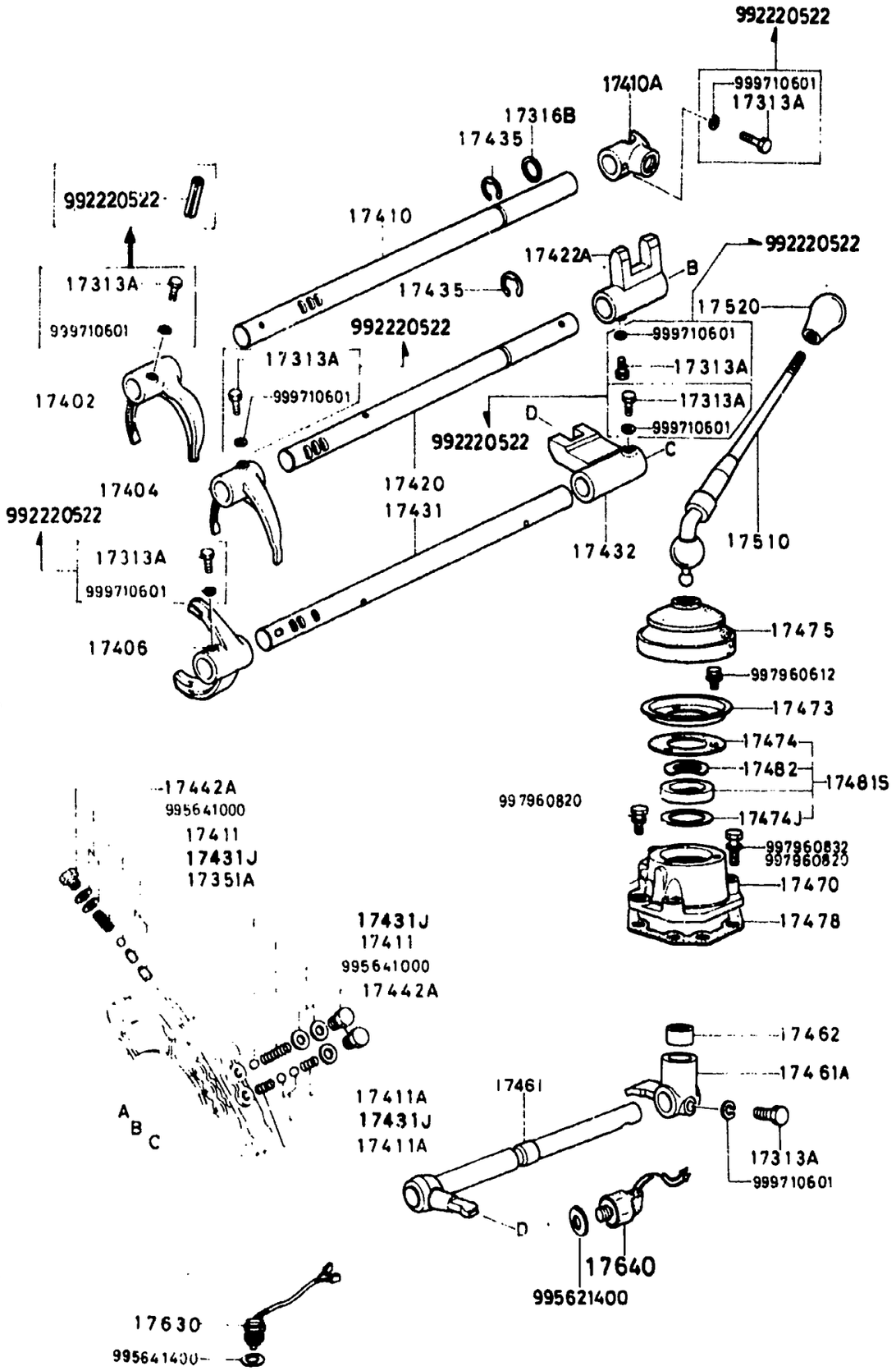

1720A-1 CHANGE CONTROLS (MANUAL, 4-SPEED)

D-CODE (Key No.)	PART NAME	PART No.	Qty.	MODEL DESCRIPTION	VIN (Chassis No.)
17313A	SCREW SET JEU DE VIS TORNILLOS,JGO.	0118-17-313	7		SA22C .. 500001 -583626
	<AN>	0118-17-313A	1		SA22C .. 583627-
17316B	SPACER,ADJUST RONDELLE DE REGLAGE	8867-17-316	1		
17351A	PIN,INTER LOCK CLAVETTE D'INTERDICTION PASADOR, SEGURO	0114-17-351	2		
17402	FORK,SHIFT(1ST&2ND) FOURCHETTE, VITESSE HORQUILLA DE CAMBIO	0290-17-402	1	(1ST & 2ND)	SA22C .. 500001 -583526
		8562-17-402	1	(1ST & 2ND)	SA22C .. 583527-
17404	FORK,SHIFT(3RD&4TH) FOURCHETTE, VITESSE HORQUILLA DE CAMBIO	1650-17-404	1	(3RD & 4TH) FED.	SA22C .. 500001 -583526
		8562-17-404	1	(3RD & 4TH) CANADA	SA22C .. 583527-
		8868-17-404	1	(3RD & 4TH) CALIF.	SA22C .. 500001 -583526
		8970-17-404	1	(3RD & 4TH) FED.	SA22C .. 583527-
17406	FORK,SHIFT FOURCHETTE, VITESSE HORQUILLA DE CAMBIO	3648-17-406	1	(REVERSE)	SA22C .. 500001 -583526
		8134-17-406	1	(REVERSE)	SA22C .. 583527-
17410	ROD,SHIFT(1ST&2ND) TIGE,CHANGEMENT VITESSES BASTON DE MANDO	8086-17-411	1	(1ST & 2ND)	SA22C .. 500001 -583526
		8562-17-411A		(1ST & 2ND)	

1720A CHANGE CONTROLS (MANUAL, 4-SPEED)

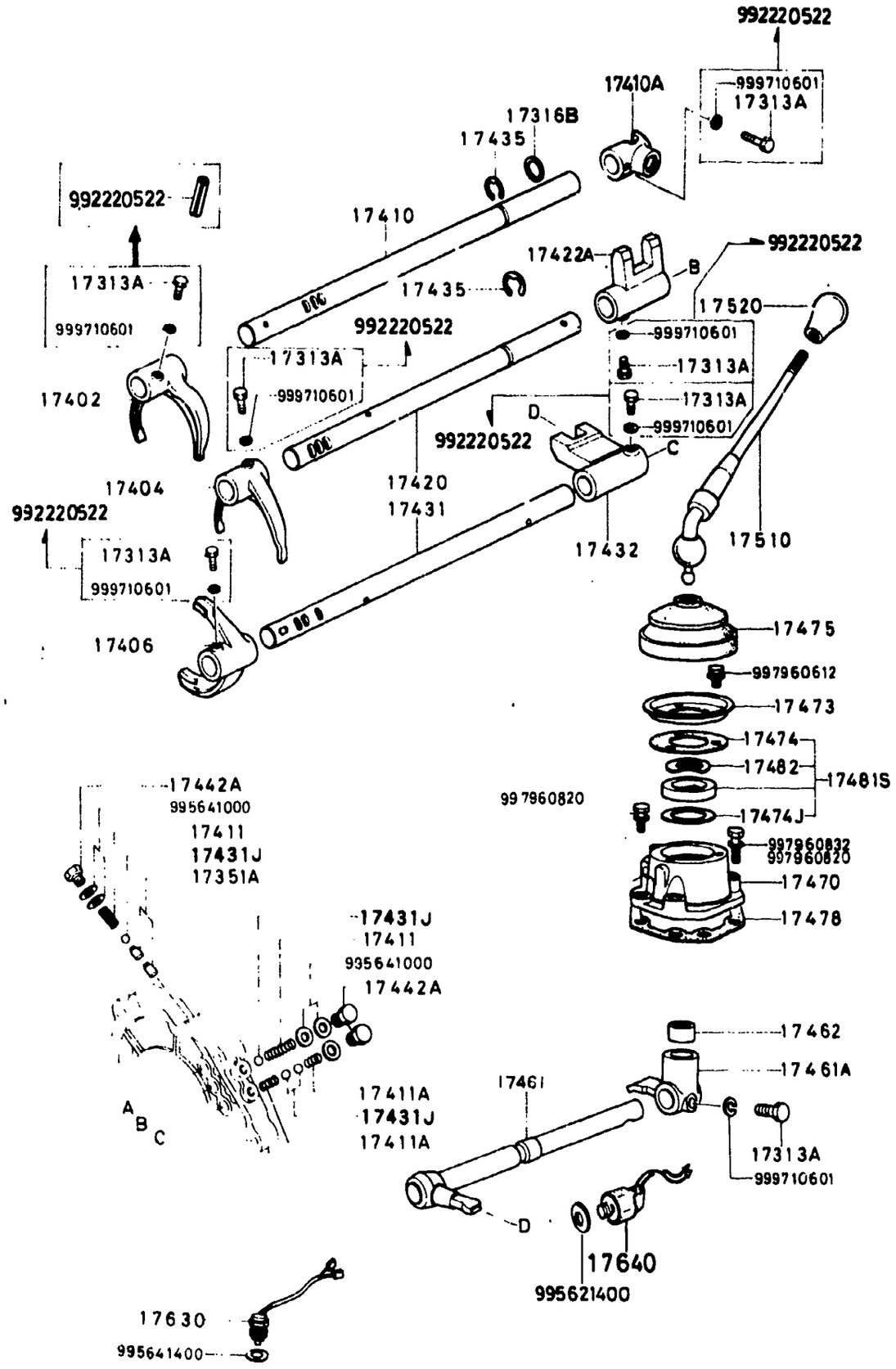

1720A-2 CHANGE CONTROLS (MANUAL, 4-SPEED)

D-CODE (Key No.)	PART NAME	PART No.	Qty.	MODEL DESCRIPTION	VIN (Chassis No.)
17410 CONT'D		8562-17-411A	1		SA22C .. 583527-
17410A	END, S/ROD(1ST&2ND) TIGE DE QUEUE	8134-17-412A	1		SA22C .. 583527-
		8601-17-412	1		SA22C .. 500001 -583526
17411	SPRING RESSORT RESORTE	0103-17-411	2		
17411A	SPRING RESSORT RESORTE	0014-17-411	2		
17420	ROD, SHIFT(3RD&4TH) TIGE, CHANGEMENT VITESSES BASTON DE MANDO	8086-17-421	1	(3RD & 4TH)	SA22C .. 500001 -583526
		8562-17-421	1	(3RD & 4TH)	SA22C .. 583527-
17422A	END, S/ROD(3RD&4TH) TIGE DE QUEUE	8134-17-422	1	(3RD & 4TH)	SA22C .. 583527-
		8601-17-422	1	(3RD & 4TH)	SA22C .. 500001 -583526
17431	ROD, SHIFT TIGE, CHANGEMENT VITESSES BASTON DE MANDO	8134-17-431	1	(REVERSE)	SA22C .. 583527 -606774
	<A>	*8134-17-431A	1	(REVERSE)	SA22C .. 606775-
		8601-17-431A	1	(REVERSE)	SA22C .. 500001 -583526
17431J	BALL, STEEL BILLE D'ACIER BOLA, ACERO	9961-12-500	4		
17432	END, SHIFT CHANGEMENT (ENBOUT) MARCHA FINAL	8540-17-432A	1	(REVERSE)	SA22C .. 500001

1720A CHANGE CONTROLS (MANUAL, 4-SPEED)

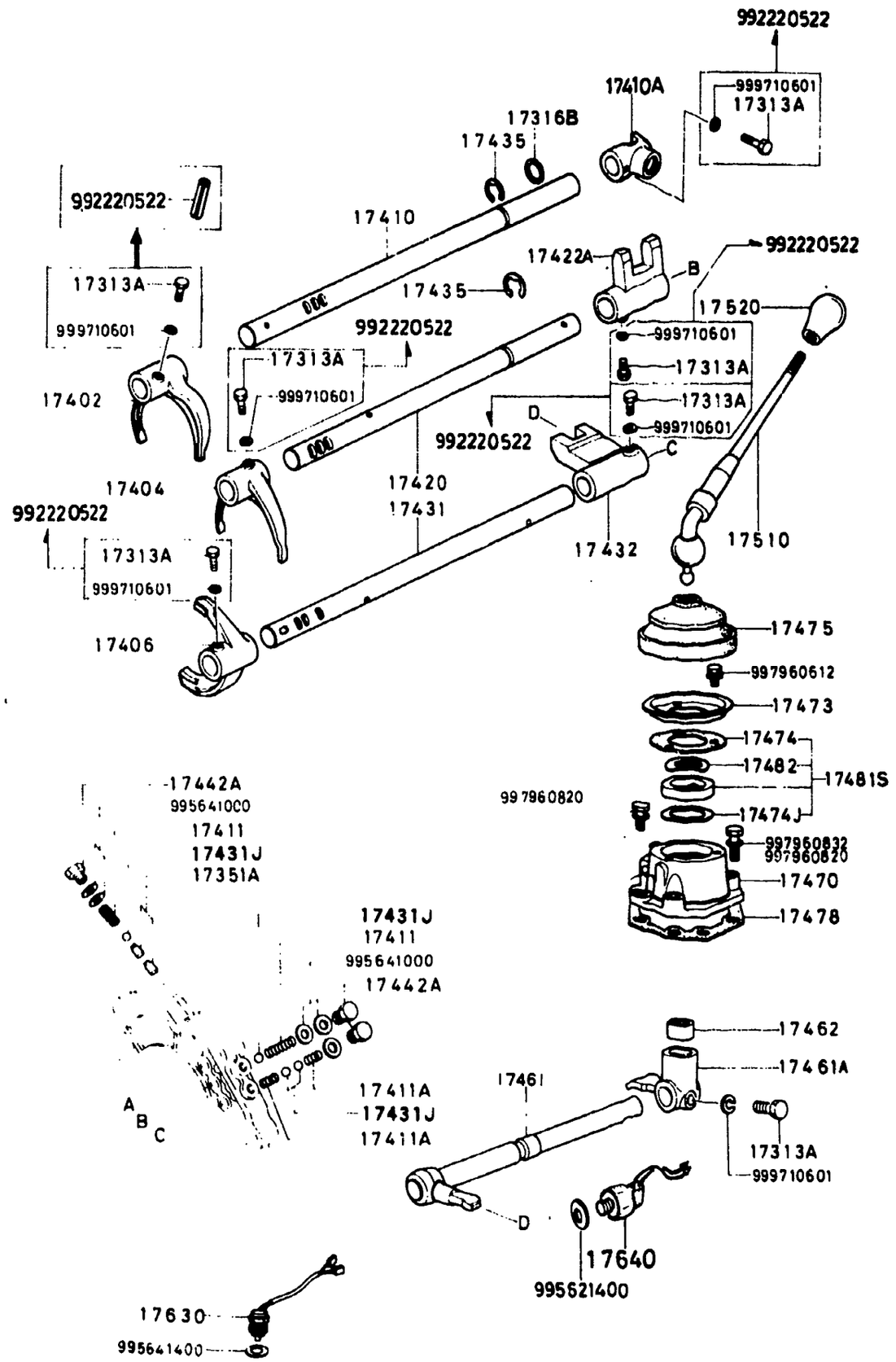

D-CODE (Key No.)	PART NAME	PART No.	Qty.	MODEL/DESCRIPTION	VIN (Chassis No.)
17432 CONT'D		8540-17-432A			-583526
		8540-17-432B	1	(REVERSE)	SA22C .. 583527 -606774
	<A>	*8540-17-432C	1	(REVERSE)	SA22C .. 606775-
17435	RING,SNAP CALE ANILLO,SEGURO	0821-17-435	3		
17442A	PLUG,CAP BOUCHON DE VERROUILLAGE TAPA	0259-17-441	3		SA22C .. 500001 -574179
		9951-01-000	3		SA22C .. 574180-
17461	LEVER,CONTROL LEVIER DE CONTROLE PALANCA DE CONTROL	8540-17-450	1		
17461A	END,CONTROL ROD LEVIER DE COMMANDE	8531-17-461	1		SA22C .. 500001 -597272
		8601-17-461A	1		SA22C .. 597273-
17462	SEAT,SPRING SIEGE DE RESSORT ASIENTO,RESORTE	0398-17-462A	1		
17470	CASE,CHANGE CONTROL LOGEMENT, LEVIER DE VITES CAJA,CONTROL CAMBIOS	8867-17-470	1		SA22C .. 500001 -510188
		8867-17-470A	1		SA22C .. 510189-
17473	PLATE,COVER COUVERCLE, PLATEAU PLACA CUBIERTA	0647-17-473	1		
17474	GASKET,COVER PLATE JOINT EMPAQUE, PLACA DE TAPA	0303-17-474	1		
17474J	SHIM,ADJUST EPAISSEUR LAINA,AJUSTE	9996-33-310	3	(T=0.1)	

1720A CHANGE CONTROLS (MANUAL, 4-SPEED)

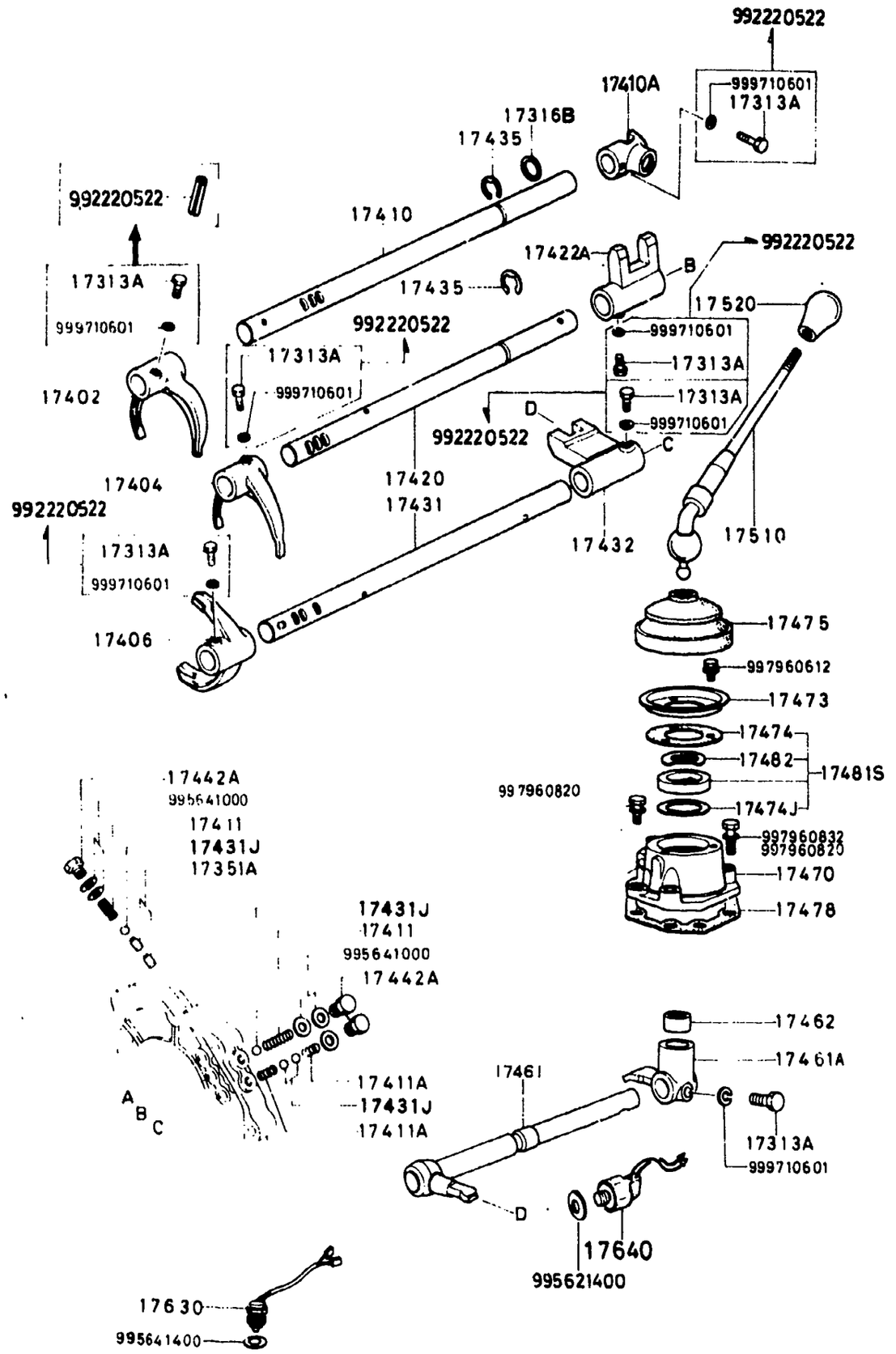

1720A-4* CHANGE CONTROLS (MANUAL, 4-SPEED)

D-CODE (Key No.)	PART NAME	PART No.	Qty.	MODEL DESCRIPTION	VIN (Chassis No.)
17474J CONT'D		9996-33-330	1		
17475	BOOT,DUST CACHE-POUSSIERE GUARDAPOLVO	8531-17-475	1		
17478	GASKET,CONTROL CASE JOINT EMPAQUE, CUBIERTA DE CONT	0271-17-478	1		
17481S	BUSH SET, CHANGE LEVER	0305-99-178	1		
17482	WASHER,WAVE	0303-17-482	1		
17510	LEVER,CHANGE LEVIER DE VITESSES PALANCA DE CAMBIO	8871-17-510	1		
17520	KNOB,CHANGE LEVER BOULE DE LEVIER DE VITESS PERILLA DE PALANCA DE CAM	1931-17-520	1	(LEATHERET)	SA22C .. 500001 -520637
		1931-17-520A	1	(LEATHERET)	SA22C .. 520638-
17630	SWITCH COMMUTATEUR INTERRUPTOR	1391-17-640	1	CALIF. 80 MODEL FED.	
17640	SWITCH,BACK UP LAMP COMMUTATEUR, FEU DE RECUL INTERRUPTOR,LAMPARA RETRO	1391-17-640	1		

1720AA CHANGE CONTROLS (MANUAL, 5-SPEED)

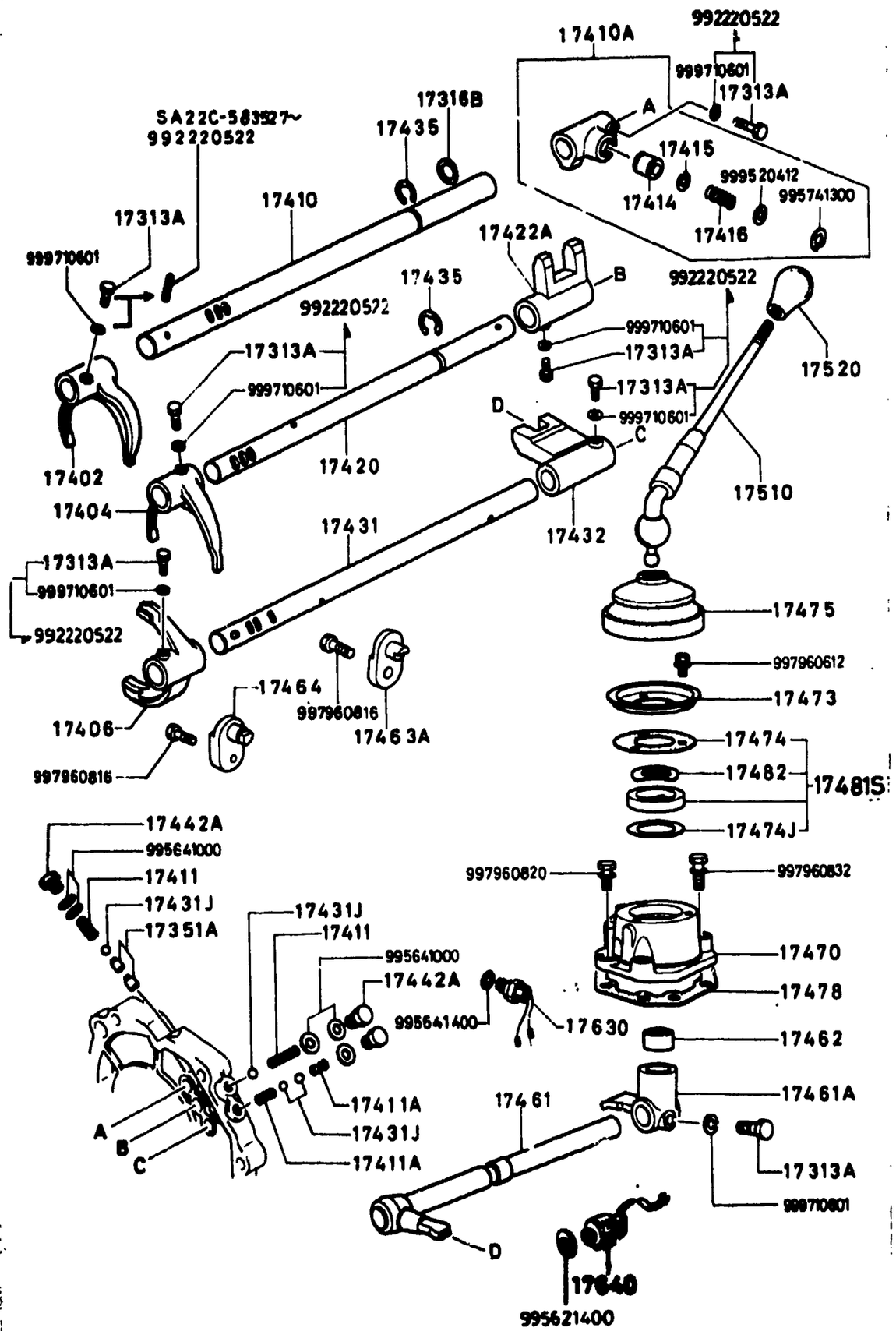

1720AA-1 CHANGE CONTROLS (MANUAL, 5-SPEED)

D-CODE (Key No.)	PART NAME	PART No.	Qty.	MODEL/DESCRIPTION	VIN (Chassis No.)
17313A	SCREW SET JEU DE VIS TORNILLOS,JGO.	0118-17-313	7		SA22C .. 500001 -583526
	<AN>	0118-17-313A	1		SA22C .. 583527-
17316B	SPACER,ADJUST RONDELLE DE REGLAGE	8086-17-316	1		
17351A	PIN,INTER LOCK CLAVETTE D'INTERDICTION PASADOR, SEGURO	0114-17-351	2		
17402	FORK,SHIFT(1ST&2ND) FOURCHETTE, VITESSE HORQUILLA DE CAMBIO	0290-17-402	1	(1ST & 2ND)	SA22C .. 500001 -583526
		8562-17-402	1	(1ST & 2ND)	SA22C .. 583527-
17404	FORK,SHIFT(3RD&4TH) FOURCHETTE, VITESSE HORQUILLA DE CAMBIO	1650-17-404	1	(3RD & 4TH) 79 MODEL FED. 79 MODEL CANADA 80 MODEL CANADA	SA22C .. 500001 -583526
		8562-17-404	1	(3RD & 4TH) 80 MODEL CANADA	SA22C .. 583527-
		8868-17-404	1	(3RD & 4TH) CALIF. 80 MODEL FED.	SA22C .. 500001 -583526
		8970-17-404	1	(3RD & 4TH) CALIF. 80 MODEL FED.	SA22C .. 583527-
17406	FORK,SHIFT FOURCHETTE, VITESSE HORQUILLA DE CAMBIO	3648-17-406	1	(OVER TOP & REVERSE)	SA22C .. 500001 -583526
		8134-17-406	1	(OVER TOP & REVERSE)	SA22C .. 583527-
17410	ROD,SHIFT(1ST&2ND) TIGE,CHANGEMENT VITESSES BASTON DE MANDO	8086-17-411	1	(1ST & 2ND)	SA22C .. 500001 -583526
		8562-17-411A		(1ST & 2ND)	

1720AA CHANGE CONTROLS (MANUAL, 5-SPEED)

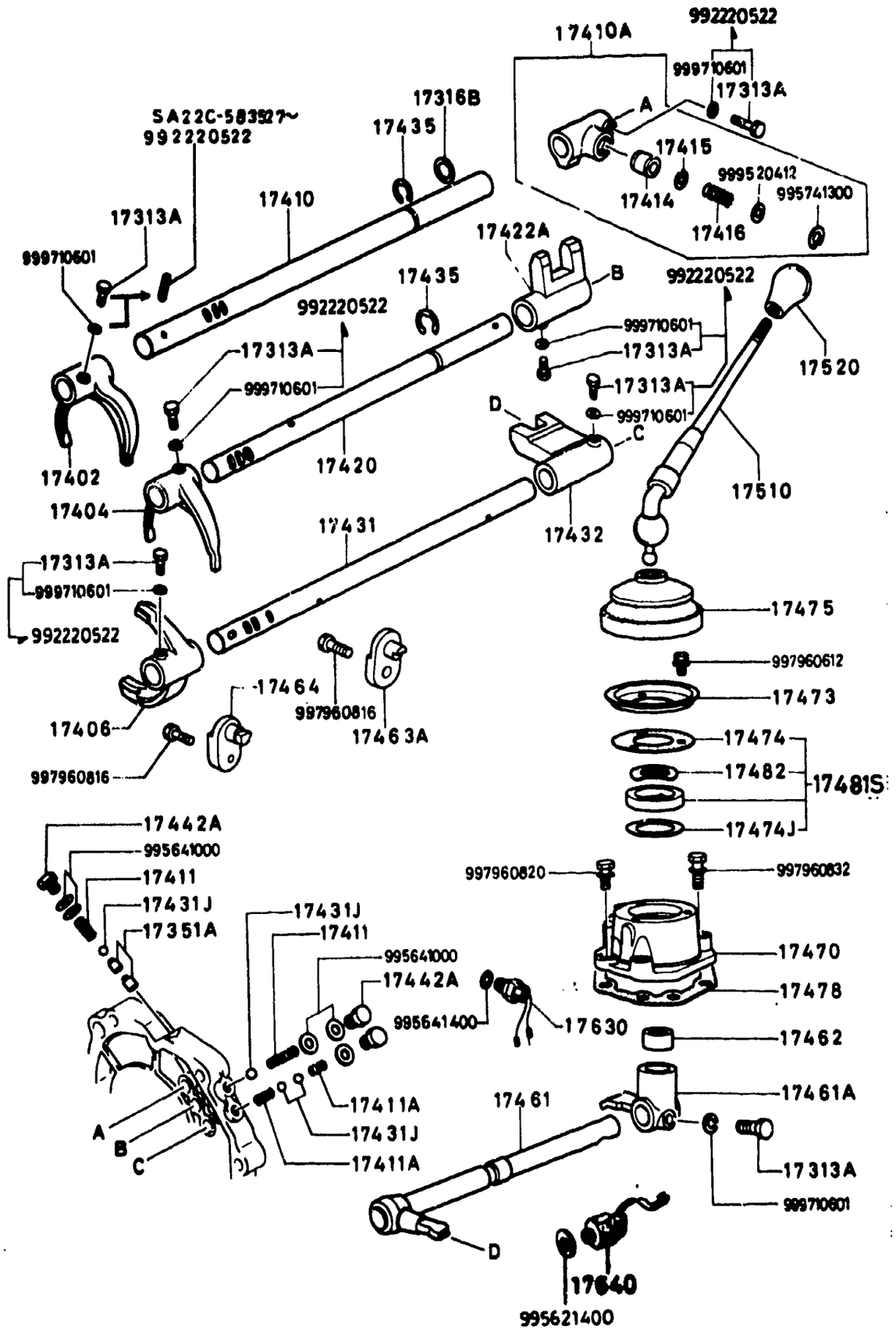

1720AA-2 CHANGE CONTROLS (MANUAL, 5-SPEED)

D-CODE (Key No.)	PART NAME	PART No.	Qty.	MODEL/DESCRIPTION	VIN (Chassis No.)
17410 CONT'D		8562-17-411A	1		SA22C .. -583527-
17410A	END,S/ROD(1ST&2ND) TIGE DE QUEUE	8134-17-410A	1	(1ST ■ 2ND)	SA22C .. 583527-
		8601-17-410	1	(1ST & 2ND)	SA22C .. 500001 -583526
17411	SPRING RESSORT RESORTE	0103-17-411	2		
17411A	SPRING RESSORT RESORTE	0014-17-411	2		
17414	PIN,BUSH BAGUE	3648-17-414	1		
17415	RING,RETAINING CERCLE D'ARRET	3648-17-415	1		
17416	SPRING RESSORT RESORTE	3648-17-416	1		
17420	ROD,SHIFT(3RD&4TH) TIGE,CHANGEMENT VITESSES BASTON DE MANDO	8086-17-421	1	(3RD & 4TH)	SA22C .. 500001 -583526
		8562-17-421	1	(3RD & 4TH)	SA22C .. 583527-
17422A	END,S/ROD(3RD&4TH) TIGE DE QUEUE	8134-17-422	1	(3RD ■ 4TH)	SA22C .. 583527-
		8601-17-422	1	(3RD & 4TH)	SA22C .. 500001 -583526
17431	ROD,SHIFT TIGE,CHANGEMENT VITESSES BASTON DE MANDO	8134-17-431	1	(OVER TOP & REVERSE)	SA22C .. 583527 -606774
	<A>	★8134-17-431A	1	(OVER TOP & REVERSE)	SA22C .. 606775-

1720AA CHANGE CONTROLS (MANUAL, 5-SPEED)

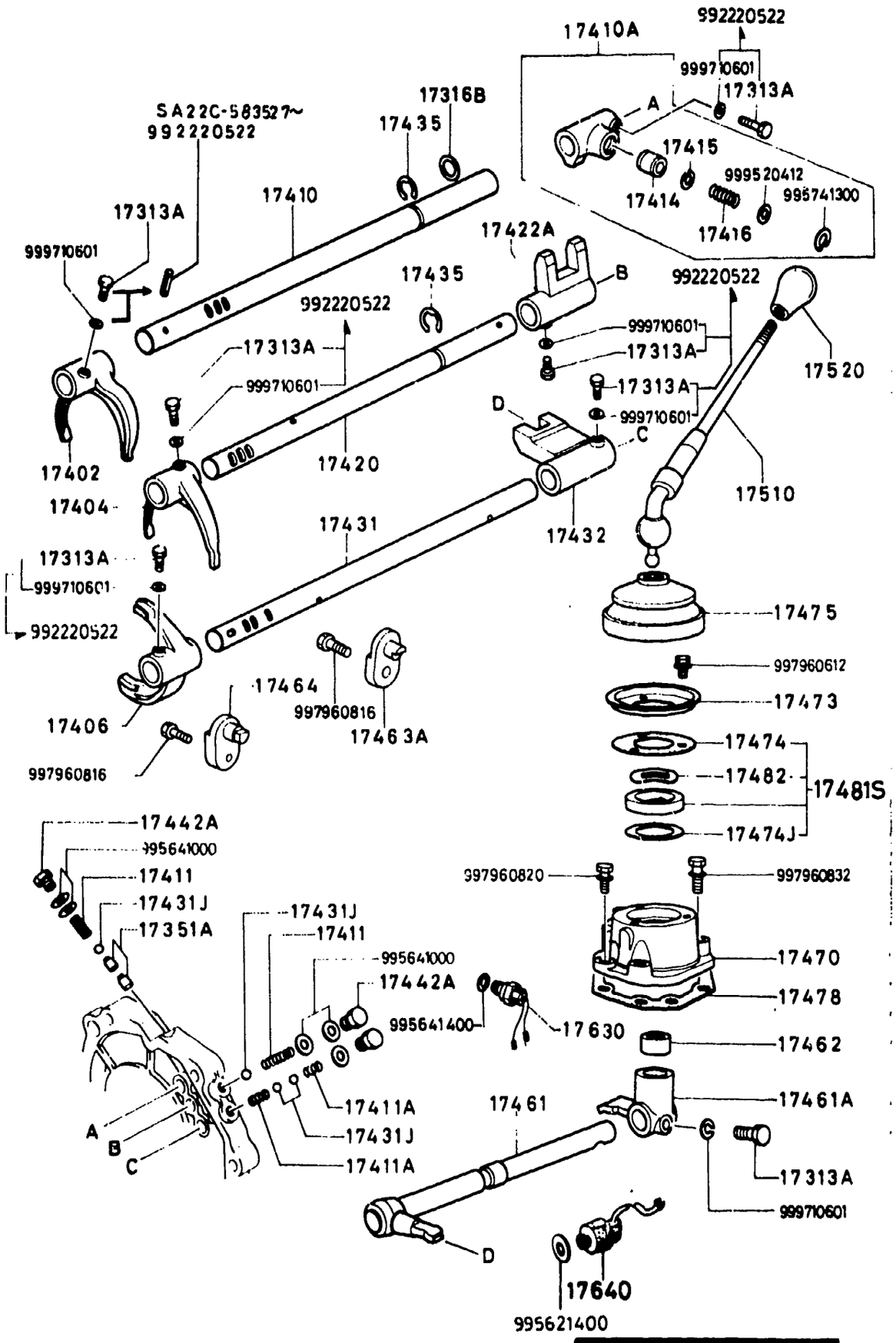

1720AA-3 CHANGE CONTROLS (MANUAL, 5-SPEED)

D-CODE (Key No.)	PART NAME	PART No.	Qty.	MODEL/DESCRIPTION	VIN (Chassis No.)
17431 CONT'D		8601-17-431A	1	(OVER TOP & REVERSE)	SA22C .. 500001 -583526
17431J	BALL,STEEL BILLE D'ACIER BOLA,ACERO	9961-12-500	4		
17432	END,SHIFT CHANGEMENT (ENBOUT) MARCHA FINAL	8540-17-432A	1	(OVER TOP & REVERSE)	SA22C .. 500001 -583526
		8540-17-432B	1	(OVER TOP & REVERSE)	SA22C .. 583527 -606774
	<A>	*8540-17-432C	1	(OVER TOP & REVERSE)	SA22C .. 606775-
17435	RING,SNAP CALE ANILLO,SEGURO	0821-17-435	3		
17442A	PLUG,CAP BOUCHON DE VERROUILLAGE TAPA	0259-17-441	3		SA22C .. 500001 -574179
		9951-01-000	3		SA22C .. 574180-
17461	LEVER,CONTROL LEVIER DE CONTROLE PALANCA DE CONTROL	8540-17-450	1		
17461A	END,CONTROL ROD LEVIER DE COMMANDE	8601-17-461	1		SA22C .. 500001 -597272
		8601-17-461A	1		SA22C .. 597273-
17462	SEAT,SPRING SIEGE DE RESSORT ASIENTO,RESORTE	0398-17-462A	1		
17463A	PIN,STOPPER GOUJON	3648-17-463A	1		SA22C .. 500001 -611387
	<A>	*3648-17-463B	1		SA22C .. 611388-
17464	PIN,STOPPER GOUJON	3648-17-464	1		SA22C .. 500001

1720AA CHANGE CONTROLS (MANUAL, 5-SPEED)

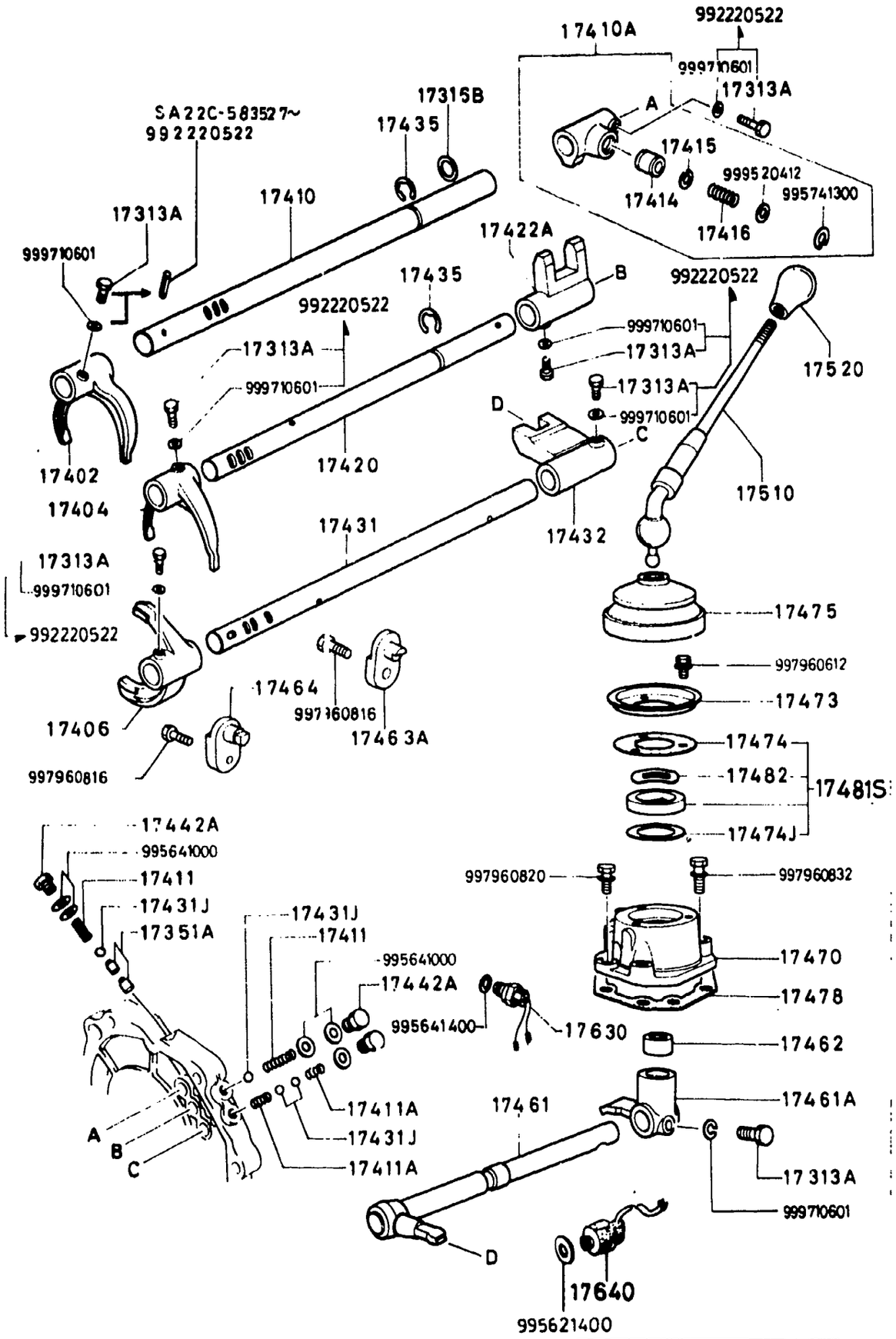

17 20AA-4 CHANGE CONTROLS (MANUAL, 5-SPEED)

D-CODE (Key No.)	PART NAME	PART No.	Qty.	MODEL DESCRIPTION	VIN (Chassis No.)
17464 CONT' D		3648-17-464			-611387
	<A >	*3648-17-464A	1		SA22C .. 611388-
17470	CASE,CHANGE CONTROL LOGEMENT, LEVIER DE VITES CAJA,CONTROL CAMBIOS	8871-17-470	1		SA22C .. 500001 -510188
	<AN>	8871-17-470A	1		SA22C .. 510189-
17473	PLATE,COVER COUVERCLE, PLATEAU PLACA CUBIERTA	0647-17-473	1		
17474	GASKET,COVER PLATE JOINT EMPAQUE, PLACA DE TAPA	0303-17-474	1		
17474J	SHIM,ADJUST EPAISSEUR LAINA,AJUSTE	9996-33-310	3	(T=0.1)	
		9996-33-330	1	(T=0.3)	
17475	BOOT,DUST CACHE-POUSSIERE GUARDAPOLVO	8531-17-475	1		
17478	GASKET,CONTROL CASE JOINT EMPAQUE, CUBIERTA DE CONT	0271-17-478	1		
17481S	BUSH SET,CHANGE	0305-99-178	1		
17482	WASHER,WAVE	0303-17-482	1		
17510	LEVER,CHANGE LEVIER DE VITESSES PALANCA DE CAMBIO	8871-17-510	1		
17520	KNOB,CHANGE LEVER BOULE DE LEVIER DE VITESS PERILLA DE PALANCA DE CAM	8562-17-520	1	(LEATHER)	SA22C .. 500001 -531148
		8562-17-520A	1	(LEATHER)	SA22C .. 531149 -598753
	<A >	8562-17-520B	1	(LEATHER)	SA22C .. 598754-

1720AA CHANGE CONTROLS (MANUAL, 5-SPEED)

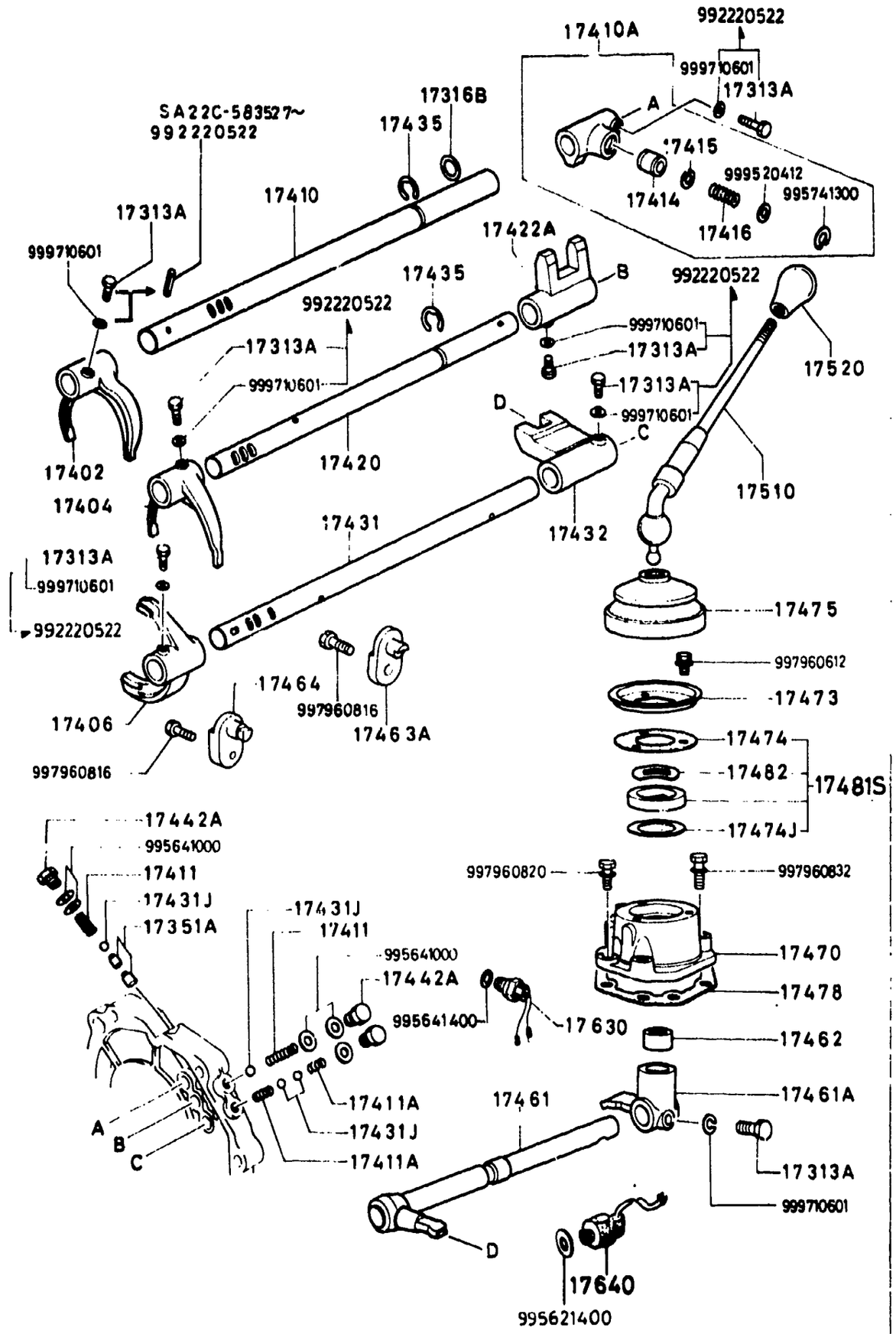

1720AA-5* CHANGE CONTROLS (MANUAL, 5-SPEED)

D-CODE (Key No.)	PART NAME	PART No.	Qty.	MODEL DESCRIPTION	VIN (Chassis No.)
17520 CONT'D		8562-17-520B			
	BLACK	00			
	BROWN	23			
		8871-17-520	1	(PLASTICS)	SA22C .. 500001 -531148
		8871-17-520A	1	(PLASTICS)	SA22C .. 531149-
17630	SWITCH COMMUTATEUR INTERRUPTOR	1391-17-640	1	CALIF. 80 MODEL FED.	
17640	SWITCH,BACK UP LAMP COMMUTATEUR, FEU DE RECUL INTERRUPTOR,LAMPARA RETRO	0376-17-640A	1	CALIF. 80 MODEL FED.	
		1391-17-640	1		

SECTION NUMBER INDEX (ENGINE)

STARTING LOCATION	SECTION No.	SECTION NAME
1–C2	1000A	SHORT ENGINE & GASKET SET
1–D2	1030A	ROTOR HOUSING
1–G2	1040A	HOUSING (FRONT & REAR)
1–C3	1100A	ECCENTRIC SHAFT & FLYWHEEL
1–F3	1110A	ROTOR
1–C4	1300A	IN. MANIFOLD
1–D4	1310A	THERMAL REACTOR
1–E4	1320A	FUEL SYSTEM
1–G4	1330A	AIR CLEANER
1–H4	1350A	STARTING ASSIST SYSTEM
1–I4	1360A	CARBURETOR
1–F6	1371A	EMISSION CONTROLS (AIR PUMP & CONTROL VALVE)
1–H6	1380A	EMISSION CONTROLS (EX. SIDE)
1–C8	1400A	OIL PUMP & FILTER
1–F8	1500A	COOLING SYSTEM
1–K8	1600A	CLUTCH (MANUAL)
1–C9	1700A	T/MISSION CASE (MANUAL)
1–G9	1710A	T/MISSION GEAR (MANUAL)
1–E10	1720A	CHANGE CONTROLS (MANUAL)
1–C11	1800A	ELECTRICAL SYSTEM (ENGINE)
1–H11	1820A	DISTRIBUTOR
1–L11	1830A	ALTERNATOR
1–D12	1840A	STARTER
1–H12	1850A	BATTERY & CABLES
1–C13	1910A	CONVERTER, OIL PUMP & PIPING (AUTOMATIC T/MISSION)
1–F13	1920A	CASE & MAIN CONTROLS (AUTOMATIC T/MISSION)
1–K13	1930A	CLUTCH & PLANETARY GEAR (AUTOMATIC T/MISSION)
1–D14	1940A	LOW, REVERSE & GOVERNOR (AUTOMATIC T/MISSION)
1–G14	1950A	MANUAL LINKAGE (AUTOMATIC T/MISSION)

THE FRAMES IN THIS COLUMN INDICATE :

1–C11	1800A	ELECTRICAL SYSTEM (ENGINE)
1–H11	1820A	DISTRIBUTOR (1979 MODEL)
1–J11	1820AA	DISTRIBUTOR (1980 MODEL)
1–L11	1830A	ALTERNATOR (ALL 1979 MODELS & 1980 CANADA A/T)
1–N11	1830AA	ALTERNATOR (ALL 1980 MODELS EXCEPT CANADA A/T)

© 1983 Toyo Kogyo Co., Ltd.
MAY 1983

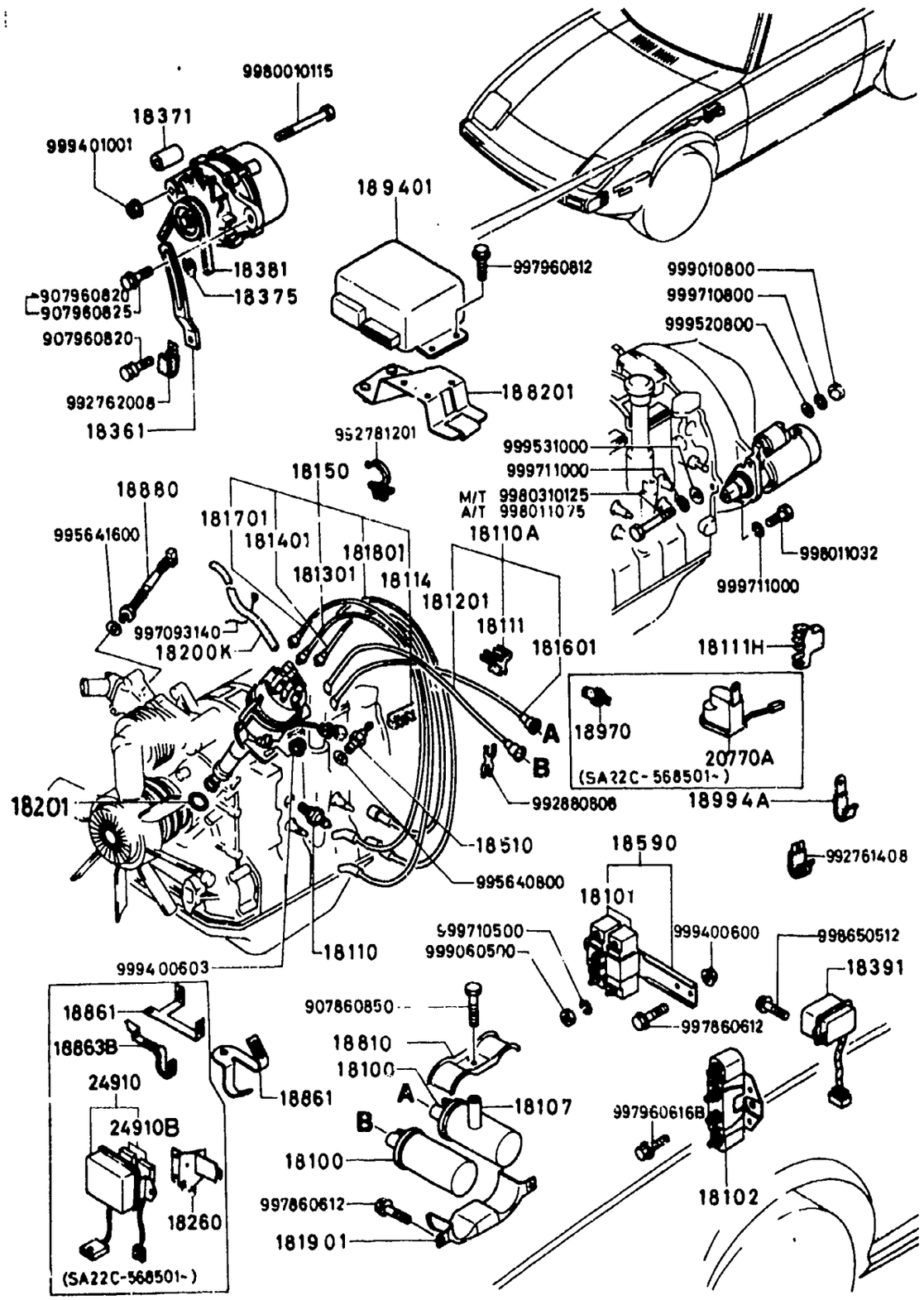

1800A-1 ELECTRICAL SYSTEM (ENGINE)

D-CODE (Key No.)	PART NAME	PART No.	Qty.	MODEL/DESCRIPTION	VIN (Chassis No.)
18100	COIL,IGNITION BOBINE D'ALLUMAGE BOBINA	8245-18-100	2	80 MODEL	SA22C .. 568501-
		*8871-18-100	2	79 MODEL	SA22C .. 500001 -568500
18101	RESISTOR RHEOSTAT RESISTENCIA	0866-18-101	2	79 MODEL	SA22C .. 500001 -568500
18102	RESISTOR RHEOSTAT RESISTENCIA	8872-18-101A	1	79 MODEL	SA22C .. 500001 -568500
18107	PIPE CONDUIT TUBO	0823-18-107	1	79 MODEL	SA22C .. 500001 -568500
		8245-18-107	1	80 MODEL	SA22C .. 568501-
18110	PLUG,SPARK BOUGIE BUJIA	3648-18-600	4	(BR7ET NGK) (W22EBR DENSO)	
		3649-18-600	4	(BR8ET NGK) 80 MODEL	SA22C .. 568501-
		3743-18-600	4	(W22EB DENSO) (B7ET NGK) 79 MODEL	SA22C .. 500001 -568500
		8344-18-600	4	(BR9ET NGK) 80 MODEL	SA22C .. 568501-
		8345-18-600	4	(W27EBR DENSO) 80 MODEL	SA22C .. 568501-
18110A	CORD,HIGH TENSION FAISCEAU,HAUTE TENSION CABLE ALTA TENSION	8871-18-110A	1		SA22C .. 500001 -554324
	<A>	8871-18-110B	1		SA22C .. 554325 -597272
18111	SUPPORTER SUPPORT SOPORTE	3648-18-111	1		SA22C .. 500001 -547088

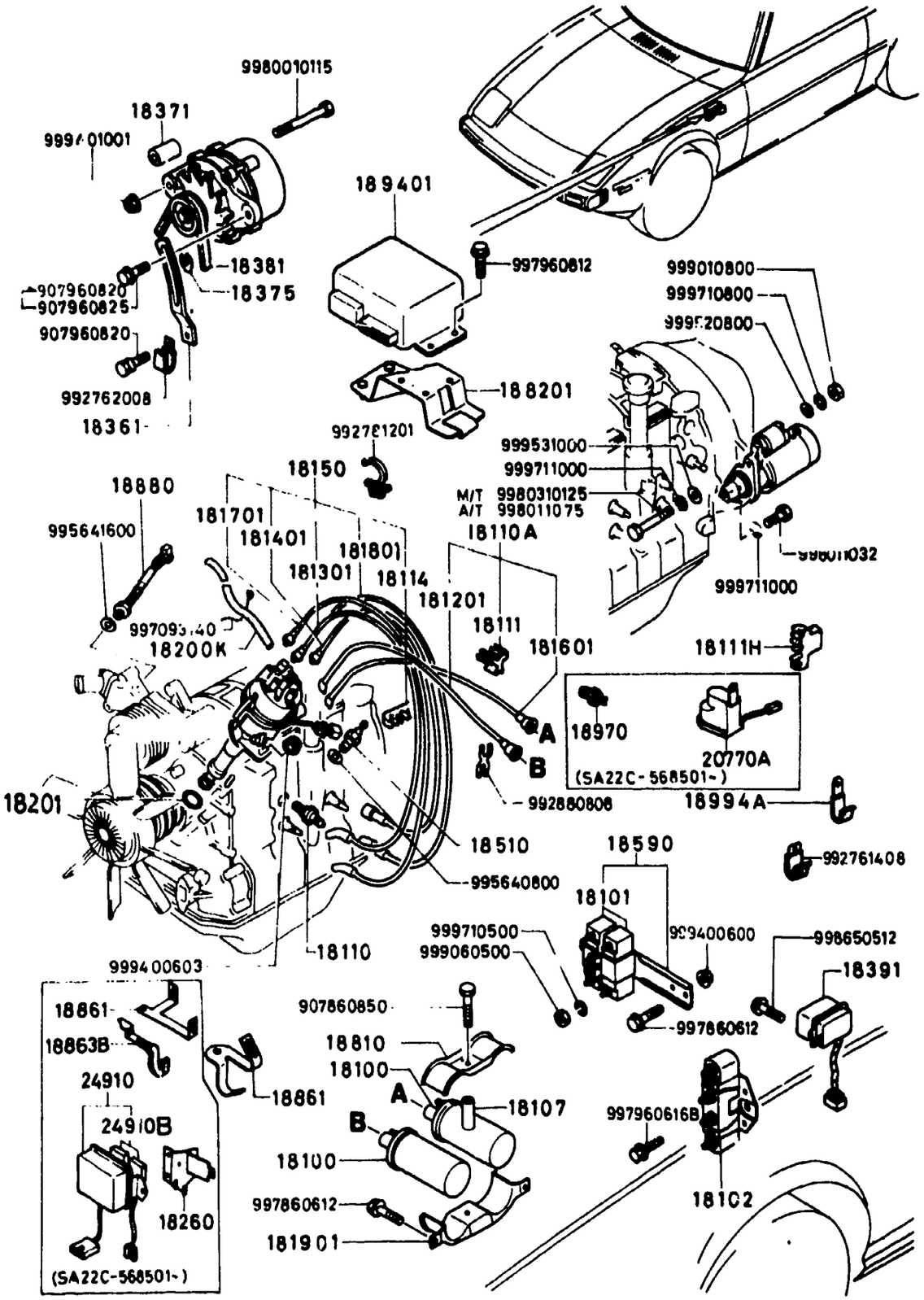

D-CODE (Key No.)	PART NAME	PART No.	Qty.	MODEL / DESCRIPTION	VIN (Chassis No.)
18111 CONT'D		3648-18-111A	1		SA22C .. 547089 -597272
18111H	SUPPORTER SUPPORT SOPORTE	8871-18-111	1		SA22C .. 500001 -541116
	<A >	8871-18-111A	1		SA22C .. 541117-
18114	SUPPORTER SUPPORT SOPORTE	0820-18-114	2		
181201	CORD,HIGH TENSION FAISCEAU, HAUTE TENSION CABLE ALTA TENSION	1480-18-120A	1		SA22C .. 597273-
		8871-18-120A	1		SA22C .. 500001 -597272
181301	CORD,HIGH TENSION <A > FAISCEAU, HAUTE TENSION CABLE ALTA TENSION	1480-18-130A	1	80 MODEL	SA22C .. 597273 -627592
	<A >*	1480-18-130B	1	80 MODEL	SA22C .. 627593-
		8248-18-130	1	80 MODEL	SA22C .. 568500 -597272
		8871-18-130	1	79 MODEL	SA22C .. 500001 -568500
181401	CORD,HIGH TENSION FAISCEAU, HAUTE TENSION CABLE ALTA TENSION	8248-18-140	1	80 MODEL	SA22C .. 565501 -627592
	<A >*	8248-18-140A	1	80 MODEL	SA22C .. 627593-
		8871-18-140	1	79 MODEL	SA22C .. 500001 -568500
18150	CORD,HIGH TENSION FAISCEAU, HAUTE TENSION CABLE ALTA TENSION	8248-18-150	1	80 MODEL	SA22C .. 568501 -627592
	<A >*	8248-18-150A	1	80 MODEL	SA22C .. 627593-
		8871-18-150A	1	79 MODEL	SA22C .. 500001

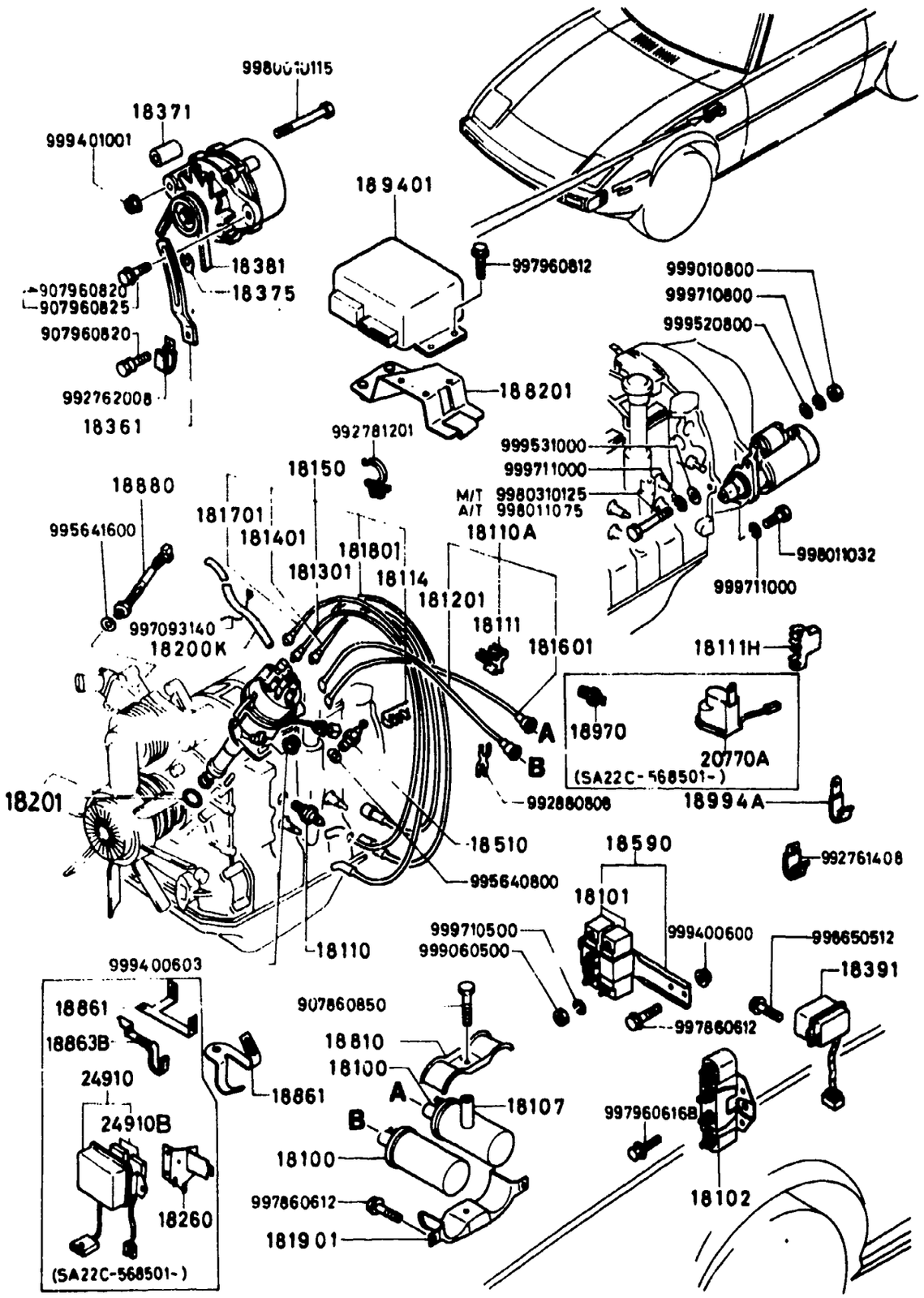

D-CODE (Key No.)	PART NAME	PART No.	Qty.	MODEL DESCRIPTION	VIN (Chassis No.)
18150 CONT'D		8871-18-150A			-568500
181601	CORD,HIGH TENSION FAISCEAU, HAUTE TENSION CABLE ALTA TENSION	1480-18-160A	1		SA22C .. 597273-
		8871-18-160A	1		SA22C .. 500001 -597272
181701	CORD,HIGH TENSION <A > FAISCEAU, HAUTE TENSION CABLE ALTA TENSION	1480-18-170A	1	80 MODEL	SA22C .. 597273 -627592
	<A >*	1480-18-170B	1	80 MODEL	SA22C .. 627593-
		8248-18-170	1	80 MODEL	SA22C .. 568501 -597272
		8871-18-170A	1	79 MODEL	SA22C .. 500001 -568500
181801	CORD,HIGH TENSION FAISCEAU, HAUTE TENSION CABLE ALTA TENSION	8871-18-180	1		
181901	BRKT.,IGNITION COIL FIXATION, BOBINE SOPORTE,BOBINA DE ENCENDI	8871-18-810A	1		
18200K	TUBE,VACUUM RACCORD, CAPSULE A DEPRES TUBO,VACIO	9935-10-4130	1 2	(ORD. BY 9935104999) A/T M/T	
18201	RING,'O' JOINT 'O' SELLO DE GOMA 'O'	9954-10-350	1		
18260	BRKT.,IGNITER ATTACHE,DISPOSITIF D'ALLU SOPORTE,DISPOSITIVO DE EN	8248-18-260A	1	80 MODEL	SA22C .. 568501-
18361	STRAP,ALTERNATOR ATTACHE ALTERNATEUR FLEJE,ALTERNADOR	1881-18-361A	1		
18371	BRACKET,ALTERNATOR ATTACHE, ALTERNATEUR SOPORTE,ALTERNADOR	1757-18-311	1		
18375	SHIM EPAISSEUR LAINA	0222-18-375	1	(T=0.3)	

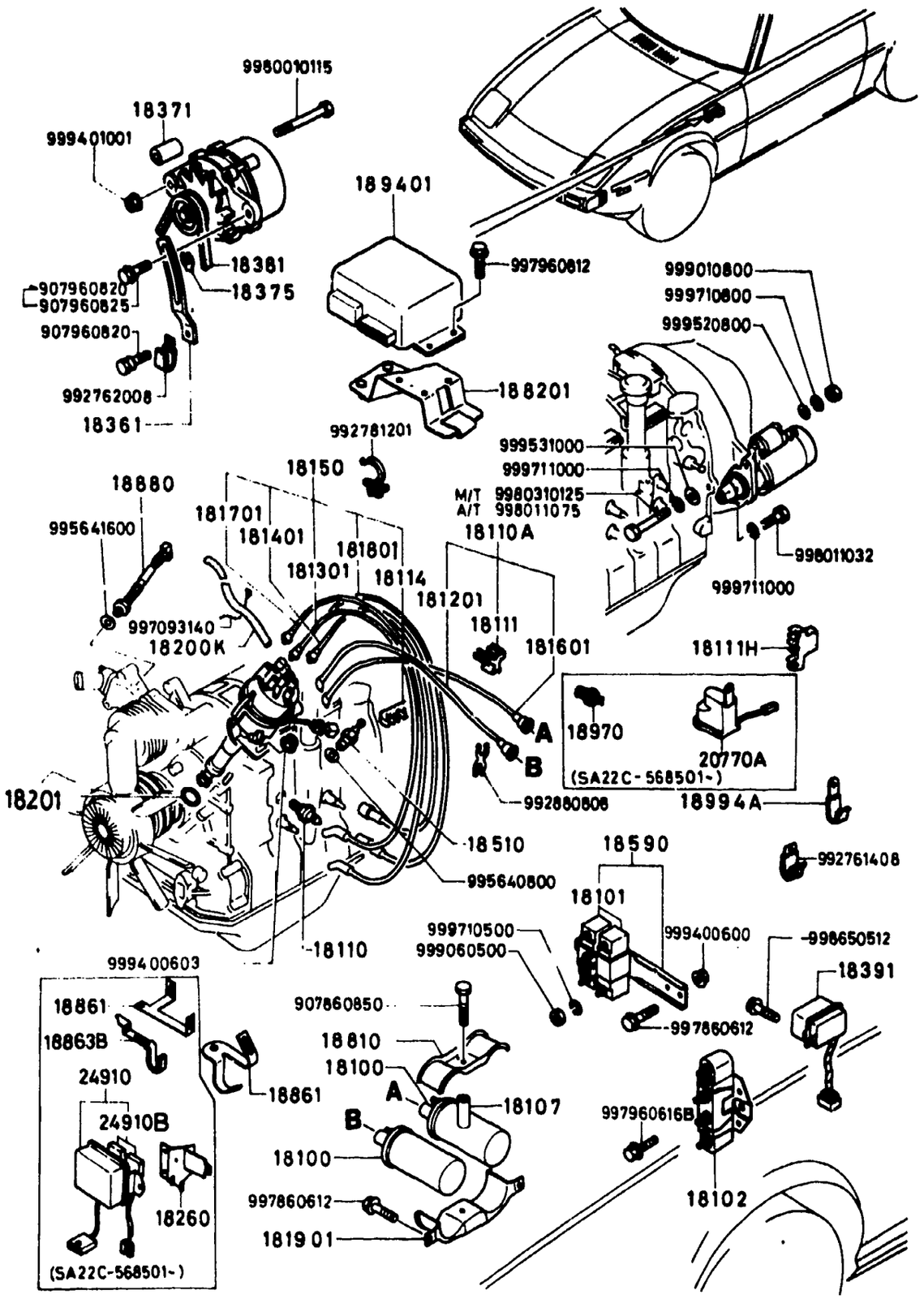

D-CODE (Key No.)	PART NAME	PART No.	Qty.	MODEL/DESCRIPTION	VIN (Chassis No.)
18375 CONT'D		0222-18-376	1	(T=0.5)	
		0222-18-377	1	(T=0.7)	
18381	BELT,'V' COURROIE CORREA EN 'V'	8871-18-381	1		
18391	REGULATOR MECANISME REGULADOR	0453-18-391	1	79 MODEL	SA22C .. 500001 -568500
18510	UNIT,HEAT GAUGE JAUGE MANOMETRO, COMJMTO	8712-18-510	1		
18590	BRACKET,RESISTOR SUPPORT RESISTANCE	8871-18-590A	1	79 MODEL	SA22C .. 500001 -568500
18810	BRACKET,IGNITION FIXATION, BOBINE SOPORTE,BOBINA DE ENCENDI	8871-18-106	1		SA22C .. 500001 -520637
	<A>	8871-18-106A	1		SA22C .. 520638 -541367
	<A>	8871-18-106B	1		SA22C .. 541368 -583261
	<A>	8871-18-106C	1		SA22C .. 583262-
188201	BRACKET,CONTROL UNIT SUPPORT	8871-18-820A	1		
18861	CLIP,VALVE WIRING CLIPS	8341-18-861A	1	80 MODEL	SA22C .. 563501-
		8871-18-861	1	79 MODEL	SA22C .. 500001 -563500
18863B	CLIP ATTACHE PRENSA TRABA GAZA	8156-18-863A	1	80 MODEL	SA22C .. 568501 -597272
18880	SWITCH,TEMP INTERRUPTEUR, HUILE INTERRUPTOR,ACEITE	1881-18-880A	1	79 MODEL	SA22C .. 500001 -568500
		8341-18-880	1	80 MODEL	SA22C ..

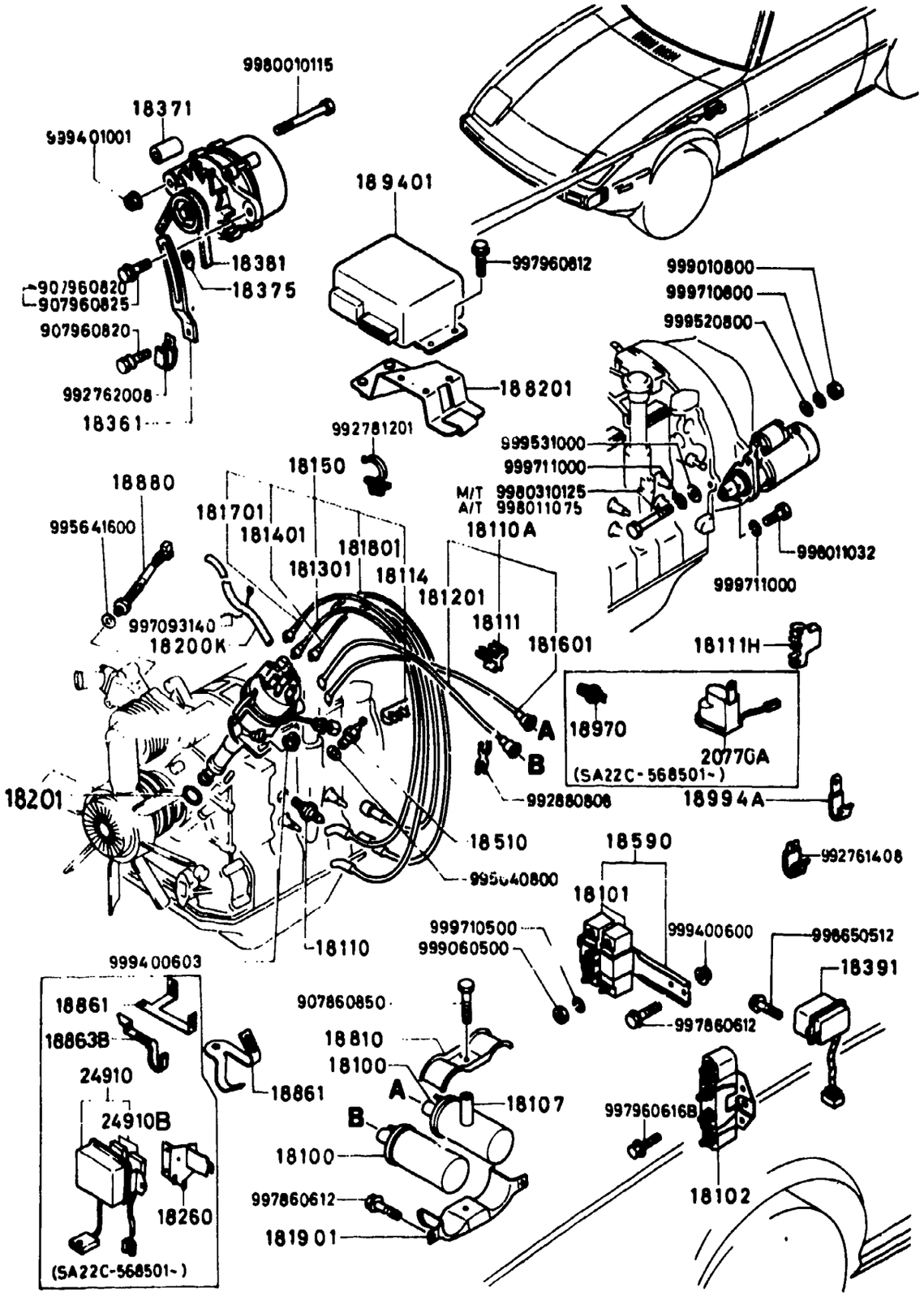

1800A-5* ELECTRICAL SYSTEM (ENGINE)

D-CODE (Key No.)	PART NAME	PART No.	Qty.	MODEL DESCRIPTION	VIN (Chassis No.)
18880 CONT'D		8341-18-880			568501-
189401	CONTROL UNIT COMMANDE(ENSEMBLE)	8341-18-940	1	80 MODEL FED.	SA22C .. 568501-
		8344-18-940	1	80 MODEL CALIF. M/T	SA22C .. 568501-
		8345-18-940	1	80 MODEL CALIF. A/T	SA22C .. 568501-
		*8553-18-940C	1	80 MODEL CANADA	SA22C .. 568501-
		8868-18-940D	1	79 MODEL CALIF.	SA22C .. 500001 -568500
		8871-18-940A	1	79 MODEL FED. 79 MODEL CANADA	SA22C .. 500001 -563500
18970	SWITCH COMMUTATEUR INTERRUPTOR	8341-18-970	1	80 MODEL FED.	SA22C .. 568501-
18994A	CLIP,ENGINE HARNESS CLIPS CABLAGE MOTEUR	1820-18-994	1	80 MODEL	SA22C .. 568501-
		1820-18-994A	1	79 MODEL	SA22C .. 500001 -568500
20770A	SWITCH,A.L.C.	8341-20-770	1	80 MODEL FED. M/T	SA22C .. 568501-
24910	IGNITER SET <A> DISPOSITIF D'ALLUMAGE	*8182-18-250	1	80 MODEL CANADA	SA22C .. 612776-
		8245-18-250	1	80 MODEL CANADA	SA22C .. 568501 -612775
		8341-18-250	1	80 MODEL FED. 80 MODEL CALIF.	SA22C .. 568501-
24910B	IGNITER	8173-24-910	2	80 MODEL	SA22C .. 568501 -612775
		*8182-24-910	2	80 MODEL	SA22C .. 612776-

1820A DISTRIBUTOR (1979 MODEL)

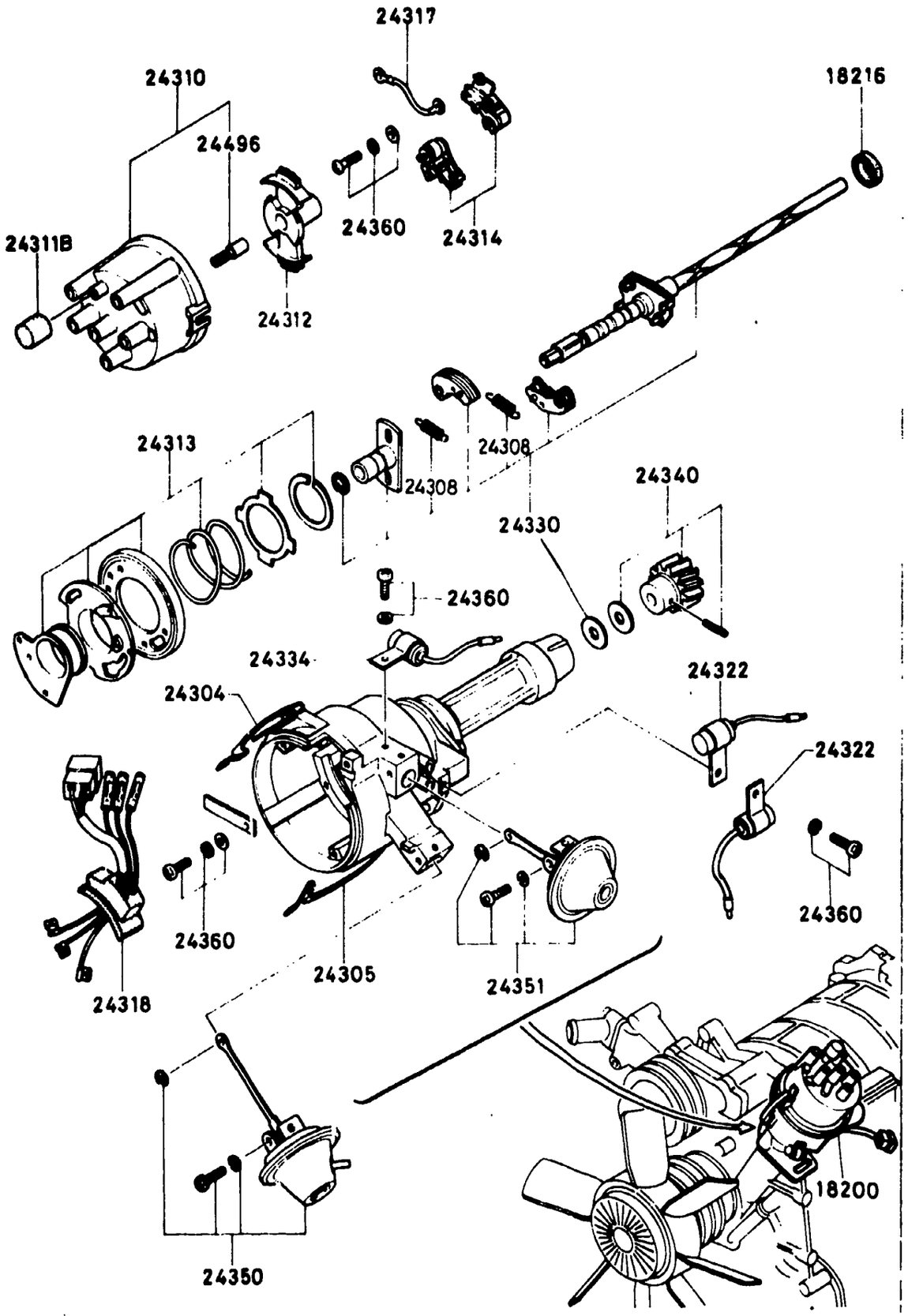

1820A-1 DISTRIBUTOR (1979 MODEL)

D-CODE (Key No.)	PART NAME	PART No.	Qty.	MODEL DESCRIPTION	VIN (Chassis No.)
18200	DISTRIBUTOR DISTRIBUTEUR DISTRIBUIDOR	8826-18-200A	1	M/T	
		8827-18-200A	1	A/T	
18216	SEAL,OIL ARRET D'HUILE RETEN,ACEITE	0107-18-216A	1		
24304	CLAMP CRAMPON PRENSA	3648-24-304	1		
24305	CLAMP CRAMPON PRENSA	3648-24-305	1		
24308	SPRING SET JEU DE RESSORTS RESORTE,JUEGO	8555-24-308	1		
24310	CAP BOUCHON TAPA	1757-24-310	1		
24311B	CAP,RUBBER BOUCHON DE CAOUTCHOUC TAPON DE HULE	1757-24-311	1		
24312	ROTOR ROTOR ROTOR	3648-24-303	1		
24313	BASE,BREAKER SUPPORT,RUPTEUR BASE,INTERRUPTOR	8761-24-323	1	M/T	SA22C .. 500001- SA22C .. 500001 -522141
			1	A/T	
		8872-24-323	1	A/T	SA22C .. 522142-
24314	SUPPORT,ARM RUPTEUR SOPORTE,BRAZO	1757-24-314	2		
24317	WIRE,LEAD-DIST. FIL DE CONTACT CABLE,PRINCIPAL	1757-24-317	2		
24318	WIRE,LEAD-DIST. FIL DE CONTACT CABLE,PRINCIPAL	8555-24-319	1		
24322	CONDENSER CONDENSATEUR	1757-24-322	2		

1820A DISTRIBUTOR (1979 MODEL)

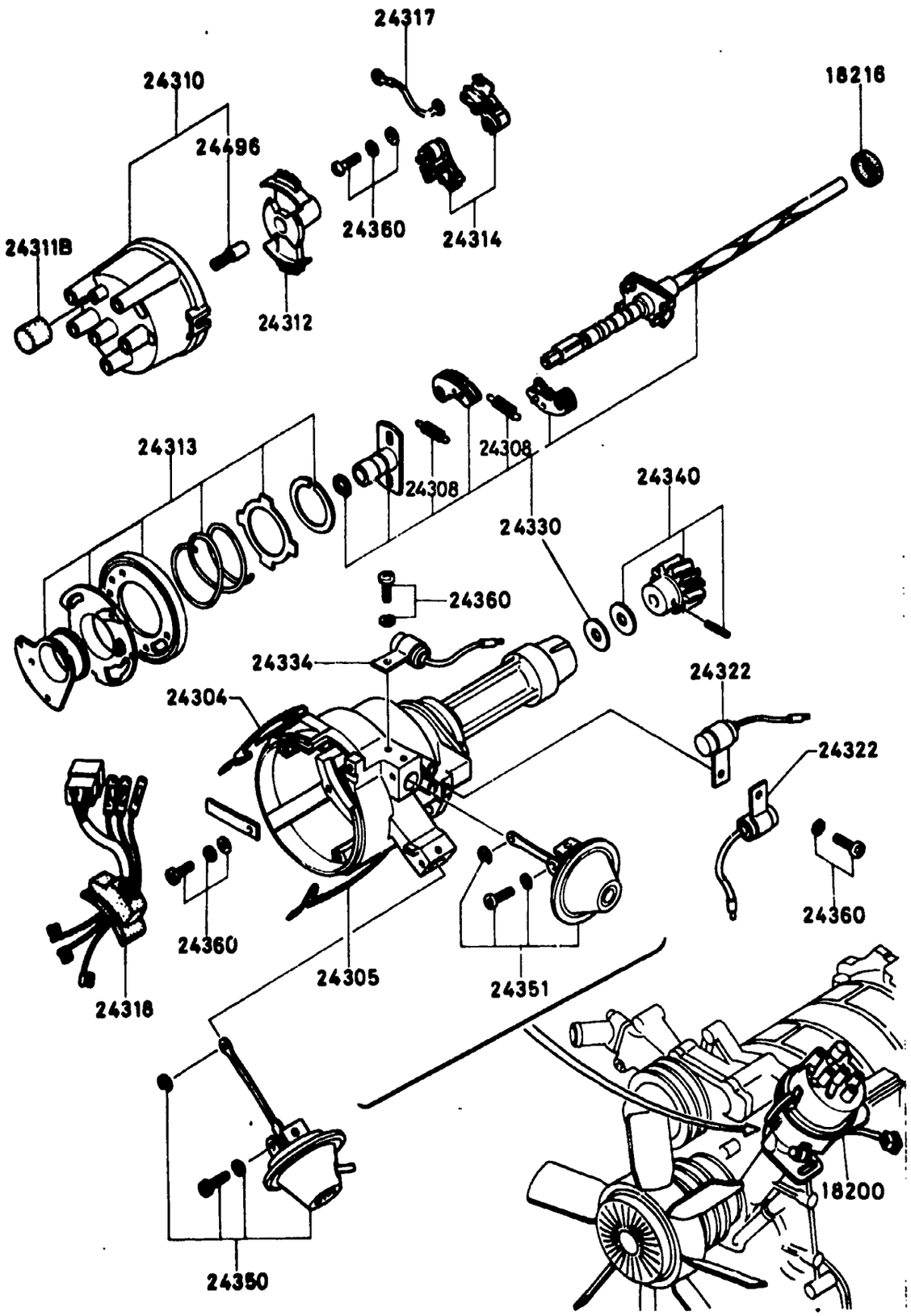

1820A-2* DISTRIBUTOR (1979 MODEL)

D-CODE (Key No.)	PART NAME	PART No.	Qty.	MODEL/DESCRIPTION	VIN (Chassis No.)
24330	GOVERNOR SET REGULATEUR, JEU JUEGO GOVERNADOR	8826-24-330	1		
24334	CONDENSER CONDENSATEUR CONDENSADOR	1757-24-334	1		
24340	COUPLING SET PIGNON DISTRIB. JUEGO DE UNIDNES	3648-24-340	1		
24350	VACUUM SET ENSEMBLE DE DEPRESSION JUEGO VACIO	8826-24-350	1	M/T	
		8827-24-350	1	A/T	
24351	VACUUM SET ENSEMBLE DE DEPRESSION JUEGO VACIO	8826-24-351	1		
24360	SCREW SET JEU DE VIS TORNILLOS, JGO.	8761-24-360	1		
24496	CONTACT CONTACT CONTACTO	1757-24-302	1		

1820AA DISTRIBUTOR (1980 MODEL)

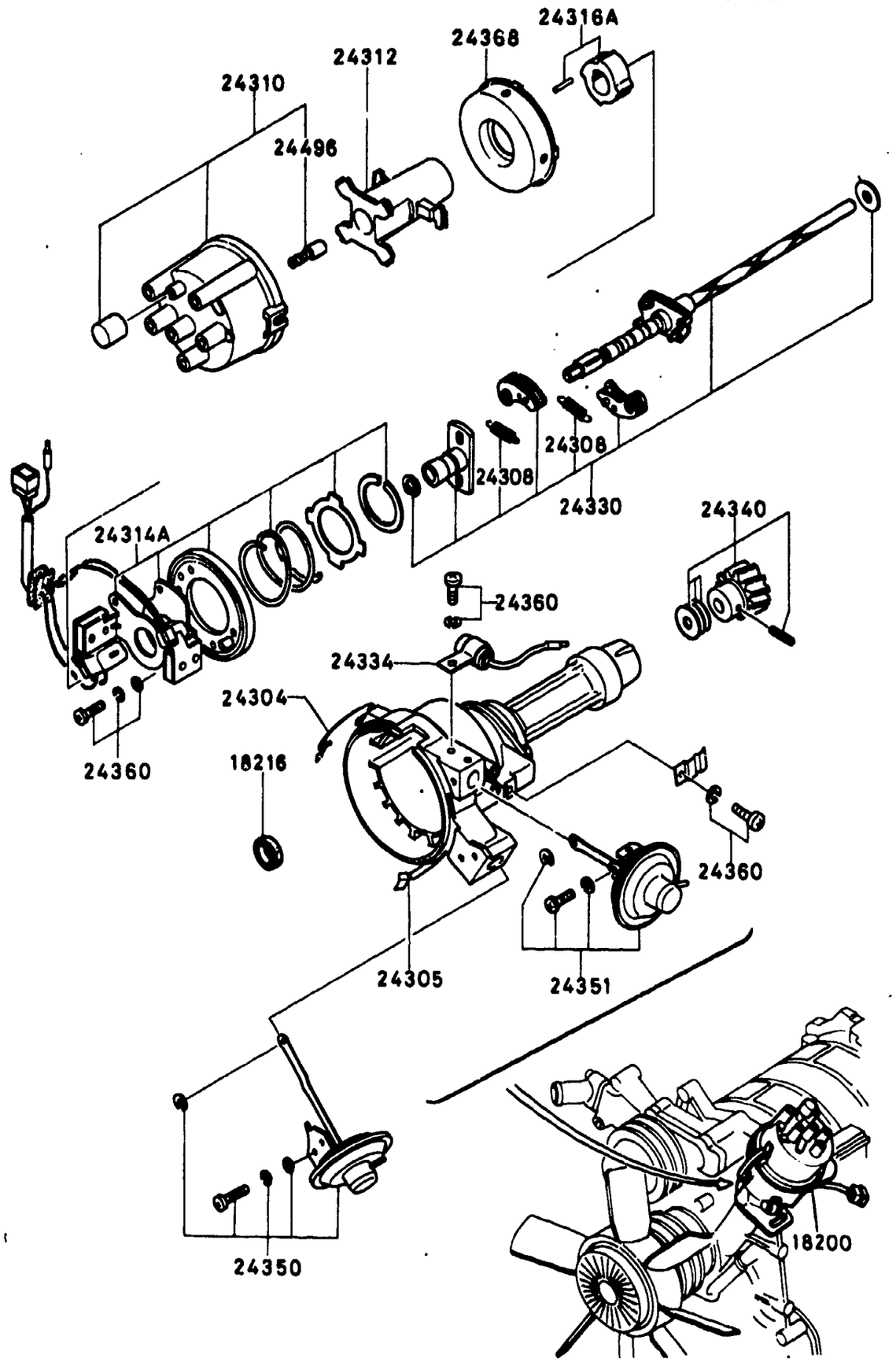

1820AA-1 DISTRIBUTOR (1980 MODEL)

D-CODE (Key No.)	PART NAME	PART No.	Qty.	MODEL/DESCRIPTION	VIN (Chassis No.)
18200	DISTRIBUTOR DISTRIBUTEUR DISTRIBUIDOR	8341-18-200	1	M/T	
		8342-18-200	1	A/T	
18216	SEAL,OIL ARRET D'HUILE RETEN,ACEITE	0107-18-216A	1		
24304	CLAMP CRAMPON PRENSA	8245-24-304	1		
24305	CLAMP CRAMPON PRENSA	8245-24-305	1		
24308	SPRING SET JEU DE RESSORTS RESORTE,JUEGO	8245-24-308	1		
24310	CAP BOUCHON TAPA	8245-24-310B	1		
24312	ROTOR ROTOR ROTOR	8245-24-303A	1		
24314A	PICK UP SET	8341-24-314	1		
24316A	ROTOR SET,SIGNAL	8245-24-316	1		
24330	GOVERNOR SET REGULATEUR, JEU JUEGO GOVERNADOR	8341-24-330	1		
24334	CONDENSER CONDENSATEUR CONDENSADOR	1757-24-334	1		
24340	COUPLING SET PIGNON DISTRIB. JUEGO DE UNIDNES	3648-24-340	1		
24350	VACUUM SET ENSEMBLE DE DEPRESSION JUEGO VACIO	8245-24-350	1	M/T	
		8827-24-350	1	A/T	

1820AA DISTRIBUTOR (1980 MODEL)

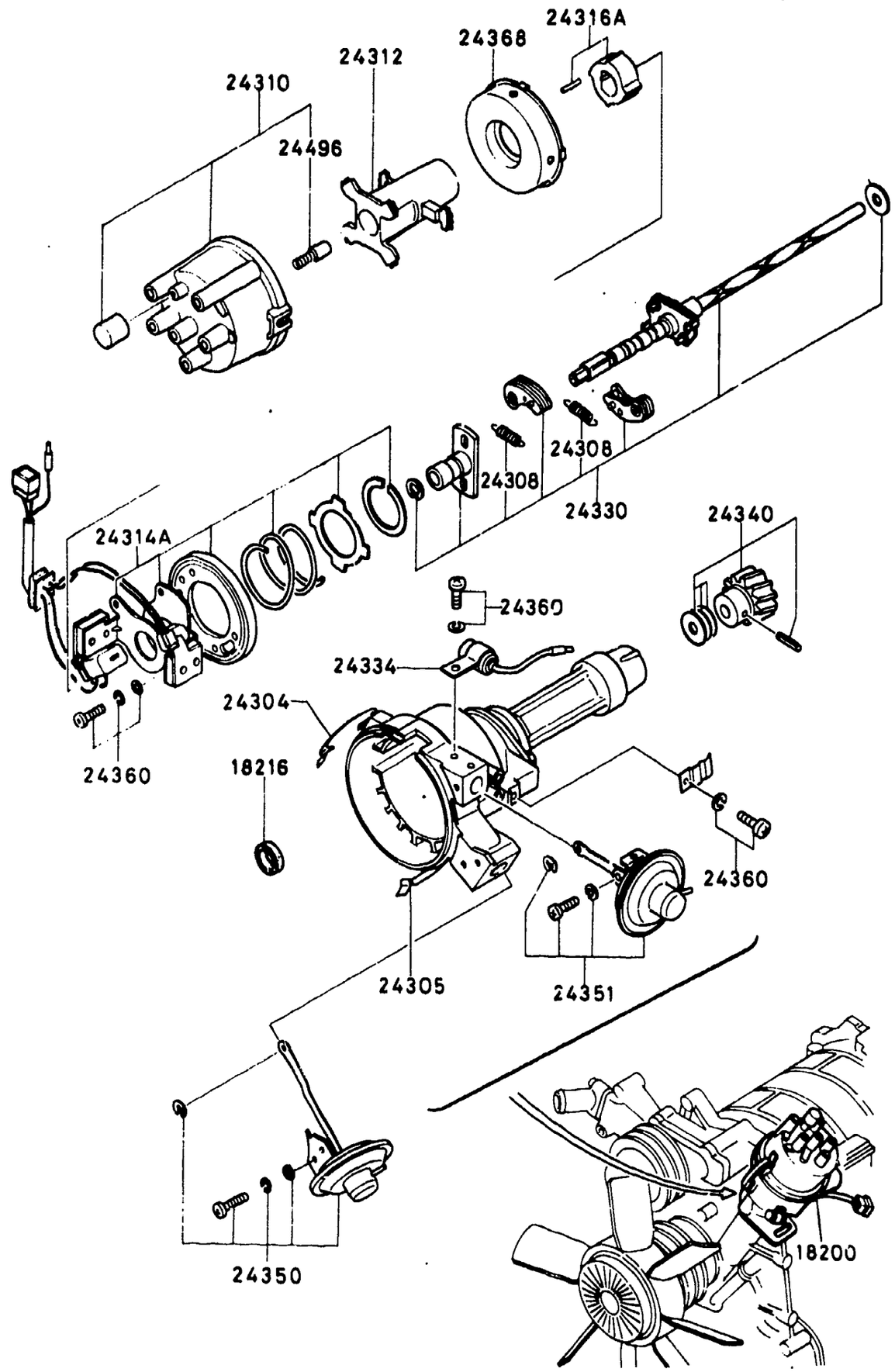

1820AA-2* DISTRIBUTOR (1980 MODEL)

D-CODE (Key No.)	PART NAME	PART No.	Qty.	MODEL DESCRIPTION	VIN (Chassis No.)
24351	VACUUM SET ENSEMBLE DE DEPRESSION JUEGO VACIO	8245-24-351	1		
24360	SCREW SET JEU DE VIS TORNILLOS,JGO.	8245-24-360	1		
24368	COVER CACHE COBERTOR	8245-24-368A	1		
24496	CONTACT CONTACT CONTACTO	1757-24-302	1		

1830A ALTERNATOR (ALL 1979 MODELS & 1980 CANADA A/T MODEL)

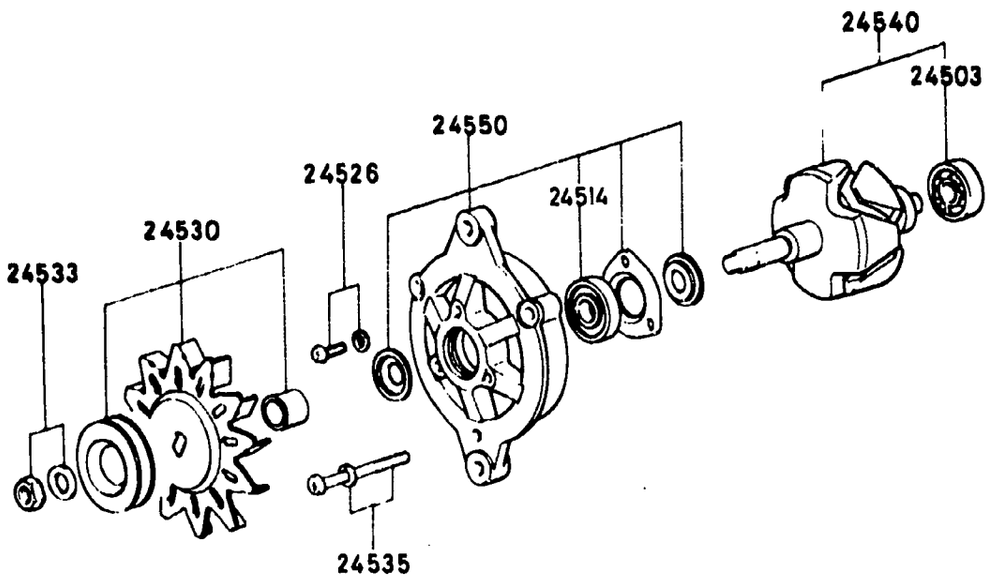

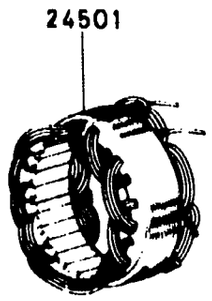

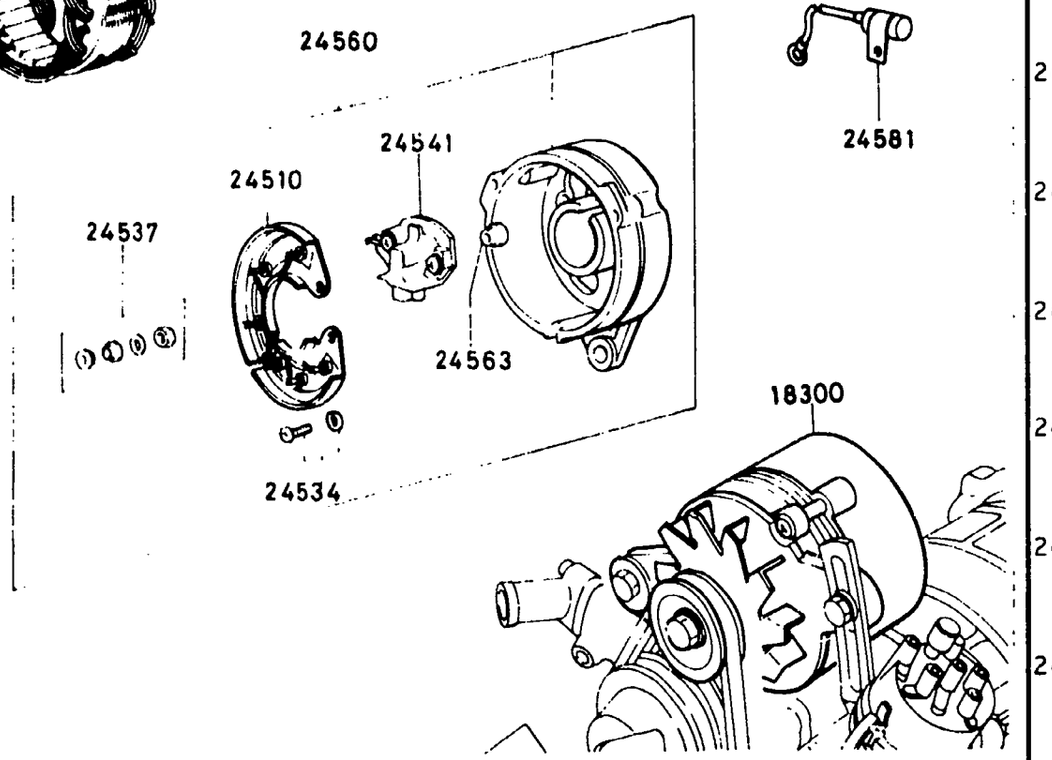

1830A-1 ALTERNATOR (ALL 1979 MODELS & 1980 CANADA A/T MODEL)

D-CODE (Key No.)	PART NAME	PART No.	Qty.	MODEL DESCRIPTION	VIN (Chassis No.)
18300	ALTERNATOR ALTERNATEUR ALTERNADOR	8871-18-300	1		
24501	STATOR INDUIT FIXE ESTATOR	8086-24-501A	1		
24503	BEARING, BALL ROULEMENT A BILLES RODAMIENTO DE BOLAS	0820-24-503	1		
24510	RECTIFIER REDRESSEUR RECTIFICADOR	8086-24-510	1		
24514	BEARING, BALL ROULEMENT A BILLES RODAMIENTO DE BOLAS	0114-18-327	1		
24526	SCREW SET JEU DE VIS TORNILLO, JGO.	1757-24-526	1		
24530	PULLEY POULIE POLEA	8871-24-530	1		
24533	NUT SET JEU D'ECROUS TUERCAS, JGO.	0483-24-533	1		
24534	SCREW SET JEU DE VIS TORNILLO, JGO.	1757-24-534	1		
24535	SCREW SET JEU DE VIS TORNILLO, JGO.	8023-24-535	1		
24537	NUT SET JEU D'ECROUS TUERCAS, JGO.	8086-24-537	1		
24540	ROTOR ROTOR ROTOR	8086-24-540A	1		
24541	BRUSH & HOLDER PORTE-BALAIS ET BALAIS CARBON Y PORTA-CARBON	1011-24-541	1		
24550	BRACKET, FRONT ATTACHE, AV SOPORTE, DEL.	8086-24-550	1		
24560	BRACKET, REAR ATTACHE, AR	8086-24-560	1		

1830A ALTERNATOR (ALL 1979 MODELS & 1980 CANADA A/T MODEL)

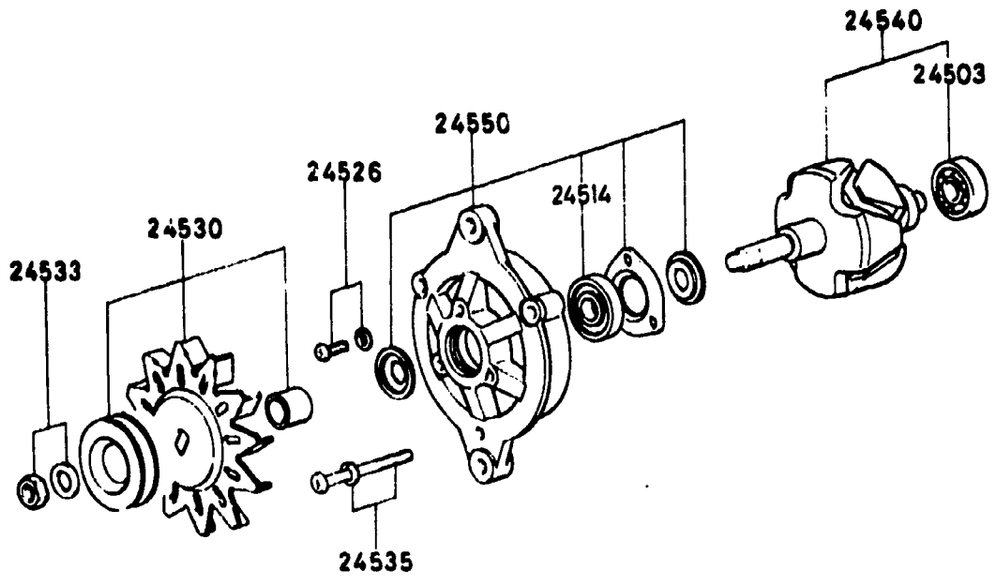

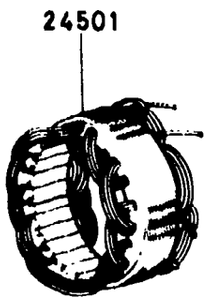

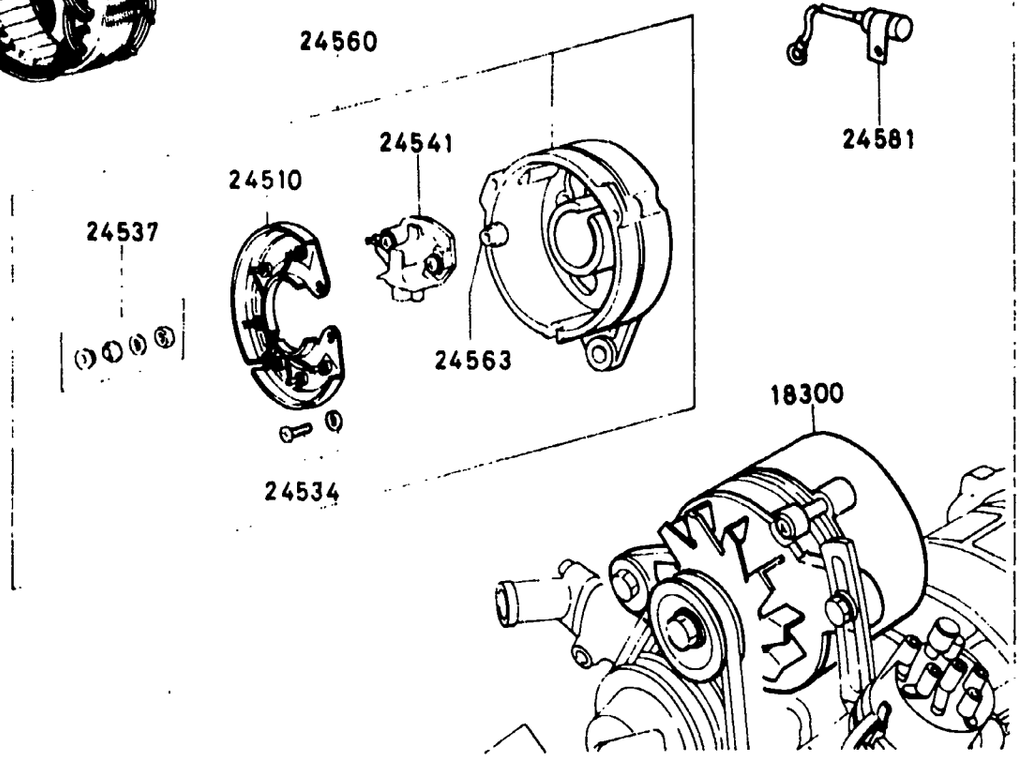

1830A-2* ALTERNATOR (ALL 1979 MODELS & 1980 CANADA A/T MODEL)

D-CODE (Key No.)	PART NAME	PART No.	Qty.	MODEL DESCRIPTION	VIN (Chassis No.)
24560 CONT'D	SOPORTE, TRAS.	8086-24-560			
24563	MOULD MOULURE MOLDURA	1011-24-563	1		
24581	CONDENSER CONDENSATEUR CONDENSADOR	8086-24-581	1		

1830AA ALTERNATOR (ALL 1980 MODELS EXCEPT CANADA A/T)

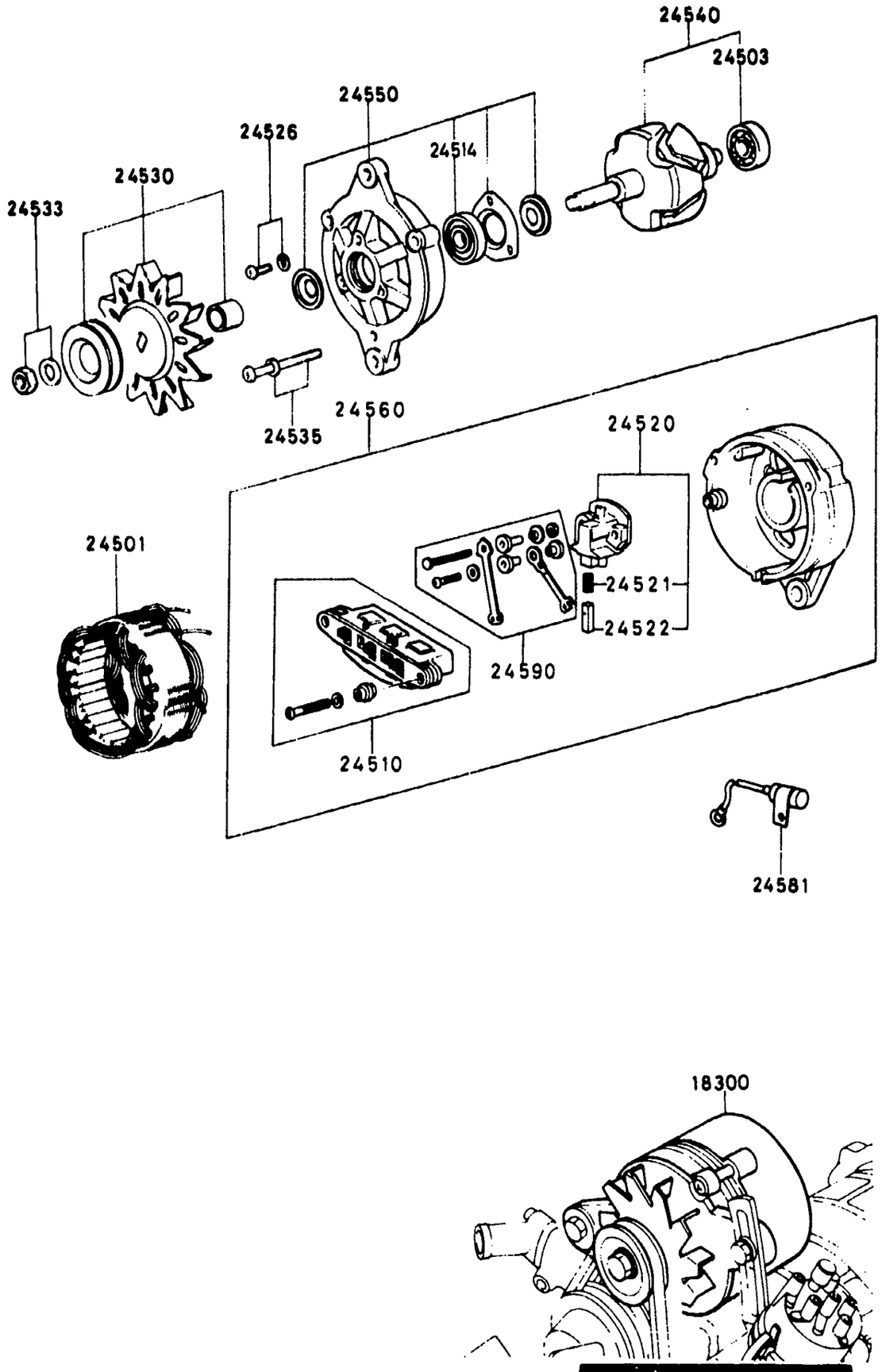

1830AA-1 ALTERNATOR (ALL 1980 MODELS EXCEPT CANADA A/T)

D-CODE (Key No.)	PART NAME	PART No.	Qty.	MODEL DESCRIPTION	VIN (Chassis No.)
18300	ALTERNATOR ALTERNATEUR ALTERNADOR	8341-18-300	1		
24501	STATOR INDUIT FIXE ESTATOR	8173-24-501A	1		
24503	BEARING,BALL ROULEMENT A BILLES RODAMIENTO DE BOLAS	0820-24-503	1		
24510	RECTIFIER REDRESSEUR RECTIFICADOR	8173-24-510	1		
24514	BEARING,BALL ROULEMENT A BILLES RODAMIENTO DE BOLAS	0114-18-327	1		
24520	REGULATOR	8173-24-520	1		
24521	SPRING,BRUSH RESSORT,BALAIS RESORTE,CARBON	8173-24-521	2		
24522	BRUSH	8173-24-522	2		
24526	SCREW SET JEU DE VIS TORNILLO,JGO.	1757-24-526	1		
24530	PULLEY POULIE POLEA	8871-24-530	1		
24533	NUT SET JEU D'ECROUS TUERCAS,JGO.	8023-24-533	1		
24535	SCREW SET JEU DE VIS TORNILLO,JGO.	8023-24-535	1		
24540	ROTOR ROTOR ROTOR	8036-24-540A	1		
24550	BRACKET,FRONT ATTACHE, AV SOPORTE,DEL.	8173-24-550	1		
24560	BRACKET,REAR ATTACHE, AR	8173-24-560	1		

SECTION NUMBER INDEX (ENGINE)

STARTING LOCATION	SECTION No.	SECTION NAME
1–C2	1000A	SHORT ENGINE & GASKET SET
1–D2	1030A	ROTOR HOUSING
1–G2	1040A	HOUSING (FRONT & REAR)
1–C3	1100A	ECCENTRIC SHAFT & FLYWHEEL
1–F3	1110A	ROTOR
1–C4	1300A	IN. MANIFOLD
1–D4	1310A	THERMAL REACTOR
1–E4	1320A	FUEL SYSTEM
1–G4	1330A	AIR CLEANER
1–H4	1350A	STARTING ASSIST SYSTEM
1–I4	1360A	CARBURETOR
1–F6	1371A	EMISSION CONTROLS (AIR PUMP & CONTROL VALVE)
1–H6	1380A	EMISSION CONTROLS (EX. SIDE)
1–C8	1400A	OIL PUMP & FILTER
1–F8	1500A	COOLING SYSTEM
1–K8	1600A	CLUTCH (MANUAL)
1–C9	1700A	T/MISSION CASE (MANUAL)
1–G9	1710A	T/MISSION GEAR (MANUAL)
1–E10	1720A	CHANGE CONTROLS (MANUAL)
1–C11	1800A	ELECTRICAL SYSTEM (ENGINE)
1–H11	1820A	DISTRIBUTOR
1–L11	1830A	ALTERNATOR
1–D12	1840A	STARTER
1–H12	1850A	BATTERY & CABLES
1–C13	1910A	CONVERTER, OIL PUMP & PIPING (AUTOMATIC T/MISSION)
1–F13	1920A	CASE & MAIN CONTROLS (AUTOMATIC T/MISSION)
1–K13	1930A	CLUTCH & PLANETARY GEAR (AUTOMATIC T/MISSION)
1–D14	1940A	LOW, REVERSE & GOVERNOR (AUTOMATIC T/MISSION)
1–G14	1950A	MANUAL LINKAGE (AUTOMATIC T/MISSION)

THE FRAMES IN THIS COLUMN INDICATE :

1–N11	1830AA	ALTERNATOR (ALL 1980 MODELS EXCEPT CANADA A/T)
1–D12	1840A	STARTER (M/T)
1–F12	1840AA	STARTER (A/T)
1–H12	1850A	BATTERY & CABLES

© 1983 Toyo Kogyo Co., Ltd
MAY 1983

1830AA ALTERNATOR (ALL 1980 MODELS EXCEPT CANADA A/T)

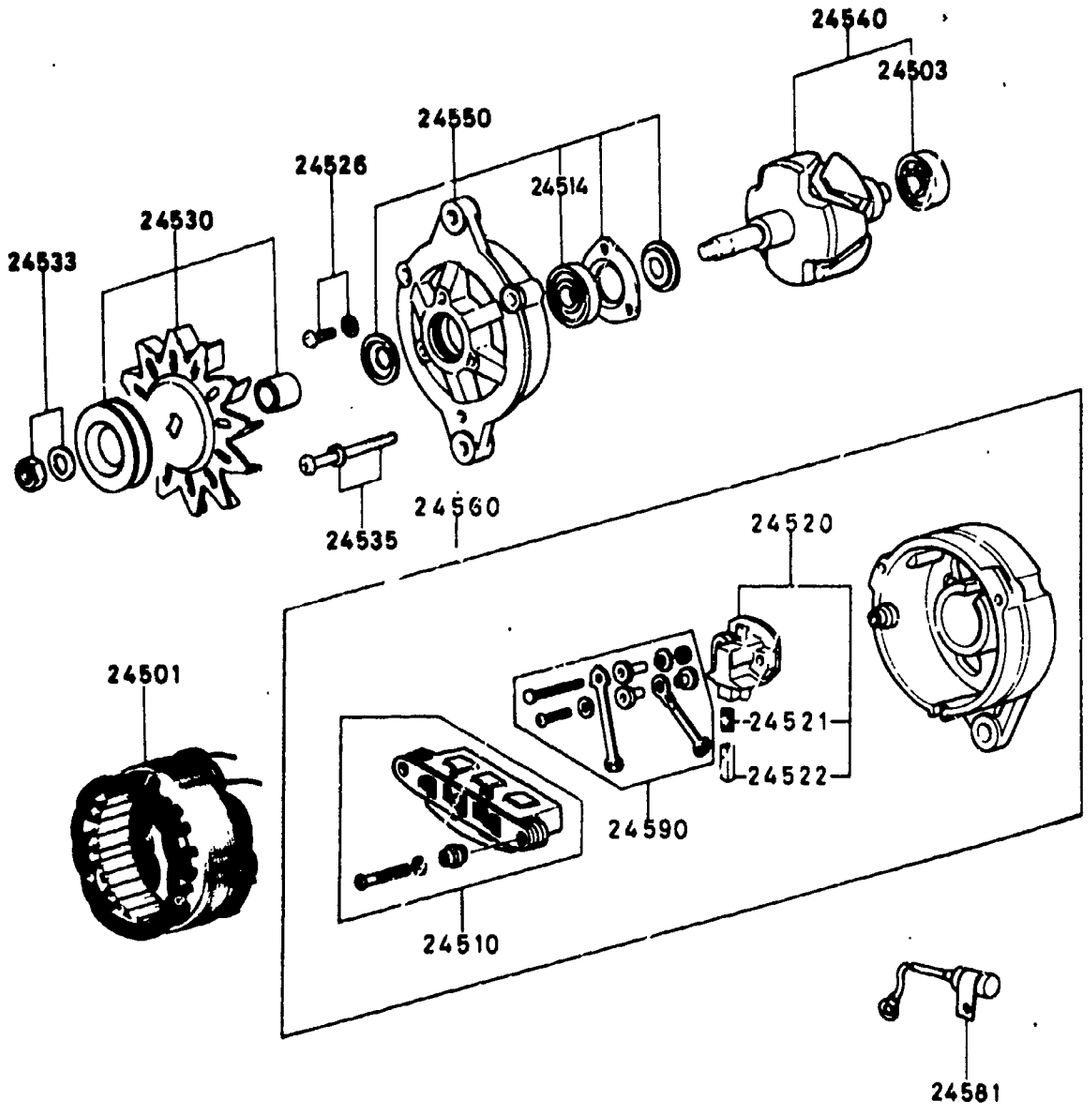

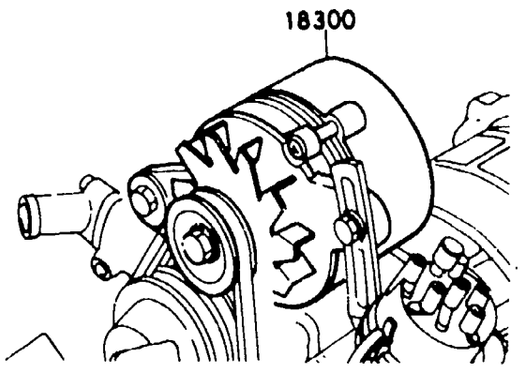

1830AA-2* ALTERNATOR (ALL 1980 MODELS EXCEPT CANADA A/T)

D-CODE (Key No.)	PART NAME	PART No.	Qty.	MODEL/DESCRIPTION	VIN (Chassis No.)
24560 CONT'D	SOPORTE, TRAS.	8173-24-560			
24581	CONDENSER CONDENSATEUR CONDENSADOR	8086-24-581	1		
24590	TERMINAL SET	8173-24-590	1		

1840A STARTER (M/T)

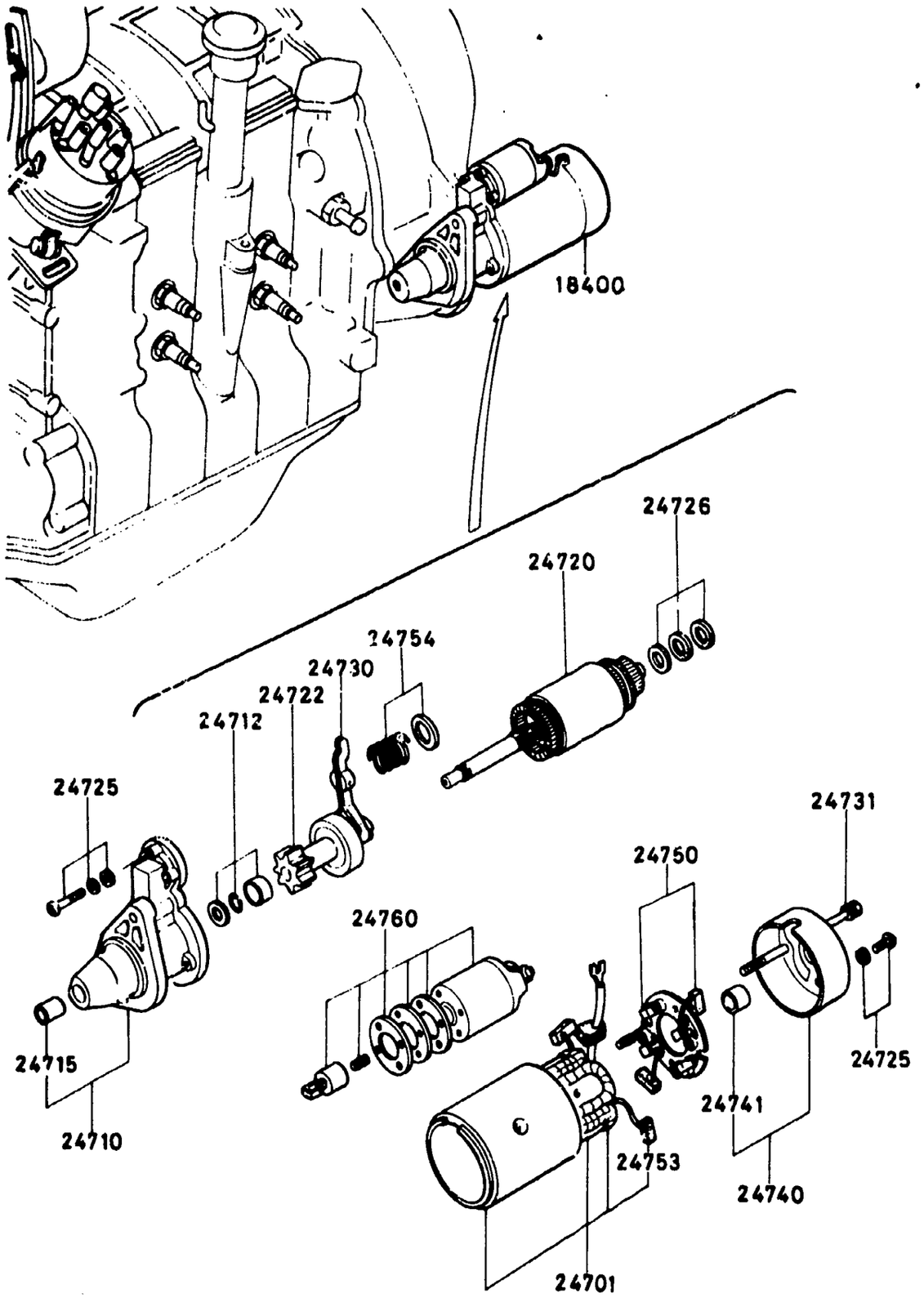

1840A-1 STARTER (M/T)

D-CODE (Key No.)	PART NAME	PART No.	Qty.	MODEL DESCRIPTION	VIN (Chassis No.)
18400	STARTER DEMARREUR ARRANQUE	1757-18-400D	1		
24701	YOKE MANCHON CULATA	1757-24-730A	1		
24710	BRACKET,FRONT ATTACHE, AV SOPORTE,DEL.	1757-24-710C	1		
24712	STOPPER SET ARRETOIR, JEU JUEGO DE TAPONES	0426-24-712	1		
24715	SLEEVE,BEARING BAGUE DE ROULEMENT MANGUITO,COJINETE	0426-24-715A	1		
24720	ARMATURE INDUIT INDUCIDO	3648-24-705	1		
24722	CLUTCH,OVER RUNNING LANCEUR DE DEMARREUR EMBRAGUE LIBRE	3648-24-709	1		
24725	SCREW SET JEU DE VIS TORNILLO,JGO.	8872-24-725	1		
24726	WASHER SET JEU DE RONDELFES JUEGO ARANDELA	0426-24-726	1		
24730	LEVER LEVIER PALANCA	0222-24-730	1		
24731	BOLT SET JEU DE BOULONS PERNOS,JUEGO	0426-24-731	1		
24740	BRACKET,REAR ATTACHE, AR SOPORTE,TRAS.	0222-24-740	1		
24741	SLEEVE,BEARING BAGUE DE ROULEMENT MANGUITO,COJINETE	0222-24-741	1		
24750	HOLDER,BRUSH PORTE CHARBON PORTA CARBON	1758-24-750	1		
24753	BRUSH,YOKE BALAIS, CULASSE DEM.	0222-24-753	2		

1840A STARTER (M/T)

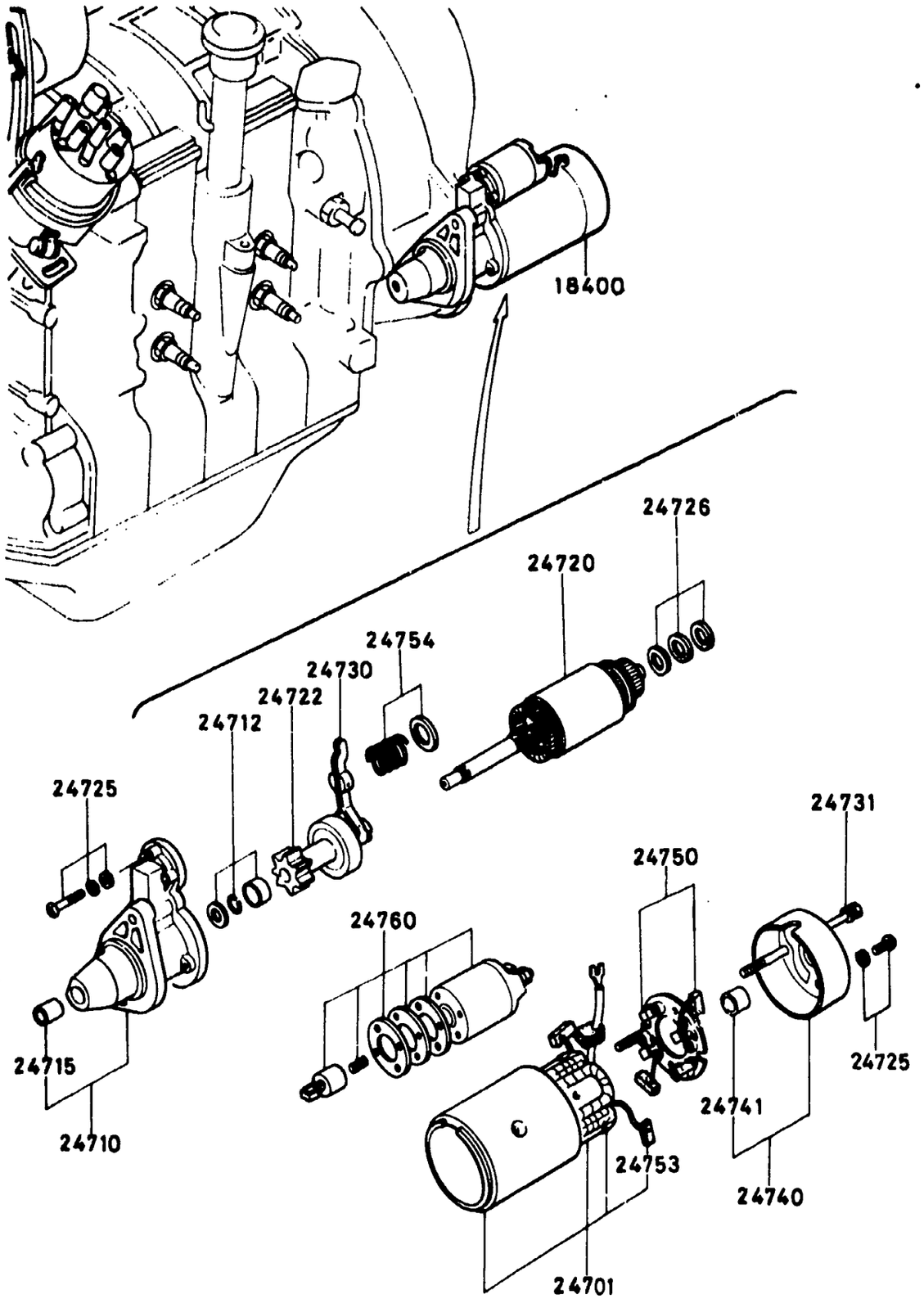

1840A-2* STARTER (M/T)

D-CODE (Key No.)	PART NAME	PART No.	Qty.	MODEL DESCRIPTION	VIN (Chassis No.)
24753 CONT'D	CARBON, HORQUILLA	0222-24-753			
24754	SPRING SET JEU DE RESSORTS JUEGO DE RESORTES	0426-24-754	1		
24760	SWITCH COMMUTATEUR INTERRUPTOR	1757-24-760	1		

1840AA STARTER (A/T)

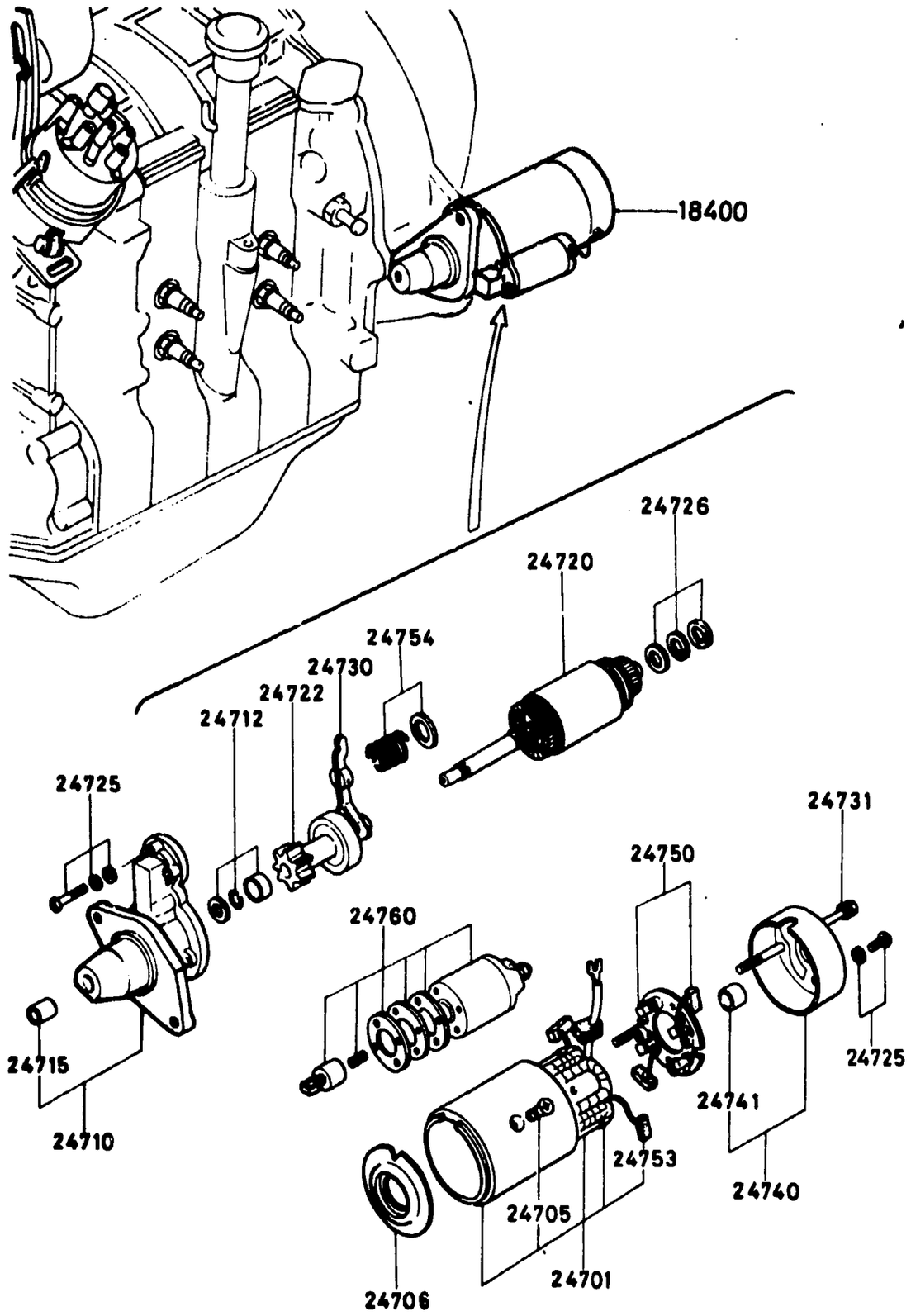

1840AA-1 STARTER (A/T)

D-CODE (Key No.)	PART NAME	PART No.	Qty.	MODEL DESCRIPTION	VIN (Chassis No.)
18400	STARTER DEMARREUR ARRANQUE	8872-18-400A	1		
24701	YOKE MANCHON CULATA	8872-24-730	1		
24705	SCREW VIS TORNILLO	0866-24-704	4		
24706	BRACKET,CENTER ATTACHE DU MILIEU SOPORTE,CENTRAL	1758-24-706	1		
24710	BRACKET,FRONT ATTACHE, AV SOPORTE,DEL.	8872-24-710	1		
24712	STOPPER SET ARRETOIR, JEU JUEGO DE TAPONES	0426-24-712	1		
24715	SLEEVE,BEARING BAGUE DE ROULEMENT MANGUITO,COJINETE	0426-24-715A	1		
24720	ARMATURE INDUIT INDUCIDO	1758-24-705	1		
24722	CLUTCH,OVER RUNNING LANCEUR DE DEMARREUR EMBRAGUE LIBRE	1757-24-709	1		
24725	SCREW SET JEU DE VIS TORNILLO,JGO.	8872-24-725	1		
24726	WASHER SET JEU DE RONDELFES JUEGO ARANDELA	1758-24-726	1		
24730	LEVER LEVIER PALANCA	0866-24-716	1		
24731	BOLT SET JEU DE BOULONS PERNOS,JUEGO	8872-24-731	1		
24740	BRACKET,REAR ATTACHE, AR SOPORTE,TRAS.	0845-24-720	1		
24741	SLEEVE,BEARING BAGUE DE ROULEMENT	0222-24-741	1		

1840AA STARTER (A/T)

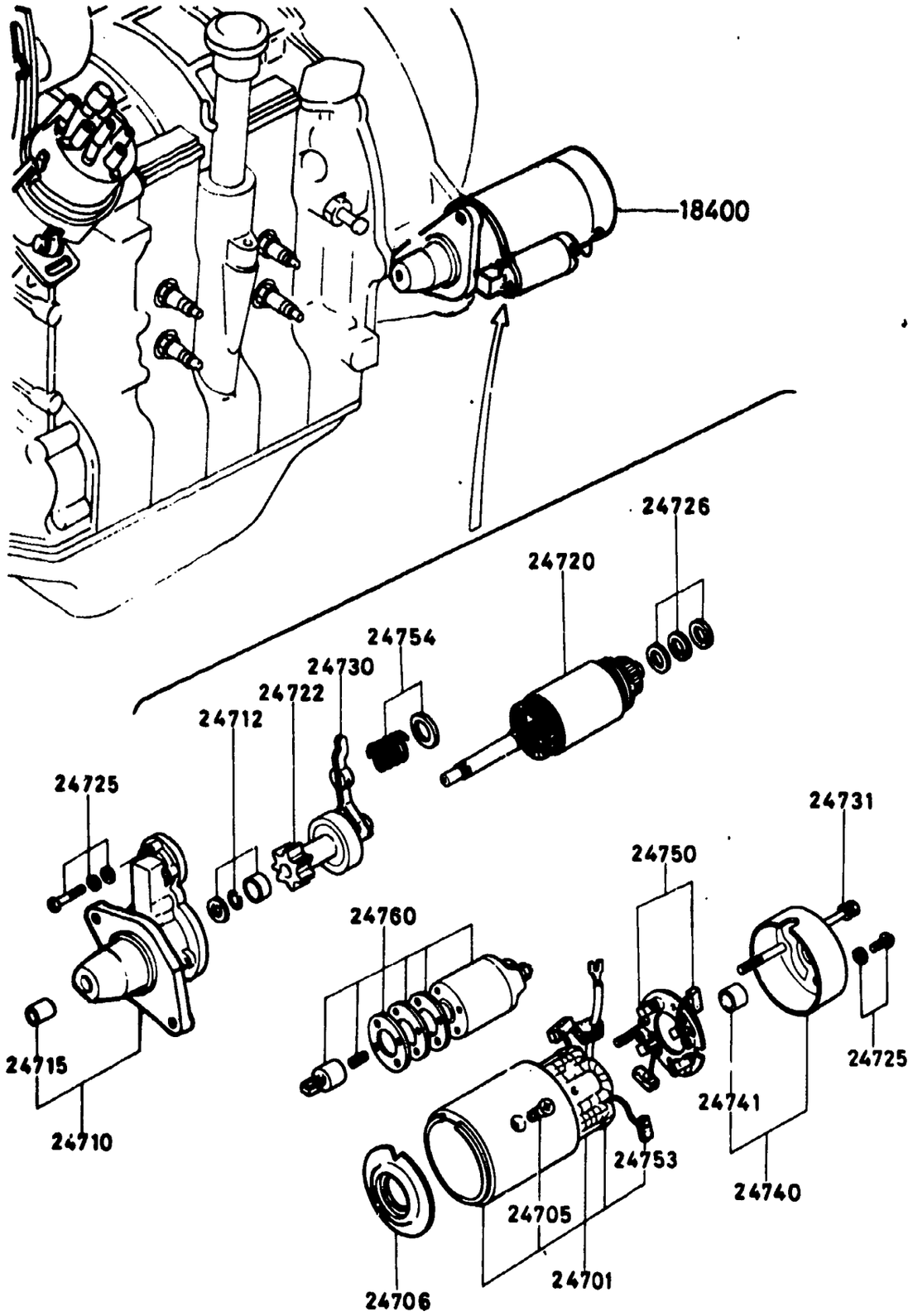

1840AA-2* STARTER (A/T)

D-CODE (Key No.)	PART NAME	PART No.	Qty.	MODEL DESCRIPTION	VIN (Chassis No.)
24741 CONT'D	MANGUITO,COJINETE	0222-24-741			
24750	HOLDER,BRUSH PORTE CHARBON PORTA CARBON	1758-24-750	1		
24753	BRUSH,YOKE BALAIS, CULASSE DEM. CARBON,HORQUILLA	0426-24-753	2		
24754	SPRING SET JEU DE RESSORTS JUEGO DE RESORTES	0426-24-754	1		
24760	SWITCH COMMUTATEUR INTERRUPTOR	8872-24-736	1		

1850A BATTERY & CABLES

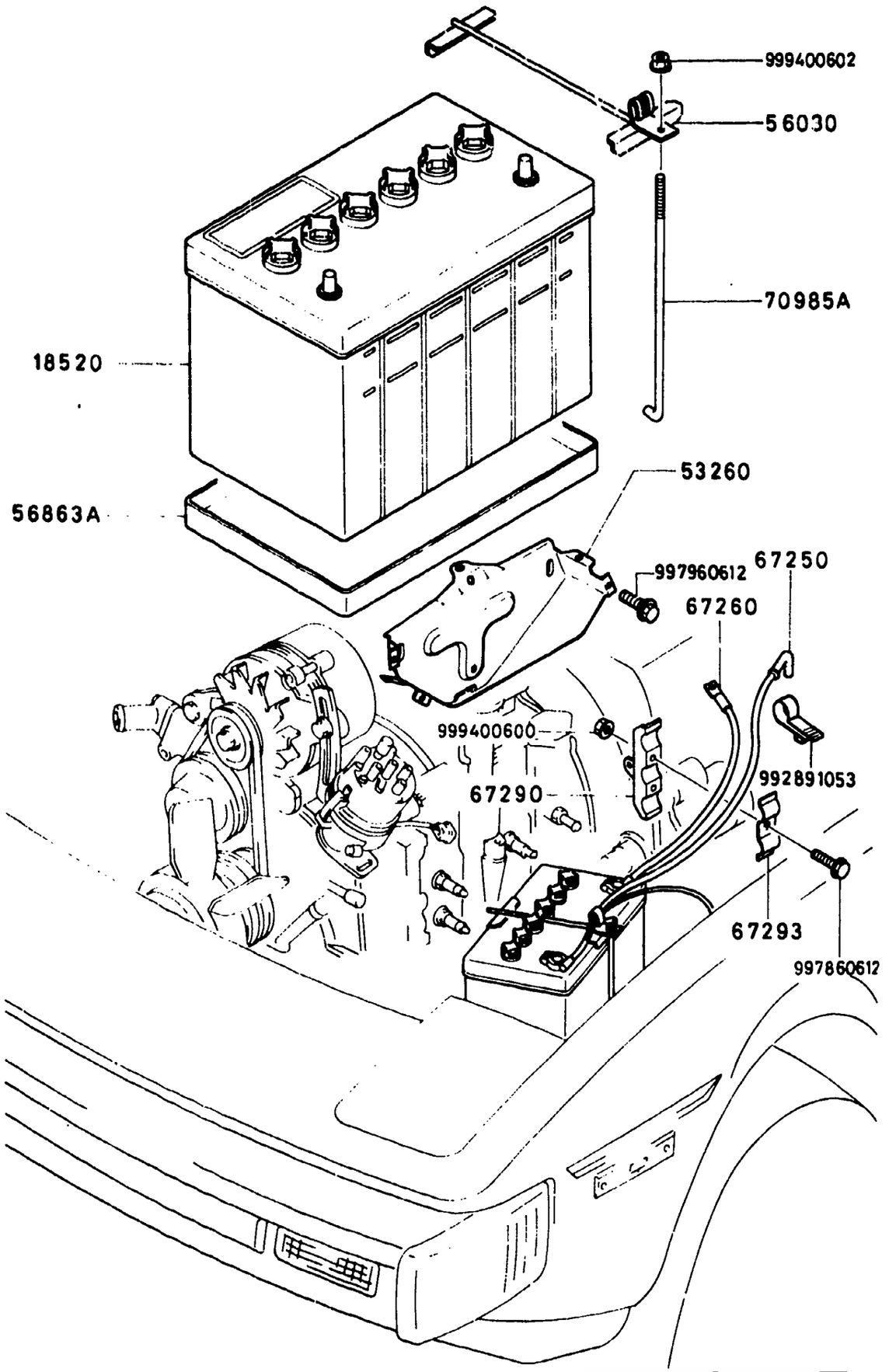

1850A-1 BATTERY & CABLES

D-CODE (Key No.)	PART NAME	PART No.	Qty.	MODEL / DESCRIPTION	VIN (Chassis No.)
18520	BATTERY BATTERIE BAT RIA	0504-18-520B	1	(G60-5 GS)	
		8715-18-520	1	(NS 70S)(GS MAKE)	
53260	CARRIER,BATTERY BAC SUPPORT, BATTERIE PORTADOR DE BATERIA	8871-54-260	1		SA22C .. 500001 -531148
	<G >	8871-54-260A	1		SA22C .. 531149 -576263
	<A >	8871-54-260B	1		SA22C .. 576264-
56030	CLAMP,BATTERY CORNIERE DE BATTERIE PRENSA PARA BATERIA	8871-56-030	1		
56863A	TRAY,BATTERY BAC, SUPPORT BATTERIE BANDEJA,BATERIA	2113-54-295	1		
67250	CABLE,POSIT.-BATTERY CABLE, POSITIF CABLE POSITIVO	8871-67-250	1	M/T	SA22C .. 500001 -554324
		8871-67-250A	1	M/T	SA22C .. 554325-
		8872-67-250	1	A/T	SA22C .. 500001 -554324
		8872-67-250A	1	A/T	SA22C .. 554325-
67260	CABLE,EARTH-BATTERY CABLE, MASSE CABLE NEGATIVO PARA BATER	8871-67-260	1		SA22C .. 500001 -554324
		8871-67-260A	1		SA22C .. 554325-
67290	CLIP,CABLE ATTACHE, CABLE SEGURO,CAJA	1011-67-291A	1		
67293	CLIP,CABLE ATTACHE, CABLE	1011-67-293	2		

1850A BATTERY & CABLES

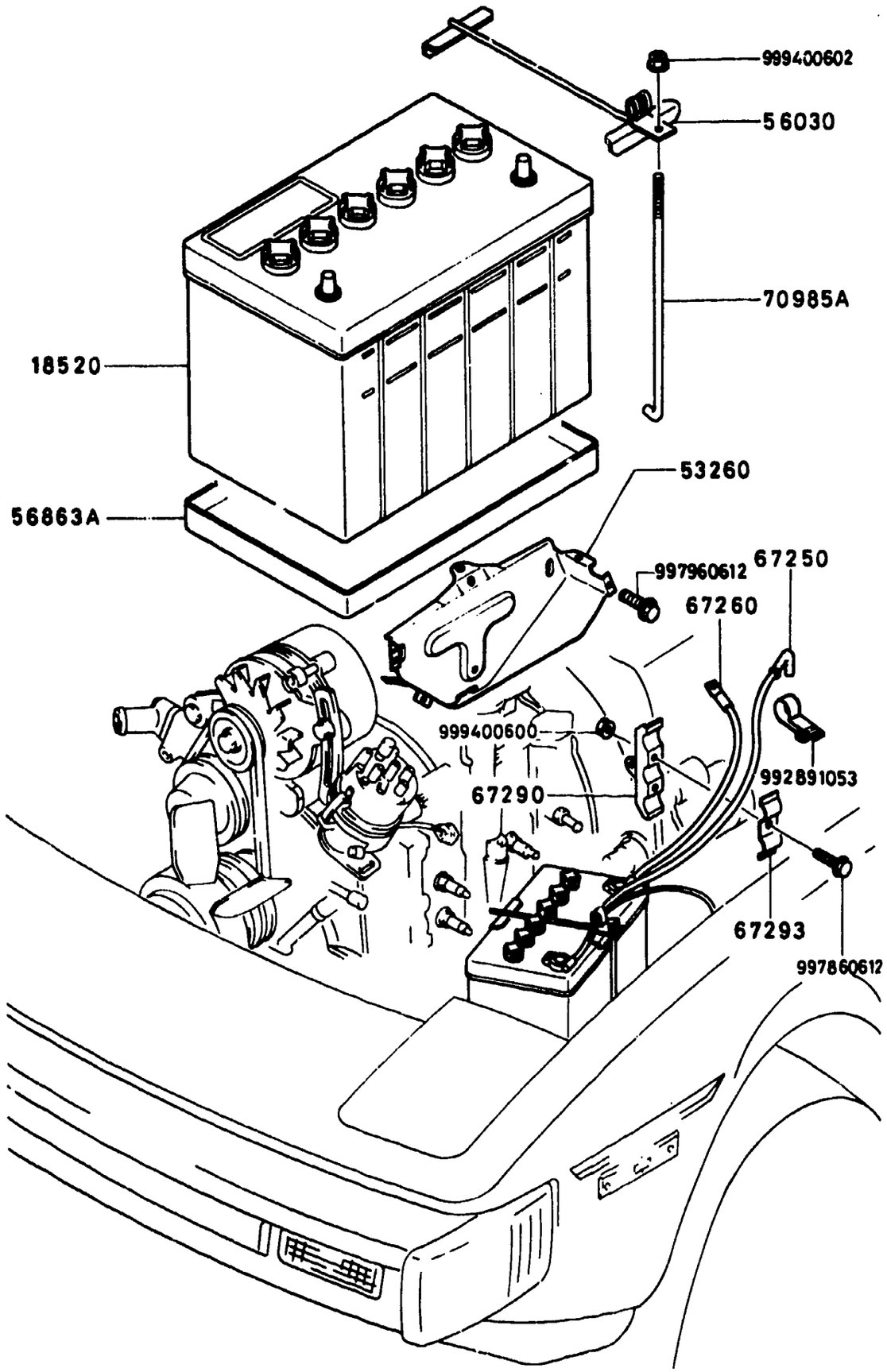

1850A-2* BATTERY & CABLES

D-CODE (Key No.)	PART NAME	PART No.	Qty.	MODEL/DESCRIPTION	VIN (Chassis No.)
67293 CONT'D	SEGURO,CAJA	1011-67-293			
70985A	BOLT,CLAMP BOULON,CRAMPON PERNO,ABRAZADERA	0613-65-857	1		SA22C .. 500001 -500902
		0613-65-857A	1		SA22C .. 500903-

SECTION NUMBER INDEX (ENGINE)

STARTING LOCATION	SECTION No.	SECTION NAME
1–C2	1000A	SHORT ENGINE & GASKET SET
1–D2	1030A	ROTOR HOUSING
1–G2	1040A	HOUSING (FRONT & REAR)
1–C3	1100A	ECCENTRIC SHAFT & FLYWHEEL
1–F3	1110A	ROTOR
1–C4	1300A	IN. MANIFOLD
1–D4	1310A	THERMAL REACTOR
1–E4	1320A	FUEL SYSTEM
1–G4	1330A	AIR CLEANER
1–H4	1350A	STARTING ASSIST SYSTEM
1–I4	1360A	CARBURETOR
1–F6	1371A	EMISSION CONTROLS (AIR PUMP & CONTROL VALVE)
1–H6	1380A	EMISSION CONTROLS (EX. SIDE)
1–C8	1400A	OIL PUMP & FILTER
1–F8	1500A	COOLING SYSTEM
1–K8	1600A	CLUTCH (MANUAL)
1–C9	1700A	T/MISSION CASE (MANUAL)
1–G9	1710A	T/MISSION GEAR (MANUAL)
1–E10	1720A	CHANGE CONTROLS (MANUAL)
1–C11	1800A	ELECTRICAL SYSTEM (ENGINE)
1–H11	1820A	DISTRIBUTOR
1–L11	1830A	ALTERNATOR
1–D12	1840A	STARTER
1–H12	1850A	BATTERY & CABLES
1–C13	1910A	CONVERTER, OIL PUMP & PIPING (AUTOMATIC T/MISSION)
1–F13	1920A	CASE & MAIN CONTROLS (AUTOMATIC T/MISSION)
1–K13	1930A	CLUTCH & PLANETARY GEAR (AUTOMATIC T/MISSION)
1–D14	1940A	LOW, REVERSE & GOVERNOR (AUTOMATIC T/MISSION)
1–G14	1950A	MANUAL LINKAGE (AUTOMATIC T/MISSION)

THE FRAMES IN THIS COLUMN INDICATE :

1–C13	1910A	CONVERTER, OIL PUMP & PIPING (AUTOMATIC T/MISSION)
1–F13	1920A	CASE & MAIN CONTROLS (AUTOMATIC T/MISSION)
1–K13	1930A	CLUTCH & PLANETARY GEAR (AUTOMATIC T/MISSION)

© 1983 Toyo Kogyo Co., Ltd.
MAY 1983

1910A CONVERTER, OIL PUMP & PIPING (AUTOMATIC T/MISSION)

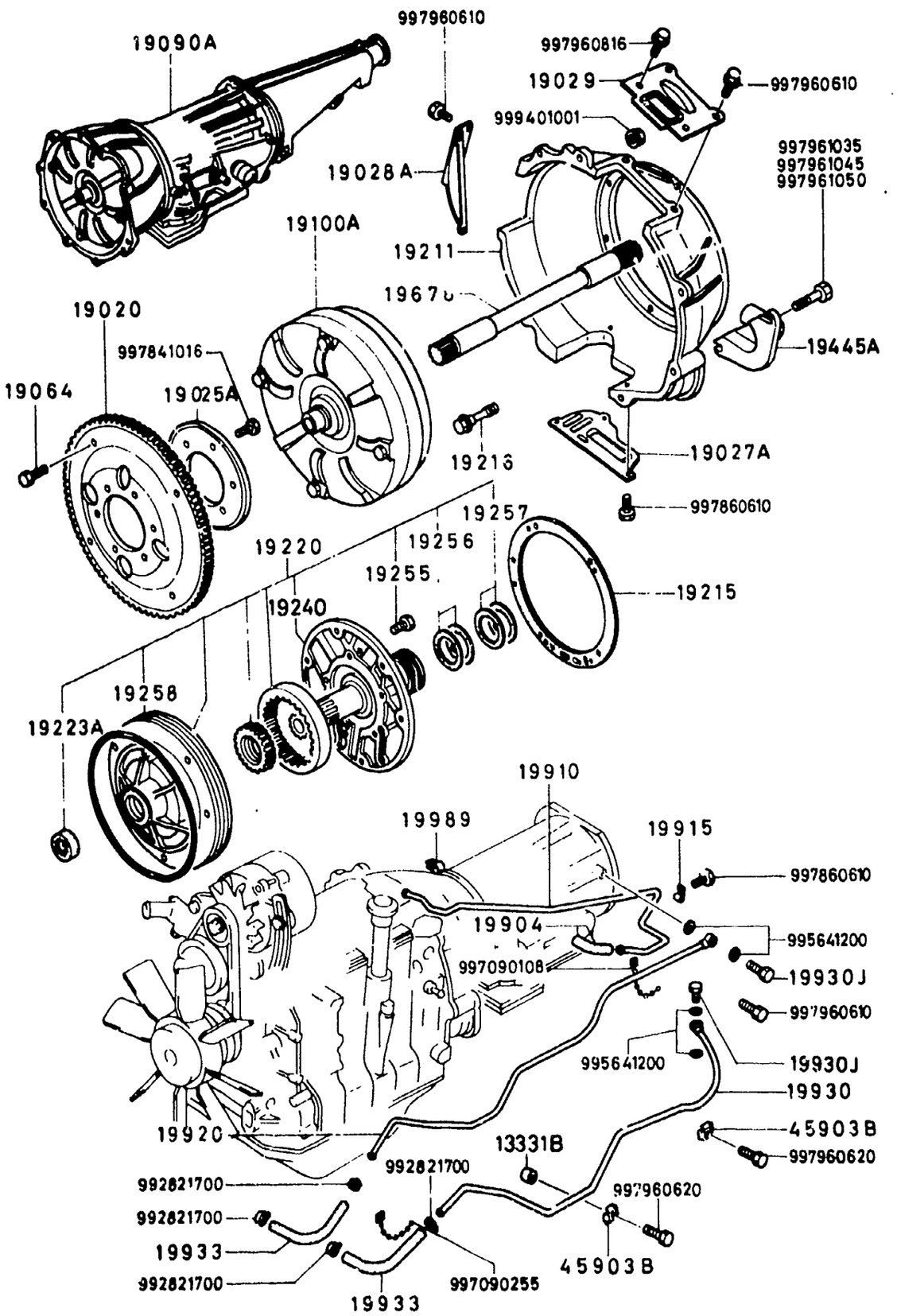

1910A-1 CONVERTER,OIL PUMP & PIPING (AUTOMATIC T/MISSION)

D-CODE (Key No.)	PART NAME	PART No.	Qty.	MODEL/DESCRIPTION	VIN (Chassis No.)
13331B	SPACER,OIL PIPE EPAISSEUR TUYAU HUILE	2850-13-331	1		
19020	PLATE,DRIVE DISQUE, BOITE AUTOM. PLATO EMPUJE	1758-19-020	1		
19025A	ADAPTER ADAPTEUR ADAPTADOR	0842-19-025	1		
19027A	COVER,UNDER COUVERCLE COBERTOR DE ABAJO	1908-19-027	1		
19028A	COVER,SIDE COUVERCLE, COTE COBERTOR LATERAL	0454-19-028A	1		
19029	COVER,TOP COUVERCLE SUP. COBERTOR SUPEIOR	1758-19-028	1		
19064	BOLT BOULON PERNO	3649-19-064	4		
19090A	T/MISSION CPT. TRANSMISSION COMPLETE	8872-19-090	1		
19100A	CONVERTER,TORQUE COUPLEUR CONVERTIDOR	1758-19-100	1		
19211	HOUSING,CONVERTER CARTER DE CONVERTISSEUR CASCO CONVERTIDOR	1758-19-211C	1		
19215	GASKET,OIL PUMP JOINT, POMPE A HUILE EMPAQUE, BOMBA ACEITE	1758-19-215	1		
19216	BOLT BOULON PERNO	0338-19-216	6		
19220	PUMP,OIL POMPE A HUILE BOMBA ACEITE	1758-19-220	1		
19223A	SEAL,OIL ARRET D'HUILE RETEN,ACEITE	0338-19-223	1		SA22C .. 500001 -566640
		0338-19-223A	1		SA22C .. 566641-

1910A CONVERTER, OIL PUMP & PIPING (AUTOMATIC T/MISSION)

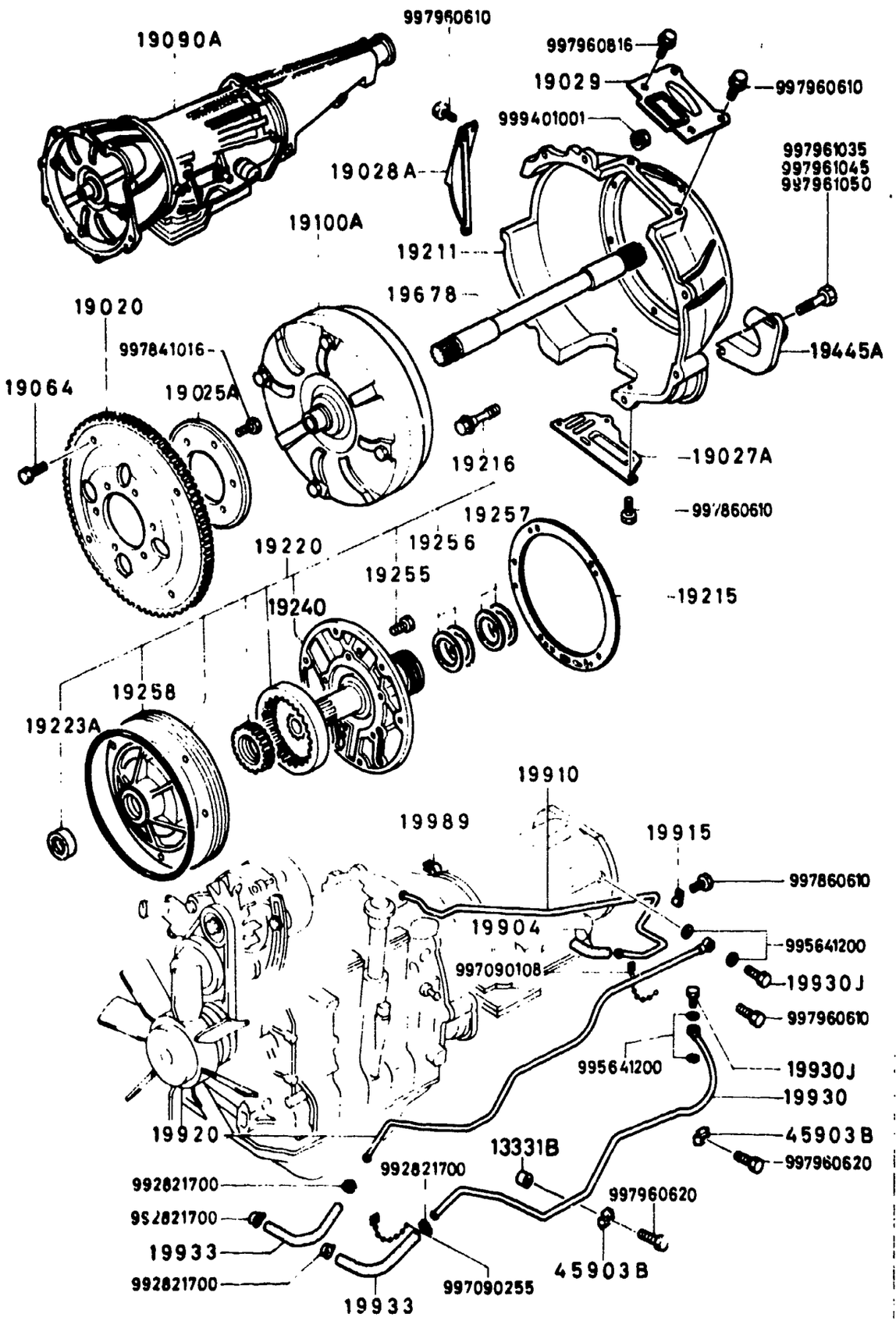

1910A-2 CONVERTER, OIL PUMP & PIPING (AUTOMATIC T/MISSION)

D-CODE (Key No.)	PART NAME	PART No.	Qty.	MODEL DESCRIPTION	VIN (Chassis No.)
19240	COVER CACHE COBERTOR	1758-19-240	1		
19255	BOLT BOULON PERNO	0338-19-255	5		
19256	RING, SEAL CERCLE ETANCHE ANILLO, SELLO	0338-19-256	2		
19257	RING, SEAL CERCLE ETANCHE ANILLO, SELLO	0338-19-257	2		
19258	SEAL, CUT RING JOINT SELLO, ANILLO CORTADO	0338-19-258	1		
19445A	BRACKET, STARTER SUPPORT DE DEMARREUR	8872-19-445A	1		
19678	SHAFT, INPUT ARBRE DE PRISE EJE, ENTRADA	0338-19-678	1		
19904	HOSE, VACUUM DURITE DE DEPRESSION MANGUERA, VACIO	0338-19-904A	1		
19910	PIPE, VACUUM CONDUIT A VIDE TUBO VACIO	8872-19-911	1		
19915	CLIP ATTACHE PRENSA TRABA GAZA	0842-19-915A	1		
19920	PIPE, OIL CONDUIT, HUILE TUBO, ACEITE	8872-19-920	1		
19930	PIPE, OIL CONDUIT, HUILE TUBO, ACEITE	8872-19-930	1	79 MODEL	SA22C .. 500001 -563500
		8672-19-930A	1	80 MODEL	SA22C .. 563501-
19930J	BOLT, CONNECTOR BOULON DE RACCORD PERNO CONECTOR	9938-10-800	2		
19933	HOSE, OIL FLEXIB. D'HUILE MANGUERA, ACEITE	1840-19-933	2	80 MODEL	SA22C .. 568501-

1910A CONVERTER, OIL PUMP & PIPING (AUTOMATIC T/MISSION)

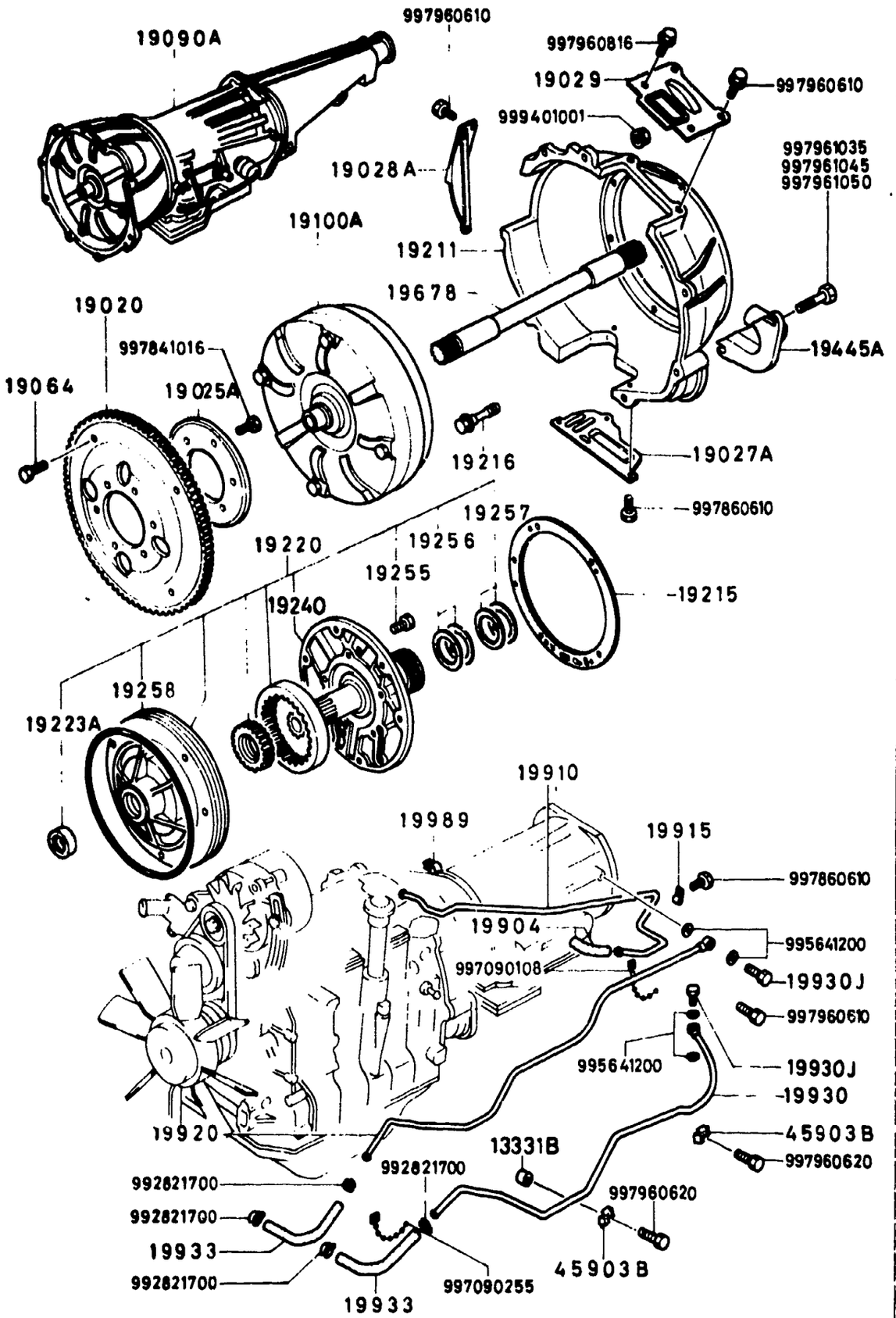

1910A-3* CONVERTER, OIL PUMP & PIPING (AUTOMATIC T/MISSION)

D-CODE (Key No.)	PART NAME	PART No.	Qty.	MODEL DESCRIPTION	VIN (Chassis No.)
19933 CONT'D		3954-19-933	2	79 MODEL	SA22C .. 500001 -563500
19989	CLIP ATTACHE PRENSA TRABA GAZA	2579-19-989	1		
45903B	CLIP ATTACHE PRENSA TRABA GAZA	0866-45-903A	3		

1920A CASE & MAIN CONTROLS (AUTOMATIC T/MISSION)

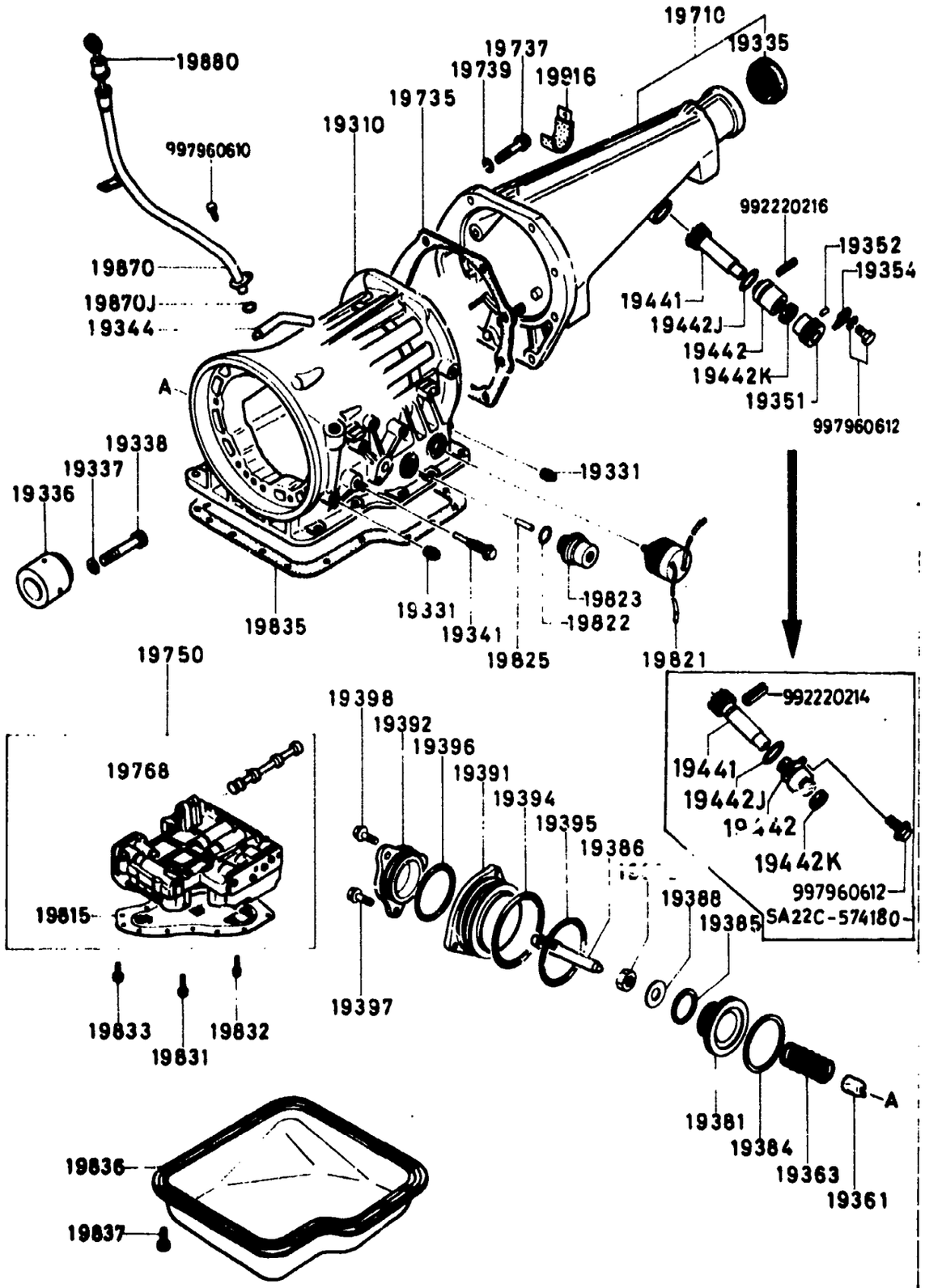

1920A-1 CASE & MAIN CONTROLS (AUTOMATIC T/MISSION)

D-CODE (Key No.)	PART NAME	PART No.	Qty.	MODEL DESCRIPTION	VIN (Chassis No.)
19310	CASE,T/MISSION BOITIER, TRANSMISSION CAJA DE TRANSMISION	1758-19-310B	1		SA22C .. 500001 -559739
		1758-19-310C	1		SA22C .. 559740-
19331	PLUG,SQUARE HEAD BOUCHON CARRE TAPON DE CABEZA CUADRADA	0338-19-331A	3		
19335	SEAL,OIL ARRET D'HUILE RETEN,ACEITE	0437-17-335	1		
19336	RACE,INNER BAGUE DE ROULEMENT,INTERI PISTA,INTERIOR	0338-19-336	1		
19337	WASHER,PLAIN RONDELLE ARANDELA,SIMPLE	0338-19-337	8		
19338	BOLT BOULON PERNO	0338-19-338	8		
19341	BOLT,ANCHOR END VERROU D'EXCENTRIQUE PERNO,ANCLAJE FINAL	1758-19-341	1		
19344	BREATHER,AIR RESPIRATEUR, AIR RESPIRADOR,AIRE	0378-19-344	1		
19351	JOINT,SPEEDOMETER RACCORD COMPTEUR	1011-17-351	1		SA22C .. 500001 -574179
19352	PIN,DOWEL GOUJON ALINEADOR, EJE	0187-17-352	1		SA22C .. 500001 -574179
19354	PLATE,LOCK PLAQUE DE FIXATION PLACA - CIERRE	0111-17-354	1		SA22C .. 500001 -574179
19361	STRUT,BAND MONTANT PUNTAL,BANDA	0338-19-361	1		SA22C .. 500001 -568318
		0338-19-361B	1		SA22C .. 568319-
19363	SPRING,PISTON RETURN RESSORT DE RAPPEL, PISTON RESORTE,RETORNO DE PISTON	0338-19-363	1		
19381	PISTON,BAND SERVO GUIDE	0842-19-381	1		

1920A CASE & MAIN CONTROLS (AUTOMATIC T/MISSION)

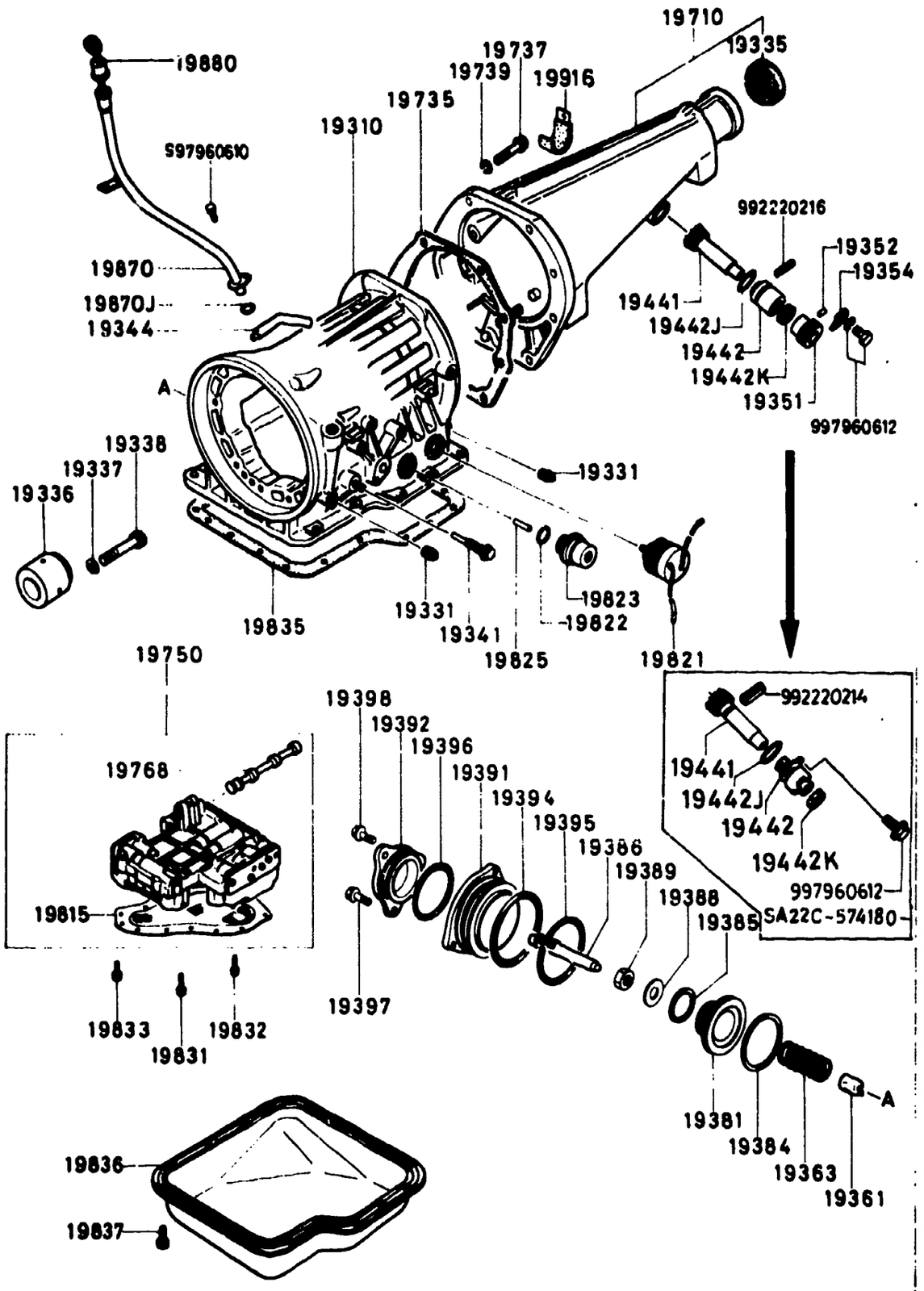

1920A-2 CASE & MAIN CONTROLS (AUTOMATIC T/MISSION)

D-CODE (Key No.)	PART NAME	PART No.	Qty.	MODEL/DESCRIPTION	VIN (Chassis No.)
19381 CONT'D	PISTON BANDA DEL SERVO	0842-19-381			
19384	SEAL,PISTON JOINT, PISTON SELLO,PISTON	0338-19-384	1		
19385	SEAL,PISTON JOINT, PISTON SELLO,PISTON	0842-19-385	1		
19386	STEM,PISTON TIGE, PISTON VASTAGO	1758-19-386	1		
19388	WASHER,PLAIN RONDELLE ARANDELA,SIMPLE	0338-19-388A	1		
19389	NUT ECROU TUERCA	0338-19-389	1		
19391	RETAINER,SERVO SUPPORT DE SERVO RETENTOR,SERVO	1758-19-391A	1		
19392	COVER,SERVO CHAPEAU, SERVO COBERTOR DE SERVO	1758-19-392A	1		
19394	SEAL,LEATHER CUT JOINT, CUIR SELLO,CUERO CORTADO	0842-19-394	1		
19395	RING,'O' JOINT 'O' SELLO DE GOMA 'O'	0338-19-395	1		
19396	RING,'O' JOINT 'O' SELLO DE GOMA 'O'	1758-19-394A	1		
19397	BOLT BOULON PERNO	0338-19-397	4		
19398	BOLT BOULON PERNO	1758-19-397	3		
19441	GEAR,DRIVEN PIGNON D'ENTRAINEMENT ENGRANAJE, IMPULSADOR	8057-17-441	1		SA22C .. 500001 -569398
	<AN>	8057-17-441A	1		SA22C .. 569399 -574179

1920A CASE & MAIN CONTROLS (AUTOMATIC T/MISSION)

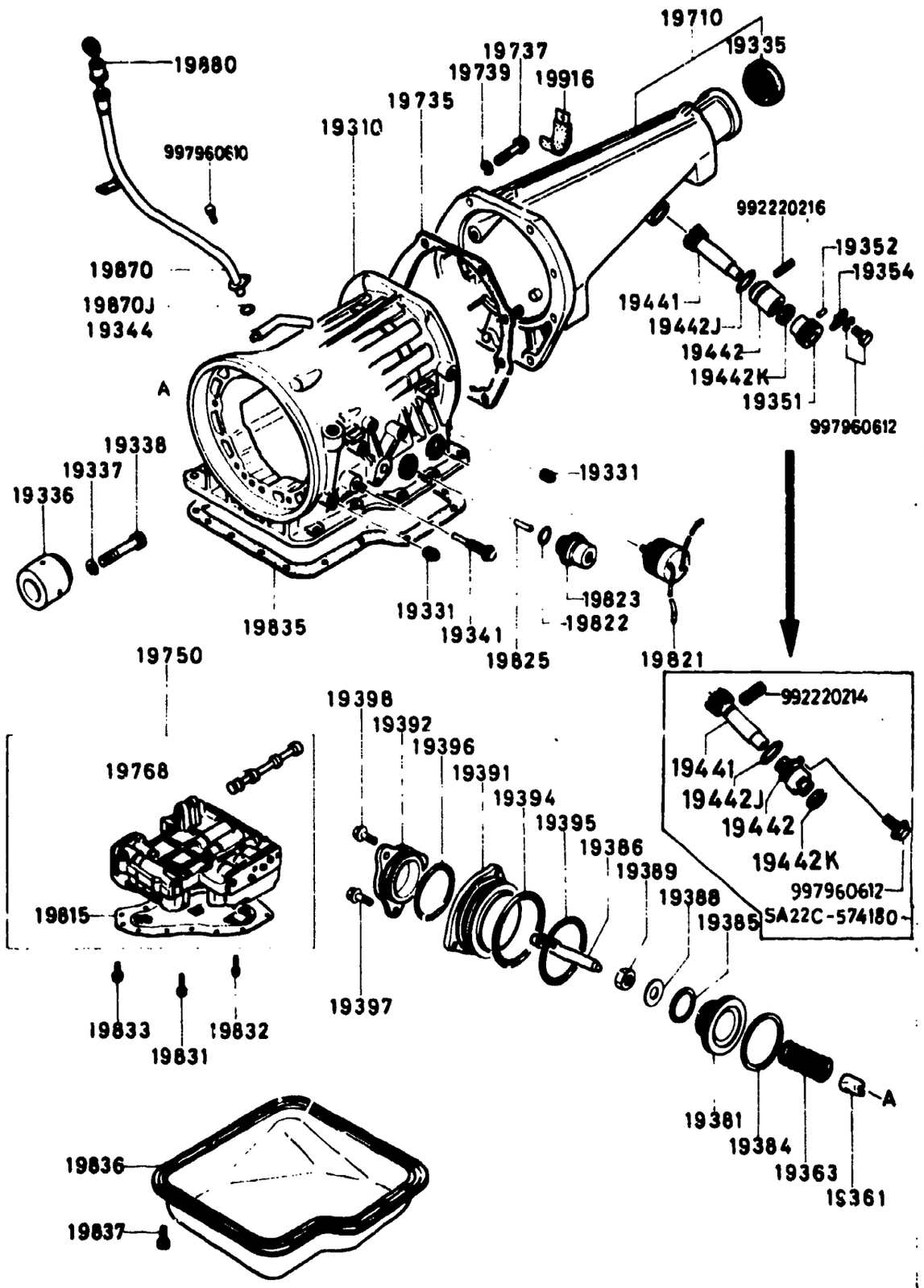

1920A-3 CASE & MAIN CONTROLS (AUTOMATIC T/MISSION)

D-CODE (Key No.)	PART NAME	PART No.	Qty.	MODEL DESCRIPTION	VIN (Chassis No.)
19441 CONT'D		8057-17-441B	1		SA22C .. 574180-
19442	SLEEVE,SPEEDO GEAR BAGUE PIGNON COMPTEUR	0862-17-442	1		SA22C .. 500001 -574179
		1011-17-442	1		SA22C .. 574180-
19442J	RING,'O' JOINT'O'	1011-17-443	1		SA22C .. 574180-
		9954-10-2211	1		SA22C .. 500001 -574179
19442K	SEAL,OIL RETEN,ACEITE SELLO DE GOMA 'O'	9958-60-8166	1		SA22C .. 574180-
		9958-61-0207	1		SA22C .. 500001 -574179
19710	HOUSING,EXTENSION RALLONGE DE BOITE CASCO EXTENSION	1840-19-710	1		
19735	GASKET,EXTENSION JOINT, RALLONGE EMPAQUE, EXTENSION	0338-19-735	1		
19737	BOLT BOULON PERNO	0338-19-737	6		
19739	WASHER,PLAIN RONDELLE PLATE ARANDELA,SIMPLE	0338-19-739	6		
19750	VALVE,CONTROL SOUPAPE, CONTROLE VALVULA,CONTROL	3649-19-750	1		
19768	VALVE,MANUAL SOUPAPE, MANUEL VALVULA,MANUAL	0338-19-768	1		
19815	STRAINER,OIL TAMIS D'HUILE CEDAZO,ACEITE	1758-19-815	1		
19821	SOLENOID,DOWN SHIFT SOLENOIDE, CONTROLE DE VI SOLENOIDE,CAMBIO BAJO	1675-19-821	1		

1920A CASE & MAIN CONTROLS (AUTOMATIC T/MISSION)

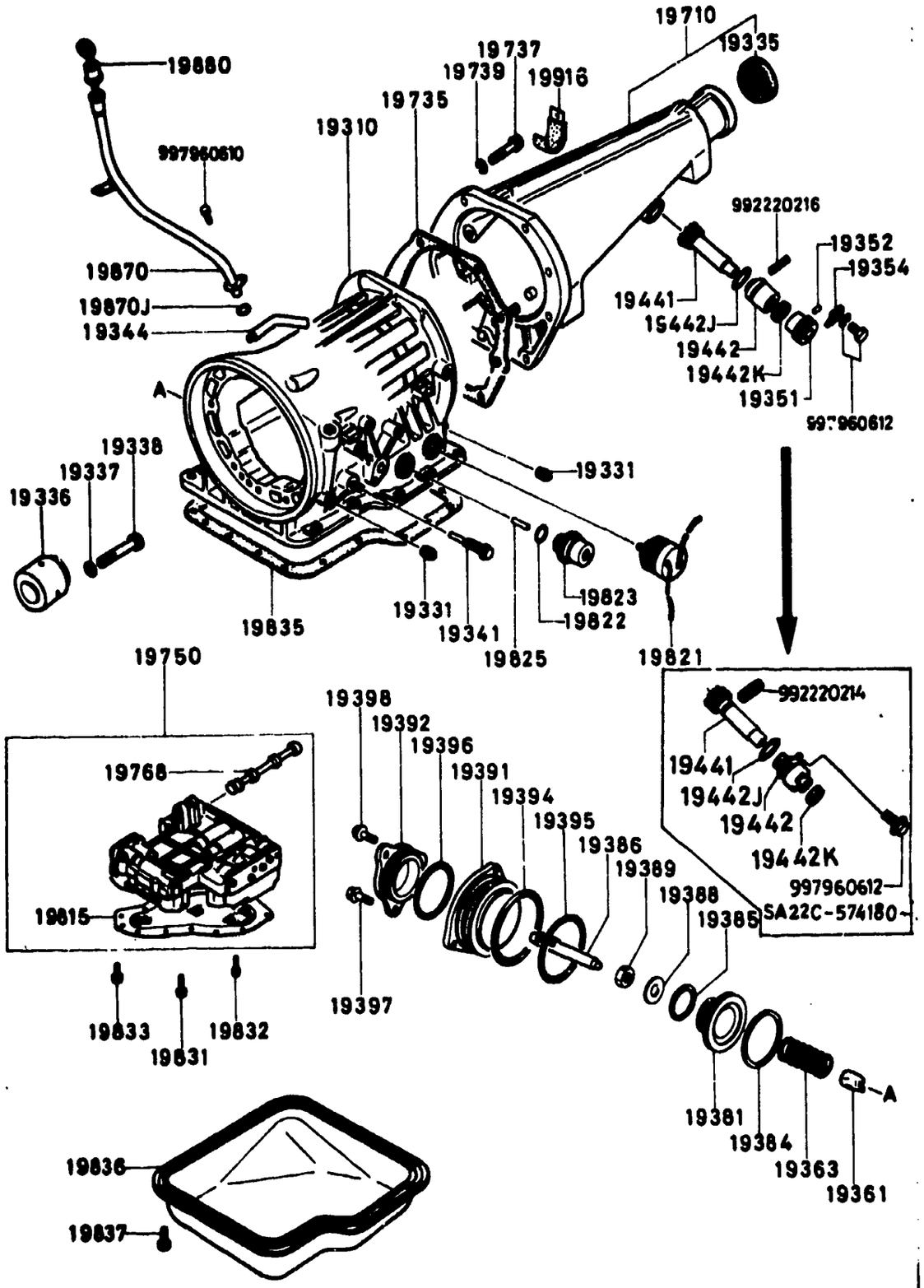

1920A-4 CASE & MAIN CONTROLS (AUTOMATIC T/MISSION)

D-CODE (Key No.)	PART NAME	PART No.	Qty.	MODEL/DESCRIPTION	VIN (Chassis No.)
19822	SEAL,'O'RING JOINT 'O' SELLO DE GOMA 'O'	0338-19-822	2		
19823	DIAPHRAGM,VACUUM DIAPHRAGME DE DEPRESSION DIAFRAGMA DE VACIO	1758-19-823	1		
19825	ROD,DIAPHRAGM PIVOT DIAPHRAGME	0338-19-825	1	(L=30.0)	
		0338-19-826	1	(L=31.0)	
		0338-19-827	1	(L=30.5)	
		0338-19-828	1	(L=29.0)	
		0338-19-829	1	(L=29.5)	
19831	BOLT,CONTROL VALVE BOULON DE SOUPAPE DE CONT PERNO,VALVULA DE CONTROL	0338-19-831	4		
19832	BOLT,CONTROL VALVE BOULON DE SOUPAPE DE CONT PERNO,VALVULA DE CONTROL	0338-19-832	2		
19833	BOLT,CONTROL VALVE BOULON DE SOUPAPE DE CONT PERNO,VALVULA DE CONTROL	0338-19-833	3		
19835	GASKET,OIL PAN JOINT, CARTER HUILE EMPAQUE, CARTER	1758-19-835	1		
19836	PAN,OIL CARTER D'HUILE CARTER	1758-19-836	1		
19837	BOLT,OIL PAN	0338-19-837	17		
19870	TUBE,OIL LEVEL TUBE, JAUGE D'HUILE TUBO,NIVEL ACEITE	8872-19-870A	1		
19870J	RING,'O' JOINT'O'	9954-10-1601	1		
19880	GAUGE,OIL LEVEL JAUGE, NIVEAU D'HUILE	8872-19-880	1		

1920A CASE & MAIN CONTROLS (AUTOMATIC T/MISSION)

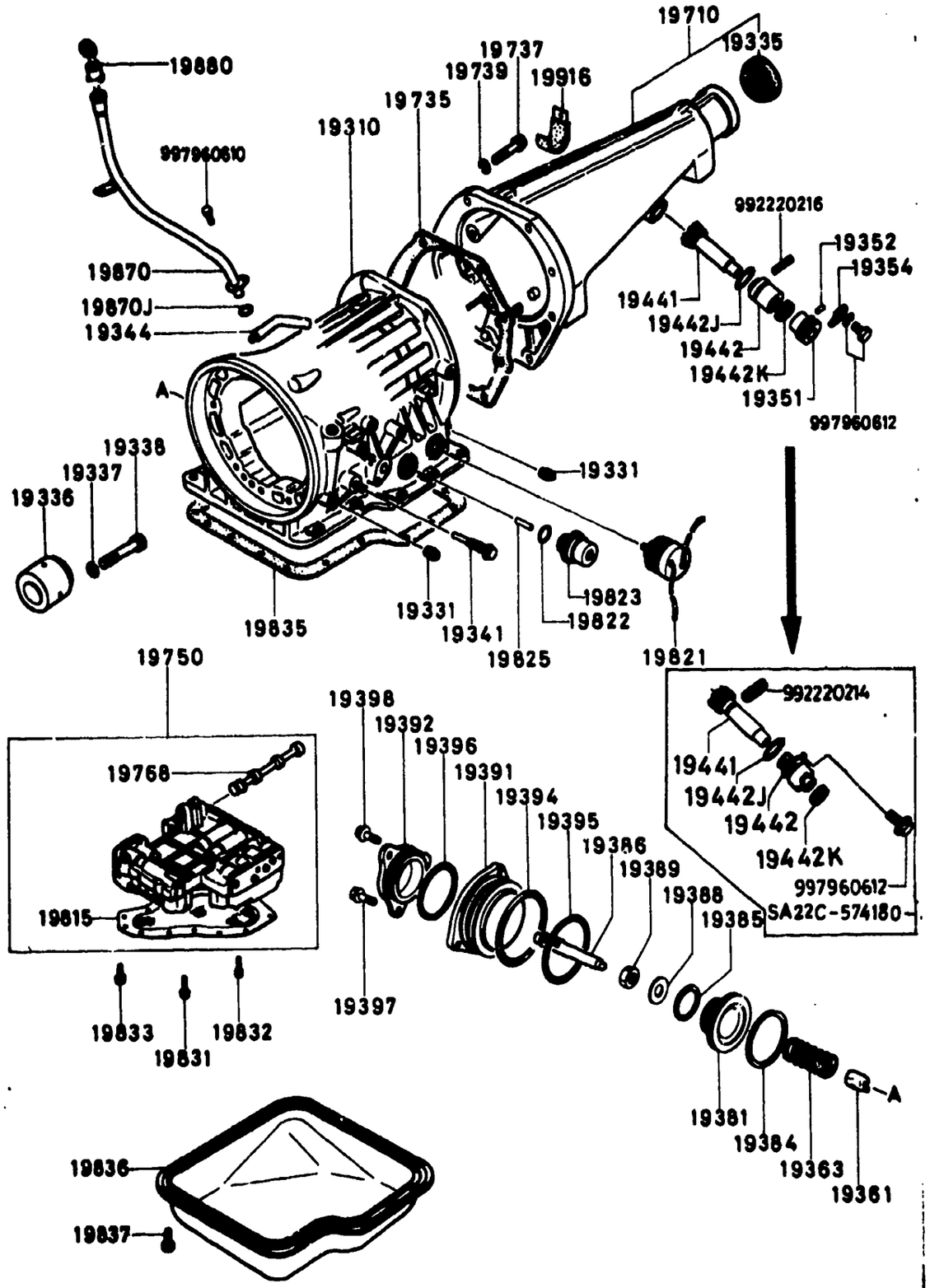

1920A-5* CASE & MAIN CONTROLS (AUTOMATIC T/MISSION)

D-CODE (Key No.)	PART NAME	PART No.	Qty.	MODEL/DESCRIPTION	VIN (Chassis No.)
19880 CONT'D	MANOMETRO, NIVEL ACEITE	8872-19-880			
19916	CLIP ATTACHE PRENSA TRABA GAZA	3879-19-916	1		
				AN OVERHAUL GASKET SET HAS BEEN ESTABLISHED. IT IS AVAILABLE UNDER PART NUMBER AT09-99-190	

1930A CLUTCH & PLANETARY GEAR (AUTOMATIC T/MISSION)

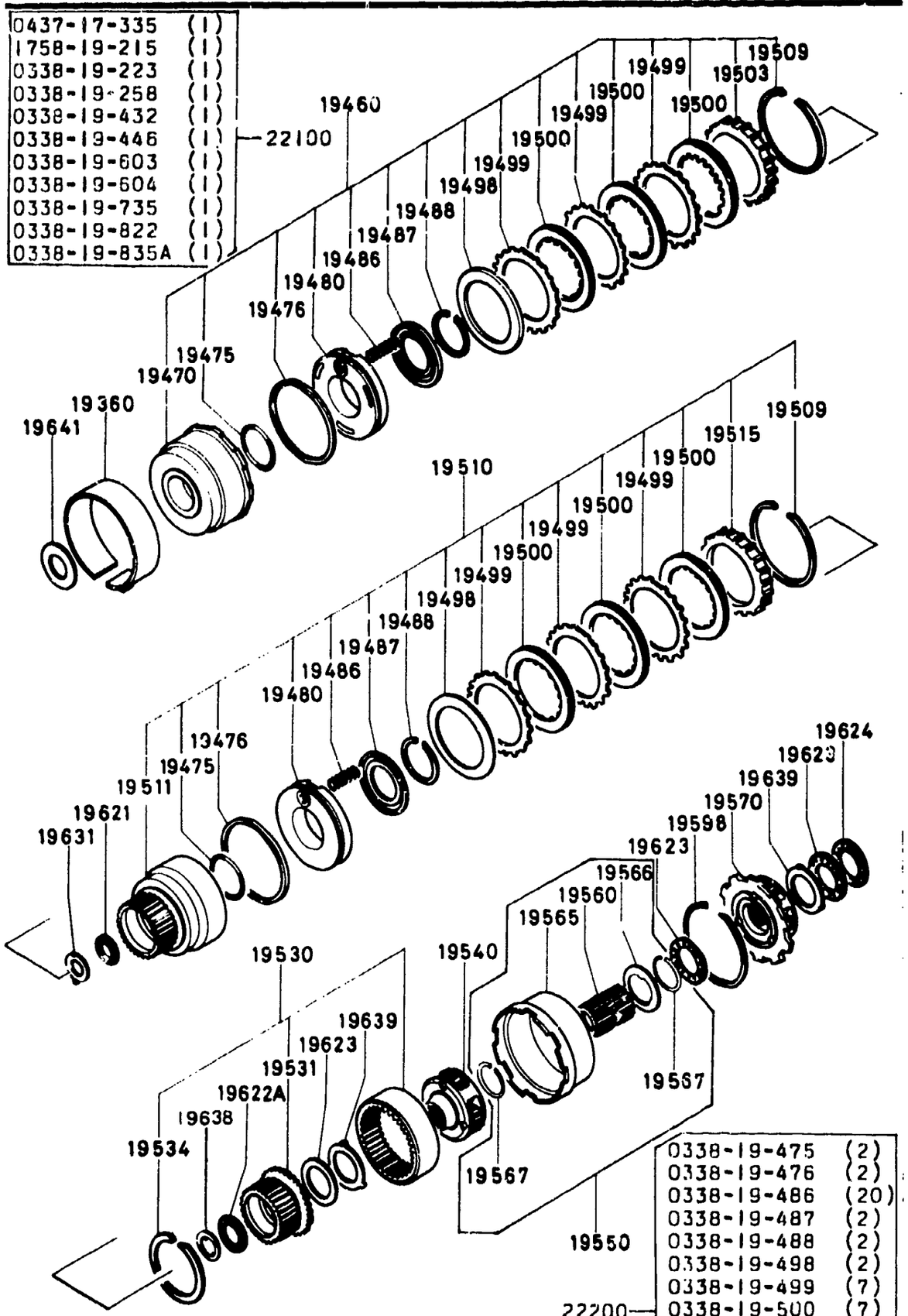

1930A-1 CLUTCH & PLANETARY GEAR (AUTOMATIC T/MISSION)

D-CODE (Key No.)	PART NAME	PART No.	Q'ty	MODEL DESCRIPTION	VIN (Chassis No.)
19360	BAND,BRAKE COLLIER DE SERRAGE BANDA,FRENO	0338-19-360A	1		SA22C .. 500001 -563318
		0338-19-360B	1		SA22C .. 568319-
19460	CLUTCH,FRONT EMBRAYAGE AV. BOITEAUT FRENTE EMBRAGUE	3959-19-460	1		SA22C .. 500001 -612775
	<AN>	*3959-19-460A	1		SA22C .. 612776-
19470	DRUM,CLUTCH TAMBOUR D'EMBRAYAGE TAMBOR DEL EMBRAGUE	3959-19-470	1		SA22C .. 500001 -612775
		*3959-19-470A	1		SA22C .. 612776-
19475	SEAL,'O'RING JOINT 'O' SELLO DE GUMA 'O'	0338-19-475	2		
19476	SEAL,LEATHER CUT JOINT, CUIR SELLO,CUERO CORTADO	0338-19-476	2		
19480	PISTON,CLUTCH PISTON,CYLINDRE EMBRAYAGE PISTON, EMBRAGUE	0338-19-480	2		
19486	SPRING,PISTON RETURN RESSORT DE RAPPEL, PISTON RESORTE,RETORNO DE PISTON	0338-19-486	20		
19487	RETAINER,SPRING ARRET DE RESSORT RETENTOR,RESORTE	0338-19-487	2		
19488	RING,SNAP CALE ANILLO,SEGURO	0338-19-488	2		
19498	PLATE,DISHED RONDELLE BOMBEE PLATO AHONDADO	0338-19-498	2		
19499	PLATE,DRIVEN DISQUE EXT., BTE AUTOM. PLATO EMPUJADO	0338-19-499	6		
19500	PLATE,DRIVE DISQUE, BOITE AUTOM. PLATO EMPUJE	0338-19-500A	6		
19503	PLATE,RETAINING ARRETOIR	1758-19-503	1	(T=7.2)	SA22C ..

1930A CLUTCH & PLANETARY GEAR (AUTOMATIC T/MISSION)

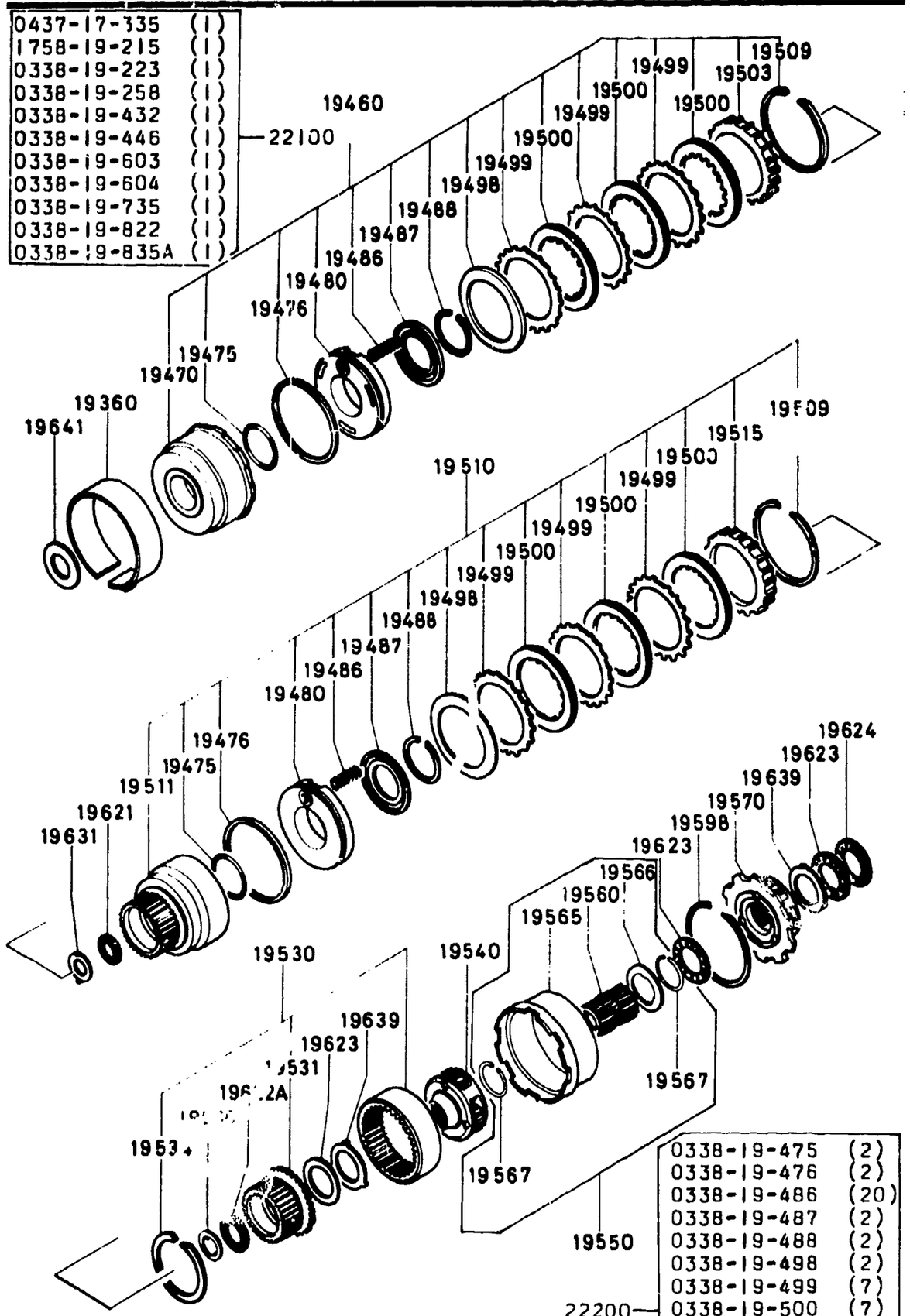

1930A-2 CLUTCH & PLANETARY GEAR (AUTOMATIC T/MISSION)

D-CODE (Key No.)	PART NAME	PART No.	Qty.	MODEL DESCRIPTION	VIN (Chassis No.)
19503 CONT'D	PLACA DE RETENIDO	1758-19-503			500001 -612775
		1758-19-504	1	(T=7.4)	SA22C .. 500001 -612775
		1758-19-505	1	(T=7.6)	SA22C .. 500001 -612775
		1758-19-506	1	(T=7.8)	SA22C .. 500001 -612775
		1758-19-507	1	(T=8.0)	SA22C .. 500001 -612775
		1758-19-508	1	(T=8.2)	SA22C .. 500001 -612775
		*3959-19-503	1	(T=5.0)	SA22C .. 612776-
		*3959-19-504	1	(T=5.2)	SA22C .. 612776-
		*3959-19-505	1	(T=5.4)	SA22C .. 612776-
		*3959-19-506	1	(T=5.6)	SA22C .. 612776-
		*3959-19-507	1	(T=5.8)	SA22C .. 612776-
		*3959-19-508	1	(T=6.0)	SA22C .. 612776-
		*3959-19-509	1	(T=6.2)	SA22C .. 612776-
19509	RING,SNAP CALE	0338-19-509	2		

1930A CLUTCH & PLANETARY GEAR (AUTOMATIC T/MISSION)

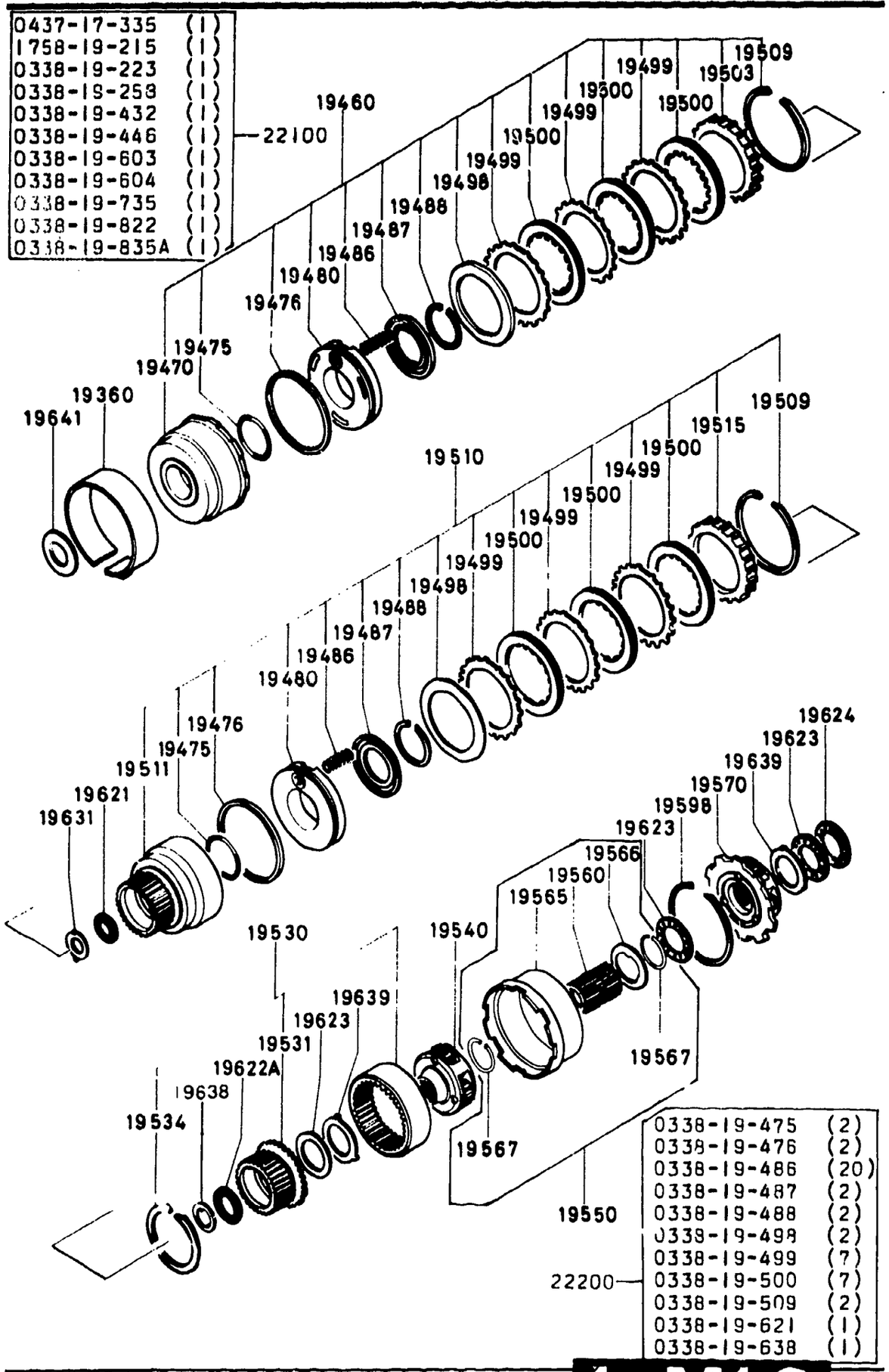

1930A-3 CLUTCH & PLANETARY GEAR (AUTOMATIC T/MISSION)

D-CODE (Key No.)	PART NAME	PART No.	Qty.	MODEL DESCRIPTION	VIN (Chassis No.)
19509 CONT'D	ANILLO,SEGURO	0338-19-509			
19510	CLUTCH,REAR EMBRAYAGE ARR., BOITE AUT EMBRAGUE TRASERO	0338-19-510	1		
19511	DRUM,REAR CLUTCH TAMBOUR D'EMBRAYAGE (ARR. TAMBOR DEL EMBRAGUE INFER	0338-19-511	1		
19515	PLATE,RETAINING ARRETOIR PLACA DE RETENIDO	0338-19-515	1		
19530	HUB,REAR CLUTCH PIGNON FIXE DE RENVOI PATENTE EMBRAGUE TRAS.	0338-19-530	1		
19531	HUB,REAR CLUTCH PIGNON FIXE DE RENVOI PATENTE EMBRAGUE TRAS.	0338-19-531	1		
19534	RING,SNAP CALE ANILLO,SEGURO	0338-19-534	1		
19540	CARRIER,FRONT SUPPORT AV. SOPORTE,DELANTERO	0338-19-540	1		
19550	GEAR,SHELL & SUN COQUILLE ET PIGNON SOLEIL CASCO Y PLANETARIO	0338-19-550	1		
19560	GEAR,SUN PIGNON ENGRANAJE, PLANETARIO	0338-19-560	1		
19565	SHELL,CONNECTING COUVERCLE CASCO,CONECCION	0338-19-565	1		
19566	RACE,SHELL BEARING BAGUE DE ROULEMENT PISTA,CUBIERTA DE RODAMIE	0338-19-566	1		
19567	RING,SNAP CALE ANILLO,SEGURO	0338-19-567	2		
19570	CARRIER,REAR SUPPORT ARR.	0338-19-570	1		
19598	RING,SNAP CALE ANILLO,SEGURO	0338-19-598	1		

1930A CLUTCH & PLANETARY GEAR (AUTOMATIC T/MISSION)

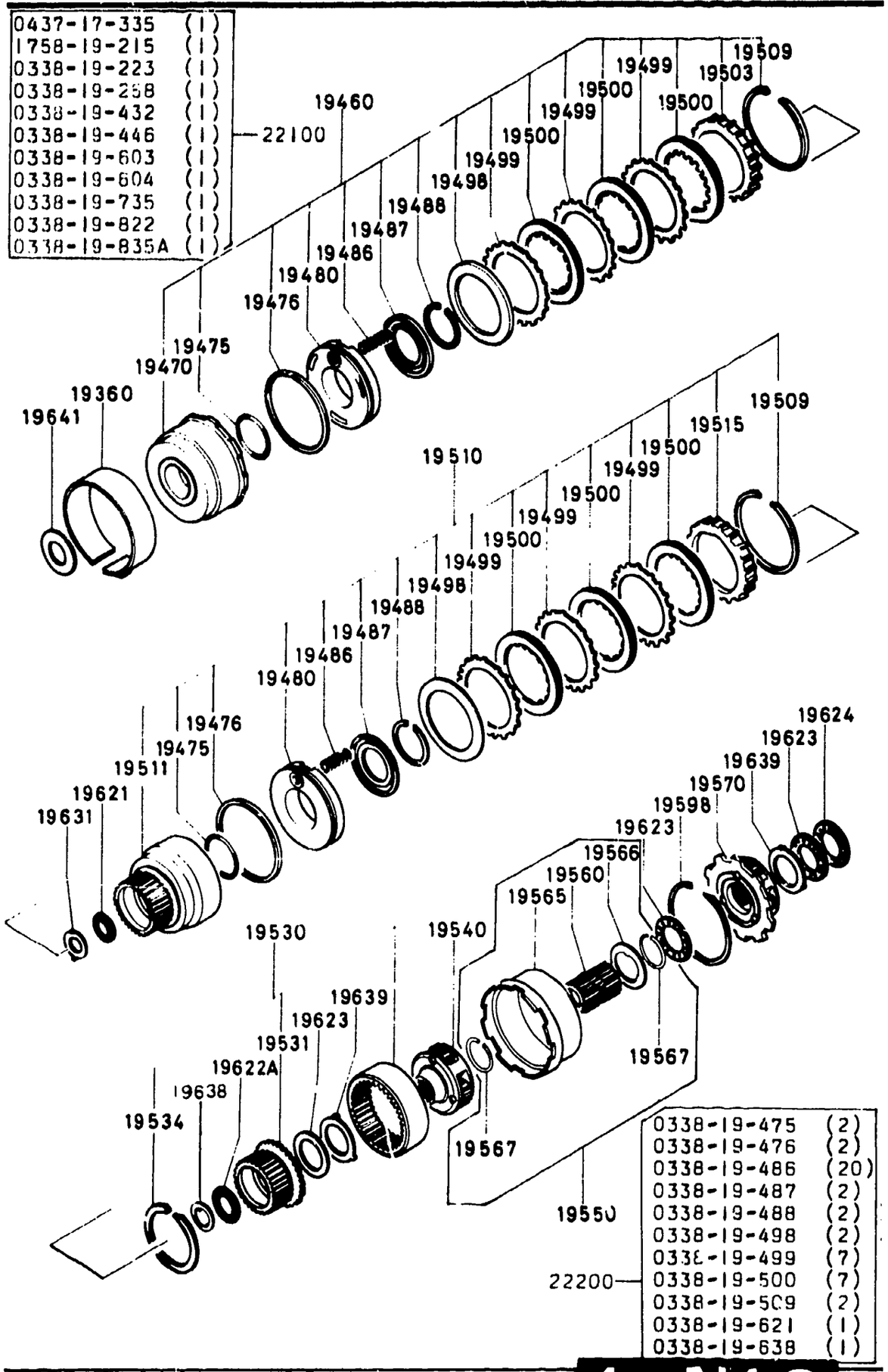

1930A-4 CLUTCH & PLANETARY GEAR (AUTOMATIC T/MISSION)

D-CODE (Key No.)	PART NAME	PART No.	Qty.	MODEL DESCRIPTION	VIN (Chassis No.)
19621	BEARING,NEEDLE ROULEMENT RODAMIENTO DE AGUJAS	0338-19-621	1	80 MODEL	
19622A	BEARING,NEEDLE ROULEMENT RODAMIENTO DE AGUJAS	0338-19-622	2	80 MODEL	
19623	BEARING,NEEDLE ROULEMENT RODAMIENTO DE AGUJAS	0338-19-623	3	80 MODEL	
19624	BEARING,NEEDLE ROULEMENT RODAMIENTO DE AGUJAS	0338-19-624	1	80 MODEL	
19631	RACE,BRG.PUMP COVER CAGE ROULEMENT	0338-19-631	1	(T=1.2)	
		0338-19-632	1	(T=1.4)	
		0338-19-633	1	(T=1.6)	
		0338-19-634	1	(T=1.8)	
		0338-19-635	1	(T=2.0)	
		0338-19-636	1	(T=2.2)	
19638	RACE,BRG.RR.CLUTCH CAGE ROULEMENT EMBRAYAGE	0436-19-656	2		
19639	RACE,BEARING BAGUE DE ROULEMENT	0338-19-639	2		
19641	WASHER,FRONT CLUTCH RONDELLE EMBRAYAGE AV.	0338-19-641	1	(T=1.9)	
		0338-19-642	1	(T=2.1)	
		0338-19-643	1	(T=2.3)	
		0338-19-644	1	(T=2.5)	
		0338-19-645	1	(T=2.7)	

SECTION NUMBER INDEX (ENGINE)

STARTING LOCATION	SECTION No.	SECTION NAME
1–C2	1000A	SHORT ENGINE & GASKET SET
1–D2	1030A	ROTOR HOUSING
1–G2	1040A	HOUSING (FRONT & REAR)
1–C3	1100A	ECCENTRIC SHAFT & FLYWHEEL
1–F3	1110A	ROTOR
1–C4	1300A	IN. MANIFOLD
1–D4	1310A	THERMAL REACTOR
1–E4	1320A	FUEL SYSTEM
1–G4	1330A	AIR CLEANER
1–H4	1350A	STARTING ASSIST SYSTEM
1–I4	1360A	CARBURETOR
1–F6	1371A	EMISSION CONTROLS (AIR PUMP & CONTROL VALVE)
1–H6	1380A	EMISSION CONTROLS (EX. SIDE)
1–C8	1400A	OIL PUMP & FILTER
1–F8	1500A	COOLING SYSTEM
1–K8	1600A	CLUTCH (MANUAL)
1–C9	1700A	T/MISSION CASE (MANUAL)
1–G9	1710A	T/MISSION GEAR (MANUAL)
1–E10	1720A	CHANGE CONTROLS (MANUAL)
1–C11	1800A	ELECTRICAL SYSTEM (ENGINE)
1–H11	1820A	DISTRIBUTOR
1–L11	1830A	ALTERNATOR
1–D12	1840A	STARTER
1–H12	1850A	BATTERY & CABLES
1–C13	1910A	CONVERTER, OIL PUMP & PIPING (AUTOMATIC T/MISSION)
1–F13	1920A	CASE & MAIN CONTROLS (AUTOMATIC T/MISSION)
1–K13	1930A	CLUTCH & PLANETARY GEAR (AUTOMATIC T/MISSION)
1–D14	1940A	LOW, REVERSE & GOVERNOR (AUTOMATIC T/MISSION)
1–G14	1950A	MANUAL LINKAGE (AUTOMATIC T/MISSION)

THE FRAMES IN THIS COLUMN INDICATE :

1–K13	1930A	CLUTCH & PLANETARY GEAR (AUTOMATIC T/MISSION)
1–D14	1940A	LOW, REVERSE & GOVERNOR (AUTOMATIC T/MISSION)
1–G14	1950A	MANUAL LINKAGE (AUTOMATIC T/MISSION)

© 1983 Toyo Kogyo Co., Ltd.
MAY 1983

1930A CLUTCH & PLANETARY GEAR (AUTOMATIC T/MISSION)

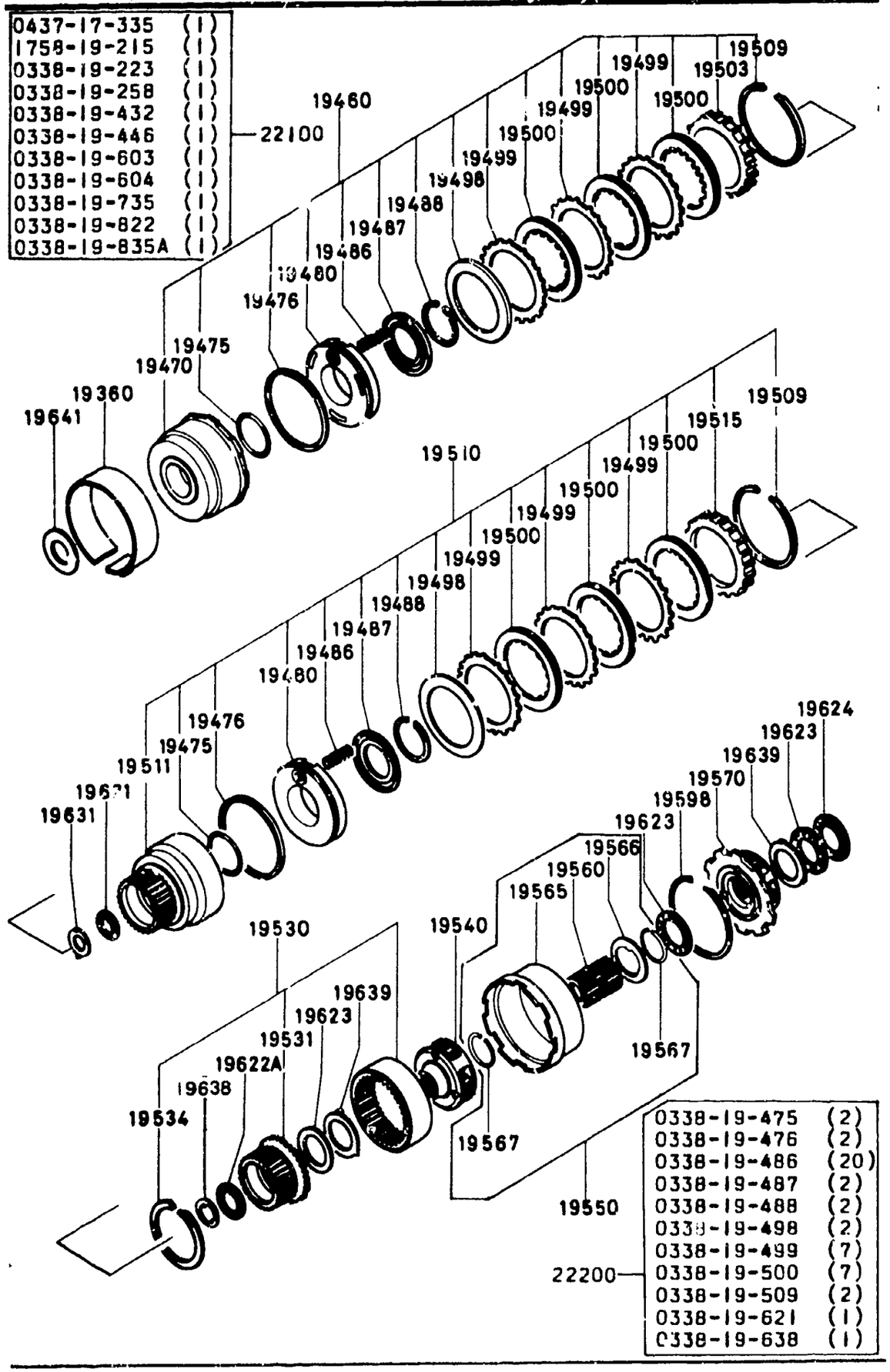

1>30A-5A CLUTCH & PLANETARY GEAR (AUTOMATIC T/MISSION)

D-CODE (Key No.)	PART NAME	PART No.	Qty.	MODEL/DESCRIPTION	VIN (Chassis No.)
19641 CONT'D		0338-19-646	1	(T=1.5)	
		0338-19-647	1	(T=1.7)	
		0338-19-648	1	(T=1.3)	
22100	GASKET & SEAL KIT	0397-22-100	1		
22200	CLUTCH REPAIR KIT	0397-22-200	1		

1940A LOW, REVERSE & GOVERNOR (AUTOMATIC T/MISSION)

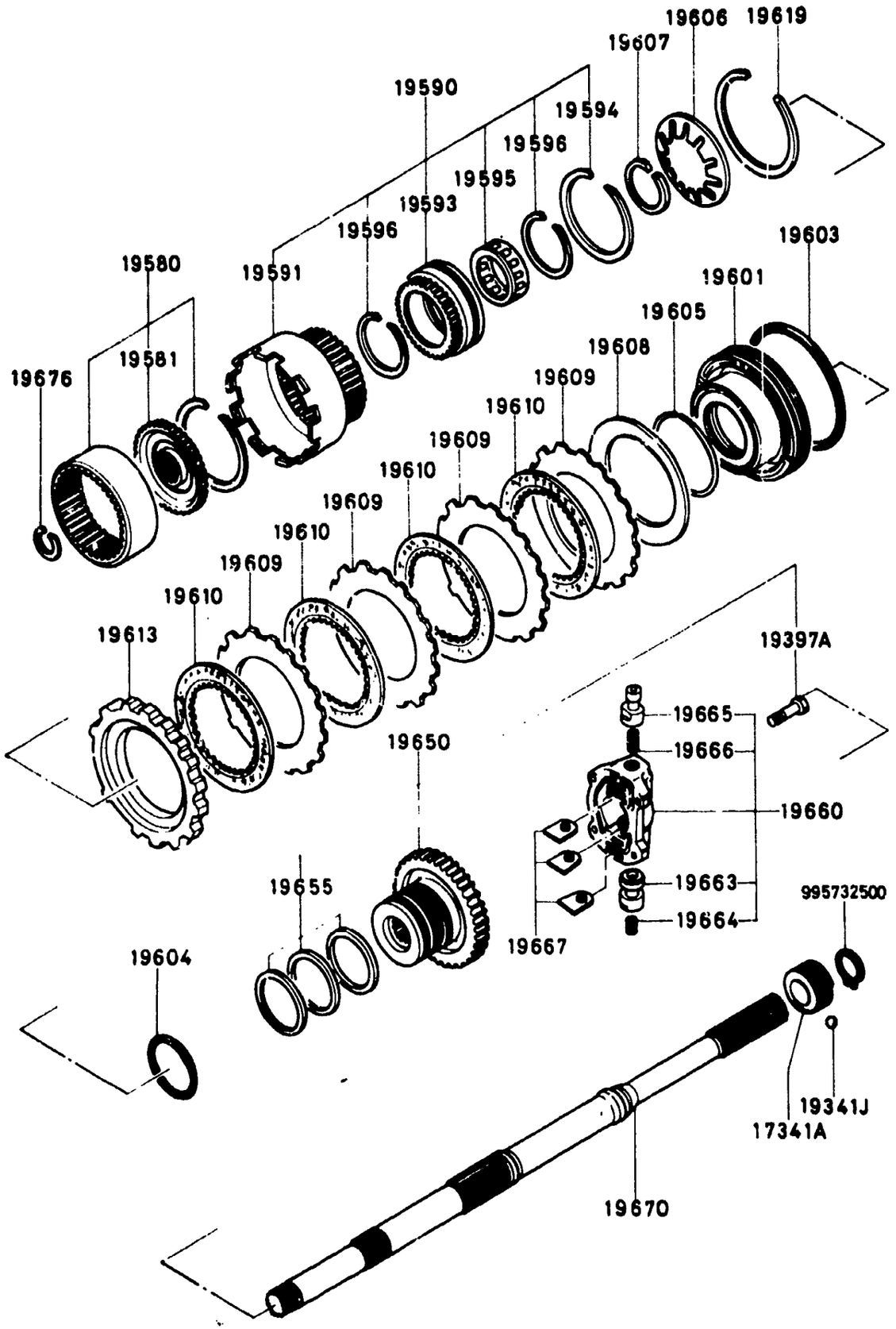

1940A-1 LOW, REVERSE & GOVERNOR (AUTOMATIC T/MISSION)

D-CODE (Key No.)	PART NAME	PART No.	Qty.	MODEL DESCRIPTION	VIN (Chassis No.)
17341A	GEAR, SPEEDO. DRIVE VIS DE COMMANDE COMPTEUR ENGRANAJE. IMPUL. VELOCIM	3728-17-341	1		SA22C .. 500001 -569398
	<AN>	3728-17-341A	1		SA22C .. 569399-
19341J	BALL, STEEL BILLE D'ACIER BOLA, ACERO	9961-11-500	1		
19397A	BOLT BOULON PERNO	0338-19-397	4		
19580	FLANGE BRIDE REBORDE	0338-19-580	1		
19581	FLANGE, DRIVE BRIDE BRIDA, PROPULSION	0338-19-581	1		
19590	DRUM, CONNECTING RACCORD DE TAMBOUR UNION PARA TAMBOR	0338-19-590	1		
19591	DRUM, CONNECTING RACCORD DE TAMBOUR UNION PARA TAMBOR	0338-19-591	1		
19593	RACE, OUTER BAGUE DE ROULEMENT, EXTERI PISTA, EXTERIOR	0338-19-593	1		
19594	RING, SNAP CALE ANILLO, SEGURO	0338-19-594	1		
19595	CLUTCH, ONE WAY EMBRAYAGE EMBRAGUE DE UNA VIA	0338-19-595	1		
19596	RING, SNAP CALE ANILLO, SEGURO	0338-19-596	2		
19601	PISTON, LOW & REVERSE PISTON 1ERE & MARCHE ARR PISTON, BAJA Y RETROCESO	0338-19-601	1		
19603	SEAL, PISTON JOINT, PISTON SELLO, PISTON	0338-19-603	1		
19604	SEAL, 'O' RING JOINT 'O' SELLO DE GOMA 'O'	0338-19-604	1		

1940A LOW, REVERSE & GOVERNOR (AUTOMATIC T/MISSION)

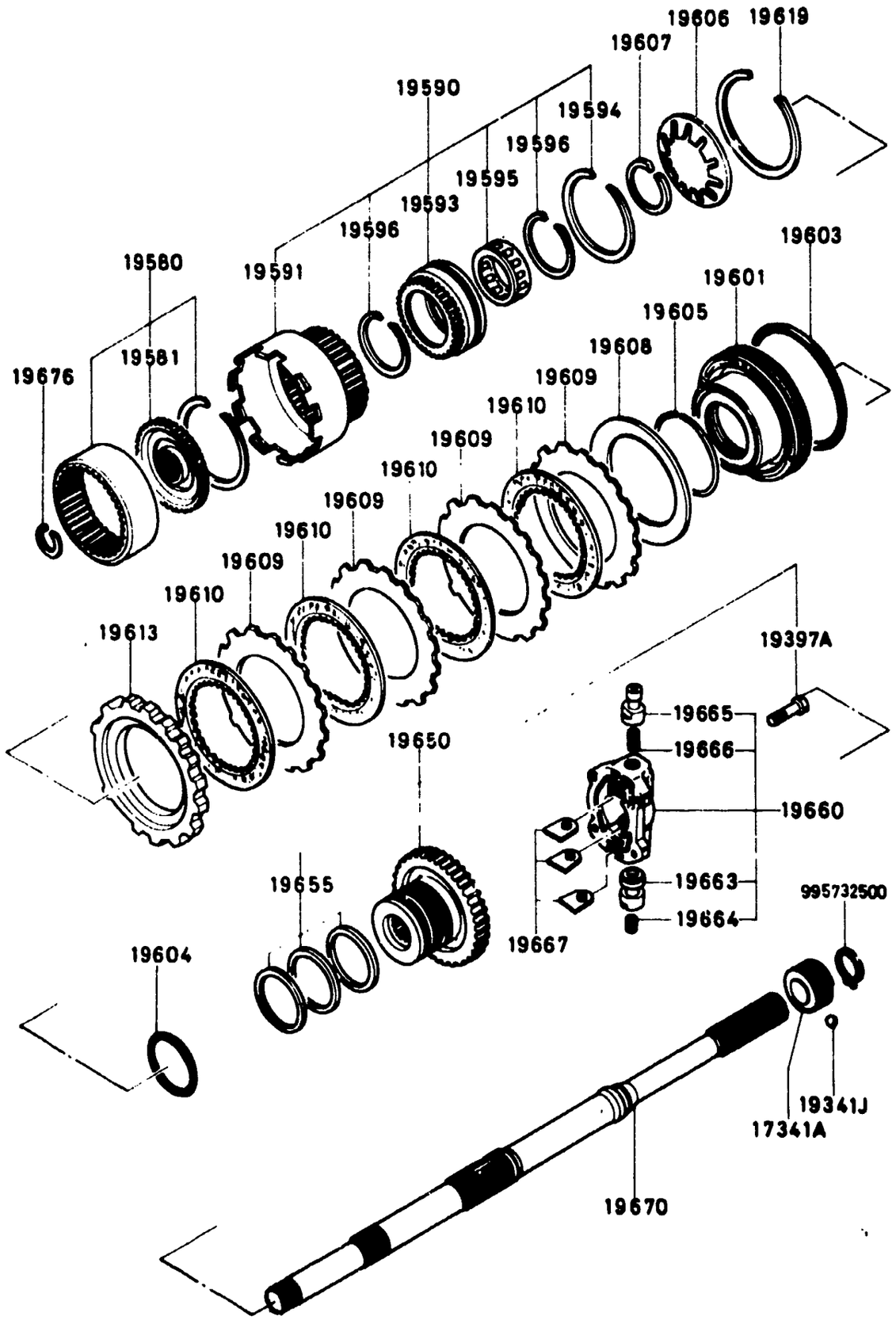

1940A-2 LOW, REVERSE & GOVERNOR (AUTOMATIC T/MISSION)

D-CODE (Key No.)	PART NAME	PART No.	Qty.	MODEL DESCRIPTION	VIN (Chassis No.)
19605	RING, THRUST SPRING BAGUE, RESSORT DE POUSSEE ARO, RESORTE PRICIPAL	0338-19-605	1		
19606	SPRING, PISTON RESSORT DE PISTON RESORTE, PISTON	0338-19-606	1		
19607	RING, SNAP CALE ANILLO, SEGURO	0338-19-607	1		
19608	PLATE, DISHED RONDELLE BOMBEE PLATO AHONDADO	0338-19-608	1		
19609	PLATE, DRIVEN DISQUE EXT., BTE AUTOM. PLATO EMPUJADO	0338-19-609	4		
19610	PLATE, DRIVE DISQUE, BUITE AUTOM. PLATO EMPUJE	0338-19-610A	4		
19613	PLATE, RETAINING ARRETOIR PLACA DE RETENIDO	1758-19-613	1	(T=7.8)	
		1758-19-614	1	(T=8.0)	
		1758-19-615	1	(T=8.2)	
		1758-19-616	1	(T=8.4)	
		1758-19-617	1	(T=8.6)	
		1758-19-618	1	(T=8.8)	
19619	RING, SNAP CALE ANILLO, SEGURO	0338-19-619	1		
19650	DISTRIBUTOR, OIL REPARTITEUR D'HUILE DISTRIBUIDOR DE ACEITE	0842-19-650	1		
19655	RING, SEAL CERCLE ETANCHE ANILLO, SELLO	0338-19-655	3		
19660	GOVERNOR REGULATEUR GOVERNADOR	0842-19-660	1		

1940A LOW, REVERSE & GOVERNOR (AUTOMATIC T/MISSION)

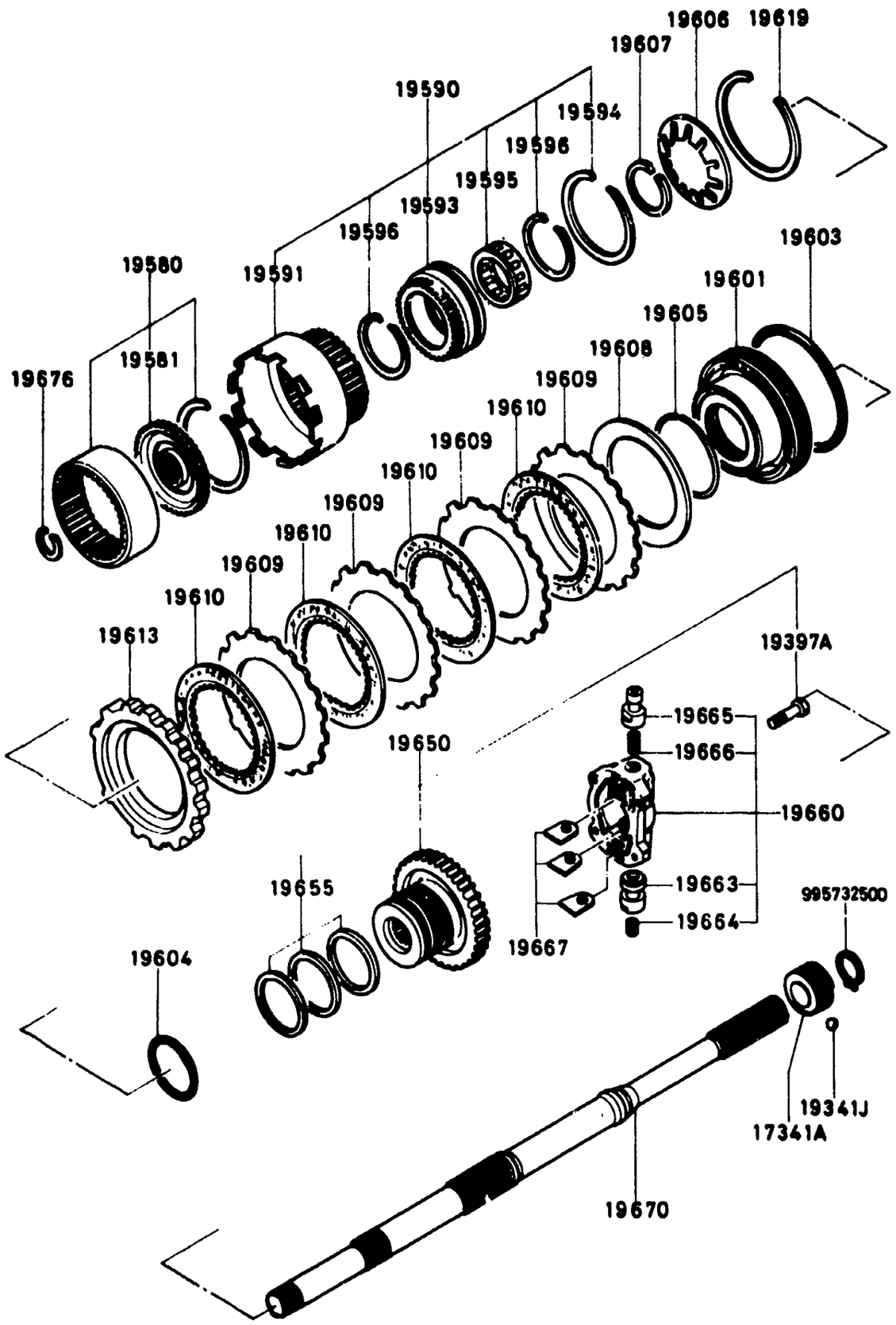

1940A-3* LOW, REVERSE & GOVERNOR (AUTOMATIC T/MISSION)

D-CODE (Key No.)	PART NAME	PART No.	Qty.	MODEL DESCRIPTION	VIN (Chassis No.)
19663	VALVE SOUPAPE VALVULA	0338-19-663	1		
19664	SPRING RESSORT RESORTE	0338-19-664	1		
19665	VALVE SOUPAPE VALVULA	0842-19-665	1		
19666	SPRING, GOVERNOR RESSORT DE REGUL. RESORTE, GOBERNADOR	0338-19-666	1		
19667	PLATE, RETAINER CALE PLATO SUPLEMENTARIO	0338-19-667	3		
19670	SHAFT ARBRE EJE	0338-19-670A	1		
19676	RING CERCLE ANILLO	0338-19-676	1		

1950A MANUAL LINKAGE (AUTOMATIC T/MISSION)

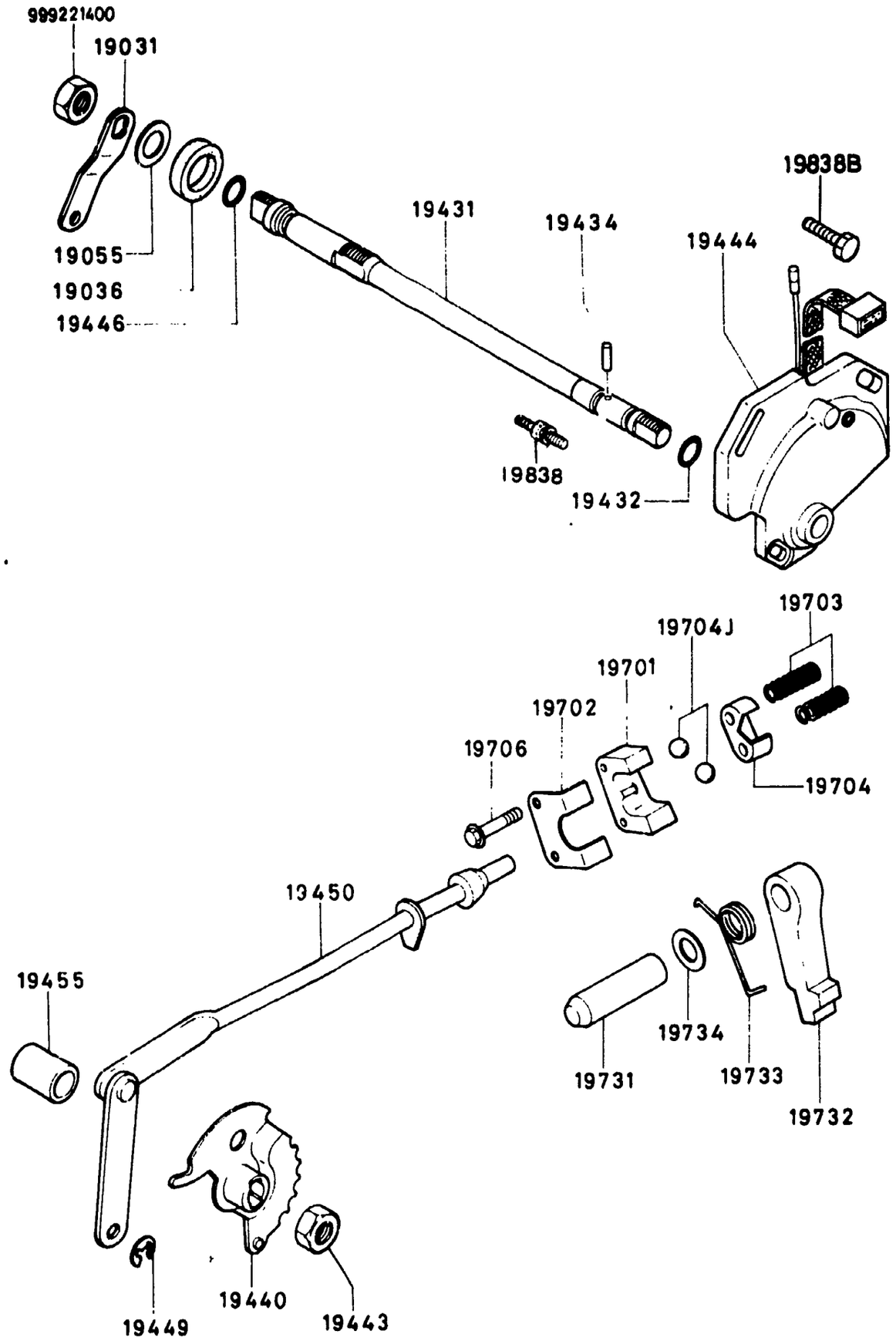

1950A-1 MANUAL LINKAGE (AUTOMATIC T/MISSION)

D-CODE (Key No.)	PART NAME	PART No.	Qty.	MODEL DESCRIPTION	VIN (Chassis No.)
19031	LEVER,SELECT LEVIER SELECTEUR PALANCA SELECTORA	8872-19-031	1		
19036	SEAL,DUST CACHE-POUSSIERE SELLO,POLVO	1758-19-036A	1		
19055	WASHER RONDELLE ARANDELA	1758-19-055	1		
19431	SHAFT,MANUAL ARBRE MANUEL EJE,MANUAL	1758-19-431A	1		
19432	RING,'O' JOINT 'O' SELLO DE GOMA 'O'	9954-10-0901	2		
19434	PIN CLAVETTE PASADOR	1758-19-434	1		
19440	PLATE,MANUAL PLAQUE DE COMMANDE T/MISS PLATO MANUAL	1758-19-440A	1		
19443	NUT,SHAFT ECROU D'AXE TUERCA,EJE	1758-19-443	1		
19444	SWITCH,INHIBITOR RELAIS	8872-19-444A	1		
19446	RING,'O' JOINT 'O' SELLO DE JMA 'O'	9954-10-1201	1		
19449	RING,SNAP CALE ANILLO,SEGURO	0338-19-449	1		
19450	ROD,PARKING TIGE,FREIN AMAIN VARILLA,PARQUEO	1758-19-450	1		
19455	SLEEVE MANCHON	1758-19-455A	1		
19701	SUPPORTER,ACTUATOR SUPPORT COMMANDE	0338-19-701A	1		
19702	PLATE,RETAINING ARRETOIR	0338-19-702A	1		

1950A MANUAL LINKAGE (AUTOMATIC T/MISSION)

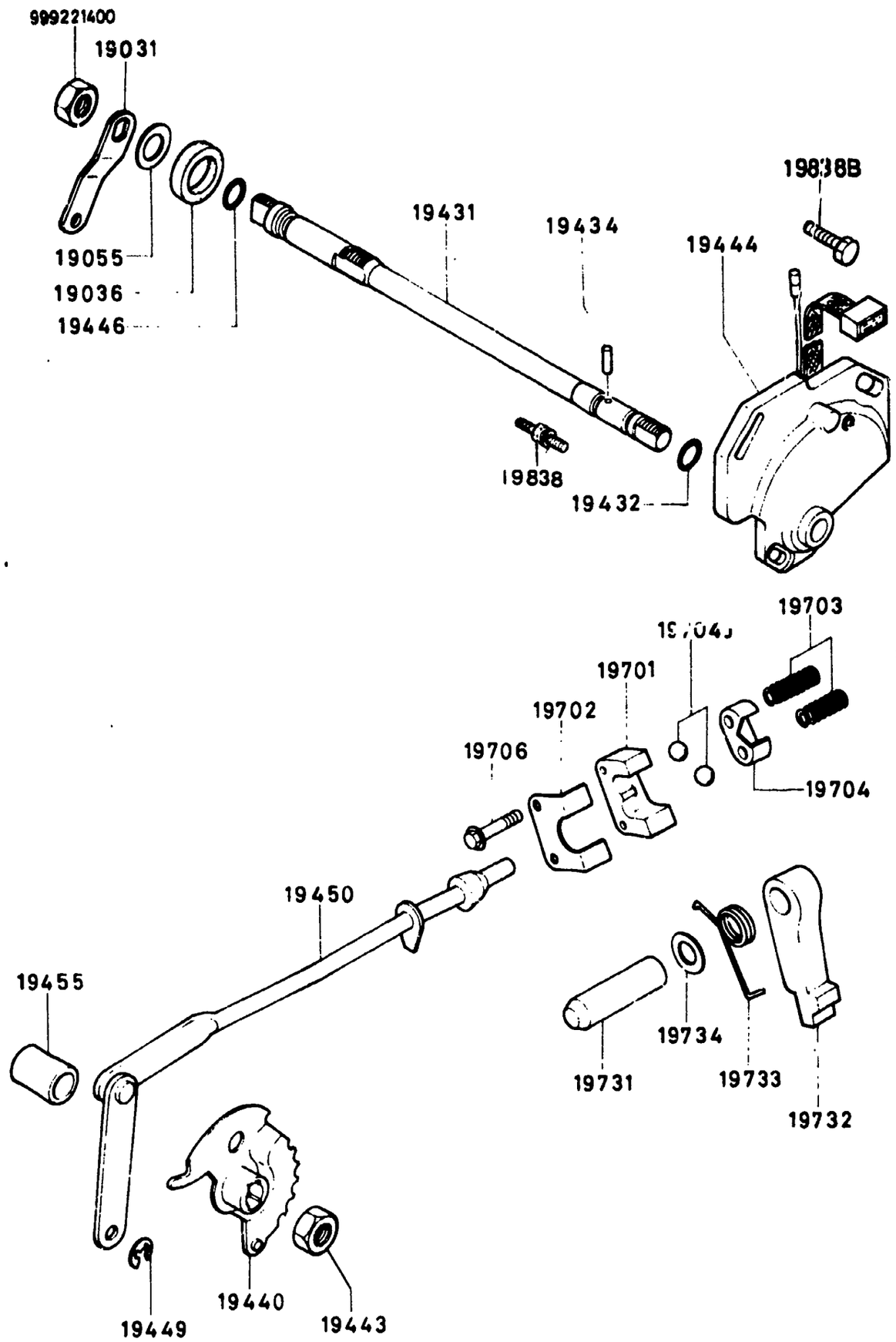

1950A-2★ MANUAL LINKAGE (AUTOMATIC T/MISSION)

D-CODE (Key No.)	PART NAME	PART No.	Qty.	MODEL DESCRIPTION	VIN (Chassis No.)
19702 CONT'D	PLACA DE RETENIDO	0338-19-702A			
19703	SPRING,BALL PARK RESSORT, BOITE AUTOM. RESORTE,BOLA ESTACIONARIA	0338-19-703	2		
19704	RETAINER ARRET RETENTOR	0338-19-704	1		
19704J	BALL,STEEL BILLE D'ACIER BILLE D'ACIER	9961-12-750	2		
19706	BOLT BOULON PERNO	0338-19-706	2		
19731	SHAFT,PARKING PAWL CALE, LINGUET PARKING EJE,TRINQUETE PARQUEO	0338-19-731	1		
19732	PAWL,PARKING CLIQUET, PARKING UNA APARCAMIENTO	0338-19-732	1		
19733	SPRING,PAWL RETURN RESSORT, LINGUET RAPPEL RESORTE,RETORNO DE TRINQU	0338-19-733C	1		
19734	SPACER,DOWEL RONDELLE ESPACIADOR,ESPIGA	0338-19-734A	1		
19838	BOLT BOULON PERNO	6872-19-838A	1		
19838B	BOLT BOULON PERNO	1758-19-838	2	80 MODEL	