This file is available for free download at http://www.iluvmyrx7.com

This file is fully text-searchable – select Edit and Find and type in what you're looking for. This file is intended more for online viewing than printing out so some graphics may not print 100% legibly, you can zoom in on them if you need to.



www.iluvmyrx7.com

CRUISE CONTROL SYSTEM
Article Text

Copyright © 1998 Mitchell Repair Information Company, LLC
Sunday, August 26, 2001 03:28PM

ARTICLE BEGINNING

1983 CRUISE CONTROL SYSTEMS
Mazda

RX7

DESCRIPTION

Main switch is used to turn system on and off. A control switch with "SET (ACCEL)" and "COAST (RESUME)" is used to set desired speed. System will not operate at speeds under 25 MPH. Main switch is located on the right side of dash. Control switch is on right side of steering column.

OPERATION

MAIN SWITCH

Pressing the main switch activates the cruise control.

CONTROL SWITCH

When "SET" switch is pressed and then released, desired speed is set. If switch is continuously pressed, the vehicle will accelerate until switch is released, at which time the new or higher speed will be set.

When "COAST" switch is moved down or rearward, speed will be reduced. When switch is released, the new or lower speed will be set. If cruise control is overridden by means other than the main switch, original speed can be resumed by operating switch forward or up.

TROUBLE SHOOTING

CRUISE CONTROL SYSTEM DOES NOT WORK

Blown fuse. Faulty main switch, control switch, speed sensor or actuator. Malfunction of stop, clutch or inhibitor switch. Bad ground or wiring.

SPEED SETTING CAN'T BE CANCELED

Faulty control unit. Malfunction of clutch, stop or inhibitor switch.

SET SPEED IS NOT HELD

Faulty actuator, control unit or speed sensor. Actuator control cable malfunction.

SYSTEM DOESN'T ENGAGE IMMEDIATELY

CRUISE CONTROL SYSTEM
Article Text (p. 2)

Copyright © 1998 Mitchell Repair Information Company, LLC
Sunday, August 26, 2001 03:28PM

Faulty actuator, control switch or unit. Actuator control cable malfunction.

TESTING

1) Support vehicle with drive wheels off of ground. Turn ignition switch ON. With control unit connected, connect negative probe of voltmeter to terminal M of control unit connector. Refer to CRUISE CONTROL UNIT CONNECTOR DIAGRAM. Test terminals D through N. See CRUISE CONTROL UNIT TESTING table. If values do not match those specified, check appropriate circuits. If values do match those specified, go to next step.

2) Start engine and switch cruise control main switch ON. Increase speed until 30 MPH is indicated and push cruise control SET button. Connect negative probe of voltmeter to terminal M of control unit connector. Test terminals A through C. See CRUISE CONTROL UNIT TESTING table. If values do not match those specified, check appropriate circuits.

Cruise Control Unit Connector Diagram

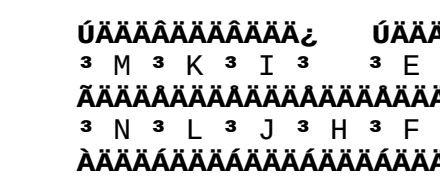

CRUISE CONTROL UNIT TESTING TABLE

Terminal	Action	Voltage
F	At all times	12 volts
I	Push SET button	0 volts
	Release SET button	8 volts
J	Push COAST button	0 volts
	Release COAST button	8 volts
K	Push RESUME button	0 volts
	Release RESUME button	8 volts
E	Push brake or clutch pedal	12 volts
N	Push brake pedal	12 volts
D	Shift to P or N (1)	0 volts

Copyright © 1998 Mitchell Repair Information Company, LLC
Sunday, August 26, 2001 03:28PM

		Shift to D or R (1)	12 volts
B		Push SET button	0 volts
		Release SET button	12 volts
A		Push COAST button	0 volts
		Release COAST button	12 volts
C		Push clutch pedal	0 volts
		Release clutch pedal	12 volts
H	* Engine OFF		0-9 volts
	* Remove speedometer cable from transmission.		
	* Ignition ON		
	* Rotate cable by hand		

(1) - Automatic transmission only.

WIRING DIAGRAM

See WIRING DIAGRAMS article for cruise control circuit diagram.

END OF ARTICLE

INSTRUMENT PANEL - STANDARD
Article Text

Copyright © 1998 Mitchell Repair Information Company, LLC
Sunday, August 26, 2001 03:29PM

ARTICLE BEGINNING

Switches & Instrument Panels
MAZDA

DESCRIPTION & OPERATION

All models have a steering column mounted combination switch to control turn signals, headlights and wipers. The instrument cluster contains a speedometer, fuel gauge and water temperature gauge.

Some models also have a tachometer, voltmeter and oil pressure gauge. The fuel and temperature gauges operate on 7 volts, supplied by a cluster-mounted voltage regulator. The sending units are variable-resistance type and have the same resistance values on all models.

TESTING

GAUGES

1) Turn ignition on. If gauge needles do not move at all, check for blown fuse or broken power wire. If both gauges are inoperative, voltage regulator may be the cause. If only one gauge does not work, the gauge, sending unit, or connecting wiring may be at fault.

2) To test temperature gauge, disconnect sending unit wire. Connect a resistor between wire and ground, then check gauge reading. Change resistance and recheck. If gauge readings are as shown in tables, replace sending unit. If not, repair wiring or replace gauge.

3) To test fuel gauge, disconnect wire to sending unit at fuel tank (all except GLC Wagon) or unplug connector behind left kick panel (GLC Wagon). Connect resistor between Yellow wire and ground. Check gauge reading.

NOTE: Allow 2 minutes for gauge reading to stabilize. It should be within 1 pointer width of line on gauge face. See Fig. 1.

4) If gauge readings are incorrect, replace gauge. If readings are okay, test in-tank sending unit before replacing it. Resistance should measure 0-5 ohms with float raised, and 103-117 ohms with float lowered. If not, replace sending unit.

RESISTANCES FOR FUEL GAUGE TESTING

Needle Position	Test Resistor
Full Line	(1) 7 ohms
Half Tank	33 ohms
Empty Line	(2) 95 ohms

Copyright © 1998 Mitchell Repair Information Company, LLC
Sunday, August 26, 2001 03:29PM

(1) - On Pickup, 3 ohms.
(2) - On Pickup, 110 ohms.

RESISTANCES FOR TEMPERATURE GAUGE TESTING

Model	Cold Line	Hot Line
GLC Wagon & 626	233 ohms	16 ohms
RX7	104 ohms	21 ohms
GLC	154 ohms	12 ohms

REMOVAL & INSTALLATION

INSTRUMENT CLUSTER

Removal (GLC Hatchback)
Disconnect battery ground. Remove steering wheel. Remove meter hood by moving it up and down with hands. Disconnect speedometer cable and remove 4 cluster screws. Pull cluster back and unplug wiring.

Installation
To install, reverse removal procedure.

Removal (GLC Wagon)
1) Disconnect battery ground. Place a strip of masking tape along edge of instrument panel under cluster to protect finish. Remove 2 screws and meter hood.
2) Remove 1 screw at left end of center panel, then unsnap panel. Remove 3 screws under edge of dashboard cover and remove cover. Remove 3 cluster screws, disconnect speedometer cable and wires and remove cluster.

Installation
To install, reverse removal procedure.

Removal (Pickups & 626)
Disconnect battery ground. Remove steering wheel and column cover. Disconnect speedometer cable. Remove cluster hood and mounting bolts. Pull cluster back, unplug wiring and remove cluster.

Installation
To install, reverse removal procedure.

Removal (RX7)
Disconnect battery ground. Remove steering wheel. Remove 2 screws and cluster cover. Remove cluster attaching screws. Disconnect speedometer cable and pull cluster back. Unplug wiring and remove cluster.

Installation

Copyright © 1998 Mitchell Repair Information Company, LLC
Sunday, August 26, 2001 03:29PM

To install, reverse removal procedure.

COMBINATION SWITCH

Removal

Disconnect battery ground. Remove steering wheel. Remove column covers and snap ring at top of column (if equipped). Unplug wiring connectors. Loosen combination switch screw. Remove switch.

Installation

To install, reverse removal procedure.

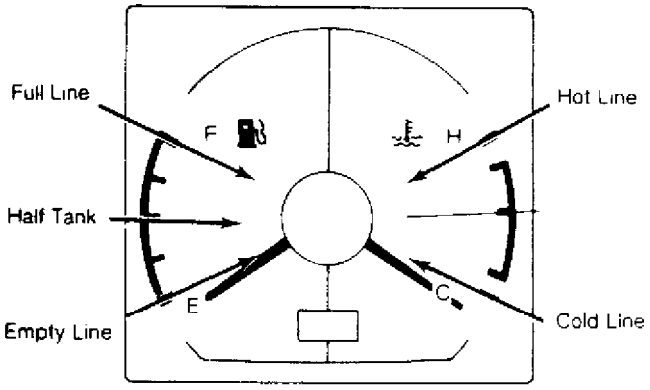

29767

Fig. 1: Gauge Testing Needle Locations.
Needle should indicate proper reading when test resistor is connected.

END OF ARTICLE

WIPER/WASHER SYSTEM
Article Text

Copyright © 1998 Mitchell Repair Information Company, LLC
Sunday, August 26, 2001 03:29PM

ARTICLE BEGINNING

1983 Wiper/Washer Systems
MAZDA

DESCRIPTION

All models have a 2-speed wiper motor with intermittent wipe feature. GLC and RX7 models may be equipped with a rear window wiper/washer system. The wiper switch for GLC Wagon is a lever on the left side of the steering column.

On all other models wiper lever is on the right side of column. A time delay relay is used to control the intermittent cycle on all except RX7 models. On RX7, wipers are timed by the "Control Processing Unit" that also operates a number of other accessories.

OPERATION

GLC WAGON

The wiper speeds are controlled by twisting the lever to the left of the steering column. The washer is operated by pressing in on the end of the lever. The rear wiper on GLC Wagon is turned on by pulling out the dash-mounted switch, while the washer operates when the switch is turned.

ALL OTHER MODELS

The wipers are controlled by a lever on the right side of the steering column. As the lever is moved down, it switches the wipers to intermittent, low speed and high speed. If the lever is pulled toward the steering wheel, the washer sprays.

If the lever is pushed away from the steering wheel, the wipers sweep until it is released. The rear wiper/washer on GLC Hatchback is controlled by a rocker switch on the instrument panel. The RX7 rear wiper switch is on the console.

TESTING

WIPER MOTOR

1) Remove wiper motor from vehicle. Connect jumper wires to connector at motor to check both speeds. For low speed, connect battery voltage to Blue wire terminal and ground the Blue/White terminal. For high speed, ground the Blue/Red terminal instead.

2) To check the park switch, apply battery voltage to the Blue wire terminal. Connect a jumper wire between Blue/White and Blue/Black. Ground the Black wire. Motor should run briefly and stop.

MAZDA INTERMITTENT WIPER RELAY LOCATIONS
**ÄÄÄ

Copyright © 1998 Mitchell Repair Information Company, LLC
Sunday, August 26, 2001 03:29PM

Model	Connector	Location
GLC		
Hatchback	6-pin	Left of instrument cluster
Wagon	6-pin	Left of instrument cluster
B2000 &		
B2200	4-pin	Left of instrument cluster
RX7 (1)	17-pin	Left kick panel
626	6-pin (2)	Left of instrument cluster

(1) - Time delay is controlled by "Control Processing Unit".
(2) - For 4-door models. On 2-door and 5-door models, relay has 9-pins.

3) To check rear wiper motor, apply battery voltage to Blue/Red wire and ground the Blue/White wire. Motor should run steadily.

REMOVAL & INSTALLATION

FRONT WIPER MOTOR ASSEMBLY

Removal

1) Run wipers until they are in vertical position, then turn ignition off or disconnect battery cable. Remove wiper arms and shaft nuts.

2) Remove cowl grille or access panel. Unplug at motor. Remove mounting bolts and wiper motor.

Installation

To install, reverse removal procedure.

REAR WIPER MOTOR ASSEMBLY

Removal

Disconnect battery ground. Remove wiper arm and shaft nuts. Remove trim on rear hatch. Remove fasteners and remove wiper hole cover. Disconnect wiring, remove attaching bolts and remove rear wiper motor.

Installation

To install, reverse removal procedure.

WIPER SWITCH

Removal

Disconnect battery ground. Remove steering wheel. Remove column covers and snap ring at top of column (if equipped). Unplug wiring connectors. Loosen combination switch screw. Remove combination switch.

Copyright © 1998 Mitchell Repair Information Company, LLC
Sunday, August 26, 2001 03:29PM

Installation
To install, reverse removal procedure.

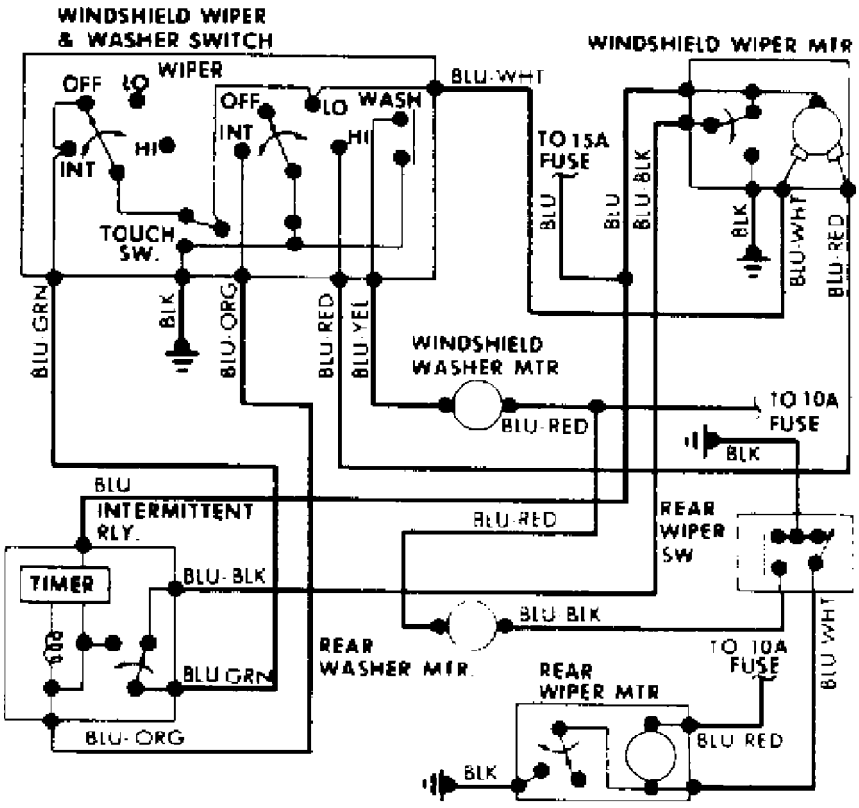

29801

Fig. 1: Mazda GLC Hatchback Wiring Diagram

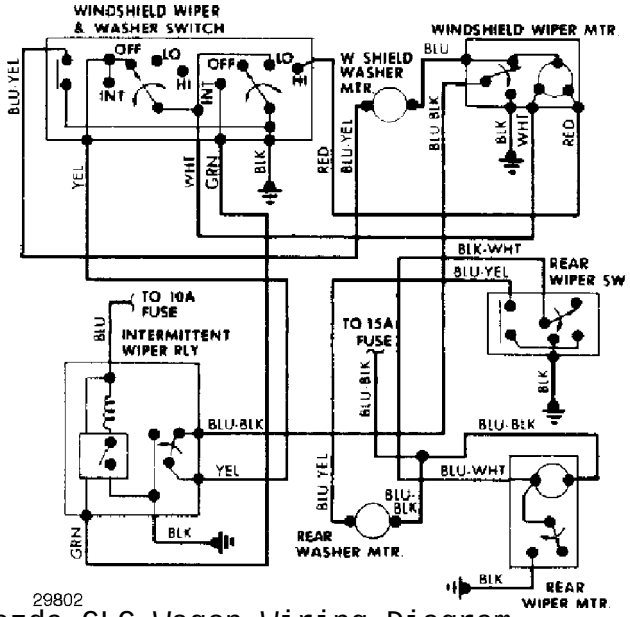

29802

Fig. 2: Mazda GLC Wagon Wiring Diagram

WIPER/WASHER SYSTEM
Article Text (p. 4)

Copyright © 1998 Mitchell Repair Information Company, LLC
Sunday, August 26, 2001 03:29PM

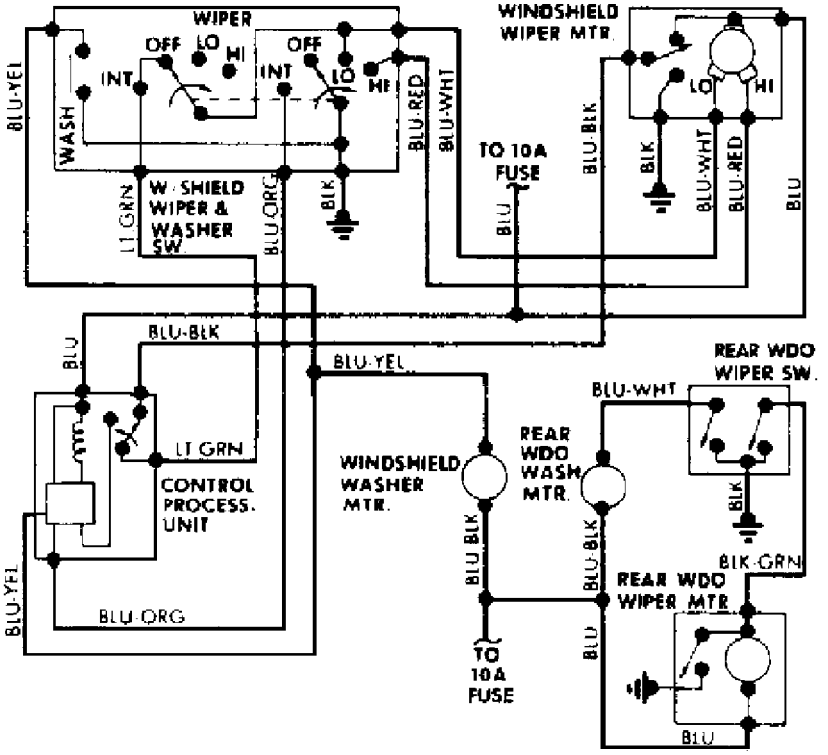

29803

Fig. 3: Mazda RX7 Wiring Diagram

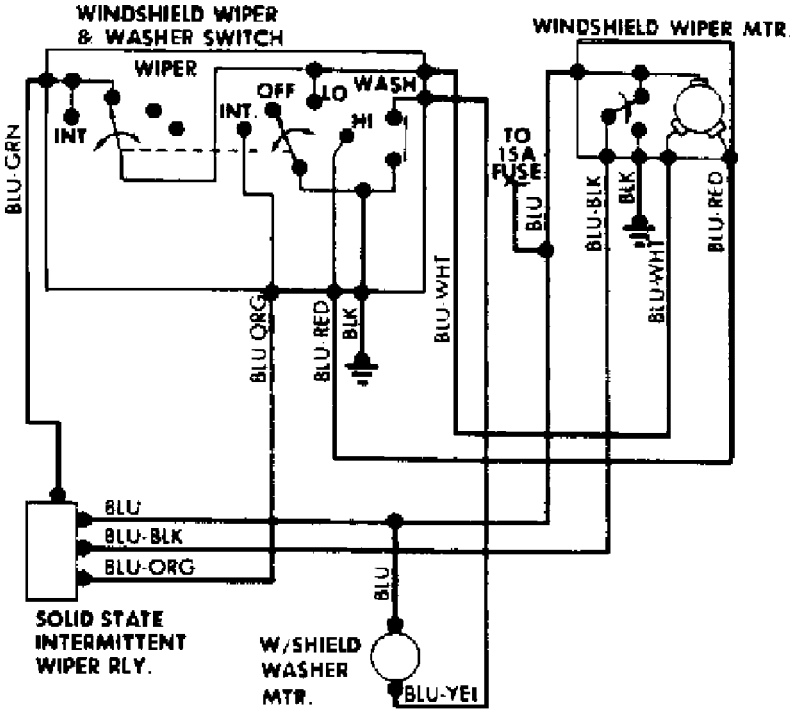

29804

Fig. 4: Mazda B2000 and B2200 Wiring Diagram

Copyright © 1998 Mitchell Repair Information Company, LLC
Sunday, August 26, 2001 03:29PM

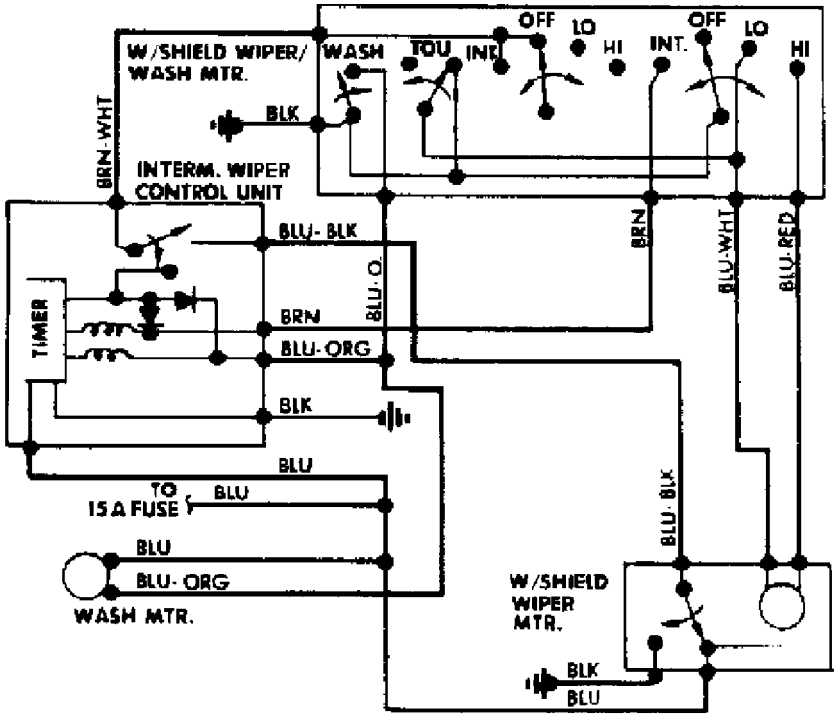

29805

Fig. 5: Mazda 626 Front Wiper Wiring Diagram (4-Door Models)

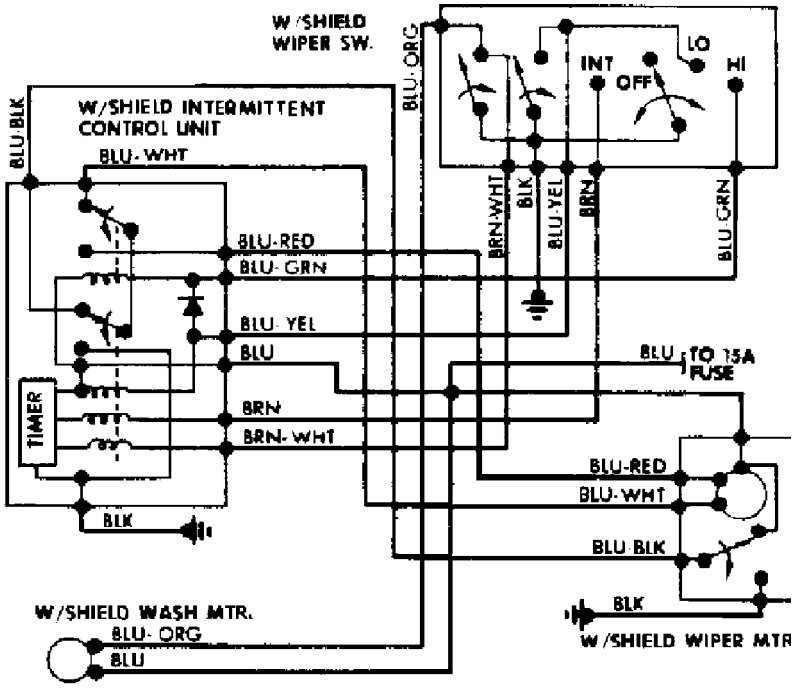

29806

Fig. 6: Mazda 626 Front Wiper Wiring Diagram (2 & 5-Door Models)

Copyright © 1998 Mitchell Repair Information Company, LLC
Sunday, August 26, 2001 03:29PM

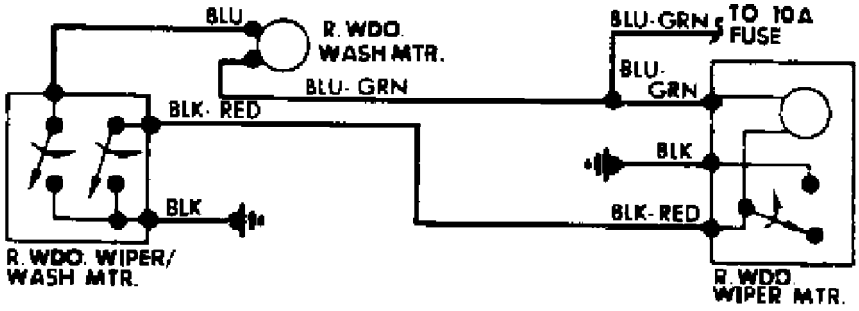

Fig. 7: Mazda 626 Rear Wiper Wiring Diagram (4-Door Models Only)

END OF ARTICLE

ELECTRICAL COMPONENT LOCATOR
Article Text

Copyright © 1998 Mitchell Repair Information Company, LLC
Sunday, August 26, 2001 03:29PM

ARTICLE BEGINNING

1983 Mazda
RX7 ELECTRICAL COMPONENTS

RX7 COMPONENT LOCATOR CHART

MISCELLANEOUS COMPONENTS

Component	Component Location
A/C-Heater Blower Motor Resistor	On blower housing under right side of dash.

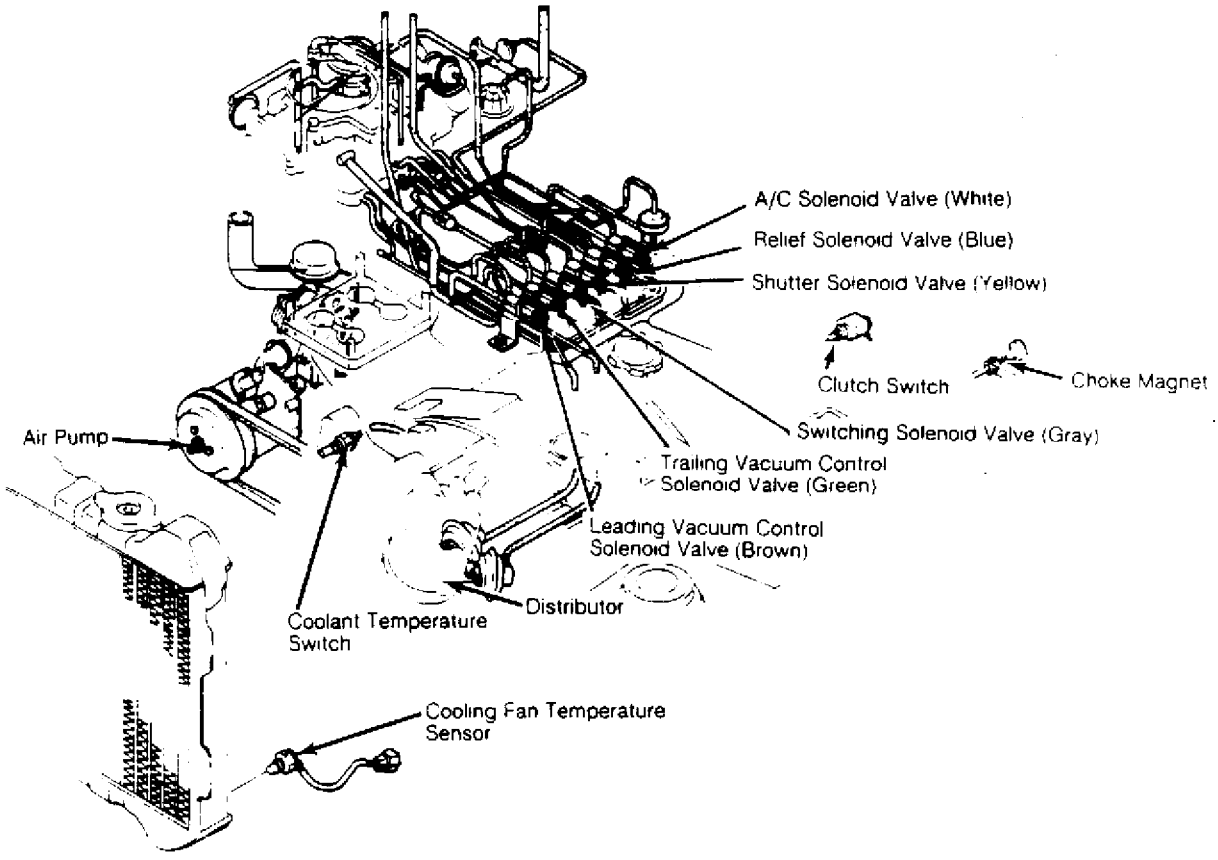

Choke Magnet	In choke switch under dash.

ELECTRICAL COMPONENT LOCATOR
Article Text (p. 2)

Copyright © 1998 Mitchell Repair Information Company, LLC
Sunday, August 26, 2001 03:29PM

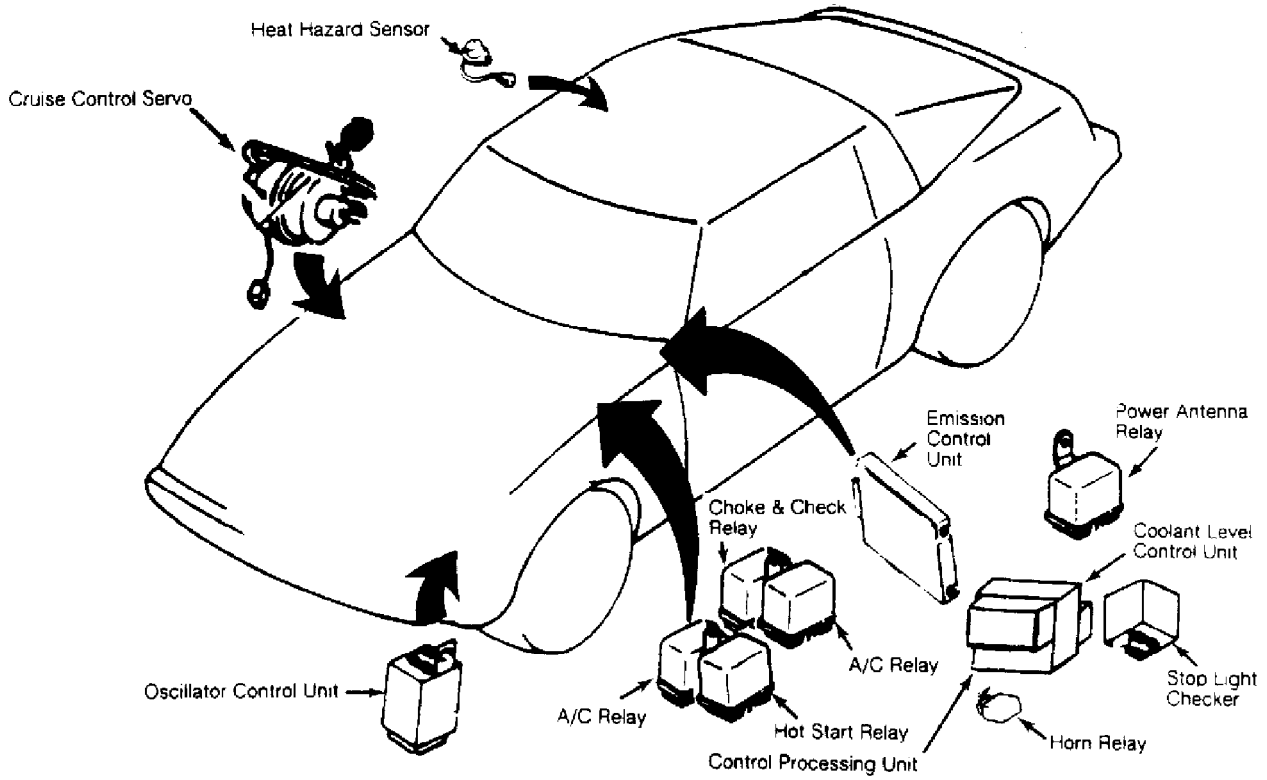

Cruise Control Servo	On right inner fender panel.
Fuse Block	Below left side of dash.
Fusible Links	On left shock tower.
Seat Belt Warning Chime	Behind right side of instrument cluster.

CONTROL UNITS

Component	Component Location

ELECTRICAL COMPONENT LOCATOR
Article Text (p. 3)

Copyright © 1998 Mitchell Repair Information Company, LLC
Sunday, August 26, 2001 03:29PM

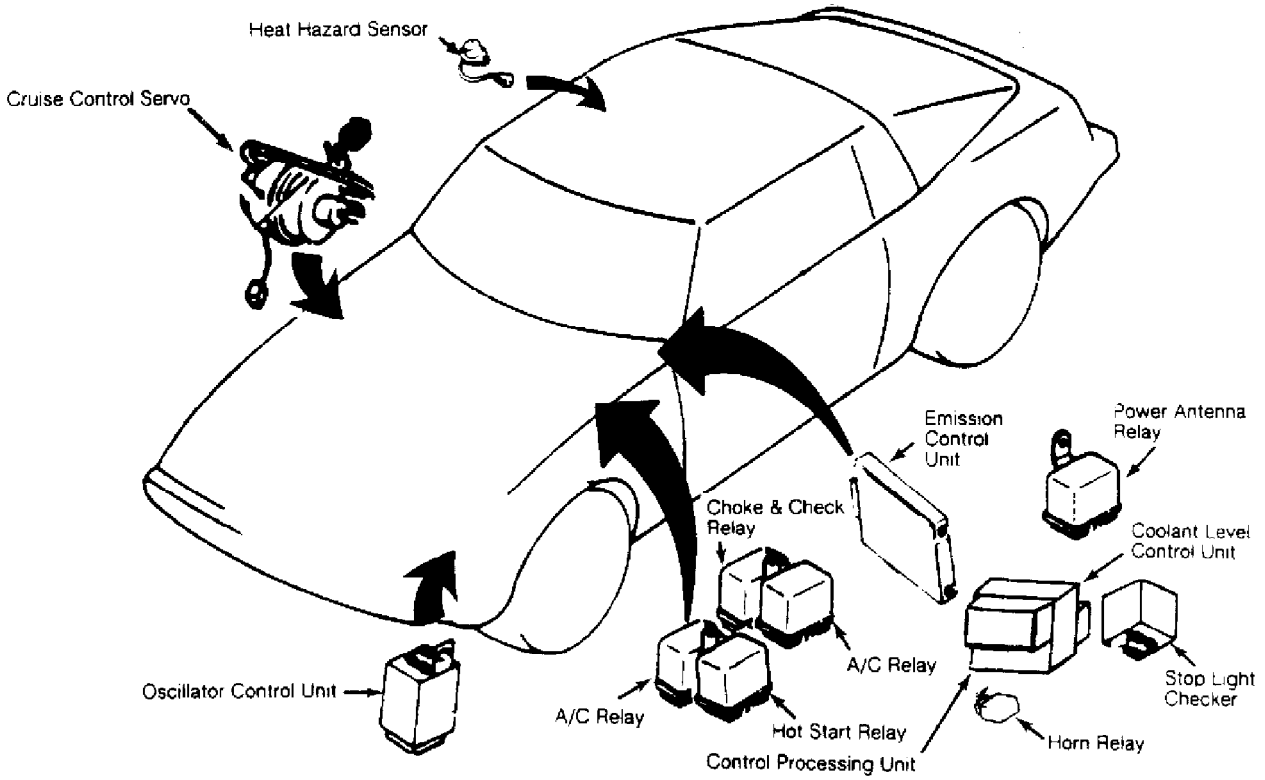

Coolant Level Control Unit	On left kick panel.

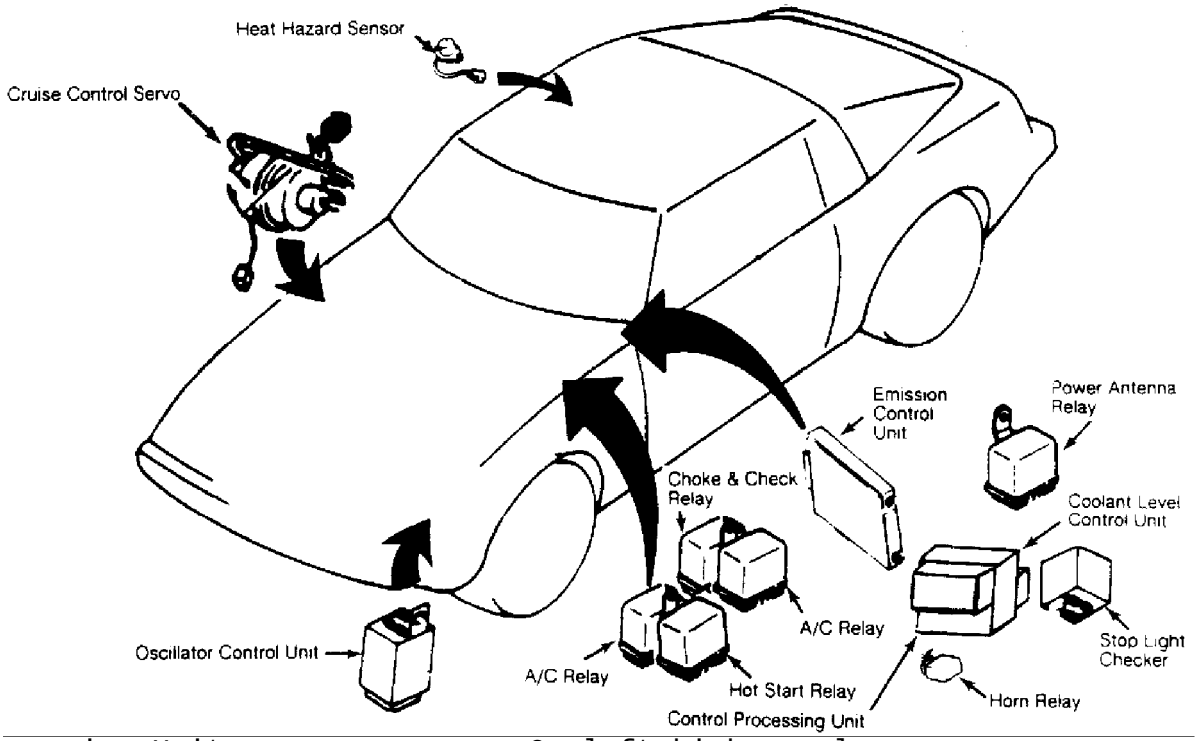

Control Processing Unit	On left kick panel.
Cruise Control Unit	At left side of luggage

ELECTRICAL COMPONENT LOCATOR
Article Text (p. 4)

Copyright © 1998 Mitchell Repair Information Company, LLC
Sunday, August 26, 2001 03:29PM

compartment.

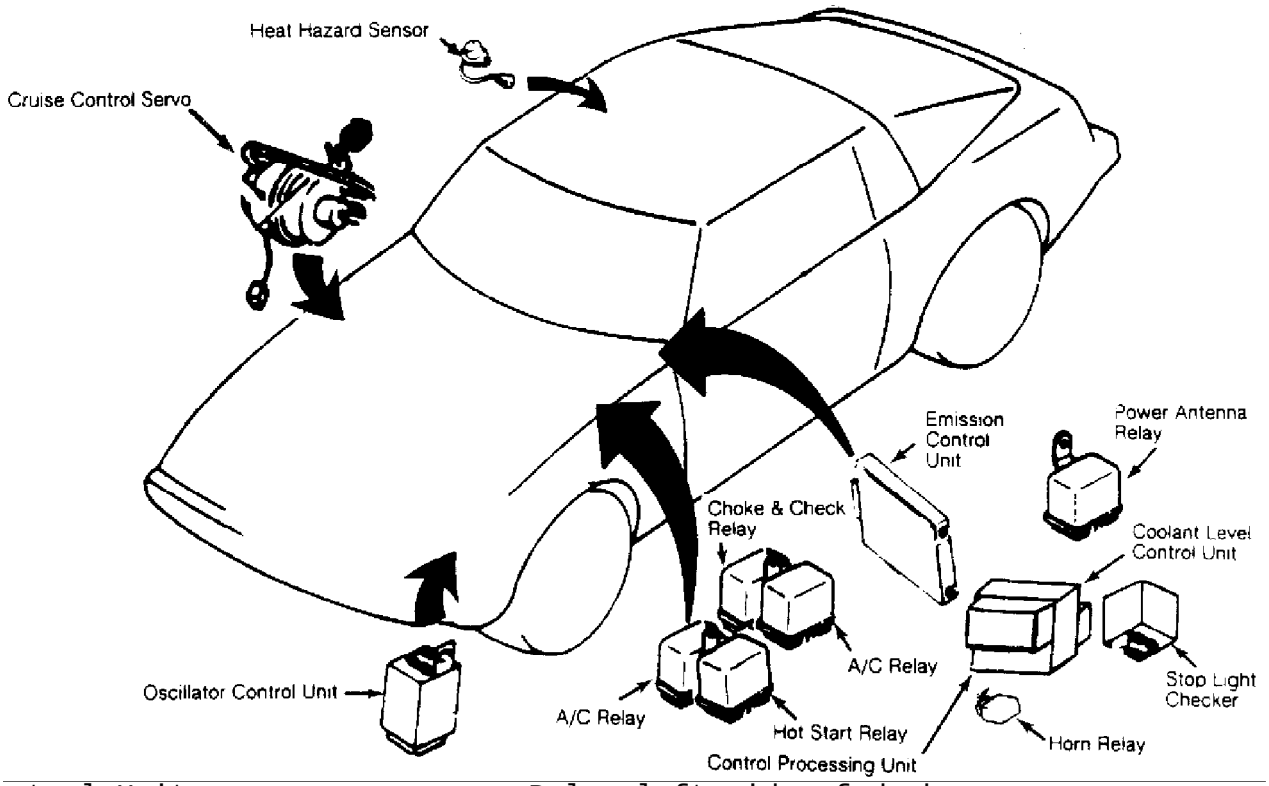

Emission Control Unit	Below left side of dash.

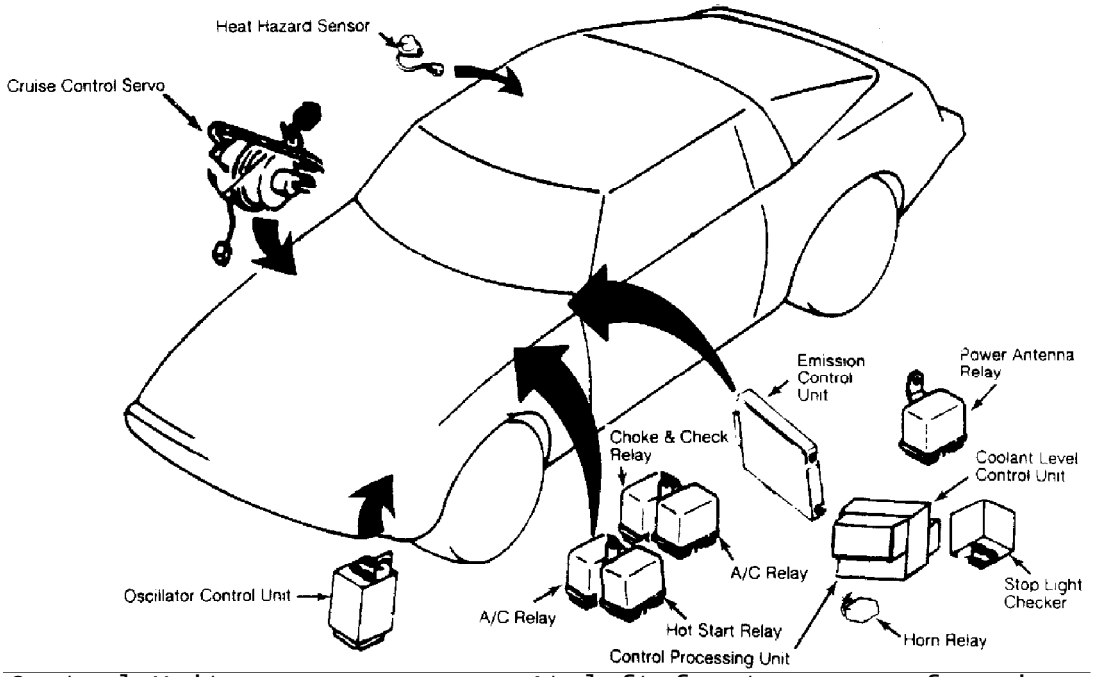

Oscillator Control Unit	At left front corner of engine compartment.

ELECTRICAL COMPONENT LOCATOR
Article Text (p. 5)

Copyright © 1998 Mitchell Repair Information Company, LLC
Sunday, August 26, 2001 03:29PM

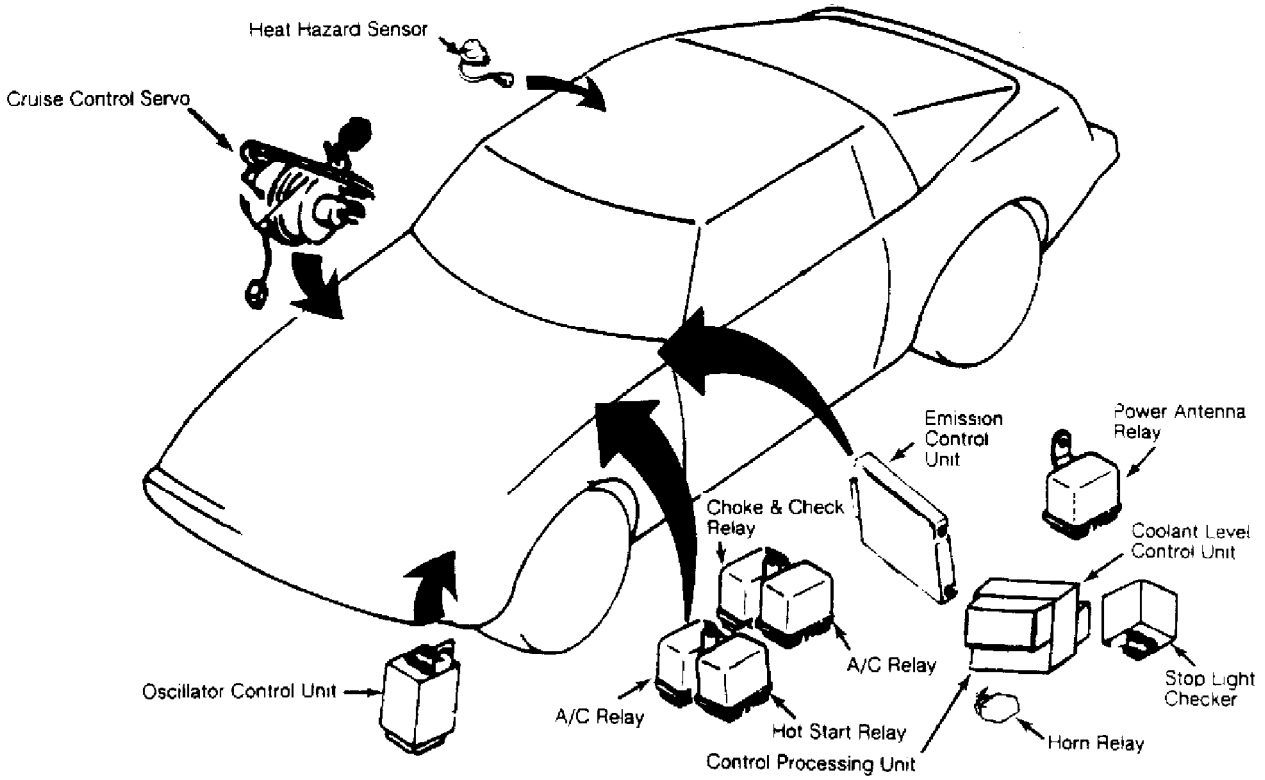

Stop Light Checker	On left kick panel.

RELAYS

Component	Component Location

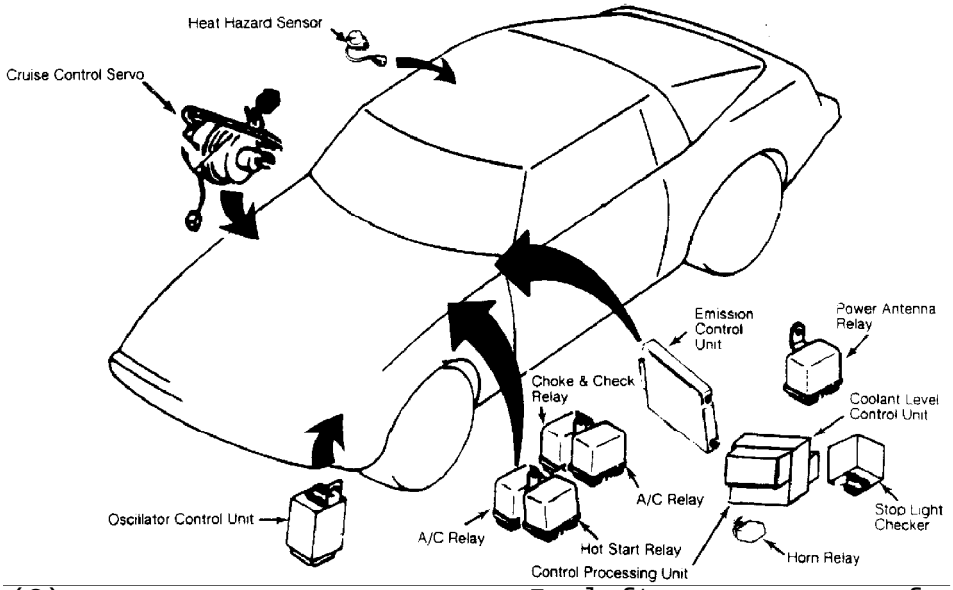

A/C Relays (2)	In left rear corner of engine compartment.

ELECTRICAL COMPONENT LOCATOR
Article Text (p. 6)

Copyright © 1998 Mitchell Repair Information Company, LLC
Sunday, August 26, 2001 03:29PM

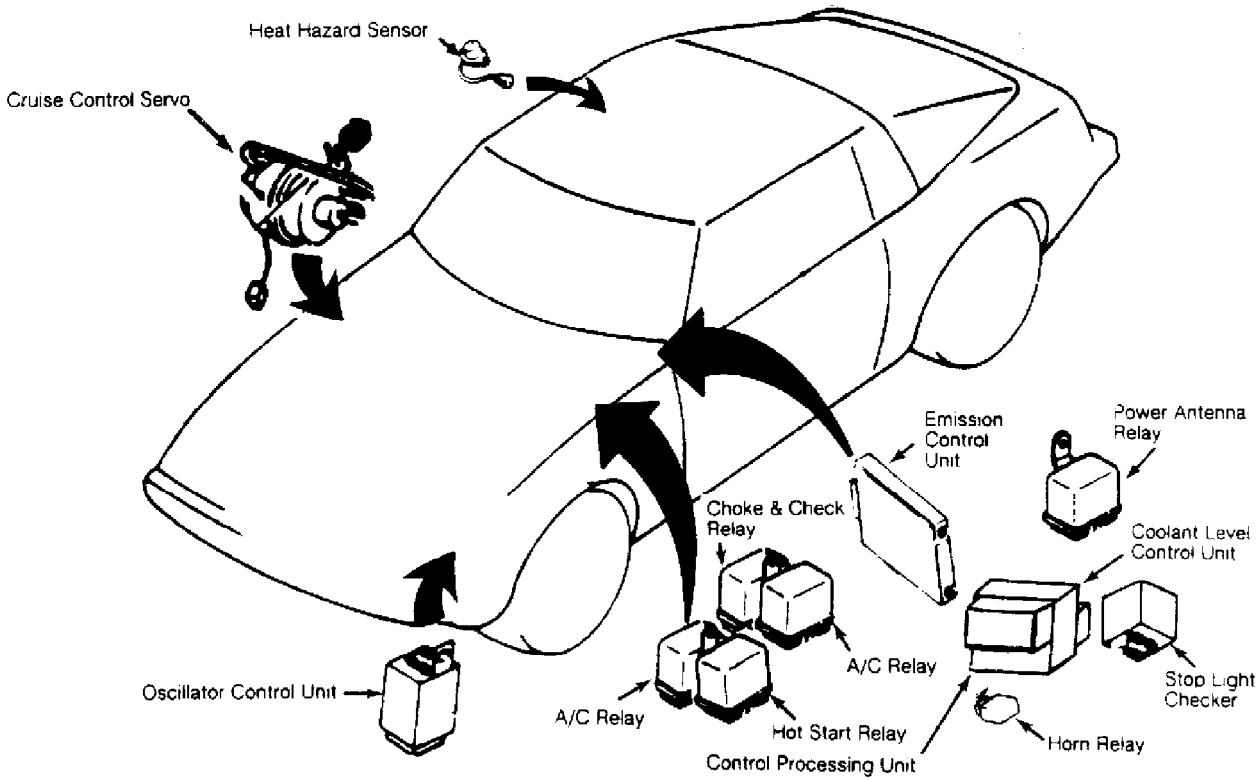

Choke & Check Relay	In left rear corner of engine compartment.

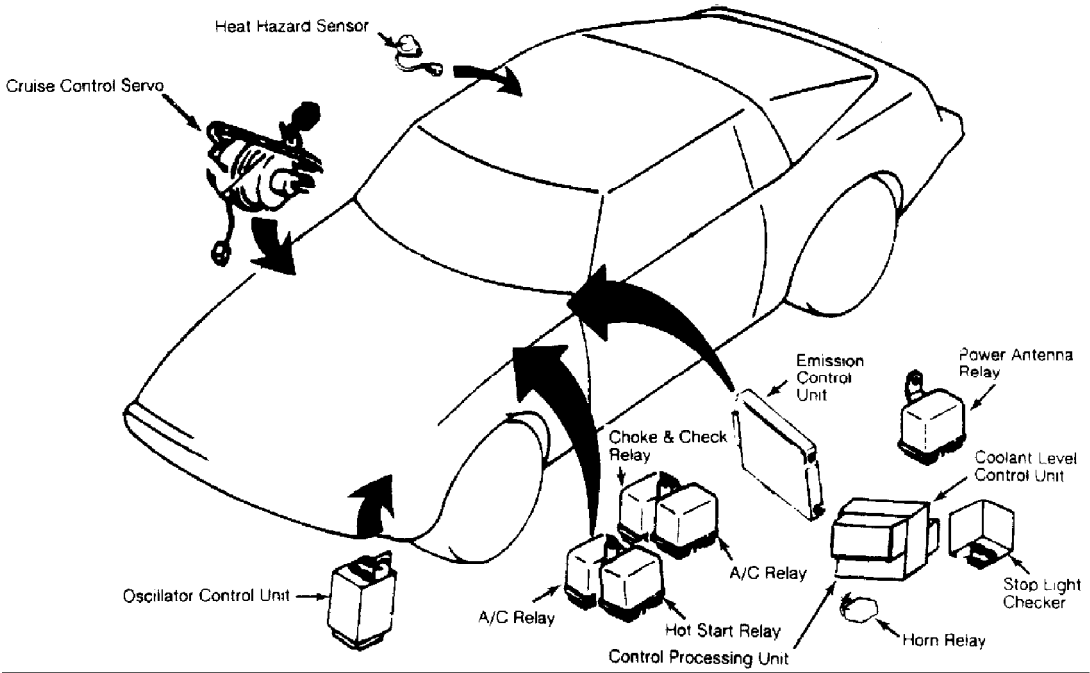

Horn Relay	At left kick panel.

ELECTRICAL COMPONENT LOCATOR
Article Text (p. 7)

Copyright © 1998 Mitchell Repair Information Company, LLC
Sunday, August 26, 2001 03:29PM

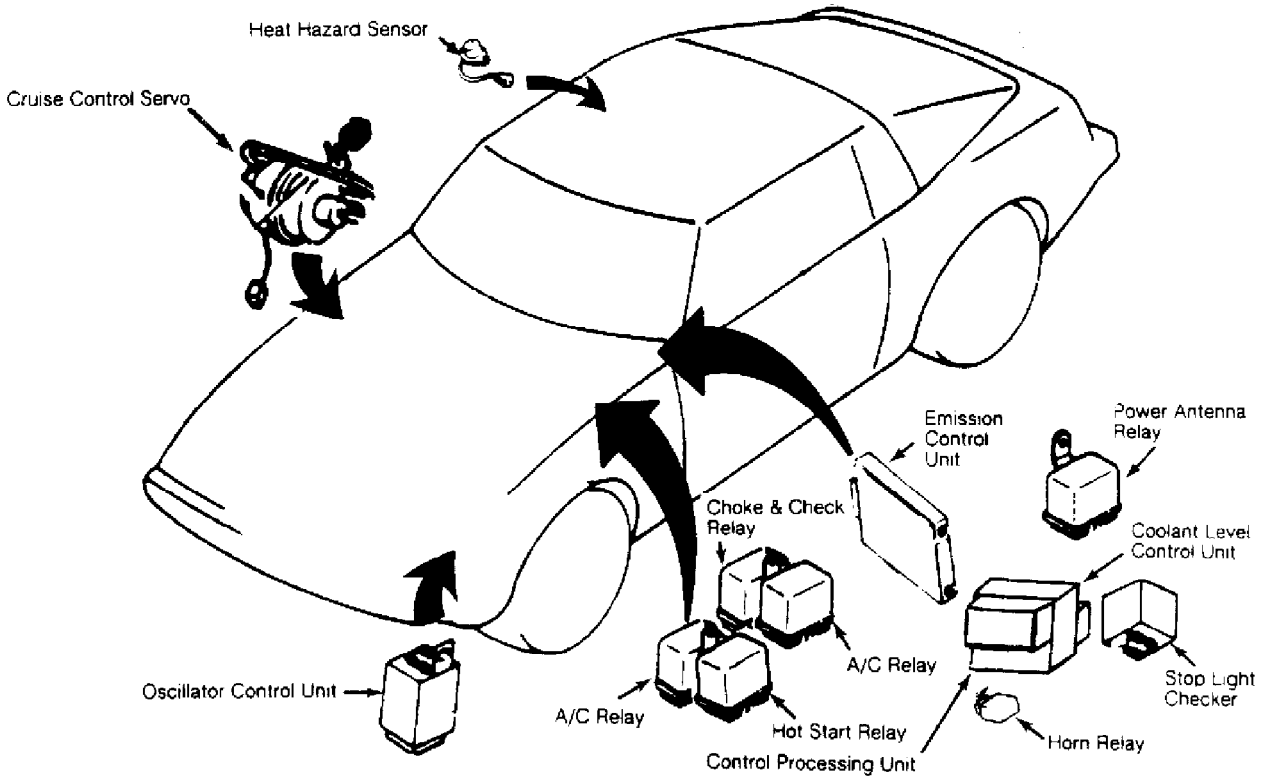

Hot Start Relay	In left rear corner of engine compartment.

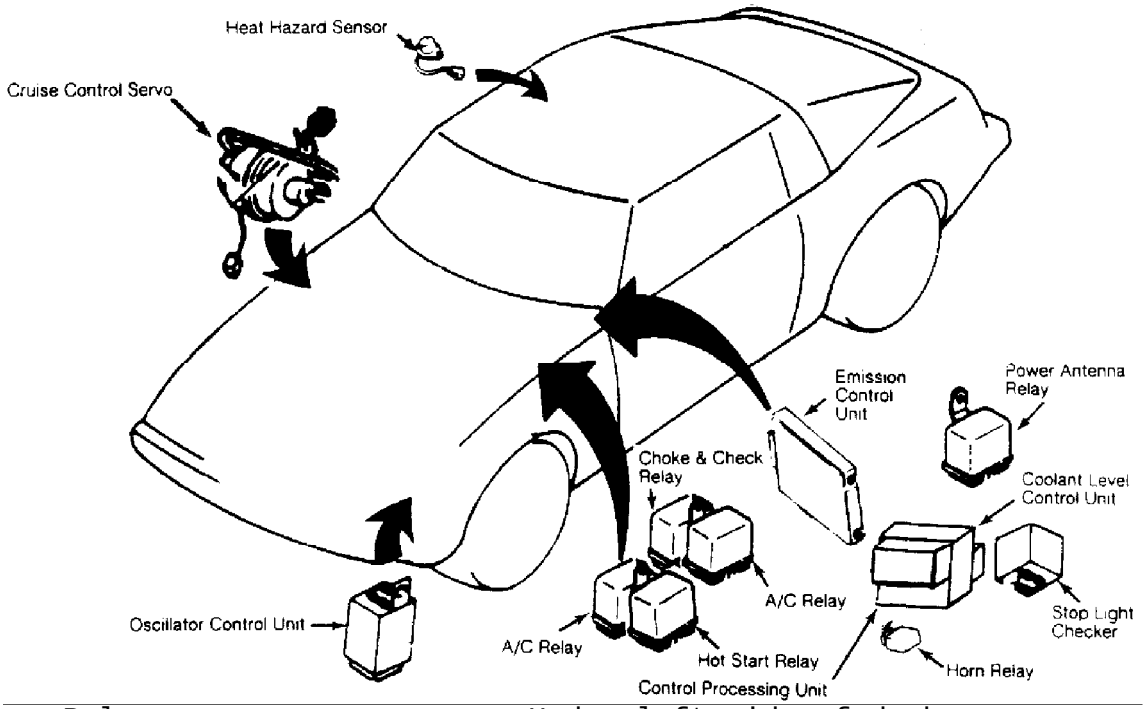

Power Antenna Relay	Under left side of dash.

MOTORS

ELECTRICAL COMPONENT LOCATOR
Article Text (p. 8)

Copyright © 1998 Mitchell Repair Information Company, LLC
Sunday, August 26, 2001 03:29PM

Component	Component Location
A/C-Heater Blower Motor	Under dash in heater box.
Front Washer Motor	On reservoir in center right side of engine compartment.
Front Wiper Motor	Under left side of cowl.
Fuel Pump	Near fuel tank on frame member.
Headlight Washer Motor	In right front corner of engine compartment.
Hot Start Assist Motor	In left rear corner of engine compartment.

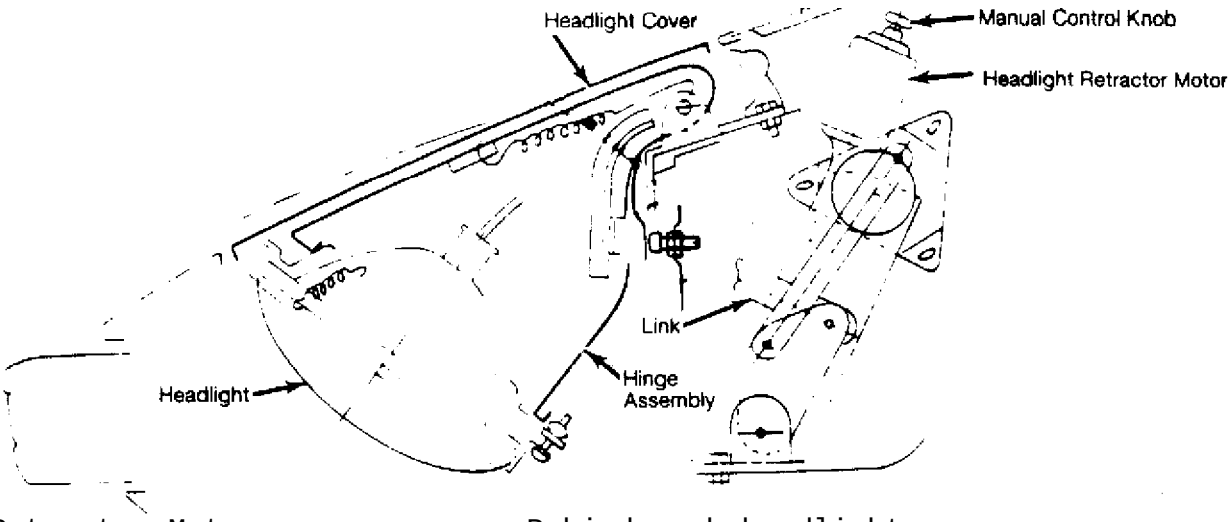

Headlight Retractor Motors	Behind each headlight assembly.
Power Antenna Motor	In right rear corner of luggage compartment.
Power Window Motors	One in each door.
Rear Washer Motor	In left rear quarter panel.
Rear Wiper Motor	On bottom right side of rear hatch.

SENDING UNITS/SENSORS

ELECTRICAL COMPONENT LOCATOR
Article Text (p. 9)

Copyright © 1998 Mitchell Repair Information Company, LLC
Sunday, August 26, 2001 03:29PM

Component	Component Location
Brake Fluid Level Sensor	In brake master cylinder.
Coolant Level Sensor	On top of radiator.

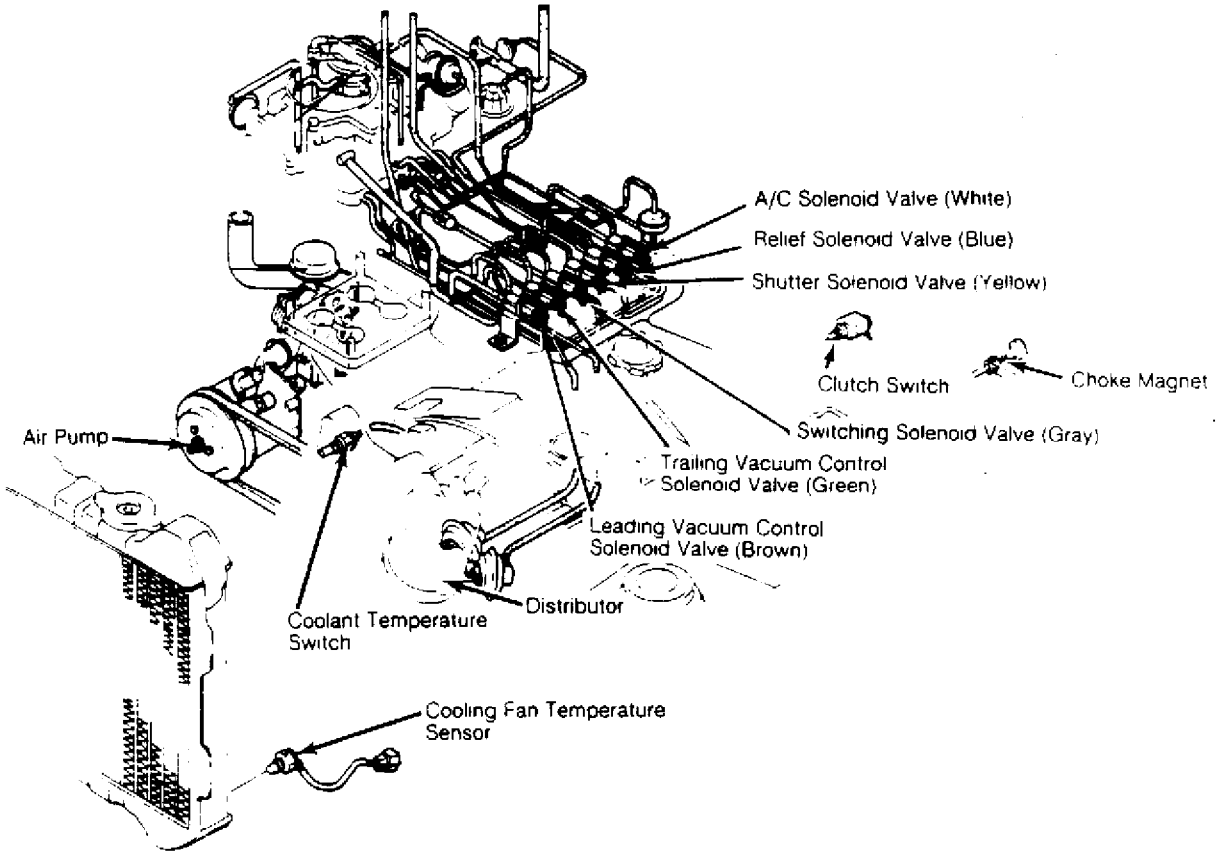

Cooling Fan Temperature Sensor	In lower left side of radiator.
Cruise Control Sensor	On back of speedometer
Fuel Gauge Sending Unit	On left side of fuel tank.

ELECTRICAL COMPONENT LOCATOR
Article Text (p. 10)

Copyright © 1998 Mitchell Repair Information Company, LLC
Sunday, August 26, 2001 03:30PM

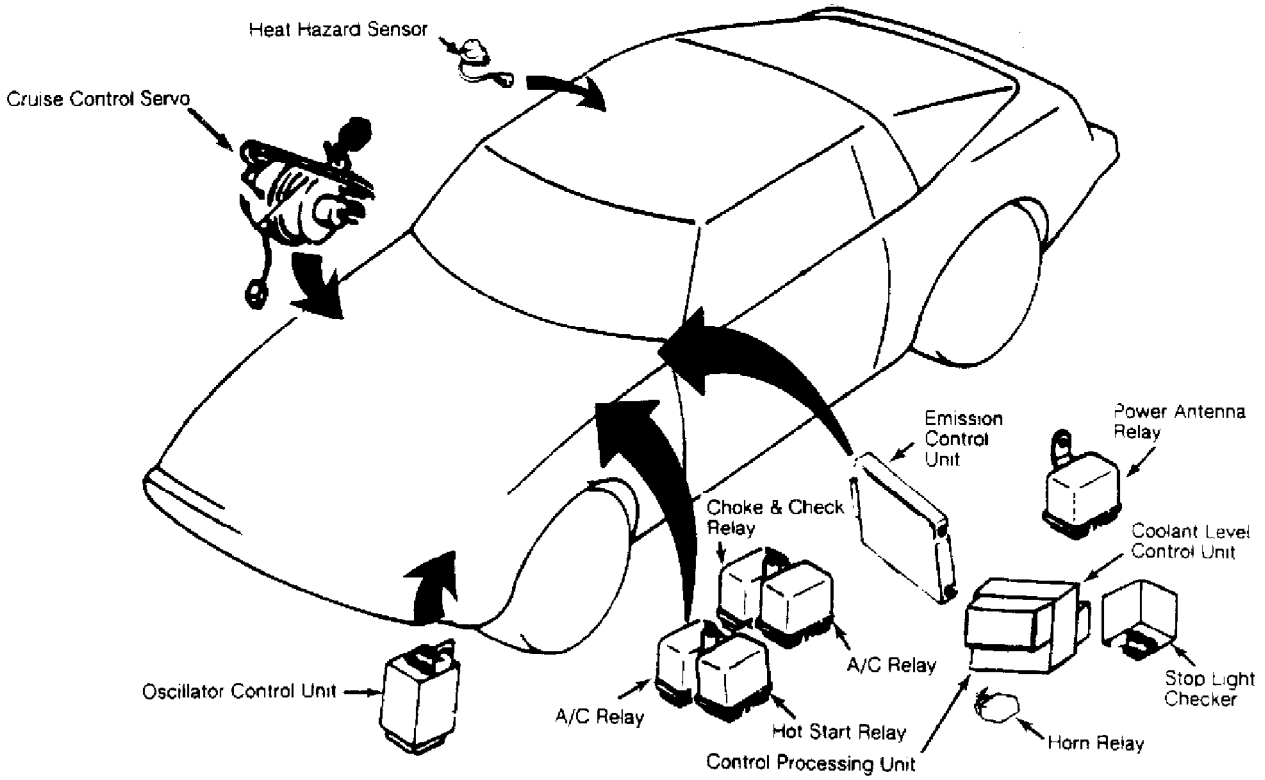

Heat Hazard Sensor	Under right side floor mat.

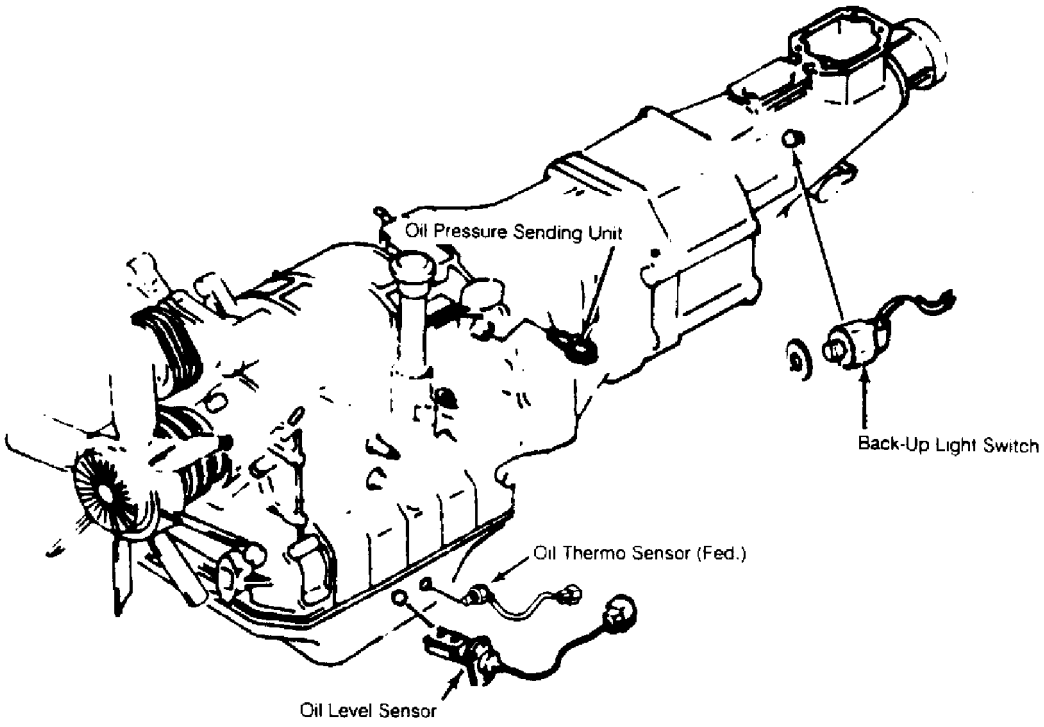

Oil Level Sensor, (Graphic 1)	In left side of oil pan.

ELECTRICAL COMPONENT LOCATOR
Article Text (p. 11)

Copyright © 1998 Mitchell Repair Information Company, LLC
Sunday, August 26, 2001 03:30PM

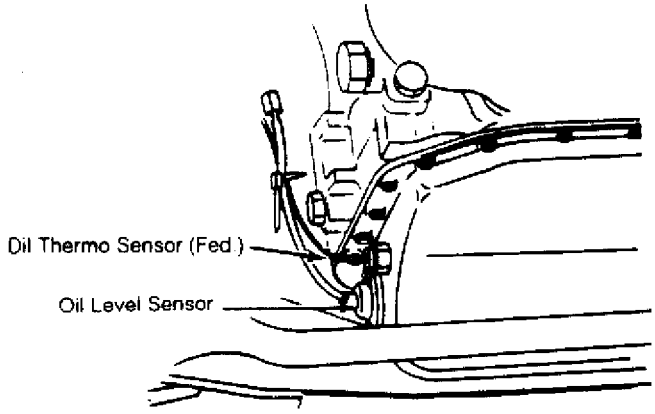

Oil Level Sensor, (Graphic 2)	In left side of oil pan.

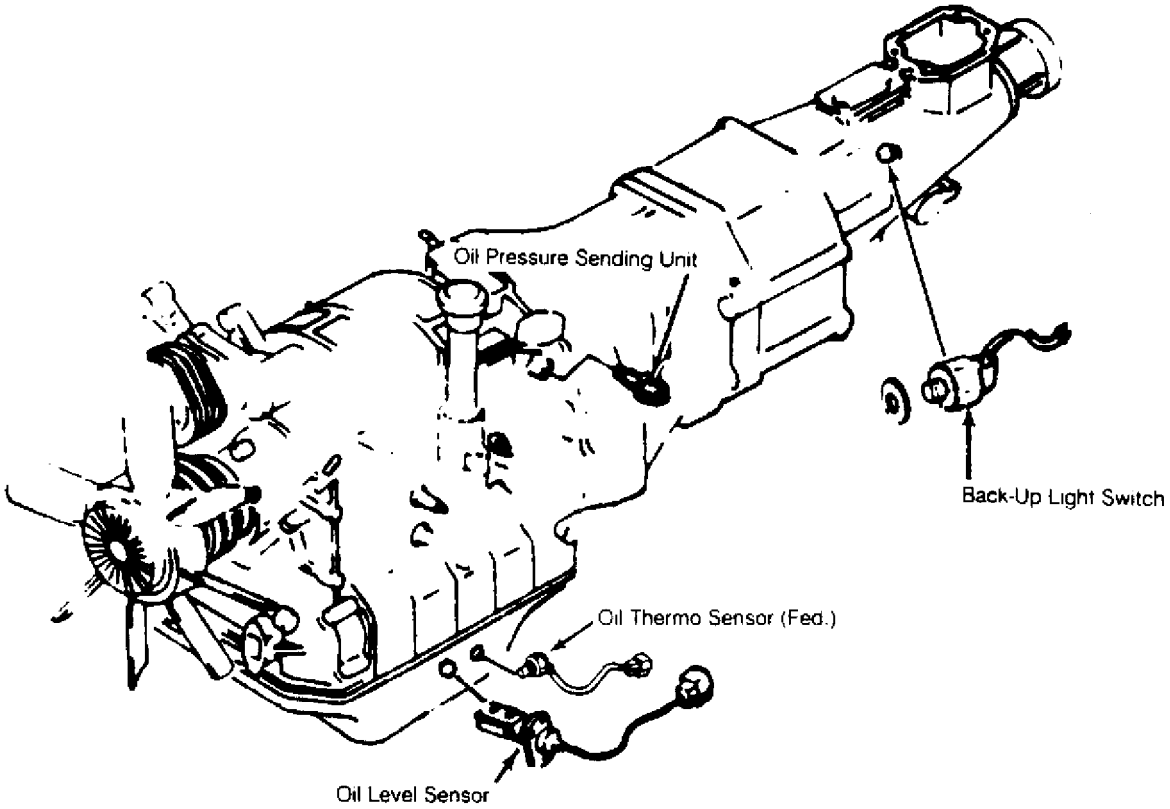

Oil Pressure Sending Unit	On rear left side of block below oil filter.

ELECTRICAL COMPONENT LOCATOR
Article Text (p. 12)

Copyright © 1998 Mitchell Repair Information Company, LLC
Sunday, August 26, 2001 03:30PM

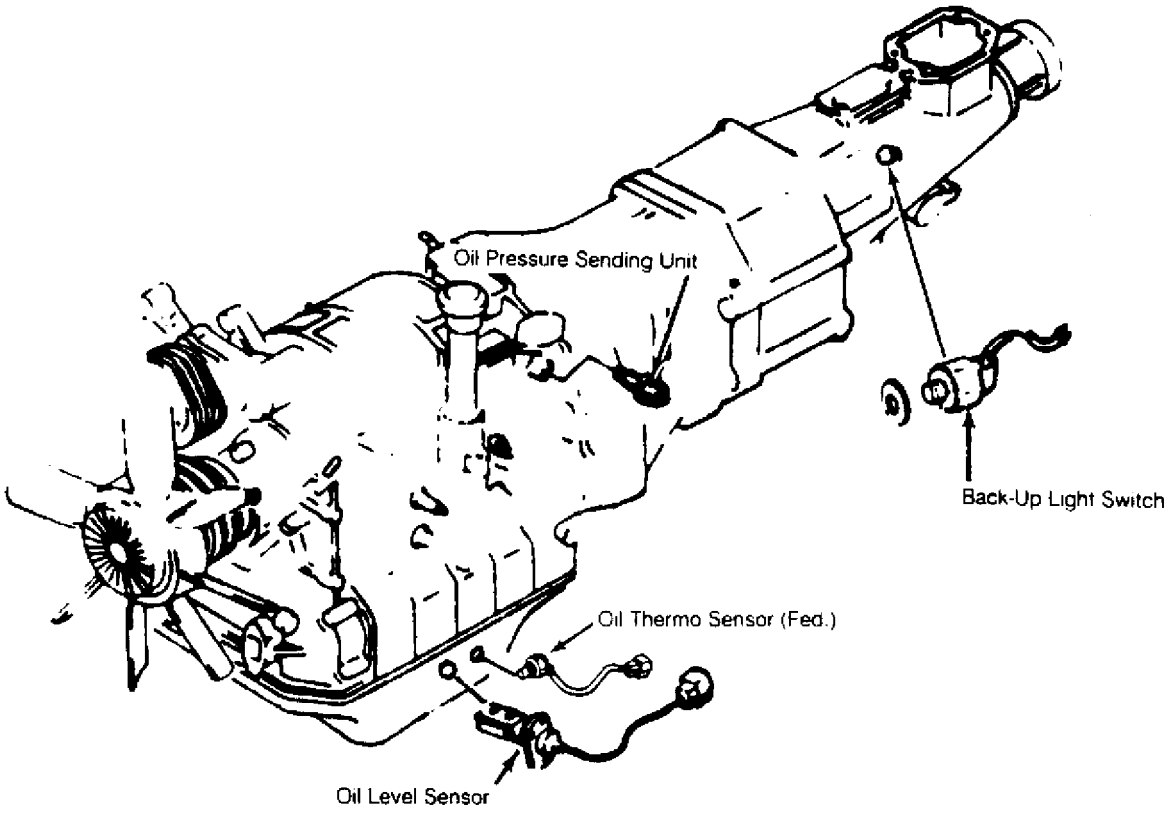

Oil Thermo Sensor (Fed.), (Graphic 1)	In left side of oil pan.

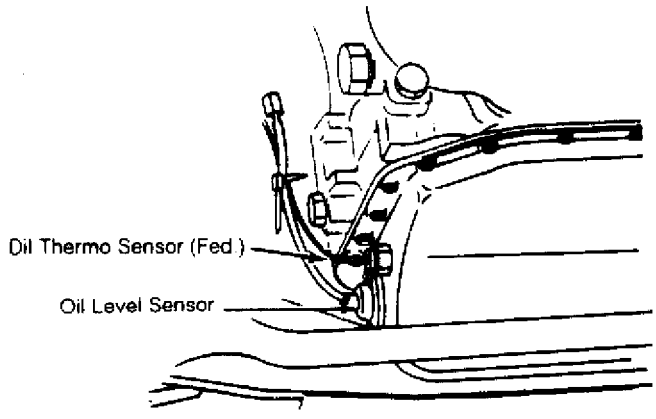

Oil Thermo Sensor (Fed.), (Graphic 2)	In left side of oil pan.
Throttle Sensor	On carburetor throttle linkage.
Washer Fluid Level Sensor	On bottom of washer fluid reservoir.

ELECTRICAL COMPONENT LOCATOR
Article Text (p. 13)

Copyright © 1998 Mitchell Repair Information Company, LLC
Sunday, August 26, 2001 03:30PM

SOLENOIDS/SOLENOID VALVES

Component	Component Location

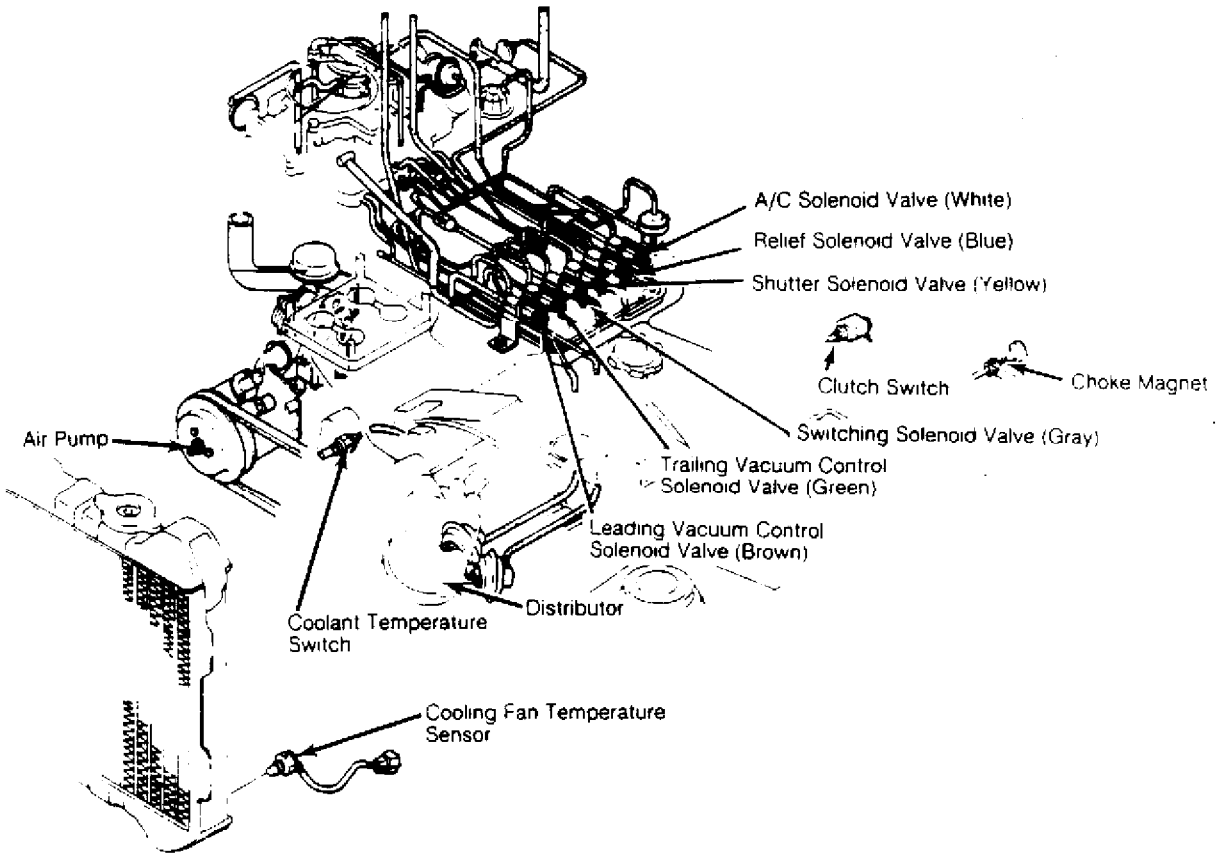

A/C Solenoid Valve (White), (Graphic 1)	In solenoid block on left side of engine.

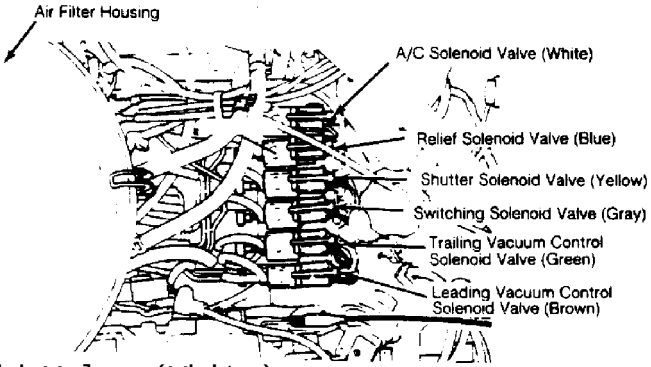

A/C Solenoid Valve (White), (Graphic 2)	In solenoid block on left side of engine.

ELECTRICAL COMPONENT LOCATOR
Article Text (p. 14)

Copyright © 1998 Mitchell Repair Information Company, LLC
Sunday, August 26, 2001 03:30PM

Air Vent Solenoid Valve	On side of carburetor.
Downshift Solenoid (A/T)	On left side of transmission case.
Fuel Door Release Solenoid	In left rear quarter panel.

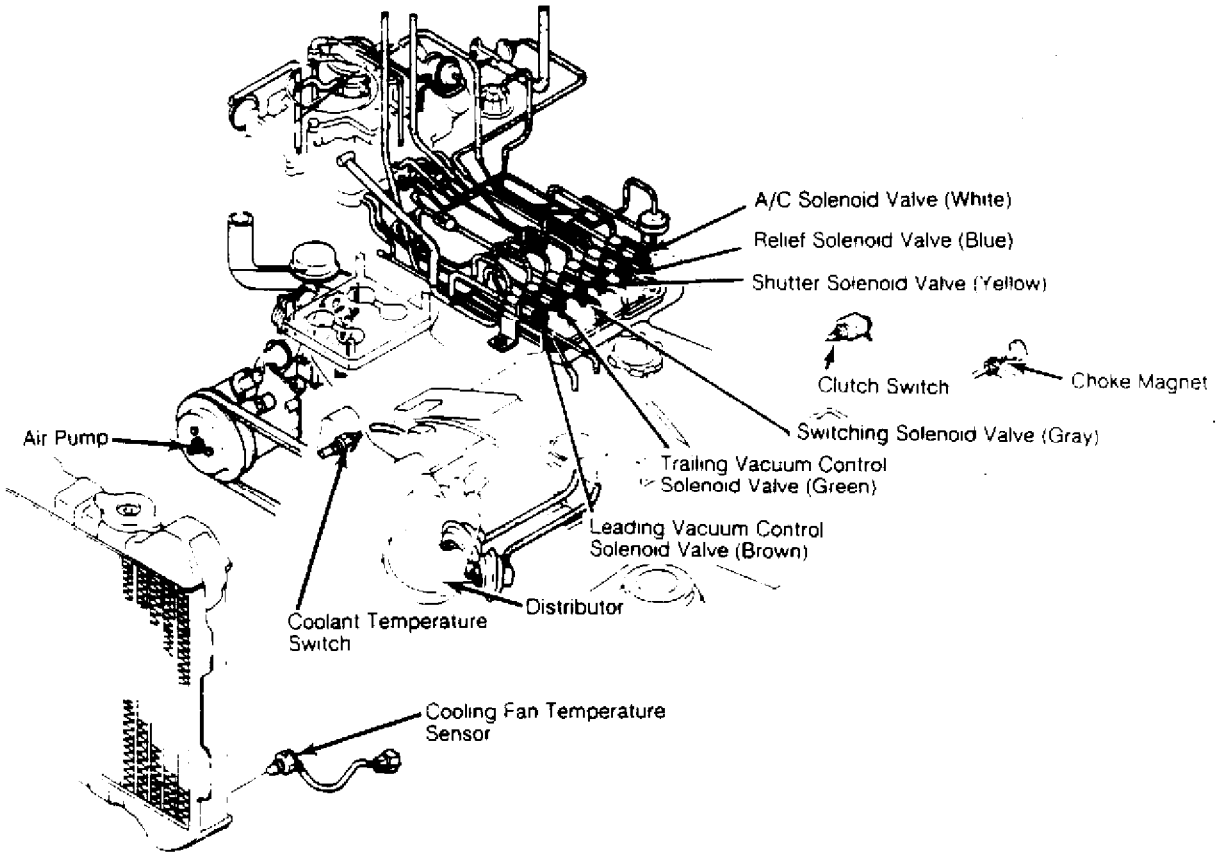

Leading Vacuum Control Solenoid, Valve (Brown), (Graphic 1)	In solenoid block on left side of engine.

ELECTRICAL COMPONENT LOCATOR
Article Text (p. 15)

Copyright © 1998 Mitchell Repair Information Company, LLC
Sunday, August 26, 2001 03:30PM

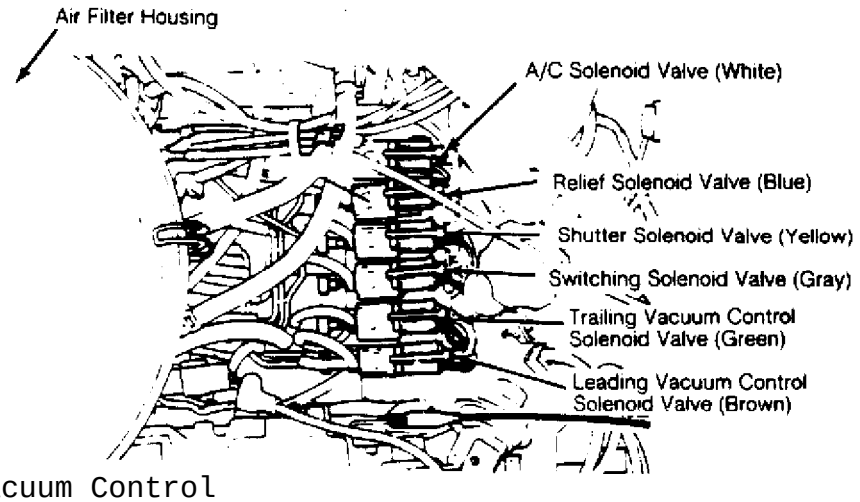

Leading Vacuum Control Solenoid, Valve (Brown), (Graphic 2)	In solenoid block on left side of engine.
Rear Hatch Release Solenoid	In center of rear finish panel.

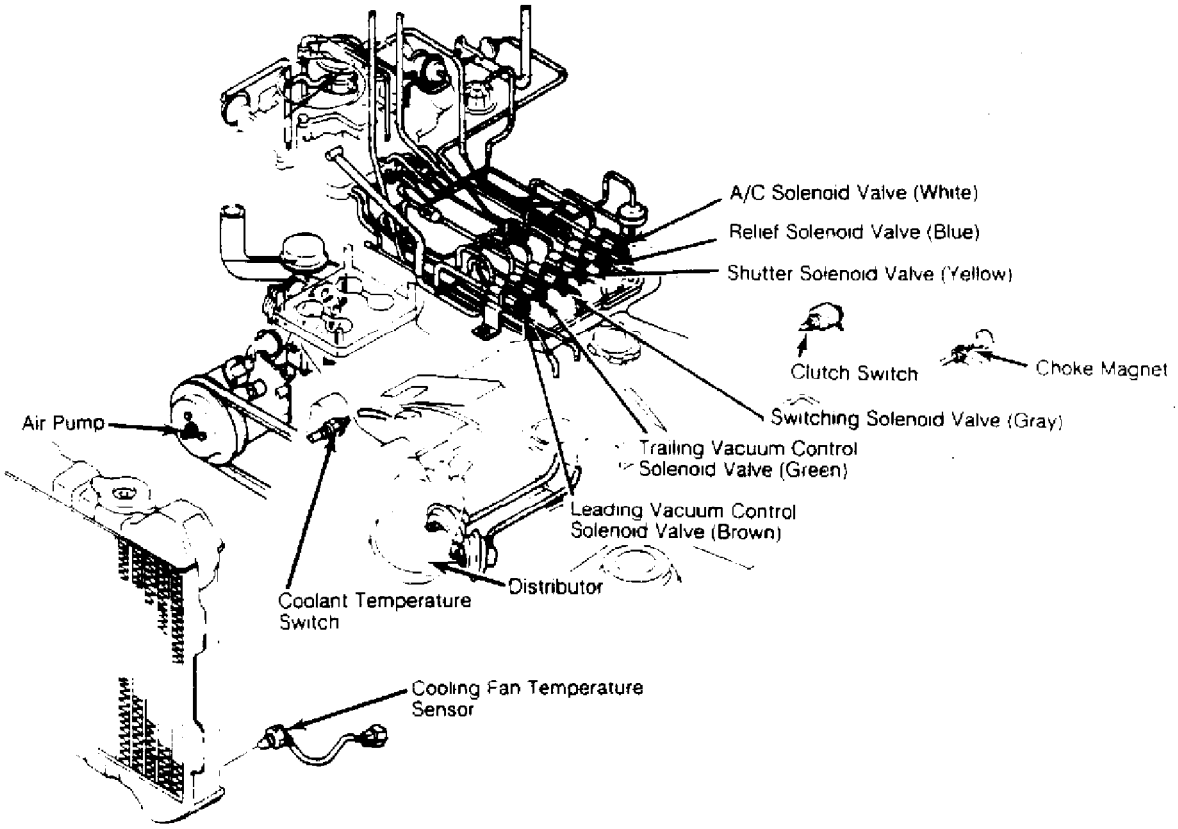

Relief Solenoid Valve (Blue), (Graphic 1)	In solenoid block on left side of engine.

ELECTRICAL COMPONENT LOCATOR
Article Text (p. 16)

Copyright © 1998 Mitchell Repair Information Company, LLC
Sunday, August 26, 2001 03:30PM

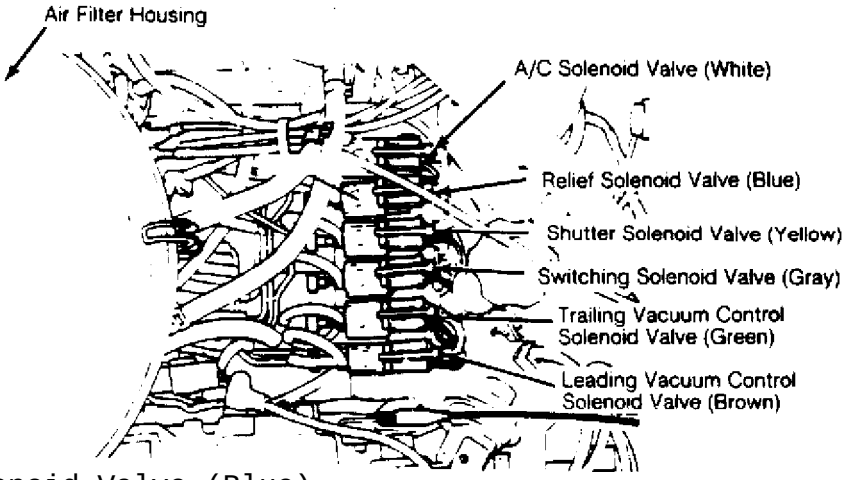

Relief Solenoid Valve (Blue), (Graphic 2) — In solenoid block on left side of engine.

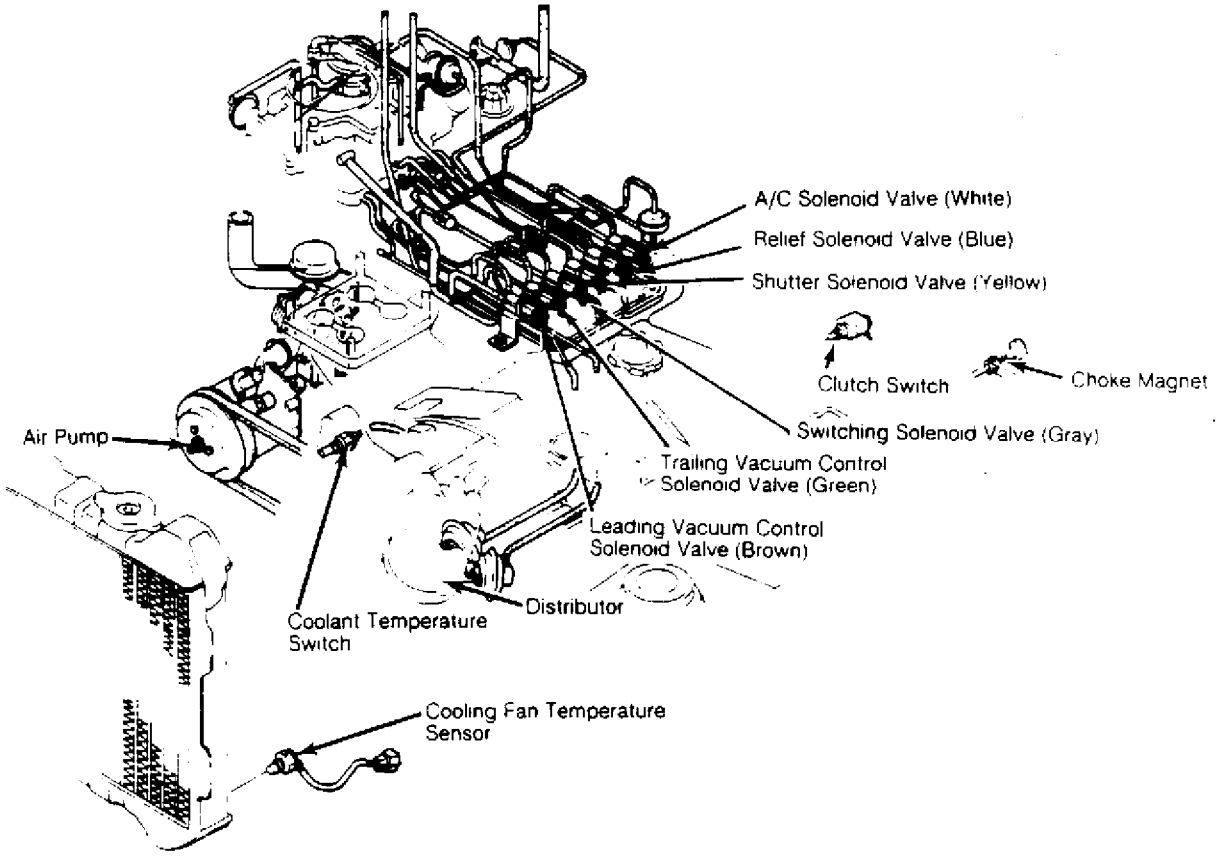

Shutter Solenoid Valve (Yellow), (Graphic 1) — In solenoid block on left side of engine.

ELECTRICAL COMPONENT LOCATOR
Article Text (p. 17)

Copyright © 1998 Mitchell Repair Information Company, LLC
Sunday, August 26, 2001 03:30PM

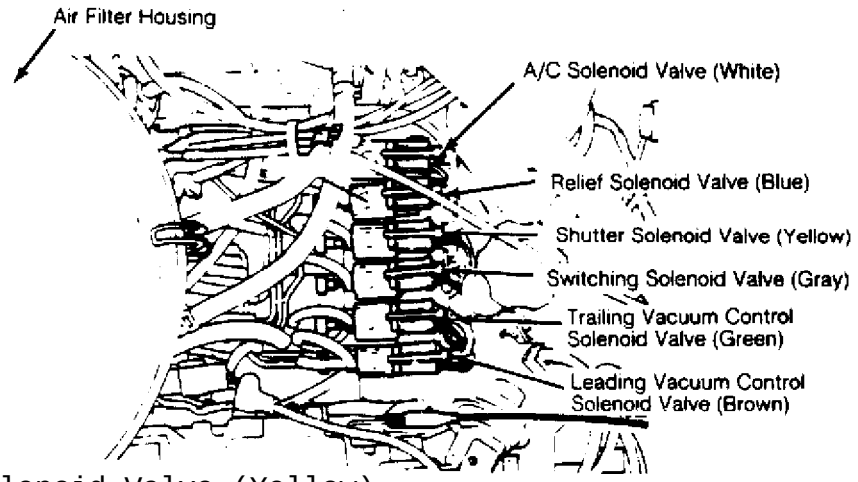

Shutter Solenoid Valve (Yellow), (Graphic 2) In solenoid block on left side of engine.

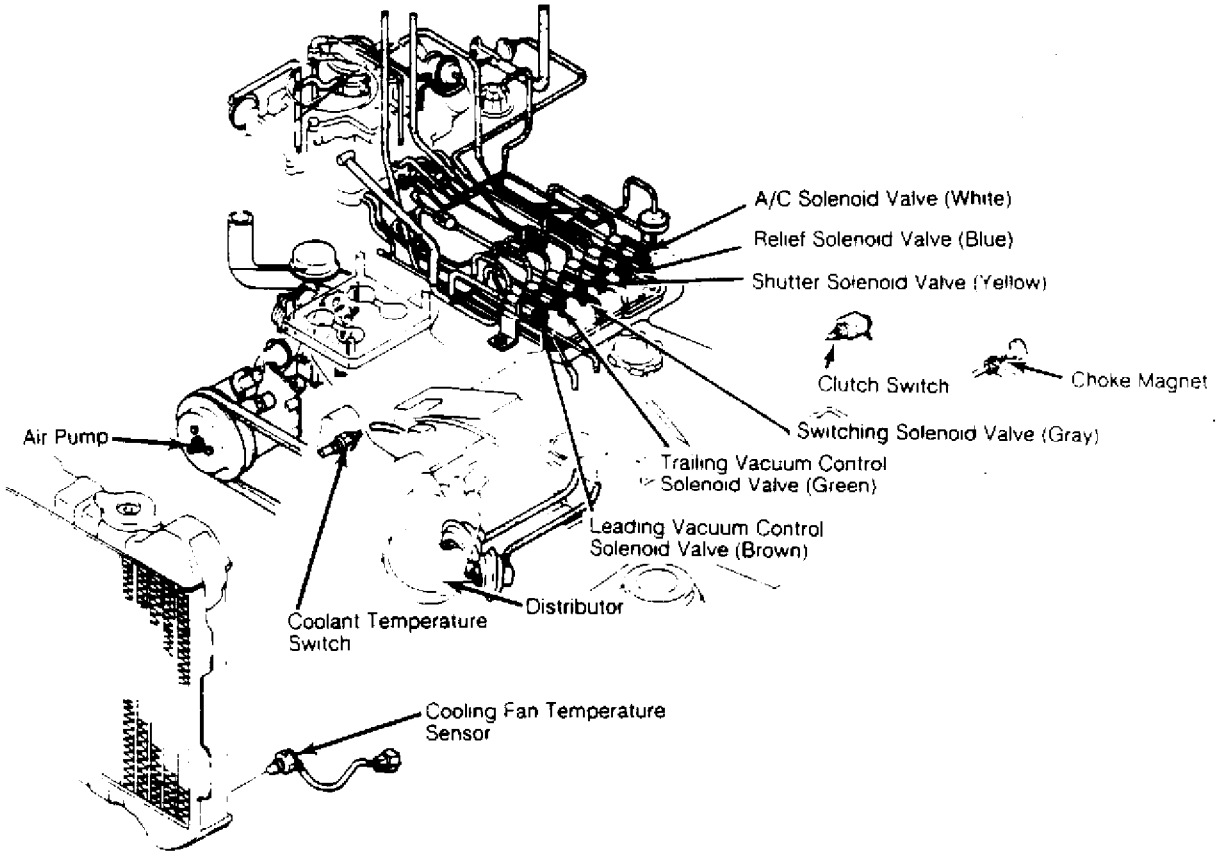

Switching Solenoid Valve (Gray), (Graphic 1) In solenoid block on left side of engine.

ELECTRICAL COMPONENT LOCATOR
Article Text (p. 18)

Copyright © 1998 Mitchell Repair Information Company, LLC
Sunday, August 26, 2001 03:30PM

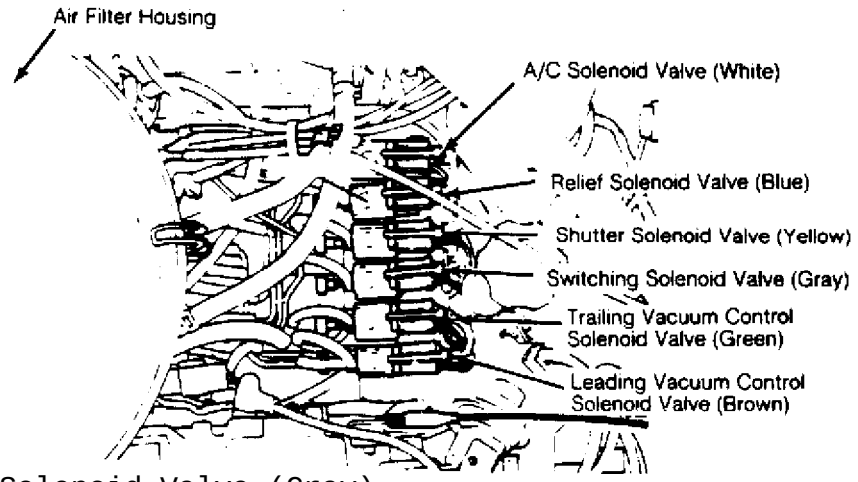

Switching Solenoid Valve (Gray), (Graphic 2) In solenoid block on left side of engine.

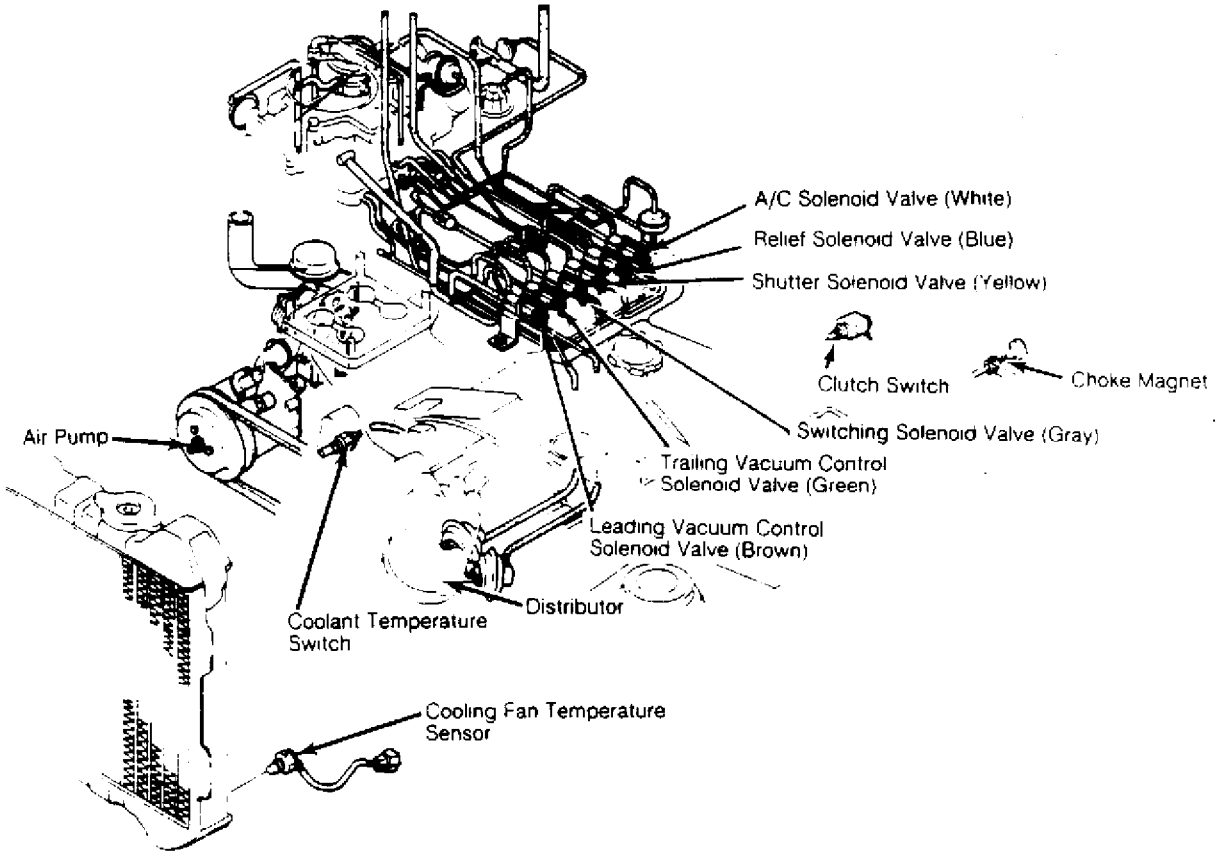

Trailing Vacuum Control Solenoid, (Graphic 1) In solenoid block on left side of engine.

ELECTRICAL COMPONENT LOCATOR
Article Text (p. 19)

Copyright © 1998 Mitchell Repair Information Company, LLC
Sunday, August 26, 2001 03:30PM

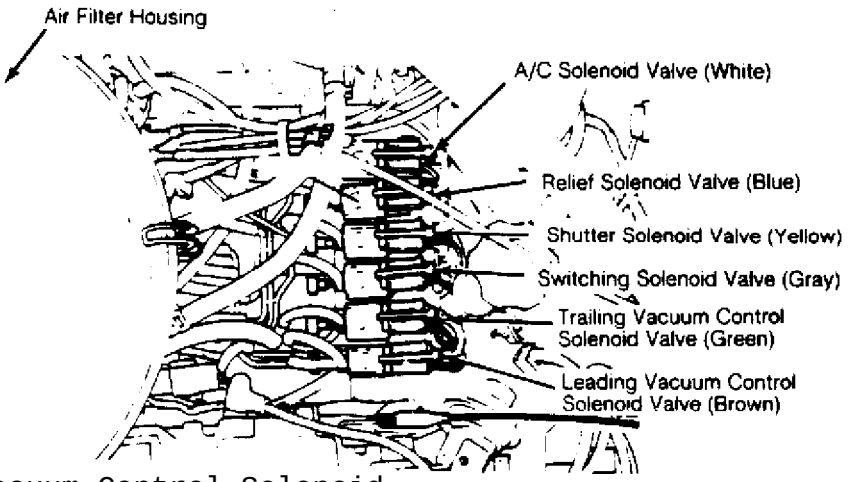

Trailing Vacuum Control Solenoid, (Graphic 2)	In solenoid block on left side of engine.

SWITCHES

Component	Component Location
A/C Low Pressure Switch	Below right side of dash.

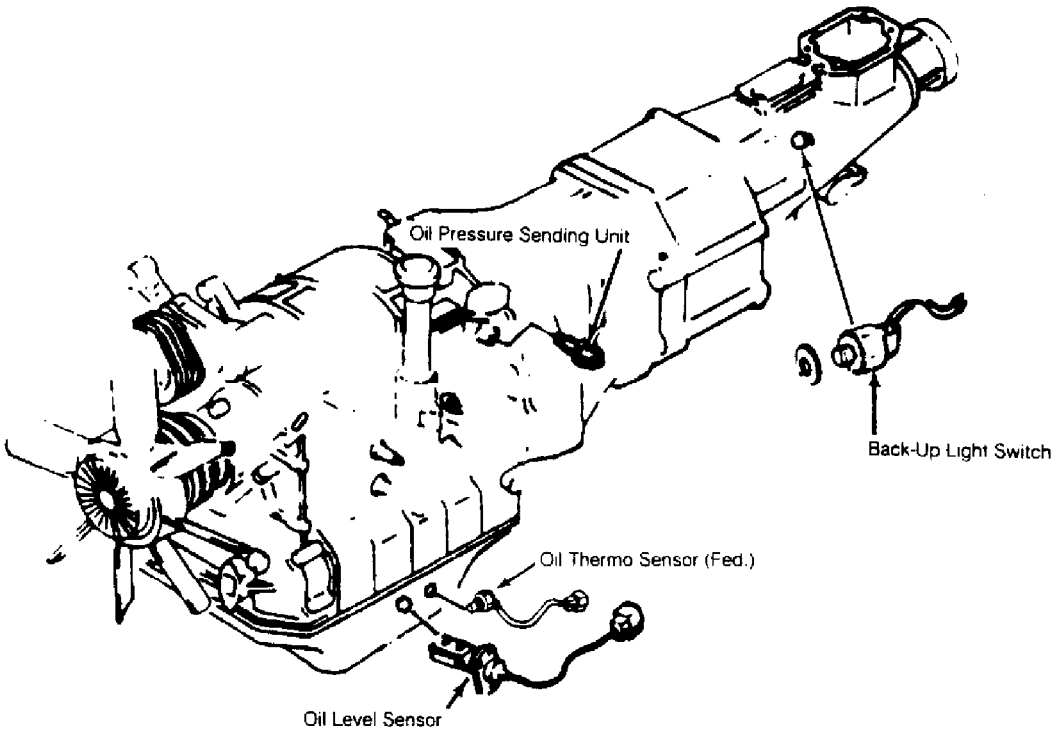

Back-Up Light Switch (M/T)	On left side of transmission case.

ELECTRICAL COMPONENT LOCATOR
Article Text (p. 20)

Copyright © 1998 Mitchell Repair Information Company, LLC
Sunday, August 26, 2001 03:30PM

Brake/Stop Light Switch	On top of brake pedal bracket.

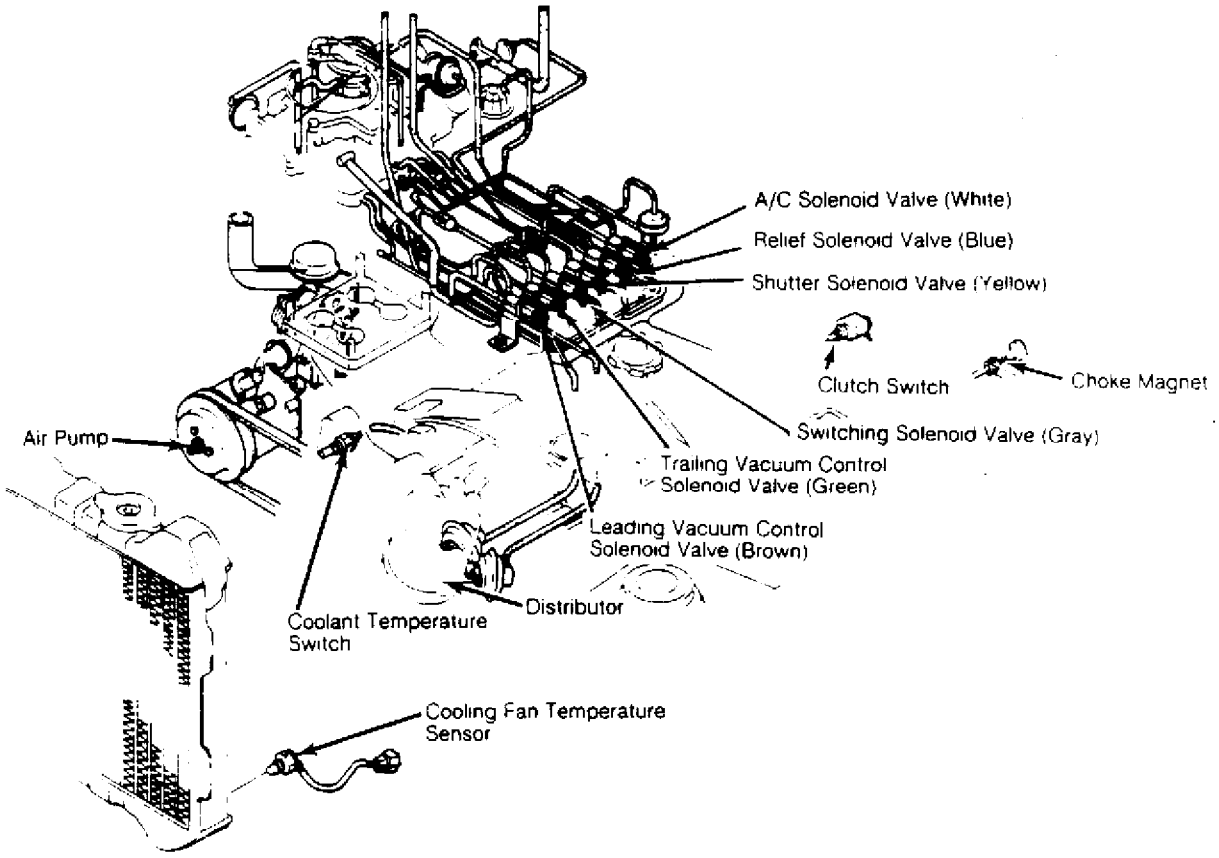

Clutch Switch	On top of clutch pedal bracket.

ELECTRICAL COMPONENT LOCATOR
Article Text (p. 21)

Copyright © 1998 Mitchell Repair Information Company, LLC
Sunday, August 26, 2001 03:30PM

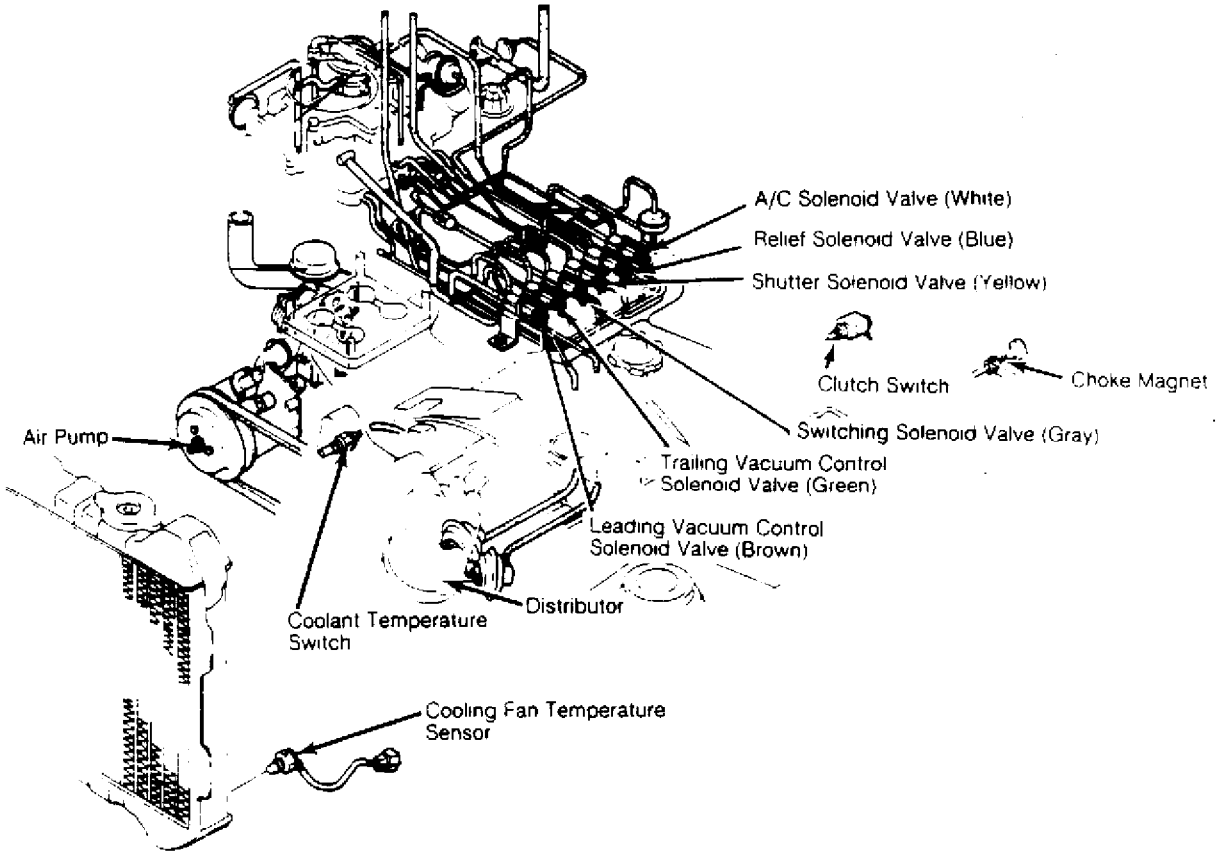

Coolant Temperature Switch	At water pump.
Inhibitor Switch (A/T)	On left side of transmission case.
Kickdown Switch	On accelerator pedal bracket.
Parking Brake Switch	On bottom of parking brake lever.

END OF ARTICLE

ALTERNATOR & REGULATOR
Article Text

Copyright © 1998 Mitchell Repair Information Company, LLC
Sunday, August 26, 2001 03:30PM

ARTICLE BEGINNING

1983 Alternators & Regulators
MITSUBISHI ALTERNATORS WITH INTEGRAL REGULATORS

Mazda

DESCRIPTION

Mitsubishi alternators are conventional 3-phase, self-rectifying type units containing 6 diodes (3 positive and 3 negative) which are used to rectify current. A case-mounted Integrated Circuit (IC) regulator is used on all models.

APPLICATION

Model	Volt/Amps	Part No.
Mazda		
B2000	13.5/50	A00IT23370
B2200	13.5/40	A00IT23479
GLC		
FWD	12/50	(1) E56318300A
RWD	14/30	(1) D50116300R
RX7	12/50	(1) N22118300
626	12/60	(1) FE0118300R

(1) - Vehicle manufacturer's part number.

TESTING

ON-VEHICLE TEST

CAUTION: DO NOT short across any alternator terminals or run vehicle with any wires disconnected. Battery must be fully charged for tests to be accurate.

Output Test
1) With ignition switch off, check voltage at "R" terminal and "L" terminal. Reading at both terminals should be 0 volts. If not 0 volts, alternator is defective.
2) Turn ignition switch on but do not start engine. Voltage at "L" should be 1-3 volts. If voltage is 0, alternator and regulator are defective.
3) If voltage at "L" is close to battery voltage with ignition on, short circuit the "F" terminal to rear alternator housing. See Fig. 1.

Copyright © 1998 Mitchell Repair Information Company, LLC
Sunday, August 26, 2001 03:30PM

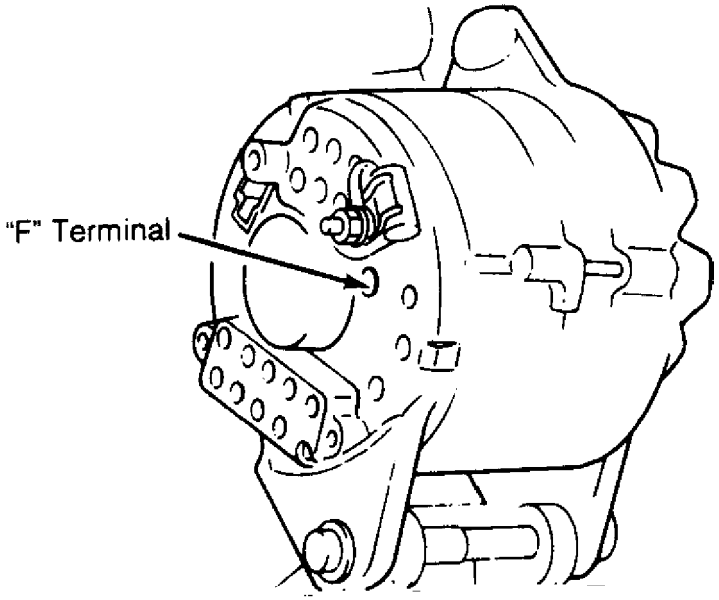

29386
Fig. 1: Alternator "F" Terminal Location
Terminal is located .8" (20 mm) below the hole.

4) Read the voltage at "L" with "F" terminal shorted. If voltage is lower than battery voltage, regulator is defective. If voltage is close to battery voltage, alternator is defective.

5) With ignition switch off and battery ground cable disconnected, connect ammeter between alternator terminal "B" and cable. Connect voltmeter between "B" (+) terminal and ground. See Fig. 2.

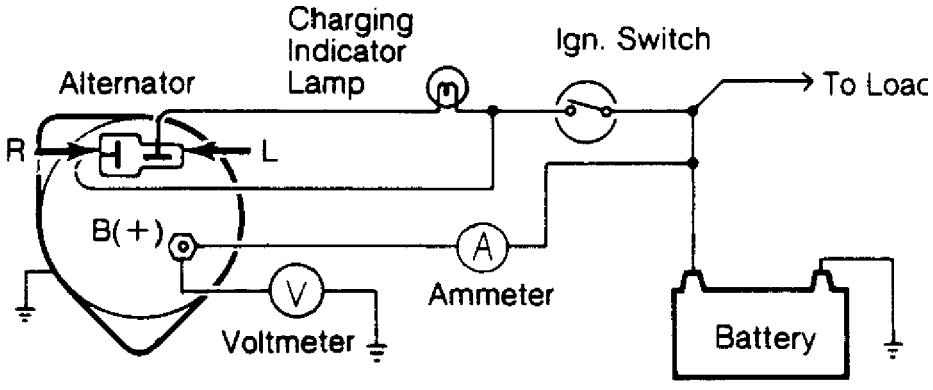

29387
Fig. 2: Alternator Output Test Arrangement

6) Start engine and accelerate to 2000-3000 RPM. Turn on all lights and check ammeter for output.

OVERHAUL

DISASSEMBLY

Copyright © 1998 Mitchell Repair Information Company, LLC
Sunday, August 26, 2001 03:30PM

1) After removing through bolts, insert screwdriver between front housing and stator to separate.
2) Hold the rotor in a soft jawed vice. Remove pulley nut, pulley, fan, and spacer. Remove rotor drive end housing by lightly tapping end housing with a soft mallet.
3) To separate stator from diode end housing, unsolder three negative diode leads and connections between diodes. Hold the stator lead with a needle nose plier to prevent rectifier from overheating.
4) Remove condenser from the "B" terminal. Unsolder the "L" and "B" terminal from the rectifier assembly. Lift out rectifier assembly and brush holder.

TESTING

Diode Assemblies
1) Check each diode with ohmmeter in forward and reverse direction. If the diode shows large resistance in one direction and small resistance in other direction, diode is normal.
2) If diode shows small resistance in both directions, it is shorted. If large resistance is shown in both directions, diode is open. Heat sink and diodes are replaced as an assembly.

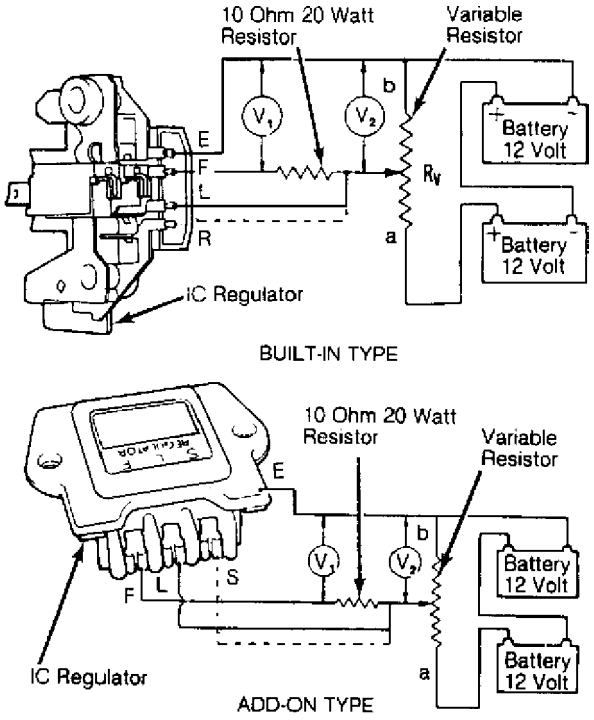

29388
Fig. 3: Testing Mitsubishi Integral Regulator
Ensure variable resistor is set to middle of resistance range.

Rotor Field Continuity
Check continuity across field coil slip rings. A reading of 3-4 ohms must be obtained. No continuity, replace rotor.

Copyright © 1998 Mitchell Repair Information Company, LLC
Sunday, August 26, 2001 03:30PM

Rotor Field Coil Ground
Check continuity between individual slip rings and rotor core/shaft. If there is continuity, coil or slip ring is grounded, replace rotor.

Stator Coil Ground
Ensure no continuity exists between stator coil leads and stator core.

Stator Coil Continuity
Check continuity between leads of stator coil. If there is no continuity, replace stator.

Brush Wear Limit
Brushes must be replaced when worn to 1/3 of original length. This limit is indicated by a wear limit line on the side of each brush.

Brush Spring Pressure
Standard tension should be 12-16 oz. (340-453 g). Replace if less than 7 oz. (198 g) or if springs are corroded.

COMPONENT REPLACEMENT

Brushes
To remove brushes from holder, unsolder pigtail from terminal. To replace, solder pigtail to terminal ensure that 1/4" of brush will be located in brush holder.

Diodes
The diodes and rectifier are serviced as an assembly. If any diodes are defective, replace rectifier assembly.

Drive End Bearing
Remove bearing retainer set screws. Press bearing out of front housing.

Rear Bearing
Remove rear bearing from housing assembly using a press or bearing puller.

Voltage Regulator
The voltage regulator and brush holder are combined in one unit. If regulator is found to be defective, replace as an assembly.

REASSEMBLY

Reassemble by reversing disassembly procedures. Soldering of rectifier leads should be done in less than 5 seconds to prevent damage to diodes. When installing the rotor assembly in the rear housing, hold the brushes in position by inserting a stiff piece of wire into the access hole in rear housing.

Copyright © 1998 Mitchell Repair Information Company, LLC
Sunday, August 26, 2001 03:30PM

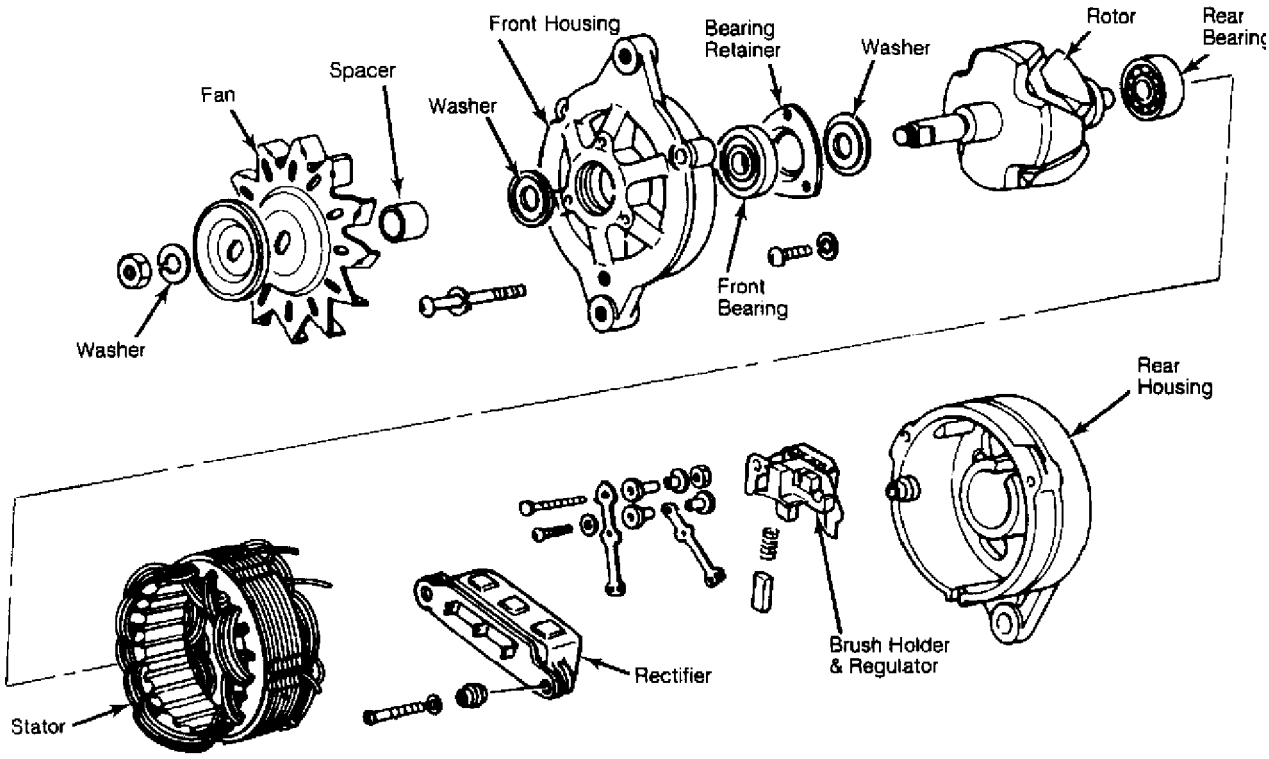

Fig. 4: Exploded View of Mitsubishi Alternator

END OF ARTICLE

FUSE & FLASHER LOCATIONS
Article Text

Copyright © 1998 Mitchell Repair Information Company, LLC
Sunday, August 26, 2001 03:30PM

ARTICLE BEGINNING

1983 Fuse Blocks, Flashers & Relays
MAZDA

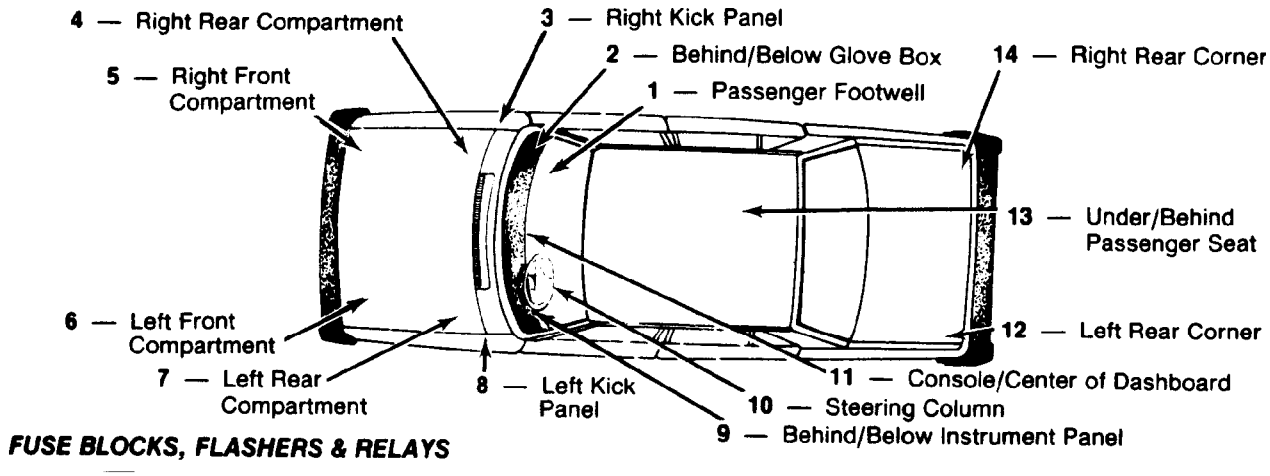

Fig. 1: Fuses & Flasher Locations

FUSES & FLASHER LOCATIONS

Manufacturer & Models	Component Location in Fig. 1:
Mazda	
B2000 & B2200 Pickups	
Fuse Locations	(7)
Flasher Locations	(9)
Relay Locations	
Check & Choke	(4)
Glow Plug	(7)
Horn, A/C	(6)
Wipers	(9)
GLC Hatchback	
Fuse Locations	(9)
Flasher Locations	(9)
Relay Locations	
Choke, A/C; Horn	(6)
Wipers, Others	(9)
GLC Wagon	
Fuse Locations	(9)
Flasher Locations	(9)
Relay Locations	
Check	(6)
Horn	(5)
Wipers	(9)
RX7	

FUSE & FLASHER LOCATIONS
Article Text (p. 2)

Copyright © 1998 Mitchell Repair Information Company, LLC
Sunday, August 26, 2001 03:30PM

Fuse Locations ..... (9)
Flasher Locations..... (8)
Relay Locations
Check & Choke, Hot Start, A/C ..... (7)
Horn, Antenna ..... (9)

626
Fuse Locations ..... (9)
Flasher Locations ..... (9)
Relay Locations
Wipers, Horn ..... (9)

END OF ARTICLE

FUSES & CIRCUIT BREAKERS
Article Text

Copyright © 1998 Mitchell Repair Information Company, LLC
Sunday, August 26, 2001 03:31PM

ARTICLE BEGINNING

Fuses & Circuit Breakers
1983-85 Mazda

RX7

FUSES & CIRCUIT BREAKERS

FUSE PANEL LOCATION

The main fuse block is located at the right rear side of the engine compartment and contains high amperage fuses which protect multiple circuits. Fuse box located above driver's left knee, accessible through a removable cover, contains fuses for individual circuits.

FUSE PANEL & FUSE BLOCK IDENTIFICATION (1983-85)

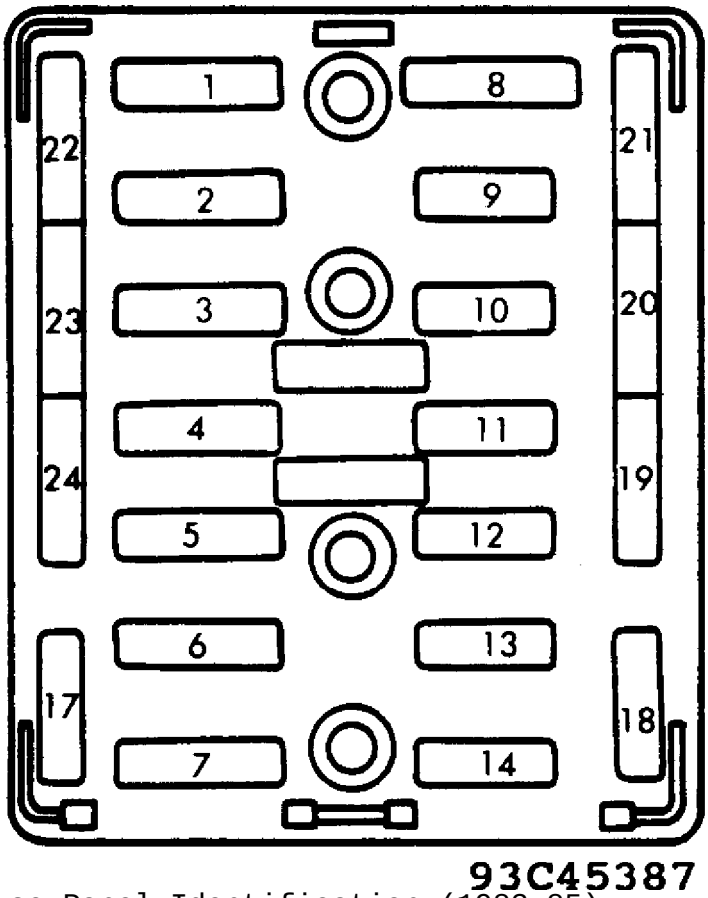

Fig. 1: Fuse Panel Identification (1983-85)
Courtesy of Mazda Motor of America Inc.

Copyright © 1998 Mitchell Repair Information Company, LLC
Sunday, August 26, 2001 03:31PM

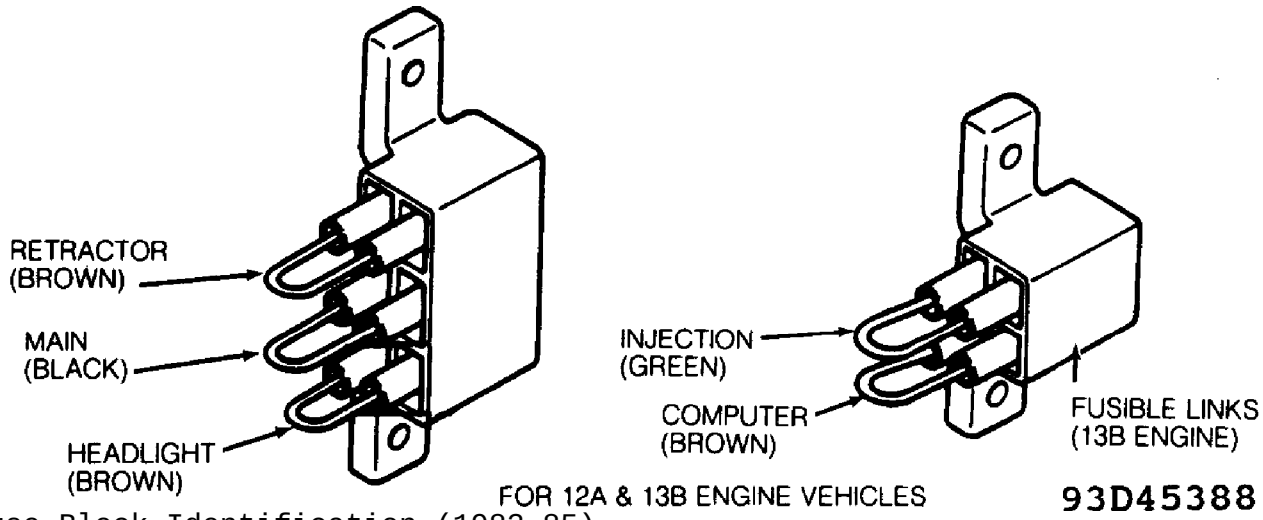

Fig. 2: Fuse Block Identification (1983-85)
Courtesy of Mazda Motor of America Inc.

1 - Empty
2 - 15 Amp
Horn
3 - 15 Amp
Hazard Warning Lights
4 - 10 Amp
Taillights
5 - 20 Amp
Roof Opener
6 - 10 Amp
Cigarette Lighter
7 - 20 Amp
Radio & Antenna
8 - 15 Amp
Gauges & Back-Up Lights
9 - 20 Amp
Engine
10 - 30 Amp
Power Windows
11 - 20 Amp
Heater Blower
12 - 15 Amp
Rear Defogger
13 - 15 Amp
Windshield Wipers
14 - 10 Amp
Rear Wiper
15 - Empty
16 - Empty
17 - Empty
18 - Empty
19 - 15 Amp
Air Conditioning
20 - Empty

Copyright © 1998 Mitchell Repair Information Company, LLC
Sunday, August 26, 2001 03:31PM

21 - Empty
22 - Empty
23 - Empty
24 - Empty

CAUTIONS & WARNINGS

BRAKE PAD WEAR INDICATOR

Indicator will cause a squealing or scraping noise warning that the pads need replacement.

HEADLIGHT RETRACTOR

Never operate headlight retractor when a person's hands, or other objects are on or near the headlights. When working on the headlights always remove the headlight retractor fuse.

AIR BAG SYSTEM

Always remove air bag system fuse when working on any controls associated with the steering wheel or steering column.

END OF ARTICLE

IGNITION SYSTEM
Article Text

Copyright © 1998 Mitchell Repair Information Company, LLC
Sunday, August 26, 2001 03:31PM

ARTICLE BEGINNING

1983 Distributors & Ignition Systems
MITSUBISHI ELECTRONIC IGNITION - MAZDA ROTARY ENGINE

Mazda RX7

DESCRIPTION

The Mitsubishi electronic ignition system, used on the Mazda RX7 rotary engine, is unique in that it has 2 sets of spark plugs (leading and trailing). There is one set in the front rotor housing and one in the rear rotor housing. See Fig. 1. There are also 2 ignition coils, 2 pick-up coils located in the distributor, and 2 coil-to-distributor high tension wires.

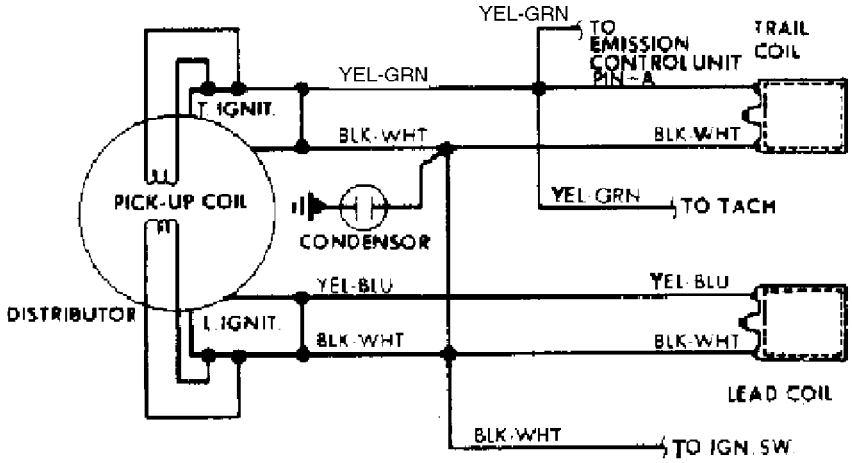

Fig. 1: Schematic of RX7 Ignition System

There are 2 separate igniters, mounted externally on the distributor housing. One is for the leading side and the other for the trailing side. Other system components include a battery, ignition switch, ignition control switches, (water temperature, altitude, etc.), and various relays.

All models are equipped with an ignition control system and centrifugal advance mechanisms. All models have vacuum control units for both leading and trailing sides.

OPERATION

A reluctor (signal rotor) is mounted on the reluctor (rotor) shaft. It turns inside 2 magnetic pick-up coils, one for the leading side and one for the trailing side. See Fig. 2.

As each tooth of the reluctor approaches and then passes the leading pick-up coil, a signal is generated. It is sent to the leading ignitor, which breaks the primary circuit in the leading ignition coil.

Copyright © 1998 Mitchell Repair Information Company, LLC
Sunday, August 26, 2001 03:31PM

As each tooth passes the leading pick-up coil, the previous passing tooth approaches and becomes aligned with the trailing pick-up coil. This triggers a signal to the trailing ignitor, which breaks the primary circuit in the trailing ignition coil.

Therefore, immediately after the leading spark plug fires, the trailing spark plug also fires, providing more complete and efficient combustion while reducing HC and CO emissions.

As the primary circuit is broken in the leading and trailing ignition coils, a voltage surge occurs in the secondary circuit of the ignition coils. This high voltage is transmitted through the leading and trailing high tension wires to the distributor, rotor and spark plugs.

An emission control unit is also included in the ignition control system, along with different sensing switches to provide proper timing under varying engine operating conditions.

ADJUSTMENTS

RELUCTOR-TO-PICK-UP COIL AIR GAP

1) Remove distributor cap and rotor. Turn distributor shaft until the extended tooth of the reluctor (signal rotor) aligns with core of pick-up coil. See Fig. 2.

2) Using a feeler gauge, check for .020-.035" (.5-.9 mm) air gap. If gap is incorrect, replace pick-up coil and bearing assembly or distributor drive shaft, if necessary.

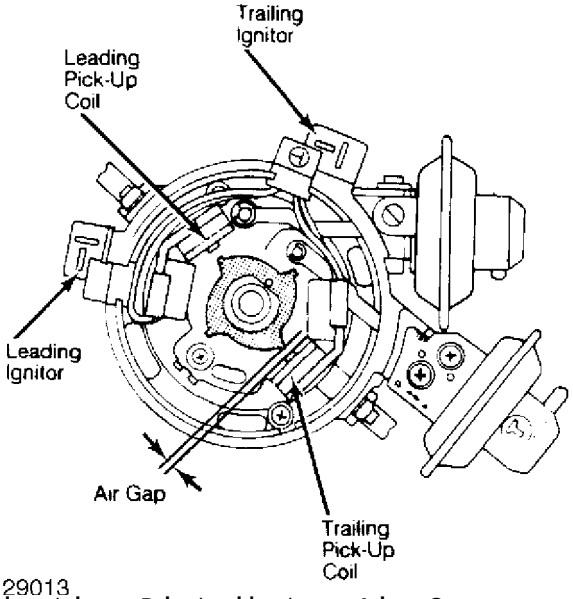

Fig. 2: Adjusting Distributor Air Gap
Check air gap at all teeth and both pick-up coils.

IGNITION TIMING

1) To adjust leading timing, loosen distributor lock nut, and rotate distributor housing until correct timing is obtained. See

Copyright © 1998 Mitchell Repair Information Company, LLC
Sunday, August 26, 2001 03:31PM

Fig. 3.

2) To adjust trailing timing, loosen the screws securing the trailing vacuum unit. Move the vacuum unit outward (to advance) or inward (to retard). Retighten screws when correct timing is obtained.

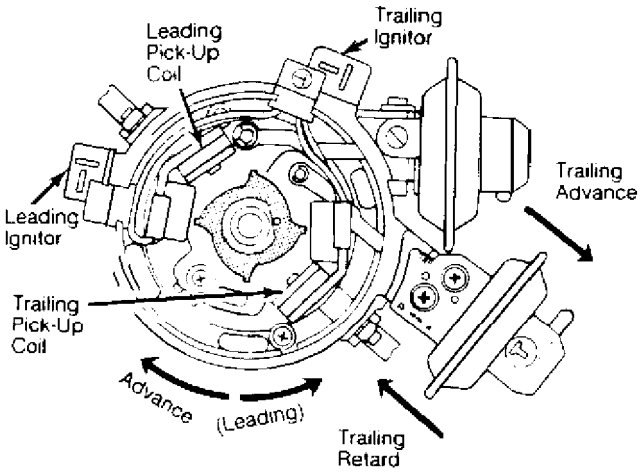

Fig. 3: Adjusting Ignition Timing
Distributor position determines leading time. Vacuum unit position adjusts trailing timing.

TESTING

HIGH TENSION WIRE RESISTANCE CHECK

Turn ignition switch "OFF". Connect ohmmeter leads to each end of coil-to-distributor high tension wire. Resistance should not exceed 16,000 ohms (plus or minus 400 ohms) per 39.37" (1 m).

IGNITION COIL RESISTANCE CHECK

Set an ohmmeter in the low scale. With ignition switch turned "OFF", and coil wires disconnected, attach ohmmeter leads to primary terminals of leading coil and then trailing coil. Primary resistance should be 1.22-1.48 ohms for each ignition coil.

PICK-UP COIL RESISTANCE CHECK

1) Set an ohmmeter in the x100 scale. Turn ignition switch "OFF". Disconnect connector between ignitor and distributor. See Fig. 4.

Copyright © 1998 Mitchell Repair Information Company, LLC
Sunday, August 26, 2001 03:31PM

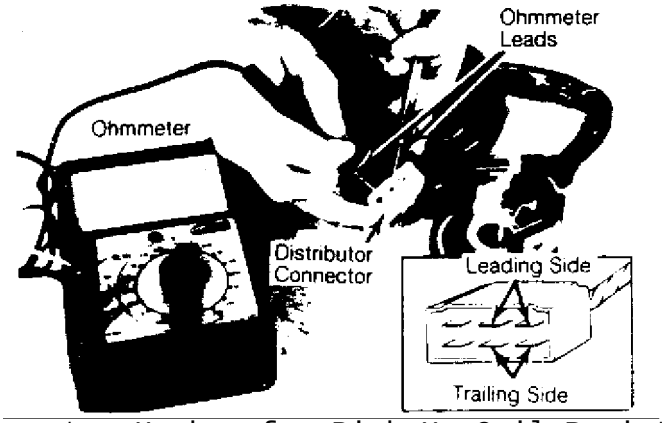

Fig. 4: Ohmmeter Hookup for Pick-Up Coil Resistance Check
Replace pick-up coil and bearing plate assembly if reading is not 600-700 ohms.

2) Connect ohmmeter leads to leading terminals and then to trailing terminals. Resistance should be 600-700 ohms at 68ø F (20ø C) for each set of pick-up coils. If not, replace pick-up coil and bearing assembly.

PICK-UP COIL OPERATION CHECK

1) With distributor connector still disconnected, touch ammeter leads to leading terminals and then to trailing terminals.
2) Place a screwdriver against core of pick-up coil being tested. Indicator of meter should move each time screwdriver is taken quickly away from core. If not, replace pick-up coil and bearing assembly.

IGNITER CHECK

1) Remove ignitor from distributor base. Make a circuit as shown in Fig. 5 using wire and a test bulb. Use a 12 volt bulb of less than 10 watts.

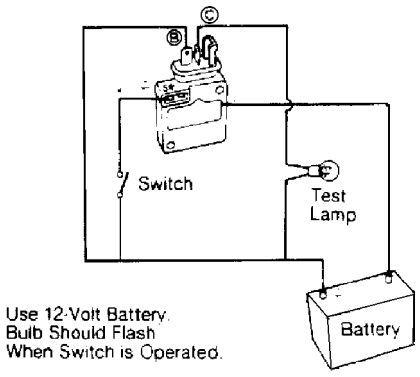

Fig. 5: Test Lamp Hookup for Checking Ignitor Operation
Bulbs should flash when switch is operated.

Copyright © 1998 Mitchell Repair Information Company, LLC
Sunday, August 26, 2001 03:31PM

2) Quickly operate switch "ON " and "OFF", and make sure test lamp flashes. If not, replace ignitor.

OVERHAUL

DISASSEMBLY

1) Remove distributor cap, rotor and seal cover. See Fig. 6. Remove igniters and attaching screws from distributor housing. Remove clips holding vacuum diaphragm links. Remove attaching screws and vacuum control units from distributor housing. Remove condenser.
2) Remove reluctor shaft attaching screw from end of shaft. Remove pick-up coil base bearing attaching screws. Remove reluctor, reluctor shaft, pick-up coils and coil base bearing assembly from top of distributor drive shaft.
3) Remove reluctor from reluctor shaft, using puller. Remove spring pin. Remove governors by removing springs. Drive lock pin out of drive gear, using a small drift. Remove gear and washers. Remove drive shaft through top of distributor housing.

REASSEMBLY

1) Inspect distributor cap and rotor for cracks, carbon tracks, and burned or corroded terminals.
2) Assemble distributor in reverse order of disassembly, noting the following: Install reluctor shaft onto distributor drive shaft, engaging slots of reluctor shaft and governor pins. Install pick-up coil and coil base bearing assembly and tighten attaching screws. Install reluctor on shaft, driving spring pin in with a punch.

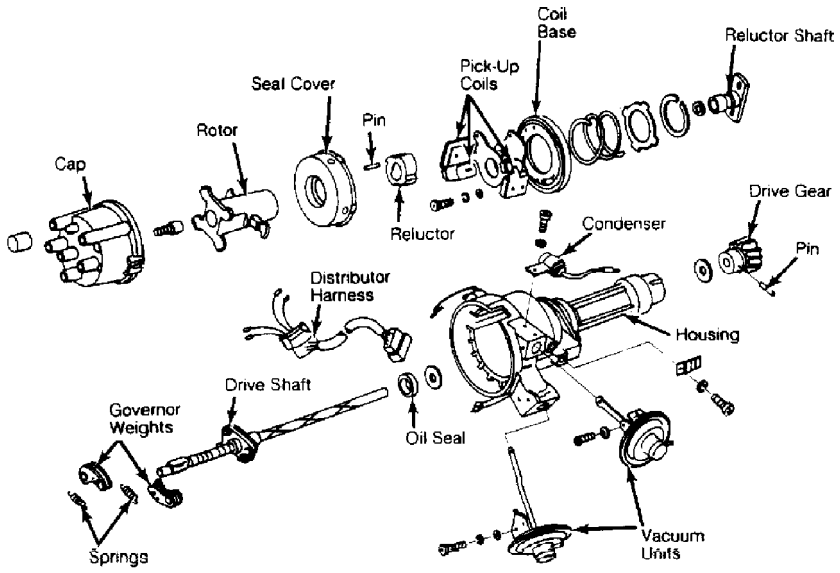

Fig. 6: Disassembled View of RX7 Mitsubishi Distributor

END OF ARTICLE

STARTER - HITACHI/MITSUBISHI
Article Text

Copyright © 1998 Mitchell Repair Information Company, LLC
Sunday, August 26, 2001 03:31PM

ARTICLE BEGINNING

1983 Starters
HITACHI & MITSUBISHI

Mazda

DESCRIPTION

Starter is a conventional 12-volt, 4-pole brush-type motor, with either direct or reduction gear drive. The starter-mounted solenoid shifts overrunning clutch and pinion into flywheel when starter is energized.

MITSUBISHI STARTER APPLICATION TABLE

Model	Type or Part No.
Mazda	
B2000 Pickup Gasoline	
Man. Trans.	(1) HE19-18-400A
Auto. Trans.	(1) HE20-18-400
B2200 Pickup Diesel	(1) S211-18-400
GLC	
FWD Sedan	(1) E301-18-400
RWD Wagon	
Man. Trans.	(1) D501-18-400
Auto. Trans.	(1) D502-18-400
RX7	
Man. Trans.	(1) N221-18-400
Auto. Trans.	(1) N202-18-400A
626	(1) FE05-18-400

(1) - Vehicle manufacturer's part number.

TESTING

STARTER PERFORMANCE TESTS

No Load Tests
Connect starter in series with a 12-volt battery, a voltmeter and a 1000 amp ammeter. Compare readings with Starter No Load Specifications.

MITSUBISHI STARTER NO LOAD SPECIFICATIONS TABLE (1)

Application	Max. Amps	Min. RPM
Mazda		
B2000 Pickup	53	6800

Copyright © 1998 Mitchell Repair Information Company, LLC
Sunday, August 26, 2001 03:31PM

B2200 Pickup	180	3800
GLC		
FWD Sedan	53	6800
RWD Wagon	53	6800
RX7		
Man. Trans.	60	6500
Auto. Trans.	100	3500
626		
Man. Trans.	60	6500
Auto. Trans.	60	6600

(1) - Applied voltage of 11.5-12 volts.

Load (Lock Torque) Test

Mount starter in a test stand to perform torque measurement test. Follow manufacturer's instructions for test stand operation. With voltage adjusted, ammeter reading and torque should be within specifications.

MITSUBISHI STARTER LOAD TEST SPECIFICATIONS TABLE (1)

Application	Max. Amps	Volts	Torque Ft. Lbs. (N.m)
Mazda			
B2000 Pickup	310	5	5.4 (7.5)
B2200 Pickup	1050	2	21.7 (30)
GLC			
FWD	310	5	5.4 (7.5)
Wagon	310	5	5.4 (7.5)
RX7			
Man. Trans.	600	5	6.9 (9.6)
Auto. Trans.	1100	4	22.4 (31)
626	310	5	5.4 (7.5)

(1) - Turning speed not specified by manufacturer.

SOLENOID TESTS

NOTE: Make tests with solenoid removed from starter or remove solenoid lead to starter before testing. Ensure solenoid plunger and sleeve are clean and dry before performing tests. Make tests in less than 10 seconds to prevent coil damage.

Pull-In Coil Test

1) Connect jumper between positive post of 12-volt battery and "S" terminal. Connect a second jumper to negative battery terminal and touch "M" (MT) terminal (and between terminal "S" and switch body). See Fig. 1.

Copyright © 1998 Mitchell Repair Information Company, LLC
Sunday, August 26, 2001 03:31PM

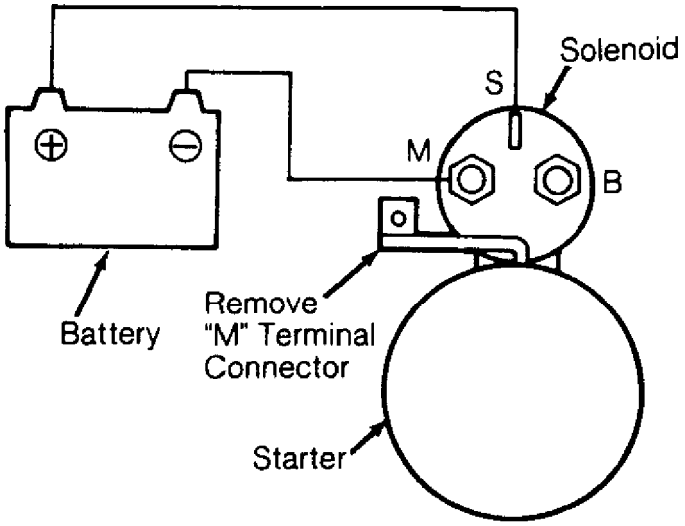

29414
Fig. 1: Connections for Conducting Solenoid Pull-In Test
Remove solenoid-to-starter lead before testing.

2) If pinion moves outward (or plunger is pulled-in), pull-in coil is good. If not, replace magnetic switch.

Hold-In Coil Test

1) Connect a jumper wire between the "M" (MT) terminal and solenoid case. Apply 8 volts to "S" terminal to pull in the plunger. See Fig. 2. Disconnect lead to "M" (MT) terminal.

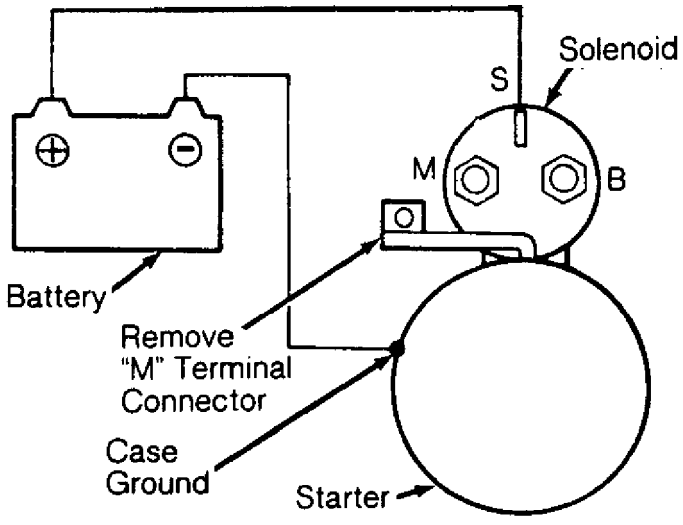

29415
Fig. 2: Connections for Conducting Solenoid Hold-In Test
Make tests in less than 10 seconds to avoid solenoid damage.

2) If pinion remains out (plunger is pulled-in), hold-in coil is good. If not, replace magnetic switch.

Return Test

Copyright © 1998 Mitchell Repair Information Company, LLC
Sunday, August 26, 2001 03:31PM

1) Apply 12 volts between "M" (MT) terminal and the solenoid case. Pull pinion out and release it (push plunger into solenoid body by hand). See Fig. 3.

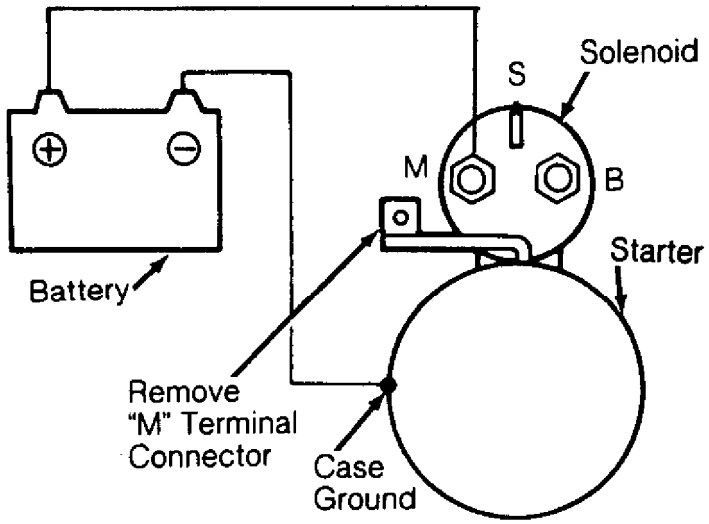

Fig. 3: Connections for Conducting Return Test
Connect battery to "M" terminal and solenoid case.

2) If the case is short-circuited, the pinion will remain out (plunger will be attracted). If nothing happens, solenoid is good.

REMOVAL & INSTALLATION

1) On all models, remove negative battery cable. If necessary raise vehicle on hoist. Remove starter mounting bolts. Remove starter from vehicle.
2) To install, reverse removal procedure.

OVERHAUL

DISASSEMBLY

NOTE: Procedures may vary slightly between conventional and reduction gear starters.

1) Loosen nut securing connecting plate-to-magnetic switch "M" terminal. Remove screws securing magnetic switch and remove switch (solenoid) assembly. Remove through bolts and brush cover assembly. Tap yoke assembly loose with wooden mallet. Remove yoke, armature assembly and pinion shift lever.
2) Remove pinion stop ring from end of armature shaft by pushing stop ring to clutch side. Remove snap ring and overrunning clutch assembly from armature shaft.

CLEANING & INSPECTION

Copyright © 1998 Mitchell Repair Information Company, LLC
Sunday, August 26, 2001 03:31PM

Clean all parts. Do not use grease dissolving solvent on overrunning clutch, armature assembly, solenoid assembly or field coils due to possible damage. Inspect all parts for damage or wear and replace as required.

BENCH TESTS

Brushes & Springs

Check brush spring tension using a spring scale. Check brush contact surface condition and brush length. Check lead clip and wire connections and condition of brush holders. Replace as required. See Brush Spring Tension and Minimum Brush Length Charts.

BRUSH SPRING TENSION TABLE

Application	Ozs. (g)
Mazda	
B2000 & B2200 Pickups	50-62 (1415-1766)
RX7	50-92 (1415-2604)
All Other Models	46-60 (1302-1700)

MINIMUM BRUSH LENGTH TABLE

Application	In. (mm)
Mazda	.45 (11.5)

Armature

Check external condition of armature for scoring or other damage. Measure shaft distortion with dial indicator. Replace armature if shaft distortion exceeds .004" (.10 mm).

Commutator

1) Inspect commutator for roughness, grooves, burns or pitting. Sand lightly with 500 grit sandpaper if necessary. Check commutator for out-of-round and mica insulators undercut to a depth of .020-.031" (.5-.8 mm).

2) If necessary, commutator may be turned less than .04" (1 mm) from original size and mica undercut. Replace if excessively worn.

Field Coil

1) Check field coil continuity by connecting test probe of circuit tester or an ohmmeter to the field coil positive terminal and brush holder. If circuit is open, replace field coil.

2) Check for grounding of field coils by placing one probe of circuit tester on starter housing and other probe to field coil positive terminal. If little or no resistance, field coil is grounded and must be replaced.

Copyright © 1998 Mitchell Repair Information Company, LLC
Sunday, August 26, 2001 03:31PM

Overrunning Clutch Assembly

1) Inspect pinion assembly and sleeve. Sleeve should slide freely on armature shaft and spline. If damage or resistance is noted, replace assembly.

2) Check pinion and flywheel teeth for excessive rubbing or damaged teeth. Replace as required.

Pinion Gear Clearance

1) The clearance between the pinion gear and pinion stopper collar should be .012-.098" (.3-2.5 mm) on Hitachi starters, or .02-.08" (.51-2.03 mm) on Mitsubishi starters, when solenoid is engaged. Adjust as necessary by changing shims between solenoid and starter yoke.

2) On Mazda B2200 models, projection distance (starter housing-to-front face of gear) should be .67" (17 mm). On Mazda RX-7 models, projection should be 1.06" (27.5 mm).

Pinion Case Bearing

Inspect bearing for wear and check side play. If clearance exceeds .008" (.2 mm), replace bearing. New bearing clearance should be .001-.004" (.025-.10 mm) for Hitachi or .002-.004" (.05-.10 mm) for Mitsubishi starters.

NOTE: Ensure that bearing is installed so that end of bearing is flush with gear case end.

REASSEMBLY

To reassemble, reverse disassembly procedure. Fill gear case on reduction gear models with grease. Lightly oil pinion and all bearing surfaces.

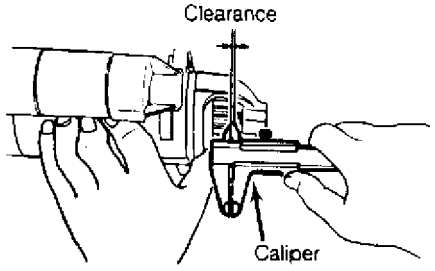

29418

Fig. 4: Measuring Pinion Edge-to-Pinion Stopper Clearance

Copyright © 1998 Mitchell Repair Information Company, LLC
Sunday, August 26, 2001 03:31PM

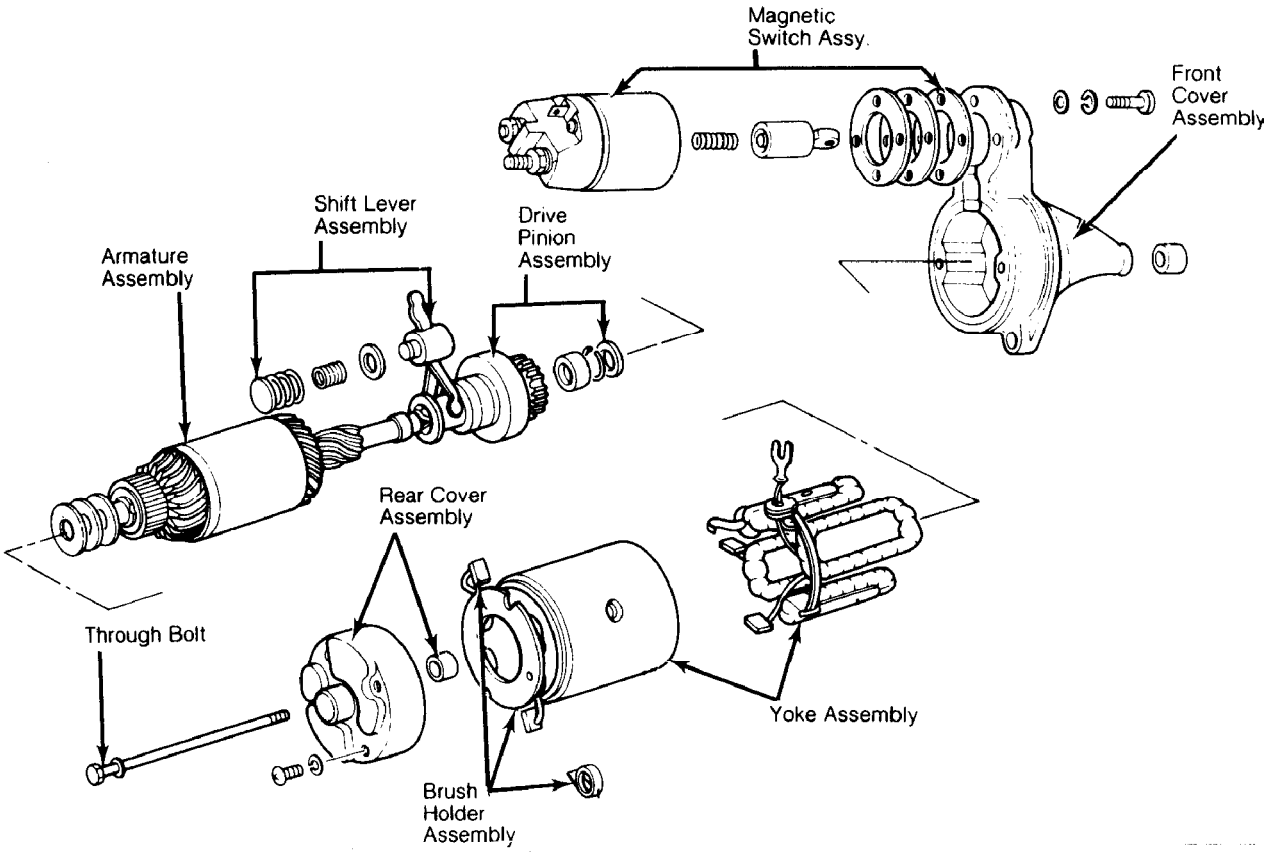

Fig. 5: Disassembled View of Typical Mitsubishi Conventional Starter

END OF ARTICLE

A/C SYSTEM GENERAL DIAGNOSTIC PROCEDURES
Article Text

Copyright © 1998 Mitchell Repair Information Company, LLC
Sunday, August 26, 2001 04:42PM

ARTICLE BEGINNING

1983-90 AIR CONDITIONING & HEAT
General Servicing Diagnostic Procedures

All Import Makes & Models

Diagnosis is an important first step in A/C system servicing. To save time and effort, systems should be carefully checked to identify the causes of poor performance. By using the following diagnostic charts, defective components or system damage can be quickly located. To identify problems that are specific to one system, refer to the repair section of this manual. The charts in this section apply to all systems.

ALTITUDE PRESSURE VARIATIONS

ALTITUDE PRESSURE VARIATIONS TABLE

Altitude (Ft. Above Sea Level)	Absolute Pressure of Atmosphere (psi)	Gauge Altitude Correction (1) (psi)
0	14.7	0
1000	14.2	-0.5
2000	13.7	-1.0
3000	13.2	-1.5
4000	12.7	-2.0
5000	12.2	-2.5
6000	11.7	-3.0
7000	11.3	-3.4
8000	10.9	-3.8
9000	10.5	-4.2
10,000	10.1	-4.6

(1) - Subtract correction shown from gauge readings.

ALTITUDE VACUUM VARIATIONS

ALTITUDE VACUUM VARIATIONS TABLE

Altitude (Ft. Above Sea Level)	Absolute Pressure of Atmosphere (psi)	Gauge Altitude Correction (1) (psi)
0	29.92	0
1000	28.92	+1.0
2000	27.82	+2.1
3000	26.82	+3.1
4000	25.82	+4.1

Copyright © 1998 Mitchell Repair Information Company, LLC
Sunday, August 26, 2001 04:42PM

5000	24.92	+5.0
6000	23.92	+6.0
7000	23.02	+6.9
8000	22.22	+7.7
9000	21.32	+8.6
10,000	20.52	+9.4

(1) - Add correction shown to gauge readings.

PREPARATION FOR TESTING

1) Attach Low and High pressure gauges.
2) Start engine and allow to warm up.
3) Set system to "COOL" and blower to "HIGH".
4) Open car doors and hood.
5) Run engine at fast idle for 2-3 minutes.

AIR CONDITIONING SYSTEM PERFORMANCE CHECK TABLE

PERFORM TESTS:	SHOULD BE:	IF:
Temperature Check		Temperature Check Is
* Switch to "LOW" blower. * Close doors. * Check outlet temperature.	35-45ø F	Too warm - Check control lever operation, heater water valve, cooling system and gauge readings.
Visual Check		Visual Check Shows:
* Compressor	Quiet, No Leaks	Noisy - Check belts, oil level, seals, gaskets, reed valves.
* Condenser	Free of Obstructions	Blocked - Clean off. Plugged - Flush or replace.
* Receiver-Drier	Dry & warm to touch	Frosty - Check for restriction, replace desiccant.
* Sight Glass	Clear or few bubbles	Bubbly, foamy or streaks - Check gauge readings.
* High Side Lines	Dry & warm to touch	Frosty or very hot - Check for restriction or overcharge.
* Low Side Lines	Dry & cool to touch	Frosty or warm - Check for restriction, low charge or bad valve.
* Expansion Valve	Dry	Frosty - Check for

Copyright © 1998 Mitchell Repair Information Company, LLC
Sunday, August 26, 2001 04:42PM

		moisture or restriction. Check sensing bulb.
* STV	Dry & cool to touch	Frosty or warm - Check gauge readings for valve malfunction.
* Evaporator	Dry & cold to touch	Freezing or warm - Check expansion valve, STV or thermo switch.
Gauge Readings		Gauge Readings are:
* High Side Gauge	See Pressure Chart	Above or below normal - See A/C Diagnosis.
* Low Side Gauge	See Pressure Chart	Above or below normal - See A/C Diagnosis.

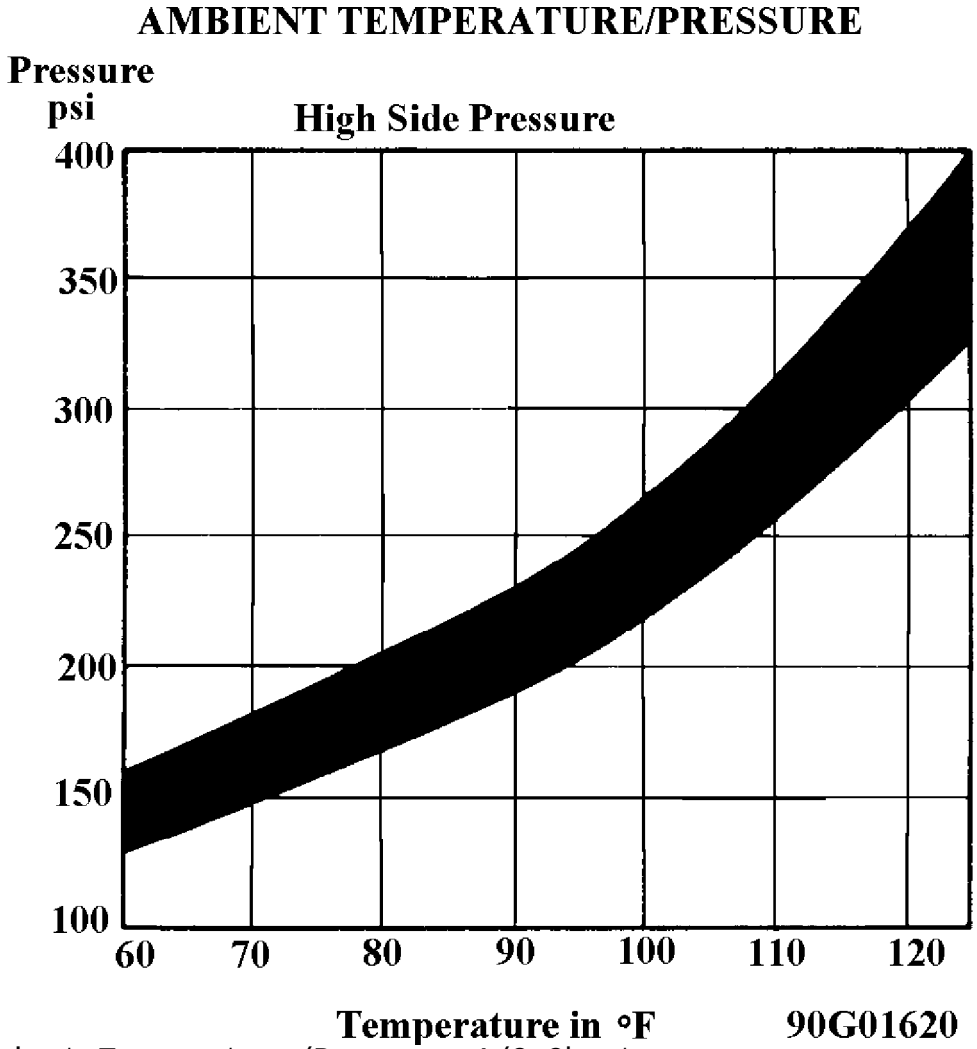

Fig. 1: Ambient Temperature/Pressure A/C Chart

Copyright © 1998 Mitchell Repair Information Company, LLC
Sunday, August 26, 2001 04:42PM

EVAPORATOR TEMPERATURE/PRESSURE

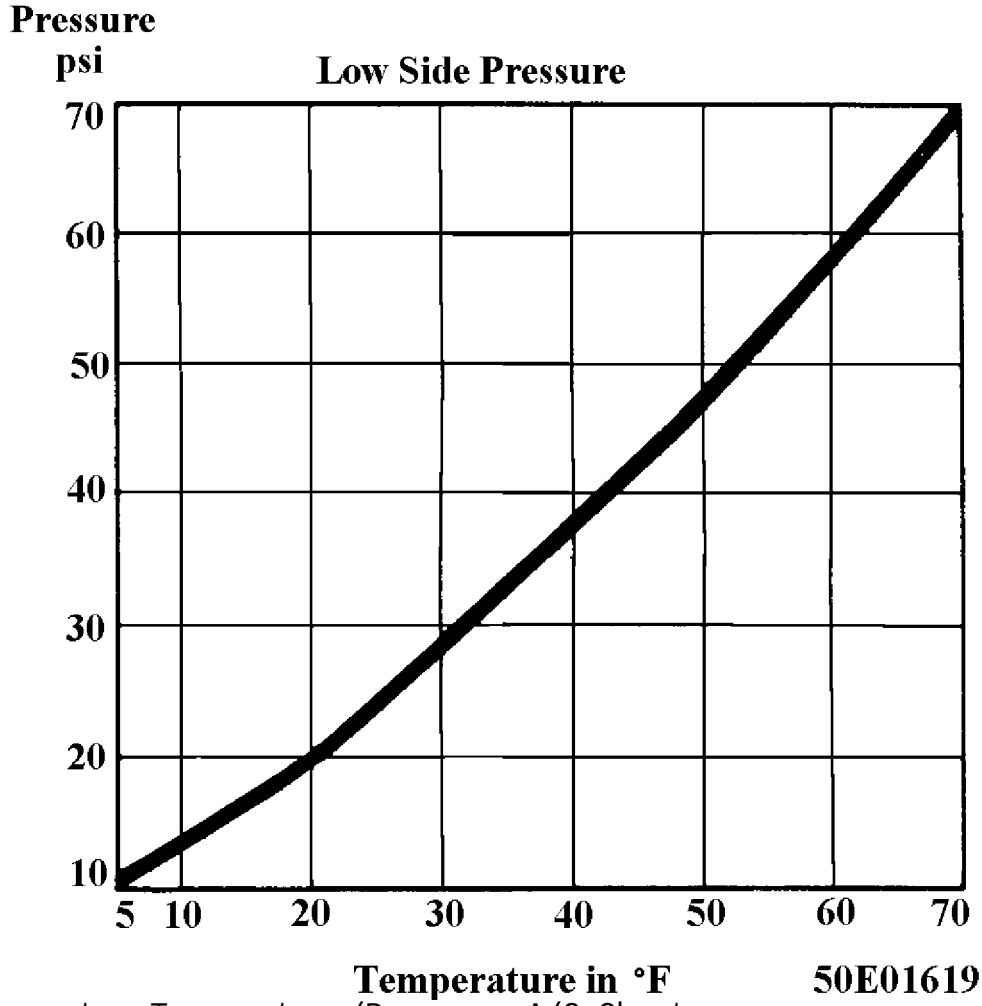

Fig. 2: Evaporator Temperature/Pressure A/C Chart

AIR CONDITIONING DIAGNOSIS WITH GAUGES FOR SYSTEMS WITH INSUFFICIENT OR NO COOLING TABLE

Low Side Gauge	High Side Gauge	Other Symptoms (1)	Diagnosis
NORMAL	NORMAL	No or few bubbles in sight glass. High side gauge may go high. Low side gauge does not fluctuate with compressor on/off cycle.	Some Air and Moisture in System
NORMAL	NORMAL	Cools okay in morning but not during hot part of day. Bubbles in sight glass. Discharge air warm when low side gauge drops into vacuum.	Excessive Moisture in System
NORMAL	NORMAL	Thermostatic switch system only - compressor cycles off	Defective Thermostatic

Copyright © 1998 Mitchell Repair Information Company, LLC
Sunday, August 26, 2001 04:42PM

		and on too rapidly.	Switch
NORMAL to HIGH	NORMAL	Cycling clutch systems only - compressor doesn't turn on soon enough. Discharge air becomes warm as low side pressure rises.	Misadjusted Thermostatic Switch or Defective Pressure Sensing Switch
LOW	LOW	Bubbles in sight glass. Outlet air slightly cool.	Low R-12 Charge
LOW	LOW	Sight glass clear. Outlet air very warm.	Excessively Low R-12 Charge
LOW	LOW	Outlet air slightly cool. Sweating or frost at expansion valve.	Expansion Valve Stuck Closed Screen Plugged or Sensing Bulb Malfunction
LOW	LOW	Outlet air slightly cool. High side line cool to touch. Sweating or frost on high side.	Restriction on High Side
LOW	HIGH	Evaporator outlet pipe cold. Low side goes into vacuum when blower is disconnected.	STV Stuck Open
HIGH	LOW	Evaporator outlet pipe warm. Outlet air warm.	STV Stuck Closed
HIGH	LOW	Noise from compressor.	Compressor Malfunction
HIGH	HIGH	Outlet air warm. Liquid line very hot. Bubbles in sight glass.	Compressor Malfunction or R-12 Overcharge
HIGH	HIGH	Outlet air slightly cool. Bubbles in sight glass.	Large Amount of Air and Moisture in System
HIGH	HIGH	Outlet air warm. Evaporator outlet sweating and frost.	Expansion Valve Stuck Open

(1) - If equipped with a low refrigerant charge protection system, compressor operation may have stopped.

END OF ARTICLE

A/C SYSTEM PRECAUTIONS
Article Text

Copyright © 1998 Mitchell Repair Information Company, LLC
Sunday, August 26, 2001 04:42PM

ARTICLE BEGINNING

AIR CONDITIONING & HEAT
A/C System Precautions

*** PLEASE READ THIS FIRST ***

CAUTION: When discharging air conditioning system, use only approved refrigerant recovery/recycling equipment. Make every attempt to avoid discharging refrigerant into the atmosphere.

BEFORE OPENING THE SYSTEM

Before disconnecting any lines or fittings, the system must be completely discharged using approved refrigerant recovery/recycling equipment.

DISCHARGING A/C SYSTEM

NOTE: Recent findings by the EPA indicate that R-11, R-12 and R-113 are harmful to the Earths' protective Ozone layer. Make every attempt possible, to avoid discharging R-11, R-12 or R-113 into the atmosphere.

1) Remove service valve caps and install gauges. For high side gauge hose, Adapter (D81L-19703-A) must be used to connect to high side service valve.
2) Place open end of center hose in garage exhaust outlet or in a well ventilated area. Slightly open low side gauge valve and let refrigerant escape slowly without loosing refrigerant oil.
3) When system is nearly discharged, using approved refrigerant recovery/recycling equipment, open high side gauge valve to release any pressure trapped in compressor. Close valves immediately after discharging to prevent entry of moisture.

DISCONNECTING LINES & FITTINGS

1) After system is discharged, using approved refrigerant recovery/recycling equipment, carefully clean entire area around coupling nut to prevent dirt entering system. Always use two wrenches to avoid twisting or distorting lines and fittings (hold fitting with one wrench while loosening coupling nut with second wrench).
2) Cap or plug all LINES and FITTINGS immediately to prevent entry of air and moisture into system. Do not remove these caps until connections are being made.

COMPONENT REPLACEMENT

When components are replaced, system oil level must be adjusted. Add refrigeration oil to replacement component. See

Copyright © 1998 Mitchell Repair Information Company, LLC
Sunday, August 26, 2001 04:42PM

Compressor oil Check article, as well as, Component Oil Replacement Quantities" chart under "A/C SYSTEM SPECS" article in this section.

USING R-12 REFRIGERANT - SAFETY PRECAUTIONS

1) Always work in a well-ventilated, clean area. Refrigerant (R-12) is heavier than oxygen, and will displace oxygen in a confined area. Always wear eye protection when working around air conditioning systems and R-12. The system's high pressure can cause severe injury to eyes and skin if a hose were to burst. R-12 evaporates quickly when exposed to atmosphere, freezing anything it contacts.

2) Use care when handling refrigerant containers. DO NOT drop or strike containers or expose refrigerant containers to excessive heat. Containers must never be heated more than 125øF (52øC). Never expose R-12 directly to open flame.

CAUTION: When R-12 is exposed to an open flame, drawn into a running engine, or detected with a Halide (propane) leak tester, poisonous phosgene gas is formed. Keep work areas ventilated and avoid running engines near work area.

USING INDIVIDUAL R-12 CANS

Disposable refrigerant cans (referred to as one pound cans) have a flat type seal or a screw type seal, and proper can tap must be used for each type. Be sure sealing gasket on can tap is in good condition. A proper safety can tap will prevent refrigerant from flowing back into open can, as tap has a one-way flow control.

NOTE: Recent findings by the EPA indicate that refrigerant is harmful to the Earth's protective Ozone layer. When discharging refrigerant avoid allowing refrigerant to enter the atmosphere. Refrigerant recovery system should be used when discharging the system.

MULTI-CAN DISPENSING VALVES

A multi-can dispensing valve allows attachment of several cans of refrigerant, and is a good substitute when a bulk container is not available. Cans are installed onto each leg of multi-can dispensing valve in the same manner as the individual cans, and each leg has its own can tap.

CAN TAP INSTALLATION FLAT TYPE SEAL CANS

On cam-lock or one-piece can taps, first turn the handle outward to the fully open position. Securely engage locking lugs over the can flange, and lock them in place by turning cam lock or locking nut. Screw tap assembly into adapter so sealing gasket is fully seated against the can top. Turn tap inward to pierce the can and close the tap. DO NOT open tap until ready to purge the service hose or dispense

Copyright © 1998 Mitchell Repair Information Company, LLC
Sunday, August 26, 2001 04:42PM

refrigerant into the system.

On 2-piece can taps, be certain tap handle is turned fully inward to the closed position. Check that locking base is turned to its outer limit. Securely engage locking lugs over the can flange. Turn entire tap assembly (without disturbing the closed setting) downward into the locking base to pierce the can. DO NOT open tap until ready to dispense into system.

SCREW TYPE SEAL CANS

Ensure can tap is fully closed. Screw refrigerant can into can tap fitting until tight. This will pierce the can. Connect tap to center hose on manifold gauge set. DO NOT open tap until ready to dispense R-12 into system.

WARNING: DO NOT open high side hand valve while air conditioning system is in operation. This high pressure could rupture can or fitting at safety can valve, resulting in damage and personal injury.

CONNECTING LINES & FITTINGS

A new "O" ring should be used in all instances when connecting lines and fittings (dip "O" ring in clean refrigeration oil and make certain it is not twisted during installation). Always use two wrenches to avoid twisting or distorting lines and fittings, tighten coupling nuts securely.

PLACING SYSTEM IN OPERATION

After component replacement and/or system servicing has been completed and all connections have been made, proceed as follows:

1) Evacuate the system using a vacuum pump.
2) Charge the system with new R-12 (refrigerant) according to each individual vehicle as outlined in the GENERAL COOLING SYSTEM SERVICING article. Also see Refrigerant Capacity in this Section.
3) Leak test the system, with particular attention to all new connections and components.
4) Make a performance test of the system. Never assume that a recharging has automatically corrected a problem.

COMPRESSOR REMOVAL INFORMATION - ISOLATION METHOD

On systems which have compressors equipped with stem-type service valves (Tecumseh), it is possible to isolate the compressor for removal.

Isolating
Turn both high and low pressure manual valves to extreme

Copyright © 1998 Mitchell Repair Information Company, LLC
Sunday, August 26, 2001 04:42PM

clockwise (front seat) position. Loosen cap on high pressure manual valve connection to compressor and allow gas to escape until compressor is relieved of pressure.

COMPRESSOR REMOVAL INFORMATION - DISCHARGE METHOD

This procedure is to be used on vehicles which have compressor equipped with Schrader service valves. In these cases, the compressor cannot be isolated and the system must be discharged, using approved refrigerant recovery/recycling equipment, prior to compressor removal.

END OF ARTICLE

TRANSMISSION REMOVAL & INSTALLATION - A/T
Article Text

Copyright © 1998 Mitchell Repair Information Company, LLC
Sunday, August 26, 2001 04:50PM

ARTICLE BEGINNING

Automatic Transmission Removal
1983 MAZDA

PICKUP

REMOVAL

1) Raise vehicle and support with safety stands. Disconnect battery tube. Remove shift rod from right side of transmission case. Remove bolts and nuts attaching exhaust pipe and catalytic converter.
2) Remove solenoid and inhibitor switch connector. Remove speedometer cable. Remove drive shaft. Fit main shaft holder (49 0259 440) into main shaft in transmission case to prevent oil leak. Remove starter and gusset plates.
3) Remove lower covers from front and rear of engine. Remove converter housing bolts.Remove vacuum pipe clip. Remove bolt, pipe clip and installation blot from left side of transmission.
4) Remove connector bolts and washers from left side of transmission. Remove engine hanger. Remove clip and bolt from top of converter housing. Remove oil filter pipe and level gauge.
5) Securely support transmission with hydraulic jack. Remove transmission mounts. Cover oil filter pipe and connector bolt mounting hole on transmission case.
6) Insert screwdriver through torque converter installation hole in drive plate. Press against torque converter to prevent it form separating when transmission is removed. Remove transmission-to-engine bolts and slowly lower transmission out of vehicle.

INSTALLATION

Reverse removal procedure to install transmission. After transmission is installed, rotate cranshaft several times to be sure that transmission rotates freely without binding.

GLC (RWD), 626 & RX-7

REMOVAL

1) Disconnect negative battery cable. On RX-7, remove air cleaner, converter housing upper and side covers, and top bolts attaching transmission to engine. On models so equipped, disengage torsion shaft from accelerator linkage. Raise vehicle and support with safety stands
2) Drain fluids from transmission. Remove drive shaft. Use output shaft to prevent oil leakage from rear of transmission. Remove any exhaust pipe from manifold. Disconnect shift linkage from manual shaft on transmission
3) Disconnect all electrical and vacuum leads from transmission. Disconnect speedometer cable. Remove oil filter tube

Copyright © 1998 Mitchell Repair Information Company, LLC
Sunday, August 26, 2001 04:50PM

from transmission, then disconnect both oil cooler pipes.

4) Disconnect governor tube from converter housing and transmission case (if equipped). Support transmission with wood block between oil pan and transmission jack.

5) Remove converter inspection plates. Mark converter and flywheel for realignment reference during installation. Remove torque converter -to-flywheel attachment bolts.

6) Remove rear mount and crossmember mounting bolts. Remove starter (lower transmission as needed to gain access to starter bolts). Remove transmission-to-engine bolts and slowly lower transmission out of vehicle.

INSTALLATION

Reverse removal procedure to install transmission, noting the following: When installing torque converter, be sure that notch in converter lines up with notch in oil pump. When bolting converter to flywheel, be sure to align mark made during removal to ensure proper alignment. After transmission is installed, rotate crankshaf several times to be sure that transmission rotates freely without binding.

GLC (FWD)

REMOVAL

1) Drain all fluid from transaxle assembly (oil pan must be removed to completely drain transaxle as drain plug along will not drain all the fluid). Disconnect negative cable from battery. Disconnect speedometer cable , inhibitor switch connector, neutral switch connector and kickdown solenoid connector.

2) Remove graphic diaphragm lines. Raise front end of vehicle and support. Remove wheel, disconnect lower control arm ball joints and pull drive shaft out of transaxle. Use care when removing drive shaft to avoid stressing outer constant velocity joint to its limit, as this will damage the joint. Remove engine undercover.

3) Attach engine support to engine hanger and support engine. Remove crossmember. Disconnect oil hose from oil pipe and plug ends of hose and pipe. Remove rear transmission mount. Remove starter, end cover and torque converter to-drive plate retaining bolts.

4) Support transaxle with jack and remove transaxle-to-engine retaining bolts. Lower transaxle assembly out of vehicle. Use care when removing transaxle so that torque converter does not fall out.

INSTALLATION

Reverse removal procedure to install

END OF ARTICLE

TRANSMISSION SERVICING - A/T
Article Text

Copyright © 1998 Mitchell Repair Information Company, LLC
Sunday, August 26, 2001 04:51PM

ARTICLE BEGINNING

1983 Automatic Transmission Servicing
MAZDA

RX7

IDENTIFICATION

TRANSMISSION CODES

Application	Codes
RX7	3N71B

LUBRICATION

SERVICE INTERVALS

Inspect automatic transmission fluid level every 7,500 miles or 8 months.

FLUID LEVEL

1) Check fluid with vehicle on level floor. Apply parking brake firmly and run engine approximately 2 minutes at 1200 RPM.
2) With engine running at normal idle, move selector lever through all gears, pausing at each gear to allow for engagement.
3) Return to "P" position and leave engine running. Wipe area clean around dipstick filler tube and remove dipstick.
4) Wipe dipstick clean, reinsert, withdraw, and note reading. If between "L" and "F" marks, level is satisfactory. If not, add fluid.

FLUID TYPE

Automatic Transmission Fluid (ATF)
Type "F"

FLUID CAPACITY

6.6 qts. (6.2L)

DRAINING & REFILLING

Transmission
1) If draining and refilling is required for any operation, remove pan bolts and allow fluid to drain. Remove pan and gasket, (discard gasket).
2) Clean pan thoroughly and reinstall new gasket, tightening

Copyright © 1998 Mitchell Repair Information Company, LLC
Sunday, August 26, 2001 04:51PM

pan bolts to 36-60 INCH lbs. (4-9 N.m). Add fluid, make sure not to overfill.

Transaxle

1) Drain oil by removing drain plug on bottom of differential. Remove speedometer driven gear and oil pan. Clean oil pan. Replace oil pan and speedometer driven gear.

2) Replace oil through oil filler tube. Place selector lever in "P", warm engine, and check oil level. Oil level must not be higher than "F" on gauge.

ADJUSTMENT

BRAKE BAND

1) Loosen servo piston stem lock nut and back off a few turns.

2) Using a torque wrench, tighten servo piston stem to 108-132 INCH lbs. (12-15 N.m), then back off piston stem 2 turns.

3) Hold piston stem in this position and tighten lock nut to 132-348 INCH lbs. (15-39 N.m) on RWD models.

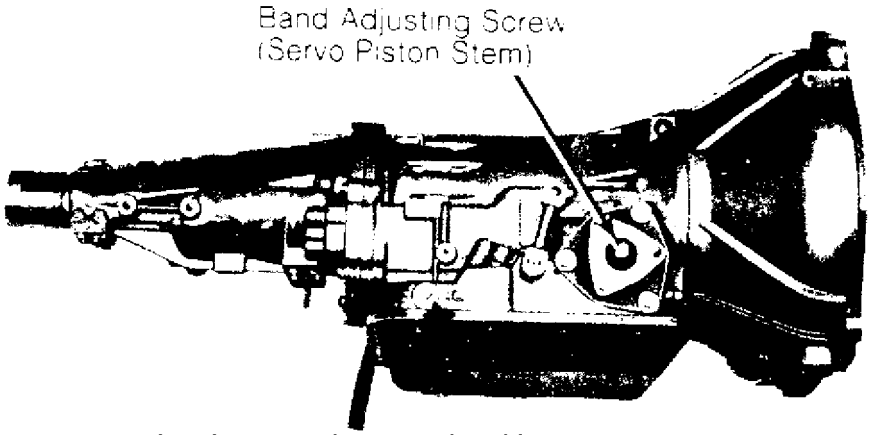

Fig. 1: RX7 Transmission Brake Band Adjustment

KICKDOWN SWITCH & DOWNSHIFT SOLENOID

1) Depress accelerator pedal to limit. Near wide open throttle, click should be heard from solenoid. Switch must operate at or after 7/8 of pedal travel.

2) If not, loosen switch retaining nut and adjust switch to engage when pedal is at 7/8 of its full travel, tighten retaining nut and check solenoid.

Copyright © 1998 Mitchell Repair Information Company, LLC
Sunday, August 26, 2001 04:51PM

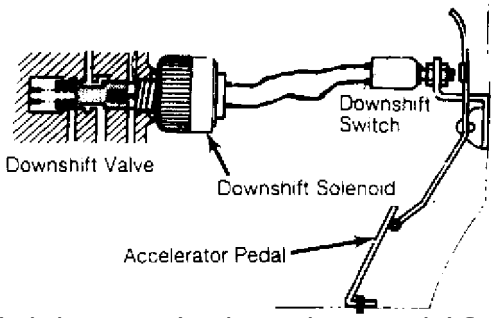

Fig. 2: Kickdown Switch and Downshift Solenoid

SHIFT LINKAGE

NOTE: Before linkage is adjusted, be sure engine idle is properly set.

RX7

Remove boot plate. Place selector lever in "P" position. Loosen selector lever plate bolt. Place transmission in "P" position. Tighten selector lever plate bolt and replace boot.

SELECTOR LEVER HANDLE ADJUSTMENT

Loosen and back off lock nut. Screw handle fully down until no play exists in the push button. Unscrew handle 1 complete turn at a time until smooth shifting operation is obtained. Tighten lock nut.

NEUTRAL SAFETY SWITCH

1) After checking and adjusting shift linkage, place the transmission lever in the "N" position.
2) Loosen safety switch retaining bolts. Remove screw from alignment pin hole at bottom of switch.
3) Rotate switch and insert a .078" (2 mm) diameter alignment pin through the alignment hole and into hole of internal rotor. Tighten switch retaining bolts and remove alignment pin.
4) Reinstall alignment pin hole screw. Check operation of switch. The engine should only start in "N" or "P" position.

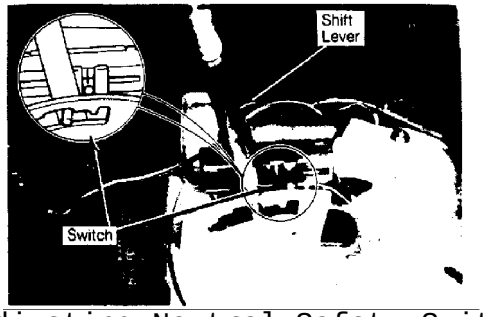

Fig. 3: Adjusting Neutral Safety Switch On RX7 Transmissions

TRANSMISSION SERVICING - A/T
Article Text (p. 4)

Copyright © 1998 Mitchell Repair Information Company, LLC
Sunday, August 26, 2001 04:51PM

END OF ARTICLE

BRAKE SYSTEM
Article Text

Copyright © 1998 Mitchell Repair Information Company, LLC
Sunday, August 26, 2001 04:54PM

ARTICLE BEGINNING

1983 Brakes
MAZDA

GLC Wagon, Pickups, RX7

DESCRIPTION

Brake system is hydraulically-operated, using a tandem master cylinder and power brake unit. Front brakes are floating caliper disc. Rear brakes on most models are leading/trailing drums.

Floating caliper rear disc brakes are available on RX7 as an option. Proportioning valves are used on most models to prevent premature lockup of rear wheels.

ADJUSTMENT

REAR DRUM BRAKE SHOES

GLC Wagon, RX7 & Pickups

1) Raise and support rear of vehicle. Release parking brake. Remove rear wheel. Through the hole in the brake drum of the GLC Wagon or on the backing plate of all others, remove the star wheel plug. Insert a flat-tipped screwdriver, and move the star wheel forward until the wheel is locked. See Fig. 1.

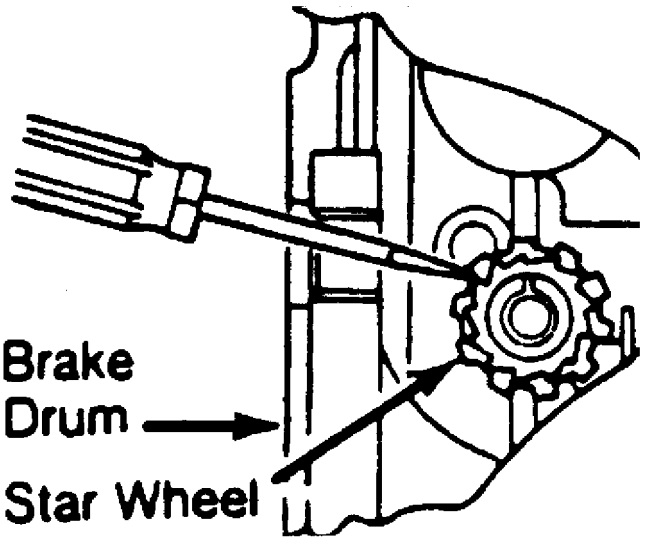

Fig. 1: Adjusting Rear Brake Shoe-to-Drum Position

2) On all backing plates, remove the pawl lever hole plug. Insert a flat-tipped screwdriver through hole. Push on the pawl lever self-adjuster, so the star wheel may be moved in the reverse direction.

3) Back off the star wheel about 3 or 4 notches, so the

Copyright © 1998 Mitchell Repair Information Company, LLC
Sunday, August 26, 2001 04:54PM

wheel turns freely. Repeat procedure for opposite side. Adjust the parking brake. Install plugs in the adjusting holes.

BRAKE PEDAL HEIGHT ADJUSTMENT

Application	In. (mm)
GLC Wagon	
Man. Trans.	7.5-7.7 (190-195)
Auto. Trans.	7.7-7.9 (195-200)
RX7	7.5-7.7 (190-195)
B2000 & B2200	8.1-8.3 (205-210)

PARKING BRAKE

1) With service brakes properly adjusted, raise and support the rear of the vehicle. Remove parking brake lever boot or console, if necessary. Release the brake lever. Turn the adjusting screw or nut to obtain specified clearance. On Pickups, turn adjusting nut at equalizer under the vehicle.
2) The lever should be pulled with a force of 22 lbs. to obtain a stroke of 3-7 notches on GLC Wagon, 5-9 notches on GLC, 6-8 notches on RX7, 7-9 notches on 626, and 5-10 notches on Pickups.
3) Reinstall brake lever boot or console. Remove supports and lower vehicle. On all models, operate parking brake several times and make sure rear wheels rotate freely.

NOTE: Insure that the rear brakes are not dragging and the parking brake warning light is activated when the lever is pulled 1 notch.

BRAKE WARNING LIGHT

All Models (If Equipped)
1) Light indicates parking brake is engaged and also warns of low fluid level. With engine running, light should glow when parking brake lever is pulled 1 notch and go off when lever is fully released.
2) To check warning light operation with engine running, release parking brake lever and ensure light is off. Raise master cylinder reservoir cap and light should glow. If not, check switch and wire connector.

REMOVAL & INSTALLATION

FRONT DISC BRAKE PADS

Removal
1) Raise and support the front of the vehicle. Remove the wheels. Detach brake hose attachment from shock absorber, if necessary.

Copyright © 1998 Mitchell Repair Information Company, LLC
Sunday, August 26, 2001 04:54PM

2) On RX7 remove lower caliper guide pin and pivot caliper body up out of way. On GLC Wagon and Pickups remove locking clips and stopper plates.
3) Remove caliper body and hang from frame with wire. Do not disconnect hydraulic lines. On all models, remove anti-rattle springs (clips), pads, and shims, if equipped.

Installation
1) To install, reverse removal procedure. Before mounting caliper, loosen bleed screw, and seat piston. Tighten bleed screw.
2) After pad installation, depress brake pedal several times to seat pads. Bleed hydraulic system, if required.

NOTE: Grease pad mounting support, caliper contact area, and shims with special grease (NLGI No. 2 or equivalent).

REAR DISC BRAKE PADS

Removal (RX7)
1) Raise and support the rear of the vehicle. Remove wheel. Disconnect parking brake cable from caliper. Remove lower caliper attaching bolt.
2) Lift the lower side of caliper. Remove anti-rattle spring. Remove disc brake pads and shims.

Installation
1) Using brake piston wrench (49 FA18 602), turn piston clockwise until piston is inserted into caliper fully.
2) Position piston so that dowel on pad will seat in piston stopper groove. To complete installation, reverse removal procedure.

FRONT DISC BRAKE CALIPER

Removal
1) Raise and support the front of the vehicle. Remove the wheel. Disconnect and plug the fluid line at caliper. On RX7, remove lower caliper bolt, lift the caliper body, and remove by sliding toward the inside of the vehicle.
2) On GLC Wagon and Pickups, remove locking clips, stopper plates, and anti-rattle spring. Lift off caliper. Remove disc pads as previously described.

Installation
To install, reverse removal procedure and bleed hydraulic system.

REAR BRAKE CALIPER

Removal (RX7)
1) Raise and support the rear of the vehicle. Remove the wheel. Disconnect parking brake cable from caliper.
2) Remove caliper attaching bolt (lower side). Lift up

Copyright © 1998 Mitchell Repair Information Company, LLC
Sunday, August 26, 2001 04:54PM

caliper. Slide the caliper toward the inside of the vehicle and remove the caliper. Disconnect the brake hose from the caliper.

Installation

To install caliper, reverse removal procedure and bleed hydraulic system.

FRONT DISC BRAKE ROTOR

Removal (All Models)

1) With caliper assembly removed, remove wheel hub grease cap, cotter pin, lock plate and ring adjusting lock nut.

2) Remove thrust washer and outer bearing from hub. Slide hub and rotor assembly from spindle. On Pickups, place wheel in a soft-jawed vise, make mating marks, remove hub-to-rotor bolts, and separate rotor from hub.

Installation

To install, reverse removal procedure, and tighten hub-to-rotor bolts evenly. Adjust wheel bearings. See Wheel Bearing Adjustment in SUSPENSION section.

REAR BRAKE DRUM

Removal (All Models)

Raise and support the rear of the vehicle. Release parking brake. Remove the wheel. On Pickups, remove brake drum retaining screws and insert into tapped holes of brake drum. Turn screws evenly and force brake drum off flange.

Installation (All Models)

To install, reverse removal procedure. Tighten retaining screws evenly (if equipped). On GLC & 626, adjust wheel bearings. See Wheel Bearing Adjustment in SUSPENSION section.

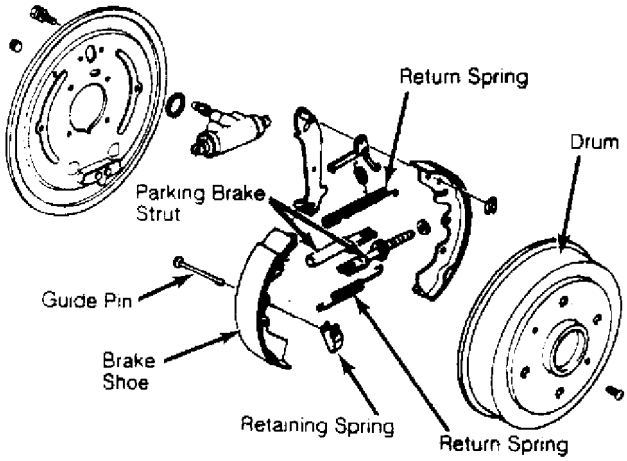

Fig. 2: Exploded View of GLC Wagon Rear Brakes
Other models are similar.

Copyright © 1998 Mitchell Repair Information Company, LLC
Sunday, August 26, 2001 04:54PM

REAR BRAKE SHOES

Removal (All Models)
1) With brake drum removed, remove brake shoe return springs, retaining springs and guide pins. Remove brake shoes.
2) Remove parking brake strut and disconnect parking brake cable from operating lever of secondary shoe.

Installation
1) Lubricate adjusting screw threads and contact surfaces of shoes and backing plate with brake grease. Install parking brake operating lever to secondary shoe and secure with clip. Engage operating lever with parking brake cable.
2) Position operating strut between slots of shoes. Mount assembly to backing plate so slots in shoes are toward adjusting screws. Install return springs and retainer springs.

MASTER CYLINDER

Removal
1) Disconnect fluid level sensor coupler, if equipped. Disconnect and plug hydraulic lines at master cylinder to prevent entry of dirt and loss of fluid.
2) Remove nuts attaching master cylinder to firewall or power brake unit and remove master cylinder from vehicle. On RX7, remove proportioning valve by-pass bolt.

Installation
To install, reverse removal procedure and bleed hydraulic system.

POWER BRAKE UNIT

Removal
1) Remove master cylinder from power brake unit before removing power brake unit. Disconnect vacuum line at power brake unit.
2) From inside vehicle, remove cotter pin and clevis pin attaching push rod to brake pedal, and separate.
3) Remove nuts retaining power unit to firewall. Remove power brake unit and master cylinder as an assembly. Separate master cylinder from power brake unit.

Installation
To install, reverse removal procedure and bleed hydraulic system.

OVERHAUL

FRONT DISC BRAKE CALIPER

Disassembly
1) Thoroughly clean exterior of caliper and remove retainer

Copyright © 1998 Mitchell Repair Information Company, LLC
Sunday, August 26, 2001 04:54PM

and dust boot. Place a piece of wood in front of piston.

2) Apply compressed air to fluid inlet and remove piston. Tap caliper with plastic hammer, if required. Remove piston seal without damaging caliper bore.

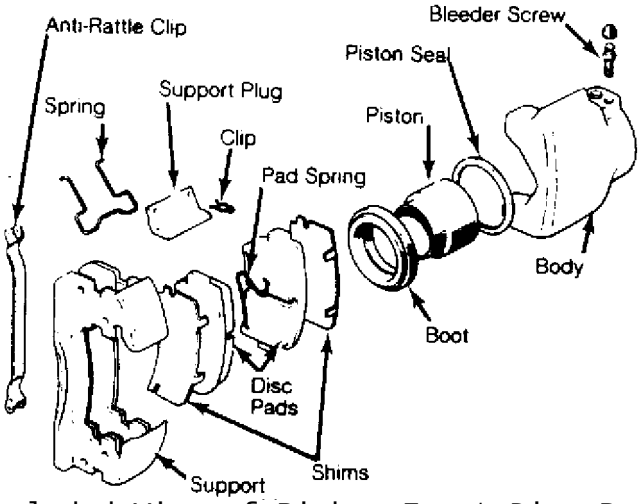

Fig. 3: Exploded View of Pickup Front Disc Brake Caliper

Cleaning & Inspection

1) Wash all parts in alcohol or brake fluid and air dry. Inspect cylinder bore and piston for scoring, scratches or rust. Replace defective parts.

2) Minor damage may be removed with crocus cloth. Always replace dust boot and piston seal when caliper is disassembled.

Reassembly

1) Apply clean brake fluid to cylinder bore, piston and piston seal. Seat piston seal in caliper bore.

2) Install piston carefully into cylinder bore and install dust boot and retainer.

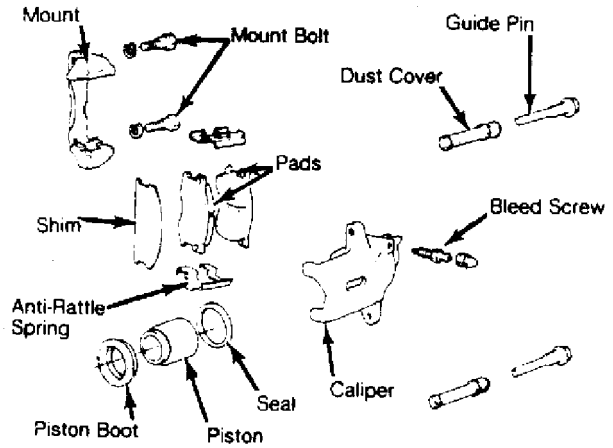

Fig. 4: Exploded View of RX7 Front Brake Caliper

REAR DISC BRAKE CALIPER

Copyright © 1998 Mitchell Repair Information Company, LLC
Sunday, August 26, 2001 04:54PM

Disassembly (RX7)

1) Remove dust boot retainer and boot. Turn piston counterclockwise with disc brake piston wrench (49 FA18 602), and screw out piston. Remove piston seal.

2) Remove boot retainer. Slip off boot. Remove snap ring. Compress conical spring in caliper with spring compressor (49 FA18 601), valve spring lifter arm (49 0636 100A), and removing plate (49 E301 144).

3) Remove parking brake crank, torsion spring and strut. Remove adjusting bolt and conical spring assembly. Press out needle roller bearings.

Inspection

1) Clean all parts in brake fluid or alcohol. Air dry parts. Inspect caliper bore for scratches, scoring or rust. Minor damage can be removed by polishing with crocus cloth.

CAUTION: Never use gasoline or kerosene when cleaning caliper parts.

2) Inspect needle roller bearing, strut, adjusting bolt, and parking brake crank for corrosion, wear or damage. Check torsion spring and conical spring for corrosion, weakness or damage.

3) Check piston and sleeve nut for excessive play. It should be within .012-.020" (.3-.5 mm).

Reassembly

1) Assemble the caliper in the reverse order of disassembly. Use new piston and dust seals. Three kinds of grease contained in seal kit must be used.

2) White grease is for caliper slide bolts and mounting bolts. Orange grease is for bearings, adjusting bolt, strut and piston boot. Pink grease is for piston seal.

3) Lubricate the piston and caliper bore with clean brake fluid. Press in needle roller bearing so that arrow on bearing faces outward.

4) Assemble conical spring and adjusting bolt. See Fig. 5. Install adjusting bolt assembly, strut and torsion spring in the caliper. Install piston using disc brake wrench, as described under Disc Brake Pad Installation.

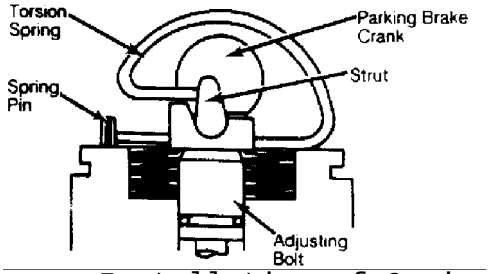

Fig. 5: Proper Installation of Conical Spring and Adjusting Bolt Apply orange grease, supplied in seal kit, to adjusting bolt.

Copyright © 1998 Mitchell Repair Information Company, LLC
Sunday, August 26, 2001 04:54PM

WHEEL CYLINDERS

Disassembly

Remove dust boots. Remove piston assemblies by pressing on cylinder cup to force out filling blocks and return spring.

Cleaning & Inspection

1) Clean all parts in alcohol or brake fluid. Check cylinder bore and pistons for scores, roughness or wear.

2) Check clearance between cylinder bore and pistons. Replace if clearance exceeds .006" (.15 mm). Check cups for deformation. Replace as necessary.

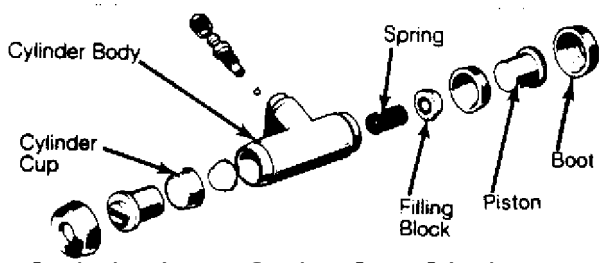

Fig. 6: Exploded View of Wheel Cylinder
Flat side of cylinder cups face outward.

Reassembly

1) Reverse disassembly procedure. Coat all parts with clean brake fluid before reassembly.

2) When installing cylinder cups, make sure flat side of cup faces outward.

MASTER CYLINDER

Disassembly

1) Thoroughly clean outside of master cylinder, and pour out any remaining brake fluid. If equipped, remove reservoir and dust boot. Depress primary piston assembly. See Fig. 7.

2) From rear of cylinder bore, remove retaining ring , washer, primary piston assembly, and return spring. Remove stopper bolt and secondary piston by blowing compressed air through the outlet port. See Fig. 8.

3) Carefully withdraw secondary piston assembly and return spring. Remove fittings, check valves, and springs.

Copyright © 1998 Mitchell Repair Information Company, LLC
Sunday, August 26, 2001 04:54PM

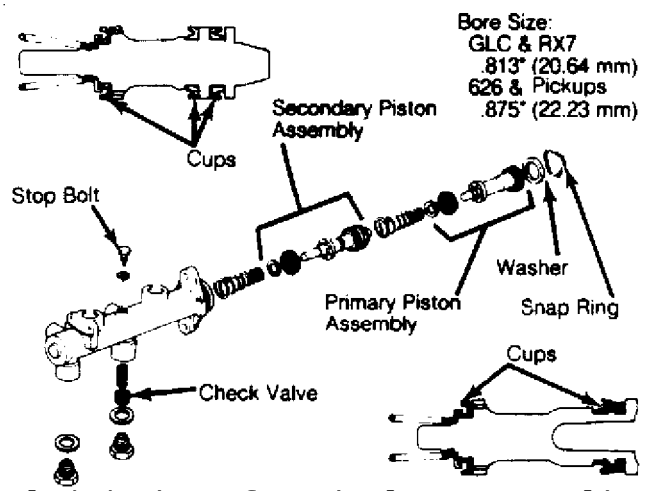

Fig. 7: Exploded View of Typical Master Cylinder
Some models may vary slightly.

Cleaning & Inspection

1) Clean all parts in alcohol or brake fluid. Check all parts for scoring, roughness or wear. Check piston-to-cylinder clearance.

2) If clearance exceeds .006" (.15 mm), replace parts as necessary. Remove all foreign matter from internal passages and recesses with compressed air.

3) Check cylinder cups for deformation and replace as required.

Reassembly

1) Reverse disassembly procedure. Coat all parts with clean brake fluid before reassembly. Use new gaskets at all hydraulic unions.

2) When assembled, make sure piston cups do not cover compensating ports. Make sure valve with hole in center, faces front side outlet hole.

POWER BRAKE UNIT

NOTE: Power brake units vary slightly between model applications. The following general overhaul procedures can be used if attention is paid to specific order of components.

Disassembly

1) Remove master cylinder and check valve from power unit. Place power unit in a vise with push rod up.

2) Scribe alignment marks on front and rear shells to assure reassembly in original position. Remove clevis, lock nut, and dust boot from rear shell.

CAUTION: Separate front and rear shells carefully. Spring tension may cause rear shell to release quickly.

Copyright © 1998 Mitchell Repair Information Company, LLC
Sunday, August 26, 2001 04:54PM

3) Attach suitable tool to rear shell mounting studs. Press down on tool while rotating it clockwise to unlock rear shell.

4) Lift rear shell assembly from power unit, remove air silencer retainer, and separate diaphragm from power piston assembly. Remove valve rod with plunger assembly from rear shell.

5) Remove lock plate and press the valve rod in to remove the valve retainer key. Remove valve rod and plunger assembly. Remove air silencer and filter.

NOTE: Service the valve rod plungers as an assembly.

6) Remove retainer, bearing, and rear seal.

NOTE: Never remove the rear seal from the rear shell unless seal is defective and a new one is available.

7) Remove the push rod, front seal, and the support plate.

Cleaning & Inspection

1) Clean all parts and blow dry with compressed air. Inspect all rubber parts for cuts, nicks, deterioration or other damage.

2) Check power piston for cracks, distortion, chipping, and damaged seats. Inspect front and rear shells for scratches, scores, pits, dents or other damage. Replace any defective parts.

Reassembly

1) Reverse disassembly procedure. Apply silicone grease to parts before reassembly. When assembling rear shell to front shell, make sure index marks are aligned.

2) Before installing master cylinder to power unit, measure clearance between primary piston and power unit push rod. Clearance on RX7 & GLC Wagon should be .004-.012" (.1-.3 mm).

3) On all other models, clearance should be .004-.020" (.1-.5 mm). If clearance is not to specifications, correct by adjusting push rod length.

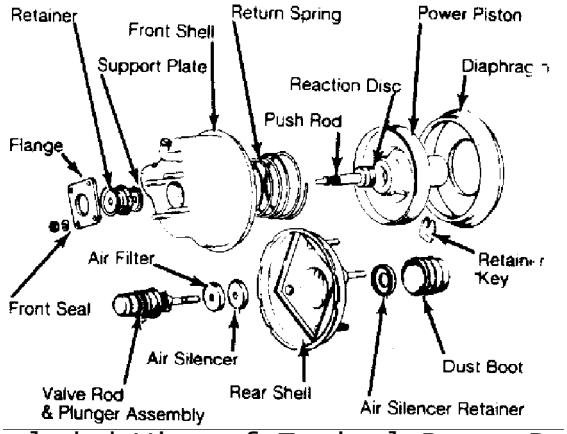

Fig. 8: Exploded View of Typical Power Brake Unit
Some models may vary slightly.

BRAKE SYSTEM
Article Text (p. 11)

Copyright © 1998 Mitchell Repair Information Company, LLC
Sunday, August 26, 2001 04:54PM

TORQUE SPECIFICATIONS

TORQUE SPECIFICATIONS TABLE

Application	Ft. Lbs. (N.m)
Caliper Mounting Bracket	
Pickups	40-47 (55-65)
GLC Wagon	33-40 (45-55)
Caliper Guide Pin	33-40 (45-55)

DISC SPECIFICATIONS

DISC BRAKE ROTOR SPECIFICATIONS TABLE

Application	In. (mm)
GLC Wagon	
Disc. Diameter	9.02 (229)
Lateral Runout	.002 (.06)
Parallelism	
Original Thickness	.512 (13)
Min. Refinish Thickness	
Discard Thickness	.472 (12)
RX7	
Disc. Diameter	
Front / Rear	
Lateral Runout	
Front / Rear	.004 (.10)
Parallelism	
Original Thickness	
Front	.709 (18)
Rear	.394 (10)
Min. Refinish Thickness	
Discard Thickness	
Front	.669 (17)
Rear	.354 (9)
B2000	
Disc. Diameter	10.08 (256)
Lateral Runout	.004 (.10)
Parallelism	
Original Thickness	.472 (12)
Min. Refinish Thickness	
Discard Thickness	.433 (11)
B2200	
Disc. Diameter	10.08 (256)
Lateral Runout	.004 (.10)
Parallelism	

Copyright © 1998 Mitchell Repair Information Company, LLC
Sunday, August 26, 2001 04:54PM

Original Thickness	.787 (20)
Min. Refinish Thickness	
Discard Thickness	.748 (19)

DRUM SPECIFICATIONS

DRUM BRAKE SPECIFICATIONS TABLE

Application	In. (mm)
Mazda	
GLC Wagon	
Drum Diameter	7.87 (200)
Drum Width	
Max. Drum Refinish Diam.	7.91 (201)
Wheel Cyl. Diameter	.750 (19.0)
Master Cyl. Diameter	.8125 (20.6)
RX7	
Drum Diameter	7.87 (200)
Drum Width	
Max. Drum Refinish Diam.	7.91 (201)
Wheel Cyl. Diameter	.750 (19.0)
Master Cyl. Diameter	.8125 (22.2)
B2000 & B2200	
Drum Diameter	10.23 (260)
Drum Width	
Max. Drum Refinish Diam.	10.27 (261)
Wheel Cyl. Diameter	.875 (22.2)
Master Cyl. Diameter	.875 (22.2)

END OF ARTICLE

1.1L ROTARY
Article Text

Copyright © 1998 Mitchell Repair Information Company, LLC
Sunday, August 26, 2001 04:57PM

ARTICLE BEGINNING

1983 ENGINES
Mazda 1.1L Rotary

RX7

ENGINE CODING

ENGINE IDENTIFICATION

Engine identification number is stamped on front engine housing behind the distributor.

ENGINE IDENTIFICATION CODES TABLE

Application	Engine Code
RX7	
1.1L Rotary Engine	12A

ENGINE

REMOVAL & INSTALLATION

Removal

1) Remove hood and disconnect battery ground cable. Drain engine oil and coolant. Remove engine under cover.

2) Disconnect following electrical wires: Primary and secondary ignition wires at coils, pick-up coil wiring connections, condenser lead, oil level sensor lead, temperature sensor and oil thermo sensor (except California vehicles).

Copyright © 1998 Mitchell Repair Information Company, LLC
Sunday, August 26, 2001 04:57PM

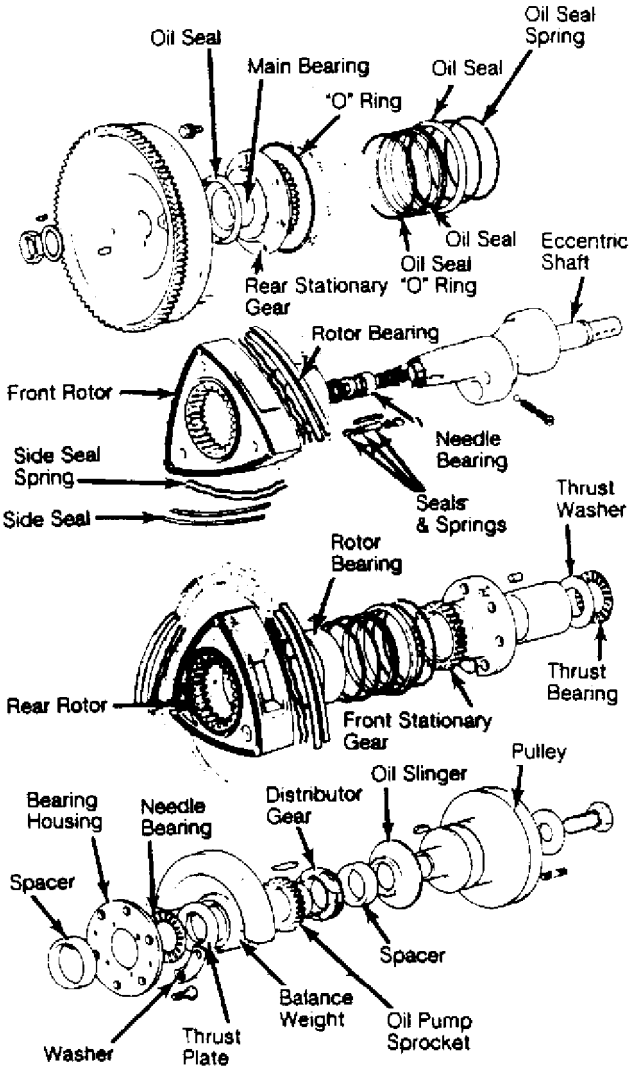

Fig. 1: Exploded View of Rotors & Eccentric Shaft Assembly

3) Remove air cleaner assembly. Disconnect the following tubes and hoses: Oil hoses at cooler, radiator hoses, automatic transmission cooler lines (if equipped), heater hoses, fuel supply and return lines, vacuum and evaporative hoses, and air pipe at rear of intake manifold.

4) Remove cooling fan and drive assembly, radiator, and radiator shroud assembly. Disconnect connector and "B" terminal wire from alternator. Disconnect connector from throttle sensor.

5) Without disconnecting refrigerant lines, remove compressor and air conditioning condenser (if equipped) and tie out of the way.

6) Disconnect choke heater connector. Disconnect accelerator, choke and hot start assist cables. Disconnect any remaining wires, tubes or linkages between engine and chassis at top of engine. Remove upper engine-to-transmission bolts.

7) Raise and support vehicle. Remove starter. Remove lower engine-to-transmission bolts. Remove exhaust pipe front cover. Remove

Copyright © 1998 Mitchell Repair Information Company, LLC
Sunday, August 26, 2001 04:57PM

nuts and bolts, and disconnect exhaust pipe from exhaust manifold. Support front catalytic converter.

8) Support front of transmission with jack and remove left and right engine mount nuts. Attach sling to engine and take up slack. Pull engine forward to clear clutch shaft, then lift engine from vehicle.

Installation

To install engine, reverse removal procedure ensuring that linkages, tubes and electrical connections are restored in original position. Refill all fluids to specified levels, warm up engine and check for leaks.

DISASSEMBLY

NOTE: To ease engine disassembly, manufacturer recommends use of special engine stand (49 0107 680A) and hanger (49 1114 005).

1) Loosen drive belts and hoses, and remove air pump and alternator. Disconnect metering oil pump connecting rod and hoses at metering oil pump outlets. Remove exhaust manifold cover. Remove intake manifold and carburetor. Remove gasket and "O" ring.

2) Remove exhaust manifold, engine mount and distributor . Remove, oil filter and cover from front housing. Remove water pump and drive pulley for air conditioning compressor (if equipped).

3) Turn engine over, and remove oil pan and strainer. Install flywheel brake (49 1881 060) on manual transmission models or stopper (49 1881 055) on automatic transmission models.

4) Remove eccentric shaft pulley. Take off front cover with gasket, and slide distributor gear off shaft. Remove "O" ring from oil passage. Remove oil pump sprocket nut. See Fig. 2. Slide oil pump sprocket, eccentric shaft sprocket and drive chain off together. Remove oil pump.

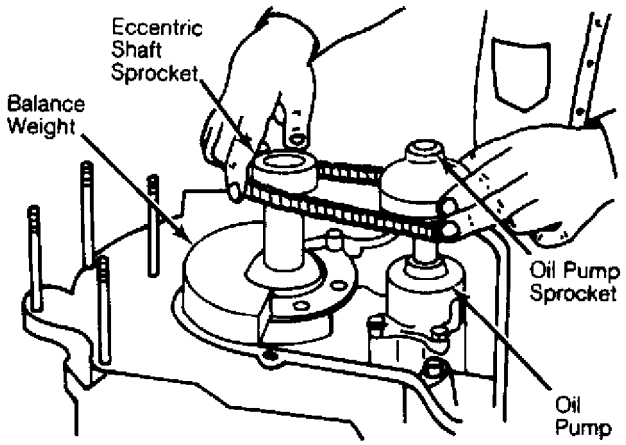

Fig. 2: Oil Pump Drive and Sprocket Removal
Pump drive and sprocket must be removed together.

5) Remove balance weight and following parts in order: Thrust

Copyright © 1998 Mitchell Repair Information Company, LLC
Sunday, August 26, 2001 04:57PM

washer, needle bearing, bearing housing, needle bearing, spacer and thrust plate.

6) On manual transmission models, remove clutch assembly. Use puller to remove flywheel. On automatic transmission models, remove drive plate. Use puller to remove counterweight.

7) Remove tension bolts on rear housing in sequence. See Fig. 3. Loosen in 2 or 3 steps. Lift rear housing off shaft. Remove any seals stuck to rotor sliding surface, and place them back in original positions. Remove seals and "O" rings from face of rear rotor housing.

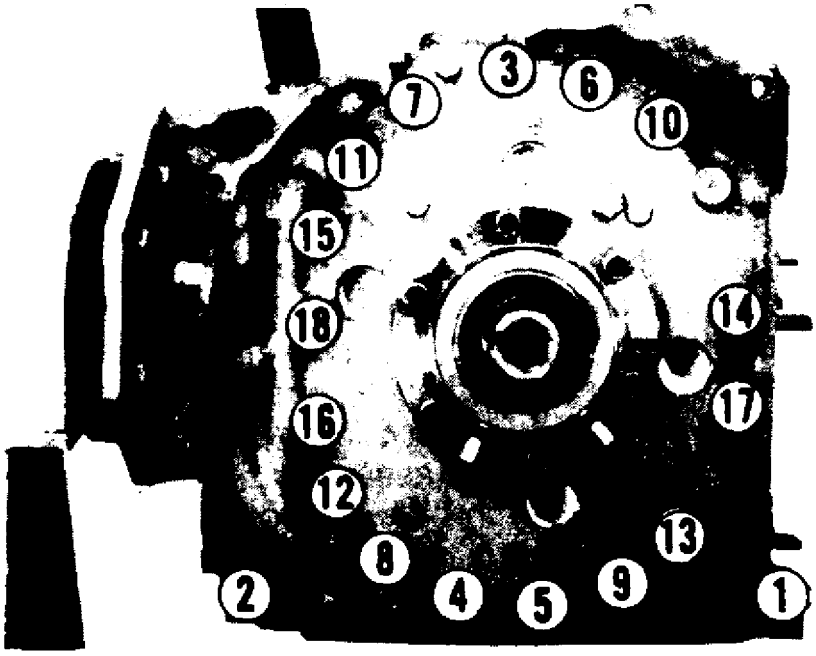

Fig. 3: Loosening Sequence of Tension Bolts
Loosen in 2 or 3 steps.

8) Attach dowel puller (49 0813 215A), and pull tubular dowels off rear rotor housing. See Fig. 4. Hold rotor housing by hand to keep it from moving up, and remove rear rotor housing. Use caution to avoid dropping apex seals and side pieces of rear rotor. Remove seals and "O" ring from front side of rear rotor housing.

9) Remove side pieces, apex seals and springs from rear rotor and store in order for reassembly. Remove all corner seals, corner seal springs, side seals and side seal springs and store in order for reassembly. Remove rear rotor, and place on clean pad with internal gear side down.

10) Remove seals and springs on remaining side of rotor, and store in order for reassembly. Place protector on seal inner lip, and remove outer seal with remover (49 0813 225). Remove inner seal. Remove seals and springs and store in order for reassembly. Mark rear rotor for assembly identification.

11) Attach puller, and while holding housing down, pull tubular dowels off intermediate housing. Remove intermediate housing

Copyright © 1998 Mitchell Repair Information Company, LLC
Sunday, August 26, 2001 04:57PM

by sliding beyond rear rotor journal on eccentric shaft. Carefully lift out eccentric shaft to avoid damage to rotor bearing and main bearing. Repeat steps 6) through 8) to remove front rotor housing and rotor assembly.

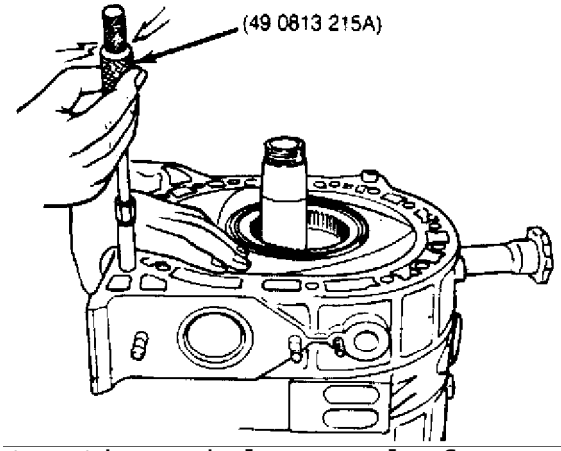

Fig. 4: Extracting Tubular Dowels from Engine
Hold housing down with hand.

INSPECTION & OVERHAUL

Front, Intermediate & Rear Housings

1) Clean housings, using extra fine emery paper to remove carbon deposits from rotor running surface. Use ketone or thinner to remove sealing agent.

2) Place a straightedge across housing surface in positions shown in Fig. 5. Using a feeler gauge, measure distortion of front housing. Replace housing if distortion limit of .0016" (.04 mm) is exceeded.

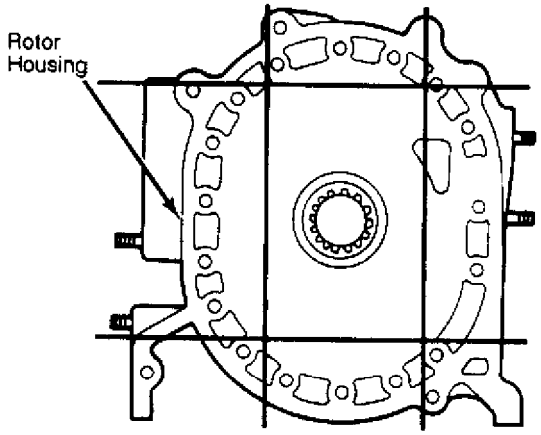

Fig. 5: Straightedge Positions for Checking Housing Distortions
Replace if warpage exceeds limit.

3) Remove oil pressure control valve and spring from front cover. Check for damage or corrosion. Replace if defective. Measure

Copyright © 1998 Mitchell Repair Information Company, LLC
Sunday, August 26, 2001 04:57PM

control valve spring free length. Free length must be 2.74" (69.6 mm).

NOTE: Cap bolt and valve spring for 1983 models are painted yellow. Never use a control valve spring from a 1982 or earlier year in 1983 models.

4) Check for stepped wear on rotor sliding surfaces of the 3 housings . Measurements are made using a dial indicator and gauge body. See Fig. 6.

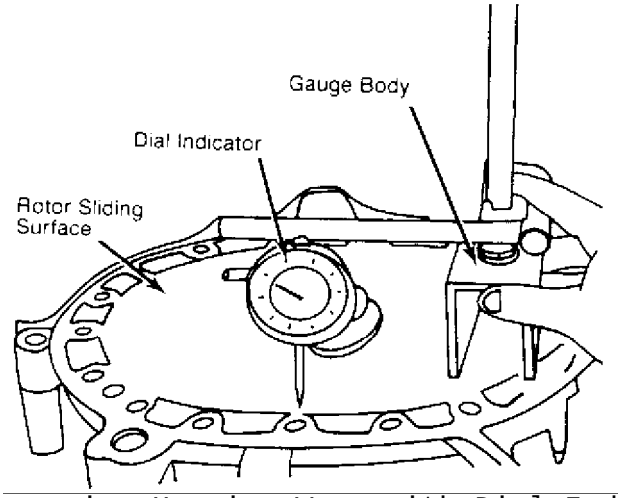

Fig. 6: Measuring Housing Wear with Dial Indicator
Check entire circumference of housing.

5) Side seal step wear must be checked on the inside and outside of oil seal tracing mark. See Fig. 7.

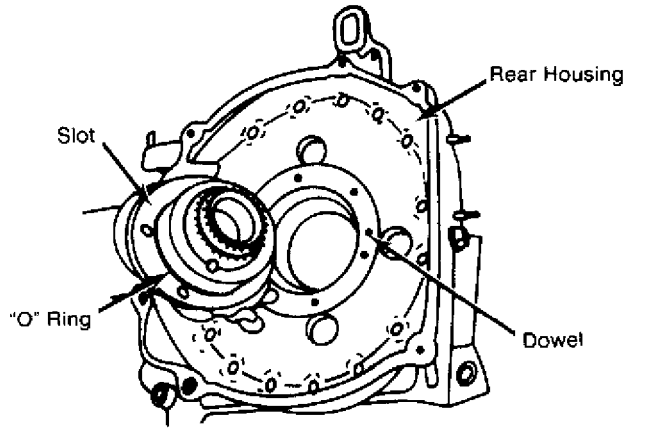

Fig. 7: Checking Side Seal Step Wear
Replace housing if step wear exceeds limit.

SIDE SEAL STEP WEAR TABLE

Location	Limit

Copyright © 1998 Mitchell Repair Information Company, LLC
Sunday, August 26, 2001 04:57PM

Inside Oil Seal Tracing Mark ..... .0004" (.01 mm)
Outside Oil Seal Tracing Mark ..... .004" (.10 mm)

6) Check oil seal step wear. Limit is .0008" (.02 mm). See Fig. 8.

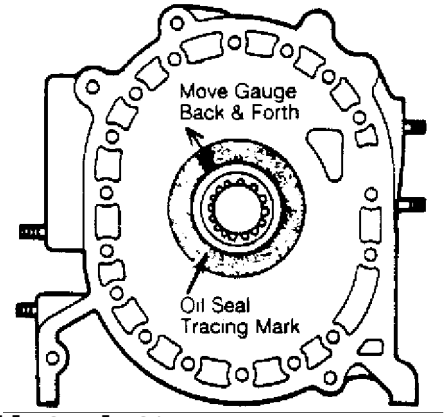

Fig. 8: Oil Seal Step Wear
Step wear limit is .0008" (.02 mm)

7) Measure inner diameter of main bearing and outer diameter of bearing journal on eccentric shaft. Standard clearance is .0016-.0028" (.04-.07 mm). If clearance exceeds .0039" (.10 mm), replace bearing.

8) To replace front or rear main bearing, remove stationary gear retaining bolts. Using a mandrel (49 0813 235), drive stationary gear with bearing out of housing .

9) Place stationary gear in a press. Use same mandrel and press main bearing out of stationary gear.

10) Install new bearings while aligning tang bearing with a slot of stationary gear. Press bearing into gear until adapter of mandrel just contacts stationary gear flange. Install the stationary gear into the housing, aligning the slot of the gear flange with the dowel pin on the housing. See Fig. 9.

NOTE: When installing rear main bearing, check condition of "O" ring and replace if necessary. Apply sealing agent on stationary gear flange prior to installing it on rear housing. Align pin and slot.

Copyright © 1998 Mitchell Repair Information Company, LLC
Sunday, August 26, 2001 04:57PM

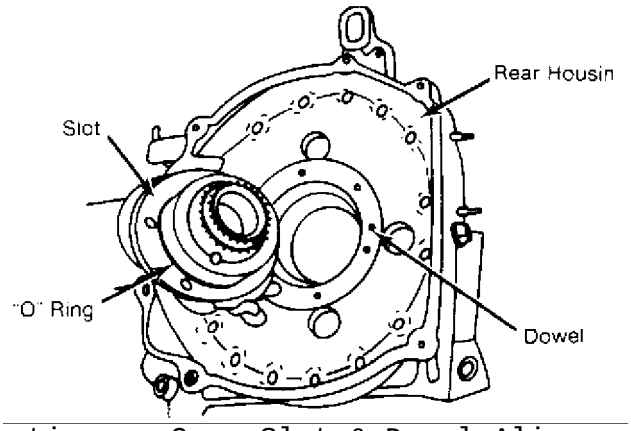

Fig. 9: Stationary Gear Slot & Dowel Alignment
Illustration applies to front and rear housings.

Rotor Housing

1) Inspect rotor housing for signs of water or gas leakage. Check for wear or damage to rotor running surface or stationary gear. Check main bearings for signs of scoring or flaking.

2) To clean housing, wipe off sealing agent or carbon in rotor running surface with a rag and ketone or thinner. Remove rust deposits in water cooling passages.

3) Inspect for cracks or damage to chromium-plated surface. Check for signs of gas or water leakage. Housing must be replaced if any of these conditions exist.

4) Place a straightedge across sealing surface of rotor housing and check for distortion with a feeler gauge. If distortion exceeds .0016" (.04 mm), replace housing. See Fig. 10.

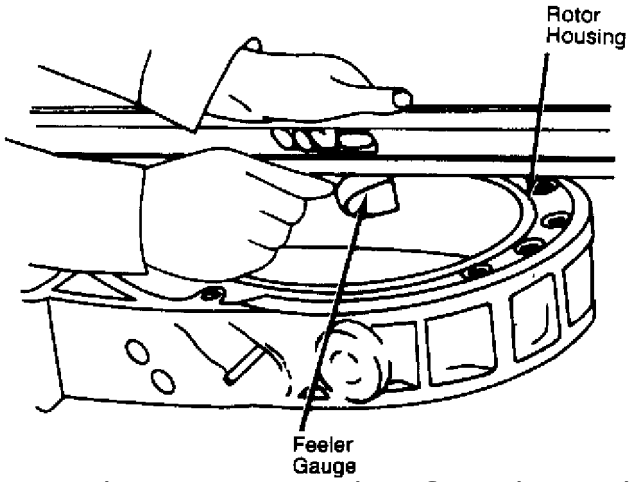

Fig. 10: Measuring Rotor Housing for Distortion
Replace if distortion exceeds limit.

5) Check rotor housing thickness at points A, B, C, and D in Fig. 11. If micrometer readings vary between point A and minimum value for B, C, and D by more than .0024" (.06 mm), replace rotor housing.

Copyright © 1998 Mitchell Repair Information Company, LLC
Sunday, August 26, 2001 04:57PM

NOTE: This excessive clearance would indicate a possibility of gas or water leakage.

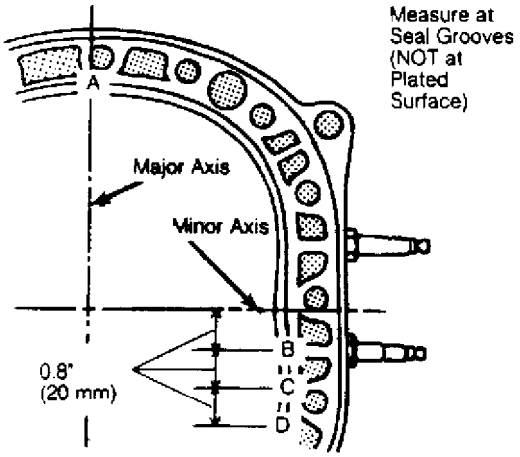

Fig. 11: Rotor Housing Thickness Check Points
Check thickness at A, B, C & D.

Rotors

1) Inspect rotor for wear or damage, and check internal gear for chips, cracks or scoring. Measure rotor width at 3 points, and subtract maximum width from width of rotor housing at point "A" in Fig. 11.

2) Clearance between side housing and rotor should be .0047-.0071" (.12-.18 mm). If clearance is excessive or rotor is damaged, replace rotor assembly.

3) If clearance is less than specified, internal gear may have come out. Strike internal gear lightly with plastic hammer and remeasure.

4) Measure inner diameter of rotor bearing and outside diameter of rotor bearing journal on eccentric shaft. Replace rotor bearing if clearance exceeds .0039" (.10 mm) or any damage is shown. See Rotor Bearing Replacement.

Rotor Oil Seal

With oil seal installed in rotor, measure contact lip width of seal. Seal must be replaced if contact width exceeds .020" (0.5 mm). Measure seal protrusion, and replace seal spring if protrusion is less than .020" (0.5 mm). See Fig. 12.

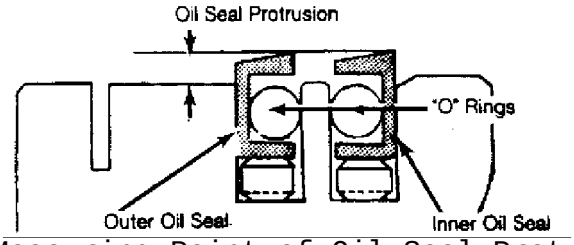

Fig. 12: Measuring Point of Oil Seal Protrusion
Check for free movement of seals in groove.

Copyright © 1998 Mitchell Repair Information Company, LLC
Sunday, August 26, 2001 04:57PM

Rotor Bearing Replacement

1) Place rotor bearing on support so internal gear is facing downward. Using rotor bearing replacer (49 0813 240), without adapter ring, press bearing out of rotor.

2) Place rotor on support with internal gear facing upward. Place a new rotor bearing so slot in rotor bore is in line with bearing lug. Press new bearing (using tool with adapter) until bearing is flush with rotor boss. See Fig. 13.

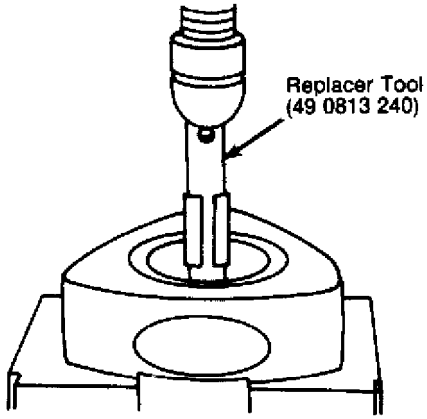

Fig. 13: Pressing Rotor Bearing from Rotor
Slot in rotor bore must be in line with bearing lug.

Apex Seal

1) Clean all carbon from apex seal and spring with a cleaning solution (not emery paper). Measure height of apex seal with a micrometer. See Fig. 14. Replace seal if height is less than .275" (7.0 mm).

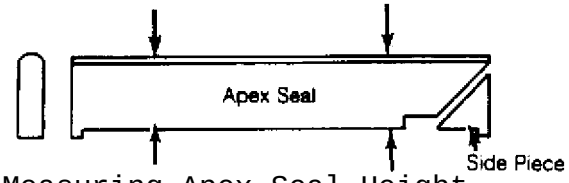

Fig. 14: Measuring Apex Seal Height
Clean thoroughly before measuring.

2) Check for warpage by measuring the clearance between the top surfaces of 2 apex seals with a feeler gauge. Replace all 3 seals if clearance exceeds .0024" (.06 mm). See Fig. 15.

Copyright © 1998 Mitchell Repair Information Company, LLC
Sunday, August 26, 2001 04:57PM

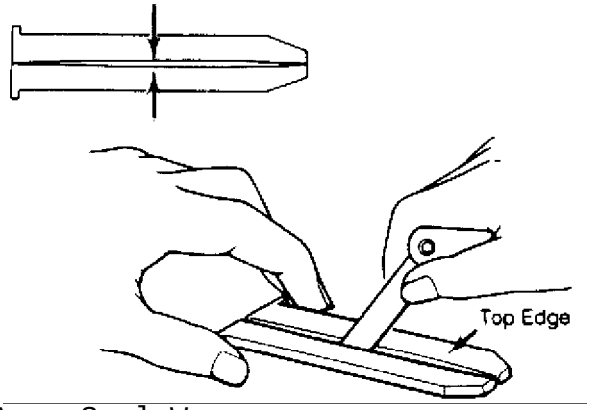

Fig. 15: Apex Seal Warpage
Replace if the clearance exceeds limits.

3) Using a feeler gauge, check gap between apex seal and groove in rotor. Feeler gauge should be inserted until tip of feeler gauge reaches bottom of groove.

4) Standard clearance is .0020-.0035" (.05-.09 mm). Replace apex seal if gap exceeds .0059" (.15 mm). Check seal spring height as shown in Fig. 16. Replace spring if free height is less than .2165" (5.5 mm).

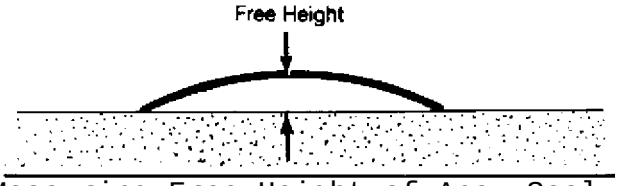

Fig. 16: Measuring Free Height of Apex Seal Spring
Height must be more than .2165" (5.5 mm).

Side Seal

1) Remove all carbon from side seal and spring. Check side seal protrusion from rotor surface, and confirm free movement by pressing with finger. Protrusion should be more than .02" (.5 mm).

2) Check gap between side seal and groove with a feeler gauge. Standard gap is .0012-.0031" (.03-.08 mm). If wear limit of .004" (.10 mm) is measured, replace side seal.

3) Check gap between side seal and corner seal with seals installed on rotor. Insert feeler gauge between end of side seal (against rotating direction of rotor) and the corner seal. If gap exceeds .016" (.4 mm), replace side seal.

4) When side seal is replaced, adjust gap between side seal and corner seal by grinding one end of side seal along round shape of corner seal, using a fine file. Adjust gap .002-.006" (.05-.15 mm).

Corner Seal

1) Clean carbon from corner seal. Check corner seal protrusion from rotor surface, and check free movement by pressing with finger. Protrusion should be more than .02" (.5 mm).

2) Extent of corner seal groove wear is determined by using

Copyright © 1998 Mitchell Repair Information Company, LLC
Sunday, August 26, 2001 04:57PM

special Bar Limit Gauge (49 0839 165) shown in Fig. 17, and is classified according to the following.

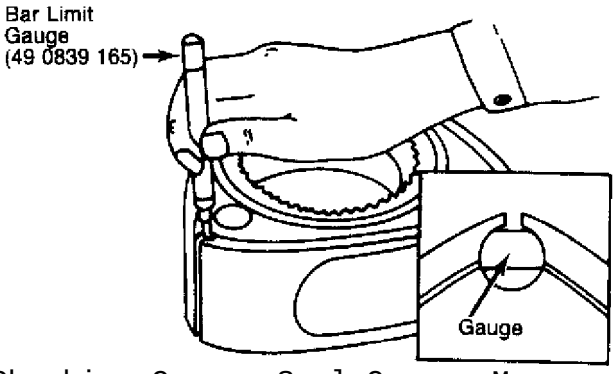

Fig. 17: Checking Corner Seal Groove Measurement
Replace rotor if both ends of gauge fit in gap.

3) If neither end of gauge goes into groove, it indicates that gap conforms to specifications. If "Go" end of gauge goes into groove, it indicates that gap is more than standard, but less than wear limit. In this case replace corner seal. See Fig. 18.

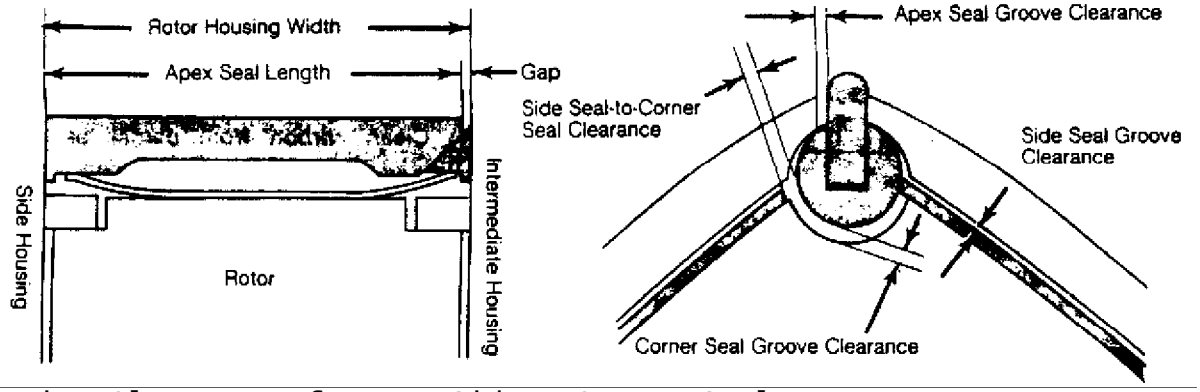

Fig. 18: Measuring Clearance of Apex, Side & Corner Seals

4) If both ends of gauge (both the "Go" and "No Go" ends) fit in groove, it indicates that gap exceeds wear limit. Replace rotor.

Eccentric Shaft

1) Thoroughly clean eccentric shaft in a cleaning solution and blow out oil passages with compressed air. Inspect shaft for scratching or scoring of bearing journals and possible blocked oil passages.

2) Check rotor bearing clearance by measuring inner diameter of the rotor bearing and outer diameter of the eccentric shaft rotor journal. Clearance should be .0016-.0031" (.04-.08 mm).

3) Replace the bearing if clearance exceeds .0039" (.10 mm). Replace eccentric shaft if journal diameters are under specified limits.

4) Place eccentric shaft in 2 "V" blocks. Mount a dial indicator and check runout of both ends by rotating shaft slowly. If

Copyright © 1998 Mitchell Repair Information Company, LLC
Sunday, August 26, 2001 04:57PM

runout exceeds .0024" (.06 mm), replace shaft.

5) Oil passages in eccentric shaft are sealed by a blind plug in rear of shaft. Inspect plug for possible oil leakage. If leakage is detected, remove plug with an Allen wrench, and install new "O" ring. Tighten plug.

6) Inspect needle bearings in end of shaft for wear or damage. Check for spring weakness, stuck, or damaged steel ball at the oil jets. Inspect front needle bearing, bearing housing, and thrust plate for wear or damage. Inspect front and rear oil seals for leaks, replace as necessary.

REASSEMBLY

Oil Seals

1) Place the rotor on rubber pad or cloth. Install oil seal springs in their respective grooves on rotors, with each edge of spring fitted in stopper hole.

2) Ensure oil seal springs have been painted in cream or blue color: Cream colored springs must be placed on front edge faces of rotors and blue springs on rear faces of rotors. When installing, painted side of spring must face oil seal (upward). See Fig. 19.

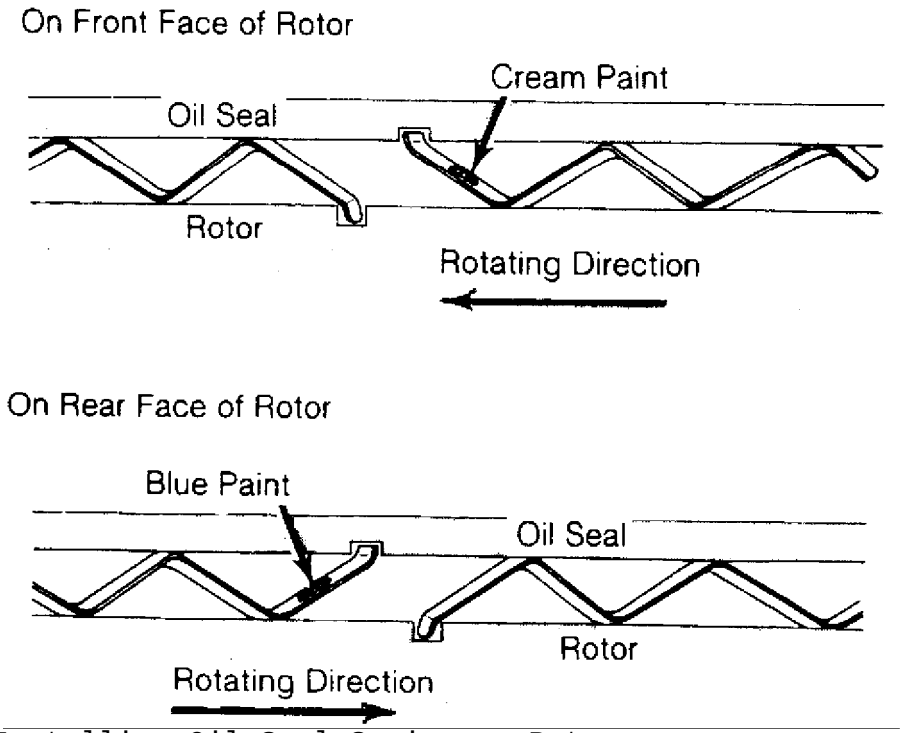

Fig. 19: Installing Oil Seal Spring on Rotor
Painted side of spring must face oil seal.

3) Insert new "O" ring in each oil seal. Install inner oil seal to each side of rotor as follows: Position oil seal to groove so square edge of spring fits in stopper notch of oil seal. Press into

Copyright © 1998 Mitchell Repair Information Company, LLC
Sunday, August 26, 2001 04:57PM

position by using a used inner oil seal so lip of inner oil seal sinks into position approximately .016" (.4 mm) below surface of rotor.

4) Install outer oil seal so square edge of spring fits in stopper notch of oil seal. Slowly push oil seal in position with fingers. Confirm smooth movement of each oil seal by pressing oil seal.

5) Check oil seal protrusion. Install oil seal springs and oil seals on the other side of rotor. Take care not to deform lip of oil seal.

Apex, Corner & Side Seals

1) Before installing apex seal, cut the assist piece to a length of .08-.011" (2.0-2.8 mm). Peel off paper and install assist piece of apex seal. See Fig. 20.

2) Position apex seals without springs and side pieces into their respective grooves so that each side piece rests on rear side of each rotor. Install the soft seal into the corner seal.

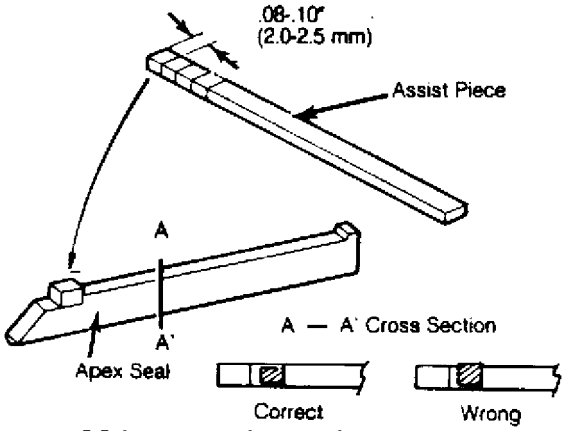

Fig. 20: Installing Assist Piece on Apex Seal

Check each seal for smooth movement.

3) Place corner seals and springs into their respective grooves, then position side seals and springs into proper grooves. Ensure smooth movement of each seal by pressing its head.

Installing Front Rotor

Mount front housing on engine stand and place front rotor assembly on housing. Use care not to drop seal into port. Mesh internal and stationary gears so that one rotor apex is set to one of 4 positions shown in Fig. 21.

Copyright © 1998 Mitchell Repair Information Company, LLC
Sunday, August 26, 2001 04:57PM

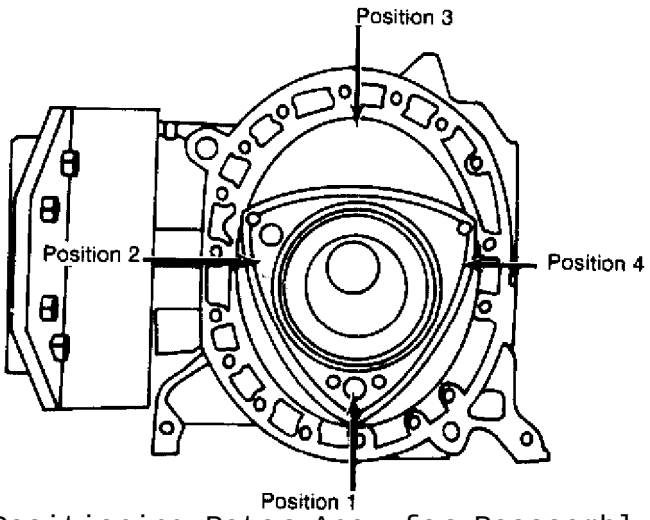

Fig. 21: Positioning Rotor Apex for Reassembly
Use care not to drop seal into port.

Installing Eccentric Shaft

Lubricate front rotor journal and main journal on shaft with engine lubricant. Being careful not to damage rotor and main bearings, insert eccentric shaft.

Installing Front Rotor Housing

1) As front and rear rotor housings are not interchangeable, be sure they are installed in correct sequence. Apply sealing agent to front side of rotor housing. See Fig. 22.

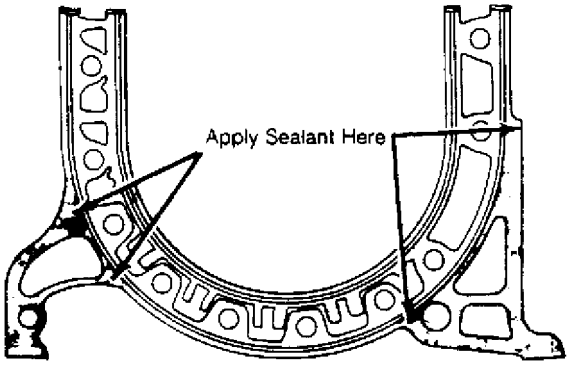

Fig. 22: Applying Sealing Agent to Rotor Assembly

2) To provide greater durability to sealing rubbers, install a protector behind each inner sealing rubber. See Fig. 23. Install a new "O" ring, sealing rubbers and protector in front side of engine housing. Apply light coat of petroleum jelly to hold seals in place.

Copyright © 1998 Mitchell Repair Information Company, LLC
Sunday, August 26, 2001 04:57PM

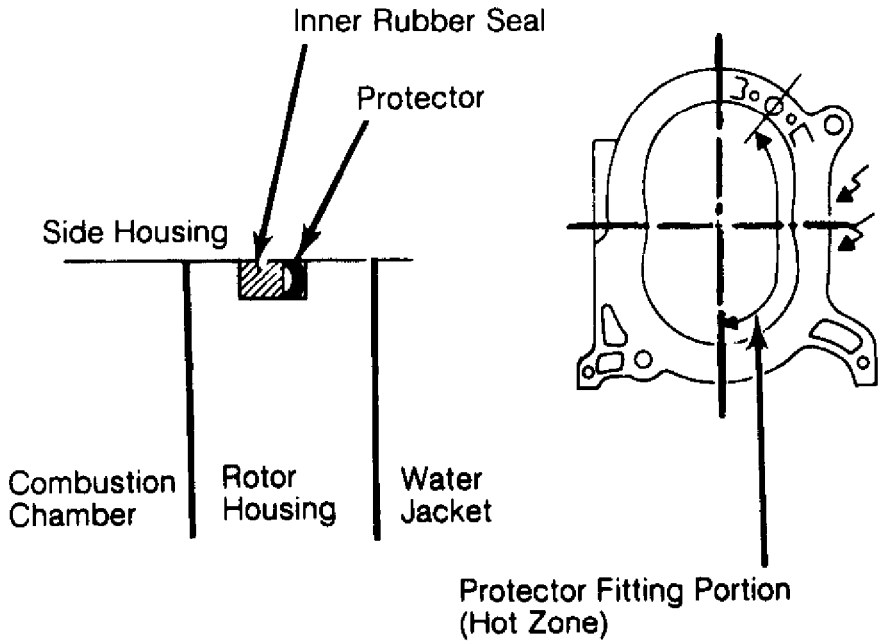

Fig. 23: Installing Protectors for Inner Sealing Rubbers
Apply light coat of petroleum jelly to hold seals in place.

NOTE: Inner sealing rubber is square type. The wider white line of sealing rubber should face toward combustion chamber and seam of rubber should be placed as shown in Fig. 24. Do not stretch sealing rubbers.

3) Invert front rotor housing using care that seals remain in position, and install on front housing. Lubricate tubular dowels and insert through front rotor housing holes.

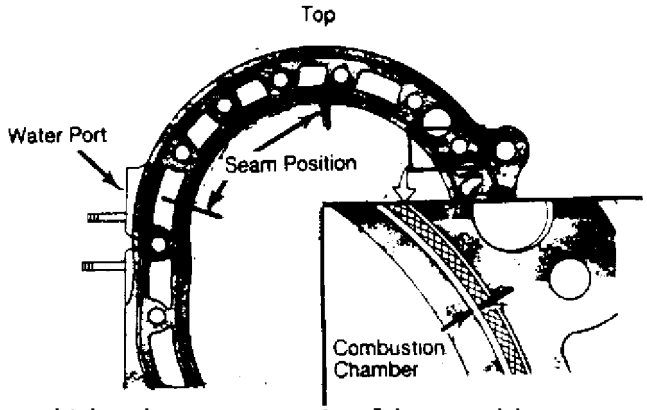

Fig. 24: Positioning Inner Sealing Rubber
Wider white line of sealing rubber should face toward combustion chamber.

Copyright © 1998 Mitchell Repair Information Company, LLC
Sunday, August 26, 2001 04:57PM

4) Insert apex seal springs so that both ends of spring may support the back side of the apex seal. Install the soft seal into corner seal. Install corner seal springs and seals into their respective grooves. Fit side pieces to original positions and lubricate with engine oil.

5) Confirm that spring is set correctly on side piece. See Fig. 25. Confirm smooth movement of each seal by pressing on head.

6) Apply sealing agent on the rear side of front housing in areas shown in Fig. 22 and then place new "O" ring, sealing rubbers and protector on rear side of front housing. Apply engine oil to sliding surfaces of front rotor housing.

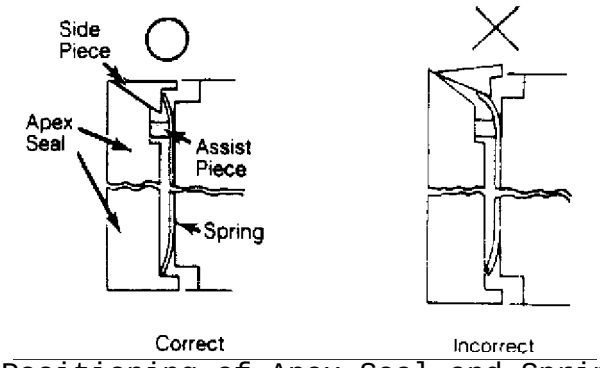

Fig. 25: Positioning of Apex Seal and Spring
Check side piece for correct installation.

Installing Intermediate Housing

1) Turn front housing and rotor assembly so that top of housing is upward. Pull eccentric shaft outward approximately 1.0" (25 mm), but not more than 1.5" (38 mm).

2) Rotate eccentric shaft until eccentric portion points to 2 o'clock position. Install intermediate housing over eccentric shaft and turn engine so that rear of engine is upward.

Installing Rear Rotor & Housing

Use same procedures up to Intermediate Housing when installing rear rotor and rotor housing.

Installing Rear Housing

Position engine with rear end upward. Apply sufficient lubricant onto stationary gear and main bearing. Install rear housing onto rear rotor housing, and turn rear rotor slightly to engage rear housing stationary gear with rear rotor internal gear.

Tightening Tension Bolts

Place a new sealing washer on each tension bolt and oil threads of each bolt. Tighten bolts, in sequence shown in Fig. 26, in stages until final torque is reached. After tightening, turn eccentric shaft to make sure rotation is light and smooth.

Copyright © 1998 Mitchell Repair Information Company, LLC
Sunday, August 26, 2001 04:57PM

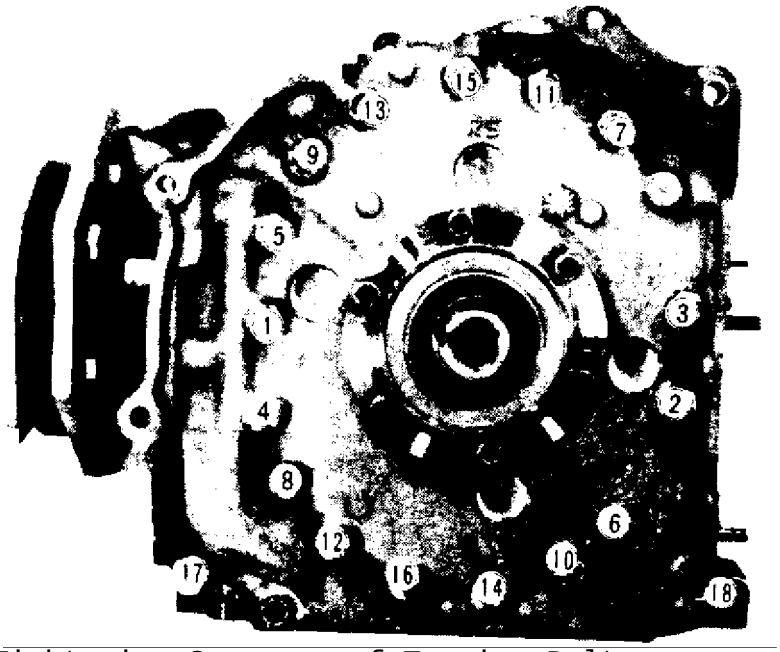

Fig. 26: Tightening Sequence of Tension Bolts

Replace all tension bolt sealing washers when the engine is overhauled.

Flywheel Counterweight Installation (Man. Trans.)

1) Apply engine oil to oil seal in the rear housing. Mount flywheel to rear end of eccentric shaft so that key fits into flywheel keyway.

2) Apply sealing agent to lock nut surface that contacts flywheel. Hold flywheel with ring gear brake (49 1881 060), and tighten lock nut to specifications.

3) Hold clutch disc in position with clutch disc centering tool (49 0813 310 or equivalent). Mount clutch cover and pressure plate assembly on flywheel, and align the "O" marks of clutch cover and flywheel.

4) Install 4 standard and 2 reamer bolts finger tight. To avoid distortion of pressure plate cover, tighten bolts in steps, a few turns at a time, until all are tight.

Flywheel Counterweight Installation (Auto. Trans.)

1) Apply engine oil to oil seal in rear housing. Fit key to eccentric shaft. Install counterweight to eccentric shaft. Apply sealing agent to lock nut surface that will contact counterweight and install lock nut.

2) Hold counterweight with stopper (49 1881 055), and tighten lock nut. Install drive plate to counterweight so hole in counterweight and drive plate line up.

Eccentric Shaft End Play Adjustment

1) Turn engine so front is up. Install thrust plate with

Copyright © 1998 Mitchell Repair Information Company, LLC
Sunday, August 26, 2001 04:57PM

chamfer downward. Slide spacer and needle bearing on eccentric shaft. Lubricate shaft and bearings, and install bearing housing.

NOTE: If bearing housing has not been removed, use care that center of needle bearing in bearing housing comes to center of eccentric shaft and that spacer is seated to thrust plate.

2) Lubricate and install needle bearing, thrust washer, and balance weight on shaft. Install keys in oil pump and eccentric shaft keyways. Place oil pump drive chain on oil pump sprocket and eccentric shaft sprocket. Install sprockets on shafts.

3) Align the keyways of eccentric shaft sprocket and balance weight. Install key. Install distributor drive gear, with "F" mark on gear facing front of engine. Install eccentric shaft pulley on shaft. Use new washer, and tighten pulley bolt to specification.

4) Turn engine so top is upward. Attach a dial indicator on the flywheel or counterweight so it contacts rear housing. Move flywheel or counterweight back and forth.

5) Standard end play is .0016-.0028" (.04-.07 mm). If end play is more than .0035" (.09 mm) grind spacer on surface plate with emery paper or install thinner spacer. If end play is less than .0016" (.04 mm), install thicker spacer.

6) Oversize spacers are available in 5 sizes from .3181" to .3150" (8.08 mm to 8.00 mm) and are identified by stamped letter "X", "K", "Y", "V", and "Z" respectively. When spacer has been installed, recheck end play.

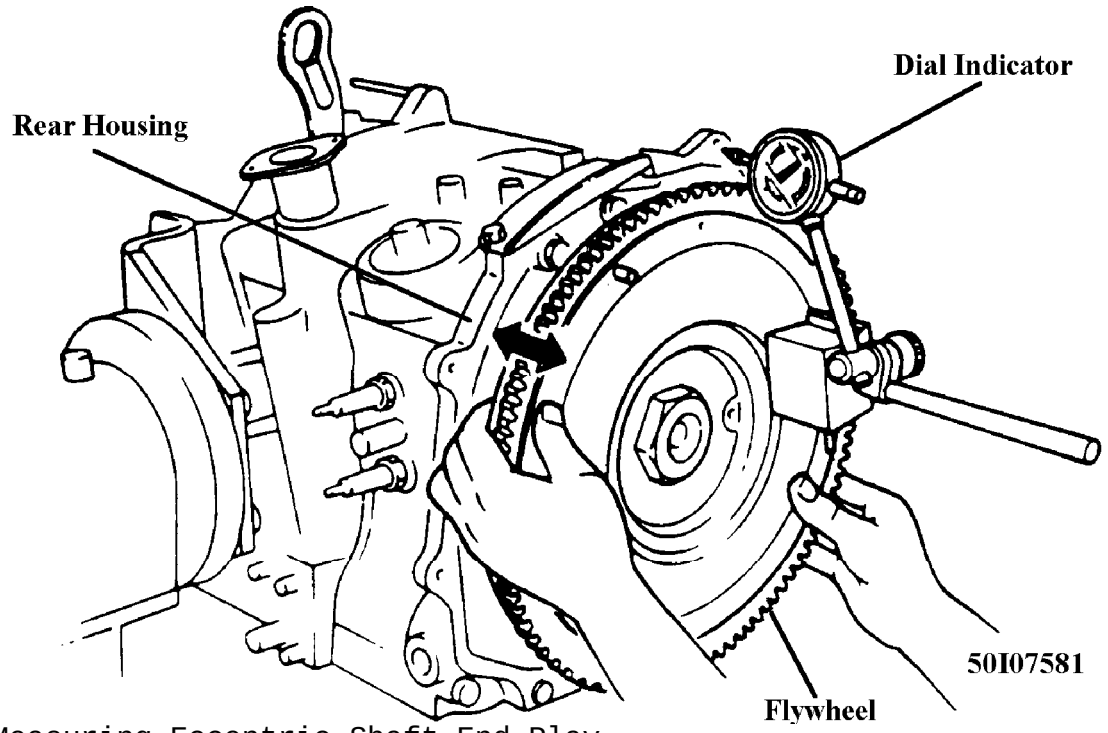

Fig. 27: Measuring Eccentric Shaft End Play
Standard end play is .0016-.0028" (.04-.07mm).

Copyright © 1998 Mitchell Repair Information Company, LLC
Sunday, August 26, 2001 04:57PM

NOTE: If end play is below specified amount, spacer thickness is too small. If end play is beyond specifications, spacer is too thick.

Installing Front Cover & Eccentric Shaft Pulley

1) Turn engine so front is upward. Remove eccentric shaft pulley. Tighten oil pump sprocket nut and bend tab of lock washer.

2) Check oil pump drive chain slack by pressing finger against chain. See Fig. 29 Chain slack measurement should not exceed .47" (12 mm). If the slack exceeds the limit, replace drive chain.

3) Install new "O" ring on front housing oil passage. Install front cover and gasket on front housing. Lubricate oil seal in front cover. Install eccentric shaft pulley on shaft. Use new washer and tighten pulley bolt.

Installing Oil Strainer & Oil Pan

1) Invert engine so that bottom of engine is up. Install oil strainer gasket and strainer on front housing. Cut off excess gasket along mounting surface of oil pan.

2) Apply a .16-.24" (4-6 mm) bead of sealer on mounting surface of oil pan (to the inside of pan bolt holes) and install gasket. Apply a similar bead of sealant to gasket. Install pan and tighten bolts.

Installing Water Pump

Turn engine upright, position gasket and water pump on front housing and tighten attaching bolts.

NOTE: For further information on cooling system components, see Cooling System in this article.

Installing Distributor

1) Rotate eccentric shaft until yellow mark (leading timing mark) on pulley aligns with indicator pin on front cover. Align notch on distributor housing with punch mark on driven gear.

2) Insert distributor and lock nut. Turn distributor housing until a trigger wheel blade aligns with pick-up coil. Tighten lock nut.

Installing External Components

1) Install exhaust manifold, engine mount, intake manifold with carburetor, and alternator and drive belt. Check clearance between alternator support and bracket. Limit is .0059" (.15 mm). Adjust with shim if necessary.

2) Install air pump and drive belt. oil filter assembly and all other external components. Before removing engine from stand, install engine hanger bracket to front cover.

ENGINE OILING

CRANKCASE CAPACITY

Copyright © 1998 Mitchell Repair Information Company, LLC
Sunday, August 26, 2001 04:57PM

The crankcase capacity is 4.9 quarts (4.6L), including filter.

OIL FILTER

A full-flow, disposable cartridge-type filter is mounted on the rear housing.

NORMAL OIL PRESSURE

Normal oil pressure is 10-26 psi (.7-1.8 kg/cmý) at idle speed, 64-78 psi (4.5-5.5 kg/cmý) at 3000 RPM.

ENGINE OILING SYSTEM

Engine oiling system is forced circulation using a 2 rotor type oil pump. Oil pump is mounted on front housing and is chain driven through eccentric shaft. The oil pressure is maintained through a regulator valve and pressure control valve. A full flow oil filter and oil cooler are mounted on the rear housing.

Oil is directed from the oil pump to the oil pressure control valve in the front cover. The oil then flows to the oil filter/cooler assembly on the rear cover which directs lubricating oil to all internal parts. The pressure regulator valve in the rear cover acts as a secondary pressure regulation device.

The oil pressure control valve is designed to open at 114 psi (8 kg/cmý). The free length of the control valve spring should be 2.74" (69.6 mm). Never use an oil pressure control spring from a previous year in a 1983 model. The cap bolt and spring are painted yellow in 1983. The oil pressure regulator valve will relieve pressure at 71.1 psi (4.9 kg/cmý). Its spring free length should be 1.83" (46.4 mm).

The engine is equipped with a metering oil pump which regulates the amount of oil pumped to the float chamber of the carburetor. The oil enters the combustion chamber with the air/fuel mixture to lubricate the seals within the chamber. The amount of oil increases as engine RPM increases. The metering pump control lever is actuated by a rod connected to the throttle lever.

Copyright © 1998 Mitchell Repair Information Company, LLC
Sunday, August 26, 2001 04:57PM

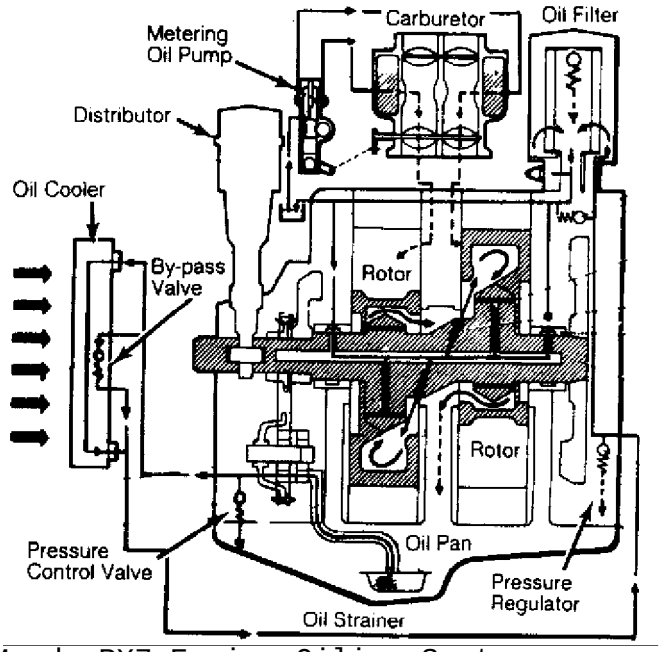

Fig. 28: Mazda RX7 Engine Oiling System

OIL PUMP

NOTE: Oil pump is mounted on the front engine housing and must be overhauled with front engine cover removed.

1) Remove front engine cover. Check oil pump drive chain slack by pressing finger against chain and measuring slack. If measurement exceeds .47" (12 mm), replace drive chain. See Fig. 29.

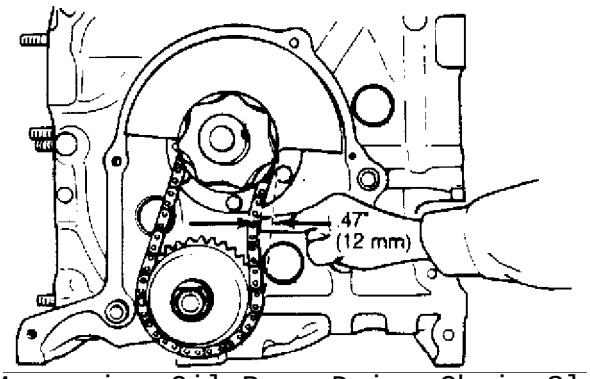

Fig. 29: Measuring Oil Pump Drive Chain Slack
Replace chain if slack exceeds limit.

2) Disassemble oil pump in following order: Remove snap ring, rear outer rotor, rear inner rotor, key, and middle plate. Remove front inner rotor, key shaft, spring pin, and front outer rotor. See Fig. 30.

Copyright © 1998 Mitchell Repair Information Company, LLC
Sunday, August 26, 2001 04:57PM

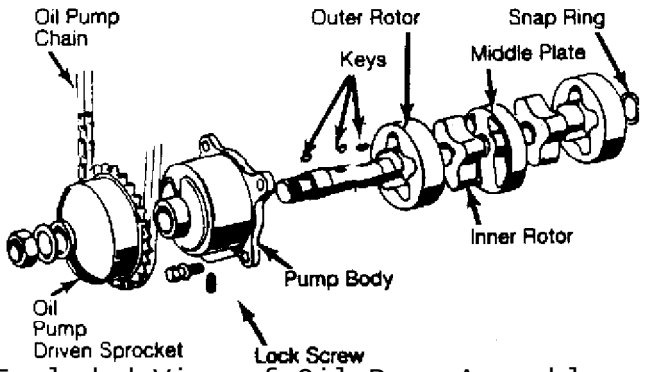

Fig. 30: Exploded View of Oil Pump Assembly

3) Insert a feeler gauge between lobes of inner and outer rotors and check clearance. If beyond .006" (.15 mm), replace both rotors.

4) Check clearance between outer rotor and pump housing with a feeler gauge. If clearance exceeds .012" (.30 mm), replace rotors and housing.

5) Place straightedge across pump mounting surface, and check rotor end play with a feeler gauge. If beyond .006" (.15 mm), replace pump body or rotors.

6) To assembly oil pump, reverse disassembly procedure. Install oil pump and tighten bolts. Install sprockets and chain as previously outlined. See Eccentric Shaft End Play Adjustment.

METERING OIL PUMP

1) Check clearance between metering pump lever and washer. See Fig. 31. Clearance must be no more than .04" (1.0 mm).

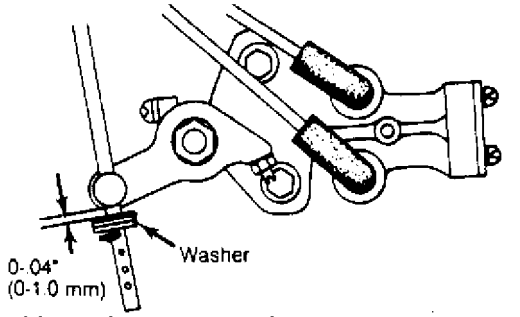

Fig. 31: Adjusting Metering Pump Control Rod
Adjust clearance by changing washers.

2) To check oil discharge, detach connecting rod. Disconnect oil lines at carburetor. Start engine and adjust idle to 2000 RPM. Once oil flow from hoses becomes steady, measure volume discharged. Pump should discharge .07-.08 oz. (2.0-2.4 cc) in 6 minutes.

CAUTION: Carburetor will not be receiving oil during test. Add small amount of clean oil to carburetor to provide proper lubrication during testing.

Copyright © 1998 Mitchell Repair Information Company, LLC
Sunday, August 26, 2001 04:57PM

3) To adjust oil metering pump, turn the adjusting screw clockwise to increase flow or counterclockwise to decrease flow. One completer turn will change oil discharge flow by .007-.011" oz. (.2-.3 cc) for 6 minutes of operation.
4) Ensure lock nut on adjustment screw is tight. Recheck metering oil pump discharge rate.

OIL COOLER

Inspection
Check the oil cooler for damage, cracks, or leaks. Replace the oil cooler if defective.

Removal & Installation
1) Remove water hoses installed on the inlet and outlet sides of cooler. Remove oil pipe and sealing washer. Remove oil cooler and filter housing as an assembly.
2) Remove "O" rings. Do not disassemble. Replace as an assembly if necessary. To install, reverse removal procedure. Use new filter, "O" rings, and sealing washer. Add engine oil and coolant. Start engine and check for leaks.

ENGINE COOLING

THERMOSTAT

Thermostat is a wax pellet type which starts to open at 180øF (82øC) and fully opens at 203øF (95øC).

PRESSURE CAP

The radiator pressure cap is rated at 13 psi (.9 kg/cmý).

WATER PUMP

Removal
1) Drain cooling system. Remove air cleaner, water temperature switch connector, air conditioner drive belt, and air pump drive belt.
2) Remove alternator, cooling fan, and drive belts. Remove air conditioning pulley (if equipped). Disconnect radiator hoses and remove water pump.

Disassembly
1) Press the pulley boss off of the pump shaft. Remove the snap ring.
2) Supporting the pump body, apply pressure to the rear end of the shaft to press the shaft, spacer, and bearing assembly out through the front of the pump body. See Fig. 32.
3) Remove impeller and seal assembly from the pump body. Press bearings and spacer from the shaft.

Copyright © 1998 Mitchell Repair Information Company, LLC
Sunday, August 26, 2001 04:57PM

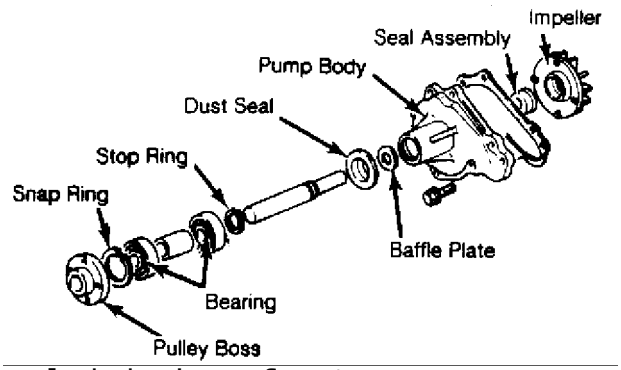

Fig. 32: Exploded View of Water Pump

Reassembly

1) Install stop ring and dust seal on the shaft. Drive baffle plate onto the taper of the shaft.

2) Press the rear bearing onto the shaft with sealed side rearward until it contacts the stop ring. Press shaft and bearing assembly into the pump body.

3) Place spacer on the shaft fill with grease. Install front bearing (sealed side forward) until the snap ring can be installed. Press pulley boss onto pump shaft.

4) Install the seal assembly into the body. Press impeller onto the shaft until it is flush with the end of the shaft.

Installation

To install, reverse removal procedure. Adjust drive belt tension and refill cooling system.

TORQUE SPECIFICATIONS

TORQUE SPECIFICATIONS TABLE

Application	Ft. Lbs. (N.m)
Eccentric Shaft Pulley	72-87 (98-118)
Flywheel Lock Nut	289-362 (393-492)
Intake Manifold	14-19 (19-26)
Oil Pump Sprocket	23-34 (32-47)
Pressure Plate	13-20 (18-27)
Water Pump	13-20 (18-27)

ENGINE SPECIFICATIONS

GENERAL SPECIFICATIONS

GENERAL SPECIFICATIONS TABLE

Displacement

Copyright © 1998 Mitchell Repair Information Company, LLC
Sunday, August 26, 2001 04:57PM

Cu. In.	70
Liters	1.1
Fuel System	4 Bbl.
HP @ RPM	...
Torque Ft. @ RPM	...
Compr. Ratio	9.4:1
Rotor Housing Width	
In. (mm)	2.7559 (70)

ROTOR SPECIFICATIONS

ROTOR HOUSING, INTERMEDIATE HOUSING & ROTOR SPECIFICATIONS TABLE

Front	
Rotor Housing	
Width In. (mm)	2.7559 (70)
Distortion Limit In. (mm)	.0016 (.04)
Front, Intermediate & Rear Housing	
Width In. (mm)	1.576 (40)
Distortion Limit In. (mm)	.0016 (.40)
Rotor	
Width In (mm)	2.748 (69.8)
Housing-to-Rotor Protrusion	.0047-.0074 (.12-.19)
Land Protrusion In. (mm)	...
Center	
Front, Intermediate & Rear Housing	
Width In. (mm)	1.969 (50)
Distortion Limit In. (mm)	.0016 (.40)
Rear	
Rotor Housing	
Width In. (mm)	2.7559 (70)
Distortion Limit In. (mm)	.0016 (.04)
Front, Intermediate & Rear Housing	
Width In. (mm)	2.362 (60)
Distortion Limit In. (mm)	.0016 (.40)
Rotor	
Width In (mm)	2.748 (69.8)
Housing-to-Rotor Protrusion	.0047-.0074 (.12-.19)
Land Protrusion In. (mm)	...

APEX SEAL SPECIFICATIONS

APEX SEAL SPECIFICATIONS TABLE

Length In. (mm)	2.748 (69.8)
Seal Width In. (mm)	.1181 (3.0)
Height In. (mm)	.3347 (8.5)
Seal-To-Housing	
Clearance	...

Copyright © 1998 Mitchell Repair Information Company, LLC
Sunday, August 26, 2001 04:57PM

Wear Limit	...
Seal-To-Rotor	
Groove Clearance	.0020-.0035 (.05-.09)
Wear Limit	.0059 (.15)

SIDE SEAL SPECIFICATIONS

SIDE SEAL SPECIFICATIONS TABLE

Thickness In. (mm)	.4331 (11.0)
Width In. (mm)	.2756 (7.0)
Seal-To-Groove	
Clearance In. (mm)	...
Limit In (mm)	...
Side Seal-To-Corner Seal	
Clearance In. (mm)	.0020-.0059 (.05-.15)
Limit In. (mm)	.0157 (.40)

SHAFT & ROTOR BEARING SPECIFICATIONS

ECCENTRIC SHAFT MAIN & ROTOR BEARINGS SPECIFICATIONS TABLE

Main Bearings	
Journal Diameter In. (mm)	1.6929 (43)
Clearance In. (mm)	.0016-.0031 (.04-.08)
Eccentric Shaft End Play In. (mm)	.0016-.0028 (.04-.07)
Rotor Bearings	
Journal Diameter In. (mm)	2.9134 (74)
Clearance	.0016-.0031 (.04-.08)

CORNER SEAL SPECIFICATIONS

CORNER SEAL SPECIFICATIONS TABLE

Diameter In. (mm)	.4331 (11.0)
Height In. (mm)	.2756 (7.0)
Seal-To-Groove	
Clearance In. (mm)	...
Limit In. (mm)	...
Side Seal-To-Corner Seal	
Clearance In. (mm)	.0020-.0059 (.05-.15)
Limit In. (mm)	.0157 (.40)

OIL SEAL SPECIFICATIONS

OIL SEAL SPECIFICATIONS TABLE

Height In. (mm)	.2205 (5.6)

Copyright © 1998 Mitchell Repair Information Company, LLC
Sunday, August 26, 2001 04:57PM

Seal Lip Contact Width
Standard In. (mm) ..... Less than .02 (Less than .5)
Limit In. (mm) ....

PORT TIMING SPECIFICATIONS

PORT TIMING SPECIFICATION TABLES

Intake	
Open (ATDC)	32ø
Close (ABDC)	40ø
Exhaust	
Open (BBDC)	75ø
Close (ATDC)	38ø

END OF ARTICLE

A - ENGINE/VIN ID
Article Text

Copyright © 1998 Mitchell Repair Information Company, LLC
Sunday, August 26, 2001 05:51PM

ARTICLE BEGINNING

1983-88 ENGINE PERFORMANCE
Mazda VIN Code Identification

RX7

MODEL IDENTIFICATION

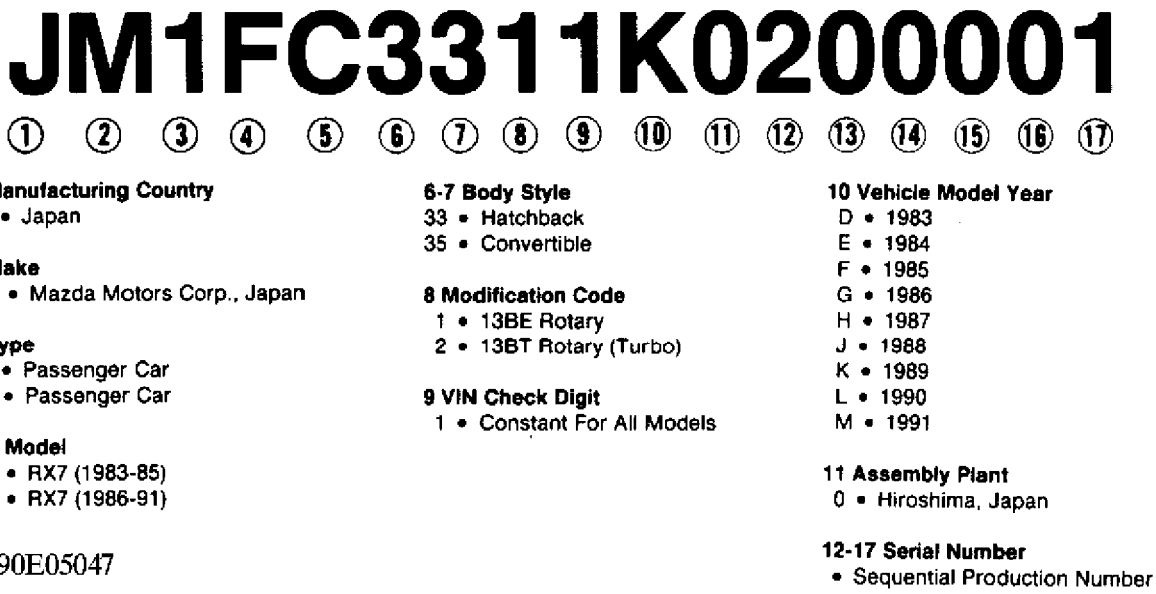

Fig. 1: VIN Code Identification

VIN CODE ID EXPLANATION

Numbers preceding the explanations in the legend below refer to the sequence of characters as listed on VIN identification label in Fig. 1. The legend listed below will also be found in Fig. 1.

1 Manufacturing Country
J * Japan

2 Make
M * Mazda Motors Corp., Japan

3 Type
1 * Passenger Car
V * Passenger Car

4-5 Model
FB * RX7 1983-85
FB * RX7 1986-88

6-7 Body Style
33 * HB RX7

Copyright © 1998 Mitchell Repair Information Company, LLC
Sunday, August 26, 2001 05:51PM

```
  35  *  Convertible

8 Modification Code
  1  *  Not Specified By Manufacturer

9 VIN Check Digit
  1  *  Constant For All Models

10 Vehicle Model Year
  D  *  1983
  E  *  1984
  F  *  1985
  G  *  1986
  H  *  1987
  J  *  1988

11 Assembly Plant
  0  *  Hiroshima, Japan

12-17 Serial Number
  *  Sequential Production Number
```

END OF ARTICLE

AIR INJECTION SYSTEM
Article Text

Copyright © 1998 Mitchell Repair Information Company, LLC
Sunday, August 26, 2001 04:57PM

ARTICLE BEGINNING

1983 Exhaust Emission Systems
MAZDA RX7 ENGINE AIR INJECTION SYSTEM

DESCRIPTION

This system controls CO, HC and NOx emissions by injecting secondary air into the exhaust system to cause further burning of exhaust gases. System consists of an air pump, 2 check valves, an air control valve, relief solenoid valve, switching solenoid valve, heat hazard sensor, monolith converter and pellet converter.

Air is drawn from the clean side of the air cleaner by the air pump and directed to the air control valve under pressure. From the air control valve, secondary air is directed (by the switching solenoid valve) "downstream" to the pellet converter or "upstream" to the exhaust port.

The secondary air system contains 2 check valves to prevent exhaust gas from leaking back into the air pump. The switching solenoid valve directs secondary air through the air control valve "downstream" and/or "upstream", based upon engine temperature, manifold vacuum and engine speed.

The relief solenoid valve controls the amount of air injected according to intake manifold vacuum. Under normal operating conditions, part of the secondary air supplied by the air pump is directed back to the air cleaner. The heat hazard sensor lights an exhaust temperature warning light on the instrument panel if exhaust temperatures become excessive.

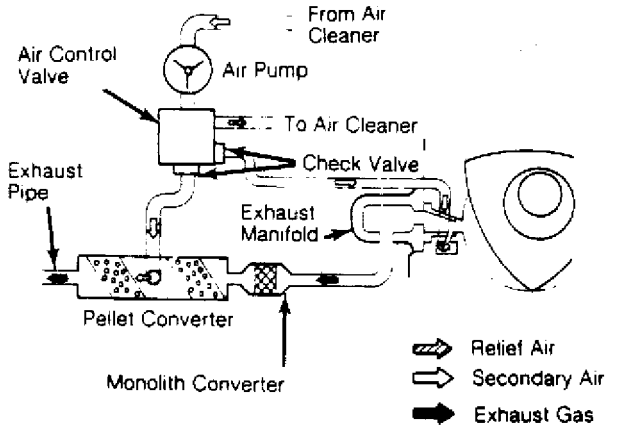

Fig. 1: Mazda RX7 Air Injection System

TESTING

Note: Before replacing air control valve, switching solenoid valve or relief solenoid valve, check auxiliary control unit, No. 2 water temperature switch, choke switch and choke relay as described in "Mazda RX7 Auxiliary Control Device" article in this section. Also, check throttle

Copyright © 1998 Mitchell Repair Information Company, LLC
Sunday, August 26, 2001 04:57PM

sensor as described in "Mazda RX7 Deceleration Control System" article in this section.

AIR PUMP TEST

1) With engine at normal operating temperature, inspect all hose connections for leaks. Check for pump noise and belt tension.
2) Stop engine and disconnect air line at air control valve. Connect hose to a pressure gauge. Connect tachometer to engine.
3) Start engine and run at idle speed. Gauge should register more than 1.64 psi (.12 kg/cmý) with engine at 800 RPM. If pump pressure is below specification, replace air pump.

CHECK VALVES TEST

1) Check valves are located at the air control valve exhaust port outlet and in the air supply line between the air control valve and pellet converter.
2) To test exhaust port check valve, detach air pump-to-air control valve hose at air control valve. To test converter check valve, detach air control valve-to-pellet converter hose at air control valve. Test each valve separately using the following procedure:
3) With engine at normal operating temperature, connect tachometer to engine. Detach hose for valve to be tested. Start engine and increase engine speed to 1500 RPM. Watch for exhaust leak. If leak exists, replace check valve being tested.

AIR CONTROL VALVE TEST

1) After ensuring air pump and all hoses are correct, check carburetor and air control valve attaching nuts for tightness. Warm engine to normal operating temperature.
2) Stop engine and connect a tachometer. Disconnect air cleaner-to-air control valve hose at air cleaner. Disconnect both vacuum hoses from relief solenoid valve (Blue color dot).
3) Using rubber hose, by-pass relief solenoid valve by connecting vacuum lines on each side of relief valve together. See Fig. 2. This will cause manifold vacuum to be routed directly to air control valve.
4) Start engine and run at idle. Place finger over air cleaner-to-air control valve hose and check that air is not escaping through hose. Disconnect rubber hose used to by-pass relief solenoid valve; air should escape at air cleaner-to-air control valve hose.
5) Reconnect by-pass hose at relief solenoid valve. Using throttle, set engine speed at 2500 RPM. Disconnect vacuum sensing tube from switching solenoid valve (Gray color dot).
6) Place finger over air cleaner-to-air control valve hose; air should escape through hose. Reconnect switching solenoid valve vacuum tube.
7) Air should not escape at air cleaner-to-air control valve

Copyright © 1998 Mitchell Repair Information Company, LLC
Sunday, August 26, 2001 04:57PM

hose. If air control valve does not respond as described, replace air control valve.

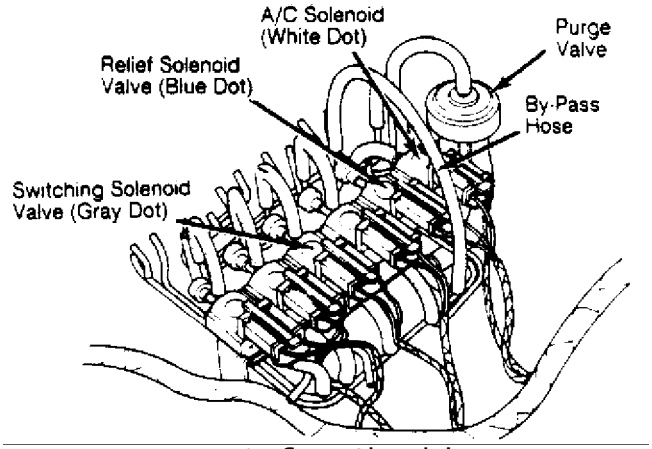

Fig. 2: Hose Arrangement for Checking Air Control Valve Operation

RELIEF SOLENOID VALVE TEST

1) Disconnect vacuum sensing tubes from relief solenoid valve and vacuum pipe. Blow through solenoid valve from vacuum sensing tube "B" in Fig. 3. Air should pass through valve and escape from front port.

2) Disconnect electrical connector from relief solenoid valve and connect battery power to solenoid terminals. Blow through vacuum hose again. Air should pass through valve and escape through air filter. If valve does not respond as described, replace valve.

Copyright © 1998 Mitchell Repair Information Company, LLC
Sunday, August 26, 2001 04:57PM

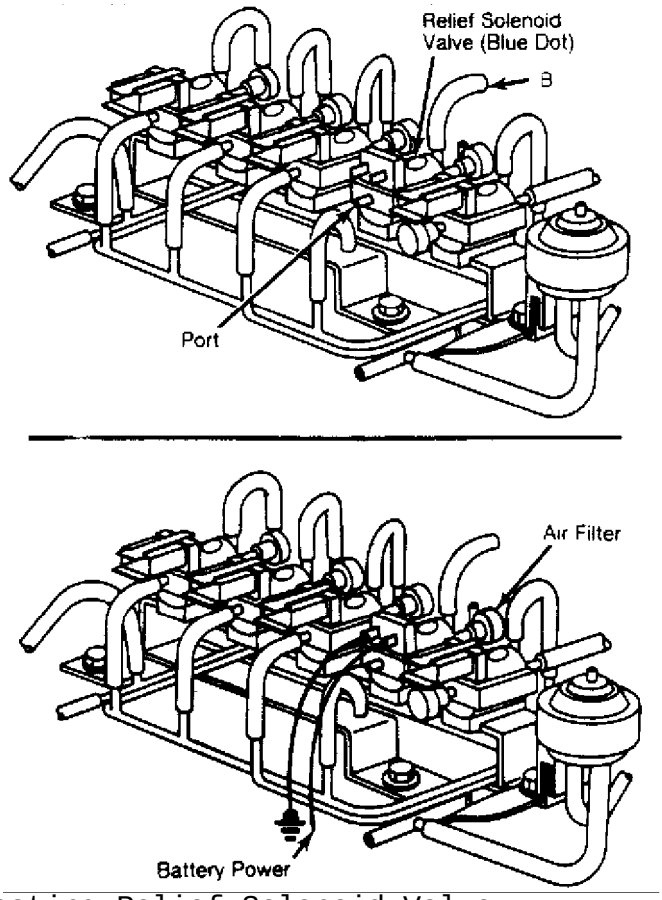

Fig. 3: Testing Relief Solenoid Valve

RELIEF SOLENOID VALVE SIGNAL CHECK TEST

1) Warm engine to normal operating temperature. Connect tachometer to engine. Connect voltmeter to relief solenoid valve connector terminals.

2) Disconnect connector from throttle sensor and connect a jumper wire between terminals "A" and "C" of connector. See Fig. 4. Start engine and increase engine speed.

3) Voltmeter should read near 0V when engine speed is 3600-4400 RPM. Set engine speed at 2000 RPM. Disconnect No. 2 water temperature switch (located on radiator) electrical connector.

4) Slowly decrease engine speed from 2000 RPM and watch voltmeter. When engine speed is 1000-1200 RPM, voltmeter should read near 12V. Decrease engine speed to idle.

5) Remove jumper wire from throttle sensor connector and reconnect throttle sensor connector. Slowly increase engine speed from idle (with throttle) and watch voltmeter. The voltmeter should read 12V at any engine speed.

6) The voltmeter should read near 0V if engine is accelerated quickly. Disconnect electrical connector from No. 1 water temperature switch (located behind alternator) and connect a jumper wire between both terminals of connector.

Copyright © 1998 Mitchell Repair Information Company, LLC
Sunday, August 26, 2001 04:57PM

7) Pull out choke knob and check that NO current flows to relief solenoid valve. Push choke knob back in. Reconnect No. 1 and No. 2 water temperature switch and disconnect jumper wire.

8) Remove passenger seat and fold back carpeting to expose heat hazard sensor wiring. Disconnect heat hazard sensor connector and connect a jumper wire to both terminals in the connector.

9) Voltmeter should read 0V at any engine speed. Reconnect heat hazard sensor. If relief solenoid valve does not operate as outlined, check heat hazard sensor and retest relief solenoid valve.

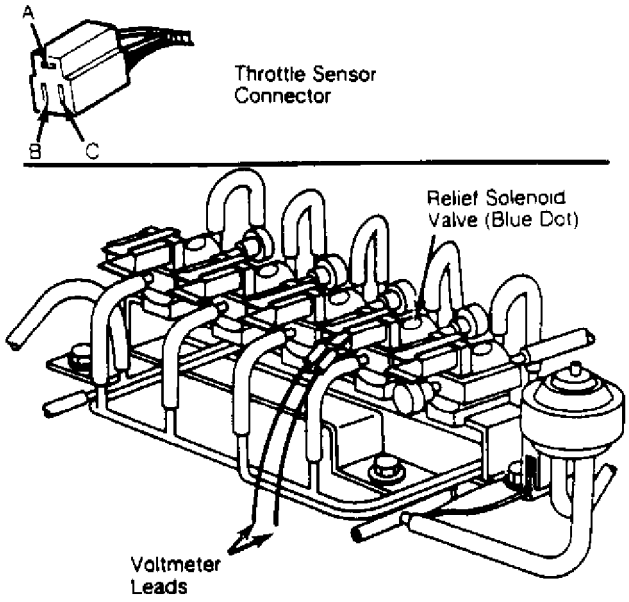

Fig. 4: Testing Relief Solenoid Valve Signal

SWITCHING SOLENOID VALVE TEST

1) Disconnect vacuum sensing tubes from switching solenoid valve and vacuum pipe. Blow through switching valve from vacuum sensing tube "B" in Fig. 5. Air should pass through valve and escape from front port.

2) Disconnect electrical connector from switching valve and connect battery power to terminals on valve.

3) Blow through hose again; air should pass through valve and escape through filter at rear of valve. If switching valve does not respond as described, replace switching solenoid valve.

SWITCHING SOLENOID VALVE SIGNAL CHECK TEST

1) Warm engine to normal operating temperature. Connect tachometer to engine. Connect voltmeter to negative terminal (Light Gray) of switching solenoid valve connector.

2) Disconnect throttle sensor connector and connect a jumper wire between terminals "A" and "C" of connector. Start engine and run at 2000 RPM. Voltmeter should read near 0V. Slowly decrease engine

Copyright © 1998 Mitchell Repair Information Company, LLC
Sunday, August 26, 2001 04:57PM

speed and watch voltmeter.

3) Voltmeter should read near 12V when engine speed is 1000-1200 RPM. Disconnect No. 1 water temperature switch (located behind alternator) and connect a jumper wire between both terminals in connector.

4) Pull out choke knob and check that voltmeter reads near 12V. Push choke knob back in. Remove jumper wire from throttle sensor connector and reconnect connector.

5) Slowly increase engine speed from idle. Voltmeter should read near 12V at any engine speed. Quickly accelerate engine; there should be NO current flow to switching valve. If switching valve does not respond as outlined, replace switching solenoid valve.

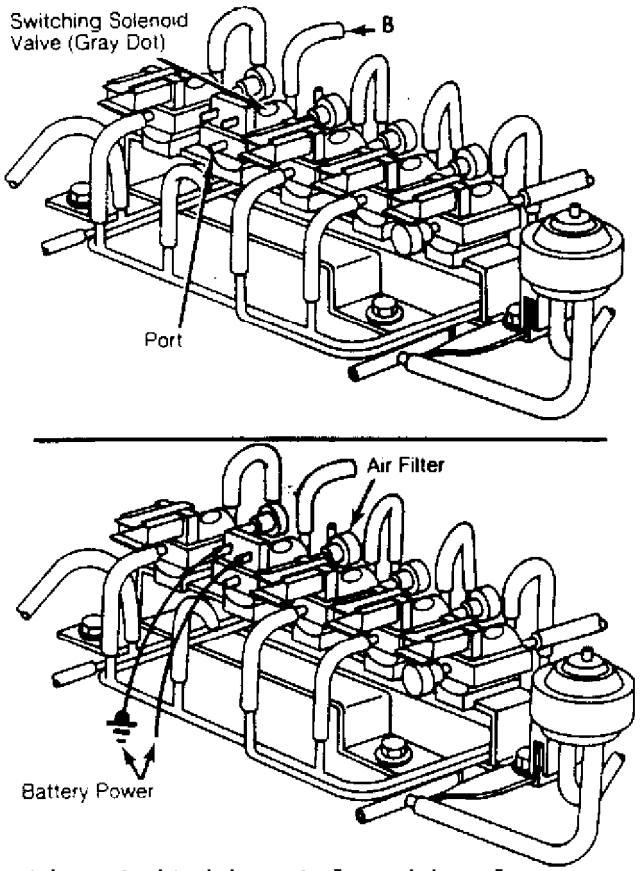

Fig. 5: Testing Switching Solenoid Valve

HEAT HAZARD SENSOR TEST

1) Turn ignition on; "Overheat Exh. System" warning light should glow. Start engine and warning light should go out. Remove passenger seat, fold back carpeting and disconnect heat hazard sensor connector.

2) Warning light should glow when jumper wire is connected to both terminals of the connector. If warning light does not respond as outlined, remove and test sensor. Wrap sensor and a thermometer in aluminum foil (electrical connector must be exposed for access).

Copyright © 1998 Mitchell Repair Information Company, LLC
Sunday, August 26, 2001 04:57PM

3) Place sensor and thermometer (wrapped in aluminum foil) in container filled with oil. Place a second thermometer in container of oil. See Fig. 6.

4) Connect a battery and test lamp to sensor connector. Test lamp should glow. Gradually heat oil. Test lamp should go OFF when temperature inside aluminum foil is 248-284øF (120-140øC). If sensor does not respond as outlined, replace heat hazard sensor.

NOTE: Do not heat oil above 302øF (150øC).

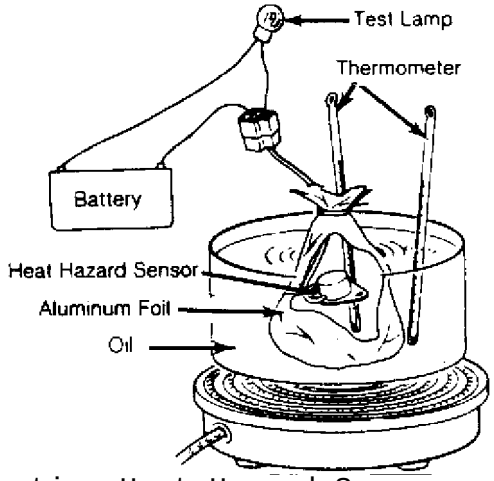

Fig. 6: Testing Heat Hazard Sensor

END OF ARTICLE

AUXILIARY CONTROL DEVICE
Article Text

Copyright © 1998 Mitchell Repair Information Company, LLC
Sunday, August 26, 2001 04:58PM

ARTICLE BEGINNING

1983 Exhaust Emission Systems
MAZDA RX7 AUXILIARY CONTROL DEVICE

DESCRIPTION

In addition to the regular exhaust emission control systems previously described, RX7 models use an auxiliary control device. This unit works in conjunction with emission systems previously explained.

The components of the auxiliary control device include the control unit, choke switch, choke magnet, choke relay, and 2 water temperature switches.

TESTING

CONTROL UNIT

1) Engine must be at normal operating temperature and transmission in Neutral (Park on A/T models). Check the control unit according to Control Unit Testing chart.

2) When more than 1 Checking Condition is listed, all conditions must be checked. Connect the negative probe of voltmeter to terminal "P" and positive probe to other terminals as described.

3) If a problem exists, check circuit to which terminal is connected. If circuit is normal, replace control unit.

NOTE : Disconnect electrical coupler from throttle sensor on carburetor and connect a known good throttle sensor to coupler.

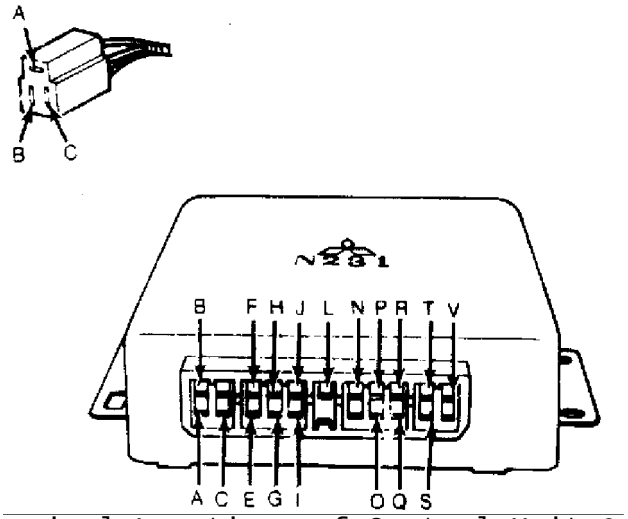

Fig. 1: Terminal Locations of Control Unit & Throttle Sensor Unit is located under left side of dashboard.

AUXILIARY CONTROL DEVICE
Article Text (p. 2)

Copyright © 1998 Mitchell Repair Information Company, LLC
Sunday, August 26, 2001 04:58PM

CHOKE RELAY

1) Disconnect coupler from relay. With engine off and no power applied, check continuity of terminals.
2) There should be continuity between No. 1 and No. 2. There should be no continuity between No. 3 and No. 4.
3) Connect a wire from battery positive post to terminal No. 6 and battery negative post to terminal No. 5. There should be continuity between No. 3 and No. 4. There should be no continuity between No. 1 and No. 2.

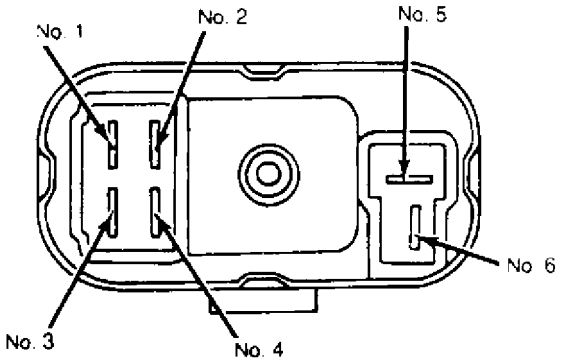

Fig. 2: Choke Relay Terminal Locations

CHOKE SWITCH

1) Unplug connector from choke switch. Check continuity between numbered terminals in connector using an ohmmeter.
2) Continuity should exist between terminals No. 3 and No. 7 when choke knob is pulled to about 0.4" (10 mm.). Continuity should exist between terminals No. 6 and No. 8 when choke knob is at any position. See Fig. 3 for terminal locations.

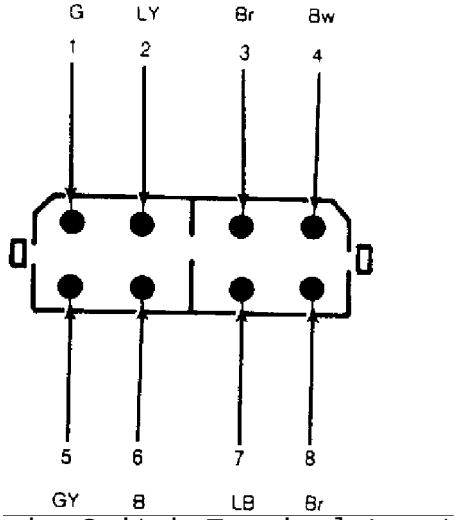

Fig. 3: Choke Switch Terminal Locations

WATER TEMPERATURE SWITCHES

Copyright © 1998 Mitchell Repair Information Company, LLC
Sunday, August 26, 2001 04:58PM

No. 1 Switch

1) Remove switch from water pump housing. Place switch in water with a thermometer. Connect ohmmeter to switch connector and gradually heat water.

2) Continuity should not exist between terminals when temperature reaches 146-170øF (63-77øC). If switch does not respond as described, replace No. 1 water temperature switch.

No. 2 Switch

1) Remove switch from lower radiator tank and perform same test as for No. 1 water temperature switch.

2) Continuity should not exist between terminals until temperature reaches 52-66øF (12-18øC). If switch does not respond as described, replace No. 2 water temperature switch.

AUXILIARY CONTROL DEVICE
Article Text (p. 4)

Copyright © 1998 Mitchell Repair Information Company, LLC
Sunday, August 26, 2001 04:58PM

Terminal	Connection	Voltage	Checking Condition
A	Trailing Ignition Coil	12V (pals signal)	Engine running at idle speed.
B	Ignition Key Switch	Approx. 12V	Ignition key switch turned on.
C	Carburetor Heater	Approx. 12V	Engine operating and choke knob pulled out fully.
E	Throttle Sensor	7.7-8.5V	Ignition key switch turned on.
F	Switching Solenoid Valve	0V	Unplug the connector from the throttle sensor and connect a jumper wire to "A" and "C" terminals in the connector. *See Fig. 1.* Engine speed must be more than 1000 RPM.
H or V	Starting Motor	0V	Ignition key switch turned on. On automatic transmission models, shift selector to "P" or "N".
J	No. 2 Water Temperature Switch	0V	Engine must be operating temperature and at idle.
L	Air Conditioning Solenoid Valve	0V	Turn on air conditioning switch. Engine speed must be less than 1000 RPM.
N	Relief Solenoid Valve	0V	**1)** Disconnect the connector from the throttle sensor and connect a jumper wire to "A" and "C" terminals in the connector. Engine speed must be more than 3600 RPM. **2)** Unplug the connector from the No. 2 water temperature switch. Unplug the connector from the throttle sensor and connect a jumper wire from "A" to "C" terminals. Engine speed must be more than 1000 RPM. **3)** Unplug the connector from the heat hazard sensor and connect a jumper wire to both terminals in the connector. Engine must be at idle speed.
O	Heat Hazard Sensor	0V	Unplug the connector from the heat hazard sensor and connect a jumper wire to both terminals in the connector. Engine must be at idle speed.
P	Ground	.....	.....
Q	Shutter Solenoid Valve	0V	**1)** Unplug the connector from the throttle sensor and connect a jumper wire to "A" and "C" terminals in the connector. Engine speed must be less than 1000 RPM. **2)** On automatic transmission models, unplug the throttle sensor connector while quickly desreasing engine speed.
R	Choke Switch	Approx. 12V	Engine running at idle speed.
S	Leading Vacuum Control Solenoid Valve	0V	**1)** Unplug connector from the No. 1 water temperature switch and connect a jumper wire to both terminals in the connector. Set engine speed to 2000 RPM. **2)** Engine speed be less than 1000 RPM. **3)** On automatic transmission models, shift selector to "P" or "N". Engine speed must be less than 1000 RPM. **4)** When engine speed is quickly decreased.
T	Trailing Vacuum Control Solenoid Valve	Approx. 1V	**1)** When engine speed is less than 2500 RPM. **2)** Quickly decreasing engine speed from 3000 RPM. **3)** Unplug the connector from the No. 2 water temperature switch on the radiator and the engine speed is less than 1000 RPM.

Fig. 4: Control Unit Testing

END OF ARTICLE

CARBURETOR - NIKKI 4-BBL
Article Text

Copyright © 1998 Mitchell Repair Information Company, LLC
Sunday, August 26, 2001 05:52PM

ARTICLE BEGINNING

1983 Nikki Carburetors
NIKKI 4-BARREL

Mazda RX7

DESCRIPTION

Carburetor is of 4-barrel, 2-stage design. Primary stage includes idle system, slow speed circuit, accelerator pump system and main metering system. In addition, Federal models are equipped with a sub-zero starting device which admits fluid into the primary stage.

Secondary stage contains secondary vacuum diaphragm operating system, stepping circuit and main metering system. Choking is accomplished through a semi-automatic choke. Other features include a deceleration control system, automatic choke return, hot start assist, idle compensation and dashpot (manual transmission).

ADJUSTMENTS

NOTE: For all on-vehicle adjustments not covered in this article, see the appropriate TUNE-UP SERVICE PROCEDURES article.

FLOAT LEVEL

1) Before assembling air horn to main body, adjust float level. Invert air horn and allow float to hang by its own weight.

2) Measure clearance between float and air horn gasket. See Fig. 1. Clearance should be .61-.65" (15.5-16.5 mm). If not within specifications, bend float seat to adjust.

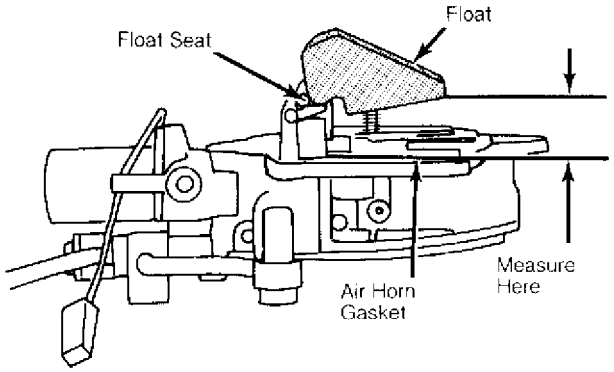

Fig. 1: Float Level Adjustment

FLOAT DROP

Turn air horn upright and allow float to hang by its own weight. Measure distance between bottom of float and air horn gasket. See Fig. 2. Distance should be 1.98-2.02" (50.5-51.5 mm). If not,

Copyright © 1998 Mitchell Repair Information Company, LLC
Sunday, August 26, 2001 05:52PM

bend float stop to adjust.

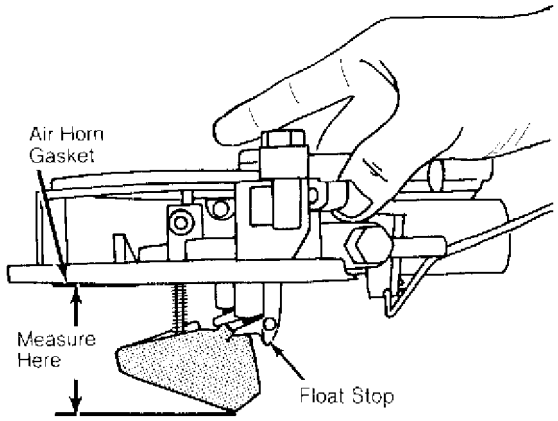

Fig. 2: Float Drop Adjustment

CHOKE LINKAGE (FAST IDLE OPENING ANGLE)

Close choke valve fully and measure clearance between primary throttle valve and wall of throttle bore. Set clearance to .040-.047" (1.0-1.2 mm) by bending fast idle rod. See Fig. 3.

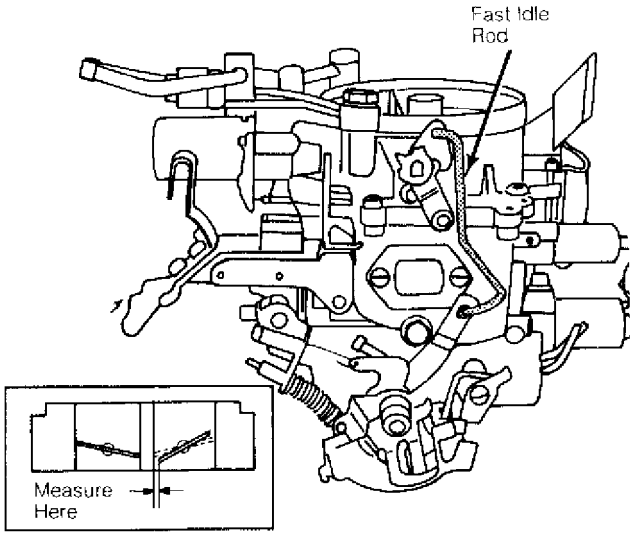

Fig. 3: Choke Linkage (Fast Idle Opening Angle)
Bend fast idle rod to adjust.

CHOKE VALVE OPENING ANGLE

NOTE: Choke diaphragm No. 1 is the dual diaphragm assembly, choke diaphragm No. 2 is the single diaphragm assembly.

1) Disconnect both vacuum sensing tubes from No. 1 vacuum diaphragms. Pull choke lever link out fully and hold in place. Apply more than 19.7 in. Hg to inner diaphragm. See Fig. 4.
2) Clearance should be .22-.24" (5.5-6.2 mm). Apply more than 19.7 in. Hg to both diaphragms and measure clearance again.

Copyright © 1998 Mitchell Repair Information Company, LLC
Sunday, August 26, 2001 05:52PM

Clearance should be .45-.51" (11.5-13.0 mm).

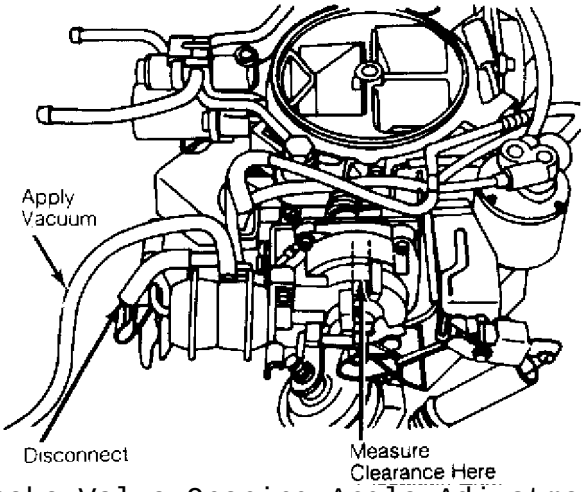

Fig. 4: Choke Valve Opening Angle Adjustment

NO. 2 CHOKE DIAPHRAGM

1) Disconnect vacuum sensing tube from No. 2 vacuum diaphragm. Pull choke lever link out fully and hold in place. Choke valve should close fully. (Cool bi-metal coil if necessary).
2) Apply more than 19.7 in. Hg to vacuum diaphragm and measure clearance between choke valve and wall of air horn. Clearance should be .057-.070" (1.46-1.80 mm).

CHOKE DIAPHRAGM OPERATION (NO. 1 & NO. 2 DIAPHRAGMS)

Remove air cleaner. Start engine and run at idle. Disconnect both vacuum sensing tubes from No. 1 diaphragm and one from the No. 2 diaphragm. Each diaphragm shaft should move outward from diaphragm.

CHECKING CHOKE DELAY VALVE OPERATION

NOTE: Automatic transmission must be in Neutral.

1) Warm engine to normal operating temperature. Stop engine and remove air cleaner assembly. Disconnect inner vacuum sensing tube from choke diaphragm No. 1.
2) Start the engine and run at idle speed. Diaphragm shaft should move fully inward within 10-20 seconds after reconnecting vacuum sensing tube to choke diaphragm.

Copyright © 1998 Mitchell Repair Information Company, LLC
Sunday, August 26, 2001 05:52PM

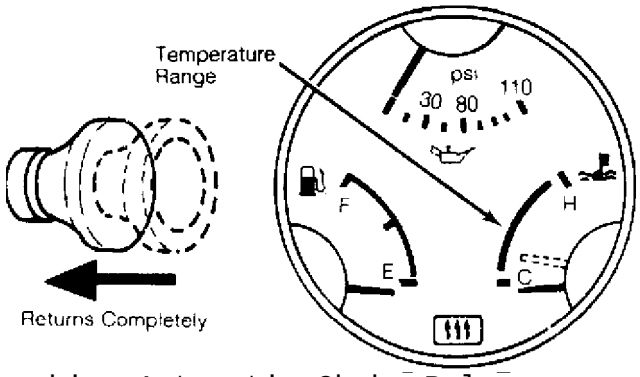

Fig. 5: Checking Automatic Choke Release

CHECKING AUTOMATIC CHOKE RELEASE

1) With engine cold and ignition "OFF", pull choke knob out fully and release. Knob should return automatically and freely. Connect tachometer to engine.
2) Start engine and set engine speed at 2000 RPM with choke knob. As engine temperature reaches range indicated in Fig. 5., choke knob should return automatically and freely.

CHECKING CARBURETOR HEATER

1) Disconnect electrical connector from No. 1 water temperature switch and connect jumper wire to both terminals of connector. Connect tachometer to engine.
2) Disconnect carburetor heater electrical connector and connect voltmeter to connector. Start engine and set engine speed at 2000 RPM with choke knob.
3) With choke knob pulled out, current should flow to carburetor heater lead. Current should not flow to heater lead with choke knob pushed in.
4) Connect ohmmeter between carburetor heater lead and carburetor body. If ohmmeter shows no movement, carburetor heater is defective and must be replaced.

HOT START ASSIST CABLE

1) Remove lock spring of hot start assist cable from cable bracket. Slowly pull outer cable until hot start lever just touches stop lever.
2) Check clearance between cable bracket and lock nut on cable. See Fig. 6. Clearance should be .02-.08" (0.5-2.0 mm). Adjust by turning lock nut, then install lock spring securely on cable.

Copyright © 1998 Mitchell Repair Information Company, LLC
Sunday, August 26, 2001 05:52PM

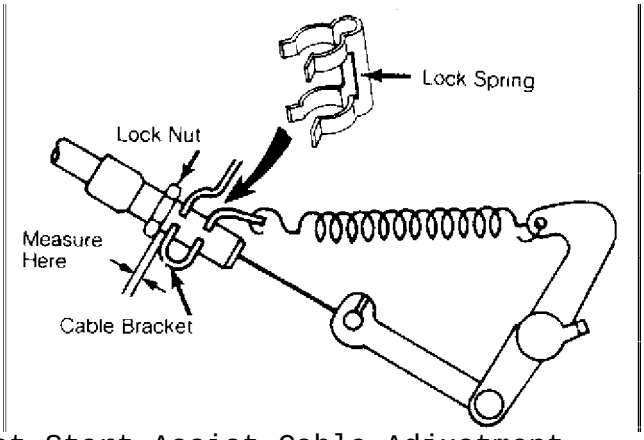

Fig. 6: Hot Start Assist Cable Adjustment

THROTTLE OPENER

A/C Models Only

1) Turn off all accessories. Remove fuel filler cap. Disconnect and plug idle compensator tube at air cleaner. Connect tachometer to engine and warm engine to normal operating temperature.

2) Disconnect electrical connector from air switching solenoid valve (Gray color). Disconnect and plug vacuum sensing tubes from leading vacuum control units on distributor.

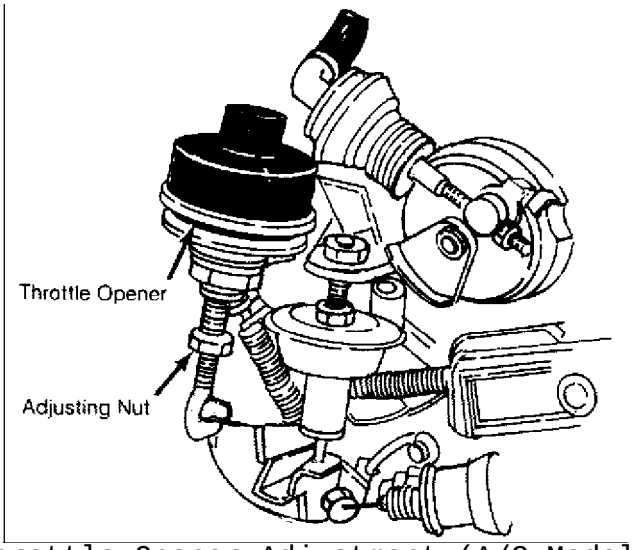

Fig. 7: Throttle Opener Adjustment (A/C Models Only)

3) Turn off air conditioner switch. Disconnect electrical connector from air conditioner solenoid. Connect battery power to one terminal in connector and ground other terminal.

4) Throttle opener should operate and engine speed should increase to 1150-1250 RPM in Neutral. If engine speed is not to specification, turn adjusting nut shown in Fig. 7.

CHECKING ALTITUDE COMPENSATOR

Copyright © 1998 Mitchell Repair Information Company, LLC
Sunday, August 26, 2001 05:52PM

NOTE: Altitude compensator must be checked at altitudes of 1640-4920 feet.

1) Remove air cleaner and start engine. Engine should run smoothly at specified idle. Place finger over slow port on carburetor air horn; idle speed should drop.
2) If idle speed did not drop, remove compensator valve and blow through both ports. Air should pass through compensator valve. If not replace altitude compensator valve.

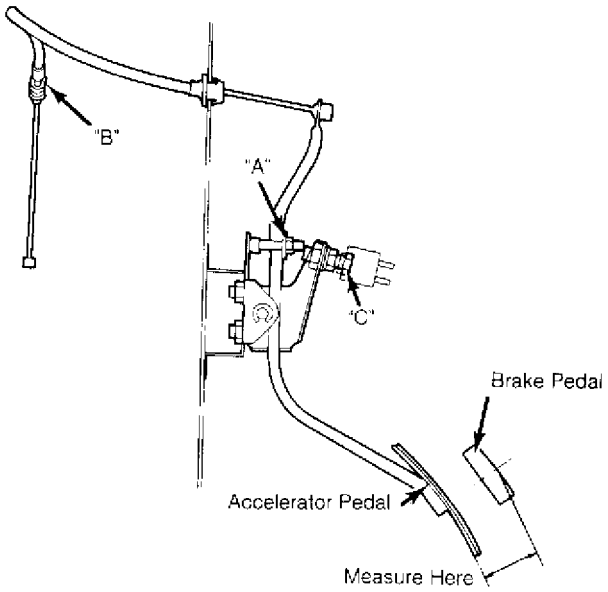

Fig. 8: Adjusting Accelerator Cable and Pedal Height

ACCELERATOR CABLE ADJUSTMENT

1) Check accelerator pedal position. Pedal should be 1.5-1.9" (37-47 mm) lower than brake pedal. See Fig. 8. If necessary, adjust nut "A" to obtain correct position.
2) Cable free play at carburetor should be .04-.12" (1-3 mm). To adjust free play, adjust nut "B". Depress accelerator to floor and check that throttle valves are wide open. If necessary, adjust stop bolt "C".

OVERHAUL

NOTE: Disassembly and assembly procedures will vary from vehicle to vehicle due to emissions equipment and type of transmission. Some carburetors may not have all parts referred to in the following procedures.

DISASSEMBLY

1) Remove vacuum sensing tubes for altitude compensator

Copyright © 1998 Mitchell Repair Information Company, LLC
Sunday, August 26, 2001 05:52PM

valve and choke delay valve. Remove choke heater lead, choke diaphragm No. 2 vacuum sensing tube and altitude compensator valve.

2) Remove throttle opener and bracket assembly, No. 1 choke diaphragm vacuum sensing tube, dashpot diaphragm and bracket assembly (Man. Trans. only) and throttle return spring.

3) Remove sub-return spring, return spring bracket, bi-metal spring housing and bracket assembly. Remove split pin and fast idle rod, hot start assist lever spring and bracket assembly and choke lever.

4) Remove the choke return diaphragm and bracket, No. 2 choke diaphragm and air horn assembly from main body. Disconnect float pin and remove float, needle valve, spring, valve stem and retainer.

5) From main body, remove accelerator pump rod, secondary throttle valve rod, throttle sensor and main body attaching bolts. Remove main body from throttle body.

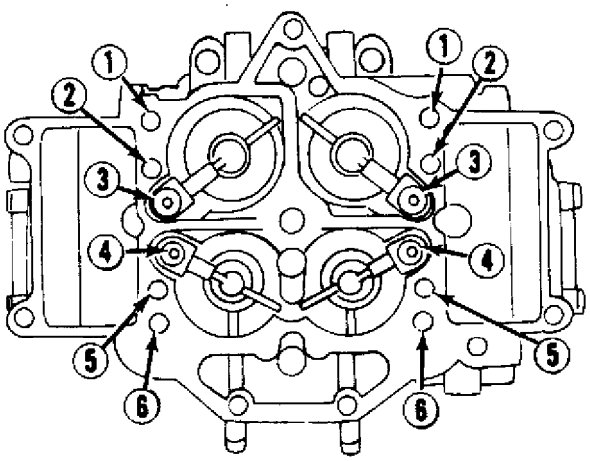

1 - Secondary No. 2 Step Air Bleed
2 - Secondary Step Jet
3 - Secondary Main Air Bleed
4 - Primary Main Air Bleed
5 - Primary Slow Jet
6 - Primary No. 2 Slow Air Bleed

Fig. 9: Removing Jets and Air Bleeds

6) Remove secondary throttle attaching screws, cover, return spring, pin and clip, diaphragm, housing and gasket. Remove "E" clip, washer and shaft, accelerator pump lever, attaching screws, cover, diaphragm and return spring.

7) From main body, remove accelerator pump injection screw, nozzle, gasket, weight, outlet check valve, check valve seat, weight and inlet check valve. Remove retainer, blind plug and washer, primary main jet and secondary main jet.

8) Remove air bleeds and jets. See Fig. 9. Using a hacksaw, remove idle limiter cap by cutting through limiter cap, 0.4" (10 mm) from cap end. Remove and discard mixture adjusting screw and spring.

CLEANING & INSPECTION

Copyright © 1998 Mitchell Repair Information Company, LLC
Sunday, August 26, 2001 05:52PM

1) Wash all parts in clean solvent and clear all passages using compressed air. Never use wire for cleaning jets, orifices or passages. Inspect air horn, main body and throttle body for cracks or breakage.

2) Inspect choke shaft and throttle shaft for wear, linkage and connecting rods for bends, and return springs for damage. Inspect float, needle valve and seat and strainer for damage.

3) To check air vent solenoid for proper operation, apply battery voltage to solenoid valve, valve stem should pull into valve body. Replace solenoid if it fails to operate properly.

REASSEMBLY

1) To reassemble, reverse the disassembly procedure, using new gaskets. Avoid mixing primary and secondary system parts having similar shape. When installing new mixture screw, seat lightly and back out 3 turns for initial adjustment.

2) When installing bi-metal spring housing, fit choke shaft lever to bi-metal spring by closing choke valve and pulling vacuum diaphragm shaft. Before installing air horn, make necessary float adjustments.

ADJUSTMENT SPECIFICATION

CARBURETOR ADJUSTMENT SPECIFICATIONS

Application	Specification
RX7	
Float Level In. (mm)	.61-.65 (15.5-16.5)
Float Drop In. (mm)	1.98-2.02 (50.5-51.5)
Choke Linkage In. (mm)	.040-.047 (1.0-1.2)
Accel. Cable Free Play In. (mm)	.04-.12 (1.0-1.3)
Choke Valve Opening In. (mm)	.22-.24 (5.5-6.2)

END OF ARTICLE

CHOKE - ELECTRIC ASSIST
Article Text

Copyright © 1998 Mitchell Repair Information Company, LLC
Sunday, August 26, 2001 04:58PM

ARTICLE BEGINNING

1983 Exhaust Emission Systems
MAZDA RX7 CHOKE RETURN & HOT START ASSIST SYSTEMS

DESCRIPTION

The Choke Return system prevents the choke knob from being left unreturned to prevent overheating of the exhaust system. The Hot Start Assist system opens the throttle valve partially during cranking of warm engine to optimize air/fuel mixture to improve starting.

The choke return system components include No. 1 water temperature switch, choke relay, choke magnet and choke switch. The hot start assist system components include No. 1 water temperature switch, hot start relay and hot start motor.

OPERATION

CHOKE RETURN SYSTEM

When cold engine is started with assist of choke knob, the knob is held in pulled position by the choke magnet. Full release of choke knob is achieved as engine coolant temperature reaches 158øF (70øC). The No. 1 water temperature switch stops the flow of electrical current to magnet and the choke knob is released.

HOT START ASSIST SYSTEM

During cranking of a warm engine, the No. 1 water temperature switch provides power to the hot start relay when starter is engaged. When hot start relay is activated, the hot start motor pulls the hot start cable which opens the throttle valve.

CHOKE - ELECTRIC ASSIST
Article Text (p. 2)

Copyright © 1998 Mitchell Repair Information Company, LLC
Sunday, August 26, 2001 04:58PM

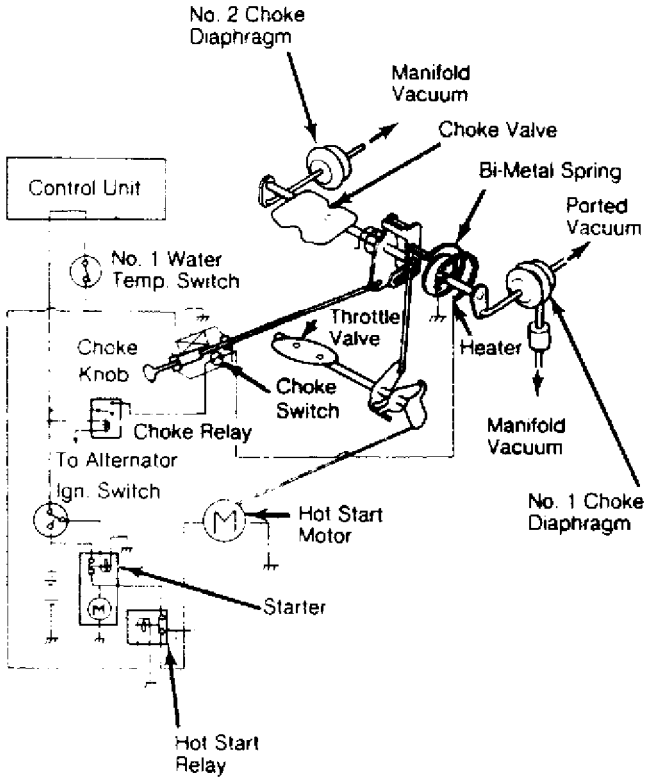

Fig. 1: Choke Return and Hot Start Assist Systems

TESTING

CHOKE RETURN SYSTEM

1) With engine cold and ignition switch "OFF", pull choke knob out fully. Choke knob should return automatically.

2) Connect tachometer to engine. Start engine and set engine speed at 2000 RPM with choke knob. With engine running, choke knob should automatically return when engine temperature indicator is in position shown in Fig. 2.

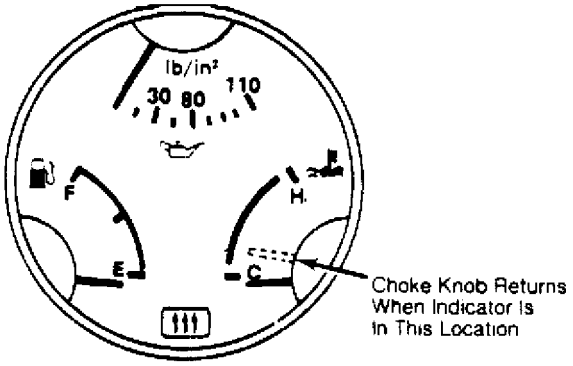

Fig. 2: Engine Temperature Indication for Release of Choke Knob

Copyright © 1998 Mitchell Repair Information Company, LLC
Sunday, August 26, 2001 04:58PM

CHOKE MAGNET

Disconnect electrical connector from choke switch. Using an ohmmeter, check continuity between terminals. Continuity should exist between terminals No. 6 and No. 8. See Fig. 3.

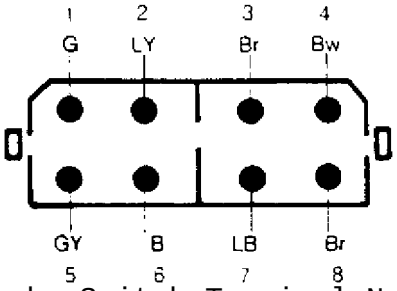

Fig. 3: Choke Switch Terminal Numbering

HOT START ASSIST SYSTEM

NOTE: Before replacing hot start motor or relay, check No. 1 water temperature switch as outlined in "Mazda RX7 Auxiliary Control Device" article in this section.

1) Inspect hot start assist cable and linkage for proper installation, no binding or sticking, and full return. Warm engine to normal operating temperature and stop engine.
2) Disconnect leading and trailing primary wires from ignition coils. Crank engine. Hot start lever should open throttle valve. If hot start system does not respond as outlined, check hot start assist relay.

HOT START ASSIST RELAY

1) Disconnect electrical connector from hot start relay. Using an ohmmeter, check continuity between terminals. Continuity should exist between terminals No. 1 and No. 5 without power applied. Continuity should not exist between terminals No. 1 and No. 3 without power applied.
2) Connect battery power to relay (positive to terminal No. 2, negative to terminal No. 4). With battery power applied, continuity should exist between terminals No. 1 and No. 3. Continuity should not exist between terminals No. 1 and No. 5 with power applied.

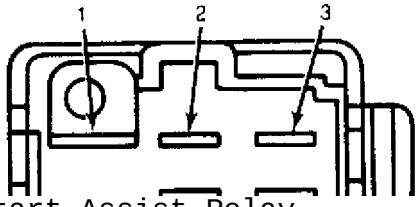

Fig. 4: Hot Start Assist Relay Terminal Numbering

CHOKE - ELECTRIC ASSIST
Article Text (p. 4)

Copyright © 1998 Mitchell Repair Information Company, LLC
Sunday, August 26, 2001 04:58PM

HOT START ASSIST
CABLE ADJUSTMENT

1) Remove hot start assist cable lock spring from cable bracket. Slowly pull outer cable until hot start lever just touches stopper lever. Check clearance between cable bracket and cable lock nut.

2) If clearance is not .02-.08" (0.5-2.0 mm), adjust clearance by turning lock nut. Recheck clearance and install lock spring.

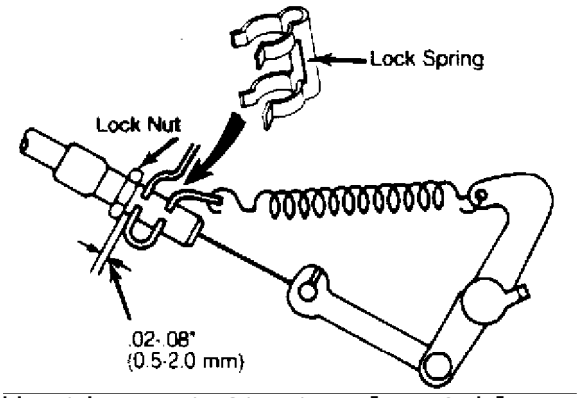

Fig. 5: Adjusting Hot Start Relay Cable

END OF ARTICLE

DECELERATION CONTROL SYSTEM
Article Text

Copyright © 1998 Mitchell Repair Information Company, LLC
Sunday, August 26, 2001 04:58PM

ARTICLE BEGINNING

1983 Exhaust Emission Systems
MAZDA RX7 DECELERATION CONTROL SYSTEM

DESCRIPTION

The Deceleration system is designed to maintain a balanced air/fuel mixture during deceleration. System consists of 2 anti-afterburn valves, shutter solenoid valve, coasting/shutter valve, throttle sensor, dashpot (manual transmission models) and connecting hoses and wiring.

OPERATION

The No. 2 anti-afterburn valve (located below air cleaner) is actuated by the shutter solenoid valve to supply additional air from air cleaner to intake manifold at initial deceleration to prevent afterburning of fuel. The coasting/shutter valve work together to supply air (coasting valve) and fuel (shutter valve) during deceleration to prevent backfiring.

TESTING

NO. 1 ANTI-AFTERBURN VALVE

1) Warm engine to normal operating temperature and ensure engine operates smoothly at idle. Stop engine. Disconnect air pump-to-air control hose at air pump.
2) Disconnect electrical connectors from relief solenoid valve (Blue color dot) and switching solenoid valve (Gray color dot). Start engine and run at idle. Place finger over air pump-to-air control hose.
3) Air should not be drawn in and idle speed should not change. Disconnect vacuum sensing tube "A". The idle speed should drop and return to normal idle when tube is connected. If valve does not respond as outlined, replace No. 1 anti-afterburn valve.

NOTE: Before replacing No. 1 anti-afterburn valve, check auxiliary control unit as outlined in "Mazda RX7 Auxiliary Control Device" article in this section. Also check relief solenoid valve and switching solenoid valve as described in "Mazda RX7 Air Injection System" article in this section.

Copyright © 1998 Mitchell Repair Information Company, LLC
Sunday, August 26, 2001 04:58PM

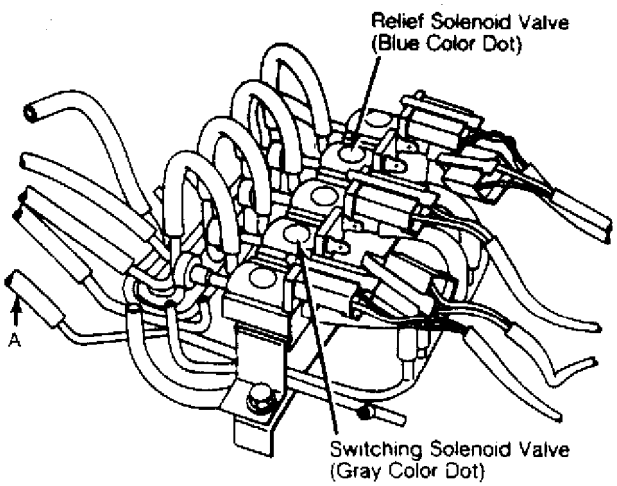

Fig. 1: Testing No. 1 Anti-Afterburn Valve

NO. 2 ANTI-AFTERBURN VALVE

1) Warm engine to normal operating temperature. Disconnect No. 2 anti-afterburn valve-to-air cleaner hose at air cleaner. Place finger over hose and ensure air is not drawn into hose.
2) Disconnect vacuum sensing hose from No. 2 anti-afterburn valve. Air should not be drawn into hose. Connect vacuum sensing hose to valve; air should be drawn into anti-afterburn valve-to-air cleaner hose for 3 seconds.
3) If air is drawn for more than 3 seconds or no air is drawn, replace No. 2 anti-afterburn valve.

THROTTLE SENSOR

1) Warm engine to normal operating temperature. Stop engine. Connect tachometer to engine. Disconnect throttle sensor electrical connector, located on right side of engine (Black/Yellow and Green/Black wires).
2) Using 2 voltmeters, connect positive lead of one voltmeter to Light Green/Yellow wire terminal of throttle sensor check connector.
3) Connect positive lead of other voltmeter to Green/Yellow wire terminal of throttle sensor connector. Connect negative terminals of voltmeters to good ground. See Fig. 2.

Copyright © 1998 Mitchell Repair Information Company, LLC
Sunday, August 26, 2001 04:58PM

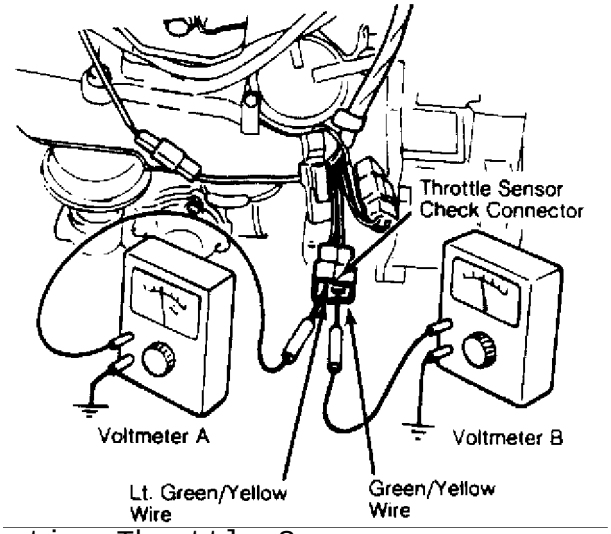

Fig. 2: Testing Throttle Sensor

4) Start engine and run at 3000 RPM. Quickly decelerate engine. Current should flow to both terminals simultaneously when engine speed is 1000-1200 RPM.

5) If current does not flow to both terminals at the same time, remove cap from throttle sensor adjusting screw and adjust throttle sensor.

6) Adjust timing of current flow to voltmeter "A" in Fig. 2 by turning throttle sensor adjusting screw.

7) Turning screw in causes current to flow to Light Green/Yellow wire at lower engine speed. After adjustment, install cap on throttle sensor adjusting screw and retest throttle sensor.

SHUTTER SOLENOID VALVE

1) Disconnect vacuum sensing tubes from shutter solenoid valve (Yellow color dot). Blow through solenoid valve through vacuum hose "B" shown in Fig. 3; air should go through valve and escape at front port.

2) Disconnect electrical connector and apply battery power to terminals on solenoid valve. Blow through hose again; air should escape through air filter at rear of solenoid valve. Replace valve if it does not respond as outlined.

Copyright © 1998 Mitchell Repair Information Company, LLC
Sunday, August 26, 2001 04:58PM

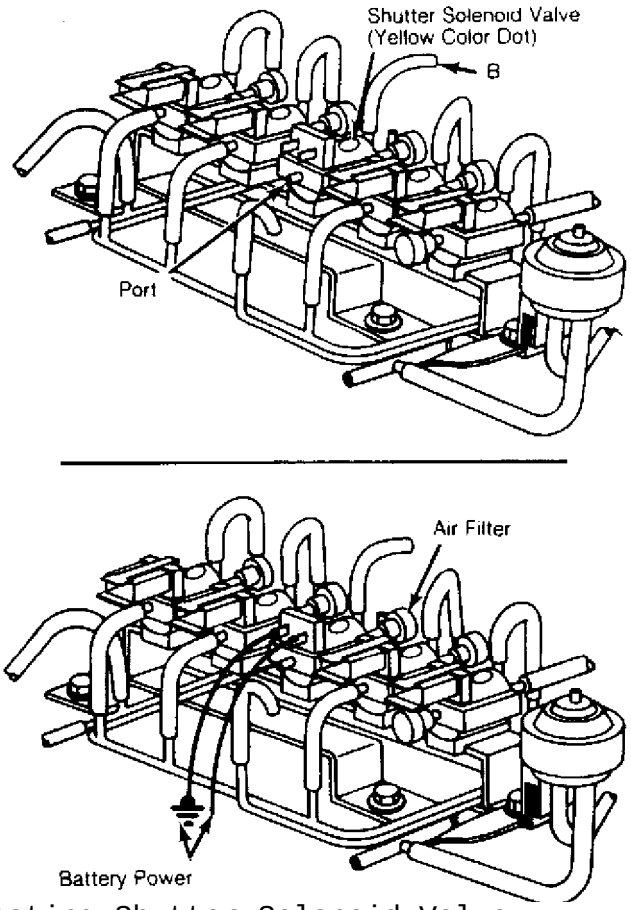

Fig. 3: Testing Shutter Solenoid Valve

SHUTTER SOLENOID VALVE SIGNAL CHECK

1) Warm engine to normal operating temperature. Stop engine. Connect tachometer to engine. Connect voltmeter to negative (Light Green/Yellow) terminal of shutter solenoid valve electrical connector without disconnecting connector.

2) Disconnect throttle sensor electrical connector (Black/Yellow and Green/Black wires). Shift automatic transmission into "P" or "N". Start engine and run at idle.

3) Voltmeter should read 0V at shutter solenoid valve terminals. Disconnect electrical connector from throttle sensor. Voltmeter should read near 12V and engine idle is erratic.

4) Shift automatic transmission into "D". Connect throttle sensor connector disconnected in step 1). Voltmeter should read near 12V.

Copyright © 1998 Mitchell Repair Information Company, LLC
Sunday, August 26, 2001 04:58PM

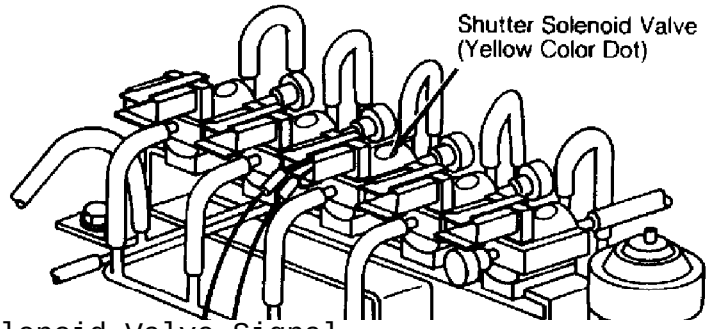

Fig. 4: Testing Shutter Solenoid Valve Signal

5) On automatic transmissions, shift into "P" or "N". Current should NOT flow to solenoid valve terminal at any engine speed. If solenoid valve does not respond as described, replace shutter solenoid valve.

NOTE: Before replacing shutter solenoid valve, check auxiliary control unit as outlined in "Mazda RX7 Auxiliary Control Device" article in this section. Also check relief solenoid valve and switching solenoid valve as described in "Mazda RX7 Air Injection System" article in this section.

COASTING/SHUTTER VALVE

1) Warm engine to normal operating temperature. Stop engine. Disconnect air cleaner-to-coasting valve hose at air cleaner. Start engine and run at idle. Place finger over disconnected hose; air should not be drawn into hose.

2) Disconnect electrical connector from shutter solenoid valve (Yellow dot). Air should be drawn into disconnected hose and idle should fluctuate.

3) At the same time, the coasting valve rod should be pulled into coasting valve about .4" (10mm), opening shutter valve. Replace coasting/shutter valve if it does not respond as outlined.

DASHPOT (MAN. TRANS. ONLY)

1) Remove air cleaner. Checking all vacuum sensing tubes for proper condition and connections. Check that dashpot rod does not bind throttle lever movement.

2) Quickly operate throttle lever fully and make sure dashpot rod extends quickly. Release throttle lever and make sure that throttle lever returns slowly to idle position after it has touched dashpot rod.

3) Connect tachometer to engine. Start engine and warm to operating temperature. Ensure engine idle speed is adjusted to specification. Operate throttle lever until it is away from dashpot rod.

4) Slowly decrease engine speed and check speed at which throttle lever just touches dashpot rod. It should be 3800-4200 RPM.

Copyright © 1998 Mitchell Repair Information Company, LLC
Sunday, August 26, 2001 04:58PM

If not, loosen lock nut and turn dashpot diaphragm to adjust engine speed.

END OF ARTICLE

EMISSION APPLICATION
Article Text

Copyright © 1998 Mitchell Repair Information Company, LLC
Sunday, August 26, 2001 04:58PM

ARTICLE BEGINNING

1983 ENGINE EMISSIONS
Mazda Emission Control Applications

626, GLC, Pickup, RX7

EMISSION CONTROL DEVICE APPLICATIONS

EMISSION CONTROL DEVICE APPLICATIONS TABLE

B2000 2.0L
PCV, AIS, EVAP, OC, EGR, SPK, AI (1), DCS

B2000 2.2L Diesel
PCV, EGR

FWD GLC 1.5L
PCV, EVAP, EGR, ECC, FCO, HIC

RWD GLC 1.5L
PCV, AIS, EVAP, OC, EGR, DCS, HIC

RX7
PCV, AIS, EVAP, TWC, ACD, CRV, DCS, IC, ITCS (2)

626 2.0L
TAC, EVAP, OC, EGR, FCO, HIC

(1) - California only.
(2) - Exc. California only.

ABBREVIATION DEFINITIONS

ABBREVIATIONS DEFINITIONS TABLE

Abbreviation	Description
ACD	Auxiliary Control Device
AI	Air Injection
AIS	Air Injection System
CEC	Computerized Engine Controls
CRV	Coasting Richer Valve
DCS	Deceleration Control System
ECC	Electronic Controlled Carburetor
EVAP	Evaporative Emission Control
EGR	Exhaust Gas Recirculation
FCO	Fuel Cut-Off
HIC	Hot Idle Compensator
IC	Integrated Control

Copyright © 1998 Mitchell Repair Information Company, LLC
Sunday, August 26, 2001 04:58PM

ITCS ..... Ignition Timing Control System
OC ..... Oxyidation Catalyst
O2 ..... Oxygen Sensor
PCV ..... Positive Crankcase Ventilation
SPK ..... Spark
TAC ..... Thermostatic Air Cleaner
TWC ..... Three-Way Catalyst

END OF ARTICLE

FUEL EVAPORATION SYSTEM
Article Text

Copyright © 1998 Mitchell Repair Information Company, LLC
Sunday, August 26, 2001 04:58PM

ARTICLE BEGINNING

1983 Fuel Evaporation Systems
MAZDA ROTARY ENGINE

RX7

DESCRIPTION

System prevents escape of fuel vapors into atmosphere. Components consist of a non-vented fuel tank with integral vapor separator, vapor valve, check and cut valve (located at fuel tank), charcoal canister, air vent solenoid valve, purge valve and connecting hoses.

OPERATION

When engine is not running, fuel vapors formed in fuel tank pass through vapor valve. Those vapors that do not condense to liquid fuel are routed through vent lines to charcoal canister where they are adsorbed. When engine is running, filtered air is drawn into the system through the air cleaner, mixed with gases and vapors that blow by the rotor and are drawn through purge valve and into intake runner to be burned. The purge valve operates as the PCV and check valve.

AIR VENT SYSTEM

An air vent solenoid on carburetor prevents carburetor bowl evaporated fuel from collecting in the intake manifold after hot engine shut off. With ignition off, the solenoid closes an air vent in the carbon canister, trapping the evaporated fuel.

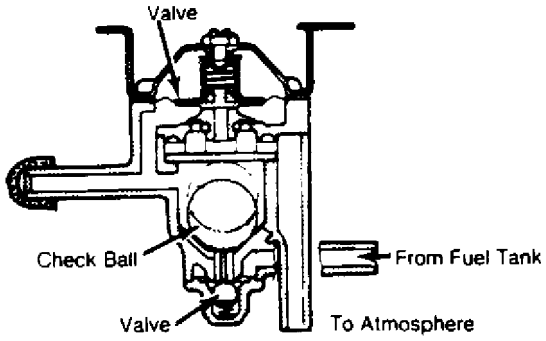

Fig. 1: Mazda RX7 Check and Cut Valve

FUEL EVAPORATION SYSTEM
Article Text (p. 2)

Copyright © 1998 Mitchell Repair Information Company, LLC
Sunday, August 26, 2001 04:58PM

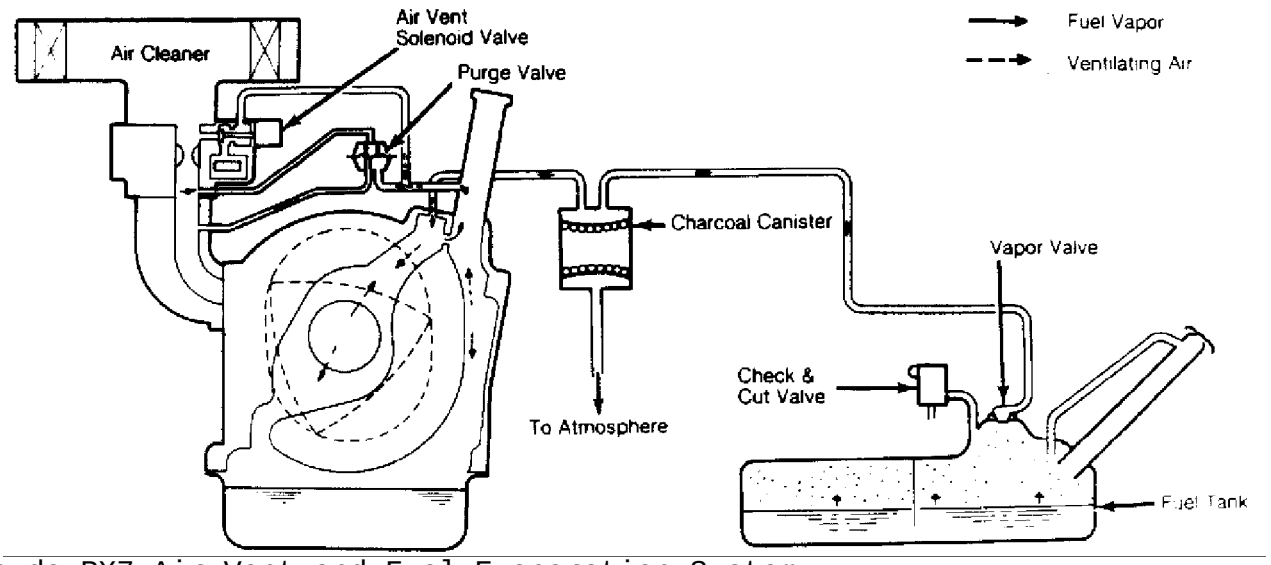

Fig. 2: Mazda RX7 Air Vent and Fuel Evaporation System

CHECK & CUT VALVE

This valve has 3 functions: When fuel tank pressure becomes too high, valve releases pressure to atmosphere. When vacuum becomes too high, valve allows air into tank to prevent tank from collapsing. If vehicle is overturned, valve prevents fuel leakage by sealing the line with a check ball.

TESTING

EVAPORATIVE LINE CHECK

1) Disconnect evaporative hose from canister. Connect detached hose to a "U" tube type pressure gauge filled with water.
2) Gradually apply low air pressure into "U" tube so that difference of water level reaches 14" (356 mm).
3) Bind inlet of "U" tube and leave bound for 5 minutes. If water level drops no more than 1" (25 mm) after 5 minutes, evaporative line is in good condition.

CHECK & CUT VALVE

1) Remove check and cut valve from lines. Connect a pressure gauge with "T" on nipple leading to fuel tank. Hold finger over opposite nipple.
2) Blow through open end of "T" fitting. When pressure gauge reads .78-1.0 psi (.06-.07 kg/cmý), valve should open.
3) Remove "T" fitting and gauge from fuel tank nipple and connect to nipple at bottom of valve (atmosphere vent). Valve should be located horizontally.
4) Repeat test. Valve should open when pressure gauge reads .14-.71 psi (.01-.05 kg/cmý). If valve does not operate as described, replace check and cut valve.

FUEL EVAPORATION SYSTEM
Article Text (p. 3)

Copyright © 1998 Mitchell Repair Information Company, LLC
Sunday, August 26, 2001 04:58PM

AIR VENT SOLENOID VALVE

Check air vent hose for cracks or damage. Disconnect air vent hose from ventilation pipe. Slowly blow through hose. Air should pass through solenoid. Turn ignition "ON" and blow through hose again. Air should not pass through valve. If valve does not operate as described, replace valve.

MAINTENANCE

Check system function every 15,000 miles. Check and Cut Valve should be tested every 25,000 miles. Replace parts as necessary.

END OF ARTICLE

FUEL PUMP - ELECTRIC
Article Text

Copyright © 1998 Mitchell Repair Information Company, LLC
Sunday, August 26, 2001 05:54PM

ARTICLE BEGINNING

1983 Electric Fuel Pump
MAZDA

RX7, Pickup

DESCRIPTION & OPERATION

Electric fuel pump is mounted near fuel tank on frame member. Power is supplied when ignition switch is in the "RUN" position. This circuit is protected by a 15-amp fuse (20-amp on RX7) at fuse panel. In-line fuel filter must be changed within recommended mileage interval before performing tests. If in doubt, install new filter.

TESTING

PRESSURE TEST

1) Remove air cleaner assembly and disconnect fuel line at carburetor. Connect pressure gauge with restrictor and a flexible hose. See Fig. 1. Turn ignition on and briefly vent the system into container by opening hose restrictor.
2) Pressure should stabilize at 2.8-3.6 psi (.19-.25 kg/cmý). If not within specifications, and lines and filter are in satisfactory condition, replace pump.

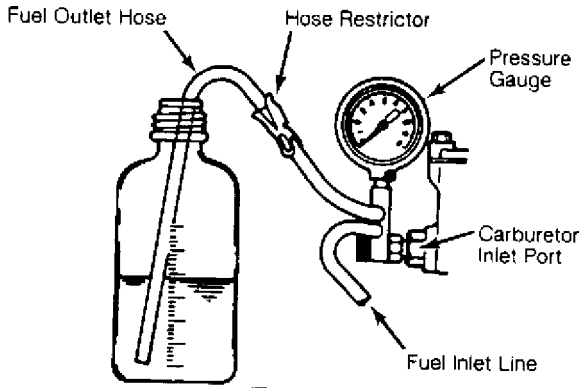

Fig. 1: Fuel Pump Pressure and Volume Test

VOLUME TEST

With fuel pressure within limits, open restrictor for one minute and measure fuel expelled. If not within specifications, check for restrictions in tank, line or filter. Replace pump if required.

FUEL PUMP VOLUME

Application	Volume Qt./Min. (cc/Min.)

FUEL PUMP - ELECTRIC
Article Text (p. 2)

Copyright © 1998 Mitchell Repair Information Company, LLC
Sunday, August 26, 2001 05:54PM

RX7 ..... 1.5 (1400)
Pickup ..... .8(800)

FUEL PUMP

Removal & Installation (B2000)

Disconnect negative battery cable. Unplug connector at fuel pump. Disconnect inlet and outlet hoses at fuel pump. Remove fuel pump-to-mounting bracket nuts and remove pump. To install, reverse removal procedure.

Removal & Installation (RX7)

Remove rear floor mat and disconnect fuel pump electrical lead. Raise and support vehicle. Remove fuel pump cover. Disconnect inlet and outlet hoses from pump. Remove fuel pump. To install, reverse removal procedure.

END OF ARTICLE

HOT IDLE COMPENSATION SYSTEM
Article Text

Copyright © 1998 Mitchell Repair Information Company, LLC
Sunday, August 26, 2001 04:59PM

ARTICLE BEGINNING

1983 Exhaust Emission Systems
MAZDA PISTON ENGINE
HOT IDLE COMPENSATION SYSTEM

All Models

DESCRIPTION

The Hot Idle Compensation System supplies additional air to intake manifold under hot idle conditions to maintain smooth idle and reduce emissions. A bi-metal valve in air cleaner opens passage from air cleaner to intake manifold. When this happens, fresh air mixes with rich air/fuel mixture (caused by sustained idle) and creates better combustion. Valve opens between 145-160øF (63-71øC).

TESTING

HOT IDLE COMPENSATOR

When engine is cold or air temperature is normal, detach air hose from intake manifold and try to pull air through with vacuum pump. No air should pass through compensator. Using a heat lamp, heat valve to temperature above 155øF (69øC) and try to pull air through hose. Air should pass through compensator. If not, replace compensator.

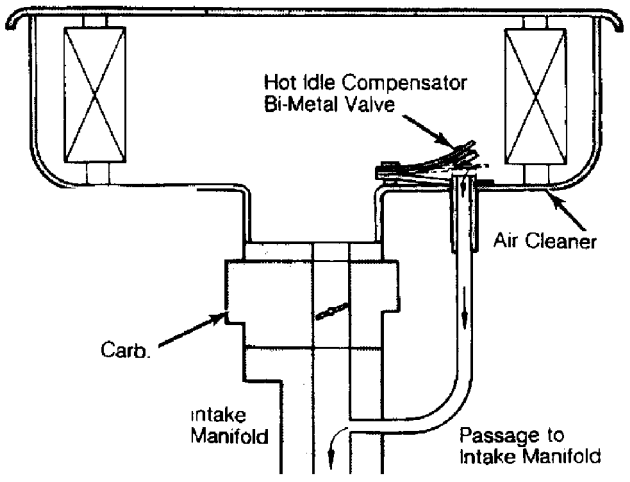

Fig. 1: Mazda Hot Idle Compensator Valve

END OF ARTICLE

IDLE COMPENSATION SYSTEM
Article Text

Copyright © 1998 Mitchell Repair Information Company, LLC
Sunday, August 26, 2001 04:59PM

ARTICLE BEGINNING

1983 Exhaust Emission Systems
MAZDA RX7 IDLE COMPENSATION SYSTEM

DESCRIPTION

The Idle Compensation system is installed to control the air/fuel mixture under varying engine operating conditions. The system consists of idle compensator, altitude compensator and throttle opener (air conditioned models).

IDLE COMPENSATOR OPERATION

The idle compensator is a bimetal valve installed in the air cleaner. The bimetal valve opens at approximately 149øF (65øC) to supply additional air to intake manifold to lean the air/fuel mixture for more complete burning.

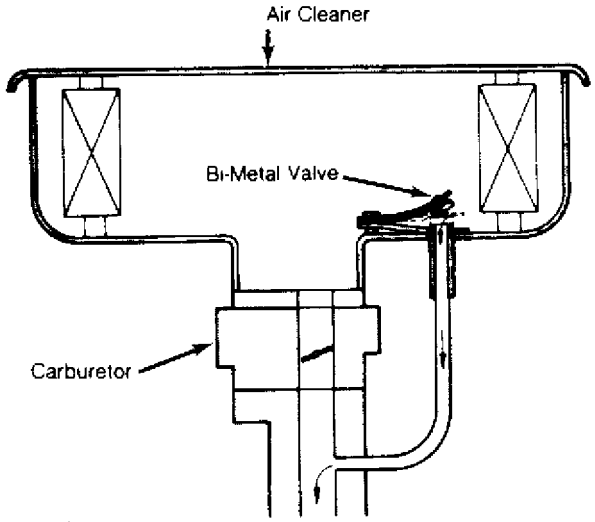

Fig. 1: Idle Compensator

ALTITUDE COMPENSATOR OPERATION

The altitude compensator is installed on the carburetor to supply additional air to carburetor during idle mode in high altitude areas. The altitude compensator stabilizes engine operation.

THROTTLE OPENER OPERATION

AIR CONDITIONED MODELS

The throttle opener consists of air conditioner switch (relay on manual transmission models), air conditioner solenoid valve, servo

Copyright © 1998 Mitchell Repair Information Company, LLC
Sunday, August 26, 2001 04:59PM

diaphragm (throttle opener) and connecting hoses and wires. The throttle opener opens the primary throttle valve when air conditioner is operated at engine speeds of 1000-1200 RPM to maintain smooth engine operation.

IDLE COMPENSATOR TEST

Remove air cleaner cover and filter element. When bi-metal temperature is below 149øF (65øC), valve should be closed and no air leakage should exist when vacuum is applied to tube. Bi-metal valve should be open when temperature exceeds 159øF (69øC). If valve does not function as described, replace valve.

ALTITUDE COMPENSATOR TEST

NOTE: Altitude compensator can only be checked at altitudes of 1640-4920 ft. (500-1500 m).

1) Remove air cleaner and start engine. Engine should idle smoothly. Place finger over slow port inside carburetor bore (located on right side of rear bore). With slow port covered, idle speed should drop.

2) If idle speed does not drop, stop engine and remove compensator valve. With compensator valve removed, blow through drilled passages.

3) Air should pass through valve from both passages at altitudes of 1640-4920 ft. (500-1500 m). If not, replace altitude compensator valve.

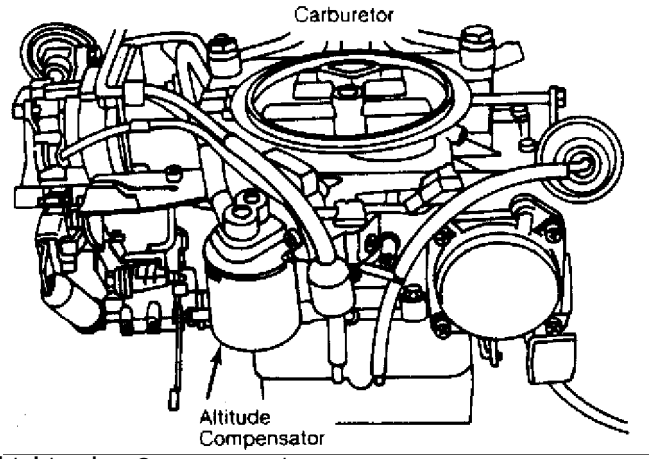

Fig. 2: Altitude Compensator

Copyright © 1998 Mitchell Repair Information Company, LLC
Sunday, August 26, 2001 04:59PM

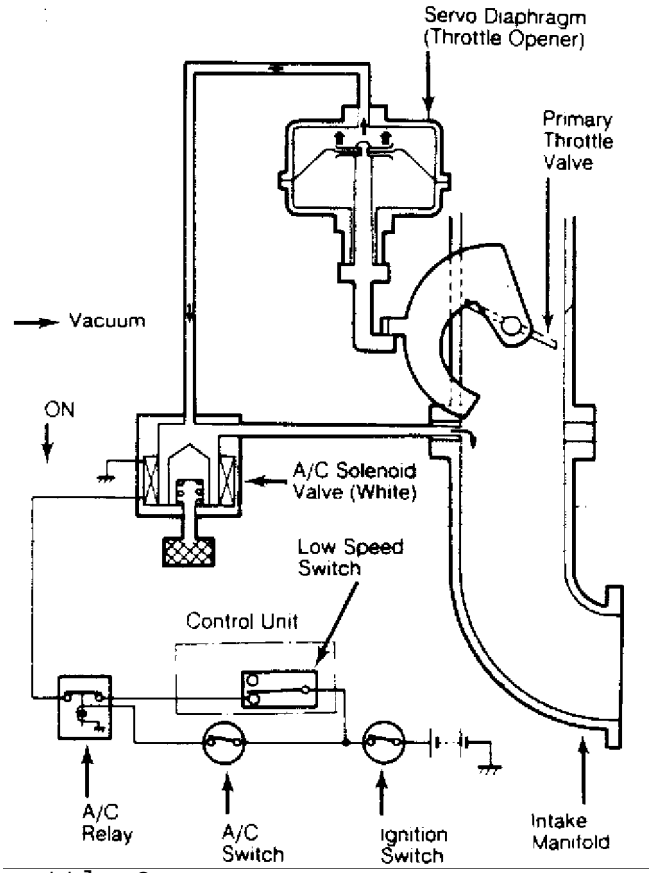

Fig. 3: Throttle Opener

AIR CONDITIONER SOLENOID VALVE TEST

1) Disconnect vacuum sensing tubes from solenoid valve and vacuum port (rear of valve). Blow through vacuum hose and ensure air passes through valve and escapes from air filter. See Fig. 4.

2) Disconnect solenoid valve electrical connector and apply battery power to terminals. Blow through hose again. Air should pass through valve and escape from rear port. See Fig. 4. If valve does not respond as outlined, perform signal check.

Copyright © 1998 Mitchell Repair Information Company, LLC
Sunday, August 26, 2001 04:59PM

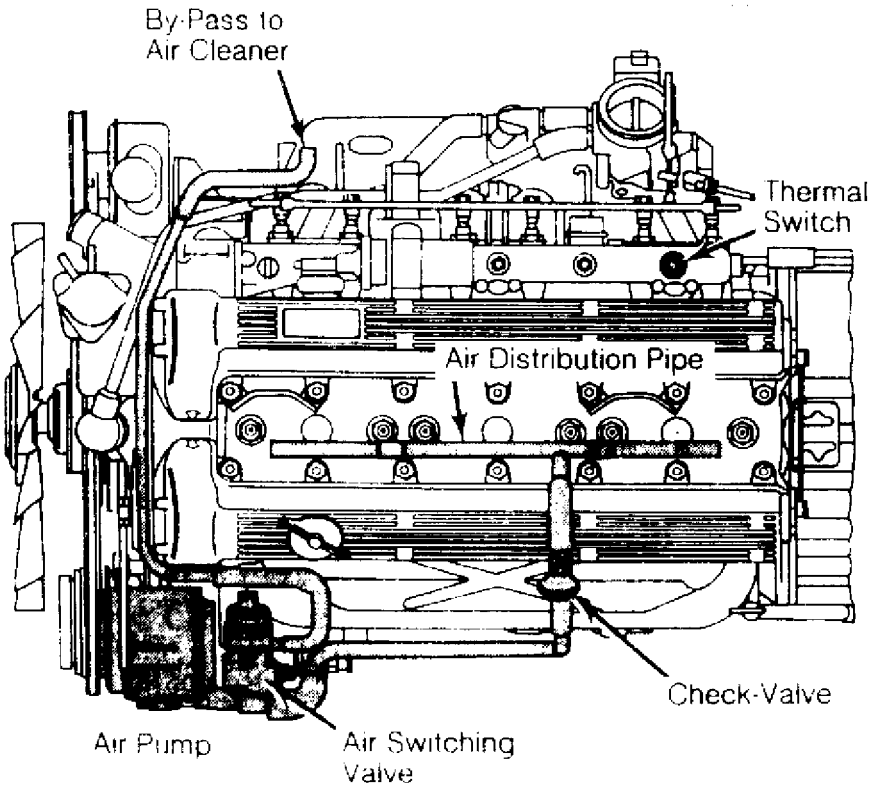

Fig. 4: Testing Air Conditioner Solenoid Valve

AIR CONDITIONER SOLENOID VALVE SIGNAL CHECK TEST

1) Warm engine to normal operating temperature. Stop engine and connect tachometer. Connect a voltmeter to the air conditioner solenoid valve (White color dot) negative terminal. Start engine and turn air conditioner on.

2) On automatic transmission models, current should NOT flow to solenoid valve at any engine speed. On manual transmission models, increase engine speed to 2000 RPM with throttle.

3) Slowly decrease engine speed and watch voltmeter. Voltmeter should read near 0V when engine speed is 1000-1200 RPM. If valve does not respond as outlined, replace air conditioner solenoid valve.

NOTE: Before replacing air conditioner solenoid valve, check auxiliary control unit as outlined in "Mazda RX7 Auxiliary Control Device" article in this section.

AIR CONDITIONER RELAY TEST

Man. Trans. Only

1) Disconnect electrical connector from air conditioner relay. Using an ohmmeter, check continuity between terminals.

2) With engine off and no power applied, there should be

Copyright © 1998 Mitchell Repair Information Company, LLC
Sunday, August 26, 2001 04:59PM

continuity between No. 1 and No. 5. There should be no continuity between No. 1 and No. 3.

3) Connect a wire from battery positive post to terminal No. 2 and battery negative post to terminal No. 4. There should be continuity between No. 1 and No. 3. There should be no continuity between No. 1 and No. 5.

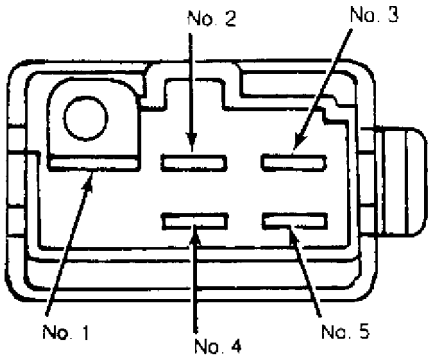

Fig. 5: Air Conditioner Relay Terminals (Manual Transmission Only)

THROTTLE OPENER TEST

1) Switch off all accessories. Remove fuel filler cap. Disconnect and plug idle compensator tube at air cleaner. Connect tachometer to engine and warm engine to normal operating temperature.

2) Disconnect electrical connector from switching solenoid valve (Gray color dot). Disconnect and plug vacuum sensing tubes from vacuum control units on distributor (except Calif. Man. Trans.).

3) Turn air conditioner off. Disconnect electrical connector from air conditioner solenoid valve and connect battery power to solenoid terminals.

4) With battery power applied to solenoid terminals, throttle opener should increase engine speed from idle to 1150-1250 RPM (in Neutral). If engine speed is not within specification, turn adjusting nut on throttle opener arm until engine speed is within specification.

END OF ARTICLE

PCV SYSTEM
Article Text

Copyright © 1998 Mitchell Repair Information Company, LLC
Sunday, August 26, 2001 04:59PM

ARTICLE BEGINNING

1983 Crankcase Ventilation
MAZDA

B2000, B2200, GLC, 626, RX7

DESCRIPTION & OPERATION

PISTON ENGINES

The PCV system includes 2 hoses and a PCV valve. Air normally flows out of the valve cover hose, through the PCV valve and into combustion chambers. A hose from the air cleaner to the valve cover supplies fresh air to the crankcase.

When intake manifold vacuum drops due to heavy loads, the amount of blow-by exceeds the capacity of the PCV valve. Air then flows directly from the valve cover into the air cleaner and carburetor. When engine is not running, the PCV valve is closed and vapors are stored in the crankcase.

ROTARY ENGINES

The system used on the rotary engine (RX7) is also a closed system and operates basically the same way as the piston engine arrangement.

Filtered air is drawn into the system through the air cleaner, mixed with the gases and vapors that blow by the rotor during engine operation, and is drawn out through a purge valve and into the intake manifold. The purge valve operates as the PCV valve in this system.

DIESEL ENGINE

The PCV system on diesel engines consists of a hose to the air intake from the cylinder head cover. All blow-by gases are introduced into the air intake and prevented from entering the atmosphere. There is no testing the PCV system on the diesel engines. Hoses should be kept free of obstructions.

PCV SYSTEM
Article Text (p. 2)

Copyright © 1998 Mitchell Repair Information Company, LLC
Sunday, August 26, 2001 04:59PM

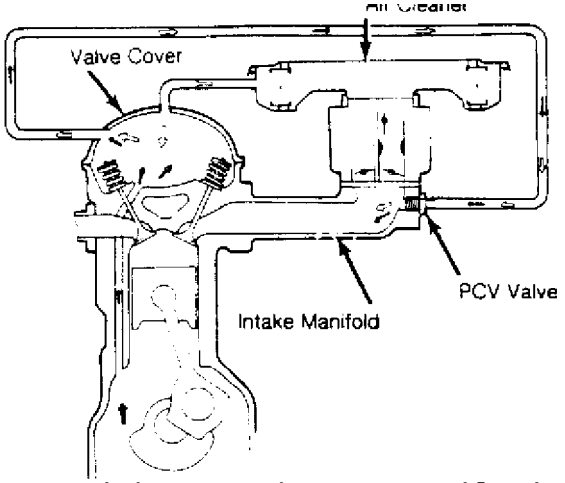

Fig. 1: B2000 Pickup Crankcase Ventilation System

TESTING

PISTON ENGINES

All Exc. GLC FWD

With engine idling at normal operating temperature, disconnect PCV valve hose at valve cover. Close off hose opening with finger and check that idle speed drops. If idle speed does not drop, replace valve.

GLC FWD

Remove PCV valve from valve cover. Blow through valve with mouth pressure from valve cover side of valve. Air should pass through. Blow through valve from opposite end. Air should not pass through. If valve does not operate as described, replace valve.

ROTARY ENGINES

1) Disconnect purge valve-to-oil filler tube hose from purge valve. Start engine and operate at idle speed. Place finger over port "C" and check that air is not being drawn into port. See Fig. 2.

2) Increase engine speed to 2000 RPM and check port "C". Air should be drawn into port. If valve does not operate as outlined, replace purge valve.

MAINTENANCE

Clean valve and check PCV system operation every 30,000 miles.

PCV SYSTEM
Article Text (p. 3)

Copyright © 1998 Mitchell Repair Information Company, LLC
Sunday, August 26, 2001 04:59PM

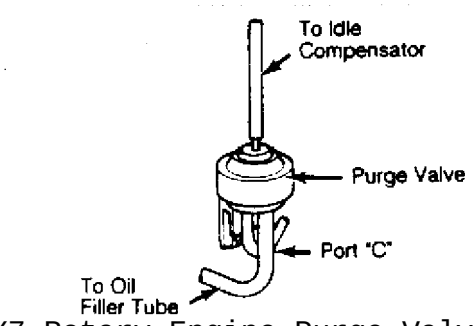

Fig. 2: RX7 Rotary Engine Purge Valve
Air flow should be checked at port "C".

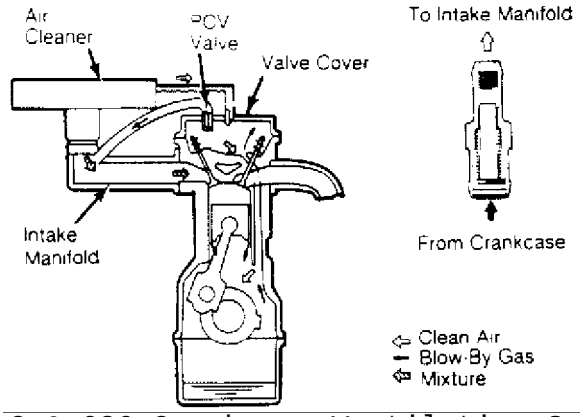

Fig. 3: GLC & 626 Crankcase Ventilation System
Note direction of flow.

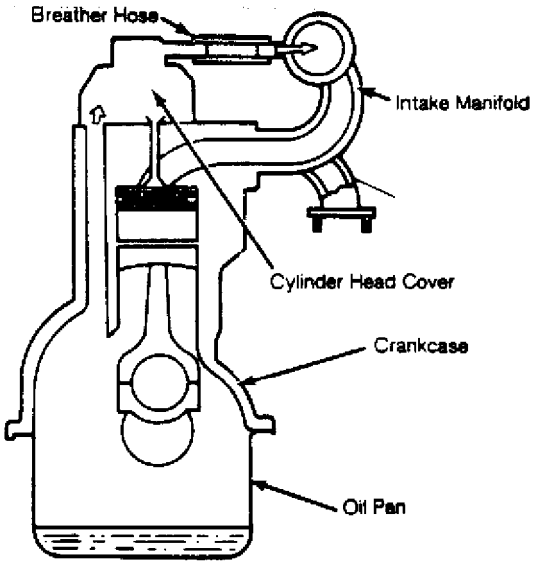

Fig. 4: B2200 Diesel Pickup Crankcase Ventilation System

END OF ARTICLE

SPARK CONTROL SYSTEM
Article Text

Copyright © 1998 Mitchell Repair Information Company, LLC
Sunday, August 26, 2001 04:59PM

ARTICLE BEGINNING

1983 Exhaust Emission Systems
MAZDA RX7 IGNITION CONTROL SYSTEM

RX7 (Exc. Calif. Man. Trans.)

DESCRIPTION

The Ignition Control system is used to regulate vacuum advance of leading and trailing distributor systems. In addition, this system helps reduce CO and HC emissions by aiding pellet converter warm-up during cold engine starts.

System consists of leading and trailing components of distributor system, vacuum control solenoid valve (except Calif. man. trans.), No. 1 water temperature switch and connecting wiring and tubing.

OPERATION

The Ignition Control system operates when engine is cold and running between 1000-1200 RPM and when engine is hot during quick deceleration from 3000 RPM.

TESTING

NOTE: For additional information and adjustments on distributor spark timing, see appropriate information in "Mazda RX7 Tune-Up Service Procedures," article in this section.

VACUUM CONTROL SOLENOID VALVE

1) Disconnect vacuum sensing tubes from leading vacuum control solenoid valve (Brown dot). Blow through solenoid valve from vacuum tube "B" shown in Fig. 1. Air should escape at front port. Trailing vacuum control solenoid valve (Green dot) is tested in the same manner.

2) Disconnect electrical connector from solenoid valve and connect battery power to terminals on valve. Blow through hose again. Air should escape through air filter at rear of valve. Replace valve if it does not perform as outlined.

VACUUM CONTROL SOLENOID VALVE
SIGNAL CHECK

1) Warm engine to normal operating temperature. Stop engine and connect tachometer to engine. Connect voltmeter to negative terminal of leading vacuum control solenoid valve (do not unplug connector). Place auto. trans. vehicles in "P", man. trans. vehicles in Neutral.

2) Start engine and run at idle speed. Voltmeter should read

Copyright © 1998 Mitchell Repair Information Company, LLC
Sunday, August 26, 2001 04:59PM

0V at idle. When transmission is shifted into any forward or reverse gears, voltmeter should read near 12V.

3) Increase engine speed to 2000 RPM. Slowly decrease engine speed from 2000 RPM and watch voltmeter. Current should stop flowing to solenoid terminals when engine speed is 1000-1200 RPM.

4) Stop engine and disconnect No. 1 water temperature switch connector (located behind alternator). Connect a jumper wire between terminals of water temperature connector. Start engine and set engine speed at 2000 RPM with choke knob.

5) Unplug connector from No. 2 water temperature switch (located on radiator). Check that the voltmeter reads near 12V when the connector is unplugged from the switch. Disconnect jumper wire and plug in No. 1 water temperature switch connector.

6) Quickly decelerate engine speed from 3000 RPM. The voltmeter should read near 0V during deceleration and at idle speed. Trailing vacuum control solenoid valve (Green dot) is tested in the same manner.

NOTE: Before replacing vacuum control solenoid valve, check auxiliary control unit, No. 2 water temperature switch, choke switch and choke relay as described in "Mazda RX7 Auxiliary Control Device," article in this section. Also check throttle sensor as described in "Mazda RX7 Deceleration Control System," article in this section.

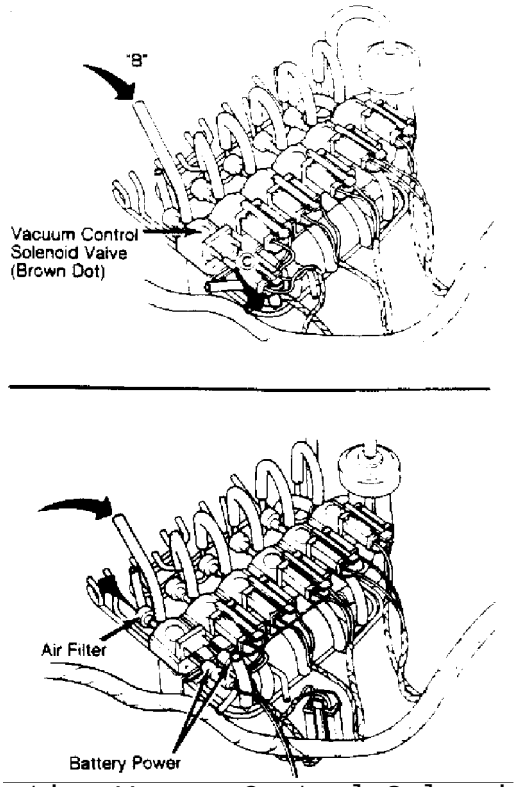

Fig. 1: Testing Vacuum Control Solenoid Valve
Voltmeter and tachometer required for tests.

TUNE-UP - ROTARY
Article Text

Copyright © 1998 Mitchell Repair Information Company, LLC
Sunday, August 26, 2001 05:54PM

ARTICLE BEGINNING

1983 Mazda Rotary Tune-Up
TUNE-UP

RX7

IDENTIFICATION

ENGINE IDENTIFICATION

Engine type code is stamped on rear rotor housing, to the rear of oil filter. Engine serial number is stamped on front rotor housing behind distributor.

TESTING

ENGINE COMPRESSION

The manufacturer recommends using a special compression tester (49 0820 280K). Compression testers for piston engines will read only the highest pressure of the 3 combustion chambers in the rotor housing.

COMPRESSION SPECIFICATIONS

Application	Specification
Min. Compression Pressure	86 psi (6.0 kg/cmý)
Max. Variation	21 psi (1.5 kg/cmý)

SPARK PLUGS

SPARK PLUG TYPE

Application	Nippondenso No.	NGK No.
All Models	W25EDR14	BR8EQ14

SPARK PLUG SPECIFICATIONS

Gap: In. (mm)	Torque: Ft. Lbs. (N.m)
0.055 (1.4)	11 (15)

HIGH TENSION WIRE RESISTANCE

Carefully remove high tension wires from spark plugs and

Copyright © 1998 Mitchell Repair Information Company, LLC
Sunday, August 26, 2001 05:54PM

distributor cap. Using an ohmmeter, measure resistance of wires while gently twisting wires. If resistance is not to specifications, or fluctuates from infinity to any value, replace high tension wire(s).

HIGH TENSION WIRE RESISTANCE

Application	Ohms
All Models	4880 per Foot

ADJUSTMENTS

DISTRIBUTOR

All models are equipped with Mitsubishi electronic ignition with 2 pick-up coils. Air gap is non-adjustable.

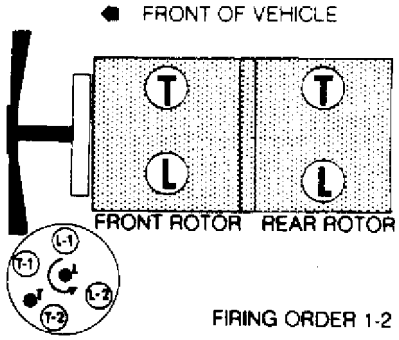

Fig. 1: Firing Order and Distributor Rotation

IGNITION TIMING

NOTE: On vehicles equipped with automatic transmission, place selector lever in "D" position and block the wheels.

1) Warm engine to normal operating temperature. Connect a tachometer, then connect timing light to leading (lower) spark plug of front rotor. Start engine and run at idle speed.

2) Check ignition timing and rotate distributor to correct if necessary. Tighten distributor lock nut and recheck timing.

3) Connect timing light to trailing (upper) plug of front rotor. Start engine and check timing. If not correct, loosen vacuum unit attaching screws. Move vacuum unit in or out to adjust trailing timing. Remove test equipment.

Copyright © 1998 Mitchell Repair Information Company, LLC
Sunday, August 26, 2001 05:54PM

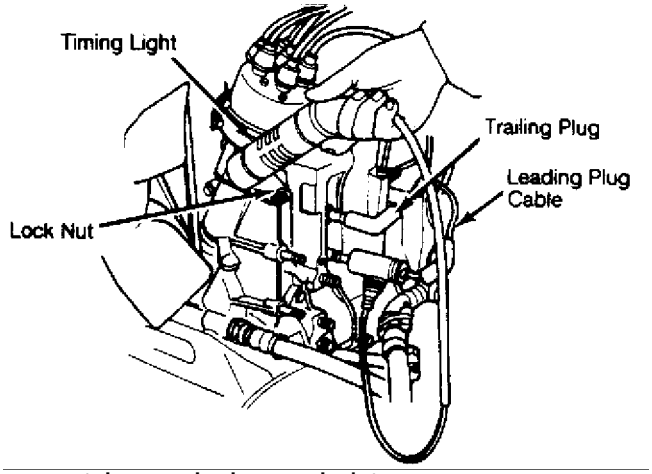

Fig. 2: Connecting Timing Light
Check leading plug timing first.

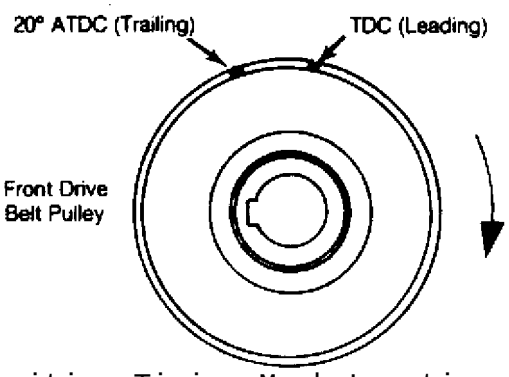

Fig. 3: Ignition Timing Mark Location

IGNITION TIMING (DEGREES ATDC @ RPM)

Application	Timing
Leading	TDC@750
Trailing	20@750

IDLE SPEED & MIXTURE

Idle Speed

1) Switch off all accessories. Remove fuel filler cap. Disconnect and plug idle compensator tube at air cleaner. Connect tachometer to engine. Ensure parking brake is engaged and wheels are blocked.

2) On manual transmission models, make sure dashpot rod does not keep throttle lever from returning to stop. On air conditioned models, make sure throttle opener does not keep throttle lever from returning to stop.

3) Warm engine to normal operating temperature. Place automatic transmission in "D". Check idle speed. Adjust curb idle

Copyright © 1998 Mitchell Repair Information Company, LLC
Sunday, August 26, 2001 05:54PM

speed to specification by turning throttle adjusting screw.

NOTE: Mixture adjustment is not part of normal tune-up procedure and should not be performed unless carburetor is overhauled or vehicle fails emissions testing.

Idle Mixture

1) Idle mixture adjustment requires removal of carburetor to remove limiter cap. Using a hacksaw, cut through limiter cap and mixture screw 0.4" (10 mm) from cap end. Remove mixture screw and install new mixture screw.

2) To install new mixture screw, tighten screw lightly and ensure it is fully seated. Back screw out 3 turns for preliminary adjustment. Reinstall carburetor with new gaskets and warm engine to normal operating temperature.

3) To adjust idle mixture, set idle speed to idle set specification by turning throttle set screw (automatic transmission in "N"). Set idle speed to highest RPM obtainable by turning mixture screw. Reset idle speed to idle set specification by turning throttle screw. See Fig. 4.

4) Turn mixture screw until lean drop specification is obtained (automatic transmission in "N"). On automatic transmission, shift transmission to "D" and set idle speed to curb idle specification by turning throttle screw.

IDLE SPEED & MIXTURE SPECIFICATIONS

Application	Curb Idle RPM	Idle Set RPM	Lean Drop RPM
Man. Trans.	750	770	750
Auto. Trans.	(1) 750	(2) 870	(2) 840

(1) - Transmission in "D".
(2) - Transmission in "N".

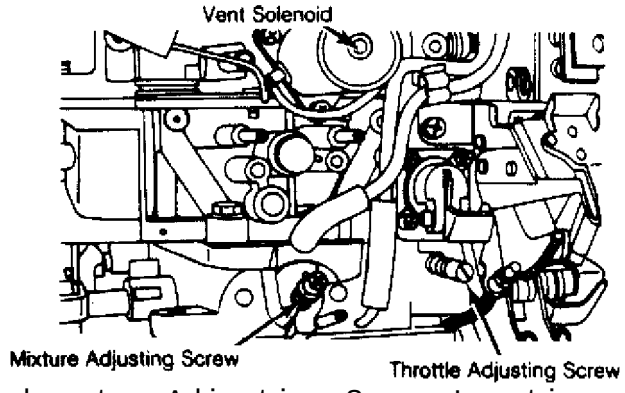

Fig. 4: Carburetor Adjusting Screw Locations

COLD (FAST) IDLE RPM

Copyright © 1998 Mitchell Repair Information Company, LLC
Sunday, August 26, 2001 05:54PM

NOTE: Carburetor must be removed to check and/or adjust fast idle.

Adjust fast idle by setting angle of primary throttle valve with choke valve fully closed. Clearance between primary throttle valve and throttle bore should be .040-.047" (1.0-1.2 mm). If not to specification, bend fast idle rod until correct clearance is obtained.

SERVICING

EMISSION CONTROL

See EMISSIONS section.

SPECIFICATIONS

IGNITION

Distributor
All models are equipped with Mitsubishi electronic ignition with 2 pick-up coils. Air gap is non-adjustable.

IGNITION COIL RESISTANCE - Ohms @ 68øF (20øC)

Primary	Secondary
1.2-1.5	N/A

FUEL SYSTEMS

FUEL PUMP PERFORMANCE

Pressure: psi (kg/cmý)	Pints (Liters): Volume in 30 Sec.
2.8-3.6 (.2-.3)	1.5 (.7)

Carburetor
All models use a Nikki 4-Bbl. carburetor.

BATTERY

BATTERY SPECIFICATIONS

Application	Amp Hr. Capacity
Standard	50
Optional	55

STARTER

TUNE-UP - ROTARY
Article Text (p. 6)

Copyright © 1998 Mitchell Repair Information Company, LLC
Sunday, August 26, 2001 05:54PM

All models are equipped with a Mitsubishi starter using an overrunning clutch.

STARTER SPECIFICATIONS

Application	Volts	Amps	Test RPM
Man. Trans.	11.5	60	6500
Auto. Trans.	11.5	100	3500

ALTERNATOR

All models are equipped with a Mitsubishi alternator.

ALTERNATOR SPECIFICATIONS

Application	Rated Amp Output
All Models	50

ALTERNATOR REGULATOR

All models are equipped with a Mitsubishi voltage regulator.

REGULATOR OPERATING VOLTAGE @ 68øF (20øC)

Application	Voltage
All Models	13.5

SERVICE SPECIFICATIONS

BELT ADJUSTMENT

Application	(1) Deflection In. (mm)
Alternator Belt	.5-.7 (13-17)
Air Pump Belt	.43-.51 (11-13)
A/C Belt	.39-.47 (10-12)

(1) - Deflection is with 22 lbs. (10 kg) pressure applied midway on longest belt run.

REPLACEMENT INTERVALS

Component	Interval (Miles)
Engine Oil	7500

Copyright © 1998 Mitchell Repair Information Company, LLC
Sunday, August 26, 2001 05:54PM

Oil Filter	15,000
Air Filter	30,000
Spark Plugs	30,000

FLUID CAPACITIES

Application	Quantity
Crankcase (Includes Filter)	4.9 qts. (4.6L)
Cooling System (Includes Heater)	10.0 qts. (9.5L)
Man. Trans. (SAE 90)	2.1 qts. (1.9L)
Auto Trans. (ATF Type F)	6.6 qts. (6.2L)
Rear Axle (SAE 90)	
Standard	2.6 pts. (1.2L)
Limited Slip	3.4 pts. (1.6L)
Fuel Tank	16.6 gals. (63L)

END OF ARTICLE

VACUUM DIAGRAMS
Article Text

Copyright © 1998 Mitchell Repair Information Company, LLC
Sunday, August 26, 2001 05:00PM

ARTICLE BEGINNING

1983 EXHAUST EMISSION SYSTEMS
Mazda Vacuum Diagram

RX7

VACUUM DIAGRAM

VACUUM DIAGRAMS
Article Text (p. 2)

Copyright © 1998 Mitchell Repair Information Company, LLC
Sunday, August 26, 2001 05:00PM

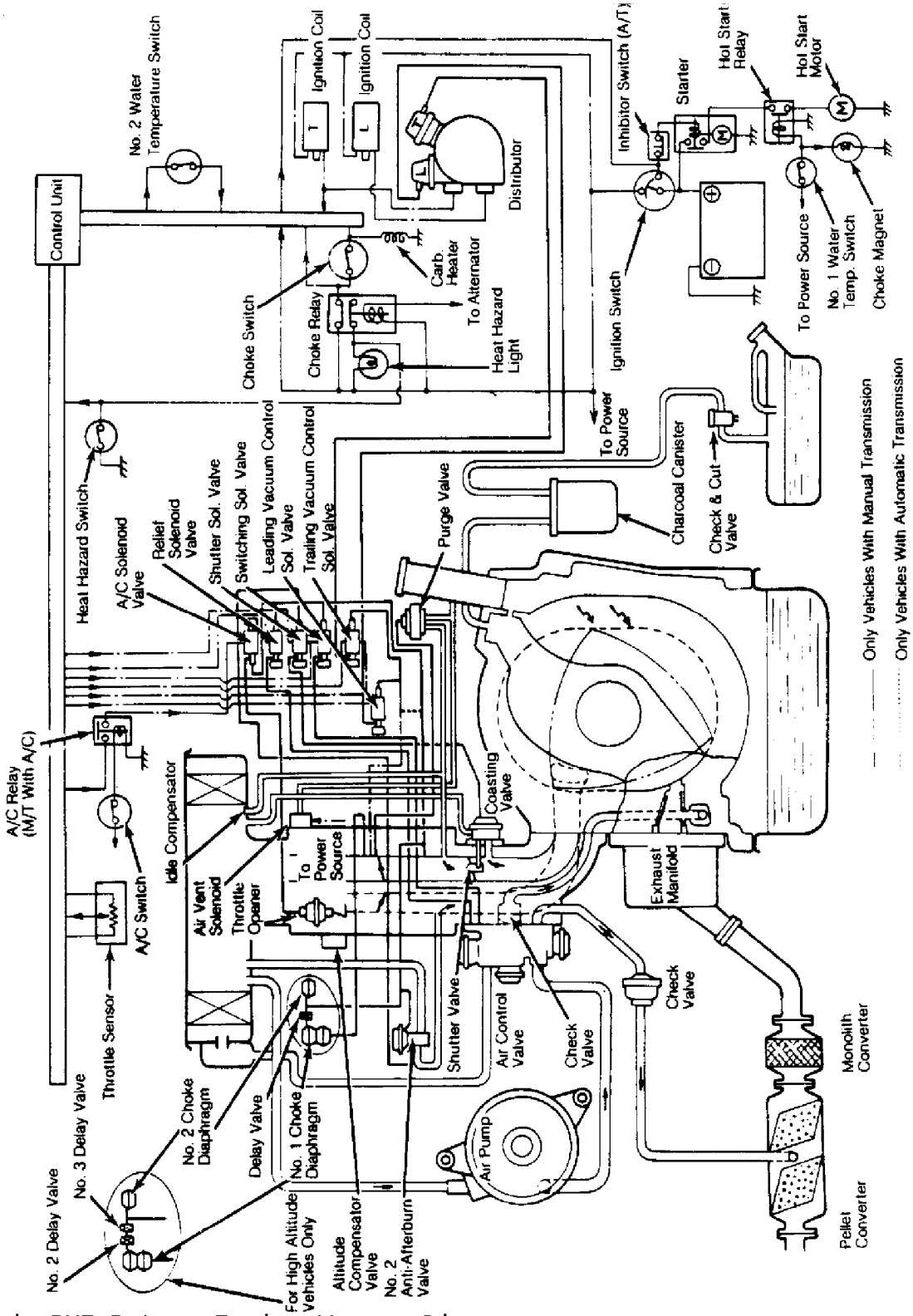

Fig. 1: Mazda RX7 Rotary Engine Vacuum Diagram

END OF ARTICLE

MAINTENANCE INFORMATION
Article Text

Copyright © 1998 Mitchell Repair Information Company, LLC
Sunday, August 26, 2001 06:13PM

ARTICLE BEGINNING

1983-91 MAINTENANCE
Mazda Maintenance Information

RX7

*** PLEASE READ THIS FIRST ***

NOTE: For scheduled maintenance intervals and the related fluid capacities, fluid specifications and labor times for major service intervals, see SCHEDULED SERVICES article in this section. Warranty information and specifications for fluid capacities, lubrication specifications, wheel and tire size, and battery type are covered in this article.

MODEL IDENTIFICATION

VIN LOCATION

The Vehicle Identification Number (VIN) is located on the left side of the dash panel at the base of the windshield. The VIN chart explains the code characters.

VIN CODE ID EXPLANATION

Numbers preceding the explanations in the legend below refer to the sequence of characters as listed on VIN identification label. See VIN example below.

(VIN)	J	M	1	F	C	3	3	1	1	K	0	2	0	0	0	1
	1	2	3	4	5	6	7	8	9	10	11	12	13	14	15	16	17

1 - Manufacturing Country
J * Japan

2 - Make
M * Mazda Motors Corp., Japan

3 - Type
1 * Passenger Car
V * Passenger Car

4-5 - Model
FB * RX7 (1983-85)
FC * RX7 (1986-91)

6-7 - Body Style
33 * Hatchback

Copyright © 1998 Mitchell Repair Information Company, LLC
Sunday, August 26, 2001 06:13PM

35 * Convertible

8 - Modification Code
1 * 13BE Rotary
2 * 13BT Rotary (Turbo)

9 - VIN Check Digit
1 * Constant For All Models

10 - Vehicle Model Year
D * 1983
E * 1984
F * 1985
G * 1986
H * 1987
J * 1988
K * 1989
L * 1990
M * 1991

11 - Assembly Plant
0 * Hiroshima, Japan

12-17 - Serial Number
* Sequential Production Number

MAINTENANCE SERVICE INFORMATION

SEVERE & NORMAL SERVICE DEFINITIONS

NOTE: Use the Severe Service schedule if the vehicle to be serviced is operated under ANY (one or more) of these conditions:

Service is recommended at mileage intervals based on vehicle operation. Service schedules are based on the following primary operating conditions:

Normal Service

* Driven More Than 10 Miles Daily
* No Operating Conditions From Severe Service Schedule

Severe Service (Unique Driving Conditions)

* Repeated Short Distance Driving
* Dusty Conditions
* Extended Use Of Brakes
* Salt Or Other Corrosive Materials On The Roads
* Rough Or Muddy Roads
* Extended Idling Or Low Speed Operation
* Extended Operation In Extreme Temperatures

Copyright © 1998 Mitchell Repair Information Company, LLC
Sunday, August 26, 2001 06:13PM

SERVICE POINT LOCATIONS

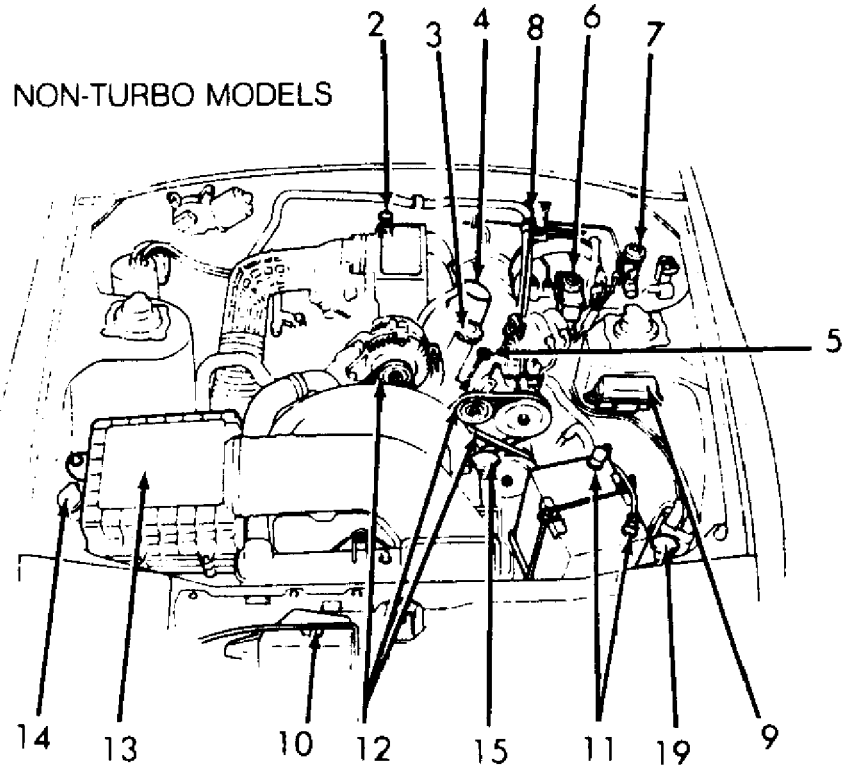

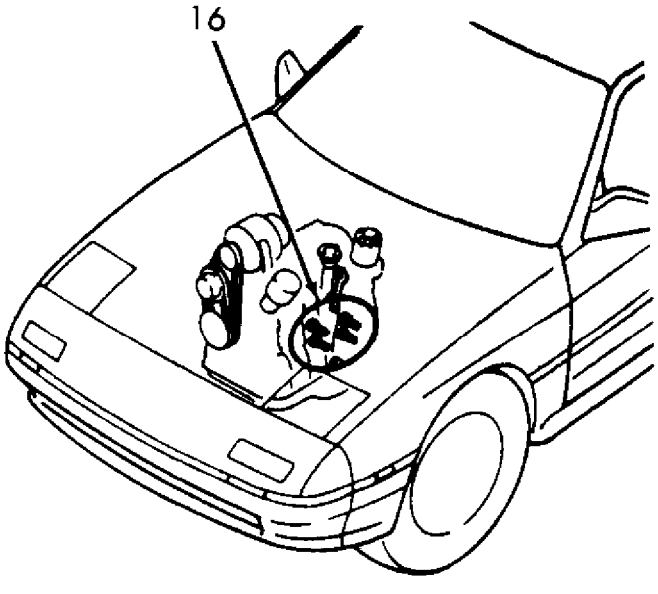

93F45703

1. Sub-Zero Starting Assist Fluid Reservoir (If Equipped)
2. Automatic Transmission Fluid Level Gauge (If Equipped)
3. Engine Oil Filler Cap
4. Oil Filter
5. Engine Oil Dipstick
6. Brake Fluid Reservoir
7. Clutch Fluid Steering Reservoir
8. Power Steering Fluid Filler Cap (With Level Gauge)
9. Main Fuse Block
10. Coolant Reservoir
11. Battery Terminals
12. Drive Belts
13. Air Cleaner
14. Windshield Washer Reservoir
15. Radiator Cap
16. Spark Plugs
17. Intercooler (If Equipped)
18. Turbocharger (If Equipped)
19. Headlight Washer Fluid (If Equipped)

Fig. 1: Service Point Locations (Typical Non-Turbo Engine)
Courtesy of Mazda Motor of America, Inc.

Copyright © 1998 Mitchell Repair Information Company, LLC
Sunday, August 26, 2001 06:13PM

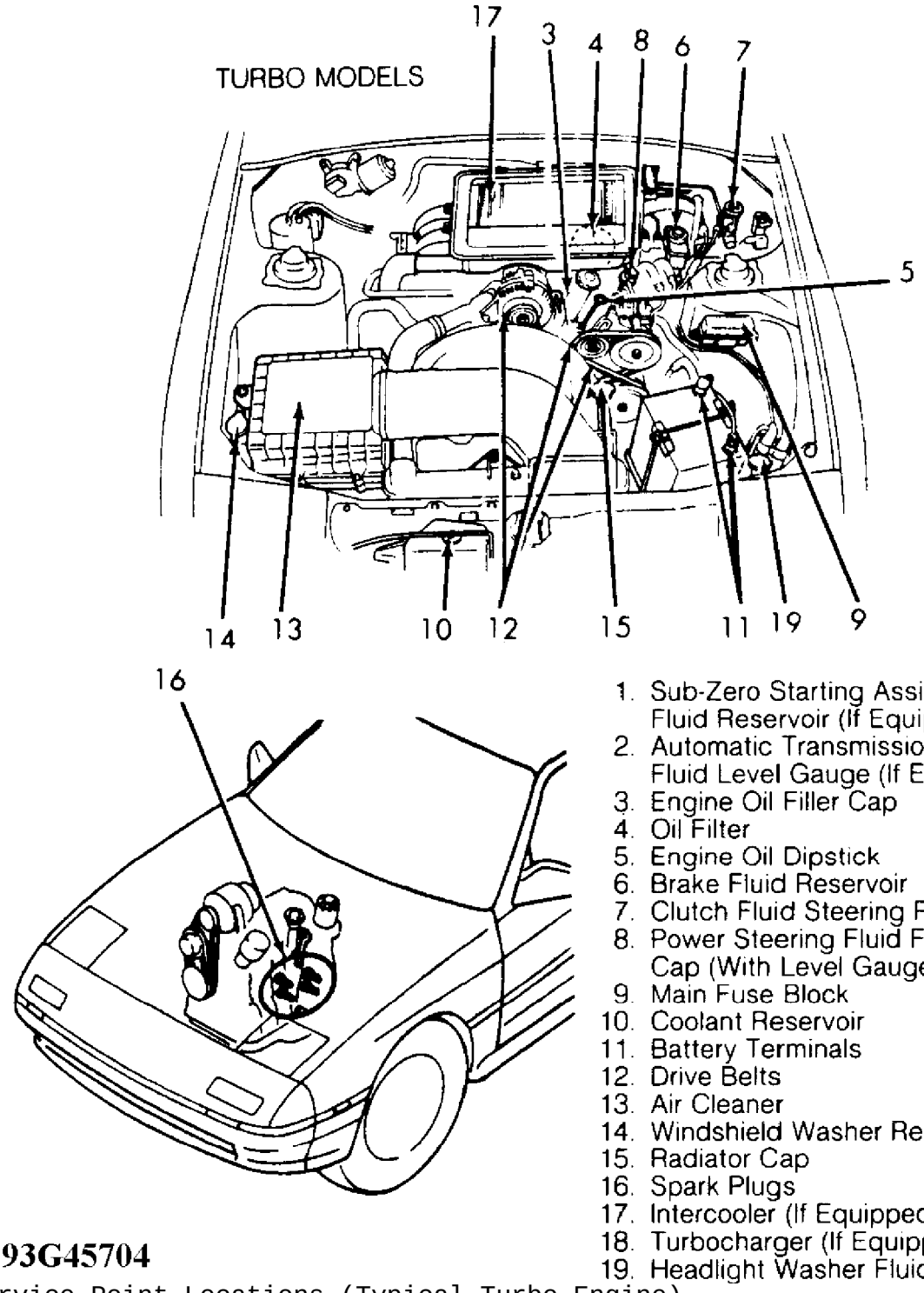

1. Sub-Zero Starting Assist Fluid Reservoir (If Equipped)
2. Automatic Transmission Fluid Level Gauge (If Equipped)
3. Engine Oil Filler Cap
4. Oil Filter
5. Engine Oil Dipstick
6. Brake Fluid Reservoir
7. Clutch Fluid Steering Reservoir
8. Power Steering Fluid Filler Cap (With Level Gauge)
9. Main Fuse Block
10. Coolant Reservoir
11. Battery Terminals
12. Drive Belts
13. Air Cleaner
14. Windshield Washer Reservoir
15. Radiator Cap
16. Spark Plugs
17. Intercooler (If Equipped)
18. Turbocharger (If Equipped)
19. Headlight Washer Fluid (If Equipped)

Fig. 2: Service Point Locations (Typical Turbo Engine)
Courtesy of Mazda Motor of America, Inc.

Copyright © 1998 Mitchell Repair Information Company, LLC
Sunday, August 26, 2001 06:13PM

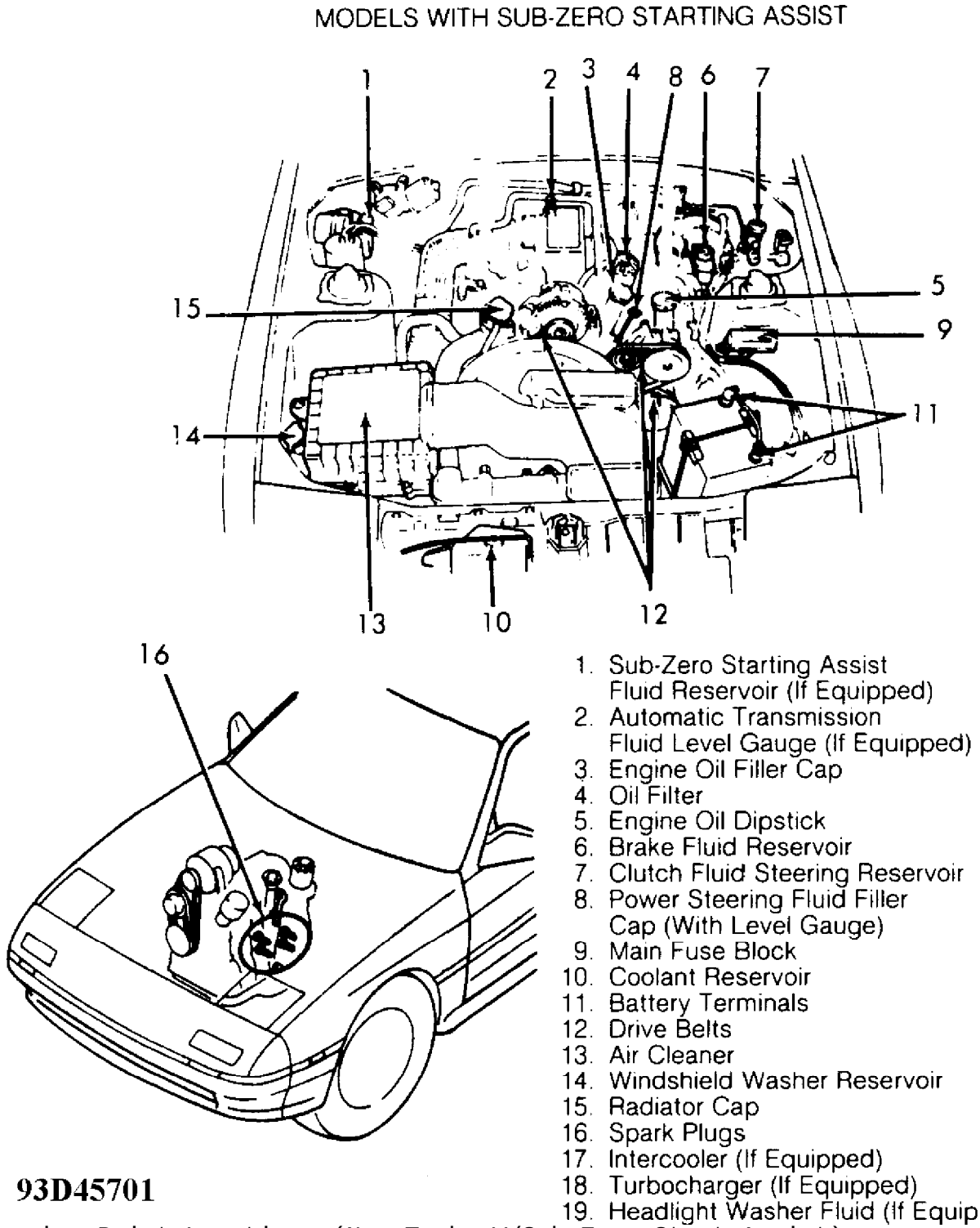

1. Sub-Zero Starting Assist Fluid Reservoir (If Equipped)
2. Automatic Transmission Fluid Level Gauge (If Equipped)
3. Engine Oil Filler Cap
4. Oil Filter
5. Engine Oil Dipstick
6. Brake Fluid Reservoir
7. Clutch Fluid Steering Reservoir
8. Power Steering Fluid Filler Cap (With Level Gauge)
9. Main Fuse Block
10. Coolant Reservoir
11. Battery Terminals
12. Drive Belts
13. Air Cleaner
14. Windshield Washer Reservoir
15. Radiator Cap
16. Spark Plugs
17. Intercooler (If Equipped)
18. Turbocharger (If Equipped)
19. Headlight Washer Fluid (If Equipped)

Fig. 3: Service Point Locations (Non-Turbo W/Sub-Zero Start Assist)
Courtesy of Mazda Motor of America, Inc.

Copyright © 1998 Mitchell Repair Information Company, LLC
Sunday, August 26, 2001 06:13PM

TURBO MODELS WITH SUB-ZERO STARTING ASSIST

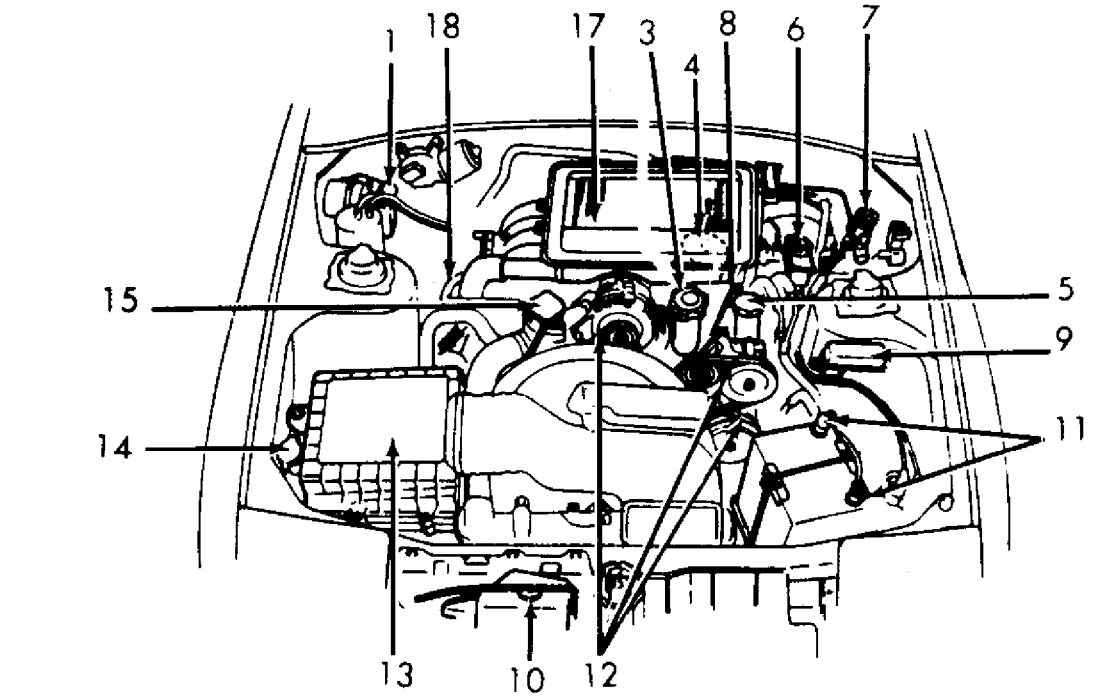

1. Sub-Zero Starting Assist Fluid Reservoir (If Equipped)
2. Automatic Transmission Fluid Level Gauge (If Equipped)
3. Engine Oil Filler Cap
4. Oil Filter
5. Engine Oil Dipstick
6. Brake Fluid Reservoir
7. Clutch Fluid Steering Reservoir
8. Power Steering Fluid Filler Cap (With Level Gauge)
9. Main Fuse Block
10. Coolant Reservoir
11. Battery Terminals
12. Drive Belts
13. Air Cleaner
14. Windshield Washer Reservoir
15. Radiator Cap
16. Spark Plugs
17. Intercooler (If Equipped)
18. Turbocharger (If Equipped)
19. Headlight Washer Fluid (If Equipped)

Fig. 4: Service Point Locations (Turbo W/Sub-Zero Start Assist)
Courtesy of Mazda Motor of America, Inc.

INFORMATION LABEL LOCATIONS

Copyright © 1998 Mitchell Repair Information Company, LLC
Sunday, August 26, 2001 06:13PM

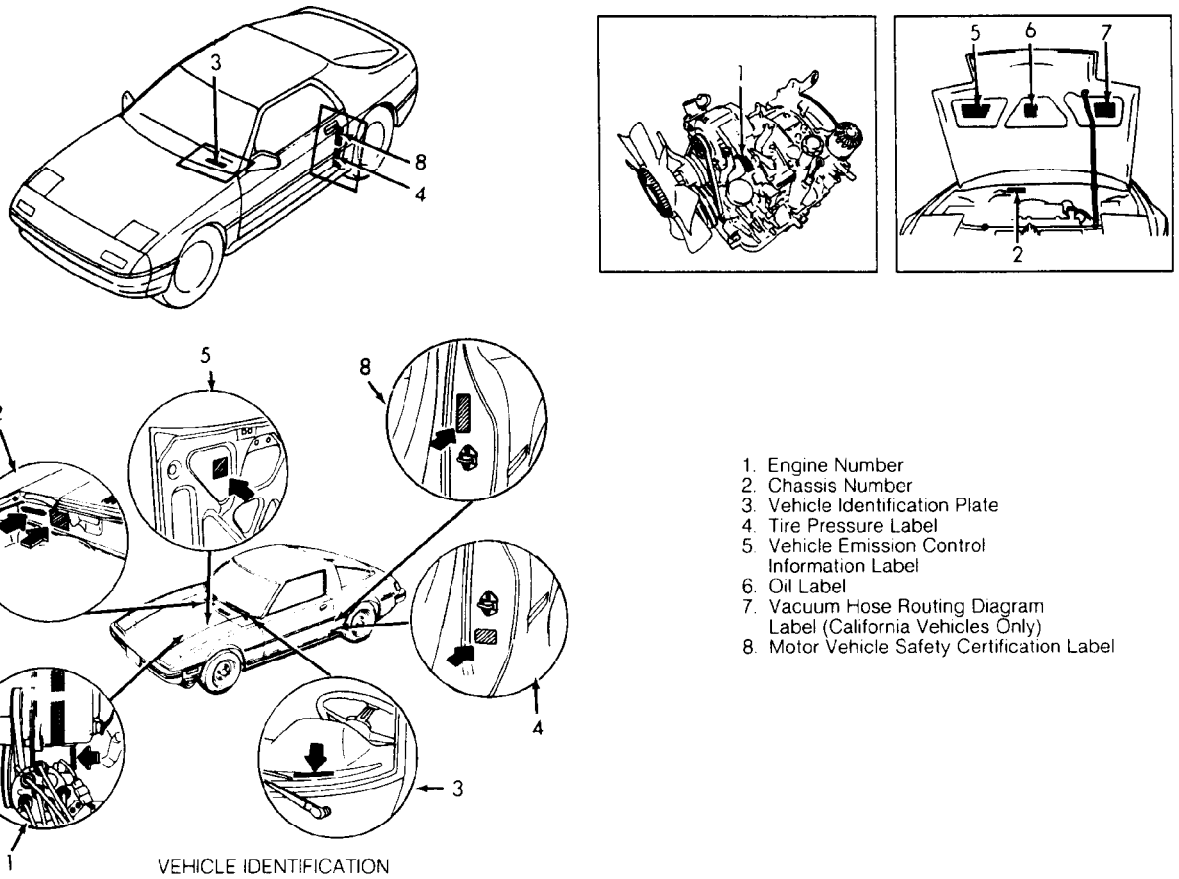

1. Engine Number
2. Chassis Number
3. Vehicle Identification Plate
4. Tire Pressure Label
5. Vehicle Emission Control Information Label
6. Oil Label
7. Vacuum Hose Routing Diagram Label (California Vehicles Only)
8. Motor Vehicle Safety Certification Label

Fig. 5: Information Label Locations
Courtesy of Mazda Motor of America, Inc.

SERVICE LABOR TIMES

SERVICE LABOR TIMES TABLE (HOURS)

Application	30,000 Mile Service	60,000 Mile Service
RX7		
Automatic Transmission	2.1	3.7
Manual Transmission	2.1	4.1

LUBRICATION SPECIFICATIONS

LUBRICATION SPECIFICATIONS TABLE

Application	Fluid Specifications
Brake Fluid	SAE J1703 or FMVSS116 DOT 3
Engine Oil	

Copyright © 1998 Mitchell Repair Information Company, LLC
Sunday, August 26, 2001 06:13PM

```
  Minimum Temperature
   Greater Than 0øF (-18øC)  ..............  SAE 10W-30 API SG/CD
  Maximum Temperature
   Less Than 0øF (-18øC)  .................  SAE 5W-30 API SG/CD
Automatic Transmission  ................  ATF M-III or Dexron IIE
Manual Transmission  ...........................  SAE 75W-90 GL-5
Power Steering Fluid  ..........................  Dexron-IIE ATF
Rear Axle  .....................................  SAE 80W-90 GL-5
```

FLUID CAPACITIES

FLUID CAPACITIES TABLE

Application	Quantity
A/C System R-12 Refrigerant Capacity	
1983-85	36 Ozs.
1986-89	
Nippondenso Compressor	22-25 Ozs.
Sanden Compressor	30 Ozs.
1990-91	26.5-28 Ozs.
Automatic Transaxle	7.7-7.9 Qts. (7.3-7.5L)
Cooling System	
1983-85	9.0-10.0 Qts. (8.5-9.5L)
1986-91	
Non-Turbo	7.7 Qts. (7.3L)
Turbo	9.2 Qts. (8.7L)
Engine Oil	4.4-4.7 Qts. (4.2-4.4L)
Fuel Tank	
1983-87	16.6 Gals. (63L)
1988-91	18.5 Gals. (70L)
Manual Transmission Oil	2.1-2.6 Qts. (2.0-2.5L)
Rear Axle Oil	
Turbo	1.3-1.5 Qts. (1.2-1.4L)
Non-Turbo	1.4-1.7 Qts. (1.3-1.6L)

WHEEL & TIRE SPECIFICATIONS

WHEEL & TIRE SPECIFICATIONS TABLE

Wheel Size	Tire Size
15 x 6 in. (Steel Non-Directional)	205/60 VR15
15 x 6.5" (Alloy, Directional)	205/60 VR15
16 x 7.0" (Alloy, Directional)	205/55 R16 88V
15 x 4T (Steel, Temporary)	T135/70 D15
15 x 4T (Alloy, Temporary)	T135/70 D16

TIRE INFLATION

Copyright © 1998 Mitchell Repair Information Company, LLC
Sunday, August 26, 2001 06:13PM

TIRE INFLATION SPECIFICATIONS

Application (1)	Specification psi (kg/cmý)
Normal Loads	32 (2.2)
Temporary Spare	60 (4.2)

(1) - Tire inflation label is located near top of driver's door.

WHEEL TIGHTENING

Tighten wheel lug nuts to 65-87 ft. lbs. (88-118 N.m).

BATTERY SPECIFICATIONS

CAUTION: When battery is disconnected, vehicles equipped with computers may lose memory data. When battery power is restored, driveability problems may exist on some vehicles. These vehicles may require a relearn procedure. See COMPUTER RELEARN PROCEDURES article in the GENERAL INFORMATION Section.

If battery is replaced, new battery should be of the same group number as shown on the original battery's label. Use group 24 batteries with a cold crank rating of 600 amps.

CAUTIONS & WARNINGS

SUPPLEMENTAL RESTRAINT SYSTEM (AIR BAG)

NOTE: See the AIR BAGS article in the ACCESSORIES/SAFETY EQUIPMENT Section.

Modifications or improper maintenance, including incorrect removal and installation of the Supplemental Restraint System (SRS), can adversely affect system performance. DO NOT cover, obstruct or change the steering wheel horn pad in any way, as such action could cause improper function of the system. Use only plain water when cleaning the horn pad. Solvents or cleaners could adversely affect the air bag cover and cause improper deployment of the system.

WARNING: To avoid injury from accidental air bag deployment, read and carefully follow all warnings and service precautions. See appropriate AIR BAGS article in ACCESSORIES/SAFETY EQUIPMENT.

CAUTION: Disconnect negative battery cable before servicing any air bag system, steering column or passenger side dash component. After any repair, turn ignition key to the ON

Copyright © 1998 Mitchell Repair Information Company, LLC
Sunday, August 26, 2001 06:13PM

position from passenger's side of vehicle in case of accidental air bag inflation

ANTI-LOCK BRAKE SYSTEM

The anti-lock brake system contains electronic equipment that can be susceptible to interference caused by improperly installed or high output radio transmitting equipment. Since this interference could cause the possible loss of the anti-lock braking capability, such equipment should be installed by qualified professionals.

On models equipped with anti-lock brake systems, ALWAYS observe the following cautions:

* DO NOT attempt to bleed hydraulic system without first referring to the appropriate ANTI-LOCK BRAKE SYSTEM article in the BRAKES Section.
* DO NOT mix tire sizes. As long as tires remain close to the original diameter, increasing the width is acceptable. Rolling diameter must be identical for all 4 tires. Some manufacturers recommend tires of the same brand, style and type. Failure to follow this precaution may cause inaccurate wheel speed readings.
* Use ONLY recommended brake fluids. DO NOT use silicone brake fluids in an ABS-equipped vehicle.

BATTERY WARNING

WARNING: When battery is disconnected, vehicles equipped with computers may lose memory data. When battery power is restored, driveability problems may exist on some vehicles. These vehicles may require a relearn procedure. See COMPUTER RELEARN PROCEDURES article in GENERAL INFORMATION section.

REPLACING BLOWN FUSES

Before replacing a blown fuse, remove ignition key, turn off all lights and accessories to avoid damaging the electrical system. Be sure to use fuse with the correct indicated amperage rating. The use of an incorrect amperage rating fuse may result in a dangerous electrical system overload.

BRAKE PAD WEAR INDICATOR

Indicator will cause a squealing or scraping noise, warning that brake pads need replacement.

CATALYTIC CONVERTER

Continued operation of vehicle with a severe malfunction could cause converter to overheat, resulting in possible damage to converter and vehicle.

Copyright © 1998 Mitchell Repair Information Company, LLC
Sunday, August 26, 2001 06:13PM

Any modification to the exhaust system on turbo models, which reduces exhaust backpressure, will lead to lean fuel mixtures and excessive spark advance. This could cause serious engine damage.

COOLANT (PROPYLENE-GLYCOL FORMULATIONS)

CAUTION: To avoid possible damage to vehicle use only ethylene-glycol based coolants with a mixture ratio from 44-68% anti-freeze. DO NOT use 100% anti-freeze as it will cause the formation of cooling system deposits. This results in coolant temperatures of over 300ø F (149øC) which can melt plastics. 100% anti-freeze has a freeze point of only -8ø F (-22øC).

CAUTION: Propylene-Glycol Mixtures has a smaller temperature range than Ethylene-Glycol. The temperature range (freeze-boil) of a 50/50 Anti-Freeze/Water Mix is as follows:
Propylene-Glycol -26ø F (-32øC) - 257ø F (125øC)
Ethylene-Glycol -35ø F (-37øC) - 263ø F (128øC)

CAUTION: Propylene-Glycol/Ethylene-Glycol Mixtures can cause the destabilization of various corrosion inhibitors. Also Propylene-Glycol/Ethylene-Glycol has a different specific gravity than Ethylene-Glycol coolant, which will result in inaccurate freeze point calculations.

ELECTROSTATIC DISCHARGE SENSITIVE (ESD) PARTS

WARNING: Many solid state electrical components can be damaged by static electricity (ESD). Some will display a warning label, but many will not. Discharge personal static electricity by touching a metal ground point on the vehicle prior to servicing any ESD sensitive component.

ENGINE OIL

CAUTION: Never use non-detergent or straight mineral oil.

FUEL SYSTEM SERVICE

WARNING: Relieve fuel system pressure prior to servicing any fuel system component (fuel injection models).

HALOGEN BULBS

WARNING: Halogen bulbs contain pressurized gas which may explode if overheated. DO NOT touch glass portion of bulb with bare hands. Eye protection should be worn when handling or working around halogen bulbs.

HEADLIGHT RETRACTOR

CAUTION: Never operate headlight retractor when a person's hands, or

Copyright © 1998 Mitchell Repair Information Company, LLC
Sunday, August 26, 2001 06:13PM

other objects are on or near the headlights. When working on the headlights always remove the headlight retractor fuse.

RADIATOR CAP

CAUTION: Always disconnect the fan motor when working near the radiator fan. The fan is temperature controlled and could start at any time even when the ignition key is in the OFF position. DO NOT loosen or remove radiator cap when cooling system is hot.

RADIATOR FAN

WARNING: Keep hands away from radiator fan. Fan is controlled by a thermostatic switch which may come on or run for up to 15 minutes even after engine is turned off.

TURBOCHARGED MODELS

CAUTION: Do not race engine immediately after starting. When stopping engine, allow engine to idle for approximately 60 seconds before shutting it off. Failure to do so may cause turbocharger damage due to lack of oil flowing to the turbocharger bearings.

WARRANTY INFORMATION

CAUTION: Due to the different warranties offered in various regions and the variety of after-market extended warranties available, please refer to the warranty package that came with the vehicle to verify all warranty options.

BASIC NEW CAR LIMITED WARRANTY

Warrants basic components against defects in materials and workmanship for 36 months or 50,000 miles, whichever occurs first. Tires are covered by a separate warranty offered by the tire manufacturer.

AIR BAG WARRANTY

Covered by the basic warranty for a period of 3 years or 50,000 miles, whichever comes first. For 1991 model, the warranty lasts for a period of 5 years or 60,000 miles, whichever comes first.

ANTI-CORROSION WARRANTY

Covers holes caused by corrosion in body sheet metal panels for 60 months, without respect to mileage, so long as regular inspection and maintenance services are performed.

REPLACEMENT PARTS & ACCESSORIES

Copyright © 1998 Mitchell Repair Information Company, LLC
Sunday, August 26, 2001 06:13PM

Manufacturer supplied parts and accessories are warranted against defects in material or workmanship for 12 months without regard to mileage. If installed by dealer, the part or accessory will be repaired or replaced without charge for parts or labor.

EMISSION CONTROL SYSTEM

Manufacturer warrants to the initial purchaser and each subsequent purchaser that this vehicle is designed, built, and equipped so as to conform at the time of sale with all U.S. and California Air Resources Board emission regulations applicable at the time of manufacture. Manufacturer also warrants that this vehicle is free from defects in materials and workmanship which cause it to fail to conform with applicable regulations within the first 5 years or 50, 000 miles, which ever occurs first.

Emission Performance Warranty Parts List
(60 Months Or 50,000 Miles)

* Air/Fuel Metering System
* Ignition Spark Advance/Retard System
* Evaporative Emission Control
* Positive Crankcase Ventilation System
* Exhaust Gas Recirculation System
* Air Injection System
* Catalyst System
* Electronic Controls Used In Above Systems
* Miscellaneous Items Used In Above Systems

Additional Emission Warranty Parts List For California
(7 Years Or 70,000 Miles)

* Air Flow Meter
* Throttle Body
* E.G.I. Control Unit
* Monolithic Catalytic Converter
* Fuel Pump Assembly

FUSES & CIRCUIT BREAKERS

FUSE PANEL LOCATION

The main fuse block is located at the right rear side of the engine compartment and contains high amperage fuses which protect multiple circuits. Fuse box located above driver's left knee, accessible through a removable cover, contains fuses for individual circuits.

FUSE PANEL & FUSE BLOCK IDENTIFICATION (1983-85)

Copyright © 1998 Mitchell Repair Information Company, LLC
Sunday, August 26, 2001 06:13PM

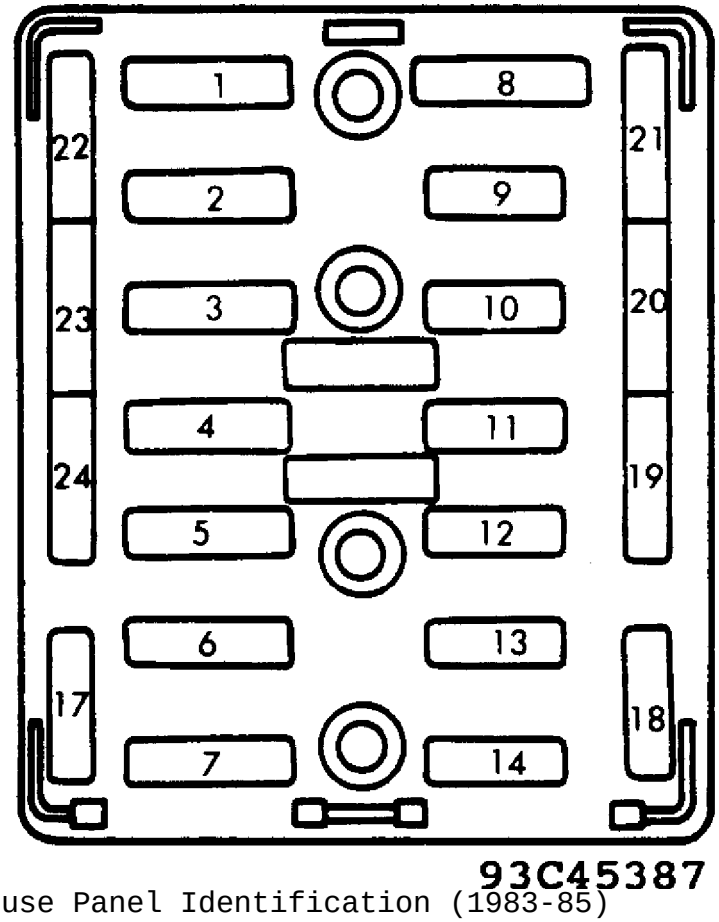

Fig. 6: Fuse Panel Identification (1983-85)
Courtesy of Mazda Motor of America Inc.

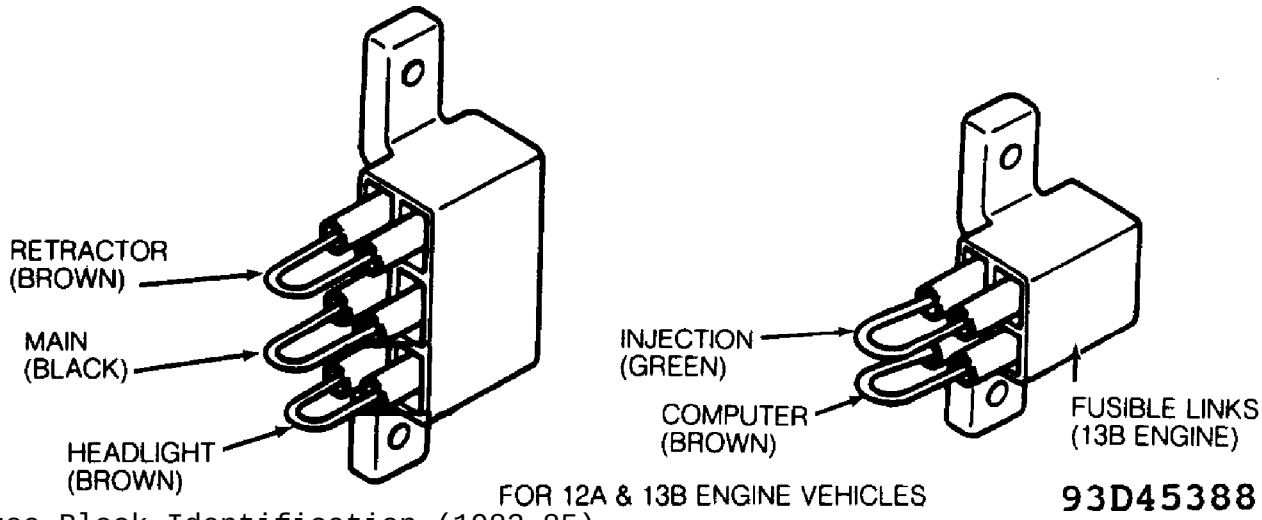

Fig. 7: Fuse Block Identification (1983-85)
Courtesy of Mazda Motor of America Inc.

1 - Empty
2 - 15 Amp
Horn

Copyright © 1998 Mitchell Repair Information Company, LLC
Sunday, August 26, 2001 06:13PM

```
 3 - 15 Amp
      Hazard Warning Lights
 4 - 10 Amp
      Taillights
 5 - 20 Amp
      Roof Opener
 6 - 10 Amp
      Cigarette Lighter
 7 - 20 Amp
      Radio & Antenna
 8 - 15 Amp
      Gauges & Back-Up Lights
 9 - 20 Amp
      Engine
10 - 30 Amp
      Power Windows
11 - 20 Amp
      Heater Blower
12 - 15 Amp
      Rear Defogger
13 - 15 Amp
      Windshield Wipers
14 - 10 Amp
      Rear Wiper
15 - Empty
16 - Empty
17 - Empty
18 - Empty
19 - 15 Amp
      Air Conditioning
20 - Empty
21 - Empty
22 - Empty
23 - Empty
24 - Empty
```

FUSE PANEL & FUSE BLOCK IDENTIFICATION (1986-90)

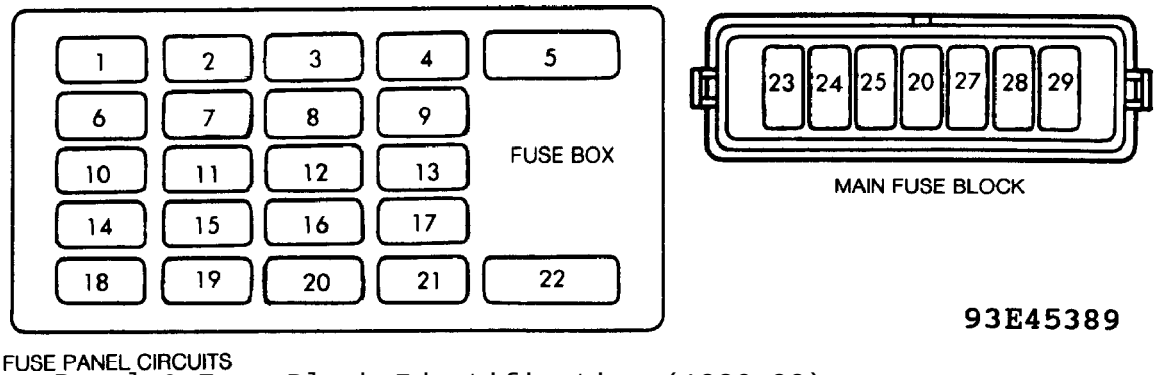

Fig. 8: Fuse Panel & Fuse Block Identification (1986-90)
Courtesy of Mazda Motor of America, Inc.

Copyright © 1998 Mitchell Repair Information Company, LLC
Sunday, August 26, 2001 06:13PM

Fuse & Circuit Breaker Identification

1 - 30 Amp
Rear Defogger
2 - 15 Amp
Headlights
3 - 30 Amp
Power Windows, AAS System
4 - 15 Amp
Cooling Fan System
5 - 15 Amp
Front Foglight
6 - 10 Amp
Power Door Lock, Power Antenna
7 - 15 Amp
Turn Lights, Hazard Lights, Rear Window Defogger, Passive Shoulder Belt
8 - 15 Amp
Front Wiper & Washer, DRL System, Heater, A/C, Diagnostic Module
9 - 30 Amp
Passive Shoulder Belt
10 - 7.5 Amp
Courtesy Lights, Cargo & Interior Lights, Stoplight, Warning & Buzzer Or Chime, Door Lock Cylinder & Ignition Key Cylinder Light, EGI, Emission Control System, Warning & Clock System, Theft System, ECAT
11 - 10 Amp
Back-Up Light, Cruise Control, Shift Lock System, ECAT, Gauges, Clock, Cooling Fan
12 - 10 Amp
Rear Wiper/Washer (Coupe)
13 - 15 Amp
Anti-Lock Brake System
14 - 10 Amp
Turn Lights, Hazard Lights
15 - 15 Amp
ECAT, Fuel System, EGI & Emission Control System
16 - 30 Amp
Convertible Top System
17 - 10 Amp
Cigarette Lighter, Warning & Clock, Remote Control Mirror, Heater & A/C
18 - 30 Amp
Heater & A/C
19 - 20 Amp
Stoplight, Cruise Control
20 - 10 Amp
Rear Window Defogger, Starter, Charge System, Shift Lock, ECAT, Power Antenna & Steering, Horn, Stoplight
21 - 15 Amp
Air Bag, Diagnostic Module, (Conv.) Sun Roof, Anti-Lock Brake

Copyright © 1998 Mitchell Repair Information Company, LLC
Sunday, August 26, 2001 06:13PM

System, AAS System (Coupe)
22 - 20 Amp
Audio System
23 - 60 Amp
BTN, Light Switch, Heater, A/C
24 - 30 Amp
Headlights
25 - 30 Amp
Headlight Retractor
26 - 30 Amp
EGI & Emission System
27 - 100 Amp
Starter & Charge System
28 - 60 Amp
Anti-Lock Brake System
29 - 30 Amp
Back-Up Battery (Air Bag)

FUSE PANEL & FUSE BLOCK IDENTIFICATION (1991)

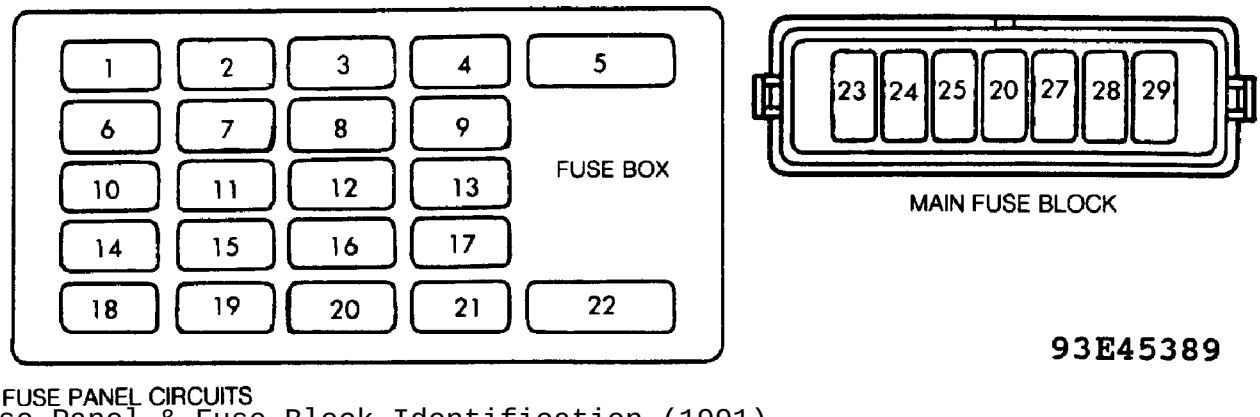

FUSE PANEL CIRCUITS

Fig. 9: Fuse Panel & Fuse Block Identification (1991)
Courtesy of Mazda Motor of America, Inc.

Fuse & Circuit Breaker Identification

1 - 20 Amp
Audio System
2 - 15 Amp
Sun Roof, Anti-Lock Brake System
2 - 15 Amp (Convertible)
Air Bag, Diagnostic Module
3 - 10 Amp
Rear Window Defogger, Starter, Charge System, Shift Lock System, ECAT, Power Antenna, Horn, Stoplight, Power Steering
4 - 20 Amp
Stoplight, Cruise Control System
5 - 30 Amp
Heater & A/C
6 - 10 Amp
Clock, Remote Control Mirror, Heater & A/C

Copyright © 1998 Mitchell Repair Information Company, LLC
Sunday, August 26, 2001 06:13PM

7 - 30 Amp
Convertible Top System
8 - 15 Amp
ECAT, Fuel System, EGI & Emission Control System
9 - 10 Amp
Turn Lights, Hazard Lights
10 - 15 Amp (Except Convertible)
Anti-Lock Brake System
11 - 10 Amp (Except Convertible)
Rear Wiper & Washer
12 - 10 Amp
Back-Up Light, Cruise Control System, Shift Lock System, ECAT, Gauges, Clock, Cooling Fan
13 - 7.5 Amp
Cargo Light, Courtesy Lights, Interior Lights, Stoplights, Warning & Buzzer Or Chime, Door Lock Cylinder & Ignition Key Cylinder Light, EGI, Emission Control System, Warning Clock System, Theft System, ECAT
14 - 30 Amp (Except Convertible)
Passive Shoulder Belt
15 - 15 Amp
Front Wiper & Washer, DRL System Heater & A/C Diagnostic Module
16 - 15 Amp
Turn Lights, Hazard Lights, Rear Window Defroster, Passive Shoulder Belt
17 - 10 Amp
Power Door Lock System & Antenna
18 - 15 Amp
Front Foglight
19 - 15 Amp
Cooling Fan
20 - 30 Amp
Power Window
21 - 15 Amp
Headlight
22 - 30 Amp
Rear Window Defroster
23 - 30 Amp
EGI
24 - Blank
24 - 30 Amp (Convertible)
Air Bag
25 - 30 Amp
Head
26 - 100 Amp
Main
27 - 60 Amp (Except Convertible)
Anti-Lock Brake System
28 - 60 Amp
BTN
29 - 30 Amp

Copyright © 1998 Mitchell Repair Information Company, LLC
Sunday, August 26, 2001 06:13PM

Retractor

END OF ARTICLE

SCHEDULED SERVICES
Article Text

Copyright © 1998 Mitchell Repair Information Company, LLC
Sunday, August 26, 2001 06:13PM

ARTICLE BEGINNING

1983-91 MAINTENANCE
Mazda Maintenance & Service Intervals

RX7

*** PLEASE READ THIS FIRST ***

NOTE: All SERVICE SCHEDULES are listed for normal service vehicles. If vehicle is operated under severe service conditions, see SEVERE SERVICE REQUIREMENTS (PERFORM W/SERVICE SCHEDULES) for items requiring additional maintenance.

NOTE: This article contains scheduled maintenance service information. Fluid types and capacities listed with each service in this article are only those necessary to perform that scheduled service. For specifications pertaining to fluid capacities for the entire vehicle, fuse and circuit breaker identification, wheel and tire size, battery type, warranty information, or model identification refer to the MAINTENANCE INFORMATION article in this section.

CAUTIONS & WARNINGS

SUPPLEMENTAL RESTRAINT SYSTEM (AIR BAG)

NOTE: See the AIR BAGS article in the ACCESSORIES/SAFETY EQUIPMENT Section.

Modifications or improper maintenance, including incorrect removal and installation of the Supplemental Restraint System (SRS), can adversely affect system performance. DO NOT cover, obstruct or change the steering wheel horn pad in any way, as such action could cause improper function of the system. Use only plain water when cleaning the horn pad. Solvents or cleaners could adversely affect the air bag cover and cause improper deployment of the system.

WARNING: To avoid injury from accidental air bag deployment, read and carefully follow all warnings and service precautions. See appropriate AIR BAGS article in ACCESSORIES/SAFETY EQUIPMENT.

CAUTION: Disconnect negative battery cable before servicing any air bag system, steering column or passenger side dash component. After any repair, turn ignition key to the ON position from passenger's side of vehicle in case of accidental air bag inflation

ANTI-LOCK BRAKE SYSTEM

Copyright © 1998 Mitchell Repair Information Company, LLC
Sunday, August 26, 2001 06:13PM

The anti-lock brake system contains electronic equipment that can be susceptible to interference caused by improperly installed or high output radio transmitting equipment. Since this interference could cause the possible loss of the anti-lock braking capability, such equipment should be installed by qualified professionals.

On models equipped with anti-lock brake systems, ALWAYS observe the following cautions:

* DO NOT attempt to bleed hydraulic system without first referring to the appropriate ANTI-LOCK BRAKE SYSTEM article in the BRAKES Section.
* DO NOT mix tire sizes. As long as tires remain close to the original diameter, increasing the width is acceptable. Rolling diameter must be identical for all 4 tires. Some manufacturers recommend tires of the same brand, style and type. Failure to follow this precaution may cause inaccurate wheel speed readings.
* Use ONLY recommended brake fluids. DO NOT use silicone brake fluids in an ABS-equipped vehicle.

BATTERY WARNING

WARNING: When battery is disconnected, vehicles equipped with computers may lose memory data. When battery power is restored, driveability problems may exist on some vehicles. These vehicles may require a relearn procedure. See COMPUTER RELEARN PROCEDURES article in GENERAL INFORMATION section.

REPLACING BLOWN FUSES

Before replacing a blown fuse, remove ignition key, turn off all lights and accessories to avoid damaging the electrical system. Be sure to use fuse with the correct indicated amperage rating. The use of an incorrect amperage rating fuse may result in a dangerous electrical system overload.

BRAKE PAD WEAR INDICATOR

Indicator will cause a squealing or scraping noise, warning that brake pads need replacement.

CATALYTIC CONVERTER

Continued operation of vehicle with a severe malfunction could cause converter to overheat, resulting in possible damage to converter and vehicle.

Any modification to the exhaust system on turbo models, which reduces exhaust backpressure, will lead to lean fuel mixtures and excessive spark advance. This could cause serious engine damage.

COOLANT (PROPYLENE-GLYCOL FORMULATIONS)

Copyright © 1998 Mitchell Repair Information Company, LLC
Sunday, August 26, 2001 06:13PM

CAUTION: To avoid possible damage to vehicle use only ethylene-glycol based coolants with a mixture ratio from 44-68% anti-freeze. DO NOT use 100% anti-freeze as it will cause the formation of cooling system deposits. This results in coolant temperatures of over 300ø F (149øC) which can melt plastics. 100% anti-freeze has a freeze point of only -8ø F (-22øC).

CAUTION: Propylene-Glycol Mixtures has a smaller temperature range than Ethylene-Glycol. The temperature range (freeze-boil) of a 50/50 Anti-Freeze/Water Mix is as follows:
Propylene-Glycol -26ø F (-32øC) - 257ø F (125øC)
Ethylene-Glycol -35ø F (-37øC) - 263ø F (128øC)

CAUTION: Propylene-Glycol/Ethylene-Glycol Mixtures can cause the destabilization of various corrosion inhibitors. Also Propylene-Glycol/Ethylene-Glycol has a different specific gravity than Ethylene-Glycol coolant, which will result in inaccurate freeze point calculations.

ELECTROSTATIC DISCHARGE SENSITIVE (ESD) PARTS

WARNING: Many solid state electrical components can be damaged by static electricity (ESD). Some will display a warning label, but many will not. Discharge personal static electricity by touching a metal ground point on the vehicle prior to servicing any ESD sensitive component.

ENGINE OIL

CAUTION: Never use non-detergent or straight mineral oil.

FUEL SYSTEM SERVICE

WARNING: Relieve fuel system pressure prior to servicing any fuel system component (fuel injection models).

HALOGEN BULBS

WARNING: Halogen bulbs contain pressurized gas which may explode if overheated. DO NOT touch glass portion of bulb with bare hands. Eye protection should be worn when handling or working around halogen bulbs.

HEADLIGHT RETRACTOR

CAUTION: Never operate headlight retractor when a person's hands, or other objects are on or near the headlights. When working on the headlights always remove the headlight retractor fuse.

RADIATOR CAP

Copyright © 1998 Mitchell Repair Information Company, LLC
Sunday, August 26, 2001 06:13PM

CAUTION: Always disconnect the fan motor when working near the radiator fan. The fan is temperature controlled and could start at any time even when the ignition key is in the OFF position. DO NOT loosen or remove radiator cap when cooling system is hot.

RADIATOR FAN

WARNING: Keep hands away from radiator fan. Fan is controlled by a thermostatic switch which may come on or run for up to 15 minutes even after engine is turned off.

TURBOCHARGED MODELS

CAUTION: Do not race engine immediately after starting. When stopping engine, allow engine to idle for approximately 60 seconds before shutting it off. Failure to do so may cause turbocharger damage due to lack of oil flowing to the turbocharger bearings.

SERVICE POINT LOCATIONS

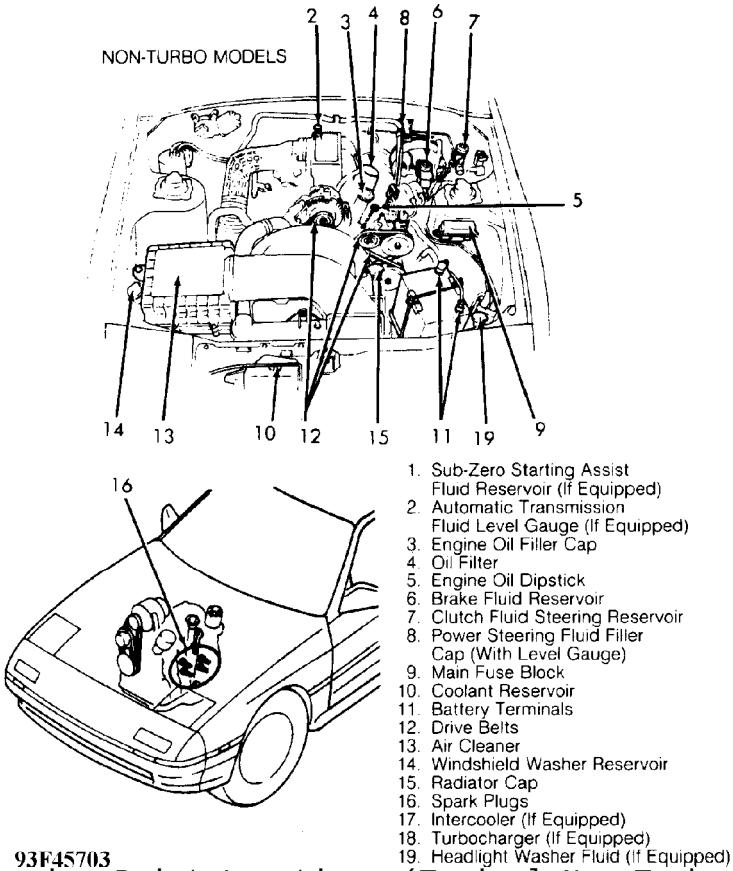

1. Sub-Zero Starting Assist Fluid Reservoir (If Equipped)
2. Automatic Transmission Fluid Level Gauge (If Equipped)
3. Engine Oil Filler Cap
4. Oil Filter
5. Engine Oil Dipstick
6. Brake Fluid Reservoir
7. Clutch Fluid Steering Reservoir
8. Power Steering Fluid Filler Cap (With Level Gauge)
9. Main Fuse Block
10. Coolant Reservoir
11. Battery Terminals
12. Drive Belts
13. Air Cleaner
14. Windshield Washer Reservoir
15. Radiator Cap
16. Spark Plugs
17. Intercooler (If Equipped)
18. Turbocharger (If Equipped)
19. Headlight Washer Fluid (If Equipped)

Fig. 1: Service Point Locations (Typical Non-Turbo Engine) Courtesy of Mazda Motor of America, Inc.

Copyright © 1998 Mitchell Repair Information Company, LLC
Sunday, August 26, 2001 06:13PM

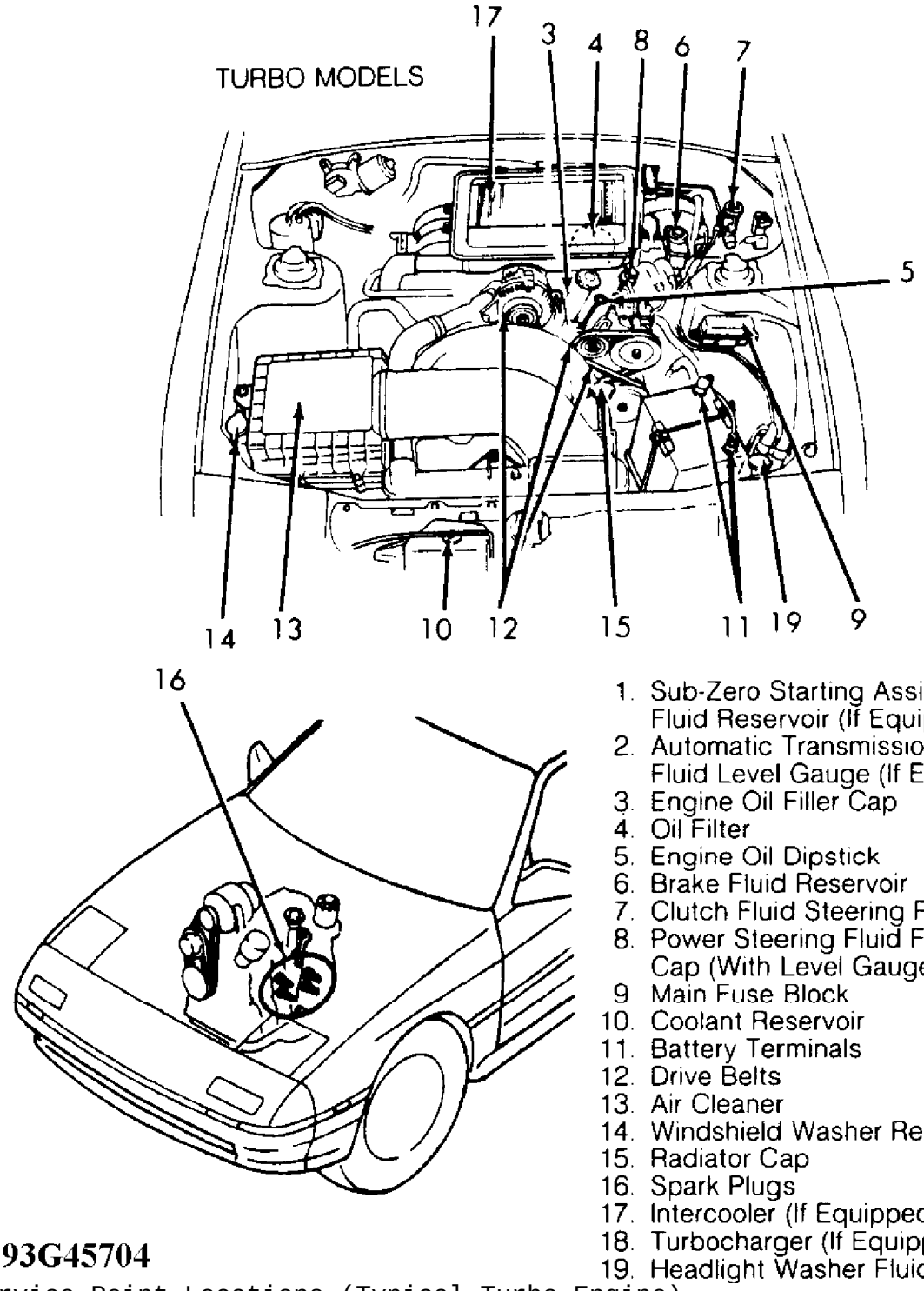

1. Sub-Zero Starting Assist Fluid Reservoir (If Equipped)
2. Automatic Transmission Fluid Level Gauge (If Equipped)
3. Engine Oil Filler Cap
4. Oil Filter
5. Engine Oil Dipstick
6. Brake Fluid Reservoir
7. Clutch Fluid Steering Reservoir
8. Power Steering Fluid Filler Cap (With Level Gauge)
9. Main Fuse Block
10. Coolant Reservoir
11. Battery Terminals
12. Drive Belts
13. Air Cleaner
14. Windshield Washer Reservoir
15. Radiator Cap
16. Spark Plugs
17. Intercooler (If Equipped)
18. Turbocharger (If Equipped)
19. Headlight Washer Fluid (If Equipped)

Fig. 2: Service Point Locations (Typical Turbo Engine)
Courtesy of Mazda Motor of America, Inc.

Copyright © 1998 Mitchell Repair Information Company, LLC
Sunday, August 26, 2001 06:13PM

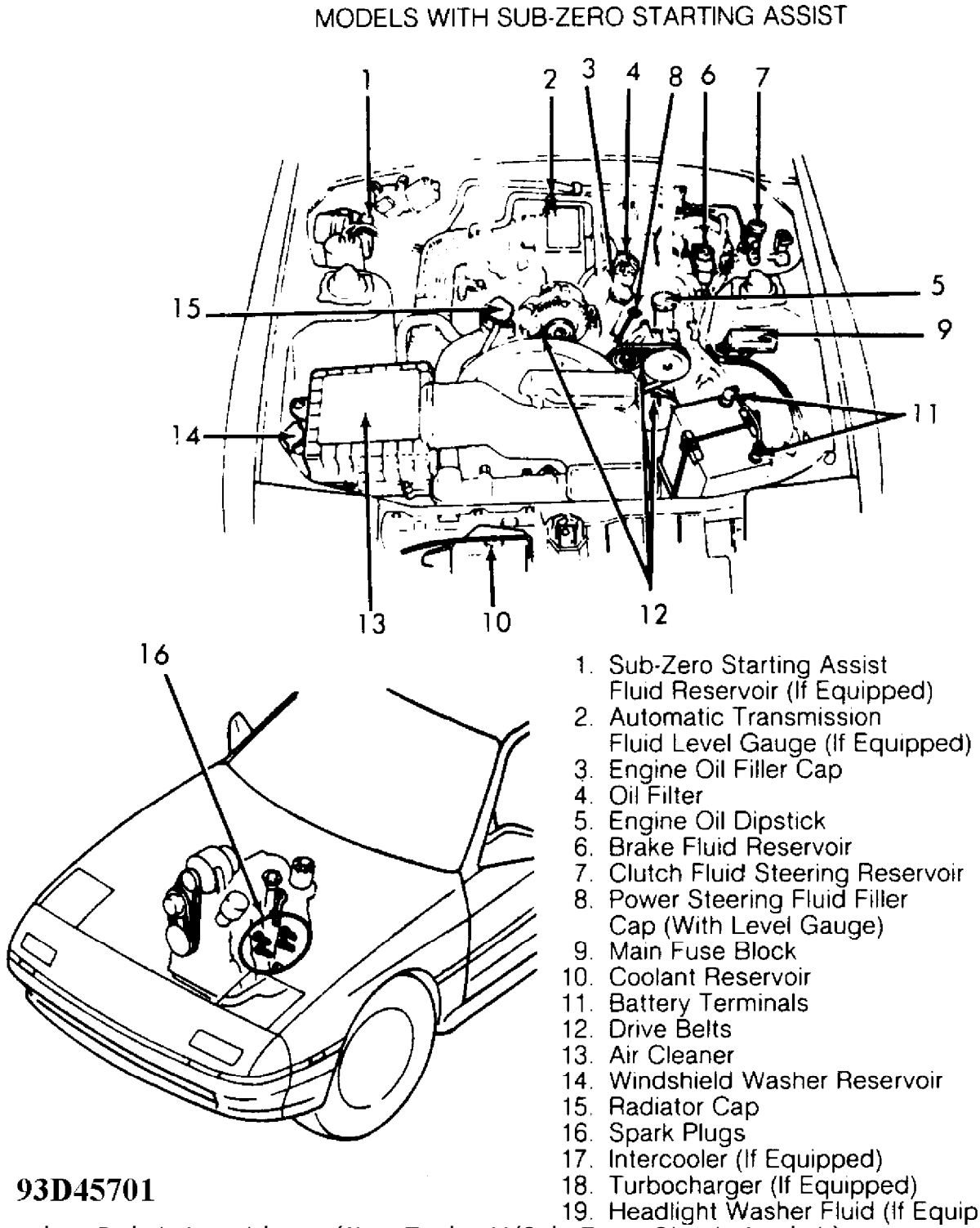

1. Sub-Zero Starting Assist Fluid Reservoir (If Equipped)
2. Automatic Transmission Fluid Level Gauge (If Equipped)
3. Engine Oil Filler Cap
4. Oil Filter
5. Engine Oil Dipstick
6. Brake Fluid Reservoir
7. Clutch Fluid Steering Reservoir
8. Power Steering Fluid Filler Cap (With Level Gauge)
9. Main Fuse Block
10. Coolant Reservoir
11. Battery Terminals
12. Drive Belts
13. Air Cleaner
14. Windshield Washer Reservoir
15. Radiator Cap
16. Spark Plugs
17. Intercooler (If Equipped)
18. Turbocharger (If Equipped)
19. Headlight Washer Fluid (If Equipped)

Fig. 3: Service Point Locations (Non-Turbo W/Sub-Zero Start Assist)
Courtesy of Mazda Motor of America, Inc.

Copyright © 1998 Mitchell Repair Information Company, LLC
Sunday, August 26, 2001 06:13PM

TURBO MODELS WITH SUB-ZERO STARTING ASSIST

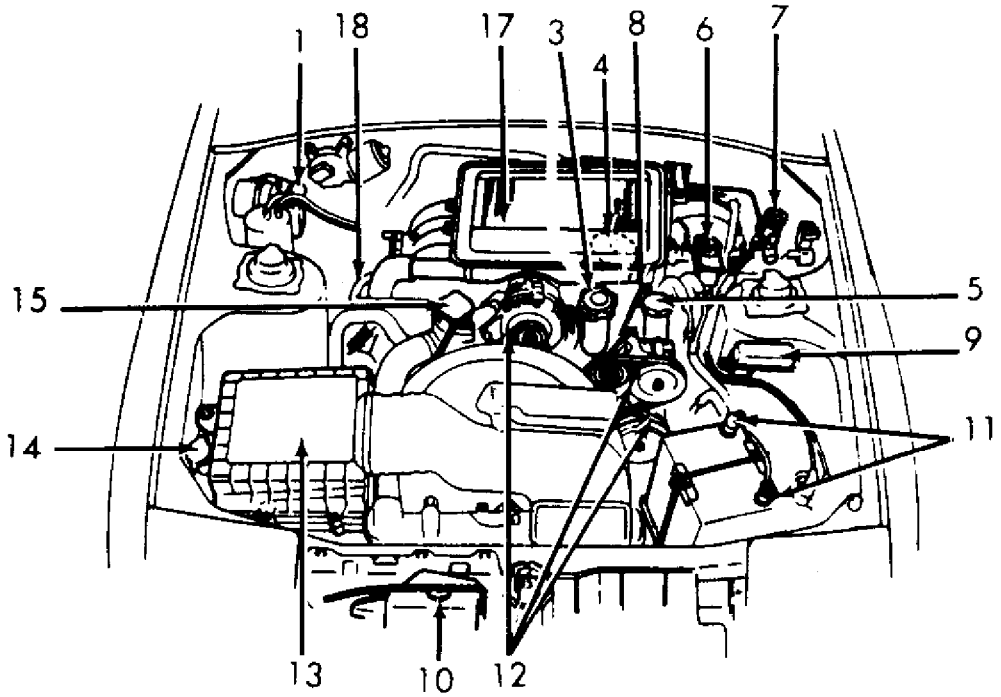

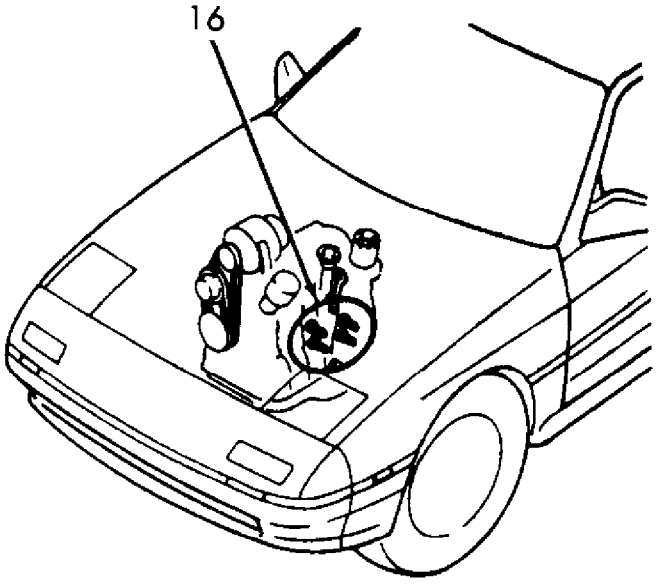

93E45702

1. Sub-Zero Starting Assist Fluid Reservoir (If Equipped)
2. Automatic Transmission Fluid Level Gauge (If Equipped)
3. Engine Oil Filler Cap
4. Oil Filter
5. Engine Oil Dipstick
6. Brake Fluid Reservoir
7. Clutch Fluid Steering Reservoir
8. Power Steering Fluid Filler Cap (With Level Gauge)
9. Main Fuse Block
10. Coolant Reservoir
11. Battery Terminals
12. Drive Belts
13. Air Cleaner
14. Windshield Washer Reservoir
15. Radiator Cap
16. Spark Plugs
17. Intercooler (If Equipped)
18. Turbocharger (If Equipped)
19. Headlight Washer Fluid (If Equipped)

Fig. 4: Service Point Locations (Turbo W/Sub-Zero Start Assist)
Courtesy of Mazda Motor of America, Inc.

SEVERE & NORMAL SERVICE DEFINITIONS

NOTE: Use the Severe Service schedule if the vehicle to be serviced is operated under ANY (one or more) of these conditions:

SCHEDULED SERVICES
Article Text (p. 8)

Copyright © 1998 Mitchell Repair Information Company, LLC
Sunday, August 26, 2001 06:13PM

Service is recommended at mileage intervals based on vehicle operation. Service schedules are based on the following primary operating conditions:

Normal Service

* Driven More Than 10 Miles Daily
* No Operating Conditions From Severe Service Schedule

Severe Service (Unique Driving Conditions)

* Repeated Short Distance Driving
* Dusty Conditions
* Extended Use Of Brakes
* Salt Or Other Corrosive Materials On The Roads
* Rough Or Muddy Roads
* Extended Idling Or Low Speed Operation
* Extended Operation In Extreme Temperatures

SEVERE SERVICE REQUIREMENTS (PERFORM W/SERVICE SCHEDULES)

NOTE: The following services are to be performed on vehicles subjected to severe service. See SEVERE & NORMAL SERVICE DEFINITIONS. This service is to be performed in addition to the normal services listed in the NORMAL MAINTENANCE SERVICE SCHEDULES.

SEVERE SERVICE CONDITIONS/ACTIONS TABLE

Condition	Action	Item	Perform Every (1)
Repeated Short Distance Driving	Replace	Turbo: Oil & Filter	3,000 Miles or 3 Months
	Replace	Non-Turbo: Oil & Filter	5,000 Miles or 5 Months
	Replace	M/T Fluid	30,000 Miles
	Replace	Rear Axle Oil	30,000 Miles
Dusty Conditions	Replace	Turbo: Oil & Filter	3,000 Miles or 3 Months
	Replace	Non-Turbo: Oil & Filter	5,000 Miles or 5 Months
	Replace	M/T Fluid	30,000 Miles
	Replace	Rear Axle Oil	30,000 Miles

Copyright © 1998 Mitchell Repair Information Company, LLC
Sunday, August 26, 2001 06:13PM

Extended Use Of Brakes	Replace	Turbo: Oil & Filter	3,000 Miles or 3 Months
		Non-Turbo: Oil & Filter	5,000 Miles or 5 Months
		M/T Fluid	30,000 Miles
		Rear Axle Oil	30,000 Miles
Salt Or Other Corrosive Materials On The Roads	Replace	Turbo: Oil & Filter	3,000 Miles or 3 Months
		Non-Turbo: Oil & Filter	5,000 Miles or 5 Months
		M/T Fluid	30,000 Miles
		Rear Axle Oil	30,000 Miles
Rough Or Muddy Roads	Replace	Turbo: Oil & Filter	3,000 Miles or 3 Months
		Non-Turbo: Oil & Filter	5,000 Miles or 5 Months
		M/T Fluid	30,000 Miles
		Rear Axle Oil	30,000 Miles
Extended Idling Or Low Speed Operation	Replace	Turbo: Oil & Filter	3,000 Miles or 3 Months
		Non-Turbo: Oil & Filter	5,000 Miles or 5 Months
		M/T Fluid	30,000 Miles
		Rear Axle Oil	30,000 Miles
Extended Operation In Extreme Temperatures	Replace	Turbo: Oil & Filter	3,000 Miles or 3 Months
		Non-Turbo: Oil & Filter	5,000 Miles or 5 Months
		M/T Fluid	30,000 Miles
		Rear Axle Oil	30,000 Miles

(1) - Perform these services at the mileage or number of months

SCHEDULED SERVICES
Article Text (p. 10)

Copyright © 1998 Mitchell Repair Information Company, LLC
Sunday, August 26, 2001 06:13PM

³ (since the last time), whichever comes first. ³
ÀÄÄÄ

SCHEDULED SERVICES
Article Text (p. 11)

Copyright © 1998 Mitchell Repair Information Company, LLC
Sunday, August 26, 2001 06:13PM

15,000 MILE (24,000 KM) SERVICE

15,000 MILE (24,000 KM) SERVICE

Service Or Inspect
Verify Last Major Service Was Performed
Idle Speed
Check Fluid Levels and Fluid Condition
Inspect Coolant Level, Hoses and Clamps
Check Coolant Strength
Check Exhaust System & Heat Shielding
Check C/V Joint Boots
Clean Battery and Battery Terminals
Inspect/Adjust Accessory Drive Belts (Replace if Required)
Inspect Fuel/Tank/Cap/Lines
Check Operation of Horn, Wipers/Washers & All Exterior Lights
Inspect Condition of Wiper Blades
Check Headlight Alignment
Check Body Drain Holes
Check Seat Belt Webbing and Release Mechanisms
Check Parking Brake Operation
Check Shift Interlock Operation
Lubricate Weatherstripping with Silicone
Lubricate Door Hinges
Lubricate Door Locks
Check Steering Rack Boots
Inspect Steering Linkage/Front Suspension
Lubricate Steering Linkage & Suspension

Copyright © 1998 Mitchell Repair Information Company, LLC
Sunday, August 26, 2001 06:13PM

³ ³ Lubricate Chassis	³
³ ³ Inspect Brake System Hoses & Lines	³
³ ³ Inspect Front Brake Pads, Rotors and Calipers	³
³ ³ Lubricate Caliper Slide Rails	³
³ ³ Inspect Rear Brake Pads, Rotors and Calipers	³
³ ³ Inspect Shocks/Struts for Leakage	³
³ ³ Inspect Tire Wear Pattern	³
³ ³ Rotate Tires and Adjust Air Pressure (Including Spare)	³
³ Replace	³
³ ³ Engine Oil	³
³ ³ Oil Filter	³
³ Lubrication Specifications	³

³ Application	Specification ³
³	³
³ Engine Oil	³
³ Minimum Temperature	³
³ Greater Than 0øF (-18øC)	SAE 10W-30 API SG/CD ³
³ Maximum Temperature	³
³ Less Than 0øF (-18øC)	SAE 5W-30 API SG/CD ³

³ Application	Quantity ³
³	³
³ Cooling System	³
³ 1983-85	9.0-10.0 Qts. (8.5-9.5L) ³
³ 1986-91	³
³ Turbo	9.2 Qts. (8.7L) ³
³ Non-Turbo	7.7 Qts. (7.3L) ³
³ Engine Oil	4.4-4.7 Qts. (4.2-4.4L) ³

22,500 MILE (36,000 KM) SERVICE

22,500 MILE (36,000 KM) SERVICE

³ Service Or Inspect	³
³ ³ Verify Last Major Service Was Performed	³

Copyright © 1998 Mitchell Repair Information Company, LLC
Sunday, August 26, 2001 06:13PM

	Check Fluid Levels and Fluid Condition
	Inspect Coolant Level, Hoses and Clamps
	Inspect Exhaust System
	Inspect C/V Joint Boots
	Inspect Brake Linings
	Lubricate Chassis
	Replace
	Engine Oil
	Oil Filter
	Lubrication Specifications

Application	Specification
Engine Oil	
Minimum Temperature	
Greater Than 0øF (-18øC)	SAE 10W-30 API SG/CD
Maximum Temperature	
Less Than 0øF (-18øC)	SAE 5W-30 API SG/CD

	Fluid Capacities

Application	Quantity
Engine Oil	4.4-4.7 Qts. (4.2-4.4L)

30,000 MILE (48,000 KM) SERVICE

30,000 MILE (48,000 KM) SERVICE

	Service Or Inspect
	Verify Last Major Service Was Performed
	Check Fluid Levels and Fluid Condition
	Inspect Coolant Level, Hoses and Clamps
	Engine Coolant Level Warning System
	Check Exhaust System & Heat Shielding
	Clean Battery and Battery Terminals

SCHEDULED SERVICES
Article Text (p. 14)

Copyright © 1998 Mitchell Repair Information Company, LLC
Sunday, August 26, 2001 06:13PM

Inspect/Adjust Accessory Drive Belts (Replace if Required)
Inspect Underhood Wiring Harnesses and Connections
Inspect Emission Control Vacuum Hoses and Connections
Inspect Thermostatic Air Cleaner (If Equipped)
Inspect Distributor Cap & Rotor (If Equipped)
Inspect Spark Plug Wires
Inspect PCV Valve and Hoses
Inspect EGR Valve and Hoses
Check Ignition Timing
Idle Speed
Inspect Fuel/Tank/Cap/Lines
Check Operation of Horn, Wipers/Washers & All Exterior Lights
Inspect Condition of Wiper Blades
Check Headlight Alignment
Check Body Drain Holes
Check Seat Belt Webbing and Release Mechanisms
Check Parking Brake Operation
Check Shift Interlock Operation
Lubricate Weatherstripping with Silicone
Lubricate Door Hinges
Lubricate Door Locks
Check Steering Rack Boots
Check C/V Joint Boots
Inspect Steering Linkage/Front Suspension
Lubricate Steering Linkage & Suspension
Lubricate Chassis

SCHEDULED SERVICES
Article Text (p. 15)

Copyright © 1998 Mitchell Repair Information Company, LLC
Sunday, August 26, 2001 06:13PM

	Suspension Bushings, Springs, Arms & Rear Jounce Bumpers
	Toe Control Hub & Control Link
	Lubricate Front Wheel Bearings
	Inspect Brake System Hoses & Lines
	Inspect Front Brake Pads, Rotors and Calipers
	Lubricate Caliper Slide Rails
	Inspect Rear Brake Pads, Rotors and Calipers
	Inspect/Repack Rear Wheel Bearings
	Inspect Shocks/Struts for Leakage
	Inspect Tire Wear Pattern
	Rotate Tires and Adjust Air Pressure (Including Spare)
	Replace
	Engine Oil
	Oil Filter
	Air Filter Element
	Spark Plugs
	PCV Filter
	Drain, Flush and Refill Engine Coolant
	Manual Transmission Oil
	Rear Axle Oil

Lubrication Specifications

Application	Specification
Engine Oil	
Minimum Temperature	
Greater Than 0øF (-18øC)	SAE 10W-30 API SG/CD
Maximum Temperature	
Less Than 0øF (-18øC)	SAE 5W-30 API SG/CD
Manual Transmission	SAE 75W-90 GL-5
Rear Axle	SAE 80W-90 GL-5

SCHEDULED SERVICES
Article Text (p. 16)

Copyright © 1998 Mitchell Repair Information Company, LLC
Sunday, August 26, 2001 06:13PM

Fluid Capacities	
Application	Quantity
Automatic Transmission Fluid	7.7-7.9 Qts. (7.3-7.5L)
Cooling System	
1983-85	9.0-10.0 Qts. (8.5-9.5L)
1986-91	
Turbo	9.2 Qts. (8.7L)
Non-Turbo	7.7 Qts. (7.3L)
Engine Oil	4.4-4.7 Qts. (4.2-4.4L)
Manual Transmission Oil	2.1-2.6 Qts. (2.0-2.5L)
Rear Axle Oil	
Turbo	1.3-1.5 Qts. (1.2-1.4L)
Non-Turbo	1.4-1.7 Qts. (1.3-1.6L)

Service Labor Times	
Application	Hours
Automatic Transmission	2.1
Manual Transmission	2.1

37,500 MILE (60,000 KM) SERVICE

37,500 MILE (60,000 KM) SERVICE

Service Or Inspect
Verify Last Major Service Was Performed
Check Fluid Levels and Fluid Condition
Inspect Coolant Level, Hoses and Clamps
Inspect Exhaust System
Inspect C/V Joint Boots
Inspect Brake Linings
Lubricate Chassis
Replace
Engine Oil
Oil Filter
Lubrication Specifications

SCHEDULED SERVICES
Article Text (p. 17)

Copyright © 1998 Mitchell Repair Information Company, LLC
Sunday, August 26, 2001 06:13PM

Application	Specification
Engine Oil	
Minimum Temperature	
Greater Than 0øF (-18øC)	SAE 10W-30 API SG/CD
Maximum Temperature	
Less Than 0øF (-18øC)	SAE 5W-30 API SG/CD

Fluid Capacities

Application	Quantity
Engine Oil	4.4-4.7 Qts. (4.2-4.4L)

45,000 MILE (72,000 KM) SERVICE

45,000 MILE (72,000 KM) SERVICE

	Service Or Inspect
	Verify Last Major Service Was Performed
	Idle Speed
	Check Fluid Levels and Fluid Condition
	Inspect Coolant Level, Hoses and Clamps
	Check Coolant Strength
	Check Exhaust System & Heat Shielding
	Check C/V Joint Boots
	Clean Battery and Battery Terminals
	Inspect/Adjust Accessory Drive Belts (Replace if Required)
	Inspect Fuel/Tank/Cap/Lines
	Check Operation of Horn, Wipers/Washers & All Exterior Lights
	Inspect Condition of Wiper Blades
	Check Headlight Alignment
	Check Body Drain Holes
	Check Seat Belt Webbing and Release Mechanisms

Copyright © 1998 Mitchell Repair Information Company, LLC
Sunday, August 26, 2001 06:13PM

³ ³ Check Parking Brake Operation ³
³ ³ Check Shift Interlock Operation ³
³ ³ Lubricate Weatherstripping with Silicone ³
³ ³ Lubricate Door Hinges ³
³ ³ Lubricate Door Locks ³
³ ³ Check Steering Rack Boots ³
³ ³ Inspect Steering Linkage/Front Suspension ³
³ ³ Lubricate Steering Linkage & Suspension ³
³ ³ Lubricate Chassis ³
³ ³ Inspect Brake System Hoses & Lines ³
³ ³ Inspect Front Brake Pads, Rotors and Calipers ³
³ ³ Lubricate Caliper Slide Rails ³
³ ³ Inspect Rear Brake Pads, Rotors and Calipers ³
³ ³ Inspect Shocks/Struts for Leakage ³
³ ³ Inspect Tire Wear Pattern ³
³ ³ Rotate Tires and Adjust Air Pressure (Including Spare) ³
³ Replace ³
³ ³ Engine Oil ³
³ ³ Oil Filter ³
³ Lubrication Specifications ³

³ Application	Specification ³
³	³
³ Engine Oil	³
³ Minimum Temperature	³
³ Greater Than 0øF (-18øC)	SAE 10W-30 API SG/CD ³
³ Maximum Temperature	³
³ Less Than 0øF (-18øC)	SAE 5W-30 API SG/CD ³

³ Application	Quantity ³
³	³

Copyright © 1998 Mitchell Repair Information Company, LLC
Sunday, August 26, 2001 06:13PM

Cooling System	
1983-85	9.0-10.0 Qts. (8.5-9.5L)
1986-91	
Turbo	9.2 Qts. (8.7L)
Non-Turbo	7.7 Qts. (7.3L)
Engine Oil	4.4-4.7 Qts. (4.2-4.4L)

52,500 MILE (84,000 KM) SERVICE

52,500 MILE (84,000 KM) SERVICE

Service Or Inspect	
Verify Last Major Service Was Performed	
Check Fluid Levels and Fluid Condition	
Inspect Coolant Level, Hoses and Clamps	
Inspect Exhaust System	
Inspect C/V Joint Boots	
Inspect Brake Linings	
Lubricate Chassis	
Replace	
Engine Oil	
Oil Filter	

Lubrication Specifications	
Application	Specification
Engine Oil	
Minimum Temperature	
Greater Than 0øF (-18øC)	SAE 10W-30 API SG/CD
Maximum Temperature	
Less Than 0øF (-18øC)	SAE 5W-30 API SG/CD
Fluid Capacities	
Application	Quantity
Engine Oil	4.4-4.7 Qts. (4.2-4.4L)

60,000 MILE (96,000 KM) SERVICE

SCHEDULED SERVICES
Article Text (p. 20)

Copyright © 1998 Mitchell Repair Information Company, LLC
Sunday, August 26, 2001 06:13PM

60,000 MILE (96,000 KM) SERVICE

Service Or Inspect
Verify Last Major Service Was Performed
Check Fluid Levels and Fluid Condition
Inspect Coolant Level, Hoses and Clamps
Engine Coolant Level Warning System
Check Exhaust System & Heat Shielding
Clean Battery and Battery Terminals
Inspect/Adjust Accessory Drive Belts (Replace if Required)
Inspect Underhood Wiring Harnesses and Connections
Inspect Emission Control Vacuum Hoses and Connections
Inspect Thermostatic Air Cleaner (If Equipped)
Inspect Distributor Cap & Rotor (If Equipped)
Inspect Spark Plug Wires
Inspect PCV Valve and Hoses
Inspect EGR Valve and Hoses
Check Ignition Timing
Idle Speed
Inspect Fuel/Tank/Cap/Lines
Check Operation of Horn, Wipers/Washers & All Exterior Lights
Inspect Condition of Wiper Blades
Check Headlight Alignment
Check Body Drain Holes
Check Seat Belt Webbing and Release Mechanisms
Check Parking Brake Operation
Check Shift Interlock Operation

SCHEDULED SERVICES
Article Text (p. 21)

Copyright © 1998 Mitchell Repair Information Company, LLC
Sunday, August 26, 2001 06:13PM

	Lubricate Weatherstripping with Silicone
	Lubricate Door Hinges
	Lubricate Door Locks
	Check Steering Rack Boots
	Check C/V Joint Boots
	Inspect Steering Linkage/Front Suspension
	Lubricate Steering Linkage & Suspension
	Lubricate Chassis
	Suspension Bushings, Springs, Arms & Rear Jounce Bumpers
	Toe Control Hub & Control Link
	Lubricate Front Wheel Bearings
	Inspect Brake System Hoses & Lines
	Inspect Front Brake Pads, Rotors and Calipers
	Lubricate Caliper Slide Rails
	Inspect Rear Brake Pads, Rotors and Calipers
	Inspect/Repack Rear Wheel Bearings
	Inspect Shocks/Struts for Leakage
	Inspect Tire Wear Pattern
	Rotate Tires and Adjust Air Pressure (Including Spare)
	Replace
	Engine Oil
	Oil Filter
	Air Filter Element
	Spark Plugs
	PCV Filter
	Drain, Flush and Refill Engine Coolant

SCHEDULED SERVICES
Article Text (p. 22)

Copyright © 1998 Mitchell Repair Information Company, LLC
Sunday, August 26, 2001 06:14PM

Manual Transmission Oil	
Rear Axle Oil	

Lubrication Specifications

Application	Specification
Engine Oil	
Minimum Temperature	
Greater Than 0øF (-18øC)	SAE 10W-30 API SG/CD
Maximum Temperature	
Less Than 0øF (-18øC)	SAE 5W-30 API SG/CD
Manual Transmission	SAE 75W-90 GL-5
Rear Axle	SAE 80W-90 GL-5

Fluid Capacities

Application	Quantity
Automatic Transmission Fluid	7.7-7.9 Qts. (7.3-7.5L)
Cooling System	
1983-85	9.0-10.0 Qts. (8.5-9.5L)
1986-91	
Turbo	9.2 Qts. (8.7L)
Non-Turbo	7.7 Qts. (7.3L)
Engine Oil	4.4-4.7 Qts. (4.2-4.4L)
Manual Transmission Oil	2.1-2.6 Qts. (2.0-2.5L)
Rear Axle Oil	
Turbo	1.3-1.5 Qts. (1.2-1.4L)
Non-Turbo	1.4-1.7 Qts. (1.3-1.6L)

Service Labor Times

Application	Hours
Automatic Transmission	3.7
Manual Transmission	4.1

67,500 MILE (108,000 KM) SERVICE

67,500 MILE (108,000 KM) SERVICE

Service Or Inspect	
Verify Last Major Service Was Performed	
Check Fluid Levels and Fluid Condition	
Inspect Coolant Level, Hoses and Clamps	

SCHEDULED SERVICES
Article Text (p. 23)

Copyright © 1998 Mitchell Repair Information Company, LLC
Sunday, August 26, 2001 06:14PM

	Inspect Exhaust System
	Inspect C/V Joint Boots
	Inspect Brake Linings
	Lubricate Chassis
	Replace
	Engine Oil
	Oil Filter
	Lubrication Specifications

Application	Specification
Engine Oil	
Minimum Temperature	
Greater Than 0øF (-18øC)	SAE 10W-30 API SG/CD
Maximum Temperature	
Less Than 0øF (-18øC)	SAE 5W-30 API SG/CD

	Fluid Capacities

Application	Quantity
Engine Oil	4.4-4.7 Qts. (4.2-4.4L)

75,000 MILE (120,000 KM) SERVICE

75,000 MILE (120,000 KM) SERVICE

	Service Or Inspect
	Verify Last Major Service Was Performed
	Idle Speed
	Check Fluid Levels and Fluid Condition
	Inspect Coolant Level, Hoses and Clamps
	Check Coolant Strength
	Check Exhaust System & Heat Shielding
	Check C/V Joint Boots

SCHEDULED SERVICES
Article Text (p. 24)

Copyright © 1998 Mitchell Repair Information Company, LLC
Sunday, August 26, 2001 06:14PM

³	Clean Battery and Battery Terminals ³
³	Inspect/Adjust Accessory Drive Belts (Replace if Required) ³
³	Inspect Fuel/Tank/Cap/Lines ³
³	Check Operation of Horn, Wipers/Washers & All Exterior Lights ³
³	Inspect Condition of Wiper Blades ³
³	Check Headlight Alignment ³
³	Check Body Drain Holes ³
³	Check Seat Belt Webbing and Release Mechanisms ³
³	Check Parking Brake Operation ³
³	Check Shift Interlock Operation ³
³	Lubricate Weatherstripping with Silicone ³
³	Lubricate Door Hinges ³
³	Lubricate Door Locks ³
³	Check Steering Rack Boots ³
³	Inspect Steering Linkage/Front Suspension ³
³	Lubricate Steering Linkage & Suspension ³
³	Lubricate Chassis ³
³	Inspect Brake System Hoses & Lines ³
³	Inspect Front Brake Pads, Rotors and Calipers ³
³	Lubricate Caliper Slide Rails ³
³	Inspect Rear Brake Pads, Rotors and Calipers ³
³	Inspect Shocks/Struts for Leakage ³
³	Inspect Tire Wear Pattern ³
³	Rotate Tires and Adjust Air Pressure (Including Spare) ³
³	Replace ³
³	Engine Oil ³

Copyright © 1998 Mitchell Repair Information Company, LLC
Sunday, August 26, 2001 06:14PM

	Oil Filter

Lubrication Specifications	
Application	Specification
Engine Oil	
Minimum Temperature	
Greater Than 0øF (-18øC)	SAE 10W-30 API SG/CD
Maximum Temperature	
Less Than 0øF (-18øC)	SAE 5W-30 API SG/CD

Fluid Capacities	
Application	Quantity
Cooling System	
1983-85	9.0-10.0 Qts. (8.5-9.5L)
1986-91	
Turbo	9.2 Qts. (8.7L)
Non-Turbo	7.7 Qts. (7.3L)
Engine Oil	4.4-4.7 Qts. (4.2-4.4L)

82,500 MILE (132,000 KM) SERVICE

82,500 MILE (132,000 KM) SERVICE

Service Or Inspect
Verify Last Major Service Was Performed
Check Fluid Levels and Fluid Condition
Inspect Coolant Level, Hoses and Clamps
Inspect Exhaust System
Inspect C/V Joint Boots
Inspect Brake Linings
Lubricate Chassis
Replace
Engine Oil
Oil Filter

Lubrication Specifications

SCHEDULED SERVICES
Article Text (p. 26)

Copyright © 1998 Mitchell Repair Information Company, LLC
Sunday, August 26, 2001 06:14PM

Application	Specification
Engine Oil	
Minimum Temperature	
Greater Than 0øF (-18øC)	SAE 10W-30 API SG/CD
Maximum Temperature	
Less Than 0øF (-18øC)	SAE 5W-30 API SG/CD

Application	Quantity
Engine Oil	4.4-4.7 Qts. (4.2-4.4L)

90,000 MILE (144,000 KM) SERVICE

90,000 MILE (144,000 KM) SERVICE

Service Or Inspect
Verify Last Major Service Was Performed
Check Fluid Levels and Fluid Condition
Inspect Coolant Level, Hoses and Clamps
Engine Coolant Level Warning System
Check Exhaust System & Heat Shielding
Clean Battery and Battery Terminals
Inspect/Adjust Accessory Drive Belts (Replace if Required)
Inspect Underhood Wiring Harnesses and Connections
Inspect Emission Control Vacuum Hoses and Connections
Inspect Thermostatic Air Cleaner (If Equipped)
Inspect Distributor Cap & Rotor (If Equipped)
Inspect Spark Plug Wires
Inspect PCV Valve and Hoses
Inspect EGR Valve and Hoses
Check Ignition Timing
Idle Speed

SCHEDULED SERVICES
Article Text (p. 27)

Copyright © 1998 Mitchell Repair Information Company, LLC
Sunday, August 26, 2001 06:14PM

	Inspect Fuel/Tank/Cap/Lines
	Check Operation of Horn, Wipers/Washers & All Exterior Lights
	Inspect Condition of Wiper Blades
	Check Headlight Alignment
	Check Body Drain Holes
	Check Seat Belt Webbing and Release Mechanisms
	Check Parking Brake Operation
	Check Shift Interlock Operation
	Lubricate Weatherstripping with Silicone
	Lubricate Door Hinges
	Lubricate Door Locks
	Check Steering Rack Boots
	Check C/V Joint Boots
	Inspect Steering Linkage/Front Suspension
	Lubricate Steering Linkage & Suspension
	Lubricate Chassis
	Suspension Bushings, Springs, Arms & Rear Jounce Bumpers
	Toe Control Hub & Control Link
	Lubricate Front Wheel Bearings
	Inspect Brake System Hoses & Lines
	Inspect Front Brake Pads, Rotors and Calipers
	Lubricate Caliper Slide Rails
	Inspect Rear Brake Pads, Rotors and Calipers
	Inspect/Repack Rear Wheel Bearings
	Inspect Shocks/Struts for Leakage
	Inspect Tire Wear Pattern

Copyright © 1998 Mitchell Repair Information Company, LLC
Sunday, August 26, 2001 06:14PM

Rotate Tires and Adjust Air Pressure (Including Spare)	
Replace	
Engine Oil	
Oil Filter	
Air Filter Element	
Spark Plugs	
PCV Filter	
Drain, Flush and Refill Engine Coolant	
Manual Transmission Oil	
Rear Axle Oil	

Lubrication Specifications

Application	Specification
Engine Oil	
Minimum Temperature	
Greater Than 0øF (-18øC)	SAE 10W-30 API SG/CD
Maximum Temperature	
Less Than 0øF (-18øC)	SAE 5W-30 API SG/CD
Manual Transmission	SAE 75W-90 GL-5
Rear Axle	SAE 80W-90 GL-5

Fluid Capacities

Application	Quantity
Automatic Transmission Fluid	7.7-7.9 Qts. (7.3-7.5L)
Cooling System	
1983-85	9.0-10.0 Qts. (8.5-9.5L)
1986-91	
Turbo	9.2 Qts. (8.7L)
Non-Turbo	7.7 Qts. (7.3L)
Engine Oil	4.4-4.7 Qts. (4.2-4.4L)
Manual Transmission Oil	2.1-2.6 Qts. (2.0-2.5L)
Rear Axle Oil	
Turbo	1.3-1.5 Qts. (1.2-1.4L)
Non-Turbo	1.4-1.7 Qts. (1.3-1.6L)

Service Labor Times

Application	Hours

SCHEDULED SERVICES
Article Text (p. 29)

Copyright © 1998 Mitchell Repair Information Company, LLC
Sunday, August 26, 2001 06:14PM

Automatic Transmission	2.1
Manual Transmission	2.1

97,500 MILE (156,000 KM) SERVICE

97,500 MILE (156,000 KM) SERVICE

Service Or Inspect
Verify Last Major Service Was Performed
Check Fluid Levels and Fluid Condition
Inspect Coolant Level, Hoses and Clamps
Inspect Exhaust System
Inspect C/V Joint Boots
Inspect Brake Linings
Lubricate Chassis
Replace
Engine Oil
Oil Filter

Lubrication Specifications	
Application	Specification
Engine Oil	
Minimum Temperature	
Greater Than 0øF (-18øC)	SAE 10W-30 API SG/CD
Maximum Temperature	
Less Than 0øF (-18øC)	SAE 5W-30 API SG/CD

Fluid Capacities	
Application	Quantity
Engine Oil	4.4-4.7 Qts. (4.2-4.4L)

105,000 MILE (168,000 KM) SERVICE

105,000 MILE (168,000 KM) SERVICE

SCHEDULED SERVICES
Article Text (p. 30)

Copyright © 1998 Mitchell Repair Information Company, LLC
Sunday, August 26, 2001 06:14PM

Service Or Inspect
Verify Last Major Service Was Performed
Idle Speed
Check Fluid Levels and Fluid Condition
Inspect Coolant Level, Hoses and Clamps
Check Coolant Strength
Check Exhaust System & Heat Shielding
Check C/V Joint Boots
Clean Battery and Battery Terminals
Inspect/Adjust Accessory Drive Belts (Replace if Required)
Inspect Fuel/Tank/Cap/Lines
Check Operation of Horn, Wipers/Washers & All Exterior Lights
Inspect Condition of Wiper Blades
Check Headlight Alignment
Check Body Drain Holes
Check Seat Belt Webbing and Release Mechanisms
Check Parking Brake Operation
Check Shift Interlock Operation
Lubricate Weatherstripping with Silicone
Lubricate Door Hinges
Lubricate Door Locks
Check Steering Rack Boots
Inspect Steering Linkage/Front Suspension
Lubricate Steering Linkage & Suspension
Lubricate Chassis
Inspect Brake System Hoses & Lines

Copyright © 1998 Mitchell Repair Information Company, LLC
Sunday, August 26, 2001 06:14PM

³ ³ Inspect Front Brake Pads, Rotors and Calipers	³
³ ³ Lubricate Caliper Slide Rails	³
³ ³ Inspect Rear Brake Pads, Rotors and Calipers	³
³ ³ Inspect Shocks/Struts for Leakage	³
³ ³ Inspect Tire Wear Pattern	³
³ ³ Rotate Tires and Adjust Air Pressure (Including Spare)	³
³ Replace	³
³ ³ Engine Oil	³
³ ³ Oil Filter	³

³ Lubrication Specifications ³

Application	Specification
Engine Oil	
Minimum Temperature	
Greater Than 0øF (-18øC)	SAE 10W-30 API SG/CD
Maximum Temperature	
Less Than 0øF (-18øC)	SAE 5W-30 API SG/CD

³ Fluid Capacities ³

Application	Quantity
Cooling System	
1983-85	9.0-10.0 Qts. (8.5-9.5L)
1986-91	
Turbo	9.2 Qts. (8.7L)
Non-Turbo	7.7 Qts. (7.3L)
Engine Oil	4.4-4.7 Qts. (4.2-4.4L)

112,500 MILE (180,000 KM) SERVICE

112,500 MILE (180,000 KM) SERVICE

³ Service Or Inspect	³
³ ³ Verify Last Major Service Was Performed	³
³ ³ Check Fluid Levels and Fluid Condition	³
³ ³ Inspect Coolant Level, Hoses and Clamps	³

Copyright © 1998 Mitchell Repair Information Company, LLC
Sunday, August 26, 2001 06:14PM

	Inspect Exhaust System
	Inspect C/V Joint Boots
	Inspect Brake Linings
	Lubricate Chassis
	Replace
	Engine Oil
	Oil Filter

Lubrication Specifications

Application	Specification
Engine Oil	
Minimum Temperature	
Greater Than 0øF (-18øC)	SAE 10W-30 API SG/CD
Maximum Temperature	
Less Than 0øF (-18øC)	SAE 5W-30 API SG/CD

Fluid Capacities

Application	Quantity
Engine Oil	4.4-4.7 Qts. (4.2-4.4L)

120,000 MILE (192,000 KM) SERVICE

120,000 MILE (192,000 KM) SERVICE

	Service Or Inspect
	Verify Last Major Service Was Performed
	Check Fluid Levels and Fluid Condition
	Inspect Coolant Level, Hoses and Clamps
	Engine Coolant Level Warning System
	Check Exhaust System & Heat Shielding
	Clean Battery and Battery Terminals
	Inspect/Adjust Accessory Drive Belts (Replace if Required)
	Inspect Underhood Wiring Harnesses and Connections

SCHEDULED SERVICES
Article Text (p. 33)

Copyright © 1998 Mitchell Repair Information Company, LLC
Sunday, August 26, 2001 06:14PM

Inspect Emission Control Vacuum Hoses and Connections
Inspect Thermostatic Air Cleaner (If Equipped)
Inspect Distributor Cap & Rotor (If Equipped)
Inspect Spark Plug Wires
Inspect PCV Valve and Hoses
Inspect EGR Valve and Hoses
Check Ignition Timing
Idle Speed
Inspect Fuel/Tank/Cap/Lines
Check Operation of Horn, Wipers/Washers & All Exterior Lights
Inspect Condition of Wiper Blades
Check Headlight Alignment
Check Body Drain Holes
Check Seat Belt Webbing and Release Mechanisms
Check Parking Brake Operation
Check Shift Interlock Operation
Lubricate Weatherstripping with Silicone
Lubricate Door Hinges
Lubricate Door Locks
Check Steering Rack Boots
Check C/V Joint Boots
Inspect Steering Linkage/Front Suspension
Lubricate Steering Linkage & Suspension
Lubricate Chassis
Suspension Bushings, Springs, Arms & Rear Jounce Bumpers
Toe Control Hub & Control Link

SCHEDULED SERVICES
Article Text (p. 34)

Copyright © 1998 Mitchell Repair Information Company, LLC
Sunday, August 26, 2001 06:14PM

Lubricate Front Wheel Bearings	
Inspect Brake System Hoses & Lines	
Inspect Front Brake Pads, Rotors and Calipers	
Lubricate Caliper Slide Rails	
Inspect Rear Brake Pads, Rotors and Calipers	
Inspect/Repack Rear Wheel Bearings	
Inspect Shocks/Struts for Leakage	
Inspect Tire Wear Pattern	
Rotate Tires and Adjust Air Pressure (Including Spare)	
Replace	
Engine Oil	
Oil Filter	
Air Filter Element	
Spark Plugs	
PCV Filter	
Fuel Filter	
Drain, Flush and Refill Engine Coolant	
Manual Transmission Oil	
Rear Axle Oil	

Lubrication Specifications

Application	Specification
Engine Oil	
Minimum Temperature	
Greater Than 0øF (-18øC)	SAE 10W-30 API SG/CD
Maximum Temperature	
Less Than 0øF (-18øC)	SAE 5W-30 API SG/CD
Manual Transmission	SAE 75W-90 GL-5
Rear Axle	SAE 80W-90 GL-5

Fluid Capacities

SCHEDULED SERVICES
Article Text (p. 35)

Copyright © 1998 Mitchell Repair Information Company, LLC
Sunday, August 26, 2001 06:14PM

Application	Quantity
Automatic Transmission Fluid	7.7-7.9 Qts. (7.3-7.5L)
Cooling System	
1983-85	9.0-10.0 Qts. (8.5-9.5L)
1986-91	
Turbo	9.2 Qts. (8.7L)
Non-Turbo	7.7 Qts. (7.3L)
Engine Oil	4.4-4.7 Qts. (4.2-4.4L)
Manual Transmission Oil	2.1-2.6 Qts. (2.0-2.5L)
Rear Axle Oil	
Turbo	1.3-1.5 Qts. (1.2-1.4L)
Non-Turbo	1.4-1.7 Qts. (1.3-1.6L)

Service Labor Times

Application	Hours
Automatic Transmission	3.7
Manual Transmission	4.1

LUBRICATION SPECIFICATIONS

LUBRICATION SPECIFICATIONS TABLE

Application	Fluid Specifications
Brake Fluid	SAE J1703 or FMVSS116 DOT 3
Engine Oil	
Minimum Temperature	
Greater Than 0øF (-18øC)	SAE 10W-30 API/SF/SG
Maximum Temperature	
Less Than 0øF (-18øC)	SAE 5W-30 API/SF/SG
Manual Transmission	SAE 75W-90 GL-4, GL-5
Power Steering Fluid	Dexron-II ATF Or Equivalent
Rear Axle	SAE 80W-90 GL-5

FLUID CAPACITIES

FLUID CAPACITIES TABLE

Application	Quantity
A/C System R-12 Refrigerant Capacity	
1983-85	36 Ozs.
1986-89	
Nippondenso Compressor	22-25 Ozs.
Sanden Compressor	30 Ozs.
1990-91	26.5-28 Ozs.

Copyright © 1998 Mitchell Repair Information Company, LLC
Sunday, August 26, 2001 06:14PM

Automatic Transmission Fluid	7.7-7.9 Qts. (7.3-7.5L)
Cooling System	
1983-85	9.0-10.0 Qts. (8.5-9.5L)
1986-91	
Turbo	9.2 Qts. (8.7L)
Non-Turbo	7.7 Qts. (7.3L)
Engine Oil	4.4-4.7 Qts. (4.2-4.4L)
Fuel Tank	
1983-87	16.6 Gals. (63L)
1988-91	18.5 Gals. (70L)
Manual Transmission Oil	2.1-2.6 Qts. (2.0-2.5L)
Rear Axle Oil	
Turbo	1.3-1.5 Qts. (1.2-1.4L)
Non-Turbo	1.4-1.7 Qts. (1.3-1.6L)

END OF ARTICLE

SERVICE INDICATOR & WARNING LIGHTS
Article Text

Copyright © 1998 Mitchell Repair Information Company, LLC
Sunday, August 26, 2001 06:14PM

ARTICLE BEGINNING

1983-91 MAINTENANCE
Mazda Service Indicator & Warning Lights

RX7

SERVICE INDICATOR & WARNING LIGHTS

The warning lights will come on with the ignition. Any warning light which does not come with the ignition must be checked and repaired.

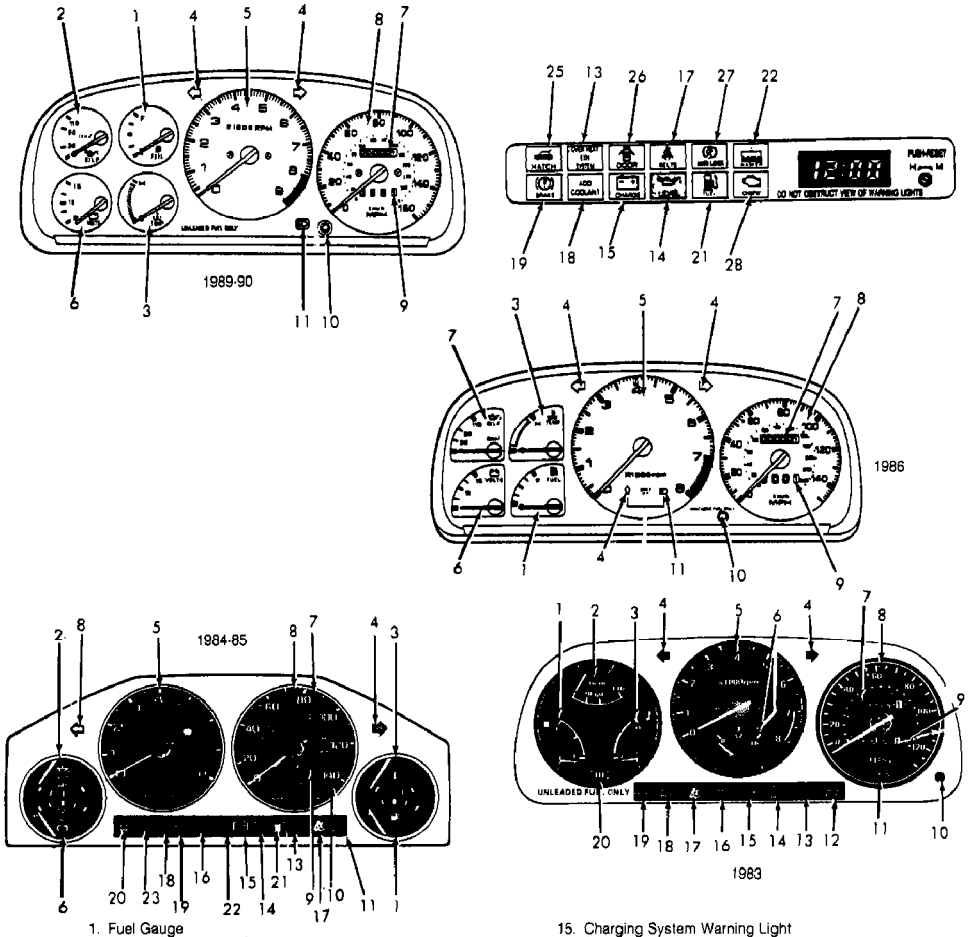

Fig. 1: Dash Gauges & Warning Lights
Courtesy of Mazda Motor of America Inc.

SERVICE INDICATOR & WARNING LIGHTS
Article Text (p. 2)

Copyright © 1998 Mitchell Repair Information Company, LLC
Sunday, August 26, 2001 06:14PM

BRAKE SYSTEM WARNING LIGHT

Light comes on with parking brake. If light remains on, with parking brake off, fluid must be checked.

SEAT BELT WARNING

Light and beeper will go on for about 6 seconds, or until driver's belt is locked, when ignition is turned on.

CHARGE SYSTEM WARNING LIGHT

Warning indicates a malfunction of either the alternator or the electrical wiring system.

MALFUNCTION INDICATOR LIGHT

CHECK light indicates a fault in the electronic engine control system, sensors or emission components.

SUPPLEMENTAL DRIVER RESTRAINT SYSTEM WARNING LIGHT (IF EQUIPPED)

AIR BAG light indicates a system malfunction by flashing or continuous illumination.

HEADLIGHT HIGH BEAM INDICATOR

Indicates headlight high beam is on.

HEADLIGHT RETRACTOR INDICATOR

Comes on while headlights are retracting or extending. If indicator remains on check and repair headlight retractor.

HAZARD WARNING LIGHT

Flashes with hazard warning lights.

KEY REMINDER WARNING

A beep sounds if the key is left in the ignition and the door is opened.

END OF ARTICLE

TRANSMISSION REMOVAL & INSTALLATION - M/T
Article Text

Copyright © 1998 Mitchell Repair Information Company, LLC
Sunday, August 26, 2001 06:31PM

ARTICLE BEGINNING

Manual Transmission Removal

1983 RX7

REMOVAL & INSTALLATION

Removal

1) Disconnect negative battery cable. Place gearshift lever in neutral position, and remove gearshift knob. Remove console box (if equipped) and gearshift lever.

2) On RX7, remove air cleaner and upper transmission-to-engine bolts. Raise and support vehicle and drain transmission. Disconnect and remove drive shaft. Disconnect and/or remove under cover, exhaust components and emission control components as required.

3) Remove clutch slave cylinder and place out of the way without removing hydraulic line. Disconnect and remove starter, speedometer cable, back-up light wires and other electrical connections.

4) Place jack under rear of engine, protecting oil pan with wooden block. Position transmission jack under transmission and remove transmission-to-engine mounting bolts. If equipped, remove transmission-to-crossmember bolts, crossmember-to-frame bolts and crossmember. Slide transmission back until input shaft is cleared. Remove from vehicle.

Installation

To install, reverse removal procedure, ensuring that splines in input shaft align with those in clutch disc.

END OF ARTICLE

TRANSMISSION SERVICING - M/T
Article Text

Copyright © 1998 Mitchell Repair Information Company, LLC
Sunday, August 26, 2001 06:31PM

ARTICLE BEGINNING

Manual Transmission Servicing

1983 B2000 & B2200 Pickups, GLC, GLC Wagon, RX7 & 626

LUBRICATION

SERVICE INTERVALS

Replace lubricant every 30,000 miles and check lubricant level every 7,500 miles.

FLUID LEVEL

GLC & 626
Remove speedometer cable and driven gear from transaxle case. Use "L" and "F" marks on speedometer gear housing to check lubricant level. If necessary, add oil through this opening.

All Others
Check lubricant level at fill hole. Lubricant level should be to bottom of fill hole.

FLUID TYPE

Hypoid SAE 80W/90 (API GL-4 or GL-5)

FLUID CAPACITY

Application	Capacity
B2000 & B2200	
4-Speed	1.6 qts. (1.5L)
5-Speed	1.8 qts. (1.7L)
GLC	3.4 qts. (3.2L)
GLC Wagon	
4-Speed	1.4 qts. (1.3L)
5-Speed	1.8 qts. (1.7L)
RX7	2.1 qts. (2.0L)
626	3.6 qts. (3.4L)

ADJUSTMENT

LINKAGE

No external linkage adjustment is required.

END OF ARTICLE

CLUTCH
Article Text

Copyright © 1998 Mitchell Repair Information Company, LLC
Sunday, August 26, 2001 06:33PM

ARTICLE BEGINNING

1983 Clutch

Mazda - RWD GLC Wagon, RX-7, B2000 Pickup, B2200 Pickup

DESCRIPTION

The clutch assembly for all models is a single plate, dry disc, diaphragm spring type. The clutch release system used on the RX7 and B2000 and B2200 Pickups is hydraulic, using a firewall-mounted master cylinder and a slave cylinder attached to the clutch housing.

The GLC Wagon clutch assembly has a mechanical release system consisting of clutch pedal, cable, release lever and release bearing. On all models, release bearing is prelubricated and sealed.

REMOVAL & INSTALLATION

CLUTCH ASSEMBLY

Removal

1) Disconnect negative battery cable. Place shift lever in Neutral. Remove shift knob. Remove console box (if equipped). Remove shift lever dust boot, lever and related components. On RX7, remove air cleaner. On GLC Wagon, remove 2 upper clutch housing mount bolts.

2) On all models, raise and support vehicle. Drain transmission. Remove drive shaft. Remove under covers. Remove any interfering exhaust components. On all except GLC Wagon, remove clutch slave cylinder and set aside without removing fluid line.

3) On all models, remove starter, speedometer cable and related electrical connections. Place jack under rear end of engine. Protect oil pan with wood block. Position jack under transmission. Remove transmission-to-engine mount bolts.

4) If equipped, remove transmission-to-crossmember bolts, crossmember-to-frame bolts and crossmember. Slide transmission back until input shaft is cleared and remove from vehicle.

5) Install flywheel holding tool (49 0118 271A for GLC Wagon and B2000 Pickup, 49 E301 060 for B2200 Pickup and 49 1881 060 for RX7). Index mark pressure plate-to-flywheel.

6) Install clutch assembly alignment tool (49 SE01 310 for all models). Loosen pressure plate mounting bolts evenly, in a diagonal pattern. Separate clutch disc and pressure plate. Remove release bearing and fork. See Fig. 1.

Copyright © 1998 Mitchell Repair Information Company, LLC
Sunday, August 26, 2001 06:33PM

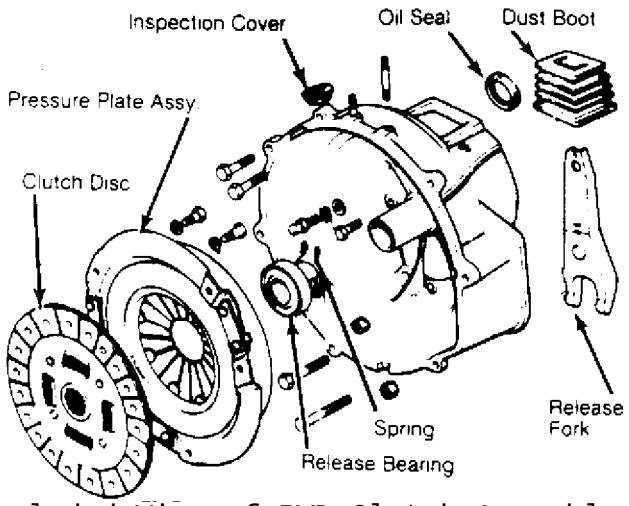

Fig. 1: Exploded View of RWD Clutch Assembly

Check clutch disc and flywheel for excessive wear, cracks or damage and release bearing for noise or roughness.

Inspection

1) Check disc for loose rivets, worn springs or oil contamination. Minimum lining height above rivet heads is .012" (.30 mm). On RX7, minimum disc free thickness is .276" (7 mm).

2) Inspect flywheel and pressure plate friction surfaces for burns, scoring or grooves. Friction surface warpage limit is .002" (.05 mm). Resurface or replace flywheel and/or pressure plate as necessary. If flywheel ring gear is replaced, ensure chamfer on teeth faces engine.

3) On RX7, inspect pressure plate diaphragm spring fingers for excessive wear or out of alignment. Maximum out of alignment limit is .039" (1 mm). Finger groove wear limit is .039" (1 mm).

4) Mount clutch disc on input shaft. Check runout using dial indicator. Maximum runout is .039" (1 mm). Check disc hub and input shaft splines for excessive wear. Hub must slide smoothly on input shaft splines.

Installation

1) Lightly coat input shaft splines and release bearing contact areas with molybdenum grease. Use clutch alignment tool to center clutch assembly. Clutch cover and flywheel "O" alignment marks must be aligned at installation.

2) Tighten pressure plate bolts evenly, in diagonal pattern. To complete installation, reverse removal procedure.

RELEASE BEARING & FORK

Removal & Installation

1) With clutch assembly removed, detach release bearing and fork. On GLC Wagon, loosen and remove bolt attaching release shaft to transmission. Slide bearing off bearing cover. Remove shaft from clutch housing.

2) On all models, check release bearing by turning by hand

Copyright © 1998 Mitchell Repair Information Company, LLC
Sunday, August 26, 2001 06:33PM

in thrust direction. Replace if bearing feels rough or noisy. Inspect release fork for cracks or bends. Replace if necessary.

3) Lightly apply molybdenum grease to clutch component contact areas and sliding surfaces. To complete installation, reverse removal procedures.

CLUTCH MASTER CYLINDER

Removal & Installation (Except GLC Wagon)

Disconnect hydraulic line and mount nuts from master cylinder. Unhook clutch pedal from push rod. Remove cylinder. To install, reverse removal procedure and bleed hydraulic system.

CLUTCH SLAVE CYLINDER

Removal & Installation (Except GLC Wagon)

Raise and support vehicle. Disconnect fluid hose and plug. Remove slave cylinder-to-clutch housing mount nuts. Detach cylinder. To install, reverse removal procedure and bleed hydraulic system.

CLUTCH CABLE

Removal & Installation (GLC Wagon)

1) Loosen clutch release cable lock nuts at stop ring on engine side of firewall. Pull inner cable toward clutch pedal. Disconnect inner cable from pedal assembly.

2) Pull and remove cable through stop ring from engine side of firewall. Disconnect inner cable at release lever. Remove retaining clip, pull outer cable and remove from clutch housing bracket. See Fig. 2.

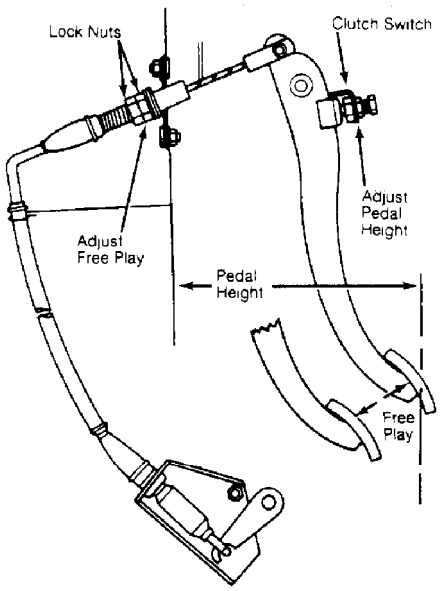

Fig. 2: GLC Wagon Clutch Cable Assembly

After installation, adjust the clutch cable to specification.

Copyright © 1998 Mitchell Repair Information Company, LLC
Sunday, August 26, 2001 06:33PM

3) Inspect for damage to stop ring, cable ends and inner and outer cable. Check cable function. Before installing, apply molybdenum grease to bushings, pedal hook and roller. To complete installation, reverse removal procedure. Adjust cable for proper pedal free play.

PILOT BEARING

Removal & Installation (RX7)

With clutch components removed, check pilot bearing for roughness, looseness and any damage. If necessary, remove bearing and oil seal with puller tool (49 1285 071). To install new bearing, use installer tool (49 0823 072A). Apply multipurpose grease to bearing and install oil seal.

Removal & Installation (All Other Models)

Pilot bearing is pressed into flywheel. To replace, install flywheel holding tool and remove flywheel. Using arbor press and driver, press old bearing out. Press new bearing in until it is flush with flywheel surface. Lubricate with multipurpose grease. Install flywheel and holder. Tighten mount bolts evenly, in a diagonal pattern.

FLYWHEEL

Removal & Installation (RX7)

1) With clutch assembly removed, lock flywheel in position using holding tool. Loosen and remove lock nut with box wrench (49 0820 035). Remove flywheel using puller tool (49 0823 300A). Turn tool handle and lightly tap puller head. Once lock nut is loose, do not drop flywheel.

2) Inspect rear oil seal for leakage and replace as necessary. Before installing flywheel, apply sealer to surface of lock nut that contacts flywheel and install. Tighten lock nut to specification. To complete install, reverse removal procedure.

OVERHAUL

CLUTCH MASTER CYLINDER

NOTE: Master cylinders used on B2000 & B2200 Pickup have a different external appearance, but procedures are the same.

Disassembly (Except GLC Wagon)

1) Remove reservoir cap assembly. Drain brake fluid. On RX7, remove reservoir connector bolt and reservoir. On B2000 & B2200 Pickups, remove hydraulic line adapter, washer, 1-way valve, spring and pin.

2) Remove piston stop ring, washer and piston assembly. Separate piston, cups and return spring. See Fig. 3. Clean parts in denatured alcohol or brake fluid. Blow dry with compressed air.

3) Check all parts for wear, damage or deformation. Standard piston-to-cylinder bore clearance is .001-.004" (.032-.102 mm). If

Copyright © 1998 Mitchell Repair Information Company, LLC
Sunday, August 26, 2001 06:33PM

clearance exceeds .006" (.15 mm), replace defective part. Coat all components with clean brake fluid before assembly.

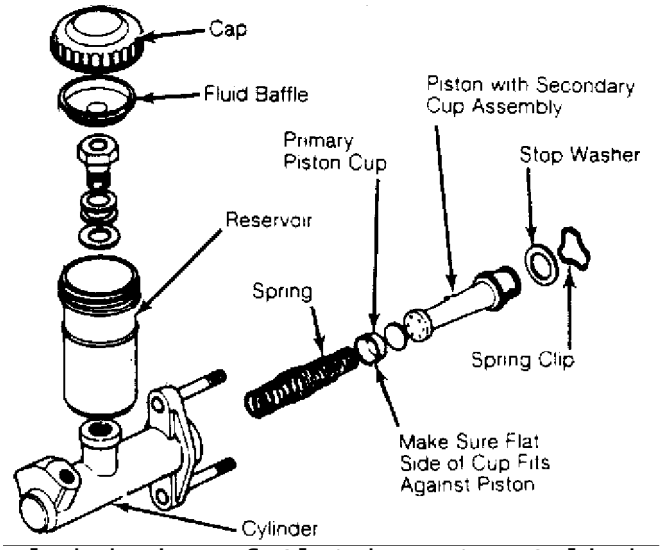

Fig. 3: Exploded View of Clutch Master Cylinder
B2000 & B2200 master cylinder external appearance is slightly different.

Reassembly

1) Install primary cup with flat side against piston. Ensure compensating port is open. To complete assembly, reverse disassembly procedure. After assembly, fill reservoir with clean brake fluid.

2) Bench bleed master cylinder by holding finger over outlet port and operating piston with screwdriver. Pump piston until air is ejected at outlet port and fluid pressure is felt. Install master cylinder and bleed hydraulic system.

CLUTCH SLAVE CYLINDER

Disassembly (Except GLC Wagon)

With slave cylinder removed, detach dust boot and release rod. Remove piston and cup assembly from cylinder, using compressed air if required. Remove spring, bleeder screw and valve. See Fig. 4.

Copyright © 1998 Mitchell Repair Information Company, LLC
Sunday, August 26, 2001 06:33PM

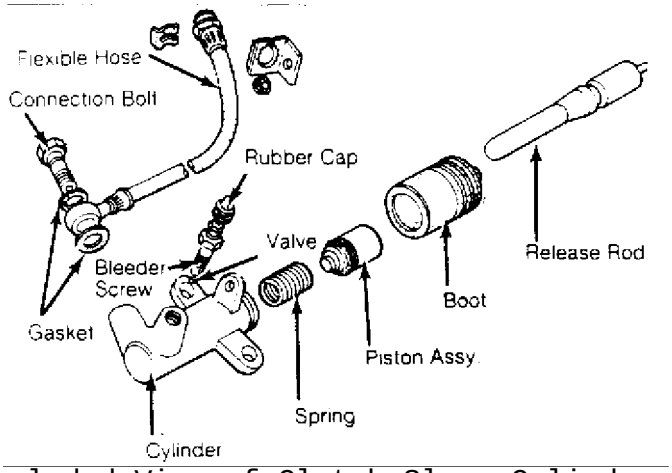

Fig. 4: Exploded View of Clutch Slave Cylinder

Inspect clutch hydraulic components for leakage and repair or replace as necessary.

Reassembly

1) Wash parts in clean brake fluid or denatured alcohol. Blow dry with compressed air. Check all parts for wear or damage. Standard piston-to-slave cylinder bore is .0016-.0049" (.040-.125 mm). If cylinder bore-to-piston clearance exceeds .006" (.15 mm), replace piston and/or cylinder.

2) Before assembly, coat pistons and cups with clean hydraulic fluid. To complete reassembly, reverse disassembly procedure.

ADJUSTMENTS

CLUTCH PEDAL HEIGHT

1) On RX7 and Pickup, measure distance from center of upper surface of pedal pad-to-dash insulator. To adjust height, loosen lock nut. Turn stopper bolt. Tighten lock nut after adjustment is made. See Fig. 5.

2) On GLC Wagon, loosen clutch switch lock nut. Rotate switch until correct height is obtained. Tighten lock nut. Standard pedal height is 7.48-7.68" (190-195 mm).

CLUTCH PEDAL FREE PLAY

1) On RX7 and Pickups, adjust clutch pedal free play, measured at pedal pad, to .02-.12" (0.6-3.0 mm). Loosen lock nut and turn pedal stopper bolt to specification. Tighten lock nut. See Fig. 5.

Copyright © 1998 Mitchell Repair Information Company, LLC
Sunday, August 26, 2001 06:33PM

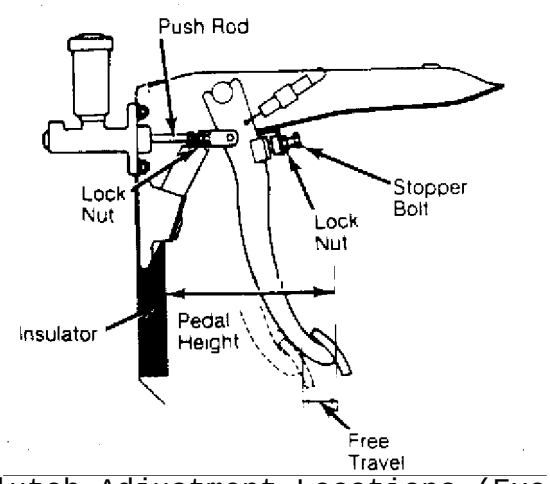

Fig. 5: Clutch Adjustment Locations (Except GLC Wagon)

Check clutch pedal for proper height and free play.

2) On GLC Wagon, clutch pedal free play is .39-.59" (10-15 mm). Adjust by setting release cable clearance at engine side of firewall. Loosen lock nut, pull outer cable and turn adjusting nut until clearance is .06-.09" (1.5-2.3 mm). Tighten lock nut. Check pedal free play. See Fig. 2.

CLUTCH PEDAL HEIGHT SPECIFICATIONS

Application	In. (mm)
GLC Wagon	7.48-7.68 (190-195)
RX7	7.5-7.7 (190-195)
B2000	8.1-8.3 (205-210)
B2200	8.5-8.7 (215-220)

TORQUE SPECIFICATIONS

TORQUE SPECIFICATIONS TABLE

Application	Ft. Lbs. (N.m)
Flywheel-to-Crankshaft	
B2000	112-118 (155-163)
B2200	95-137 (131-190)
GLC Wagon	60-65 (83-90)
Flywheel-to-Eccentric Shaft	
RX7 Rotary Engine	289-362 (393-492)
Pressure Plate-to-Flywheel	13-20 (18-27)

END OF ARTICLE

DRIVE AXLE
Article Text

Copyright © 1998 Mitchell Repair Information Company, LLC
Sunday, August 26, 2001 06:34PM

ARTICLE BEGINNING

1983 Drive Axles
MAZDA

GLC Wagon, RX7,
B2000 Pickup, B2200 Diesel Pickup

DESCRIPTION

Axle housing is banjo type with removable differential carrier and semi-floating drive axles. Ring and pinion are hypoid type, in which centerline of pinion is set below centerline of ring gear.

Differential case may be either 2 pinion or 4 pinion design. The drive axles are retained in housing by ball bearings and bearing retainers at axle housing outer ends. A clutch pack limited slip unit is available on RX7 models.

AXLE RATIO & IDENTIFICATION

All Mazda models use one basic type of rear axle assembly. Any differences in Removal & Installation or Overhaul procedures will be noted where they occur.

Axle ratio on GLC Wagon (automatic), B2200 Pickup and RX7 is 3.909:1. B2000 Pickup is 3.307:1 and GLC Wagon (manual) is 3.727:1. To determine axle ratio, divide number of ring gear teeth by number of pinion teeth.

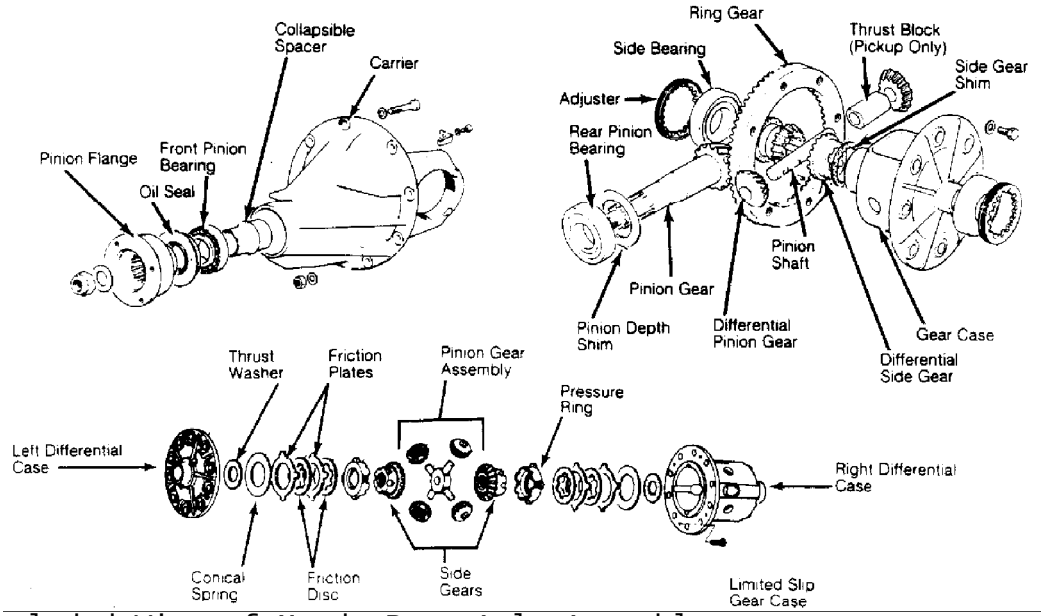

Fig. 1: Exploded View of Mazda Rear Axle Assembly

REMOVAL & INSTALLATION

Copyright © 1998 Mitchell Repair Information Company, LLC
Sunday, August 26, 2001 06:34PM

AXLE SHAFTS & BEARINGS

Removal

1) Raise and support vehicle. Remove wheel. Remove brake drum and brake shoes. Disconnect and plug hydraulic line from wheel cylinder. Disconnect parking brake cable.

2) From inboard side of backing plate, remove 4 nuts from axle housing through bolts. Pull drive axle, backing plate, bearing housing (Pickups) and shims (if equipped) from axle housing with drive axle puller (49 0223 630B). Remove oil seal from axle housing.

3) On Pickup models, flatten locking tabs of lock washer. Loosen lock nut with spanner wrench. Remove lock nut and washer.

4) Using bearing pullers (49 8531 746 & 49 0259 747), remove bearing and housing assembly from drive axle. Remove backing plate. Remove bearing and oil seal from housing.

Installation

1) Install backing plate and spacer on shaft with chamfered edge of spacer must face drive axle flange. Using bearing attachment, (49 0259 748) press bearing onto shaft until seated. Press new bearing collar onto shaft without any lubricant.

CAUTION: Do not press bearing and collar onto shaft at the same time. If bearing collar is installed with less than 2.7 tons pressure (2,451 kg), replace bearing collar.

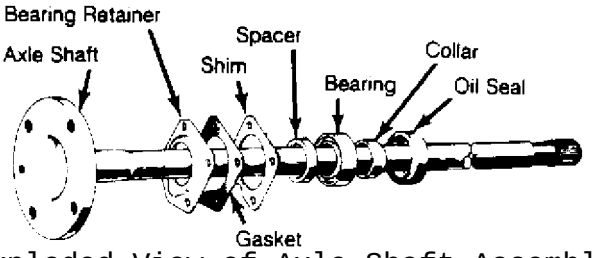

Fig. 2: Exploded View of Axle Shaft Assembly for All Models Except Pickups
Chamfered edge of spacer must face drive axle flange.

2) Apply a light coat of grease to oil seal and install oil seal in housing. Temporarily mount drive axle and backing plate on axle housing with mounting nuts.

3) Install dial indicator on backing plate and check drive axle end play. End play should be .002-.006" (.05-.15 mm) on Pickups and 0-.004" (0-.1 mm) on all other models.

4) On Pickup models only, if both drive axles were removed, the end play of each shaft must be measured separately. The end play for first drive axle installed should be .026-.033" (.65-.85 mm).

5) The end play for the second drive axle installed should be set to normal end play clearance of .002-.006" (.05-.15 mm).

6) After installing correct shim pack, install and tighten all attaching bolts and nuts. Install brake shoes and drum. Connect hydraulic lines to wheel cylinders, adjust brakes and bleed hydraulic

Copyright © 1998 Mitchell Repair Information Company, LLC
Sunday, August 26, 2001 06:34PM

system.

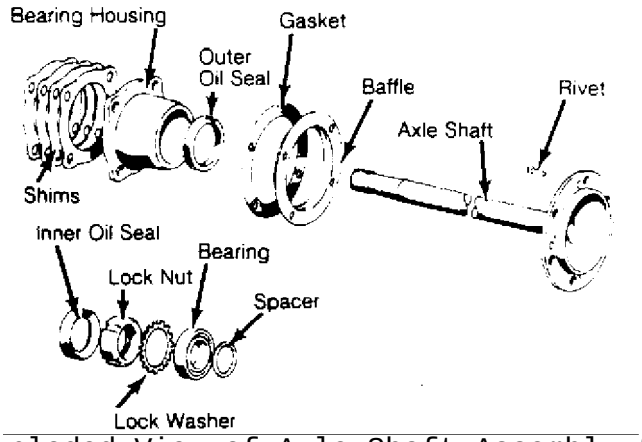

Fig. 3: Exploded View of Axle Shaft Assembly for Pickups

If both drive axles were removed, the end play of each shaft must be measured separately.

DIFFERENTIAL CARRIER

Removal

1) Raise and support vehicle with jack stands. Remove drain plug and drain rear axle lubricant. Remove drive axles.

2) Mark drive shaft and pinion flange for reassembly reference. Disconnect drive shaft. Remove carrier attaching nuts and withdraw carrier from axle housing.

Installation

To install, reverse removal procedure. Make sure to refill axle with lubricant.

OVERHAUL

DISASSEMBLY

1) Mount carrier in a repair stand. Punch identification marks on side bearing supports of carrier, differential bearing caps and side bearing adjusters. Remove adjuster lock plates, loosen bearing cap attaching nuts or bolts, and slightly back off adjusters to relieve preload.

2) Remove bearing caps and adjusters, then withdraw differential assembly from carrier, making sure side bearing races remain with their respective bearings.

3) Using puller, (49 0839 425C) remove side bearings from gear case. Straighten lock tabs, remove ring gear attaching bolts, and separate ring gear from gear case.

4) On limited slip differentials, gradually loosen attaching screws until distance between left and right half of differential case is about 0.12" (3 mm). Then carefully separate differential halves. Remove following parts: Thrust washer, conical spring,

Copyright © 1998 Mitchell Repair Information Company, LLC
Sunday, August 26, 2001 06:34PM

friction plate, friction disc, pressure ring, side gear, pinion gear and spider. Keep parts in order for reassembly. See Fig. 1.

5) On conventional differentials, drive out differential pinion shaft lock pin with a punch and remove pinion shaft. Rotate pinion gears 90ø and remove gears, thrust washer, thrust block (if equipped) and differential side gears.

6) Remove pinion nut and pinion flange. Remove drive pinion and rear bearing assembly, adjusting shims (if equipped), spacer and bearing collar (if used). Remove front oil seal and withdraw front pinion bearing.

7) Using a press, remove rear bearing from drive pinion, then lift off pinion adjusting shim. If necessary for replacement, use a drift punch and remove pinion bearing races from carrier.

8) Inspect all parts for chipped or worn teeth, damaged bearing journals, cracks, flaking or any damage. Replace defective parts as necessary.

NOTE: It may be necessary to tap end of pinion with a soft hammer to remove from carrier.

REASSEMBLY & ADJUSTMENT

Case Assembly

1) Install a thrust washer on each differential side gear and install into case. Through openings in gear case, insert pinion gears exactly 180ø opposite each other. Rotate pinion gears 90ø so holes in gears line up with pinion shaft holes in gear case. Insert pinion shaft through case and pinion gears.

2) On limited slip differential, install parts in the following order: Thrust washer, conical spring, friction plate, friction disc, friction plate, friction disc and pressure ring. See Fig. 1.

3) Check backlash between side gears and pinion gears. Backlash should be less than .008" (.2 mm) on Pickups and less than .004" (.1 mm) on all other models. If not, install selective thrust washers to bring backlash within specifications.

NOTE: Always use same thickness thrust washer for both side gears.

4) If equipped with thrust block, remove pinion shaft, install thrust block and reinstall pinion shaft. On all models, install lock pin into case to secure pinion shaft. Using a punch, stake lock pin hole to prevent pin from working loose.

5) On all models, mount ring gear on case, then install and tighten ring gear attaching bolts. If removed, install differential side bearings.

Copyright © 1998 Mitchell Repair Information Company, LLC
Sunday, August 26, 2001 06:34PM

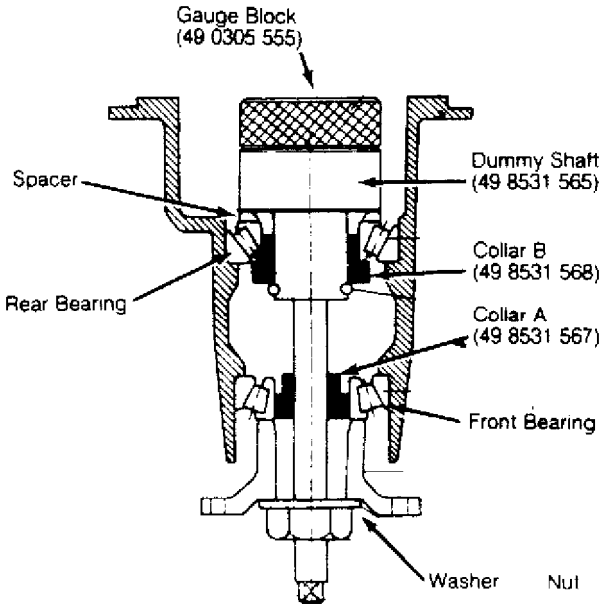

Fig. 4: Dummy Pinion Shaft and Gauge Block
Never use collapsible spacer when checking pinion depth.

Drive Pinion Depth

1) Make sure differential bearing bores are free of dirt and burrs. Install front and rear bearing races, then spacer and rear bearing. Install collar "B" (49 8531 568) on dummy drive pinion (49 8531 565) and secure them with "O" ring. See Fig. 4.

2) Install front bearing, collar "A" (49 8531 567), companion flange and washer. Tighten nut so that drive pinion turns freely.

3) Install dial indicator on gauge body (49 0727 570), place gauge body on a surface plate and preload indicator. When preloaded, turn outer ring of dial indicator to zero.

4) Place gauge block (49 0305 555) on pinion and position indicator assembly on block so button of indicator contacts lowest portion of differential bearing support bore.

NOTE: DO NOT install collapsible spacer.

Copyright © 1998 Mitchell Repair Information Company, LLC
Sunday, August 26, 2001 06:34PM

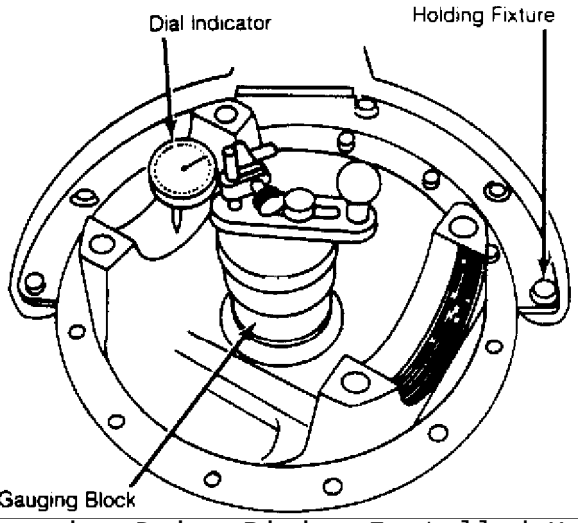

Fig. 5: Measuring Drive Pinion Installed Height
The use of a dial indicator, pinion gauge set and gauge block are required for this procedure.

5) Record the amount the indicator moves in a "+" (plus) or "-" (minus) direction from zero. Remove gauging assembly and pinion from carrier. Check rear face of pinion for the machining correction figure.

6) If pinion is marked "+" (plus), SUBTRACT amount specified on pinion from dial indicator reading; if marked "-" (minus), ADD amount to indicator reading.

NOTE: Figures on pinion are hundredth millimeters.

7) Select correct pinion depth adjusting shim to be used for reassembly by adding or subtracting the amount determined in steps 3) through 5) from the thickness of the original pinion depth shim used during gauging process. Position correct shim (from chart) on pinion and install pinion bearing.

PINION DEPTH ADJUSTING SHIMS

Identification Mark	Thickness In. (mm)
08	.121 (3.08)
11	.122 (3.11)
14	.124 (3.14)
17	.125 (3.17)
20	.126 (3.20)
23	.127 (3.23)
26	.128 (3.26)
29	.130 (3.29)
32	.131 (3.32)
35	.132 (3.35)
38	.133 (3.38)

Copyright © 1998 Mitchell Repair Information Company, LLC
Sunday, August 26, 2001 06:34PM

41 ..... .134 (3.41)
44 ..... .135 (3.44)
47 ..... .137 (3.47)

Pinion Bearing Preload

1) Install collapsible spacer onto drive pinion assembly and install in carrier. Place front bearing in position on pinion. Hold pinion fully forward and drive pinion bearing over pinion until seated.

2) Apply grease to pinion oil seal lip and install seal into carrier. Install flange on pinion by tapping with soft hammer. Install pinion washer and nut.

3) Before tightening nut (when pinion preload is zero), check oil seal drag using a torque wrench. Tighten pinion nut to initial torque specifications as shown in chart.

INITIAL PINION NUT TORQUE

Application	Ft. Lbs. (N.m)
GLC Wagon	87-130 (118-176)
Pickups	145-253 (197-343)
All Others	94-130 (127-176)

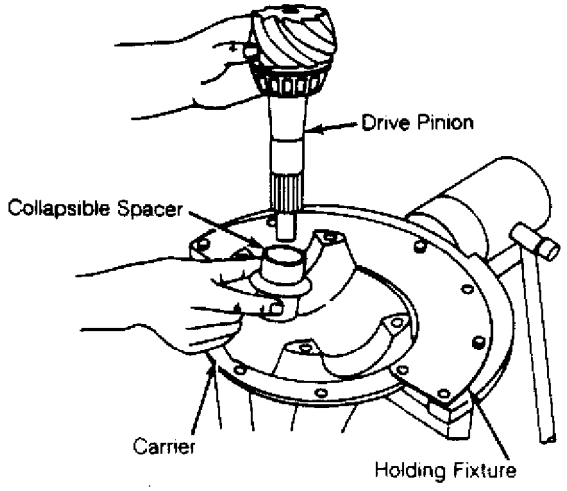

Fig. 6: Installing Drive Pinion Bearing Collapsible Spacer

If preload specifications are exceeded, collapsible spacer must be replaced.

4) With nut tightened to initial torque value, check preload using a torque wrench mounted on pinion nut. If preload is not as specified in specification table, continue tightening nut and checking preload until specified preload is obtained.

CAUTION: Preload builds quickly. Nuts should be tightened a little at a time and preload checked after each slight amount of

Copyright © 1998 Mitchell Repair Information Company, LLC
Sunday, August 26, 2001 06:34PM

tightening.

Backlash & Side Bearing Preload

1) Place differential case assembly into carrier making sure index marks on ring and pinion gears are aligned. See Fig. 7. Install bearing adjusters and bearing caps, then tighten bearing cap nuts or bolts finger tight.

2) Turn adjusters with a spanner wrench until bearing end play is eliminated and some backlash exists between ring gear and pinion. Slightly tighten one bearing cap nut or bolt on each side of carrier and measure backlash.

3) Mount a dial indicator to carrier flange so button of indicator contacts one of the ring gear teeth at a right angle. Check backlash between ring and pinion gears.

4) Using the spanner wrench, turn both bearing adjusters equally until backlash is as specified in Axle Assembly Specifications.

5) Differential bearing preload (case spread) is obtained by tightening both bearing adjusters equally. Tighten adjusters until distance between pilot sections of side bearing caps is 6.5133-6.5158" (165.437-165.50 mm) on GLC Wagon, 7.3004-7.3033" (185.43-185.50 mm) on RX7 or 8.485-8.0513" (204.428-204.50 mm) on Pickups.

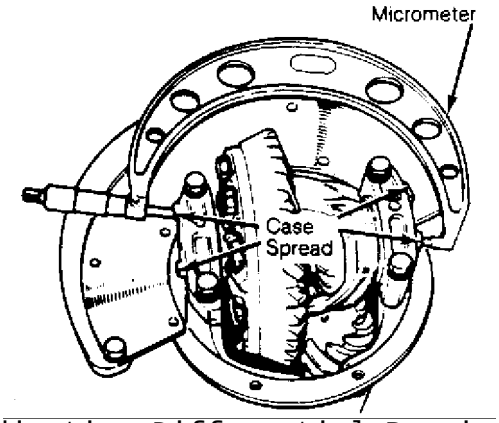

Fig. 7: Adjusting Differential Bearing Preload (Case Spread)

When adjusting side bearing preload, care must be taken not to affect the ring and pinion gear backlash.

AXLE ASSEMBLY SPECIFICATIONS

Application	INCH Lbs. (N.m)
Pinion Bearing Preload (1)	
GLC Wagon	2.6-6.1 (.29-.68)
Pickups	11.3-15.6 (1.27-1.76)
All Others	7.8-12.2 (.88-1.37)
Side Bearing Preload	
GLC Wagon	4-9 (.45-1.01)
Pickups	4-13 (.45-1.47)

Copyright © 1998 Mitchell Repair Information Company, LLC
Sunday, August 26, 2001 06:34PM

All Others	5-18 (.56-2.03)
	In. (mm)
Ring & Pinion Backlash	
GLC Wagon	.0059-.0067 (.15-.17)
Pickups	.0075-.0083 (.19-.21)
All Others	.0035-.0043 (.09-.11)
Side Gear & Pinion Backlash	
Pickups	0-.008 (0-0.2)
All Others	0-.004 (0-0.1)
	Qts. (L)
Oil Capacity	
GLC	.8 (.8)
Pickups	1.4 (1.3)
RX7	1.3 (1.2)

(1) - Without oil seal installed.

TORQUE SPECIFICATIONS

TORQUE SPECIFICATIONS TABLE

Application	Ft. Lbs. (N.m)
Pinion Nut	
GLC Wagon	87-130 (118-177)
Pickups	145-253 (197-344)
All Others	94-130 (128-177)
Ring Gear-to-Differential Case	
RX7	51-61 (69-83)
All Others	54-61 (72-83)
Differential Bearing Cap Bolts	
GLC Wagon	23-34 (31-46)
Pickups	41-59 (56-80)
All Others	27-38 (37-52)

END OF ARTICLE

STEERING COLUMN
Article Text

Copyright © 1998 Mitchell Repair Information Company, LLC
Sunday, August 26, 2001 08:20PM

ARTICLE BEGINNING

1983 STEERING
Mazda - Steering Columns

GLC Wagon, RX7

DESCRIPTION

Steering columns used on these models incorporate a collapsible steering shaft.

REMOVAL & INSTALLATION

STEERING COLUMN

Removal
1) Disconnect battery ground cable. Remove horn cap. Remove steering wheel with steering wheel puller. See Mazda in Steering Wheel & Column Switches article in this section. Remove steering column covers. Disconnect combination switch coupler and remove switch.

NOTE: Do not hammer or exert extreme pressure on steering column, as damage to collapsible section may result.

2) Remove lock assembly. Remove steering column mounting bolts. Remove steering column jacket.
3) Disconnect center link from pitman arm using puller (49-0118-850C). Remove pitman arm from sector shaft using puller (49-0223-695E).
4) Remove steering gear housing attaching bolts. Remove steering gear housing assembly through engine compartment. See Fig. 1.

Inspection
Check all components for damage or wear. Check steering shaft for bend or damage.

Installation
To install, reverse removal procedures. Make sure there is clearance between column cover and steering wheel.

STEERING COLUMN
Article Text (p. 2)

Copyright © 1998 Mitchell Repair Information Company, LLC
Sunday, August 26, 2001 08:20PM

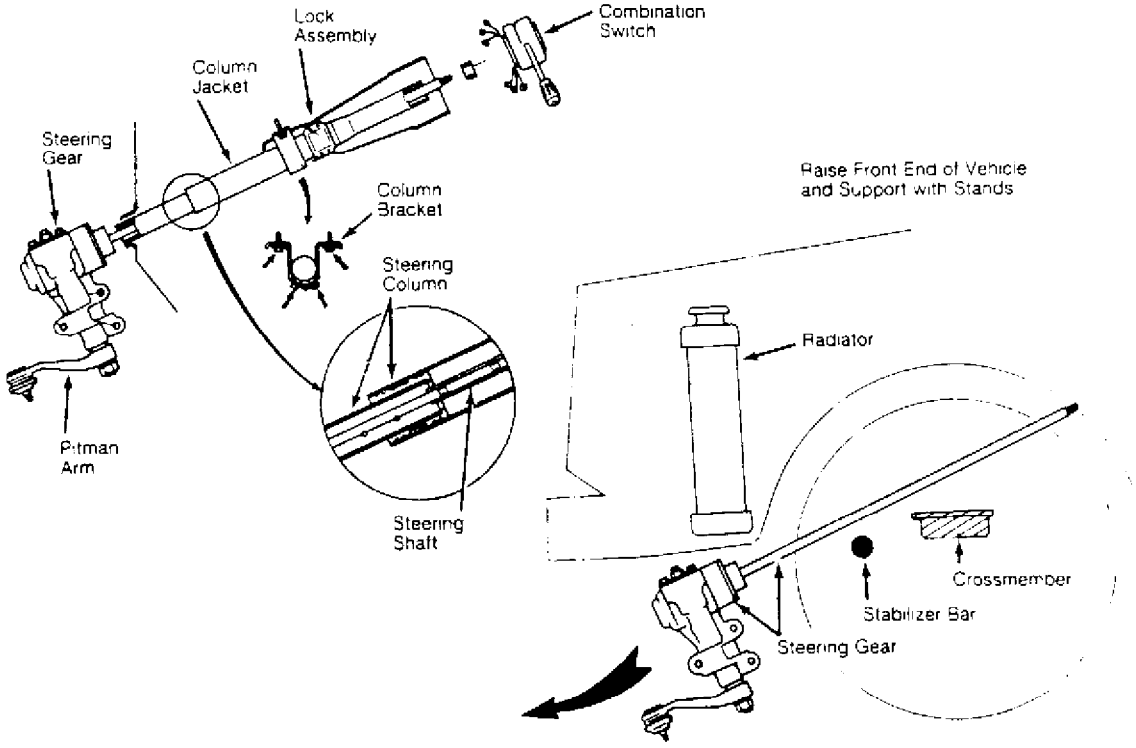

Fig. 1: GLC Wagon Steering Column
RX7 steering column is similar.

TORQUE SPECIFICATIONS

TORQUE SPECIFICATIONS TABLE

Application	Ft. Lbs. (N.m)
Column Bracket Bolts	12-17 (16-23)
Steering Wheel Nut	29-36 (40-50)
Steering Gear Housing to Frame	32-40 (44-55)
Pitman Arm to Sector Shaft	58-87 (80-120)
Pitman Arm to Center Link	22-33 (30-45)

END OF ARTICLE

STEERING COLUMN SWITCHES
Article Text

Copyright © 1998 Mitchell Repair Information Company, LLC
Sunday, August 26, 2001 08:20PM

ARTICLE BEGINNING

1983 STEERING
Mazda - Steering Wheel & Column Switches

626, GLC (FWD Sedan & RWD Wagon), Pickup, RX7

REMOVAL & INSTALLATION

STEERING WHEEL & COMBINATION SWITCH

Removal
1) Disconnect battery ground cable. Pull off horn cap. Place front wheels in straight-ahead position. Index mark column shaft and steering wheel.
2) Remove steering column shrouding. Disconnect electrical connectors. To disconnect electrical connections on RX7, remove air duct at base of steering column.
3) On all models, remove steering shaft stop ring, cancel cam and spring. Remove retaining screws and combination switch assembly.

NOTE: Wiper switch can be removed with combination switch or separated from it.

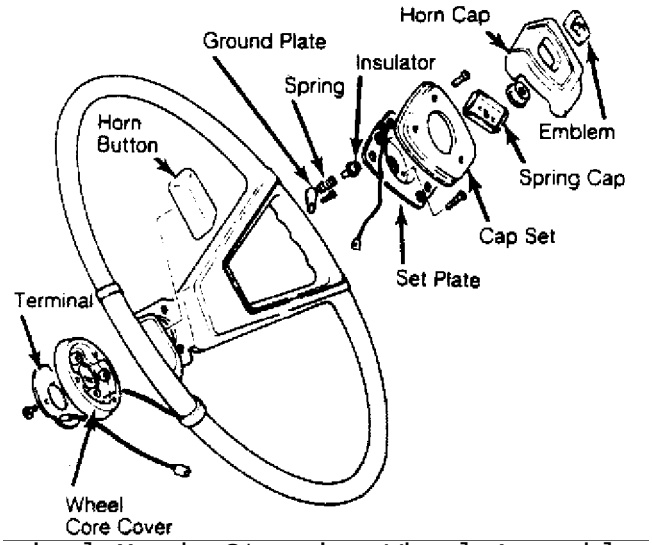

Fig. 1: Typical Mazda Steering Wheel Assembly

Installation
To install, reverse removal procedures.

IGNITION SWITCH

Removal
1) Remove steering wheel as previously outlined. Remove

Copyright © 1998 Mitchell Repair Information Company, LLC
Sunday, August 26, 2001 08:20PM

column shrouding. Remove combination switch. Disconnect electrical connector.

2) Remove screw attaching switch contact housing to steering lock body and slide out contact housing. See Fig. 2.

Installation

To install, reverse removal procedure.

STEERING LOCK

Removal

Remove steering wheel, column shrouding and combination switch. File slot in bolt attaching steering lock body to column shaft (in order to remove bolt with screwdriver) and remove bolt. Remove steering lock.

Installation

To install, reverse removal procedure and tighten new shear bolts until heads break off.

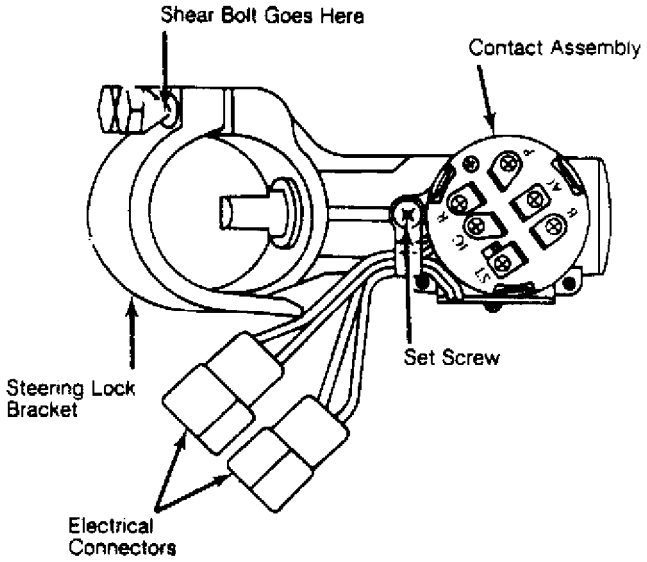

Fig. 2: Exploded View of Ignition Switch (Exc. Pickups)

END OF ARTICLE

STEERING GEAR - MANUAL
Article Text

Copyright © 1998 Mitchell Repair Information Company, LLC
Sunday, August 26, 2001 08:20PM

ARTICLE BEGINNING

1983 STEERING
Mazda - Recirculating Ball

B2000 & B2200 Pickups, GLC Wagon, RX7

DESCRIPTION

Steering gear is a recirculating ball type with a variable ratio, depending on turning angle of sector shaft. The worm gear and steering shaft are an integral (non-separable) unit.

Steering linkage is basically the same for all models, having a non-adjustable center link, 2 adjustable tie rods, an idler arm assembly, and pitman arm.

ADJUSTMENT

NOTE: Adjustments are performed during assembly portion of overhaul. See OVERHAUL procedure in this article.

REMOVAL & INSTALLATION

STEERING GEAR

Removal (B2000 & B2200 Pickups)

1) Remove steering wheel and column, See STEERING COLUMN SWITCHES article. Remove air cleaner and brake master cylinder. On column shift models remove the lower bracket from the selection rod and shift rod.

2) Raise front end and disconnect center link from pitman arm using appropriate puller. Remove bolts and nuts holding steering gear to frame and remove steering gear.

Copyright © 1998 Mitchell Repair Information Company, LLC
Sunday, August 26, 2001 08:20PM

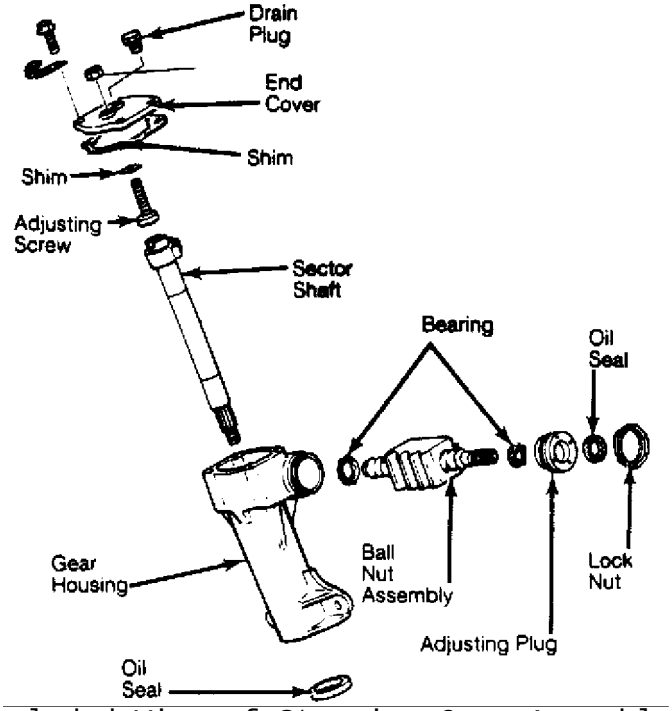

Fig. 1: Exploded View of Steering Gear Assembly (Pickups)

Removal (GLC Wagon)

1) Disconnect negative battery cable. Remove steering wheel and switches. See STEERING COLUMN SWITCHES article. Remove bolts holding column to dash. Loosen dust cover screws, any other column bolts and pull column jacket off shaft.

2) With vehicle raised, disconnect center link from pitman arm with puller. Drop exhaust system. Remove steering gear mounting bolts and pull gear forward after raising vehicle.

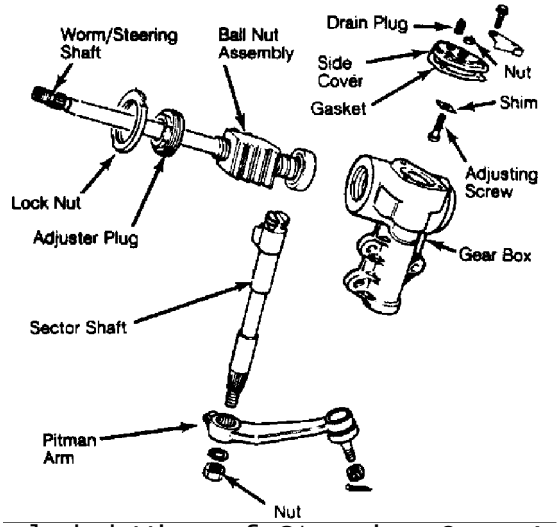

Fig. 2: Exploded View of Steering Gear Assembly (GLC Wagon and RX7)

Removal (RX7)

Copyright © 1998 Mitchell Repair Information Company, LLC
Sunday, August 26, 2001 08:20PM

1) Disconnect negative battery cable. Remove steering wheel and switches. See STEERING COLUMN SWITCHES. Remove hood, steering column covers and air duct.
Disconnect couplers of combination switch and remove the switch assembly.
2) Raise and support front of vehicle. Disconnect pitman arm and center link. Remove nuts and bolts retaining steering gear housing to body. Remove steering gear assembly from vehicle through engine compartment.

Installation (All Models)
To install, reverse removal procedure, ensuring any shims which were removed are installed in original positions.

NOTE: To avoid damage to steering column components, do not apply bending or striking forces to steering shaft or column.

STEERING LINKAGE

Steering linkage may be removed as an assembly or as individual components. Whenever tie rod setting is disturbed, toe-in must be reset. See WHEEL ALIGNMENT SPECIFICATIONS & PROCEDURES article.

OVERHAUL

DISASSEMBLY

Steering Gear
1) On all models, drain gear oil from housing. Remove pitman arm from sector shaft, if not removed previously. Remove sector shaft adjusting screw lock nut. Remove side cover attaching bolts and remove side cover by turning adjusting screw clockwise.
2) Remove sector shaft adjusting screw and shim from sector shaft. Remove sector shaft carefully to avoid damage to oil seal.
3) On B2000 and B2200 models, remove lock ring, adjusting plug with oil seal, outer bearing, worm ball nut assembly and inner bearing.
4) On GLC Wagon and RX7 models, remove ball nut/worm gear adjusting plug lock nut. Then remove adjusting plug and withdraw ball nut, worm gear and steering shaft assembly from gear housing.

INSPECTION

1) Check the action of ball nut assembly on the worm gear. If movement is not smooth for full length of travel, replace worm and ball nut assembly. Worm and ball nut are not serviced separately.
2) Check worm bearings and cups, sector shaft gear surface, and oil seal. Check clearance between sector shaft and housing bore. Clearance should be .004" (.1 mm) or less. If any component is defective, replace it.

Copyright © 1998 Mitchell Repair Information Company, LLC
Sunday, August 26, 2001 08:20PM

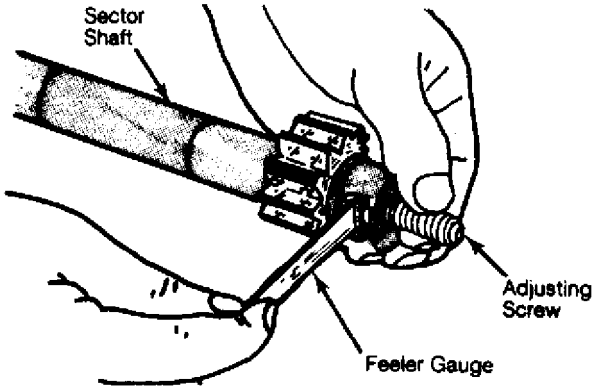

Fig. 3: Checking Sector Shaft Adjusting Screw End Clearance

REASSEMBLY & ADJUSTMENT

Steering Gear

Replace oil seals if necessary. Insert worm gear, ball nut assembly into gear housing. Check preload of worm ball nut.

Worm Bearing Preload

1) Check preload (without sector shaft) with a spring scale and 3.9" (10 cm) attachment, preload reading should be .44-1.10 lbs. (.2-.5 kg).

2) Loosen lock nut and tighten or loosen adjusting screw if preload is not to specifications. Tighten lock nut securely.

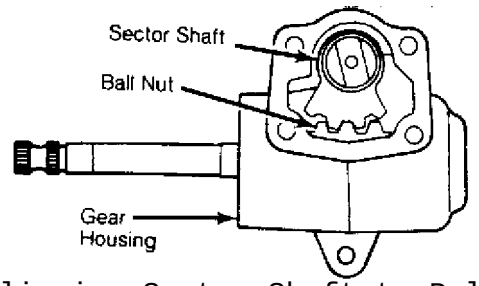

Fig. 4: Aligning Sector Shaft to Ball Nut

Sector Shaft End Play

1) Check clearance between sector shaft adjusting screw and sector shaft. Insert shim so that final clearance will be .004" (.1 mm) or less. Insert sector shaft with ball nut. See Fig. 4.

2) Insert adjusting screw and shim in sector shaft. Place side cover and gasket over adjusting screw and turn adjusting screw until cover is in place, then install cover bolts.

Steering Gear Backlash

1) Install pitman arm to sector shaft. Install and tighten retaining nut. Measure pitman arm backlash. If necessary, turn sector adjusting screw until zero backlash is obtained.

2) Tighten adjusting screw lock nut, taking care not to disturb backlash adjustment.

3) Check worm shaft rotating torque. Attach an INCH lb.

Copyright © 1998 Mitchell Repair Information Company, LLC
Sunday, August 26, 2001 08:20PM

torque wrench to steering shaft upper end. If not to specifications, adjust as necessary. See Final Worm Bearing Preload table. Fill gear housing with lubricant (API GL-4 SAE 90).

FINAL WORM BEARING PRELOAD TABLE

Application	INCH Lbs. (N.m)
B2000 & B2200	5.2-7.8 (.57-.86)
RX7	1.3-2.7 (.14-.30)
GLC Wagon	5.2-10.4 (.6-1.2)

TORQUE SPECIFICATIONS

TORQUE SPECIFICATIONS TABLE

Application	Ft. Lbs. (N.m)
Pitman Arm-to-Sector Shaft	
GLC Wagon, B2000 & B2200	58-87 (80-120)
RX7	108-130 (150-180)
Tie Rod Lock Nut	
B2000 & B2200	22-33 (30-45)
GLC Wagon & RX7	51-58 (70-80)

END OF ARTICLE

SUSPENSION - FRONT
Article Text

Copyright © 1998 Mitchell Repair Information Company, LLC
Sunday, August 26, 2001 08:20PM

ARTICLE BEGINNING

1983 SUSPENSION
Mazda - Suspension - Front

RX7

DESCRIPTION

Mazda uses independent front suspension with MacPherson type struts. Strut assemblies mount between lower control arms and upper fender panels. Strut assemblies consist of inner shock absorbers and coil springs surrounding outside of strut tube housing.

The steering knuckle is connected to lower control arm and strut. Lower control arms pivot at crossmember and are connected by ball joints to steering knuckle. Some models are equipped with a stabilizer bar. Strut rods are installed to maintain alignment and stability.

ADJUSTMENT

WHEEL ALIGNMENT SPECIFICATIONS & PROCEDURES

See WHEEL ALIGNMENT SPECIFICATIONS & PROCEDURES in WHEEL ALIGNMENT section.

WHEEL BEARING ADJUSTMENT

1) Raise and support vehicle. Remove brake caliper and hang out of the way. Remove brake caliper adapter. Remove grease cap, cotter pin and nut lock. Tighten spindle nut to 18-22 ft. lbs. (24-30 N.m).

2) Turn hub a few times to seat bearings. Loosen nut. Install one wheel bolt and attach spring scale. Gradually tighten spindle nut until a preload reading of 1.0-1.4 lbs. (.45-.64 kg) is obtained.

BALL JOINT CHECKING

1) Disconnect strut assembly and tie rod end from steering knuckle arm. Check ball joint dust boot for cracks or other damage. Rotate ball joint stud several times to settle ball joint.

2) Attach spring scale to tie rod hole. Support knuckle with finger and measure torque required to turn ball joint. If scale reading is less than 1 lbs. (0.5 kg), replace ball joint and lower control arm as an assembly.

REMOVAL & INSTALLATION

WHEEL BEARING

Copyright © 1998 Mitchell Repair Information Company, LLC
Sunday, August 26, 2001 08:20PM

Removal

1) Raise and support vehicle. Remove wheel assembly. Remove brake caliper and hang out of the way. Remove brake caliper adapter. Remove grease cap, cotter pin, nut lock and spindle nut.

2) Remove washer and outer wheel bearing. Remove hub/rotor assembly. Remove grease seal and inner wheel bearing. Remove wheel bearing outer races, if required.

Installation

To install, reverse removal procedures. Adjust wheel bearings. See WHEEL BEARING ADJUSTMENT in this article.

LOWER CONTROL ARM

Removal

Raise and support vehicle. Remove wheel assembly. Remove bolts attaching steering knuckle arm to strut assembly. Disconnect tie rod end. Disconnect stabilizer bar. Disconnect strut rod on. Remove steering knuckle arm. Remove lower control arm pivot bolt and remove lower control arm.

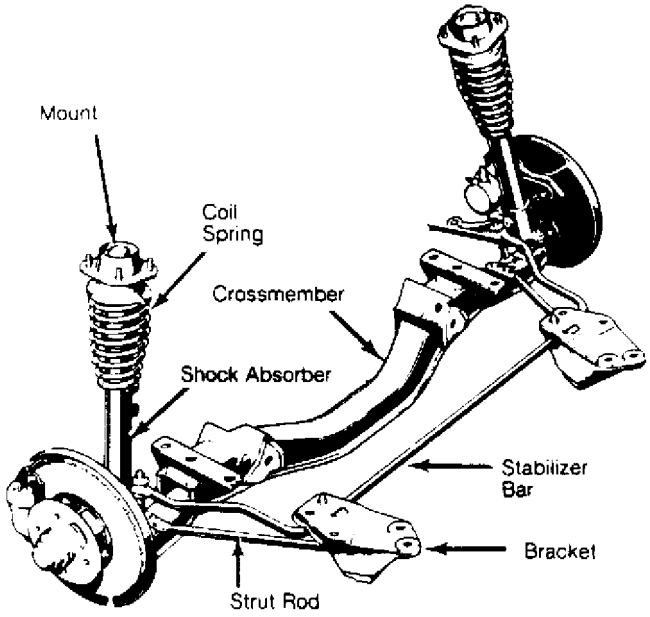

Fig. 1: Front Suspension

Installation

To install, reverse removal procedure. Tighten lower control arm pivot bolt to specified torque with vehicle resting on ground.

STRUT ASSEMBLY

Removal

NOTE: Note position of triangle on top of strut assembly before removing strut assembly on.

Copyright © 1998 Mitchell Repair Information Company, LLC
Sunday, August 26, 2001 08:20PM

1) Raise and support vehicle. Remove wheel assembly. Remove brake caliper and hang out of the way. Remove grease cap, cotter pin, nut lock and spindle nut. Remove washer and outer wheel bearing. Remove hub/rotor assembly.
2) Remove backing plate. Disconnect brake line from strut assembly. Remove bolts attaching steering knuckle arm to strut assembly. Remove nuts attaching strut assembly and remove strut.

Disassembly
1) Clamp strut in vise. Compress coil spring. Remove cap, lock nut and washer from top of piston rod. Remove strut assembly mount, thrust bearing and spring seat. Remove coil spring, dust boot and damper.
2) Remove cap nut and seal. Pry "O" ring from piston guide rod. Pull piston rod and pressure tube assembly out of strut tube. Remove strut from vise and drain fluid, if used.

NOTE: Do not remove piston rod, guide or base valve from pressure tube. Service as a complete assembly only.

Inspection
Check strut tube for cracks or damage. Check rubber parts for deterioration or damage. Inspect coil spring for signs of fatigue or damage. Replace parts as needed.

Reassembly
1) Clamp strut in vise. Insert pressure tube and piston rod assembly into strut tube. Fill strut tube with shock absorber fluid, if used. See STRUT RESERVOIR VOLUME table in this article.
2) Fit pilot (49 0259 590) over threads of piston rod. Apply grease to lip of oil seal and insert cap nut through pilot onto piston rod. Tighten cap nut and pull out piston rod. Seat piston and torque cap nut. Install coil spring and remaining hardware in reverse order of disassembly.

Installation
1) To install, reverse removal procedures. Place triangle in its original position. Adjust wheel bearings. See WHEEL BEARING ADJUSTMENT in this article. Measure the distance between level ground and headlights on.
2) The difference between headlights should not exceed 0.59" (15mm). If height is not within specifications, adjust the difference by inserting adjusting plates between mount and front suspension tower. Do not use more than two adjusting plates on one side.

STRUT RESERVOIR VOLUME TABLE

Application	Ounces (cc)
RX7	7.61 (225)

SUSPENSION - FRONT
Article Text (p. 4)

Copyright © 1998 Mitchell Repair Information Company, LLC
Sunday, August 26, 2001 08:20PM

TORQUE SPECIFICATIONS

TORQUE SPECIFICATIONS TABLE

Application	Ft. Lbs. (N.m)
Backing Plate-to-Steering Knuckle	25-33 (34-45)
Ball Joint-to-Steering Knuckle	43-51 (58-69)
Brake Caliper Adapter-to-Strut	25-33 (34-45)
Brake Caliper Bolts	33-40 (45-54)
Lower Control Arm-to-Frame	29-40 (39-54)
Stabilizer Bar Brackets	27-34 (37-46)
Strut Assembly Cap Nut	
w/Oil Filled Strut	36-43 (49-58)
w/Cartridge Type Damper	58-108 (79-146)
Strut Assembly-to-Body	17-22 (23-30)
Strut Assembly Lock Nut	47-59 (64-80)
Strut Assembly-to-Steering Knuckle	43-51 (58-69)
Strut Rod-to-Frame	80-108 (108-146)
Strut Rod-to-Lower Control Arm	40-50 (54-68)
Tie Rod-to-Knuckle	22-33 (30-45)

END OF ARTICLE

SUSPENSION - REAR
Article Text

Copyright © 1998 Mitchell Repair Information Company, LLC
Sunday, August 26, 2001 08:21PM

ARTICLE BEGINNING

1983 SUSPENSION
Mazda Rear Suspension

RX7

DESCRIPTION

The RX7 rear suspension consists of upper and lower control links, vertically mounted shock absorbers and coil springs. A 3-piece Watts linkage is used to control side-to-side movement. A stabilizer bar is installed in some models.

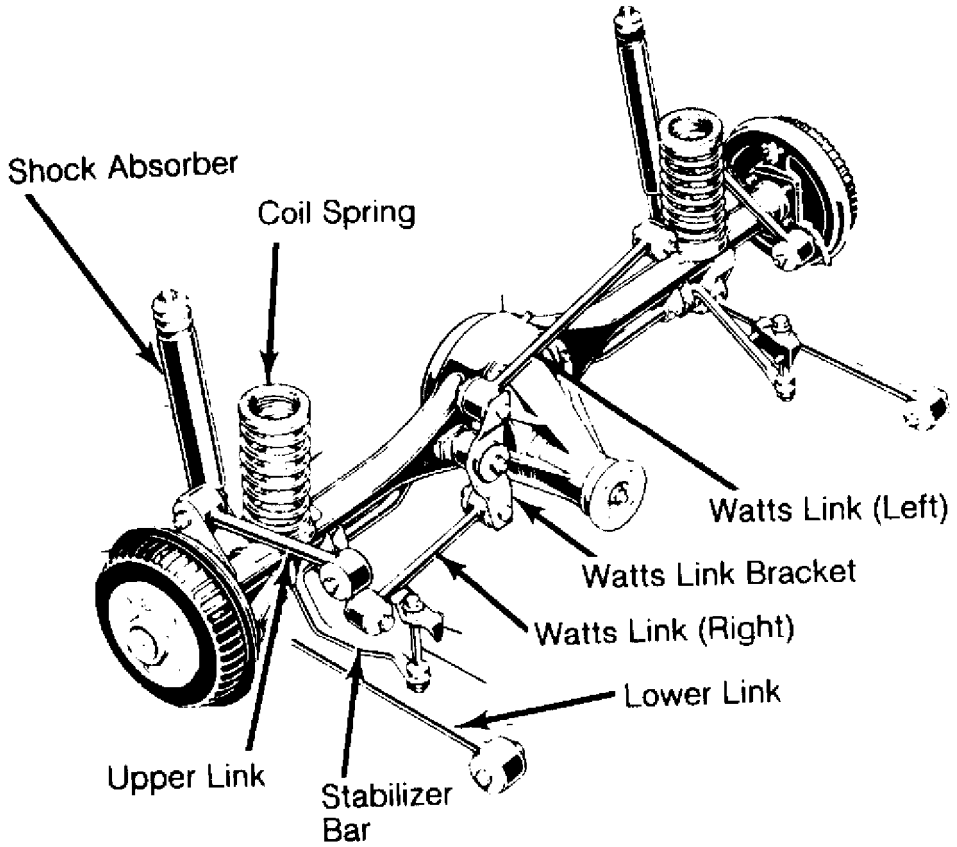

Fig. 1: RX7 Rear Suspension Assembly

REMOVAL & INSTALLATION

COIL SPRING

Removal (RX7)

Raise vehicle and support lower link brackets (front side). Remove wheel assemblies. Support rear axle housing. Disconnect shock absorber lower end. Disconnect upper and lower link pivot bolts at axle housing. Disconnect front end of stabilizer bar, if used.

Copyright © 1998 Mitchell Repair Information Company, LLC
Sunday, August 26, 2001 08:21PM

Disconnect Watt links at axle housing. Slowly lower rear axle and remove coil springs.

Installation

To install, reverse removal procedures. Install coil spring with painted mark pointing toward rear of vehicle. Install left hand shock absorber lower end attaching bolt with head pointing toward center of vehicle. Tighten hardware to specified torque with vehicle resting on floor.

SHOCK ABSORBER

Removal (RX7)

Raise vehicle and support lower link bracket (front side). Remove wheel assembly. Remove side trim in luggage compartment and disconnect shock absorber upper end. Disconnect shock absorber lower end and remove shock absorber.

Installation

To install, reverse removal procedures. Install left hand shock absorber lower end attaching bolt with head pointing toward center of vehicle.

UPPER/LOWER LINKS & WATT LINKS

Removal (RX7)

Raise vehicle and support lower link bracket (front side). Support rear axle if Watt links are being removed. Remove wheel assemblies. Remove link attaching hardware and remove links.

Installation

To install, reverse removal procedures. Install Watt link with painted mark near hub and facing front of vehicle. Install upper link rear bolt with head pointing toward center of Vehicle. Tighten hardware to specified torque with vehicle resting on floor.

STABILIZER BAR

Removal (RX7)

Raise vehicle and support lower link bracket (front side) Remove wheel assemblies. Remove stabilizer bar attaching hardware and remove stabilizer bar.

Installation

To install, reverse removal procedures. Tighten hardware to specified torque with vehicle resting on floor.

TORQUE SPECIFICATIONS

TORQUE SPECIFICATIONS TABLE

Application	Ft. Lbs. (N.m)

Copyright © 1998 Mitchell Repair Information Company, LLC
Sunday, August 26, 2001 08:21PM

Shock Absorber Bolt (Lower End)	47-59 (64-80)
Stabilizer Bar Brackets	27-38 (37-52)
Upper/Lower Link Bolts	56-76 (76-103)
Watt Link-to-Body/Bracket	47-59 (64-80)
Watt Link Bracket-to-Axle	56-76 (76-103)

END OF ARTICLE

JACKING & HOISTING
Article Text

Copyright © 1998 Mitchell Repair Information Company, LLC
Sunday, August 26, 2001 08:21PM

ARTICLE BEGINNING

1983 Jacking & Hoisting
MAZDA

NOTE: These illustrations are not intended to represent exact structure of each vehicle's frame, underbody or body outline. They are presented only to give the mechanic some point of reference.

FRAME & UNDERBODY

The following illustrations indicate areas (parts) of the underbody and frame which may be used to raise and support the vehicle, using either floor jack or hoist. These points are indicated by shaded areas on the frame. See Fig. 1: Sample Illustration.

OUTERBODY

Those points designated on the outline of the body were specifically designed to facilitate the use of the vehicle's own jack. These jacking points are indicated by circular dots on the outline of the body. See Fig. 1: Sample Illustration. If floor jack or hoist is employed, extreme care should be exercised to avoid damaging the outer body shell.

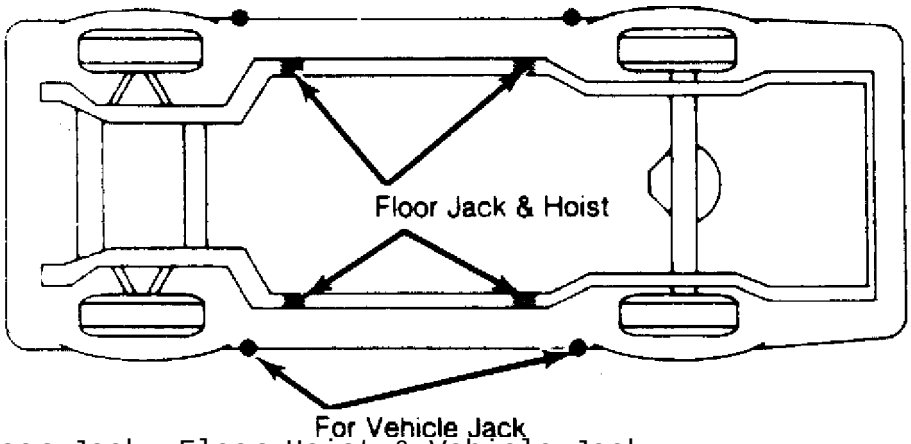

Fig. 1: Floor Jack, Floor Hoist & Vehicle Jack

Copyright © 1998 Mitchell Repair Information Company, LLC
Sunday, August 26, 2001 08:21PM

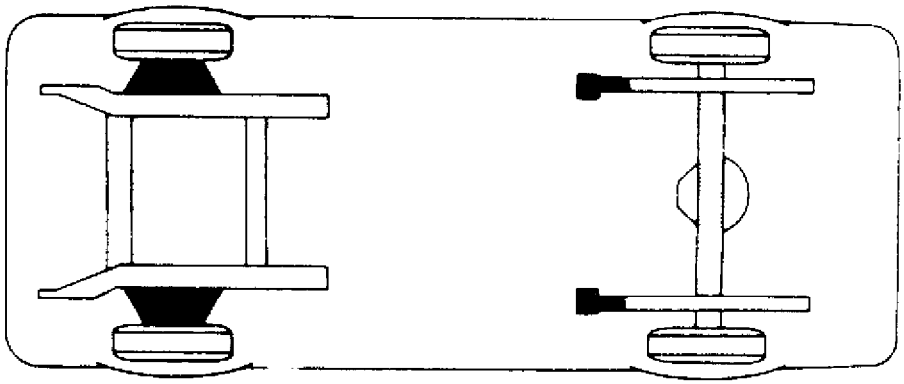

Mazda B2000 & B2200

Fig. 2: B2000 & B2200 Lifting Points

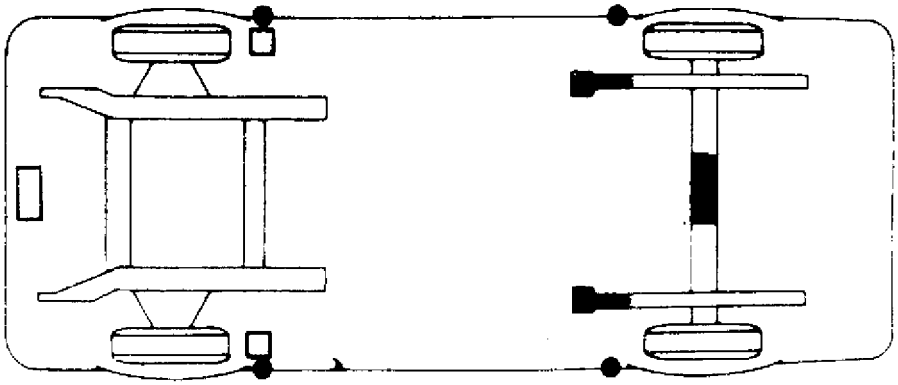

Mazda GLC & 626

Fig. 3: GLC & 626 Lifting Points

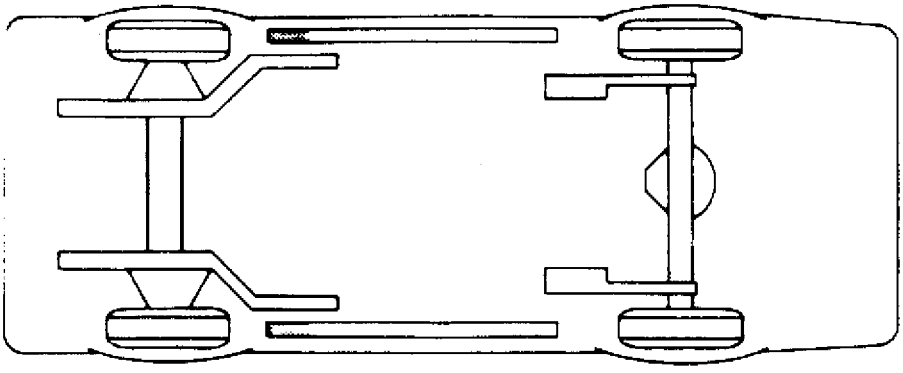

Mazda GLC Wagon

Fig. 4: GLC Wagon Lifting Points

Copyright © 1998 Mitchell Repair Information Company, LLC
Sunday, August 26, 2001 08:21PM

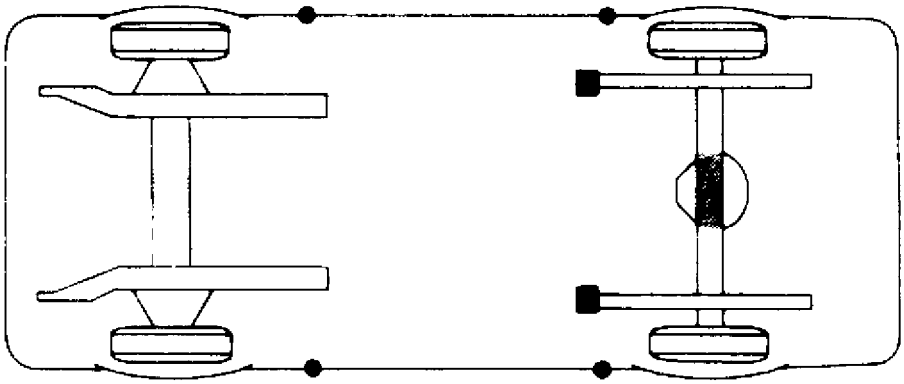

Mazda RX7

Fig. 5: RX7 Lifting Points

END OF ARTICLE

PRE-ALIGNMENT CHECKS
Article Text

Copyright © 1998 Mitchell Repair Information Company, LLC
Sunday, August 26, 2001 08:21PM

ARTICLE BEGINNING

Wheel Alignment
PRE-ALIGNMENT INSPECTION PROCEDURES

PRE-ALIGNMENT CHECKS

Before making wheel alignment adjustment, perform the following checks:

1) Tires should be equal in size and runout must not be excessive. Tires and wheels should be in balance, and inflated to manufacturer's specifications.
2) Wheel bearings must be properly adjusted. Steering linkage and suspension must not have excessive looseness. Check for wear in tie rod ends and ball joints.
3) Steering gear box must not have excessive play. Check and adjust to manufacturer's specifications.
4) Vehicle must be at curb height with full fuel load and spare tire in vehicle. No extra load should be on vehicle.
5) Vehicle must be level with floor and with suspension settled. Jounce front and rear of vehicle several times and allow it to settle to normal curb height.
6) If steering wheel is not centered with front wheels in straight-ahead position, correct by shortening one tie rod adjusting sleeve and lengthening opposite sleeve equal amounts.
7) Ensure wheel lug nuts are tightened to torque specifications.

END OF ARTICLE

WHEEL ALIGNMENT SPECIFICATIONS & PROCEDURES
Article Text

Copyright © 1998 Mitchell Repair Information Company, LLC
Sunday, August 26, 2001 08:21PM

ARTICLE BEGINNING

1983 Wheel Alignment
MAZDA

ADJUSTMENT

TIRE INFLATION (COLD)

Before attempting to check or adjust wheel alignment, make sure tires are properly inflated. Refer to manufacturer's specifications given in owner's manual.

CASTER

GLC
Caster is not adjustable. If caster is not to specifications, inspect suspension for excessive wear or damage. Replace components as necessary.

RX7 & 626
1) Caster and camber angles are adjusted together by changing position of strut support. Remove 4 nuts attaching strut support to fender apron.
2) Raise front of vehicle and support with jack stands. Press strut downward and change position of support according to Table and Fig. 1.
3) Tighten strut support mounting nuts. Lower vehicle and recheck caster and camber.

MacPHEARSON STRUT SUPPORT TABLE

Strut Position	Caster	Camber
A 0ø	0ø	0ø
B 90ø	1/2ø	0ø
C 180ø	1/2ø	1/2ø
D 270ø	0ø	1/2ø

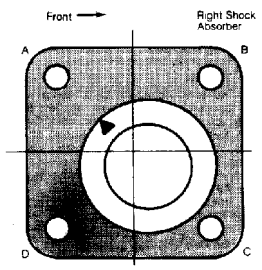

Fig. 1: RX7 & 626 Caster & Camber Adjustment Using MacPhearson Strut Support

Copyright © 1998 Mitchell Repair Information Company, LLC
Sunday, August 26, 2001 08:21PM

Pickups
Change shims between upper control arm shaft and support bracket or turn upper control arm shaft until specifications are obtained.

CAMBER

NOTE: On GLC wagon, camber is not adjustable. If camber is not within specifications, inspect suspension for excessive wear or damage. Replace components as necessary.

GLC
1) Raise front end, support with jack stands and open hood.
2) Remove 2 mounting nuts holding strut support to fender apron. Push mounting block down, turn 180ø and tighten mounting nuts. Note a triangular shaped mark on mounting block. Rotating mark away from engine changes camber to the negative side and opposite direction the opposite happens. Check camber angle.

RX7 & 626

NOTE: See procedure given under RX7 & 626 Caster adjustment.

Pickups
Change shims between upper arm shaft and support bracket until specifications for camber are within limits.

TOE-IN

626 (Front)
Loosen lock nuts and turn tie rods equal amounts. Both tie rods are right-threaded, to increase turn right tie rod toward front of vehicle and to decrease turn left one toward rear of vehicle by the same amount. One full turn equals .24" (6 mm). If boot is twisted or dented, loosen band and straighten boot.

All Other Models (Front)
1) Raise front of vehicle. Turn wheels by hand and mark a line in center of each tire tread. Place vehicle in straight-ahead position and lower vehicle to ground.
2) Measure distance between marked lines at both front and rear of wheel. Make sure measurements are made equal distances from ground.
3) Loosen lock nuts and turn tie rods until adjustment is correct. Tighten lock nuts with bolts horizontal and below rod. This procedure will prevent interference with center link.

GLC FWD & 626 (Rear)
1) Release emergency brake. Mark front and back of tire at same height as center of wheel. Mark center lower section of crossmember. Points marked on tires and crossmember form a triangle and are reference points for adjusting rear toe-in.

Copyright © 1998 Mitchell Repair Information Company, LLC
Sunday, August 26, 2001 08:21PM

2) Turn spacer (star wheel) to make the points from rear of tire to center of crossmember equal. See Fig. 2. Turn both right and left spacers the same amount to adjust toe-in.

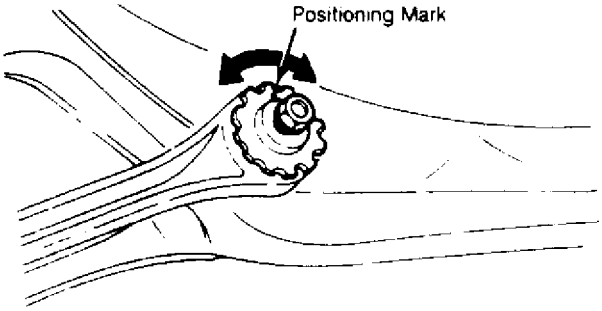

Fig. 2: GLC & 626 Star Wheel Adjustment

3) On GLC only, check parallelism of body and rear wheel. Use existing mark on rear of tire and hole on each side member. Measure from hole on one side to tire on the other. Repeat using other hole and tire. If measurements are not equal, loosen 2 crossmember mounting nuts on each side. Move crossmember so measurement is within .2" (5 mm).

WHEEL ALIGNMENT

WHEEL ALIGNMENT SPECIFICATIONS TABLE

Application	
Mazda	
B2000 & B2200 Pickups	
Caster (Degrees)	1
Camber (Degrees)	+1/3 to 1 1/4
Toe-in (Inches)	0 to 1/64
Toe-Out on Turns (Degrees)	
Inner	.....
Outer	.....
GLC	
Caster (Degrees)	+2 +/- 2/3 (1)
Camber (Degrees)	+1 +/- 1/2
Toe-in (Inches)	0 +/- 1/8 (2)
Toe-Out on Turns (Degrees)	
Inner	.....
Outer	.....
GLC Wagon	
Caster (Degrees)	+1 to 2 1/3 (1)
Camber (Degrees)	+1/4 to 1 1/4 (1)
Toe-in (Inches)	0 to 9/32
Toe-Out on Turns (Degrees)	
Inner	.....
Outer	.....
RX7	

WHEEL ALIGNMENT SPECIFICATIONS & PROCEDURES
Article Text (p. 4)

Copyright © 1998 Mitchell Repair Information Company, LLC
Sunday, August 26, 2001 08:21PM

```
    Caster (Degrees)  ..........................  +3 2/3 +/- 1/2 (3)
    Camber (Degrees)  ...................................  +1 +/- 1/2
    Toe-in (Inches)  ....................................  0 to 9/32
    Toe-Out on Turns (Degrees)
      Inner  ..................................................  .....
      Outer  ..................................................  .....
  626
    Caster (Degrees)  ..............................  +1 2/3 +/- 2/3
    Camber (Degrees)  ..................................  +1/3 +/- 1/2
    Toe-in (Inches)  ............................  +1/8 +/- 1/8 (4)
    Toe-Out on Turns (Degrees)
      Inner  ..................................................  .....
      Outer  ..................................................  .....

(1) - Not adjustable.
(2) - Same for rear.
(3) - Left side only, right side specifications are 4 1/6 +/- 1/2.
(4) - Rear specifications are 0 +/- 1/8.
```

END OF ARTICLE

1.3L ENG NO START/BLOWN FUSE - SHORT IN WIRE HARNESS CAT. 15, NO. 012/85
Article Text

Copyright © 1998 Mitchell Repair Information Company, LLC
Monday, August 27, 2001 06:29AM

ARTICLE BEGINNING

TECHNICAL SERVICE BULLETIN

APPLICATION

1979-84 RX7

SUBJECT

"ENGINE" Fuse Blows/No Start

REFERENCE

Mazda Motors Corp., Service Bulletin, No. 15 012/85, September, 1985

CONDITION & CAUSE

Some 1979-84 RX7 vehicles may exhibit an "ENGINE" fuse that blows, preventing the engine from starting. This problem may be caused by an electrical short circuit in the wiring harness.

REPAIR

Check for a short circuit in the wire harness in the area of the thermostat and air hose to the air cleaner. See Fig. 1.

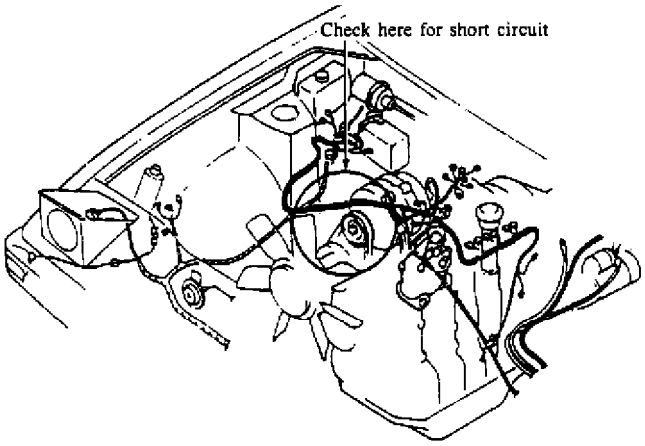

Fig. 1: View of Wiring Harness

END OF ARTICLE

ACCEPTABLE BATTERY DRAIN CAT. 5, NO. 017/88
Article Text

Copyright © 1998 Mitchell Repair Information Company, LLC
Monday, August 27, 2001 06:29AM

ARTICLE BEGINNING

TECHNICAL SERVICE BULLETIN

CURRENT DRAW FROM THE BATTERY

Model: All Models
Bulletin No.: 017/88
Date: 7/27/88
Category: 5

DESCRIPTION

In order to maintain the memory of the electrical equipment such as radio, clock, and several other control units, a small amount of current is drawn from the battery even though the vehicle is not in use. Although the actual current may vary according to the electrical equipment in each vehicle, the following specification can be used to determine if the current draw of the vehicle in question is normal or not.

CURRENT DRAW AMPERAGE

All Vehicles: 15 to 25 mA (Ignition key is removed or in the lock position).

NOTE:
If the ignition key is in the ACC position, up to 250 mA is drawn from the battery. This current draw is large enough to discharge the battery in a few days.

TEST PROCEDURES

1. Turn the ignition switch off and remove the key from the cylinder.
2. Turn off all electrical loads. Make sure all doors and the trunk lid are completely closed.
3. Open the hood and disconnect the negative battery terminal.

NOTE:
If the vehicle is equipped with theft-deterrent system, disconnect the coupler from the hood switch so that the warning light of the theft-deterrent system is not operable.

4. Set the circuit tester to the "DC mA" range, to at least 100 mA range and check the current as follows:

Positive lead from tester to Negative Battery Cable

Negative lead from tester to Negative Battery Post.

CAUTION:
Do not open the door while checking the current, as the tester will be

ACCEPTABLE BATTERY DRAIN CAT. 5, NO. 017/88
Article Text (p. 2)

Copyright © 1998 Mitchell Repair Information Company, LLC
Monday, August 27, 2001 06:29AM

damaged by the excessive current.

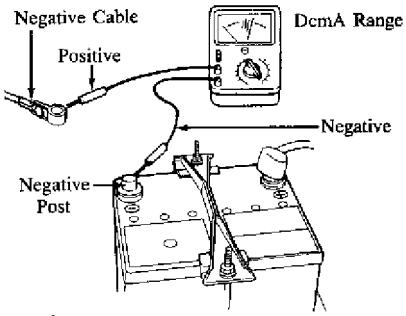

Fig. 1: Testing Currant Draw

END OF ARTICLE

ALTERNATOR/REGULATOR TEST PROCESS/REPLACEMENT INFO CAT. 5, NO. 058/83
Article Text

Copyright © 1998 Mitchell Repair Information Company, LLC
Monday, August 27, 2001 06:30AM

ARTICLE BEGINNING

TECHNICAL SERVICE BULLETIN

IC REGULATOR CHECKING PROCEDURE

Models	All Models
Bulletin No.	058/83
Category	5
Date	11/9/83

DESCRIPTION

Checking procedure for the built-in IC regulator has been established to pin point the alternator problem. Basically, the alternator should be replaced as a unit through the exchange program. However, in case of a shortage of refurbished alternators, you may replace the IC regulator to minimize inconvenience of customers (see Fig. 1).

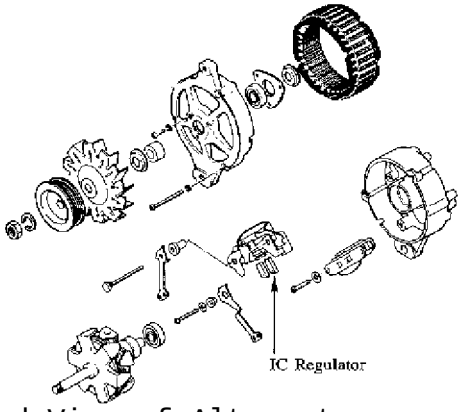

Fig. 1: Exploded View of Alternator

PARTS INFORMATION

Regulator	N221 24 520

CHECKING PROCEDURE

1. Make sure the battery is fully charged.
2. Turn ignition key on to "Ig" position. If the alternator warning light is "off", the problem is likely to be caused by regulator. Leave the key in "Ig" position and take the following step to assure the cause.
3. Insert volt meter between "F" terminal and nearest ground point (Fig. 2).
4. Do not ground to the body of the alternator while positive probe of voltmeter is inserted through the hole for "F" terminal.

Copyright © 1998 Mitchell Repair Information Company, LLC
Monday, August 27, 2001 06:30AM

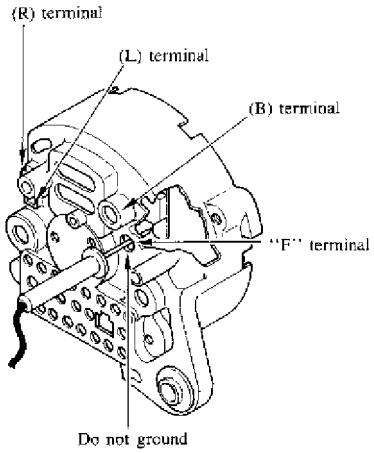

Fig. 2: Location of "F" Terminal

REPAIR PROCEDURE

Please refer to the Service Information for IC regulator replacing procedure.

NOTE: Be sure the insulators are in the proper position as shown in Fig. 3.

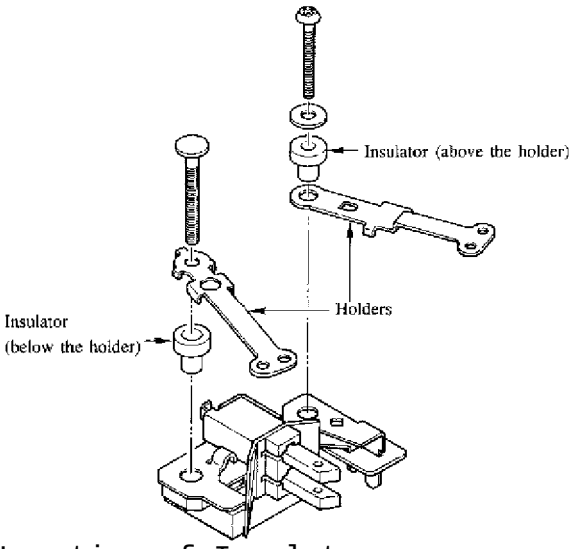

Fig. 3: Proper Location of Insulators

END OF ARTICLE

AUDIO SYSTEM TROUBLESHOOTING PROCEDURES CAT. 15, NO. 078/89
Article Text

Copyright © 1998 Mitchell Repair Information Company, LLC
Monday, August 27, 2001 06:30AM

ARTICLE BEGINNING

TECHNICAL SERVICE BULLETIN

AUDIO SYSTEM TROUBLESHOOTING

Model All Mazda Models
Category 15, Body Electrical System
Bulletin No. 078/89
Date May 5, 1989

DESCRIPTION

To simplify audio system troubleshooting, a flow chart (see Fig. 1) has been prepared. It contains essentials of audio system trouble-shooting procedures, focusing on the following:

* Obtain accurate information of customer's complaint.
* Carry out appropriate diagnosis or troubleshooting to find the faulty part.
* Avoid replacing unnecessary parts.
* Verify whether the customer's complaint results from specific characteristics of FM radio waves. If so, the complaint cannot be corrected by audio component replacement.

Use the following materials with the attached flow chart when carrying out inspection and repair of the audio system.

* Audio System Troubleshooting Procedures (plastic sheet)
* Service Bulletin, Category 15, 050/87 (FM Reception)
* Audio Customer Questionnaire
* Workshop Manual

NOTE: If it becomes necessary to disconnect power to the audio system, be sure to copy down the customer's preset stations. Re-set these stations after repairs are complete.

AUDIO SYSTEM TROUBLESHOOTING PROCEDURES CAT. 15, NO. 078/89
Article Text (p. 2)

Copyright © 1998 Mitchell Repair Information Company, LLC
Monday, August 27, 2001 06:30AM

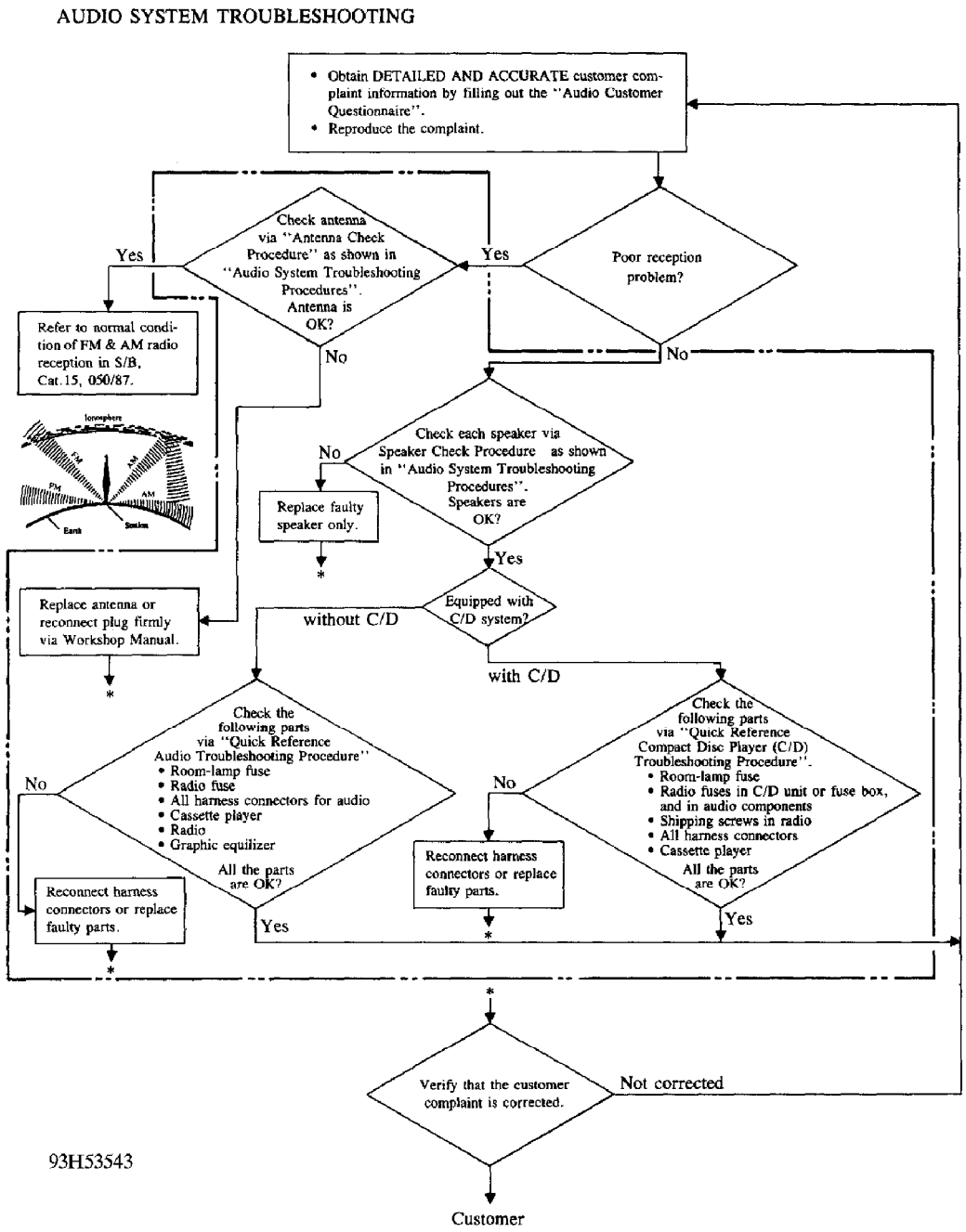

Fig. 1: Audio System Troubleshooting

END OF ARTICLE

BATTERY REMOVAL/INSTALL WIRE CLIP WARNING CAT. 14, NO. 009/85
Article Text

Copyright © 1998 Mitchell Repair Information Company, LLC
Monday, August 27, 2001 06:31AM

ARTICLE BEGINNING

TECHNICAL SERVICE BULLETIN

BATTERY CLAMP BOLT & NUT

Models	RX-7
Bulletin No.	009/85
Category	14
Date	1/22/85

DESCRIPTION

During installation of the battery clamp rod and nut, it is possible for wire clip to become pinched in the threads on the clamp bolt, resulting in the nut binding on the clamp rod. See Fig. 1.

If you encounter this problem, please follow the repair procedure below.

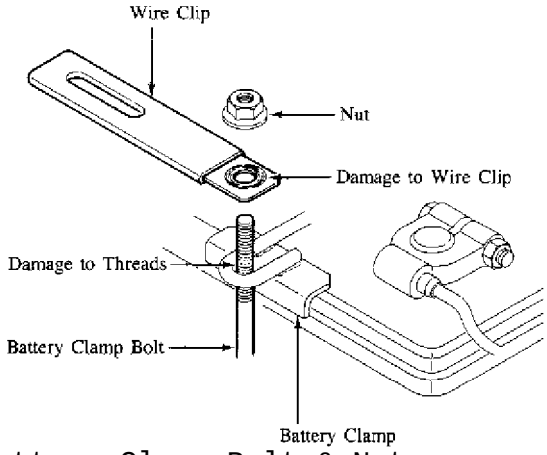

Fig. 1: Battery Clamp Bolt & Nut

PARTS INFORMATION

PART NUMBER	DESCRIPTION
0613 65 857A	Clamp Bolt
9994 00 602	Nut

REPAIR PROCEDURE

1. Carefully remove the nut from the battery clamp bolt.
2. Use a die to repair the threads on the clamp bolt.
3. Install a small washer on top of the wire clip to prevent damage to the threads on the clamp bolt during reinstallation.

END OF ARTICLE

FUSIBLE LINK REFERENCE CHART NO. T-2-3
Article Text

Copyright © 1998 Mitchell Repair Information Company, LLC
Monday, August 27, 2001 06:31AM

ARTICLE BEGINNING

TECHNICAL SERVICE BULLETIN

FUSIBLE LINK REFERENCE CHART

Model: All Mazda
Date: November 1, 1990 (Revised - April 27, 1992)
No: T-2-3
Group: Parts Bulletin

SERVICE INFORMATION

For easy reference, the following list of Fusible Links have been compiled.

FUSIBLE LINK REFERENCE CHART

Year	Model	Location	P/N
1979-82	626	Engine Compartment	8174-66-760B
1983-85	626 Gas	Engine Compartment	3775-67-099
1983-85	626 Diesel	Engine Compartment	H047-67-099
1983-85	626	Alternator	HA67-67-099
1979	RX-7	Under Dash	1175-66-710A
1980	RX-7	Under Dash	8130-66-710
1980	RX-7	Engine Compartment	8341-18-055
1981	RX-7	Under Dash	FA02-67-099
1981-85	RX-7	Engine Compartment	3777-67-099
1981-85	RX-7	Transmission	8341-18-055
1981-85	RX-7	Engine Compartment	8871-67-099
1984-85	RX-7	Engine Compartment	3775-67-099
1981-85	GLC	Engine Compartment	B003-67-099
1981-85	GLC	Engine Compartment	B005-67-099
1981-85	GLC	Engine Compartment	B006-67-099
1977-82	B2000	Engine Compartment	B094-67-099
1983-84	B2000/B2200	Engine Compartment	UA47-66-099
1988-93	MX-6 M/T, Non-Turbo A/T	Engine Compartment	FB01-67-099
1988-93	626 Sedan	Engine Compartment	FB01-67-099
1988-93	626 Hatchback M/T, Non-Turbo A/T	Engine Compartment	FB01-67-099
1990-92	929, 929S	Engine Compartment	FB01-67-099
1986-92	323	Engine Compartment	FB01-67-099
1987-89	323 Wagon	Engine Compartment	FB01-67-099
1986-91, 93	RX-7	Engine Compartment	FB01-67-099

FUSIBLE LINK REFERENCE CHART NO. T-2-3
Article Text (p. 2)

Copyright © 1998 Mitchell Repair Information Company, LLC
Monday, August 27, 2001 06:31AM

1992	MX-3	Engine Compartment	FB01-67-099
1984-86	GLC Wagon	Engine Compartment	8573-66-760

END OF ARTICLE

HIGH PITCH BUZZING NOISE AT DASH: REMOVE OSCILLATOR
Article Text

Copyright © 1998 Mitchell Repair Information Company, LLC
Saturday, September 08, 2001 10:01AM

ARTICLE BEGINNING

TECHNICAL INFORMATION TIP

BUZZING ROTARY

YEAR(S): 1979-85
MANUFACTURER: Mazda
MODEL(S): RX-7

ISSUE: HIGH PITCH BUZZING NOISE AT DASH - REMOVE OSCILLATOR

If you hear a high pitched buzzing noise coming from the center of the dash with the key off on a 1979-85 Mazda RX-7, the cause may be a defective oscillator. The oscillator is located under the hood, in the area near the left headlight.

To stop the noise, unplug the oscillator. The oscillator is used as a dash instrument circuit backup. Removing the oscillator has no other effect except to stop the constant buzzing noise.

Courtesy of Import Service Magazine
with thanks to

James Halderman
Sinclair College
Dayton, Ohio

REFERENCE NUMBER: MAZ0170AP

NOTE: This information has been obtained from sources generally believed to be reliable. Use your own judgment before relying on this data. Neither the suppliers of these Technical Information Tips, nor Mitchell International, guarantees or assumes responsibility for data accuracy or completeness, nor is liability assumed by the suppliers of these Technical Information Tips or Mitchell International for any claims or damages resulting from the use of this information.

END OF ARTICLE

KEYLESS SWITCH SPEED NUT INFORMATION CAT. 15, NO. 010/85
Article Text

Copyright © 1998 Mitchell Repair Information Company, LLC
Monday, August 27, 2001 06:32AM

ARTICLE BEGINNING

TECHNICAL SERVICE BULLETIN

SPEED NUT FOR IGNITION KEY SWITCH

Models	GLC, 626, RX-7 & B2000
Bulletin No.	010/85
Category	15
Date	6/25/85

DESCRIPTION

The speed nut for fixing the key-less switch to the ignition key cylinder housing has been established as a service part. If the replacement of the ignition key switch is necessary, please use the new speed nut to secure the key-less switch. See Fig. 1.

PARTS INFORMATION

NEW PART NO.	OLD PART NO.	DESCRIPTION
BC46 66 158	ÄÄ	Speed Nut

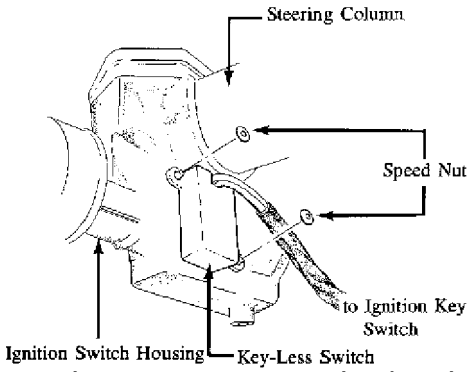

Fig. 1: Securing Key-Less Switch with Speed Nut

END OF ARTICLE

MISCELLANEOUS BLOWN FUSES/ELECTRICAL PROBLEMS CAT. 15, NO. 016/85
Article Text

Copyright © 1998 Mitchell Repair Information Company, LLC
Monday, August 27, 2001 06:32AM

ARTICLE BEGINNING

TECHNICAL SERVICE BULLETIN

APPLICATION

1979-85 RX7

SUBJECT

Miscellaneous Blown Fuses/Electrical Problems

REFERENCE

Mazda Motors Corp., Service Bulletin, No. 15 016/85, October, 1985

CONDITION & CAUSE

Some 1979-85 RX7 vehicles may exhibit one or more of the following electrical problems:

* RADIO, ANTENNA fuse blown
* TAIL, ILLUM fuse blown
* METER, BACK fuse blown
* OPENER fuse blown
* Inoperative rear defroster/rear wiper
* Rear wiper operates with wiper switch in OFF position

One or more of the above problems may be caused by a short circuit in the rear harness. The rear harness may be cut by a sharp metal edge where the harness is routed over the inner wheel well. See Fig. 1. This was fixed in production beginning with VIN JM1FB33 F0852204.

REPAIR

If this problem is present, repair the rear harness as necessary.

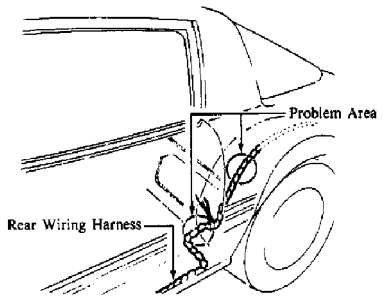

Fig. 1: View of Rear Wiring Harness

END OF ARTICLE

REAR WINDOW DEFROSTER GRID LINE REPAIR PROCEDURE CAT. T, NO. 015/95
Article Text

Copyright © 1998 Mitchell Repair Information Company, LLC
Monday, August 27, 2001 06:33AM

ARTICLE BEGINNING

TECHNICAL SERVICE BULLETIN

REAR WINDOW DEFROSTER GRID LINE REPAIR

Model(s): All Mazda Models
Category: T - Body Electrical System
Bulletin No.: 015/95
Date Issued: November 14, 1995
Date Revised: December 21, 1995

DESCRIPTION

The following procedure should be used to repair broken grid lines on rear window defrosters. Place a copy of these procedures in the appropriate section of the workshop manual.

REPAIR PROCEDURE

1. Turn the defroster switch on with the ignition in the on position.
2. Determine the broken grid line visually or with a test light or voltage meter.
3. Turn the defroster and ignition Off.
4. Clean the area with a glass cleaner.
5. Remove the protective backing from the stencil.
6. Align both ends of the broken grid line with the opening in the stencil and press firmly to attach. See Fig. 1

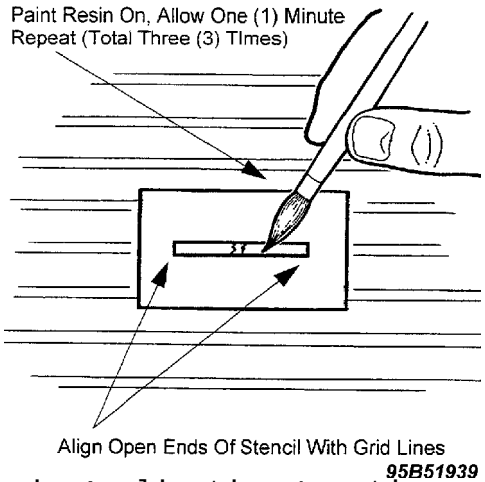

Fig. 1: Resin Application Location

REAR WINDOW DEFROSTER GRID LINE REPAIR PROCEDURE CAT. T, NO. 015/95
Article Text (p. 2)

Copyright © 1998 Mitchell Repair Information Company, LLC
Monday, August 27, 2001 06:33AM

NOTE: Make sure both ends are aligned prior to attaching.

7. Shake the bottle of resin well.

CAUTION: Continuity failure will occur if the ingredients are not mixed completely.

8. Brush on the resin overlapping both ends of the broken grid line.

NOTE: Use paint remover to clean brush for future applications.

9. Repeat application (total of 3 times) when the surface is tack-free (approximately one (1) minute).

10. Allow to dry twenty (20) minutes.

11. Carefully peel stencil from glass.

12. Allow twenty-four (24) hours before activating rear defroster.

PARTS INFORMATION

PARTS INFORMATION TABLE

Part Number	Description
0000 88 5067	Resin

WARRANTY INFORMATION

(Applies To Verified Customer Complaints On Vehicles Covered Under Normal Warranty. Refer To The SRT Microfiche For Warranty Term Information.)

Warranty Type:	A
Symptom Code:	D5
Damage Code:	AA
Part Number Main Cause:	0000 88 5067
Quantity:	0
Operation Number:	XX0777RX
Labor Hours:	0.3 Hrs.

END OF ARTICLE

REVISED WIPER LINK BUSHING CAT. 14, NO. 022/85
Article Text

Copyright © 1998 Mitchell Repair Information Company, LLC
Monday, August 27, 2001 06:33AM

ARTICLE BEGINNING

TECHNICAL SERVICE BULLETIN

WIPER LINK

Models 1981-1985 RX-7
Bulletin No. 022/85
Category 14
Date 10/18/85

DESCRIPTION

A new wiper link has been established as a service part. This new wiper link features a bushing as shown in Fig. 1.

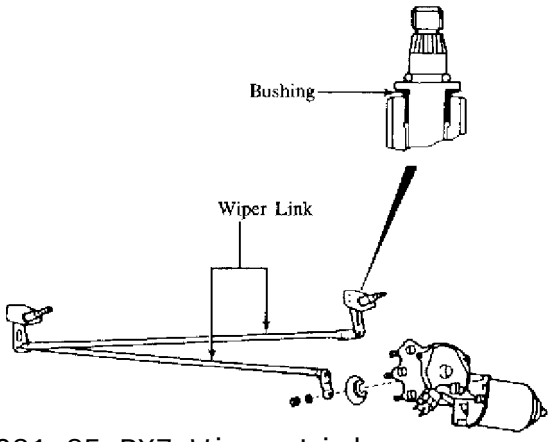

Fig. 1: 1981-85 RX7 Wiper Link

PARTS INFORMATION

NEW PART NO.	OLD PART NO.	DESCRIPTION	INTERCHANGEABILITY	APPLIED MODEL
FA54 76 601A	FA54 76 601	Wiper Link	NEW -> OLD	1984-85 RX-7
8871 76 601B	8871 76 601A	Wiper Link	NEW -> OLD	1981-83 RX-7

NOTE: A new part can be used in place of the former part, but the former part may not be used in place of the new part.

END OF ARTICLE

TURN SIGNAL DOESN'T CANCEL - REPLACE CANCEL CAM CAT. 14, NO. 010/85
Article Text

Copyright © 1998 Mitchell Repair Information Company, LLC
Monday, August 27, 2001 06:34AM

ARTICLE BEGINNING

TECHNICAL SERVICE BULLETIN

TURN SIGNAL SWITCH CANCEL CAM

Models	All Models
Bulletin No.	010/85
Category	14
Date	1/22/85
Symptom	Turn Signal Doesn't Cancel

DESCRIPTION

If the turn signal switch does not cancel, the most probable cause is a broken cancel cam. The cancel cam is available separately and can be replaced as shown below.

REPAIR PROCEDURE

1. Put a mark on the steering wheel and steering shaft so that the steering wheel can be reinstalled in the same position.
2. Remove the retaining nut for the steering wheel and remove the steering wheel with a steering wheel puller. See Fig. 1.

CAUTION: Do not strike the steering shaft with a hammer as this will damage the steering shaft.

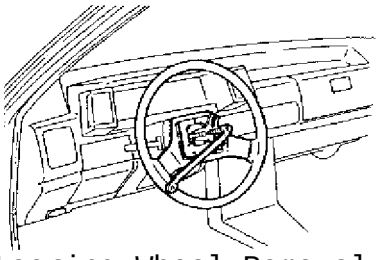

Fig. 1: Steering Wheel Removal

3. Inspect the cancel cam. If the tabs are broken off the cancel cam, the combination switch can be repaired by replacing the cancel cam. See Fig. 2.

NOTE: It is not necessary to remove the combination switch to replace the cancel cam.

Copyright © 1998 Mitchell Repair Information Company, LLC
Monday, August 27, 2001 06:34AM

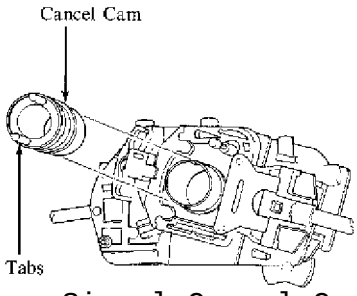

Fig. 2: Turn Signal Cancel Cam

4. Place the turn signal in the "OFF" position .
5. Carefully pry the cancel cam from the combination switch using a screwdriver. See Fig. 3.
6. Install the new cancel cam to the combination switch.

NOTE: It is not necessary to apply additional grease to the cancel cam.

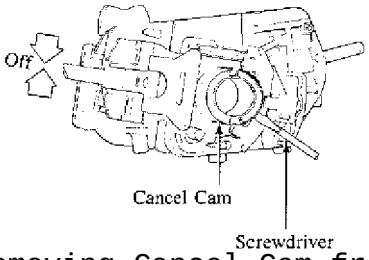

Fig. 3: Removing Cancel Cam from Switch

7. Align the tabs of the cancel cam with the holes in the steering wheel and install the steering wheel.

NOTE: The cancel cam will be broken if the tabs are not aligned with the holes in the steering wheel. See Fig. 4.

8. Install the steering wheel and torque the retaining nut to specification.

TORQUE SPECIFICATION

Model	Specification
RX-7, 626, GLC	29-36 ft-lb
B2000, B2200	22-29 ft-lb

TURN SIGNAL DOESN'T CANCEL - REPLACE CANCEL CAM CAT. 14, NO. 010/85
Article Text (p. 3)

Copyright © 1998 Mitchell Repair Information Company, LLC
Monday, August 27, 2001 06:34AM

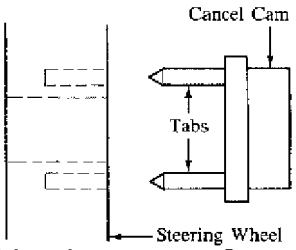

Fig. 4: Aligning Cancel Cam Tabs

END OF ARTICLE

1.2L ENG MODIFIED A/C COMPRESSOR BRACKET INSTRUCTION CAT. 15, NO. 124/83
Article Text

Copyright © 1998 Mitchell Repair Information Company, LLC
Monday, August 27, 2001 06:35AM

ARTICLE BEGINNING

TECHNICAL SERVICE BULLETIN

A/C COMPRESSOR BRACKET INSTALLATION

Models	1983 RX-7
Bulletin No.	124/83
Category	15
Date	11/2/83

DESCRIPTION

The unthreaded portion of studs for air conditioner compressor bracket has been extended for common use of the parts with other models. Because of this change since the production date of September, 1983, it is necessary to insert plain washers between the bracket and securing nuts in order to compensate for the extended length of the studs.

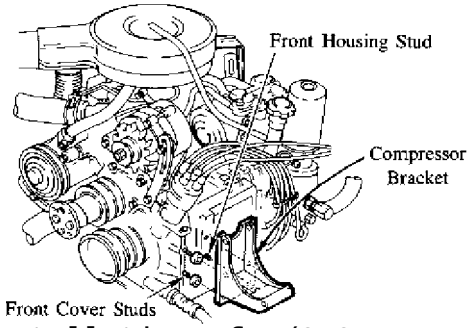

Fig. 1: Installation of A/C Compressor Bracket

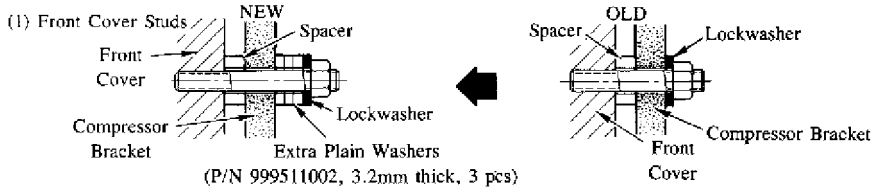

Fig. 2: Installation of A/C Compressor Bracket to Front Cover

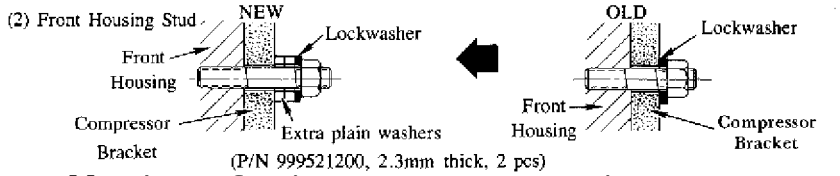

Fig. 3: Installation of A/C Compressor Bracket to Front Housing

VIN OF PRODUCTION CHANGE

RX-7:	JMIFB331 D0762194	September, 1983

1.2L ENG MODIFIED A/C COMPRESSOR BRACKET INSTRUCTION CAT. 15, NO. 124/83
Article Text (p. 2)

Copyright © 1998 Mitchell Repair Information Company, LLC
Monday, August 27, 2001 06:35AM

PARTS INFORMATION

Plain washers are not included in the 1983 RX7 kits but will be in 1984. However, these washers will be available under the following part numbers:

9995 11 022 (3.2mm, 6 pcs.) for Front Cover Stud.
9995 21 200 (2.3mm, 2 pcs.) for Front Housing Stud.

END OF ARTICLE

A/C LITE DIM/NOT ON - WIRE HARNESS CONNECTOR CAT. 16, NO. 008/85
Article Text

Copyright © 1998 Mitchell Repair Information Company, LLC
Monday, August 27, 2001 06:35AM

ARTICLE BEGINNING

TECHNICAL SERVICE BULLETIN

AIR CONDITIONER INDICATOR LIGHT

Models	RX-7
Bulletin No.	008/85
Category	16
Date	7/16/85
Symptom	No A/C Light

DESCRIPTION

Some air conditioner kits manufactured by Lone Star Manufacturing Company may contain incorrectly assembled harness connectors. If the indicator light on the air conditioner switch does not illuminate. or illuminates dimly after installation, the problem may be due to incorrectly assembled G-03 or G-16 connectors. See Fig. 1.

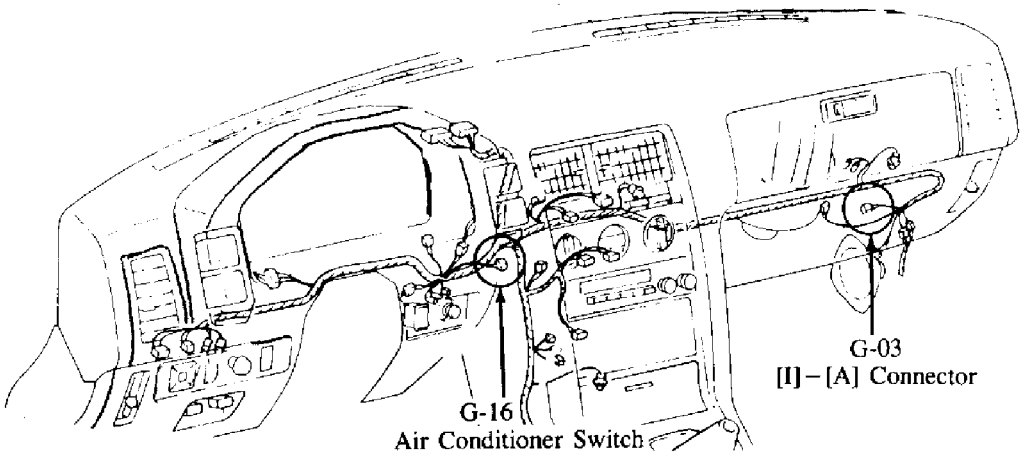

Fig. 1: A/C Indicator Light Harness Routing

REPAIR PROCEDURE

1. Check that the G-03 accessory connector (A) is assembled correctly as viewed from the harness side of the connector. If not, remove the incorrect terminals and reassemble according to the connector diagram.
2. Check that the G-16 accessory connector (A) is assembled correctly as viewed from the harness side of the connector. If not, remove the incorrect terminals and reassemble according to the connector diagram. See Fig. 2.

A/C LITE DIM/NOT ON - WIRE HARNESS CONNECTOR CAT. 16, NO. 008/85
Article Text (p. 2)

Copyright © 1998 Mitchell Repair Information Company, LLC
Monday, August 27, 2001 06:35AM

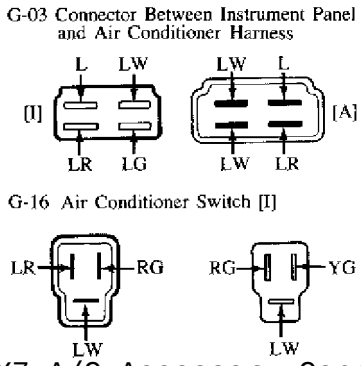

Fig. 2: RX7 A/C Accessory Connectors

END OF ARTICLE

CORRECT FREON CHARGE WARNING SPECS CAT. 16, NO. 034/88
Article Text

Copyright © 1998 Mitchell Repair Information Company, LLC
Monday, August 27, 2001 06:36AM

ARTICLE BEGINNING

TECHNICAL SERVICE BULLETIN

REFRIGERANT CHARGE SERVICE

Model: ALL MODELS WITH A/C
Bulletin No.: 034/88
Date: 6/30/88
Category: 16

DESCRIPTION

To insure proper and efficient operation of the Air Conditioning System, it is of extreme importance to verify that the Air Conditioning System is properly charged. Also, please note that over-charging the Air Conditioning system can cause higher than normal system pressures which could result in Air Conditioning System component damage.

The recommended refrigerant charge for 1988 Mazda vehicles is as follows:

323, RX-7, B-Series Truck.....28 ounces
626, MX-6.....35 ounces
929.....39 ounces

QUICK VISUAL CHECK

It is possible to make a quick visual check of the Air Conditioning System to verify the correct refrigerant charge.

1) Run the engine as fast idle.
2) Operate the Air Conditioning System at maximum cooling for approximately 5 minutes.
3) Observe the sight glass and compare to the possible results as shown in Fig. 1.

CONDITION	INSPECTION	
	DESCRIPTION	SIGHT GLASS VIEW
Correct Charge	During compressor operation, no bubbles are evident. When compressor cycles off, some bubbles are evident, then refrigerant stays clear.	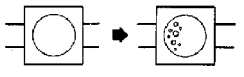
Low Charge	Numerous bubbles are evident during compressor operation. Check system for leaks.	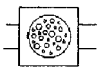
Over Charge	During compressor cycling on or off, no bubbles are evident.	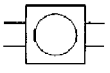

Fig. 1: A/C Charging Sight Glass Symptoms

HEATING SYSTEM TROUBLESHOOTING CAT. U, NO. 93-04
Article Text

Copyright © 1998 Mitchell Repair Information Company, LLC
Monday, August 27, 2001 06:36AM

ARTICLE BEGINNING

TECHNICAL SERVICE BULLETIN

HEATING SYSTEM TROUBLESHOOTING MANUAL

Model	All Mazda Models
Category	U
Bulletin No.	93-04
Date	September, 1993

DESCRIPTION

This Service Bulletin contains a new Heating System Troubleshooting Manual that was developed by the Mazda Canada Quality Assurance Section. The diagnostic procedures were developed and tested in Canada during a Cold Weather Test that took place in February 1993. The diagnostic procedures were tested on vehicles in which customers had complained about a lack of heat for several winters. The effectiveness of these procedures was confirmed.

SPECIAL NOTE

This same manual will also be used as a hand out for all forth coming Training Courses on Climate Control Systems.

HEATER AND DEFROSTER TROUBLESHOOTING MANUAL

INTRODUCTION

An investigation was conducted using customer vehicles at dealer-ships across North America over a two year period. The investigation was conducted to determine if there were any concerns that were difficult to repair using existing Mazda repair manuals.
The following list represents items most commonly left unrepaired or undiagnosed by the dealer.

1. Air leakage between the blower unit and the cooler unit.
2. Missing or mis-installed sealing grommets in the firewall.
3. Incorrect operation of the thermostat.
4. Improper usage of the recirculation and fresh air mode of the ventilation system.

In order to assist in the correct diagnosis and repair of Heating System concerns the following troubleshooting manual was developed. See Fig. 1. for a visual description of the Climate Control System.

Copyright © 1998 Mitchell Repair Information Company, LLC
Monday, August 27, 2001 06:36AM

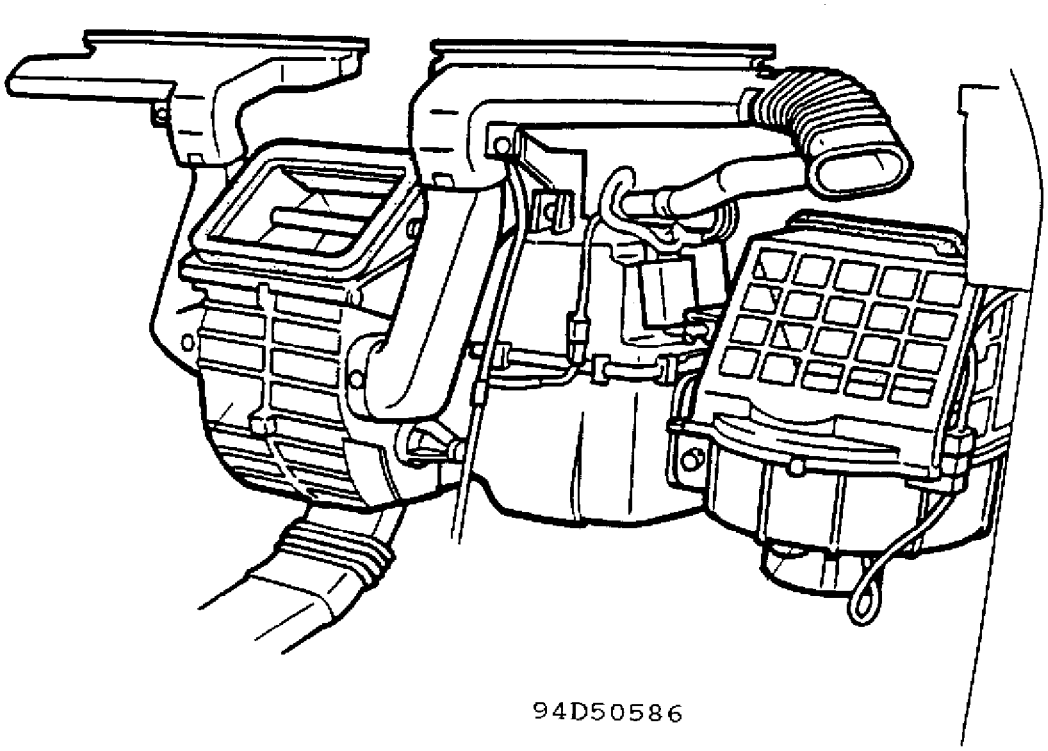

Fig. 1: Climate Control System

USING THIS MANUAL

Follow the flow charts and diagnostic procedures below to repair the complaints which were determined on the Customer Comment Sheet.

```
                    ÚÄÄÄÄÄÄÄÄÄÄÄÄÄÄÄÄÄÄÄÄÄÄÄÄÄ¿
                    ³ 1. Complete customer ³
                    ³    comment sheet.    ³
                    ÀÄÄÄÄÄÄÄÄÄÄÄÄÄÂÄÄÄÄÄÄÄÄÄÄÄÄÄÙ
              ÚÄÄÄÄÄÄÄÄÄÄÄÄÄÄÄÄÄÄÄÄÁÄÄÄÄÄÄÄÄÄÄÄÄÄÄÄÄÄÄÄÄÄ¿
              ³ 2. Determine Nature of complaint ³
              ³ a) problem or b) improper usage  ³
              ÀÄÄÄÄÄÄÄÄÄÄÄÄÄÄÄÄÄÄÄÄÂÄÄÄÄÄÄÄÄÄÄÄÄÄÄÄÄÄÄÄÄÄÙ
        ÚÄÄÄÄÄÄÄÄÄÄÄÄÄÄÄÄÄÄÄÄÄÄÄÄÁÄÄÄÄÄÄÄÄÄÄÄÄÄÄÄÄÄÄÄÄÄ¿
  ÚÄÄÄÄÄÄÄÄÄÄÄÄÄÁÄÄÄÄÄÄÄÄÄÄÄÄÄÄÄÄÄ¿   ÚÄÄÄÄÄÄÄÄÄÄÄÄÄÄÄÄÄÁÄÄÄÄÄÄÄÄÄÄÄÄÄ¿
  ³ 3a. Use diagnostic flow ³   ³ 3b. Instruct on proper ³
  ³     chart to determine  ³   ³     system usage.      ³
  ³     repair procedure.   ³   ÀÄÄÄÄÄÄÄÄÄÄÄÄÄÄÄÄÄÄÄÄÄÄÄÄÄÙ
  ÀÄÄÄÄÄÄÄÄÄÄÄÄÂÄÄÄÄÄÄÄÄÄÄÄÄÄÄÄÄÄÙ
  ÚÄÄÄÄÄÄÄÄÄÄÄÄÁÄÄÄÄÄÄÄÄÄÄÄÄÄÄÄÄÄ¿
  ³ 4. Use check sheet to ³
  ³    perform repairs.   ³
  ÀÄÄÄÄÄÄÄÄÄÄÄÄÄÄÄÄÄÄÄÄÄÄÄÄÄÄÄÙ
```

Diagnostic Procedures

HEATING SYSTEM TROUBLESHOOTING CAT. U, NO. 93-04
Article Text (p. 3)

Copyright © 1998 Mitchell Repair Information Company, LLC
Monday, August 27, 2001 06:36AM

1. Collect detailed complaint information from the customer using the Customer Comment Sheet.

2. Use the information collected on the Customer Comment Sheet to determine the nature of the complaint.

3a. Refer to the diagnostic flow chart and determine the necessary checks.

3b. After determining the complaint is of a usage nature instruct the customer on the proper operation of the system.

4. Use the Check Sheet to perform the necessary repairs.

CUSTOMER COMMENT SHEET

Please complete the following with the aid of the customer.

1. Heater Concern

No.	Customer Comment	Checked	Result
1	Water temp indicator reads low at high speed		
2	While driving the interior temp. is cooler than when parked		
3	Heater outlet air temperature is always cold		
4	Passenger side is cooler than driver's side		
5	Passenger feels cold air at feet		
6	After vehicle interior has reached normal temperature cool air is felt at body		
7	Upper body is cooler than foot		
8	Temperature is unbalanced between driver's and passenger's side		

2. Defroster Concern

1	At cold temperatures or high		

Copyright © 1998 Mitchell Repair Information Company, LLC
Monday, August 27, 2001 06:36AM

	³ humidity the windows never clear ³	³	³
	³ (all) ³	³	³
2	³ Even after reaching normal ³	³	³
	³ operating temp. the front wind- ³	³	³
	³ shield is only cleared 30-50 % ³	³	³
3	³ Rear window does not clear ³	³	³
4	³ Rear window clears only in the ³	³	³
	³ middle ³	³	³

3. Temperature Control Concern

1	³ Difficult to set temperature ³	³	³
2	³ Temperature unbalance between ³	³	³
	³ head and foot ³	³	³
3	³ Temperature unbalance between ³	³	³
	³ driver and passenger seat ³	³	³

4. Other Concerns

1	³ ³	³	³
2	³ ³	³	³
3	³ ³	³	³

Record in the appropriate column if the item was checked and the result.

1. Heater Concern - Use the Diagnostic Flow Chart (see Fig. 2) to determine the necessary diagnostic checks. Refer to the Check Sheet.

Copyright © 1998 Mitchell Repair Information Company, LLC
Monday, August 27, 2001 06:36AM

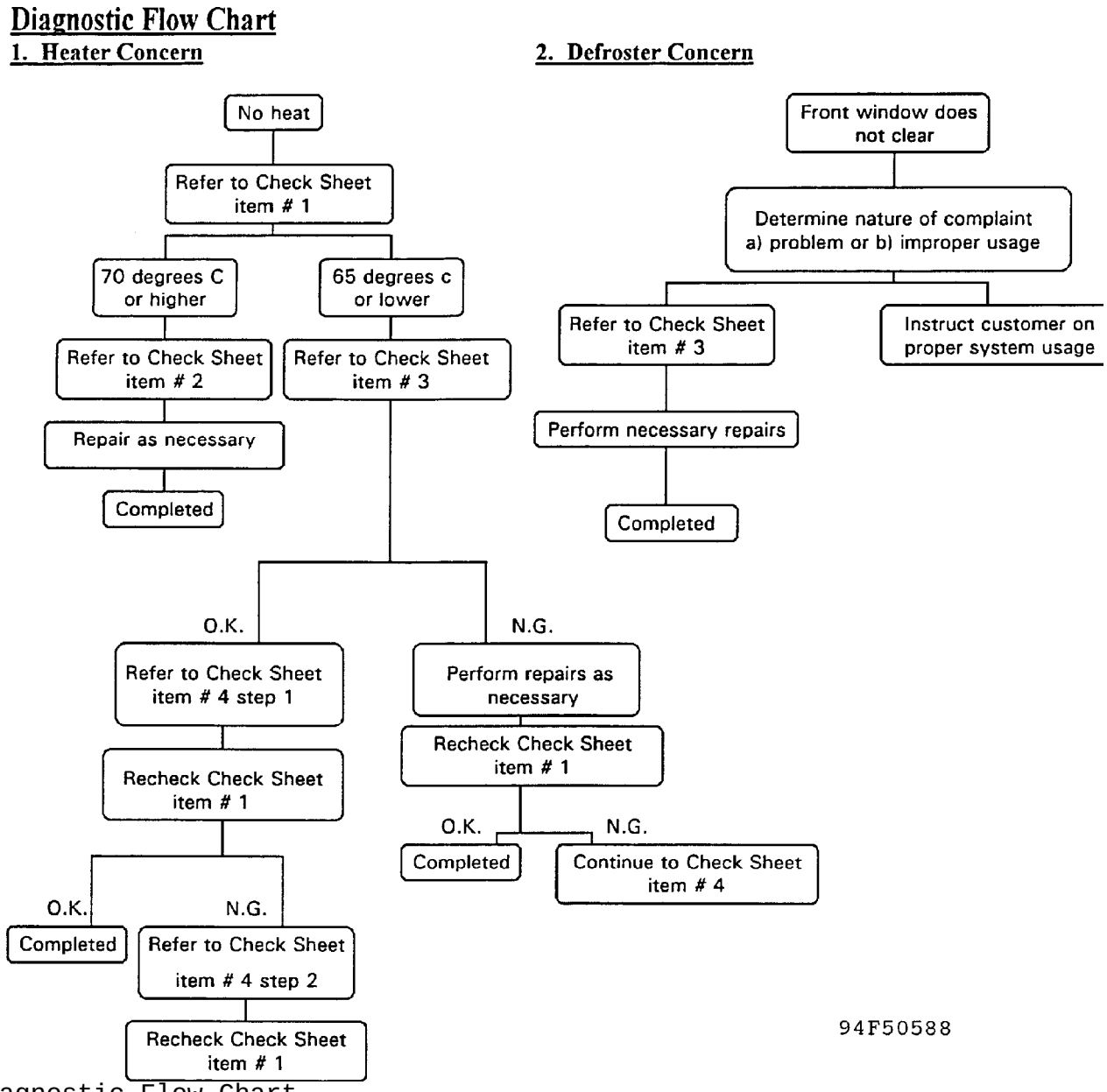

Fig. 2: Diagnostic Flow Chart

CHECK SHEET

Heater concern

Item 1: Measuring Vent Outlet Air Temperature

1. Place transmission in park or place manual transmission in neutral and set the parking brake.

2. Start the engine and let idle until the engine reaches normal operating temperatures.

Copyright © 1998 Mitchell Repair Information Company, LLC
Monday, August 27, 2001 06:36AM

3. Adjust the climate controls to the following settings:

Function	Bi-level
Temperature	Max. hot
Fan speed	2
Recirculate/fresh	Fresh

4. Raise the engine speed to 2000 rpm and hold for ten minutes.

5. Measure the vent outlet air temperature.

NOTE: The thermostat will cycle after the engine has reached operating temperatures. Measure outlet air temperature several times over a ten minute period to attain the high temperature reading (thermostat closed).

Item 2 - Air Leakage

A. Interior Components

1. Remove the lower kick panel on passenger side.

2. Remove the glove box.

3. Adjust the climate controls to the following settings:

Function	Defrost
Temperature	Max. hot
Fan speed	4
Recirculation-fresh	Fresh

4. Check for leakage between blower unit and cooler unit (air duct).

5. Check for leakage between cooler unit (air duct) and heater unit.

NOTE: Air duct is present only on vehicles not equipped with air conditioning.

B. Engine compartment

1. Turn off the engine.

2. Raise the hood and visually inspect the following for proper sealing:

   * A/C drain grommet
   * A/C pipes where they enter the cooling unit at the firewall.
   * Heater pipes where they enter the firewall.
   * All body harnesses that pass through the firewall.
   * Speedometer cable.

Copyright © 1998 Mitchell Repair Information Company, LLC
Monday, August 27, 2001 06:36AM

NOTE: Do not perform the above checks with the engine running.

Item 3 - Link and Wire Adjustment

1. Remove the kick panel on the passenger side of the vehicle.
2. Remove the glove box.
3. Place the transmission in park or set manual transmission in neutral and set the parking brake.
4. Start the engine and allow to idle.
5. Set the climate controls to the following settings:

   Temperature ..... Max. hot
   Recirculation-fresh ... fresh

6. Using Figs. 3 and 4 for reference, ensure the linkages are adjusted properly.

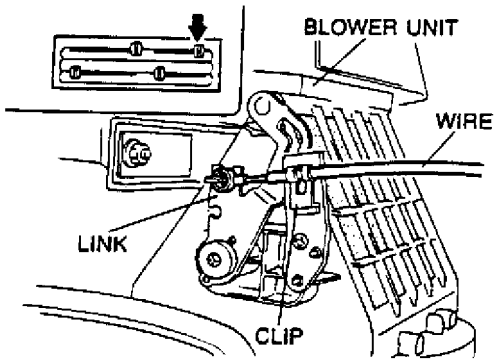

94G50589

Fig. 3: Blower Unit Linkage Adjustment

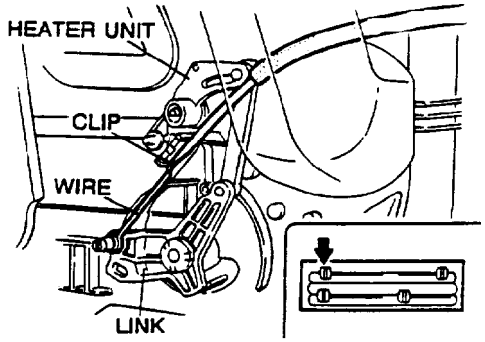

94J50590

Fig. 4: Heater Unit Linkage Adjustment

Item 4 - Coolant By-passing the Thermostat/Thermostat Stuck

Copyright © 1998 Mitchell Repair Information Company, LLC
Monday, August 27, 2001 06:36AM

1. Drain the engine coolant from the radiator.

2. Remove the thermostat from the thermostat housing.

3. Visually inspect the coolant passages and thermostat housing for any casting debris.

4. Feel around inside the thermostat housing for any foreign materials, especially in the area around the heater pipe outlet. If present, remove any casting sand or debris which may be blocking the coolant passages or causing the thermostat to stick open.

5. Verify the operation of the thermostat using the appropriate workshop manual.

NOTE: In addition to the procedure to check for proper thermostat opening the following check must be performed to ensure the thermostat is closing properly. When the thermostat has opened fully continue to bring the water to a boil. When the water has reached a boil remove the thermostat from the water and set it on the work bench. Closely watch as the thermostat begins to close and that it closes smoothly and does not hang up.

6. If the thermostat fails either of the above tests, Replace it.

7. Using a filter, refill the radiator with engine coolant.

Recommended Climate Control System Operation

If all systems check out O.K., or through reviewing the Customer Comment Sheet it is determined the system is being operated incorrectly, instruct the customer on the proper system operation using the operating guidelines listed below.

Item 1 - Air Intake Selector (Fresh/Recirculation)

This selector controls the source of air that enters the vehicle. Usually, for heating or defrosting the air intake selector should be in the "Fresh" or outside air mode. However, if there is a heavy presence of exhaust fumes in the surrounding area it may be necessary to switch to the "Recirculation" mode. It is important to remember to return to the "Fresh" mode because humidity may build up in the "Recirculation" mode causing the windows to fog up. See Fig. 5. Another method to help reduce humidity within the vehicle is to use the Air Conditioning system. Its dehumidifying characteristics can be taken advantage of in any situation.

Copyright © 1998 Mitchell Repair Information Company, LLC
Monday, August 27, 2001 06:36AM

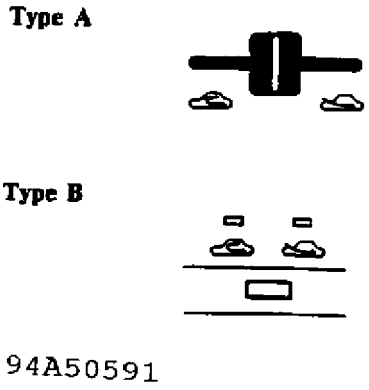

Fig. 5: Air Intake Selector (Type A and B)

Item 2 - Function Selector

This selector controls the direction of the airflow from the vents. On initial start during cold or high humidity temperatures the selector should be placed in the defrost position and the fan speed set to 3 or 4. After the front and side windows become clear the selector can be switched to defrost/heat and then to heat only as necessary and the fan speed reduced. If the front or side windows begin to fog again while driving the selector should be reset to the defrost/heat or full defrost and the fan speed adjusted as necessary. In addition to the above, air-conditioning can be used in conjunction with the heating system to control the humidity level in the vehicle while providing heat.

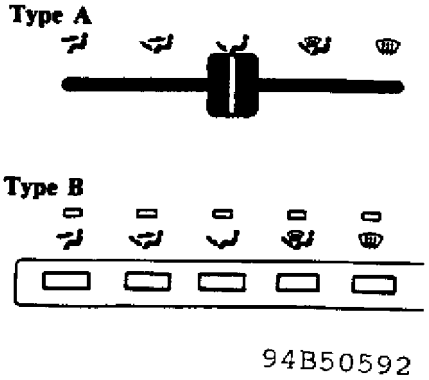

Fig. 6: Function Selector (Type A and B)

Item 3 - Temperature Selector Lever

This lever controls air temperature by sliding the lever either to the right for hot or to the left for cold. On start up during cold temperatures the selector should be set to the full heat position at far right of the selectors travel. See Fig. 7.
As the interior of the vehicle reaches the desired temperature the selector should be adjusted to the left towards the cold setting by increments until the desired temperature is reached.

HEATING SYSTEM TROUBLESHOOTING CAT. U, NO. 93-04
Article Text (p. 10)

Copyright © 1998 Mitchell Repair Information Company, LLC
Monday, August 27, 2001 06:36AM

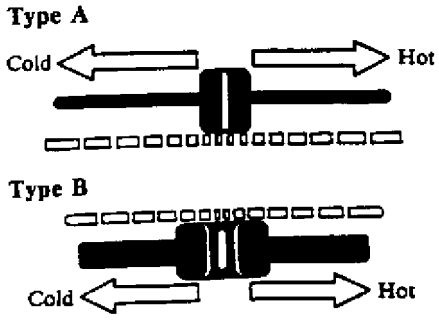

Fig. 7: Temperature Selector (Type A and B)

Climate Control System

Shown in Fig. 8 is a typical climate control system. Detailed descriptions of each function are found under the heading "Driving Your Mazda" in the appropriate Owners Manual.

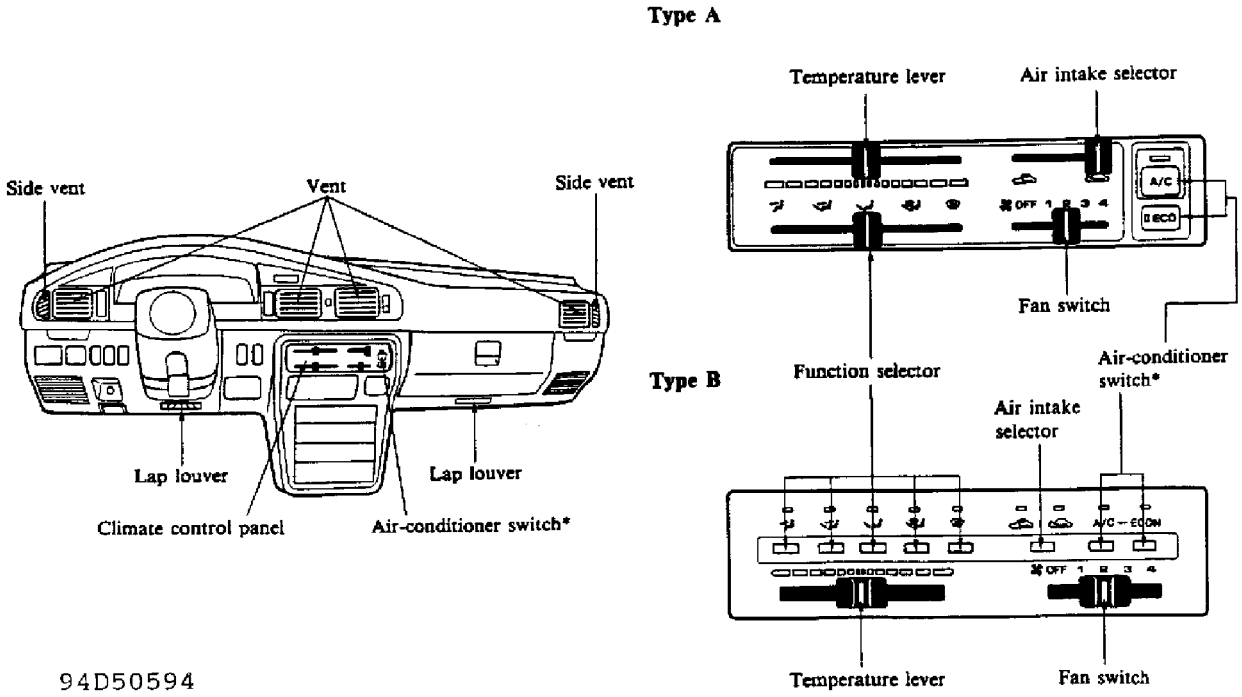

Fig. 8: Climate Control System Layout

END OF ARTICLE

INOPERATIVE A/C - BLOWN FUSIBLE RECEIVER/DRYER PLUG CAT. 16, NO. 009/85
Article Text

Copyright © 1998 Mitchell Repair Information Company, LLC
Monday, August 27, 2001 06:36AM

ARTICLE BEGINNING

TECHNICAL SERVICE BULLETIN

APPLICATION

1979-85 RX7

SUBJECT

Inoperative A/C

REFERENCE

Mazda Motors Corp., Service Bulletin, No. 16 009/85, September, 1985

CONDITION & CAUSE

Some 1979-85 RX7 vehicles may exhibit an inoperative air conditioning system. This condition may be caused by a variety of factors blowing the fusible plug on the receiver/drier.

REPAIR

1) If the fusible plug on the receiver/drier is blown, replace the receiver/drier and evacuate the A/C system.
2) Check the tension of the compressor drive belt. With center span of belt pushed with a force of 22 lbs. (10 kg), deflection should be 5/16-3/8" (8-10 mm). Ensure the fins on the condenser are not clogged or restricted and clean as necessary.
3) Attach an air conditioning manifold to the suction and discharge fittings. If the high pressure gauge shows excessive pressure, check the fan drive clutch and replace as necessary.

END OF ARTICLE

POOR A/C COOLING - ADJUST A/C THERMOSTAT CAT. 16, NO. 006/85
Article Text

Copyright © 1998 Mitchell Repair Information Company, LLC
Monday, August 27, 2001 06:37AM

ARTICLE BEGINNING

TECHNICAL SERVICE BULLETIN

NIPPONDENSO AIR CONDITIONER

Models	RX-7 13B
Bulletin No.	006/85
Category	16
Date	5/17/85
Symptom	Poor Cooling

DESCRIPTION

If the customer objects to the cooling performance of the air conditioner on RX-7 13B vehicles, please follow the procedure described below.

REPAIR PROCEDURE

1. Check the air conditioning system for insufficient cooling according to the current Service Information. If no problem is found, proceed to Step 2.
2. Remove the glove box and the under cover. See Fig. 1.

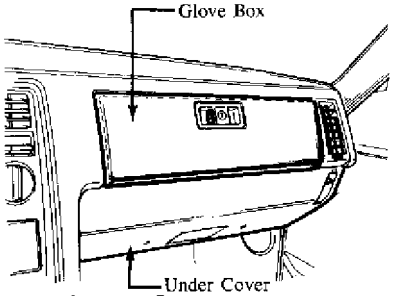

Fig. 1: Removing Glove Box & Under Cover

3. Remove the 2 screws securing the thermostat. Pull the thermostat approximately "1" away from the evaporator in order to provide access to the thermostat adjusting screw.

NOTE: Do not damage the capillary tube attached to the thermostat by excessive bending or twisting. See Fig. 2.

Copyright © 1998 Mitchell Repair Information Company, LLC
Monday, August 27, 2001 06:37AM

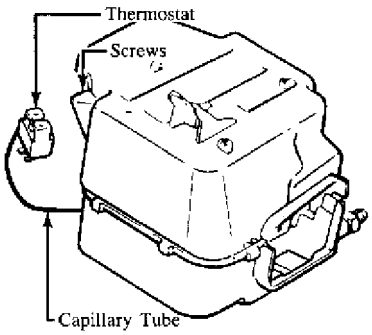

Fig. 2: Removing 2 Screws Securing the Thermostat

4. Turn the adjusting screw of the thermostat clockwise 90ø from the original position.

CAUTION: Do not turn the adjusting screw more than 90ø, otherwise the evaporator core will freeze, resulting in an adverse effect on the cooling performance. See Fig. 3.

5. Reassemble in the reverse order of disassembly.

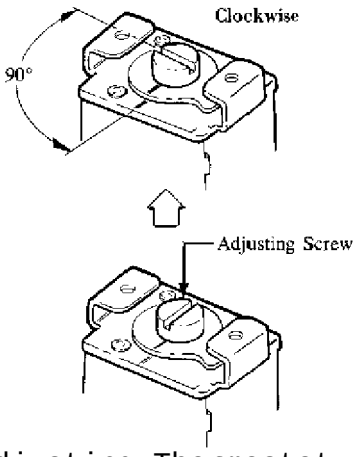

Fig. 3: Adjusting Thermostat

END OF ARTICLE

POOR COOLING - DIAGNOSING/REPAIR A/C LEAKS CAT. 16, NO. 033/88
Article Text

Copyright © 1998 Mitchell Repair Information Company, LLC
Monday, August 27, 2001 06:37AM

ARTICLE BEGINNING

TECHNICAL SERVICE BULLETIN

DIAGNOSIS & REPAIR OF A/C REFRIGERANT LEAKS

Model: ALL MODELS with A/C
Bulletin No.: 033/88
Date: 6/30/88
Category: 16
Symptom: Poor Cooling

DESCRIPTION

When diagnosing customer complaints regarding insufficient cooling and a refrigerant leak is suspected, please follow these procedures for locating and repairing the leak in order to prevent unnecessary component replacement.

VERIFY THE CUSTOMER'S COMPLAINT

1. Check the outlet air volume and temperature. (However, the outlet temperature will vary according to ambient conditions. 35-45 degrees F is normal)
2. Verify the compressor clutch operation. (The compressor will not operate if the system is empty of refrigerant.)

VERIFY THE STATE OF CHARGE AMOUNT

The following indication shows low charge condition. (Fig. 1)

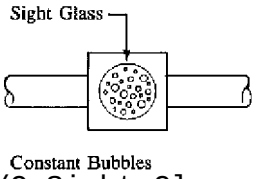

Fig. 1: A/C Sight Glass

CHECK FOR LEAK IN THE ENGINE COMPARTMENT

1. Visually check all components for obvious leaks and signs. Also, check the fittings by hand for tightness.

NOTE:
Some leaks may have an oil stain around leak area.

2. Use the electric leak detector to locate the leak.

When using leak detector:
a) the system should be at least partially charged.
b) the detector probe should be moved slowly at a rate of about 1

Copyright © 1998 Mitchell Repair Information Company, LLC
Monday, August 27, 2001 06:37AM

inch a second.

3. Whenever possible, the detector probe should be held underneath the components since the refrigerant is heaver than air. (Fig. 2)

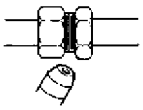

Fig. 2: Freon Detector Inspection Angle

HINT: Hold the electric leak detector probe near the drain hose. Refrigerant from evaporator core may be detected through the water drain hose.

INVESTIGATION & REPAIR

Most of the leaks from the pipe connection can be fixed with O-ring replacement and proper torquing, but please pay attention to the failure on pipe and components. (Fig. 3)

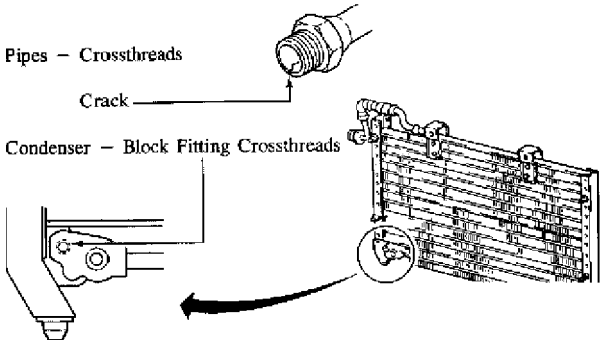

Fig. 3: Damaged Component Illustration

LEAK TEST

1. After replacing O-rings or components, evacuate the system at least 10 minutes and hold the vacuum further 10 minutes.
2. If the vacuum does not drop, no leak is evident. Charge the system with proper amount of refrigerant if it still leaks, check for leak from cooling unit area.
3. Remove the cooling unit and look for the oil stain.

HINT: Before removing the cooling unit, charge the system with a leak-detector-refrigerant which contains a dye. After operating the system for a period of time, any leaks will be identified by a dye stain around the leaking area.

REPAIR

Replace the O-ring at the expansion valve connection, or evaporator core.

RECEIVER DRIER REPLACEMENT CRITERIA (CANADIAN) CAT. U, NO. 95-02
Article Text

Copyright © 1998 Mitchell Repair Information Company, LLC
Monday, September 03, 2001 03:25PM

ARTICLE BEGINNING

TECHNICAL SERVICE BULLETIN

RECEIVER DRIVER REPLACEMENT CRITERIA WHEN REPLACING OTHER A/C COMPONENTS

Model(s): All Mazda Models with A/C (Canadian)
Category: U - Heater and Air Conditioner
Bulletin No.: 95-02
Date: March, 1995

APPLICABLE MODELS/VINS

All models equipped with R12 and R134a (Except 1994 and later B-Series vehicles).

DESCRIPTION

The following information is designed to assist dealers in determining the necessity to replace the receiver-drier when replacing other A/C components. Do not replace the receiver-drier unless the following criteria have been met.

RECEIVER-DRIER REPLACEMENT CRITERIA

Replace the receiver-drier when the A/C system has been ruptured and all system pressure is lost.

Receiver-drier will require replacement if the compressor oil becomes discolored or foreign substances become visible (Refer to the flow chart in this article).

NOTE: Refer to section U of the workshop manual for additional receiver-drier diagnostic procedures.

If an A/C component has failed, extract the compressor oil from the failed part and inspect the oil according to the procedure described in the following flow chart. Follow the procedure to determine if the receiver-drier requires replacement as a precaution.

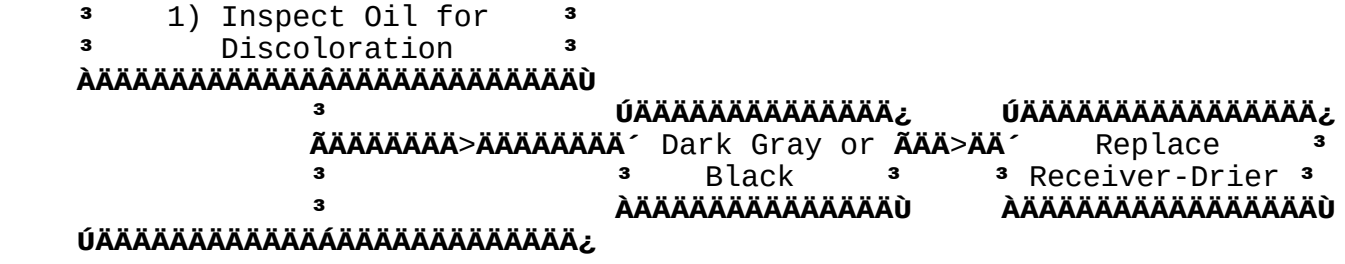

RECEIVER DRIER REPLACEMENT CRITERIA (CANADIAN) CAT. U, NO. 95-02
Article Text (p. 2)

Copyright © 1998 Mitchell Repair Information Company, LLC
Monday, September 03, 2001 03:25PM

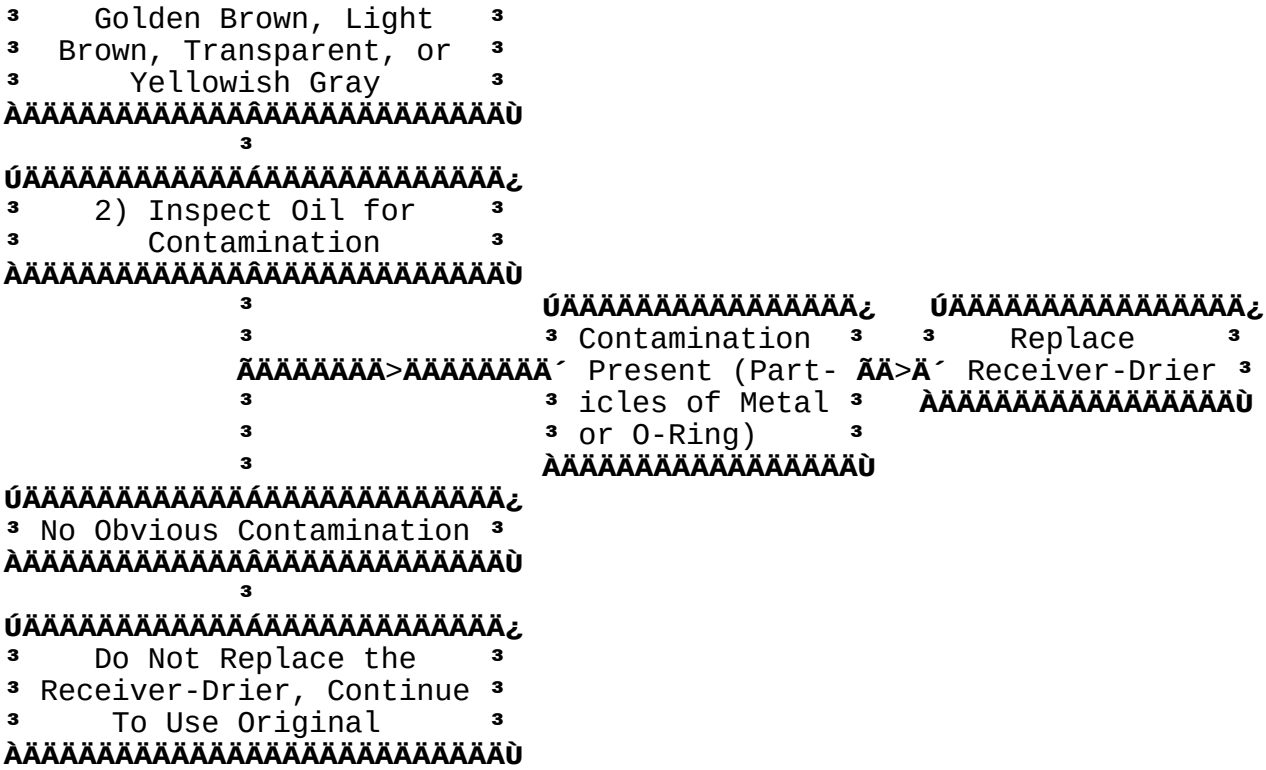

CAUTION: Before charging, always evacuate the A/C system thoroughly to remove air and moisture. Use a vacuum pump to evacuate the system. Hold vacuum at 29 inches (740mm Hg) for 5-10 minutes.

END OF ARTICLE

RECEIVER DRIER REPLACEMENT CRITERIA - INFORMATION CAT. U, NO. 001/95
Article Text

Copyright © 1998 Mitchell Repair Information Company, LLC
Monday, September 03, 2001 03:25PM

ARTICLE BEGINNING

TECHNICAL SERVICE BULLETIN

RECEIVER DRIVER REPLACEMENT CRITERIA WHEN REPLACING OTHER A/C COMPONENTS

Model(s): All Mazda Models with A/C
Category: U - Heater and Air Conditioner Systems
Bulletin No.: 001/95
Date: February 15, 1995

APPLICABLE MODELS/VINS

All models equipped with R12 and R134a (Except Navajo and 1994 and later B-Series vehicles.

DESCRIPTION

The following information is designed to assist dealers in determining when to replace the receiver-drier when replacing other A/C components. Do not replace the receiver-drier unless the following criteria have been met.

RECEIVER-DRIER REPLACEMENT CRITERIA

* Replace the receiver-drier when the A/C system has been ruptured and ALL system pressure is lost.

* Receiver-drier will require replacement if the compressor oil becomes discolored or foreign substances become visible (Refer to the flow chart in this article).

NOTE: Refer to section U of the workshop manual for additional receiver-drier diagnostic procedures.

If an A/C component has failed, extract the compressor oil from the failed part and inspect the oil according to the procedure described in the following flow chart. Follow the procedure to determine if the receiver-drier requires replacement as a precaution.

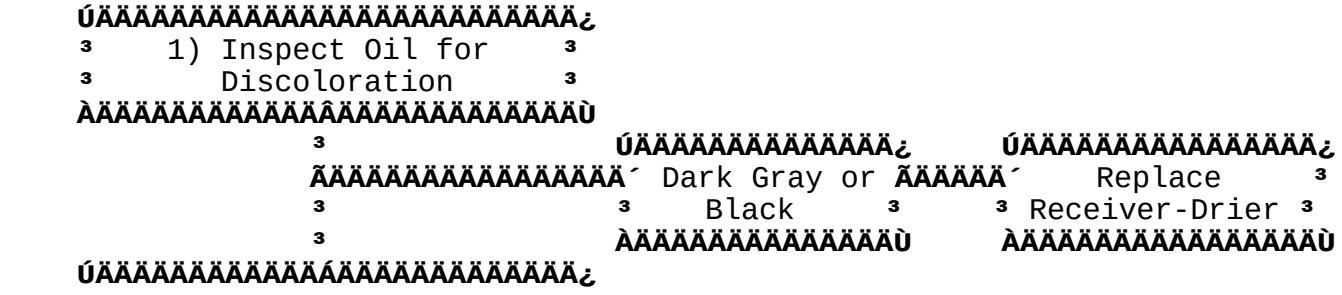

Copyright © 1998 Mitchell Repair Information Company, LLC
Monday, September 03, 2001 03:25PM

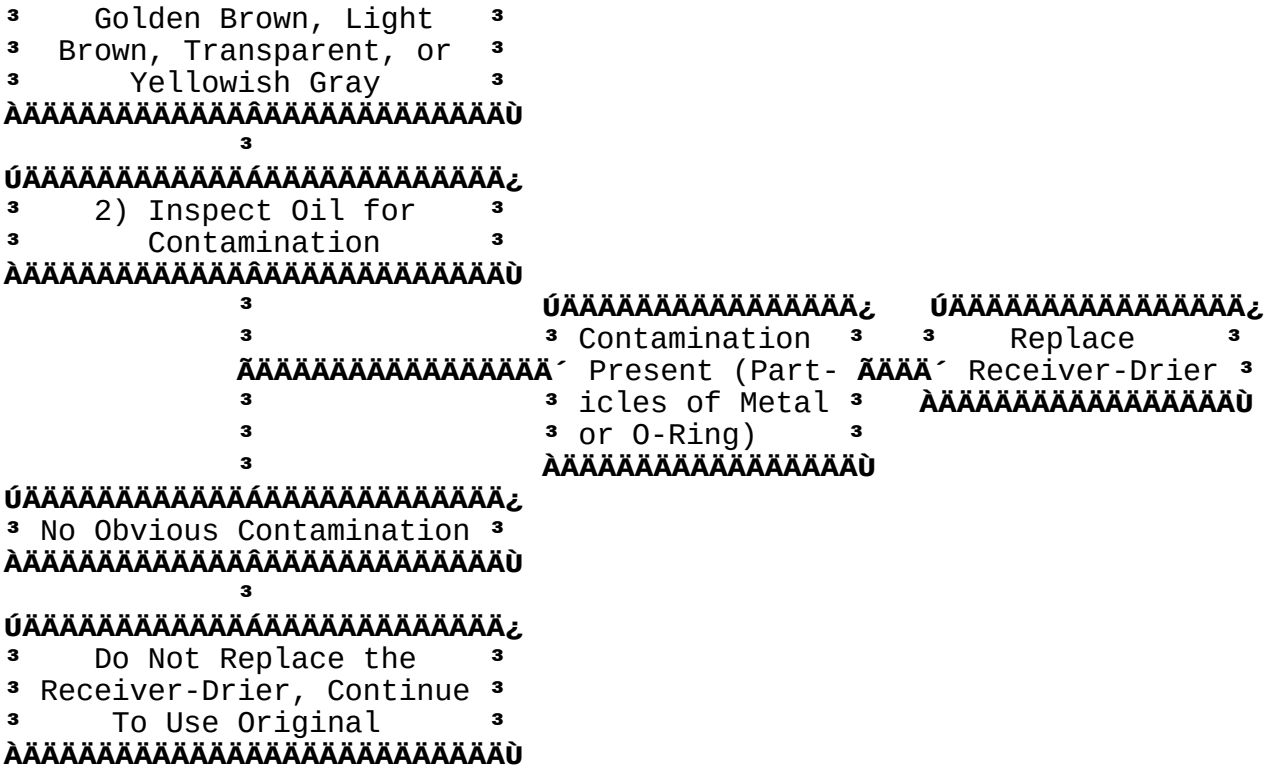

CAUTION: Before charging, always evacuate the A/C system thoroughly to remove air and moisture. Use a vacuum pump to evacuate the system. Hold vacuum at 29 inches (740mm Hg) for 5-10 minutes.

END OF ARTICLE

USE OF A/C TRACER DYE SERVICE INFO CAT. U, NO. 008/97
Article Text

Copyright © 1998 Mitchell Repair Information Company, LLC
Monday, September 03, 2001 03:26PM

ARTICLE BEGINNING

TECHNICAL SERVICE BULLETIN

USE OF A/C TRACER DYE

Model: All Mazda models
Category: U - Heater & Air Conditioner Systems
Bulletin No.: 008/97
Date: May 19, 1997

DESCRIPTION

Use a fluorescent A/C leak detecting tracer dye and light for finding minute, intermittent leaks.

NOTE: Most electronic leak detectors can detect small steady leaks, but are ineffective on minute, intermittent leaks.

WHEN USING A/C TRACER DYE METHOD

1. Follow the A/C tracer dye manufacturers instructions.

NOTE: Different manufacturers have different methods for installing, measuring and diagnosing with their particular product.

CAUTION:

* Use only a tracer dye that is compatible with the type of refrigerant and oil in the vehicle's A/C system.

* Tracer dye can lead to misdiagnosis and unnecessary parts replacement if used improperly.

2. After repairing the leak, clean the area that is covered with A/C tracer dye.

NOTE: This will prevent a future technician from mistaking this residue as a current leak.

3. When diagnosing an A/C leak on a vehicle that previously had tracer dye installed, thoroughly clean the suspected area and re-verify the leak prior to repairing.

4. After repairing the leak, evacuate and recharge the system as outlined in the workshop manual.

NOTE: DO NOT add additional A/C tracer dye when recharging the system.

a. Flushing or changing he A/C oil is not necessary.

Copyright © 1998 Mitchell Repair Information Company, LLC
Monday, September 03, 2001 03:26PM

b. Small amounts of the tracer dye will be found in the Recovery / Recycling tank, if recovery is necessary.

TRACER DYE SUPPLIERS

TRACER DYE SUPPLIERS INFORMATION TABLE

Supplier	Available At	Part Number	Note
Spectronics Corporation Equivalent)	(800) 641-1133	- - -	Or Equivalent
Ford - Rotunda	See Dealer	112-R0027	Or Equivalent

REFRIGERANT/COMPRESSOR OIL

REFRIGERANT/COMPRESSOR OIL INFORMATION TABLE

Model	Model Year	Refrigerant	Compressor Oil Type
MX-6/626	1993 and prior	R12	ATMOS S150
	1994 and after	R134a	ATMOS GU10
Protege	1994 and prior	R12	ATMOS S150
	1995 and after	R134a	SP10
Miata	1993 and prior	R12	ND7
	1994 and after	R134a	ND9
RX-7	1994 and prior	R12	ND7
	1995 and after	R134a	ND9
MX-3	1993 and prior	R12	ATMOS S150
	1994 and after	R134a	ATMOS GU10
MPV	1993 and prior	R12	ND6
	1994 and after	R134a	ND8
Millenia	1995 and after	R134a	ATMOS GU10
929	1993 and prior	R12	ATMOS S150

USE OF A/C TRACER DYE SERVICE INFO CAT. U, NO. 008/97
Article Text (p. 3)

Copyright © 1998 Mitchell Repair Information Company, LLC
Monday, September 03, 2001 03:26PM

	1994 and after	R134a	ATMOS GU10
Navajo	1993 and prior	R12	ESHM2C31A2
	1994 and after	R134a	WSHM1C231B
B-Series	Built before Sep 20, 1993	R12	ESHM2C31A2
	Built after Sep 20, 1993	R134a	WSHM1C231B

END OF ARTICLE

USE OF R-12 REFRIGERANT SUBSTITUTES CAT. U, NO. 009/96
Article Text

Copyright © 1998 Mitchell Repair Information Company, LLC
Monday, September 03, 2001 03:26PM

ARTICLE BEGINNING

TECHNICAL SERVICE BULLETIN

USE OF R-12 REFRIGERANT SUBSTITUTES

Model(s): All Mazda Models
Category: U - Heater and Air Conditioning Systems
Bulletin No.: 009/96
Date: October 21, 1996

DESCRIPTION

Mazda Corporation does not approve of using substitute R-12 refrigerants when an A/C system requires charging. Use of these products may result in component damage and loss of warranty. If service is required on a vehicle with an R-12 system, use only new or known good recycled refrigerant.

NOTE: A/C systems designed to operate on R-134a can be recharged using only HFC-134a. Using R-12 substitutes may result in a hazardous condition and/or A/C component damage.

END OF ARTICLE

L4N71B TRANS OIL PRESSURE GAUGE ADAPTER CAT. 40, NO. 018/87
Article Text

Copyright © 1998 Mitchell Repair Information Company, LLC
Monday, August 27, 2001 06:39AM

ARTICLE BEGINNING

TECHNICAL SERVICE BULLETIN

OIL PRESSURE GAUGE ADAPTER

Model: 1983 - 1987 RX-7 A/T
Bulletin No.: 018/87
Date: 4/9/87
Category: 40

DESCRIPTION

An adaptor for the (4903 78 400A) oil pressure gauge has been newly established for 1983-87 RX7 with automatic transmission. This adaptor is necessary when checking line pressure in "R" range because of the limited space between the transmission and the body. (See the 1986-87 RX-7 Service Information.

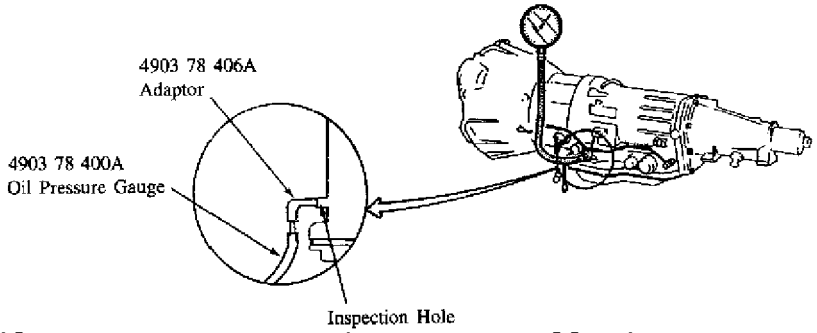

Fig. 1: Oil Pressure Gauge Adaptor Installation

PARTS INFORMATION

PART NUMBER	DESCRIPTION
4903 78 406A	Adaptor

END OF ARTICLE

PAINTING RUSTPROOF STEEL PANELS CAT. 14, NO. 070/89
Article Text

Copyright © 1998 Mitchell Repair Information Company, LLC
Monday, August 27, 2001 06:40AM

ARTICLE BEGINNING

TECHNICAL SERVICE BULLETIN

PAINTING RUSTPROOF STEEL PANELS

Model All Mazda Models
Category 14 Body
Bulletin No. 070/89
Date June 6, 1989

DESCRIPTION

When you repair and repaint the rustproof steel panels, zinc phosphate acid solution must be used in preparation of the surface finishing; otherwise, paint damage such as peeling off or blistering may result. Please refer to the following instructions for proper repairs of the rustproof steel panels.

REPAIR PROCEDURE

Painting Procedure of Rustproof Steel Panels

³ Sanding, grinding ÃÄÄÄÄÄ Conventional method
³
³ Degreasing ÃÄÄÄÄÄ Conventional method
³
³ Surface finishing ÃÄÄÄÄÄ Use zinc phosphate acid solution
³
³ Puttying, paintingÃÄÄÄÄÄ Conventional method

Location of the parts made of rustproof steel panels (see Fig. 1)

RUSTPROOF STEEL PANELS LOCATION TABLE

Part Name	Model Fig.	323 #1	323 #2	626 #3	RX-7 #4	RX-7 Conv #4	929 #5	MPV #6	B2200 B2600 #7
Engine Hood Outer Panel		**	**	**	**	**	**		**
Cowl Grille							*		
Front Fender Panel		**	**	**	*	*	**	*	**

PAINTING RUSTPROOF STEEL PANELS CAT. 14, NO. 070/89
Article Text (p. 2)

Copyright © 1998 Mitchell Repair Information Company, LLC
Monday, August 27, 2001 06:40AM

Front Door Outer Panel	**	**	**	**	**	**	**		*
Rear Door Outer Panel	**	**	**	**			**		
Side Sill Outer Panel	**	**	**	**	*	**	**	*	**
Rear Fender Panel	**	**	**	**	*	**	**	*	
Fuel Filler Lid	**	**	**	**	**	**	**		
Rear Crossmember				**				**	
Rear End Member or Extension								*	
Tailgate Outer Panel	*	*	*	**	**				
Trunk Lid Outer Panel	*	*	*	**		*	*	*	
Center Pillar Outer Pnl				**					
Front Pillar Outer Pnl									*
Side Gate									**
Tail Gate									*
Floor Panel									**

NOTE: Rustproof steel panels used: * **ÄÄÄÄ** One side only
** **ÄÄÄÄ** Both sides

PAINTING RUSTPROOF STEEL PANELS CAT. 14, NO. 070/89
Article Text (p. 3)

Copyright © 1998 Mitchell Repair Information Company, LLC
Monday, August 27, 2001 06:40AM

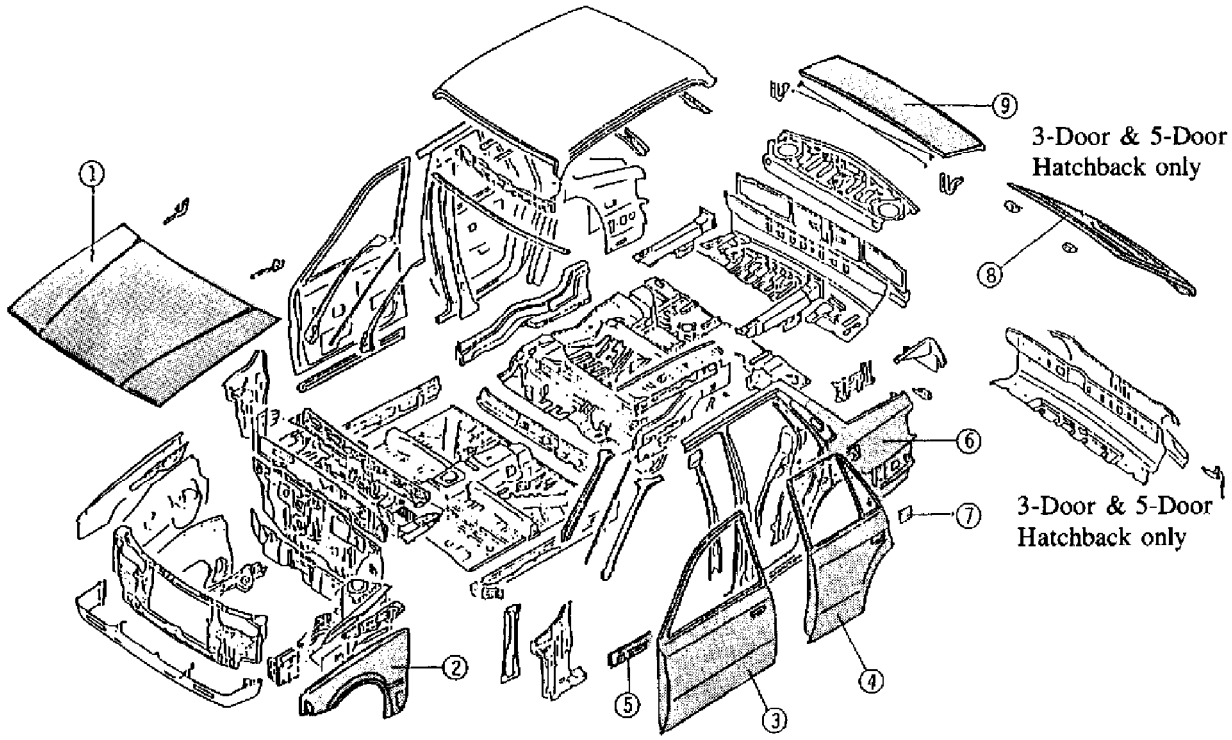

① ENGINE HOOD OUTER PANEL	⑥ REAR FENDER PANEL
② FRONT FENDER PANEL	⑦ FUEL FILLER LID
③ FRONT DOOR OUTER PANEL	⑧ LIFT GATE OUTER PANEL
④ REAR DOOR OUTER PANEL	⑨ TRUNK LID OUTER PANEL
⑤ SIDE SILL OUTER PANEL	

93F53491

Fig. 1: Location of Rustproof Steel Panels on 3 & 5-dr Hatchbacks

PAINTING RUSTPROOF STEEL PANELS CAT. 14, NO. 070/89
Article Text (p. 4)

Copyright © 1998 Mitchell Repair Information Company, LLC
Monday, August 27, 2001 06:40AM

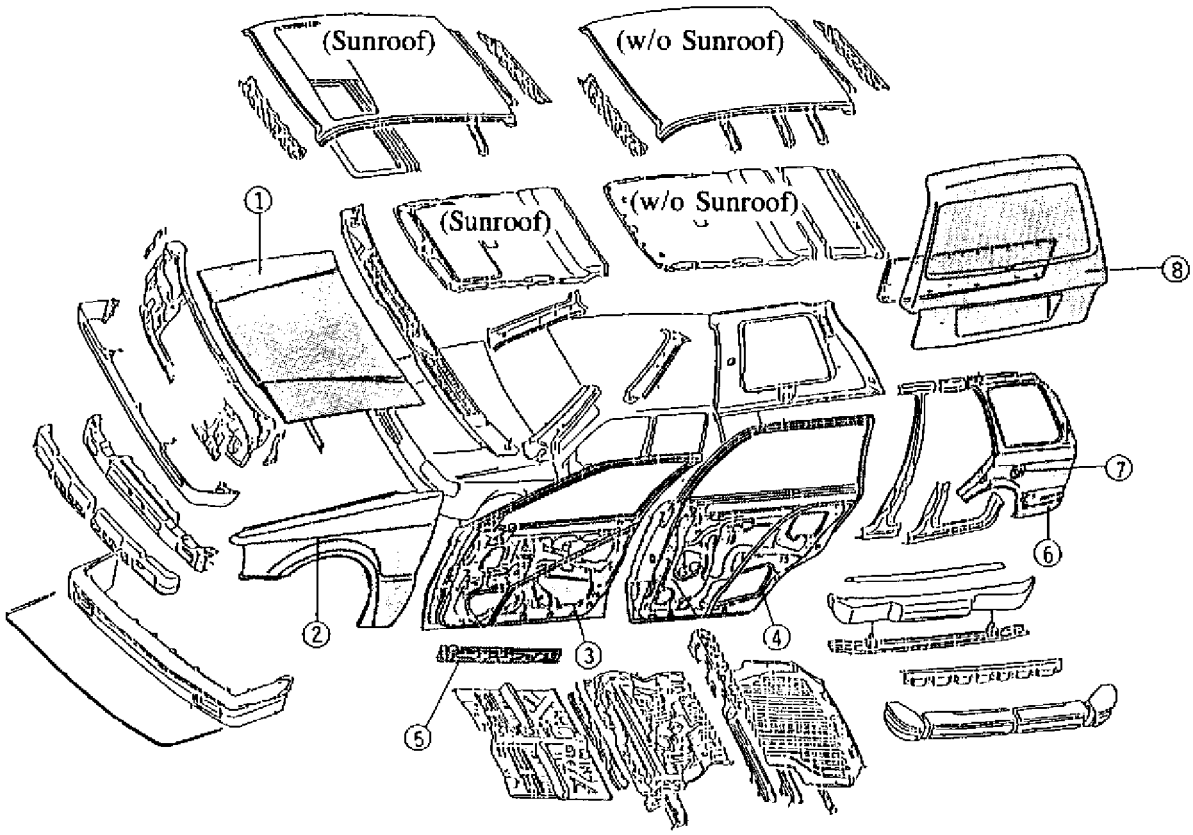

① ENGINE HOOD OUTER PANEL	⑤ SIDE SILL OUTER PANEL
② FRONT FENDER PANEL	⑥ REAR FENDER PANEL
③ FRONT DOOR OUTER PANEL	⑦ FUEL FILLER LID
④ REAR DOOR OUTER PANEL	⑧ LIFT GATE OUTER PANEL

93G53492

Fig. 2: Mazda 323 Wagon - Rustproof Body Panels

PAINTING RUSTPROOF STEEL PANELS CAT. 14, NO. 070/89
Article Text (p. 5)

Copyright © 1998 Mitchell Repair Information Company, LLC
Monday, August 27, 2001 06:40AM

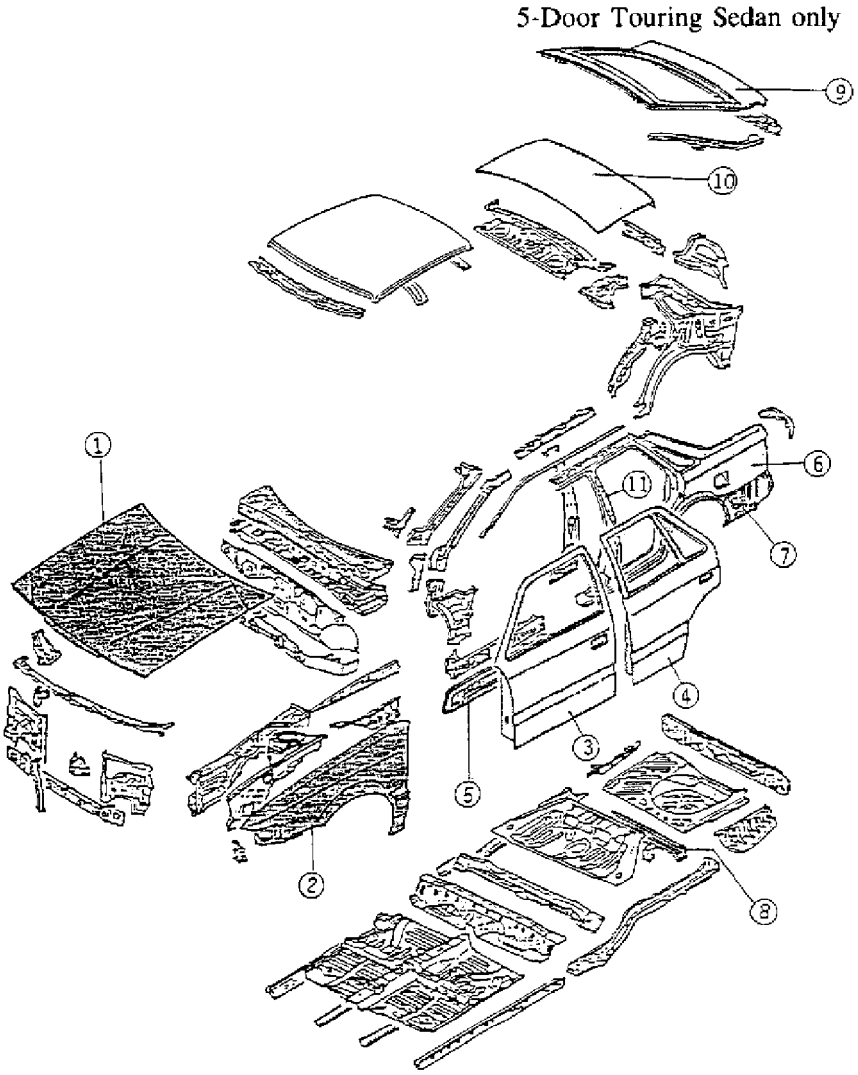

1 ENGINE HOOD OUTER PANEL	7 FUEL FILLER LID
2 FRONT FENDER PANEL	8 REAR CROSSMEMBER
3 FRONT DOOR OUTER PANEL	9 LIFT GATE OUTER PANEL
4 REAR DOOR OUTER PANEL	10 TRUNK LID OUTER PANEL
5 SIDE SILL OUTER PANEL	11 CENTER PILLAR OUTER PANEL
6 REAR FENDER PANEL	

93H53493

Fig. 3: Mazda 626/MX-6 - Rustproof Body Panels

PAINTING RUSTPROOF STEEL PANELS CAT. 14, NO. 070/89
Article Text (p. 6)

Copyright © 1998 Mitchell Repair Information Company, LLC
Monday, August 27, 2001 06:40AM

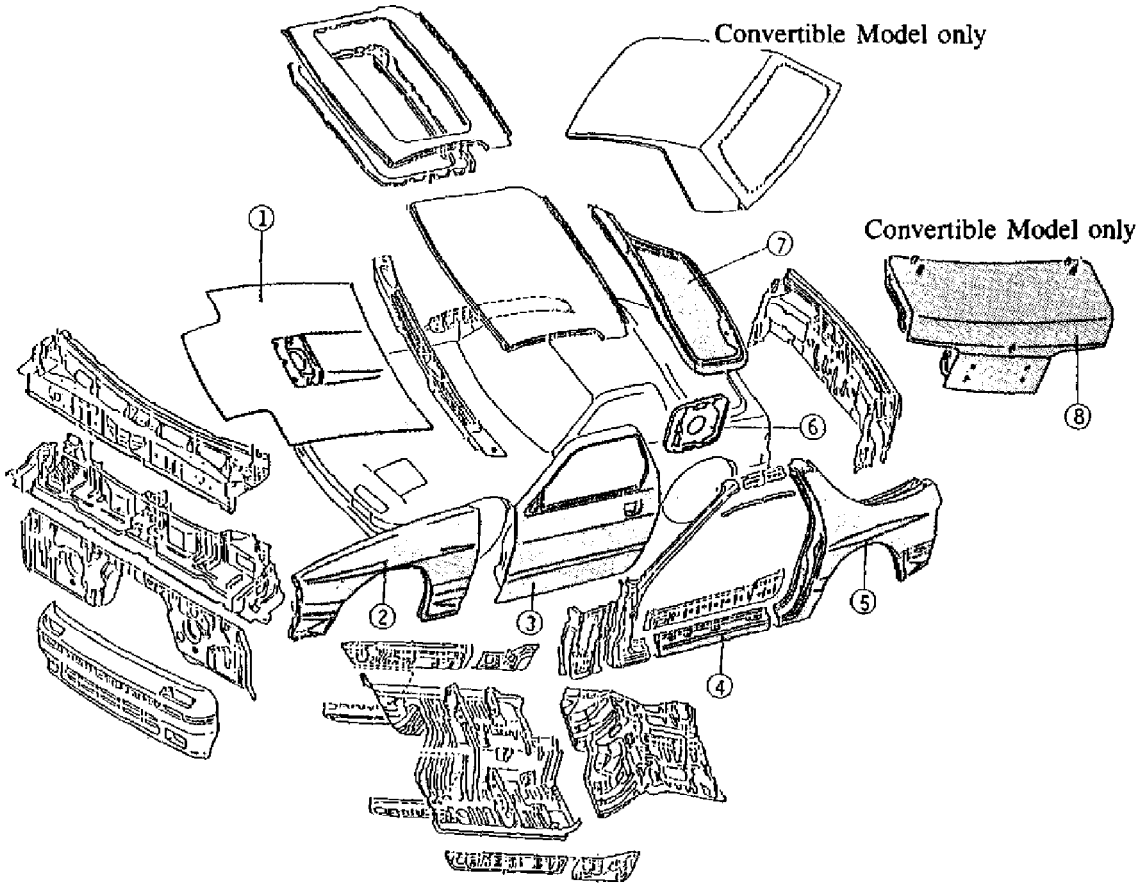

①ENGINE HOOD OUTER PANEL	⑤REAR FENDER PANEL
②FRONT FENDER PANEL	⑥FUEL FILLER LID
③FRONT DOOR OUTER PANEL	⑦LIFT GATE OUTER PANEL
④SIDE SILL OUTER PANEL	⑧TRUNK LID OUTER PANEL

93I53494

Fig. 4: Mazda RX-7 - Rustproof Body Panels

PAINTING RUSTPROOF STEEL PANELS CAT. 14, NO. 070/89
Article Text (p. 7)

Copyright © 1998 Mitchell Repair Information Company, LLC
Monday, August 27, 2001 06:40AM

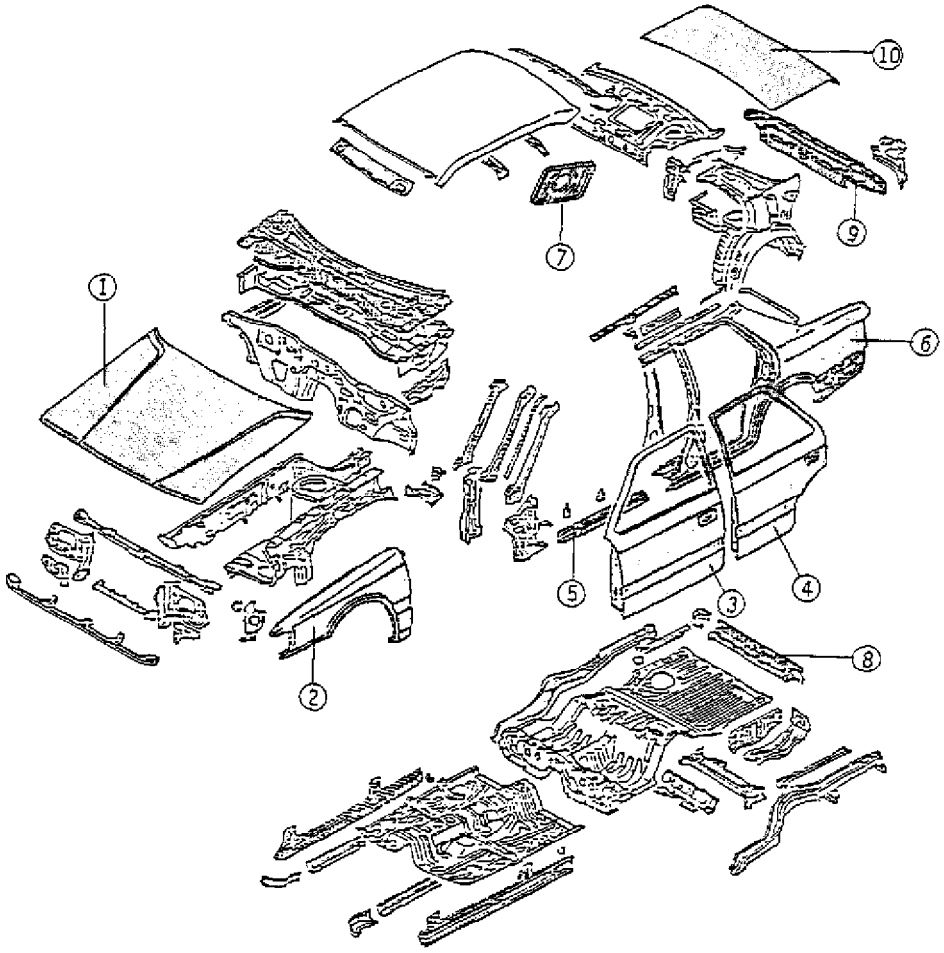

1 ENGINE HOOD OUTER PANEL	6 REAR FENDER PANEL
2 FRONT FENDER PANEL	7 FUEL FILLER LID
3 FRONT DOOR OUTER PANEL	8 REAR CROSSMEMBER
4 REAR DOOR OUTER PANEL	9 REAR END MEMBER
5 SIDE SILL OUTER PANEL	10 TRUNK LID OUTER PANEL

93J53495

Fig. 5: Mazda 929 - Rustproof Body Panels

Copyright © 1998 Mitchell Repair Information Company, LLC
Monday, August 27, 2001 06:40AM

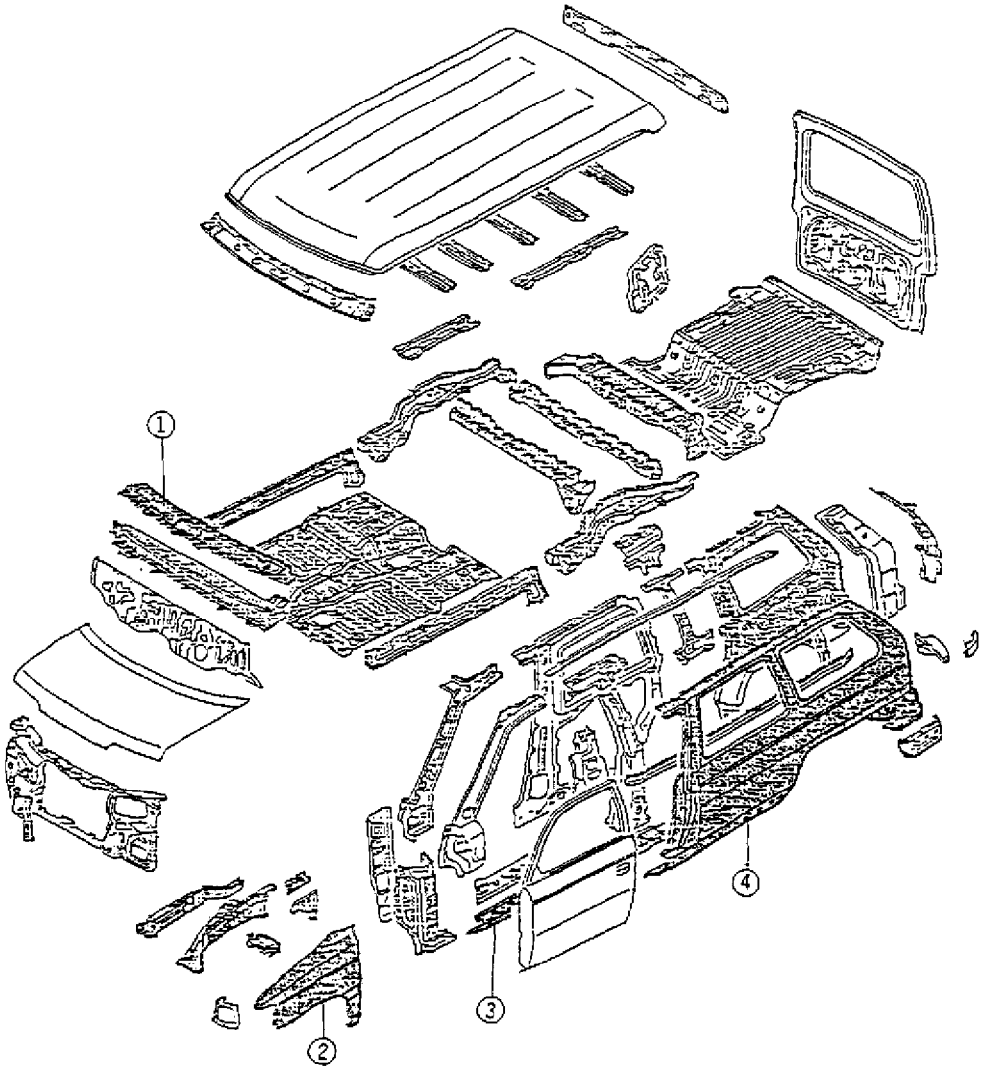

1 COWL GRILLE
2 FRONT FENDER PANEL
3 SIDE SILL OUTER PANEL
4 REAR FENDER PANEL

93A53496

Fig. 6: Mazda MPV - Rustproof Body Panels

PAINTING RUSTPROOF STEEL PANELS CAT. 14, NO. 070/89
Article Text (p. 9)

Copyright © 1998 Mitchell Repair Information Company, LLC
Monday, August 27, 2001 06:40AM

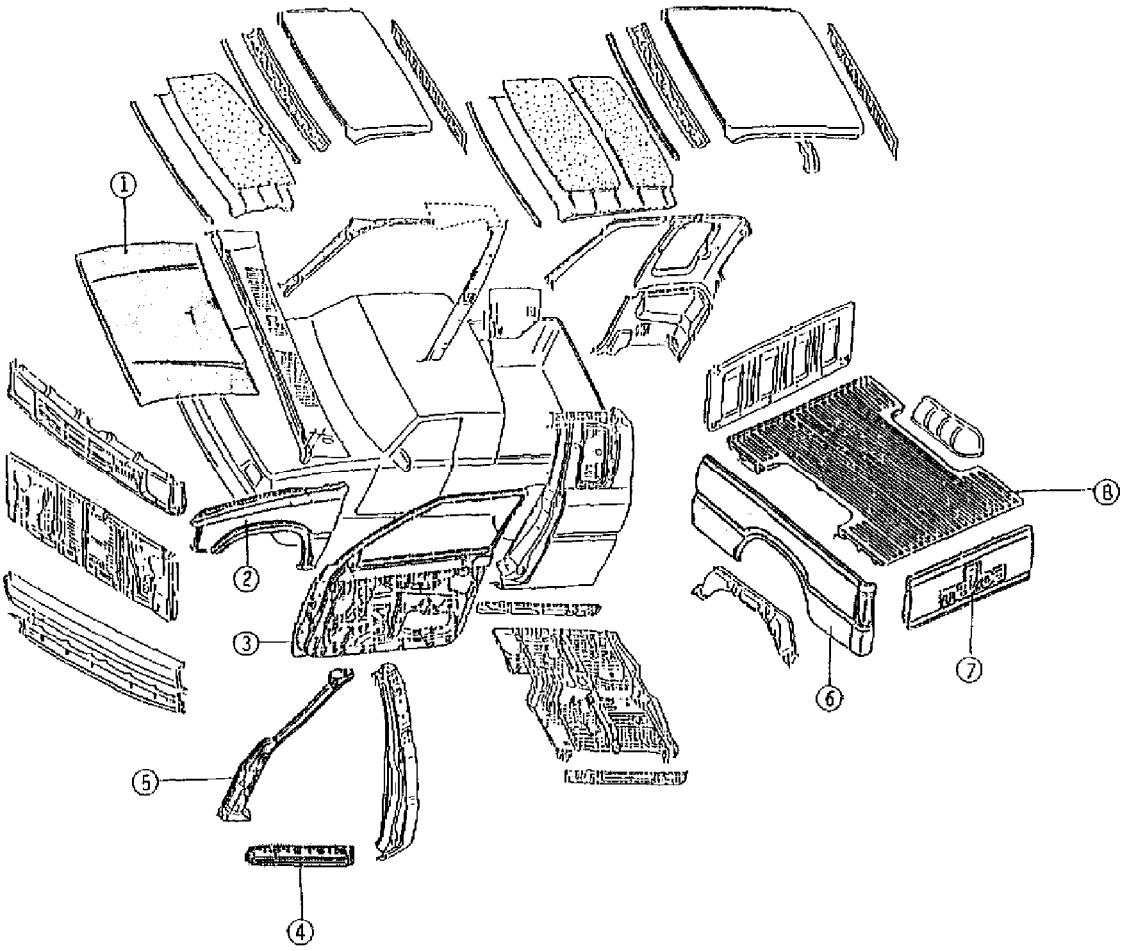

①ENGINE HOOD OUTER PANEL	⑤FRONT PILLAR OUTER PANEL
②FRONT FENDER PANEL	⑥SIDE GATE
③FRONT DOOR OUTER PANEL	⑦TAIL GATE
④SIDE SILL OUTER PANEL	⑧FLOOR PANEL

93B53497

Fig. 7: Mazda "B" Series - Rustproof Body Panels

END OF ARTICLE

STATIC ELECTRICITY SHOCK WHEN EXITING VEHICLE CAT. 14, NO. 067/89
Article Text

Copyright © 1998 Mitchell Repair Information Company, LLC
Monday, August 27, 2001 06:41AM

ARTICLE BEGINNING

TECHNICAL SERVICE BULLETIN

STATIC ELECTRICITY SHOCK

Model All Mazda Models
Category 14, Body
Bulletin No. 067/89
Date March 29, 1989

DESCRIPTION

Drivers or passengers may occasionally feel static electricity shock when they touch the door after getting out of the vehicle.

If you encounter the customer complaint on the above condition, spray anti-static agent to the surface of the seat cushion and back trim.

The following anti-static agents are recommended for static electricity shock on Mazda vehicles.

RECOMMENDED ANTI-STATIC PRODUCTS

Manufacturer	Product
Tech Spray	Anti-stat
National System Corporation	anti-stat
ACL Incorporated	Staticide
Chemtronics Inc.	Static Free

NOTE: Before using the spray, carefully read the instructions of each product.

END OF ARTICLE

WHISTLE NOISE FROM CHECK &CUT VALVES - REPL VALVES CAT. 4, NO. 015/85
Article Text

Copyright © 1998 Mitchell Repair Information Company, LLC
Monday, August 27, 2001 06:41AM

ARTICLE BEGINNING

TECHNICAL SERVICE BULLETIN

APPLICATION

1980-85 RX7 & 1981-85 GLC

SUBJECT

Whistle Noise From Check & Cut Valve

REFERENCE

Mazda Motors Corp., Service Bulletin, No. 4 015/85, September, 1985

CONDITION & CAUSE

Some 1980-85 RX7 and 1981-85 GLC vehicles may exhibit a whistle noise from the check and cut valve. The whistle noise is most noticeable at high temperature and low fuel level, and can be heard from the rear of the vehicle.

REPAIR

Replace the check and cut valve with the new service component (RX7 - 8341-42-910, GLC - BA01-42-910).

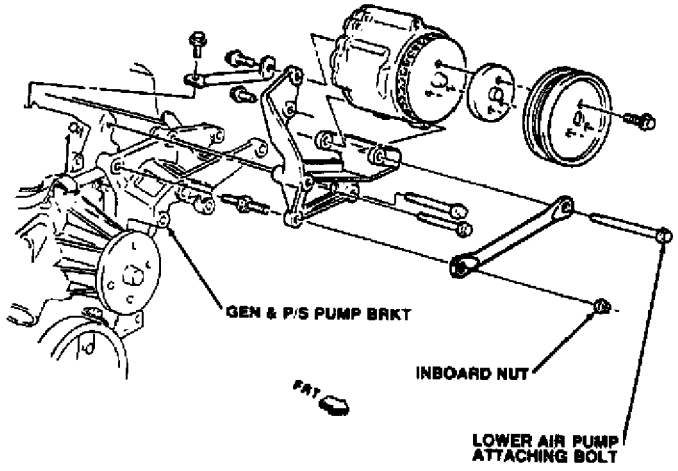

Fig. 1: Anything Installation

END OF ARTICLE

WIND NOISE AROUND DOORS CAT. S, NO. 018/98
Article Text

Copyright © 1998 Mitchell Repair Information Company, LLC
Monday, September 03, 2001 03:34PM

ARTICLE BEGINNING

TECHNICAL SERVICE BULLETIN

WIND NOISE AROUND DOORS

Model(s): All Mazda models except MX-5 Miata and MX-6
Category: S (09) - Body
Bulletin No.: 018/98
Date: July 29, 1998

DESCRIPTION

Wind noise around doors may occur with some vehicles. This may be caused by the door weather-strip seal.

Customers complaining of this should have their vehicle inspected and repaired according to this service bulletin.

REPAIR PROCEDURE

1. Verify customer complaint.

2. Examine weather-strip for the following conditions:

   a. Rips, tears, cuts

   b. Loose or falling off

   c. Excessive deterioration

      - If the weather-strip has any of the above conditions, replace it. Go to step 3.

      - If weather-strip does not have any of the above conditions, but wind noise still exists, proceed to the CARD TEST.

CARD TEST

1. Open the door and insert a business card (0.2 mm thickness) between the door and the weather-strip at the base of the A-pillar. Close the door. See Fig. 1.

2. Slide the business card up along the A-pillar. See Fig. 1.

   a. If the card slides easily at any location along the A-pillar, the sealing contact between the door is insufficient and requires adjustment. Proceed to DOOR ADJUSTMENT.

   b. If there is consistent resistance, proceed to the WHITE GREASE TEST.

WIND NOISE AROUND DOORS CAT. S, NO. 018/98
Article Text (p. 2)

Copyright © 1998 Mitchell Repair Information Company, LLC
Monday, September 03, 2001 03:34PM

NOTE: The card test can only be used to evaluate the A-pillar sealing contact. Use the following WHITE GREASE TEST to evaluate the rest of the weather-strip.

WHITE GREASE TEST

1. Roll down windows and adequately cover all interior surfaces to prevent contact with grease.

2. Thoroughly and evenly spray the sheet metal surface of the body that seals against the weather-strip on the door.

NOTE:

* It is recommended that you use KAR Products #78620 "Multi-purpose white grease (aerosol spray)" or equivalent.

* DO NOT spray the weather-strip.

3. Using only the door handle, very gently close the door. This will prevent over-slam which could result in an inaccurate reading.

4. Open the door and measure the width of the grease pattern that is left along the length of the weather-strip (check for any unevenness in width). See Fig. 2.

   a. If 4 mm or more, sealing contact is adequate if door closing effort is acceptable. Clean grease from vehicle.

   b. If 3 mm or less, sealing contact is insufficient. Clean grease from vehicle and proceed to DOOR ADJUSTMENT.

DOOR ADJUSTMENT

The door should be adjusted to obtain the proper seal compression while maintaining proper door alignment. The hinges control the in/out location of the door at the front as well as overall tip or tilt of the door when viewed from the front or rear. The door striker controls the in/out location of the door at the rear latch.

CAUTION: DO NOT pry or force the door into alignment.

In addition to Workshop Manual procedures for door alignment, the following information tips are provided

* As a guideline, if the weather-strip contact is insufficient, the door hinge(s) should be adjusted 2-4 mm inward. Determine the amount of movement by outlining the hinge mount area before door adjustment and after. See Fig. 3.

* Adjusting one hinge at a time will prevent any extreme door

Copyright © 1998 Mitchell Repair Information Company, LLC
Monday, September 03, 2001 03:34PM

movement. This is done by loosening the hinge bolts and moving the door with a padded pry bar just enough to permit movement of the door.

* Hinges should be adjusted first, followed by the striker.

* Adjustment to the rear door(s), if applicable, may require adjustments to the front door and possibly to the front fender to maintain alignment.

* Door closing effort should be checked to ensure that it remains acceptable after adjustments are completed. If any doors are too difficult to close, the seal compression may be excessive and adjustment will need to be repeated.

* After completing adjustments, verify seal compression by using the card test and white grease test.

3. Verify repair.

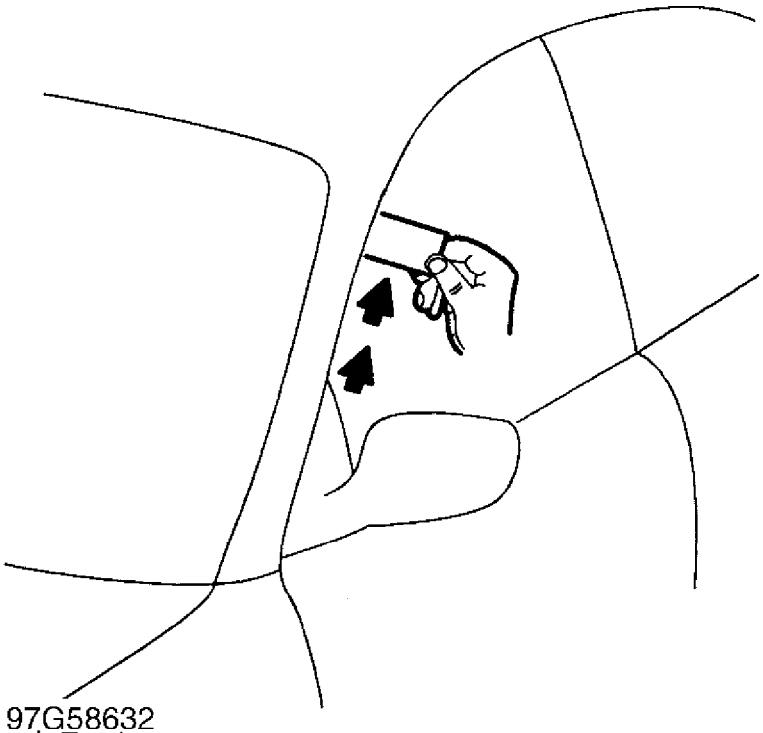

Fig. 1: Card Test

Copyright © 1998 Mitchell Repair Information Company, LLC
Monday, September 03, 2001 03:34PM

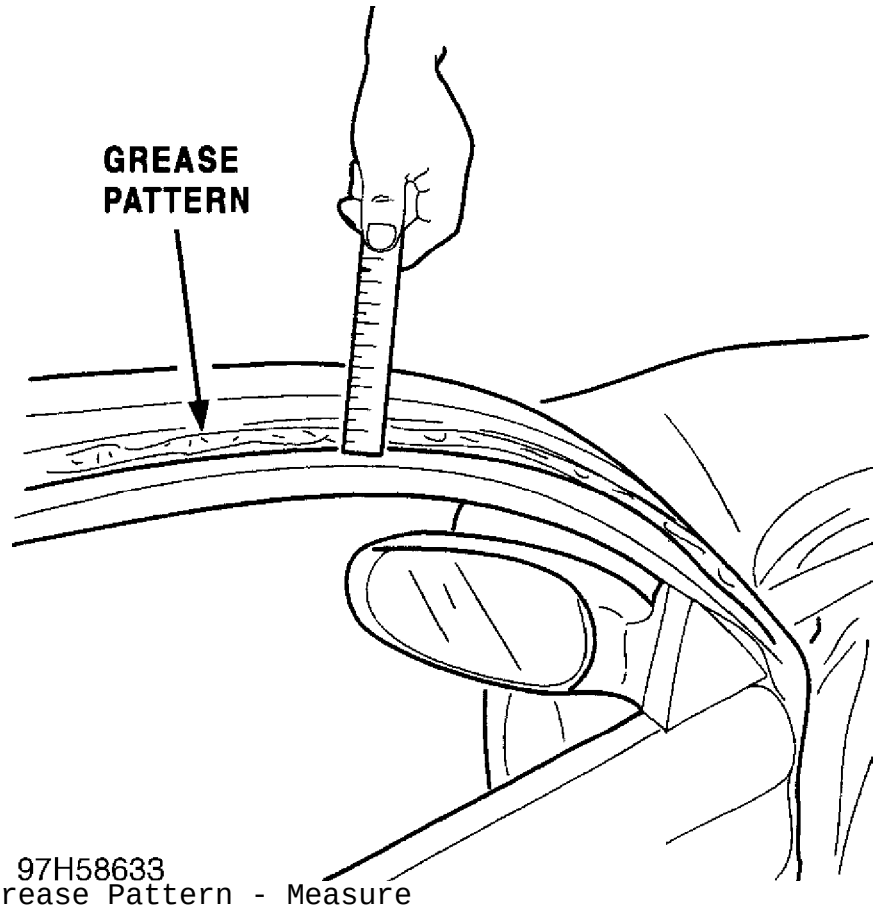

Fig. 2: Grease Pattern - Measure

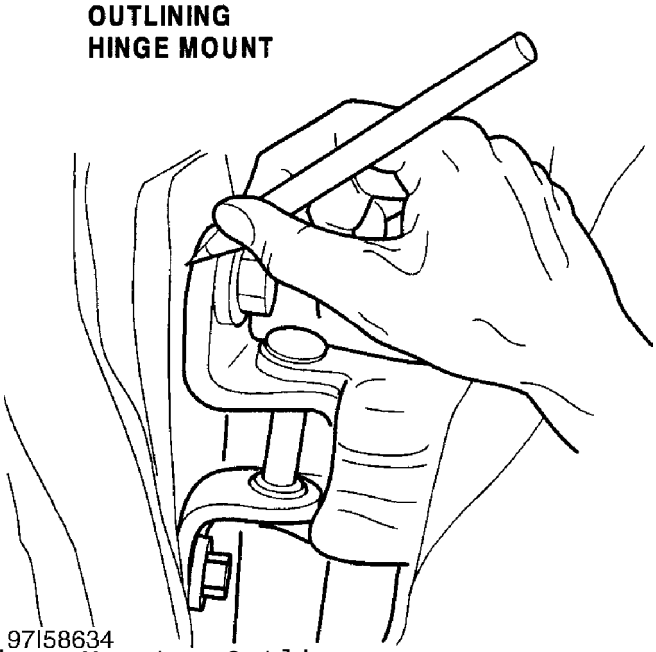

Fig. 3: Hinge Mount - Outline

END OF ARTICLE

WINDSHIELD STONE CHIPPING INSPECTION CAT. S, NO. 037/96
Article Text

Copyright © 1998 Mitchell Repair Information Company, LLC
Monday, September 03, 2001 03:33PM

ARTICLE BEGINNING

TECHNICAL SERVICE BULLETIN

WINDSHIELD STONE CHIPPING INSPECTION

Model(S): All Mazda Models
Category: S - Body
Bulletin No.: 037/96
Date: August 10, 1996

DESCRIPTION

Windshield cracks caused by stone chips are not covered under the new vehicle warranty. Service Advisers and Service Managers should review the criteria below for addressing customer complaints regarding cracked windshields. If possible, customers should be present when the inspection is performed.

INSPECTION PROCEDURE

1. Visually inspect the length of the crack and the windshield molding for signs of stone contact.

2. Trace the length of the crack with a needle or small nail to determine chipping location.

IMPORTANT

Windshield replacement is not warrantable if a chip larger than 1 mm in diameter exists along the length of the crack.

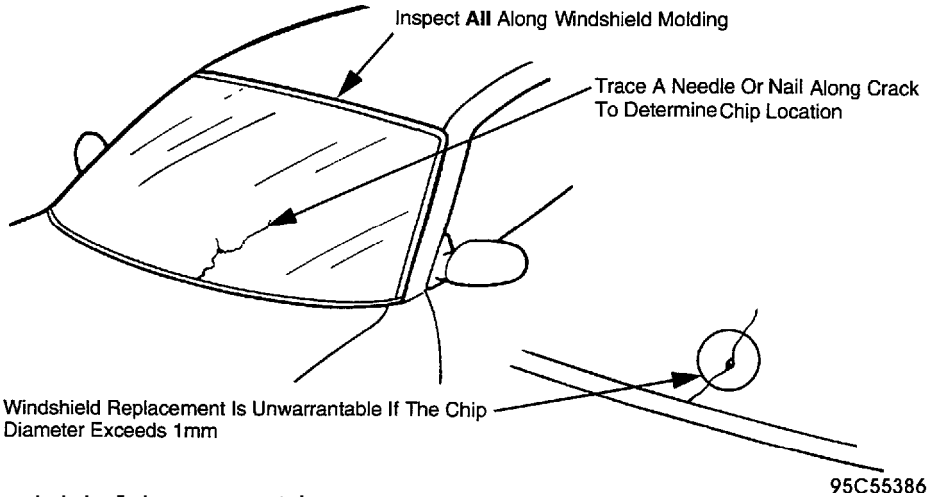

Fig. 1: Windshield Inspection

BRAKE CALIPER BOLT CORROSION - CLEAN & SEAL MT 0995-11
Article Text

Copyright © 1998 Mitchell Repair Information Company, LLC
Monday, September 03, 2001 03:36PM

ARTICLE BEGINNING

TECHNICAL SERVICE BULLETIN

BRAKE CALIPER BOLTS

Model(s): All Mazda Models
Category: Mazda Tips
Bulletin No.: MT 0995-11
Date: 1995

DESCRIPTION

When reinstalling disk brake calipers, use the following procedure to secure the caliper bolts and seal against road corrosion. When installing caliper mounting bolts, first clean the bolt threads of any old residue. Be sure to clean out the female portion as well, using a wire brush, brake cleaner and an air hose. When parts are dry apply 3-4 drops of Loctite Threadlocking Adhesive/Sealant 272 (Loctite part number 27200) on the male threads, one full thread back from the lead thread. Assemble and torque to specification in less than 5-8 minutes.

END OF ARTICLE

BRAKE JUDDER REPAIR (CANADIAN) CAT. P, NO. 94-06
Article Text

Copyright © 1998 Mitchell Repair Information Company, LLC
Monday, September 03, 2001 03:36PM

ARTICLE BEGINNING

TECHNICAL SERVICE BULLETIN

BRAKE JUDDER REPAIR

Model(s): 1983-95 Mazda Vehicles (Canadian)
Category: P - Brakes
Bulletin No.: 95-02
Date: May, 1995

NOTE: This bulletin supersedes Service Bulletin Cat. P, No. 94-06.

DESCRIPTION

Customers who complain of vibration or pulsation in the steering wheel, brake pedal, floor or seat while applying the brakes may be experiencing symptoms of brake judder. Judder is caused by:

* Disk Thickness Variation (DTV)
* rotor run-out and/or
* rotor surface rust (which leads to DTV)

This bulletin describes the causes and corrections for each condition.

CAUSES OF JUDDER

1. Disc Thickness Variation (DTV) - DTV creates a vibration/pulsation during application of the brakes. DTV will increase with distance travelled if the run-out of the disc is excessive.

2. Disc Rotor Run-Out - Run-out, or rotor "wobble", leads to DTV. It is corrected by precision machining to bring the run-out within specification.

3. Rotor Surface Rust - Under certain conditions (storage or use in extreme environments), the surface of the brake rotors may become rusted in the pad non-contact area. If this corrosion penetrates the rotor surface deeply enough, it will not wear or rub off during normal use. This will cause DTV.

CORRECTION

In order to effectively correct brake judder, rotor surfaces must be precisely machined. Mazda Canada Inc., has evaluated both on and off-car brake lathes and has determined that on-car lathes are more precise and greatly reduces comeback repairs.

The steps necessary for correction of brake judder are as follows:

BRAKE JUDDER REPAIR (CANADIAN) CAT. P, NO. 94-06
Article Text (p. 2)

Copyright © 1998 Mitchell Repair Information Company, LLC
Monday, September 03, 2001 03:36PM

1. If the vehicle is in dealer inventory and the condition is rotor rust:

   A. Clean the rotor surface by driving the vehicle several miles while frequently applying the brakes.

   B. If vibration/pulsation is still felt, processed to step "C".

   C. Machine the rotor surface enough to remove all rust or surface staining (generally 0.1 mm per side).

NOTE: If machining is performed, the Service Manager's signature must appear on the repair order.

2. If the vehicle has been in service:

   A. Verify customer's complaint with a test drive.

   B. If brake judder is felt, proceed to step "C". If brake judder is not felt, refer to the work shop manual or the NVH manual for additional troubleshooting information.

   C. Mark the front wheel(s) and the lug nut stud with chalk. This will determine the original position of the wheel to the rotor. Remove the front wheel(s).

NOTE: A high majority of brake judder is due to DTV of the front rotors. Customer complaints of brake judder are most often corrected by machining the front rotors only.

   D. Measure the remaining front rotor thickness and run-out. Determine if sufficient rotor material remains to allow machining.
   Limit: Stated minimum thickness for the model plus 0.8 mm.

   E. If machining can be achieved, an on-car brake lathe is recommended to ensure a precise rotor surface.

NOTE: After machining rotor(s) with an on-car brake lathe, you must remove all metal cuttings (particles) from the ABS "toothed ring" (the reluctor) and the ABS sensor. Failure to remove these particles will prevent proper function of the ABS system.

   F. If machining can not be achieved due to rotor thickness limitations, the dealer should replace the rotor. To ensure a successful repair, run-out and/or DTV must be removed by on-car machining, even on new rotor(s).

   G. Install the wheel in the same location relative to the hub as it was originally positioned.

BRAKE JUDDER REPAIR (CANADIAN) CAT. P, NO. 94-06
Article Text (p. 3)

Copyright © 1998 Mitchell Repair Information Company, LLC
Monday, September 03, 2001 03:36PM

H. Torque wheel lug nuts to the specifications in the service manual.

I. Test drive the vehicle to confirm repair.

J. If the brake judder is still felt, correct the rear rotor(s) using steps "C" through "I".

SERVICE TOOLS

The Accu-Turn (model 8750) On-Car Brake Lathe is recommended by Mazda. The brake lathe is available through Mazda Canada's Equipment Program at 1-800-33-6687.

WARRANTY INFORMATION

(Applies To Vehicles Covered Under Normal Warranty.)

Warranty Type:	O
Symptom Code:	83
Damage Code:	9B
Part Number Main Cause:	**** 33 25 * **** 26 25 * (Rear of Vehicle - Rear Wheel Drive Only)
Operation Number:	P0113AMX/0.7 hrs. (Front/One Side) P0113BMX/1.2 hrs. (Front/Both Sides) P0214AMX/0.7 hrs. (Rear/One Side) P0214BMX/1.2 hrs. (Rear/Both Sides)

NOTE:
1. Unnecessary replacement of rotors will result in warranty claim denial.
2. Brake pad replacement costs will not be warrantable for brake judder repair.
3. The 1995 SRT Microfiche (for the MX-3, RX-7, 929, MPV, Miata, etc.) shows labor times for on-car rotor machining are 0.7 hrs. Max for one side, and 1.2 hrs. Max for both sides.
4. If an Accu-Turn on-car lathe is used, apply the labor time from the table above. If an off-car lathe is used, refer to the labor times from the 1994 SRT. The next issue of the SRT microfiche will be revised to show the new labor times.
5. Please refer to the attached sheet for all valid off-car brake and on-car brake machining operation codes for all models and model years.

END OF ARTICLE

VIBRATION/PULSATION WHILE BRAKING - PROCEDURE CAT. P, NO. 001/95
Article Text

Copyright © 1998 Mitchell Repair Information Company, LLC
Monday, September 03, 2001 03:36PM

ARTICLE BEGINNING

TECHNICAL SERVICE BULLETIN

BRAKE JUDDER REPAIR

Model(s): All Mazda Models Through 1995
Category: P
Bulletin No.: 001/95
Date: April, 27 1995

NOTE: This bulletin replaces Service Bulletin Cat. P, 006/94 dated Sept. 1994.

DESCRIPTION

Customers who complain of vibration or pulsation in the steering wheel, brake pedal, floor or seat while applying the brakes may be experiencing symptoms of brake judder. Judder is caused by:

* Disk Thickness Variation (DTV)
* rotor run-out and/or
* rotor surface rust (which leads to DTV)

This bulletin describes the causes and corrections for each condition.

CAUSES OF JUDDER

1. Disc Thickness Variation (DTV) - DTV creates a vibration/pulsation during application of the brakes. DTV will increase with mileage accumulation if the run-out of the disc is excessive.

2. Disc Rotor Run-Out - Run-out, or rotor "wobble", leads to DTV. It is corrected by precision machining to bring the run-out within specification.

3. Rotor Surface Rust - Under certain conditions (storage or use in extreme environments), the surface of the brake rotors may become rusted in the pad non-contact area. If this I corrosion penetrates the rotor surface deeply enough, it will not wear or rub off during normal use. This will cause DTV.

CORRECTION

In order to effectively correct brake judder, rotor surfaces must be precisely machined. Mazda has evaluated both on and off-car brake lathes and has determined that on-car lathes are more precise and greatly reduces comeback repairs.

The steps necessary for correction of brake judder are as follows:

VIBRATION/PULSATION WHILE BRAKING - PROCEDURE CAT. P, NO. 001/95
Article Text (p. 2)

Copyright © 1998 Mitchell Repair Information Company, LLC
Monday, September 03, 2001 03:36PM

1. If the vehicle is in dealer inventory and the condition is rotor rust:

    a. Clean the rotor surface by driving the vehicle several miles while frequently applying the brakes.
    b. If vibration/pulsation is still felt, processed to step "c".
    c. Machine the rotor surface enough to remove all rust or surface staining (generally 0.1 mm per side).

NOTE: If machining is performed, the Service Manager's signature must appear on the repair order.

2. If the vehicle has been in service:

    a. Verify customer's complaint with a test drive.
    b. If brake judder is felt, proceed to step c. If brake judder is not felt, refer to the work shop manual or the NVH manual for additional troubleshooting information.
    c. Mark the front wheel(s) and the lug nut stud with chalk. This will determine the original position of the wheel to the rotor. Remove the front wheel(s).

NOTE: A high majority of brake judder is due to DTV of the front rotors. Customer complaints of brake judder are most often corrected by machining the front rotors only.

    d. Measure the remaining front rotor thickness and run-out. Determine if sufficient rotor material remains to allow machining. Limit: Stated minimum thickness for the model plus 0.8 mm.
    e. If machining can be achieved, an on-car brake lathe is recommended and will be required for all warranty repairs after January 1, 1995 to ensure a precise rotor surface.

NOTE: After machining rotor(s) with an on-car brake lathe, you must remove all metal cuttings (particles) from the ABS "toothed ring" (the reluctor) and the ABS sensor. Failure to remove these particles will prevent proper function of the ABS system.

    f. If machining can not be achieved due to rotor thickness limitations, the dealer should replace the rotor. To ensure a successful repair, run-out and/or DTV must be removed by on-car machining, even on new rotor(s).
    g. Install the wheel in the same location relative to the hub as it was originally positioned.
    h. Torque wheel lug nuts to the specifications in the service manual.
    i. Test drive the vehicle to confirm repair.
    j. If the brake judder is still felt, correct the rear rotor(s) using steps "c" through "i".

VIBRATION/PULSATION WHILE BRAKING - PROCEDURE CAT. P, NO. 001/95
Article Text (p. 3)

Copyright © 1998 Mitchell Repair Information Company, LLC
Monday, September 03, 2001 03:36PM

SERVICE TOOLS

The Accu-Tum (model 8750) On-Car Brake Lathe is recommended by Mazda. The brake lathe will be available soon from MMA's National Accounts Program at a substantial savings. When the national account is established, a Special Tools Service Bulletin will be released which will combine further details. However, if you wish to receive a brochure on this brake lathe, please call Accu-Turn at (800) 551-2228.

WARRANTY INFORMATION

(Applies To Vehicles Covered Under Normal Warranty.)

Warranty Type:	A
Symptom Code:	83
Damage Code:	9B
Part Number Main Cause:	**** 33 25 **** 26 25 (Rear of Vehicle - Rear Wheel Drive Only)
Operation Number:	P0113AMX/0.7 hrs. (Front/One Side) P0113BMX/1.2 hrs. (Front/Both Sides) P0214AMX/0.7 hrs. (Rear/One Side) P0214BMX/1.2 hrs. (Rear/Both Sides)

NOTE:
1. Unnecessary replacement of rotors will result in warranty claim denial.
2. Brake pad replacement costs will not be warrantable for brake judder repair.
3. If an on-car lathe is used, apply the labor time from the table above.

NOTE: Warranty policy does not permit using an off-car brake lathe after January 1, 1995. The next issue of the SRT microfiche will be revised to show new labor times.

BRAKE DRUMS LABOR OPERATION/TIME CODES - 1993-1995 MODELS

626/MX-6
- Rear Brakes/Brake Drums(s), R&R (one side)
  - Labor Operation: P0201ARX/0.3 hrs.
- Rear Brakes/Brake Drums(s), R&R (both sides)
  - Labor Operation: P0201BRX/0.4 hrs.
- Brake Drum(s), Machine (one side)
  - Labor Operation: P0201AMX/0.5 hrs.
- Brake Drum(s), Machine (both sides)
  - Labor Operation: P0201AMX/0.7 hrs.
- Brake Shoe(s), R&R (one side)
  - Labor Operation: P0204ARX/0.4 hrs.
- Brake Shoe(s), R&R (both sides)

Copyright © 1998 Mitchell Repair Information Company, LLC
Monday, September 03, 2001 03:37PM

Labor Operation: P0204BRX/0.6 hrs.

MPV (1993 Models only)
Rear Brakes/Brake Drums(s), R&R (one side)
Labor Operation: P0201ARX/0.3 hrs.
Rear Brakes/Brake Drums(s), R&R (both sides)
Labor Operation: P0201BRX/0.6 hrs.
Brake Drum(s), Machine (one side)
Labor Operation: P0201AMX/0.3 hrs.
Brake Drum(s), Machine (both sides)
Labor Operation: P0201AMX/0.6 hrs.
Brake Shoe(s), R&R (one side)
Labor Operation: P0204ARX/0.5 hrs.
Brake Shoe(s), R&R (both sides)
Labor Operation: P0204BRX/0.8 hrs.

323/PROTEGE
Rear Brakes/Brake Drums(s), R&R (one side)
Labor Operation: P0201ARX/0.3 hrs.
Rear Brakes/Brake Drums(s), R&R (both sides)
Labor Operation: P0201BRX/0.6 hrs. (1993-94)
Labor Operation: P0201BRX/0.3 hrs. (1995)
Brake Drum(s), Machine (one side)
Labor Operation: P0201AMX/0.3 hrs.
Brake Drum(s), Machine (both sides)
Labor Operation: P0201AMX/0.6 hrs.
Brake Shoe(s), R&R (one side)
Labor Operation: P0204ARX/0.5 hrs. (1993-94)
Labor Operation: P0204ARX/0.3 hrs. (1995)
Brake Shoe(s), R&R (both sides)
Labor Operation: P0204BRX/0.8 hrs. (1993-94)
Labor Operation: P0204BRX/0.5 hrs. (1995)

MX-3
Rear Brakes/Brake Drums(s), R&R (one side)
Labor Operation: P0201ARX/0.3 hrs.
Rear Brakes/Brake Drums(s), R&R (both sides)
Labor Operation: P0201BRX/0.4 hrs.
Brake Drum(s), Machine (one side)
Labor Operation: P0201AMX/0.3 hrs.
Brake Drum(s), Machine (both sides)
Labor Operation: P0201AMX/0.6 hrs.
Brake Shoe(s), R&R (one side)
Labor Operation: P0204ARX/0.4 hrs.
Brake Shoe(s), R&R (both sides)
Labor Operation: P0204BRX/0.6 hrs.

93 B-Series and earlier
Rear Brakes/Brake Drums(s), R&R (one side)
Labor Operation: P0201ARX/0.3 hrs.
Rear Brakes/Brake Drums(s), R&R (both sides)
Labor Operation: P0201BRX/0.6 hrs.

Copyright © 1998 Mitchell Repair Information Company, LLC
Monday, September 03, 2001 03:37PM

Brake Drum(s), Machine (one side)
Labor Operation: P0201AMX/0.8 hrs.
Brake Drum(s), Machine (both sides)
Labor Operation: P0201AMX/1.3 hrs.
Brake Shoe(s), R&R (one side)
Labor Operation: P0204ARX/0.7 hrs.
Brake Shoe(s), R&R (both sides)
Labor Operation: P0204BRX/1.0 hrs.

Navajo
Rear Brakes/Brake Drums(s), R&R (one side)
Labor Operation: P0201ARX/0.5 hrs.
Rear Brakes/Brake Drums(s), R&R (both sides)
Labor Operation: P0201BRX/0.7 hrs.
Brake Drum(s), Machine (one side)
Labor Operation: P0201AMX/0.2 hrs.
Brake Drum(s), Machine (both sides)
Labor Operation: P0201AMX/0.4 hrs.
Brake Shoe(s), R&R (one side)
Labor Operation: P0204XRX/1.0 hrs.
Brake Shoe(s), R&R (both sides)
Labor Operation: P0204XRX/1.0 hrs.

94 B-Series and later
Rear Brakes/Brake Drums(s), R&R (one side)
Labor Operation: P0201ARX/0.4 hrs.
Rear Brakes/Brake Drums(s), R&R (both sides)
Labor Operation: P0201BRX/0.6 hrs.
Brake Drum(s), Machine (one side)
Labor Operation: P0201AMX/0.2 hrs.
Brake Drum(s), Machine (both sides)
Labor Operation: P0201AMX/0.4 hrs.
Brake Shoe(s), R&R (one side)
Labor Operation: P0204XRX/1.0 hrs.
Brake Shoe(s), R&R (both sides)
Labor Operation: P0204XRX/1.0 hrs.

REAR DISC BRAKES LABOR OPERATION/TIME CODES - 1993-1995 MODELS

Millenia
Rear Brakes/Disc Plate(s), R&R (one side)
Labor Operation: P0208ARX/0.3 hrs.
Rear Brakes/Disc Plate(s), R&R (both sides)
Labor Operation: P0208BRX/0.4 hrs.
Rear Brakes/Disc Plate(s), Machine on vehicle (one sides)
Labor Operation: P0214AMX/0.7 hrs.
Rear Brakes/Disc Plate(s), Machine on vehicle (both sides)
Labor Operation: P0214BMX/1.2 hrs.
Rear Brakes/Pad(s), R&R (one sides)
Labor Operation: P0209ARX/0.3 hrs.
Rear Brakes/Pad(s), R&R (both sides)
Labor Operation: P0214BRX/0.5 hrs.

VIBRATION/PULSATION WHILE BRAKING - PROCEDURE CAT. P, NO. 001/95
Article Text (p. 6)

Copyright © 1998 Mitchell Repair Information Company, LLC
Monday, September 03, 2001 03:37PM

626/MX-6
  Rear Brakes/Disc Plate(s), R&R (one side)
    Labor Operation: P0208ARX/0.4 hrs.
  Rear Brakes/Disc Plate(s), R&R (both sides)
    Labor Operation: P0208BRX/0.6 hrs.
  Rear Brakes/Disc Plate(s), Machine on vehicle (one sides)
    Labor Operation: P0214AMX/0.7 hrs.
  Rear Brakes/Disc Plate(s), Machine on vehicle (both sides)
    Labor Operation: P0214BMX/1.2 hrs.
  Rear Brakes/Pad(s), R&R (one sides)
    Labor Operation: P0209ARX/0.4 hrs.
  Rear Brakes/Pad(s), R&R (both sides)
    Labor Operation: P0214BRX/0.5 hrs.

RX-7
  Rear Brakes/Disc Plate(s), R&R (one side)
    Labor Operation: P0208ARX/0.3 hrs.
  Rear Brakes/Disc Plate(s), R&R (both sides)
    Labor Operation: P0208BRX/0.4 hrs.
  Rear Brakes/Disc Plate(s), Machine on vehicle (one sides)
    Labor Operation: P0214AMX/0.7 hrs.
  Rear Brakes/Disc Plate(s), Machine on vehicle (both sides)
    Labor Operation: P0214BMX/1.2 hrs.
  Rear Brakes/Pad(s), R&R (one sides)
    Labor Operation: P0209ARX/0.3 hrs.
  Rear Brakes/Pad(s), R&R (both sides)
    Labor Operation: P0214BRX/0.5 hrs.

MX-5
  Rear Brakes/Disc Plate(s), R&R (one side)
    Labor Operation: P0208ARX/0.4 hrs.
  Rear Brakes/Disc Plate(s), R&R (both sides)
    Labor Operation: P0208BRX/0.5 hrs.
  Rear Brakes/Disc Plate(s), Machine on vehicle (one sides)
    Labor Operation: P0214AMX/0.7 hrs.
  Rear Brakes/Disc Plate(s), Machine on vehicle (both sides)
    Labor Operation: P0214BMX/1.2 hrs.
  Rear Brakes/Pad(s), R&R (one sides)
    Labor Operation: P0209ARX/0.4 hrs.
  Rear Brakes/Pad(s), R&R (both sides)
    Labor Operation: P0214BRX/0.5 hrs.

MPV (1994-95)
  Rear Brakes/Disc Plate(s), R&R (one side)
    Labor Operation: P0208ARX/0.6 hrs.
  Rear Brakes/Disc Plate(s), R&R (both sides)
    Labor Operation: P0208BRX/0.8 hrs.
  Rear Brakes/Disc Plate(s), Machine on vehicle (one sides)
    Labor Operation: P0214AMX/0.7 hrs.
  Rear Brakes/Disc Plate(s), Machine on vehicle (both sides)
    Labor Operation: P0214BMX/1.2 hrs.

Copyright © 1998 Mitchell Repair Information Company, LLC
Monday, September 03, 2001 03:37PM

```
  Rear Brakes/Pad(s), R&R (one sides)
    Labor Operation:    P0209ARX/0.5 hrs.
  Rear Brakes/Pad(s), R&R (both sides)
    Labor Operation:    P0214BRX/0.6 hrs.

MX-3
  Rear Brakes/Disc Plate(s), R&R (one side)
    Labor Operation:    P0208ARX/0.4 hrs.
  Rear Brakes/Disc Plate(s), R&R (both sides)
    Labor Operation:    P0208BRX/0.6 hrs.
  Rear Brakes/Disc Plate(s), Machine on vehicle (one sides)
    Labor Operation:    P0214AMX/0.7 hrs.
  Rear Brakes/Disc Plate(s), Machine on vehicle (both sides)
    Labor Operation:    P0214BMX/1.2 hrs.
  Rear Brakes/Pad(s), R&R (one sides)
    Labor Operation:    P0209ARX/0.5 hrs.
  Rear Brakes/Pad(s), R&R (both sides)
    Labor Operation:    P0214BRX/0.9 hrs.

929
  Rear Brakes/Disc Plate(s), R&R (one side)
    Labor Operation:    P0208ARX/0.4 hrs.
  Rear Brakes/Disc Plate(s), R&R (both sides)
    Labor Operation:    P0208BRX/0.6 hrs.
  Rear Brakes/Disc Plate(s), Machine on vehicle (one sides)
    Labor Operation:    P0214AMX/0.7 hrs.
  Rear Brakes/Disc Plate(s), Machine on vehicle (both sides)
    Labor Operation:    P0214BMX/1.2 hrs.
  Rear Brakes/Pad(s), R&R (one sides)
    Labor Operation:    P0209ARX/0.3 hrs.
  Rear Brakes/Pad(s), R&R (both sides)
    Labor Operation:    P0214BRX/0.5 hrs.

323/PROTEGE
  Rear Brakes/Disc Plate(s), R&R (one side)
    Labor Operation:    P0208ARX/0.5 hrs. (1993-94)
    Labor Operation:    P0208ARX/0.4 hrs. (1995)
  Rear Brakes/Disc Plate(s), R&R (both sides)
    Labor Operation:    P0208CRX/0.9 hrs. (1993-94)
    Labor Operation:    P0208CRX/0.6 hrs. (1995)
  Rear Brakes/Disc Plate(s), Machine on vehicle (one sides)
    Labor Operation:    P0214AMX/0.7 hrs.
  Rear Brakes/Disc Plate(s), Machine on vehicle (both sides)
    Labor Operation:    P0214BMX/1.2 hrs.
  Rear Brakes/Pad(s), R&R (one sides)
    Labor Operation:    P0209ARX/0.4 hrs. (1993-94)
    Labor Operation:    P0209ARX/0.3 hrs. (1995)
  Rear Brakes/Pad(s), R&R (both sides)
    Labor Operation:    P0214BRX/0.5 hrs.
```

FRONT BRAKES LABOR OPERATION/TIME CODES - 1993-1995 MODELS

VIBRATION/PULSATION WHILE BRAKING - PROCEDURE CAT. P, NO. 001/95
Article Text (p. 8)

Copyright © 1998 Mitchell Repair Information Company, LLC
Monday, September 03, 2001 03:37PM

Millenia
  Front Brakes/Disc Plate(s), R&R (one side)
    Labor Operation: P0102ARX/0.5 hrs.
  Front Brakes/Disc Plate(s), R&R (both side)
    Labor Operation: P0208CRX/0.6 hrs.
  Front Brakes/Disc Plate(s), Machine on vehicle (one sides)
    Labor Operation: P0113AMX/0.7 hrs.
  Front Brakes/Disc Plate(s), Machine on vehicle (both sides)
    Labor Operation: P0113BMX/1.2 hrs.
  Front Brakes/Pad(s), R&R (one sides)
    Labor Operation: P0104ARX/0.5 hrs.
  Front Brakes/Pad(s), R&R (both sides)
    Labor Operation: P0104BRX/0.6 hrs.

626/MX-6
  Front Brakes/Disc Plate(s), R&R (one side)
    Labor Operation: P0102ARX/0.3 hrs.
  Front Brakes/Disc Plate(s), R&R (both side)
    Labor Operation: P0208CRX/0.5 hrs.
  Front Brakes/Disc Plate(s), Machine on vehicle (one sides)
    Labor Operation: P0113AMX/0.7 hrs.
  Front Brakes/Disc Plate(s), Machine on vehicle (both sides)
    Labor Operation: P0113BMX/1.2 hrs.
  Front Brakes/Pad(s), R&R (one sides)
    Labor Operation: P0104ARX/0.4 hrs.
  Front Brakes/Pad(s), R&R (both sides)
    Labor Operation: P0104BRX/0.5 hrs.

RX-7
  Front Brakes/Disc Plate(s), R&R (one side)
    Labor Operation: P0102ARX/0.3 hrs.
  Front Brakes/Disc Plate(s), R&R (both side)
    Labor Operation: P0208CRX/0.5 hrs.
  Front Brakes/Disc Plate(s), Machine on vehicle (one sides)
    Labor Operation: P0113AMX/0.7 hrs.
  Front Brakes/Disc Plate(s), Machine on vehicle (both sides)
    Labor Operation: P0113BMX/1.2 hrs.
  Front Brakes/Pad(s), R&R (one sides)
    Labor Operation: P0104ARX/0.3 hrs.
  Front Brakes/Pad(s), R&R (both sides)
    Labor Operation: P0104BRX/0.4 hrs.

MX-5
  Front Brakes/Disc Plate(s), R&R (one side)
    Labor Operation: P0102ARX/0.5 hrs.
  Front Brakes/Disc Plate(s), R&R (both side)
    Labor Operation: P0208CRX/0.6 hrs.
  Front Brakes/Disc Plate(s), Machine on vehicle (one sides)
    Labor Operation: P0113AMX/0.7 hrs.
  Front Brakes/Disc Plate(s), Machine on vehicle (both sides)
    Labor Operation: P0113BMX/1.2 hrs.
  Front Brakes/Pad(s), R&R (one sides)

Copyright © 1998 Mitchell Repair Information Company, LLC
Monday, September 03, 2001 03:37PM

```
    Labor Operation:    P0104ARX/0.4 hrs.
  Front Brakes/Pad(s), R&R (both sides)
    Labor Operation:    P0104BRX/0.6 hrs.

MPV
  Front Brakes/Disc Plate(s), R&R (one side)
    Labor Operation:    P0102ARX/0.6 hrs.
  Front Brakes/Disc Plate(s), R&R (both side)
    Labor Operation:    P0208CRX/0.9 hrs.
  Front Brakes/Disc Plate(s), Machine on vehicle (one sides)
    Labor Operation:    P0113AMX/0.7 hrs.
  Front Brakes/Disc Plate(s), Machine on vehicle (both sides)
    Labor Operation:    P0113BMX/1.2 hrs.
  Front Brakes/Pad(s), R&R (one sides)
    Labor Operation:    P0104ARX/0.4 hrs.
  Front Brakes/Pad(s), R&R (both sides)
    Labor Operation:    P0104BRX/0.5 hrs.

323/PROTEGE
  Front Brakes/Disc Plate(s), R&R (one side)
    Labor Operation:    P0102ARX/0.5 (1993-94)
    Labor Operation:    P0102ARX/0.3 (1995)
  Front Brakes/Disc Plate(s), R&R (both side)
    Labor Operation:    P0208CRX/0.9 hrs. (1993-94)
    Labor Operation:    P0208CRX/0.4 hrs. (1995)
  Front Brakes/Disc Plate(s), Machine on vehicle (one sides)
    Labor Operation:    P0113AMX/0.7 hrs.
  Front Brakes/Disc Plate(s), Machine on vehicle (both sides)
    Labor Operation:    P0113BMX/1.2 hrs.
  Front Brakes/Pad(s), R&R (one sides)
    Labor Operation:    P0104ARX/0.4 hrs. (1993-94)
    Labor Operation:    P0104ARX/0.3 hrs. (1995)
  Front Brakes/Pad(s), R&R (both sides)
    Labor Operation:    P0104BRX/0.5 hrs. (1993-94)
    Labor Operation:    P0104BRX/0.4 hrs. (1995)

MX-3
  Front Brakes/Disc Plate(s), R&R (one side)
    Labor Operation:    P0102ARX/0.3 hrs.
  Front Brakes/Disc Plate(s), R&R (both side)
    Labor Operation:    P0208CRX/0.5 hrs.
  Front Brakes/Disc Plate(s), Machine on vehicle (one sides)
    Labor Operation:    P0113AMX/0.7 hrs.
  Front Brakes/Disc Plate(s), Machine on vehicle (both sides)
    Labor Operation:    P0113BMX/1.2 hrs.
  Front Brakes/Pad(s), R&R (one sides)
    Labor Operation:    P0104ARX/0.5 hrs.
  Front Brakes/Pad(s), R&R (both sides)
    Labor Operation:    P0104BRX/0.6 hrs.

929
  Front Brakes/Disc Plate(s), R&R (one side)
```

VIBRATION/PULSATION WHILE BRAKING - PROCEDURE CAT. P, NO. 001/95
Article Text (p. 10)

Copyright © 1998 Mitchell Repair Information Company, LLC
Monday, September 03, 2001 03:37PM

Labor Operation: P0102ARX/0.4 hrs.
Front Brakes/Disc Plate(s), R&R (both side)
Labor Operation: P0208CRX/0.7 hrs.
Front Brakes/Disc Plate(s), Machine on vehicle (one sides)
Labor Operation: P0113AMX/0.7 hrs.
Front Brakes/Disc Plate(s), Machine on vehicle (both sides)
Labor Operation: P0113BMX/1.2 hrs.
Front Brakes/Pad(s), R&R (one sides)
Labor Operation: P0104ARX/0.4 hrs.
Front Brakes/Pad(s), R&R (both sides)
Labor Operation: P0104BRX/0.6 hrs.

Navajo
Front Brakes/Disc Plate(s), R&R (one side)
Labor Operation: P0102ARX/0.6 hrs. (2WD)
Labor Operation: P0102CRX/0.8 hrs. (4WD)
Front Brakes/Disc Plate(s), R&R (both side)
Labor Operation: P0102BRX/0.9 hrs. (2WD)
Labor Operation: P0102DRX/1.2 hrs. (4WD)
Front Brakes/Disc Plate(s), Machine on vehicle (one sides)
Labor Operation: P0113AMX/0.8 hrs. (2WD)
Labor Operation: P0113CMX/0.6 hrs. (4WD)
Front Brakes/Disc Plate(s), Machine on vehicle (both sides)
Labor Operation: P0113BMX/1.5 hrs. (2WD)
Labor Operation: P0113DMX/1.1 hrs. (4WD)
Front Brakes/Pad(s), R&R (one sides)
Labor Operation: P0104ARX/0.4 hrs.
Front Brakes/Pad(s), R&R (both sides)
Labor Operation: P0104BRX/0.7 hrs.

94 B-Series and later
Front Brakes/Disc Plate(s), R&R (one side)
Labor Operation: P0102ARX/0.5 hrs. (2WD)
Labor Operation: P0102CRX/0.7 hrs. (4WD)
Front Brakes/Disc Plate(s), R&R (both side)
Labor Operation: P0102BRX/0.8 hrs. (2WD)
Labor Operation: P0102DRX/1.1 hrs. (4WD)
Front Brakes/Disc Plate(s), Machine on vehicle (one sides)
Labor Operation: P0113AMX/0.8 hrs. (2WD)
Labor Operation: P0113CMX/0.6 hrs. (4WD)
Front Brakes/Disc Plate(s), Machine on vehicle (both sides)
Labor Operation: P0113BMX/1.5 hrs. (2WD)
Labor Operation: P0113DMX/1.1 hrs. (4WD)
Front Brakes/Pad(s), R&R (one sides)
Labor Operation: P0104ARX/0.4 hrs.
Front Brakes/Pad(s), R&R (both sides)
Labor Operation: P0104BRX/0.7 hrs.

93 B-Series and earlier
Front Brakes/Disc Plate(s), R&R (one side)
Labor Operation: P0102ARX/0.6 hrs. (2WD)
Labor Operation: P0102BRX/0.9 hrs. (4WD)

VIBRATION/PULSATION WHILE BRAKING - PROCEDURE CAT. P, NO. 001/95
Article Text (p. 11)

Copyright © 1998 Mitchell Repair Information Company, LLC
Monday, September 03, 2001 03:37PM

```
Front Brakes/Disc Plate(s), R&R (both side)
  Labor Operation:    P0102CRX/1.1 hrs. (2WD)
  Labor Operation:    P0102DRX/1.6 hrs. (4WD)
Front Brakes/Disc Plate(s), Machine on vehicle (one sides)
  Labor Operation:    P0113AMX/0.8 hrs. (2WD)
  Labor Operation:    P0113CMX/0.6 hrs. (4WD)
Front Brakes/Disc Plate(s), Machine on vehicle (both sides)
  Labor Operation:    P0113BMX/1.5 hrs. (2WD)
  Labor Operation:    P0113DMX/1.1 hrs. (4WD)
Front Brakes/Pad(s), R&R (one sides)
  Labor Operation:    P0104ARX/0.4 hrs.
Front Brakes/Pad(s), R&R (both sides)
  Labor Operation:    P0104BRX/0.6 hrs.
```

END OF ARTICLE

1.2L ENG COOLING FAN DRIVE - NEW GREASE FOR COLD CAT. 3, NO. 019/83
Article Text

Copyright © 1998 Mitchell Repair Information Company, LLC
Saturday, September 08, 2001 09:17AM

ARTICLE BEGINNING

TECHNICAL SERVICE BULLETIN

1983 RX-7 COOLING FAN DRIVE (CLUTCH)

Models 1983 RX-7
Bulletin No. 019/83
Category 3
Date 2/1/83

DESCRIPTION

In order to improve the characteristic of bearing grease in cold climates, the type of grease has been changed.

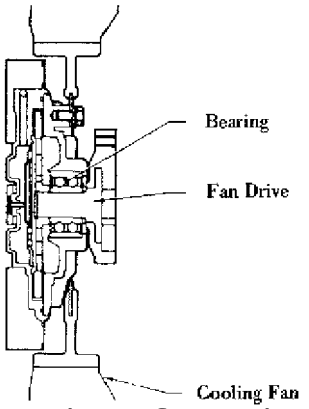

Fig. 1: Location of Bearing in Fan Drive

VIN OF PRODUCTION CHANGE

RX-7 JM1FB331 D0717536	November, 1982

PARTS INFORMATION

NEW PART NO.	OLD PART NO.	DESCRIPTION	INTERCHANGEABILITY
N201 15 210B	N201 15 210A	Fan Drive	A
N201 15 250B	N201 15 250A	Fan & Fan Drive	A

Interchangeability "A" means new part can be used in place of former part.

END OF ARTICLE

1.2L HARD CRANK/NO START - CARBON IN ROTOR/HOUSING CAT. 1, NO. 103/83
Article Text

Copyright © 1998 Mitchell Repair Information Company, LLC
Saturday, September 08, 2001 09:17AM

ARTICLE BEGINNING

TECHNICAL SERVICE BULLETIN

HARD CRANKING

Models	RX7
Bulletin No.	103/83
Category	1
Date	5/7/83
Symptom	Hard Cranking/No Start

DESCRIPTION

If RX-7 vehicles have not been in use for a long period of time and the engine is cranked with a weak battery, hard cranking may occur due to carbon trap.

When the vehicles have been stored for such a long period of time carbon accumulated on the rotor surface may be flaked off, and it can be trapped between the rotor and rotor housing by the sweeping motion of the apex seals only when the engine is started. It will not occur when the engine is running.

To verify carbon trap, the following two conditions must be confirmed:

l) The problem occurred when the engine was started.
2) The apex seal can be observed through one of the leading spark plug holes. (If carbon trap occurs, the rotor will always stop at this location).

If carbon trap is verified, please use the following procedure:

Procedure:

I. For vehicles with manual transmission:
   1) Disconnect the negative battery cable and remove the spark plugs.
   2) Hoist the vehicle, remove the starter and install the Flywheel Turning Tool, P/N 49FA 42 065. This special tool is newly established for vehicles with manual transmission.
   3) Turn the Flywheel Turning Tool counterclockwise (as shown in Fig. 1 until the force is reduced considerably).

CAUTION: Do not turn the Flywheel in the direction of normal engine rotation.

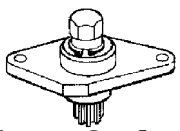

Fig. 1: View of Flywheel Turning tool (49FA 42 065)

   4) Remove the special tool (Fig. 2) and reinstall the starter.

Copyright © 1998 Mitchell Repair Information Company, LLC
Saturday, September 08, 2001 09:17AM

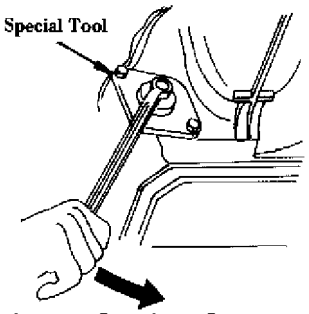

Fig. 2: Using Flywheel Turning Tool

5) Lower the vehicle. Turn the front pulley clockwise, facing the rear of the car, with a l9mm wrench. At the same time, inject 20-30 cc of engine oil through carburetor. Do not exceed the specified quantity of oil.
6) Turn the engine approximately five (5) revolutions to make certain the engine rotates freely.

NOTE: Do not use the starter to rotate the engine.

7) Install the spark plugs.
8) Check that the battery is fully charged.
9) Start the engine and warm up to normal operating temperature.
10) Stop the engine. Remove the spark plugs and check compression. If the compression is over 6.0 kg/cmý, the repair is completed.

II. For vehicles with automatic transmission:
1) Disconnect the negative battery cable and remove the spark plugs.
2) Remove the inspection plate from the converter housing. (Fig. 3).

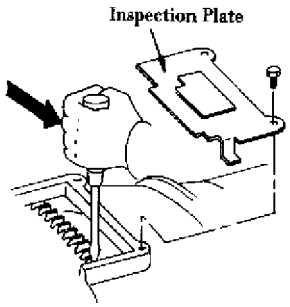

Fig. 3: Removing Inspection Plate From Convertor Housing

3) Insert a standard screwdriver through the inspection hole. Turn the flywheel by prying against the flywheel teeth and converter housing as shown until the force is reduced considerably.

1.2L HARD CRANK/NO START - CARBON IN ROTOR/HOUSING CAT. 1, NO. 103/83
Article Text (p. 3)

Copyright © 1998 Mitchell Repair Information Company, LLC
Saturday, September 08, 2001 09:17AM

CAUTION: Do not turn the flywheel in the direction of normal engine rotation.

4) Follow the procedure in I, steps 5-10.

END OF ARTICLE

1.3L ENG CLUTCH VIB - REPL FLYWHEEL ALIGNMENT PINS CAT. 6, NO. 002/86
Article Text

Copyright © 1998 Mitchell Repair Information Company, LLC
Saturday, September 08, 2001 09:18AM

ARTICLE BEGINNING

TECHNICAL SERVICE BULLETIN

CLUTCH ALIGNMENT PINS

Models	1983-86 RX-7
Bulletin No.	002/86
Category	6
Date	4/8/86
Symptom	Clutch Vibration

DESCRIPTION

Replacement flywheels for the 1983-1986 RX-7 are shipped without clutch alignment pins. These pins are necessary to accurately align the clutch cover to the flywheel during assembly. Failure to use the alignment pins will result in vibration of the flywheel and clutch assembly. See Fig. 1.

When replacing the flywheel, please order the pin by the part number listed below.

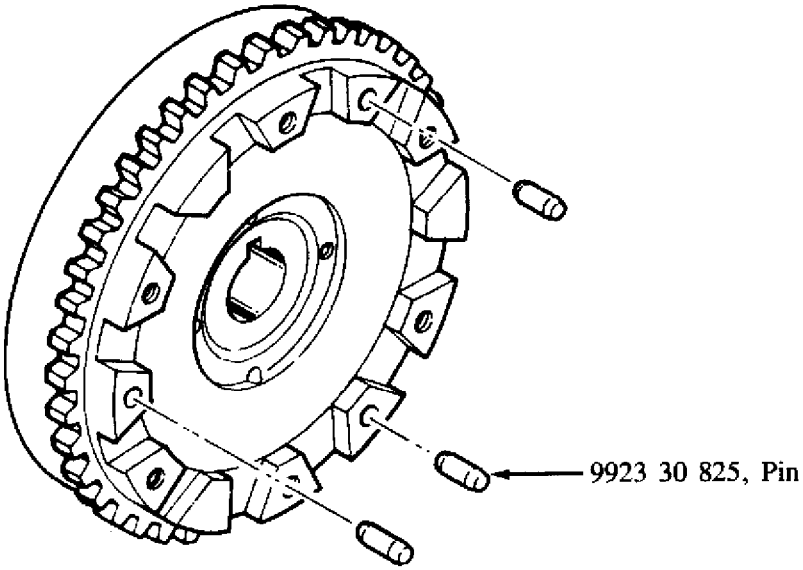

Fig. 1: 83-86 RX7 Flywheel and Alignment Pins

PARTS INFORMATION

PART NUMBER	DESCRIPTION	QTY
9923 30 825	Knock Pin	3

END OF ARTICLE

BAD SHUTTER VALVE CAUSES ROUGH IDLE/NO IDLE
Article Text

Copyright © 1998 Mitchell Repair Information Company, LLC
Saturday, September 08, 2001 10:03AM

ARTICLE BEGINNING

TECHNICAL INFORMATION TIP

ROTARY ROUGH IDLE

YEAR(S): 1982-85
MANUFACTURER: Mazda
MODELS: RX-7
DATE OF ISSUE: June 1993

ISSUE: BAD SHUTTER VALVE CAUSES ROUGH IDLE/NO IDLE

A bad shutter valve may cause a rough or no idle on 1982-85 Mazda RX-7 models. To test the shutter valve, remove the hose from the valve (it's located below the carburetor) and check for vacuum. If there is vacuum at idle, the shutter valve is bad and should be replaced.

Another thing to check that may be causing your idle problems is the vacuum hose that leads from the carburetor to the AA valve. This large hose may be burned or split at the bend in the hose near the intake manifold and can introduce a large vacuum leak if it's leaking.

Courtesy of Import Service Magazine
with thanks to:

Bill Jasper
Charles Levy Motor Company
Columbus, Georgia

REFERENCE NUMBER: MAZ0518AP

NOTE: This information has been obtained from sources generally believed to be reliable. Use your own judgment before relying on this data. Neither the suppliers of these Technical Information Tips, nor Mitchell International, guarantees or assumes responsibility for data accuracy or completeness, nor is liability assumed by the suppliers of these Technical Information Tips or Mitchell International for any claims or damages resulting from the use of this information.

END OF ARTICLE

ENGINE STAND ADAPTOR MODIFICATIONS CAT. 40, NO. 025/88
Article Text

Copyright © 1998 Mitchell Repair Information Company, LLC
Saturday, September 08, 2001 09:18AM

ARTICLE BEGINNING

TECHNICAL SERVICE BULLETIN

ENGINE STAND ADAPTOR MODIFICATION

Model: All Models
Bulletin No.: 023/88
Date: 10/28/88
Category: 40

DESCRIPTION

With the introduction of universal engine hanger (49L0-10-1A0), a slight modification will be necessary on some types of engine stand adaptors.

If you currently use engine stand adaptor 0000-41-001C or 0000-41-001R, the following modifications is needed to obtain adequate bolt clearance for the universal engine hanger. If you use the older style engine stand adaptor (0000-41-001H), no modification is required.

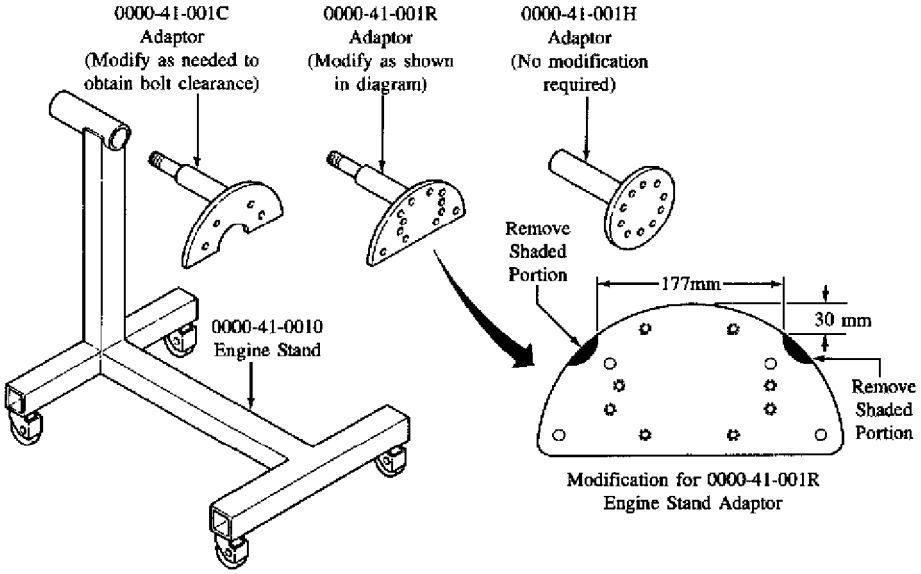

Fig. 1: Engine Stand Adaptor Modification

END OF ARTICLE

FILLING COOLING SYSTEM CAT. 3, NO. 008/87
Article Text

Copyright © 1998 Mitchell Repair Information Company, LLC
Saturday, September 08, 2001 09:18AM

ARTICLE BEGINNING

TECHNICAL SERVICE BULLETIN

ENGINE COOLANT

Model: ALL MODELS
Bulletin No.: 008/87
Date: 7/16/87
Category: 3

DESCRIPTION

The proper level for the coolant is between the "FULL" and "LOW" marks on the coolant reservoir. If the level is below the "LOW" mark when the engine is cool, add enough 50/50 mixture of water and ethylene glycol anti-freeze mix to bring the level up to or near the "FULL" mark. Do not overfill.

In addition to freezing protection, ethylene glycol provides corrosion protection for aluminum engine parts.

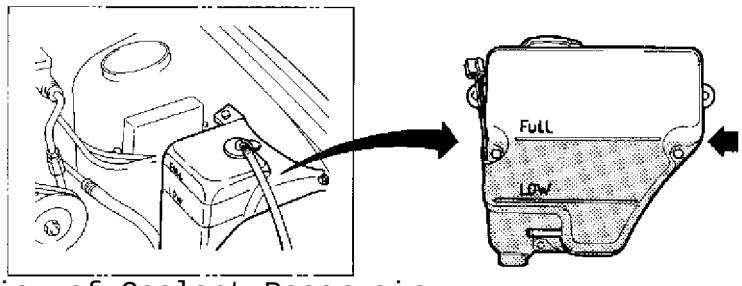

Fig. 1: View of Coolant Reservoir

CAUTION WHEN ADDING COOLANT

1. If water only is added, the mixture ratio of coolant will be reduced, which may result in the following:

   * Rust or corrosion in the engine.
   * Water leakage or overheating caused by rust or corrosion in the radiator.
   * Water leakage due to corrosion of the water pump at the seal.

2. If the reservoir is overfilled, a rise in coolant temperature will cause expansion of the coolant volume, which will allow some coolant to overflow. The customer may misunderstand this overflow to be a mechanical problem.

CAUTION WHEN REPLACING COOLANT

After replacement, set the heater control lever to the "HOT" position and warm up the engine to the normal operating temperature (Thermostat

FILLING COOLING SYSTEM CAT. 3, NO. 008/87
Article Text (p. 2)

Copyright © 1998 Mitchell Repair Information Company, LLC

fully open). Check that there are no coolant leaks.

Add additional coolant as needed so that the radiator is full and the coolant level is at the "FULL" mark on the coolant reservoir.

NOTE: If you encounter a reservoir bottle that is empty, it is likely that the level of coolant inside the radiator is also low. In such a case always....

1. Wait until the engine is cool and then remove the radiator cap. Add coolant as needed to bring the level inside the radiator up to full.
2. Pressure check the radiator and radiator. Also perform general check of coolant system.

END OF ARTICLE

INSTALLING MAZDA BRAND OIL FILTER CAT. 2, NO. 005/89
Article Text

Copyright © 1998 Mitchell Repair Information Company, LLC
Saturday, September 08, 2001 09:19AM

ARTICLE BEGINNING

TECHNICAL SERVICE BULLETIN

ENGINE OIL FILTER CARTRIDGE

Models ALL MODELS
Bulletin No. 005/89
Category 2
Date 2/10/89

DESCRIPTION
When servicing Mazda vehicles, please be aware of the following installation procedure and tightening requirements of the Mazda brand oil filters.

INSTALLATION PROCEDURE
1. Apply a thin film of oil to the surface of the gasket before installing the filter.
2. Tightening requirements:

Oil Filter Part No.	
FEY0 14 3020	Tighten 1 and 1/6 turns after the gasket contacts the filter base.
JEY0 14 3020	Tighten 1 and 1/6 turns after the gasket contacts the filter base (six dots are printed on the filter at even intervals to facilitate tightening instructions).
N3Y6 14 3020	Tighten by hand.

NOTE: For rotary engine with a water cooled oil cooler, tighten an additional 1/12 turn with a suitable tool (twelve dots are printed on the filter at even intervals to facilitate tightening instructions).

8173 23 8020	Tighten by hand.
F802 23 8020	Tighten by hand.

3. Start engine and check for oil leakage.

IMPORTANT: Always be sure the correct filter is installed on the proper Mazda vehicle.

INSTALLATION INSTRUCTIONS FOUND ON THE FILTER BOXES AND THE FILTERS

FEY0 14 3020	8173 23 8020
Caution	Caution
1. Apply a Thin Film of Oil to the Surface of Gasket before Screwing on.	1. Apply a Thin Film of Oil to the Surface of Gasket before Screwing on.
2. Tighten 1-1/6 Turn after Contacts Base.	2. Then tighten enough by Gasket hand.
3. Start Engine and Check	3. Start Engine and Check

INSTALLING MAZDA BRAND OIL FILTER CAT. 2, NO. 005/89
Article Text (p. 2)

Copyright © 1998 Mitchell Repair Information Company, LLC
Saturday, September 08, 2001 09:19AM

for Oil Leakage.
TOKYO ROKI CO., LTD.

JEYO 14 3020
Caution
1. Apply a Thin Film of Oil to the Surface of Gasket before Screwing on.
2. Tighten 1-1/6 Turn after Gasket Contacts Base.
3. Start Engine and Check for Oil Leakage.
TOKYO ROKI CO., LTD.

N3Y6 14 3020
Caution
1. Apply a Thin Film of Oil to the Surface of Gasket before Screwing on.
2. Then Tighten Enough by Hand, But Rotary Engine with watercooled oil-cooler Tighten Additional About 1/12 turn by tool.
3. Start Engine and Check for Oil Leakage.
TOKYO ROKI CO., LTD.

for Oil Leakage.
TOKYO ROKI CO., LTD.

F802 23 8020
Caution
1. Apply a Thin Film of Oil to the Surface of Gasket before Screwing on.
2. Then tighten enough by hand.
3. Start Engine and Check for Oil Leakage.
TOKYO ROKI CO., LTD.

END OF ARTICLE

OIL LEAK AT REAR STATIONARY GEAR O-RING - CAR FIX CAT. B, NO. 003/98
Article Text

Copyright © 1998 Mitchell Repair Information Company, LLC
Saturday, September 08, 2001 09:19AM

ARTICLE BEGINNING

TECHNICAL SERVICE BULLETIN

OIL LEAK AT REAR STATIONARY GEAR O-RING/ON-CAR REPLACEMENT PROCEDURE

Model(s): 1979-95 Mazda RX-7
Category: B (01) - Engine
Bulletin No.: 003/98
Date: July 16, 1998

DESCRIPTION

The following procedure is for on-car rear stationary (RS) gear O-ring replacement. This procedure is not included in the Workshop Manual. When the RS gear O-ring is leaking, use the following on-car procedure.

REPAIR PROCEDURE

1. Verify customer complaint.

2. Remove the flywheel (M/T) or counterweight (A/T). Refer to the Workshop Manual section C and H.

3. Set the front rotor to TDC (top dead center) per the Work-shop Manual section C.

4. Remove the six bolts from the RS gear.

NOTE: If the eccentric shaft and rotor are rotated with the RS gear removed, they cannot be re-used. The engine will require overhauling.

5. Insert two screwdrivers or pry bars and pry out the RS gear. See Fig. 1.

CAUTION: To prevent the (RS) gear from falling out, loosely reinstall one of the bolts back into the gear. This will hold the gear in place while prying.

6. After the (RS) gear is pried loose, remove the one bolt used to hold it in place, and remove the (RS) gear assembly.

7. Remove the O-ring and oil seal, and clean the (RS) gear. After (RS) gear is cleaned, use shop air to remove any remaining debris. See Fig. 2.

8. Apply a small amount of oil to the new O-ring and oil seal and install.

Copyright © 1998 Mitchell Repair Information Company, LLC
Saturday, September 08, 2001 09:19AM

9. Install the (RS) gear.

   Tightening torque: 16-22 N.m

10. Install remaining parts in the reverse order of removal.

11. Verify repair.

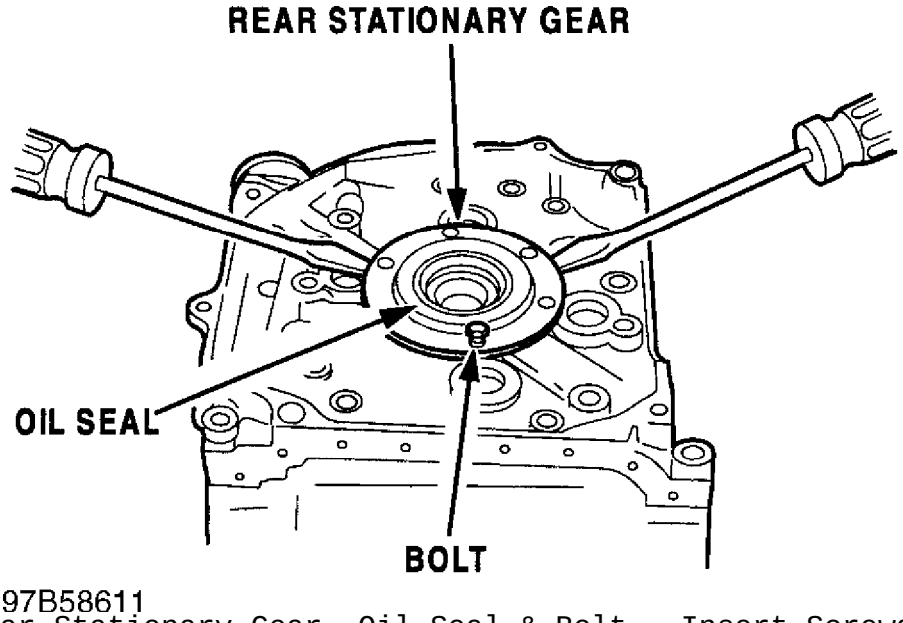

Fig. 1: Rear Stationary Gear, Oil Seal & Bolt - Insert Screwdrivers

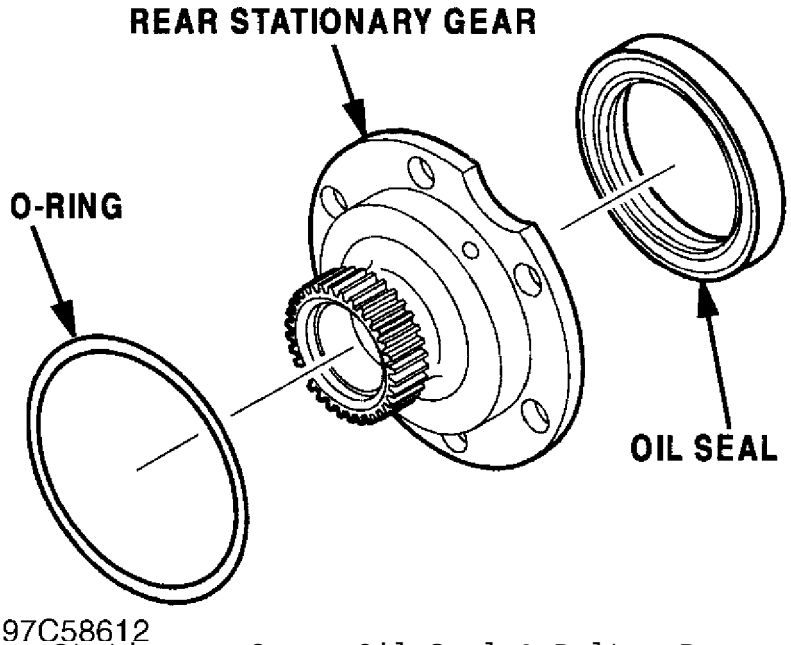

Fig. 2: Rear Stationary Gear, Oil Seal & Bolt - Remove & Clean

PARTS INFORMATION

OIL LEAK AT REAR STATIONARY GEAR O-RING - CAR FIX CAT. B, NO. 003/98
Article Text (p. 3)

Copyright © 1998 Mitchell Repair Information Company, LLC
Saturday, September 08, 2001 09:19AM

PARTS INFORMATION TABLE

Part Number	Description	Qty.	Applicable Models
0813-10-555A	O-Ring	1	Rotary Engine

WARRANTY INFORMATION

NOTE:

* This information applies to verified customer complaints on vehicles covered under normal warranty. Refer to the SRT microfiche for warranty term information.

* The Operation Numbers / Labor Hours below include complete transmission R&R, flywheel or counterweight R&R, and road test.

Warranty Type:	A
Symptom Code:	76
Damage Code:	Use Code Applicable to Problem
Part Number Main Cause:	0813-10-555A
Quantity:	1
Operation Number / Labor Hours:	XX012XR1 / 2.9 (FC - M/T)
	XX012XR2 / 3.6 (FC - A/T)
	XX012XR3 / 3.7 (FD - M/T)
	XX012XR4 / 4.7 (FD - A/T)

END OF ARTICLE

PARTIAL ENGINE (LONG BLOCK) AVAILABILITY CAT. B, NO. 004/94
Article Text

Copyright © 1998 Mitchell Repair Information Company, LLC
Saturday, September 08, 2001 09:19AM

ARTICLE BEGINNING

TECHNICAL SERVICE BULLETIN

PARTIAL ENGINE (LONG BLOCK) AVAILABILITY

Model(s): All Mazda Models
Category: B
Bulletin No.: 004/94
Date: 3/9/94
Revised: 6/21/94

DESCRIPTION

Partial engines are available as repair components and will replace the need to replace the entire engine. When installing a partial engine, the following components must be utilized from the original engine:

1. Engine Electrical Parts
2. Cooling System Parts
3. Intake And Exhaust System Parts
4. Fuel And Emission Control Parts
5. Clutch And/Or Flywheel

WARRANTY INFORMATION

Partial engines are warranted for the remainder or the original vehicle warranty or for the first 12 months after installation of the partial engine, whichever is longer. All warranty repairs of the partial engine replacement will require prior authorization from the DCSM.

NEW ENGINE (LONG BLOCK) REPLACEMENT PROGRAM

B-TRUCKS NEW ENGINE AVAILABILITY PARTS TABLE

Year/Model	Engine P/N	Gasket P/N	Remarks
1979-84 B2000	HEA4-23-800	8AU1-23-900	
1986-87 B2000	FEY3-02-300	8AU1-02-310	Requires the replacement of the Heat Gauge Unit - (G607-18-510)
1987-89 B2200	F2Y3-02-300	8AU2-02-310	
1990-93 B2200 (CAL)	F2Y6-02-300	8AU5-02-310	
(FED)	F2Y7-02-300	8AU2-02-310	

PARTIAL ENGINE (LONG BLOCK) AVAILABILITY CAT. B, NO. 004/94
Article Text (p. 2)

Copyright © 1998 Mitchell Repair Information Company, LLC
Saturday, September 08, 2001 09:19AM

1990-93 B2600 (4x4)	(A/T)	G6Y1-02-300	8AU3-02-310	
	(M/T)	G6Y2-02-300	8AU3-02-310	
1990-93 B2600 (4x2)	(A/T)	G6Y3-02-300	8AU3-02-310	
	(M/T)	G6Y4-02-300	8AU3-02-310	
1994 B-TRUCKS		NONE	NONE	

MPV NEW ENGINE AVAILABILITY PARTS TABLE

Year/Model		Engine P/N	Gasket P/N	Remarks
1989-94 MPV	(2.6L)	G6Y5-02-300	8AL1-02-310	
1989-94 MPV (3.0L)	(4X2)	JE57-02-300	8AL2-02-310	
	(4X4)	JE58-02-300	8AL2-02-310	

NAVAJO NEW ENGINE AVAILABILITY PARTS TABLE

Year/Model		Engine P/N	Gasket P/N	Remarks
1991-93 NAVAJO		NONE	NONE	

323 NEW ENGINE AVAILABILITY PARTS TABLE

Year/Model		Engine P/N	Gasket P/N	Remarks
1986-89 323 (1.6L)	(4X2)	B630-02-300	8AB1-02-310	Does Not Fit 86-87 w/Std. Steering & A/C
1988-89 323 (1.6L TURBO)	(4X2)	WILL BE AVAILABLE.	8AB2-02-310	
	(4x4)	WILL BE AVAILABLE.	8AB2-02-310	
1990-92 323(1.6L, 4x2)		B6AL-02-300	8AB9-02-310	
1993-94 323, (1.6L, 4X2)	(FED)	B6AL-02-300	8AB9-02-310	
	(CAL)	B6BN-02-300	8AB8-02-310	

PROTEGE NEW ENGINE AVAILABILITY PARTS TABLE

PARTIAL ENGINE (LONG BLOCK) AVAILABILITY CAT. B, NO. 004/94
Article Text (p. 3)

Copyright © 1998 Mitchell Repair Information Company, LLC
Saturday, September 08, 2001 09:19AM

Year/Model	Engine P/N	Gasket P/N	Remarks
1990-94 PROTEGE (M/T) (1.8L DOHC)	BP05-02-300	8ABA-02-310	
(A/T)	BP06-02-300	8ABA-02-310	
1990-94 PROTEGE (M/T) (1.8L SOHC)	BP01-02-300	8ABB-02-310	
(A/T)	BP02-02-300	8ABB-02-310	

626/MX-6 NEW ENGINE AVAILABILITY PARTS TABLE

Year/Model	Engine P/N	Gasket P/N	Remarks
1981-82 626	HE41-02-300	8AU1-02-310	
1983-85 626	FE01-02-300	8AG1-02-310	
1986-87 626 (NON-TURBO)	FEY1-02-300	8AG2-02-310	Requires the replacement of the Heat Gauge Unit - (G607-18-510)
(TURBO)	FEY2-02-300	8AG3-02-310	
1988-89 626/MX-6 (NON-TURBO)	F2Y1-02-300	8AG4-02-310	
(TURBO)	F2Y2-02-300	8AG5-02-310	
1990-92 626/MX-6 (NON-TURBO)	F2Y4-02-300	8AG4-02-310	
(TURBO)	F2Y5-02-300	8AG5-02-310	
1993-94 626/MX-6 (2.0L) (M/T)	FS01-02-300A	8AGB-02-310	
1993 626/MX-6 (2.0L) (A/T)	FS01-02-300A	8AGB-02-310	
1994 626/MX-6 (2.0L) (A/T)	FS71-02-300A	8AGB-02-310	
1993-94 626/MX-6(2.5L)	KLY1-02-300A	8AE3-02-310	

929 NEW ENGINE AVAILABILITY PARTS TABLE

Year/Model	Engine P/N	Gasket P/N	Remarks

PARTIAL ENGINE (LONG BLOCK) AVAILABILITY CAT. B, NO. 004/94
Article Text (p. 4)

Copyright © 1998 Mitchell Repair Information Company, LLC
Saturday, September 08, 2001 09:19AM

1988-89 929	(3.0L SOHC)	JE15-02-300	8AH1-02-310	
1990-91 929 (3.0L)	(SOHC)	JE39-02-300	8AJA-02-310	
	(DOHC)	JE27-02-300	8AJB-02-310	
1992-93 929 (3.0L)	(DOHC)	NONE	NONE	Use Short Block # JE48-02-200B
1994 929	(3.0L DOHC)	JE74-02-300A	8AH3-02-310	

RX-7 NEW ENGINE AVAILABILITY PARTS TABLE

Year/Model	Engine P/N	Gasket P/N	Remarks
ALL RX-7			See Parts Bulletin R-6 MANA Rebuilt Rotary Engines

MIATA NEW ENGINE AVAILABILITY PARTS TABLE

Year/Model	Engine P/N	Gasket P/N	Remarks
1990-93 MIATA (1.6L)	(M/T) B61P-02-300	8AN1-02-310	
	(A/T) B64J-02-300	8AN1-02-310	
1994 MIATA	(1.8L) BPE8-02-300	8ABC-02-310	

MX-3 NEW ENGINE AVAILABILITY PARTS TABLE

Year/Model	Engine P/N	Gasket P/N	Remarks
1992-93 MX-3(1.6L,I-4)	B66S-02-300	8AE2-02-310	
1994 MX-3 (1.6L,1-4)	B6DC-02-300	8ABD-02-310	
1992-94 MX-3(1.8L,V-6)	K8Y1-02-300	8AE3-02-310	

MILLENlA NEW ENGINE AVAILABILITY PARTS TABLE

Year/Model	Engine P/N	Gasket P/N	Remarks
1994 MILLENIA (2.3L, V-6 MILLER)	KJY2-02-300	8AK1-02-310A	

PARTIAL ENGINE (LONG BLOCK) AVAILABILITY CAT. B, NO. 004/94
Article Text (p. 5)

Copyright © 1998 Mitchell Repair Information Company, LLC
Saturday, September 08, 2001 09:19AM

	(2.5L, V-6)	KL47-02-300	8AK2-02-310	

END OF ARTICLE

PROPYLENE GLYCOL BASED COOLANT: RECOMMENDATIONS CAT. E, NO. 001/94
Article Text

Copyright © 1998 Mitchell Repair Information Company, LLC
Saturday, September 08, 2001 09:19AM

ARTICLE BEGINNING

TECHNICAL SERVICE BULLETIN

PROPYLENE GLYCOL BASED COOLANT

Model(s): All Mazda Models
Category: E
Bulletin No.: 001/94
Date: 10/21/94

AFFECTED MODELS

All Mazda Vehicles

DESCRIPTION

Mazda does not recommend propylene glycol coolants. Available information indicates the following characteristics regarding propylene glycol coolants:

* Provides less heat transfer
* May not provide adequate corrosion protection (to meet Mazda specifications)
* Freezing temperature is 10 - 20% higher than ethylene glycol based coolants

Mazda recommends ethylene glycol and water mixture. Customer's with questions regarding coolant should be directed to the information in Section 7 of their owner's manual.

END OF ARTICLE

RATTLE FROM FLOOR WHEN ACCEL - BROKEN MUFFLER HANGER CAT. 4, NO. 055/89
Article Text

Copyright © 1998 Mitchell Repair Information Company, LLC
Saturday, September 08, 2001 09:19AM

ARTICLE BEGINNING

TECHNICAL SERVICE BULLETIN

PRE-SILENCER HANGER BREAKAGE

Models	ALL MODELS
Bulletin No.	055/89
Category	4
Date	2/20/89
Symptom	Noise

DESCRIPTION

If a rattling noise is heard from underneath the floor during the acceleration, this may be due to the broken silencer hanger.

REPAIR PROCEDURE

Check the exhaust hanger for breakage. If it is broken, replace the pre-silencer with the modified one which has been reinforced with stiffener as shown in Fig. 1.

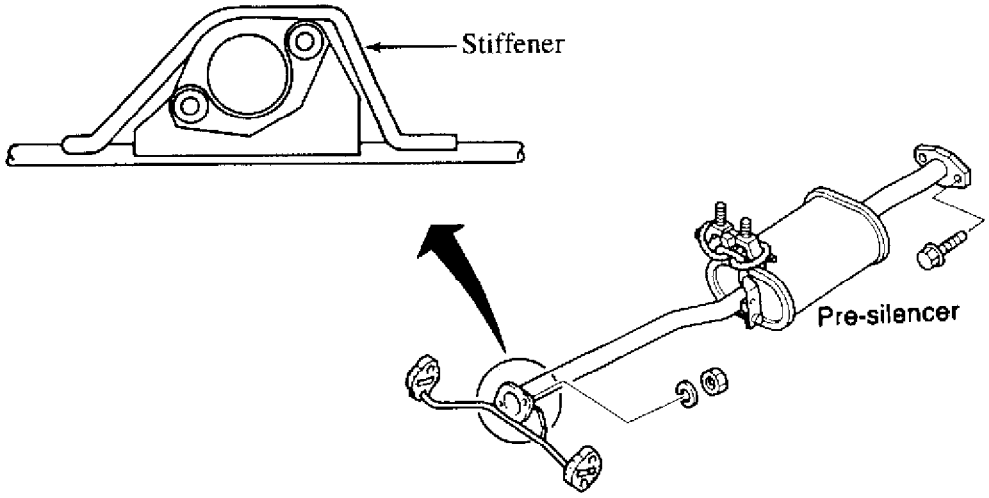

Fig. 1: View of Pre-Silencer with Stiffener

PARTS INFORMATION

NEW PART NO.	OLD PART NO.	DESCRIPTION	INTERCHANGEABILITY
B601 40 300B	B601 40 300A	Pre-Silencer	NEW = OLD

END OF ARTICLE

RECONDITIONED ANTI-FREEZE CAT. E, NO. 002/96
Article Text

Copyright © 1998 Mitchell Repair Information Company, LLC
Saturday, September 08, 2001 09:20AM

ARTICLE BEGINNING

TECHNICAL SERVICE BULLETIN

RECONDITIONED ANTI-FREEZE

Model(s): All Mazda Models
Category: E - Cooling System
Bulletin No.: 002/96
Date: June 27, 1996

DESCRIPTION

Mazda does not recommend the use of reconditioned anti-freeze. Mazda recommends ethylene glycol base coolants for all Mazda aluminum engines.

Although reconditioned anti-freeze is available, this product may contain silicon particles which may be abrasive to the water pump seal. Additionally, reconditioned anti-freeze may contain chemicals (alcohol or methanol) that erode metal parts.

Service Managers should inform customers that Mazda does not recommend reconditioned anti-freeze and that problems (mechanical and otherwise) related to the use of reconditioned anti-freeze are not warrantable.

CAUTION: Antifreeze is considered a hazardous and toxic substance. Handled and disposed must be done in accordance with local, state and federal laws.

END OF ARTICLE

RECONDITIONED ANTIFREEZE WARNINGS CAT. E, NO. 001/90
Article Text

Copyright © 1998 Mitchell Repair Information Company, LLC
Saturday, September 08, 2001 09:20AM

ARTICLE BEGINNING

TECHNICAL SERVICE BULLETIN

RECONDITIONED ANTIFREEZE

Models	All Models
Bulletin No.	001/90
Category	E
Date	2/14/90

DESCRIPTION

Mazda Motor Corporation (MC) does not recommend the use of reconditioned anti-freeze. Please use ethylene glycol base coolant for Mazda's aluminum engines.

Although it is available on the market, reconditioned anti-freeze might contain silicon particles, which could abrade the water pump seal, or it might contain other chemicals, alcohol or methanol, that may erode metal parts.

Since Mazda does not advocate the use of reconditioned anti-freeze, any problems caused by its use cannot be covered by the warranty.

END OF ARTICLE

REVISED ROTORY ENGINE PRICING CAT. RF, NO. 95-24
Article Text

Copyright © 1998 Mitchell Repair Information Company, LLC
Saturday, September 08, 2001 09:20AM

ARTICLE BEGINNING

TECHNICAL SERVICE BULLETIN

REVISED ROTARY ENGINE PRICING

Model(s): All Mazda RX-7 Models
Category: Parts Flash
Bulletin No.: RF 95-24
Date: October 20, 1995

DESCRIPTION

The price of the Rebuilt Rotary Engines has changed. A core charge of $600.00 is now included in the dealer Price. Refer to the PARTS INFORMATION TABLE.

These new prices were effective 10-2-95 and are not reflected in List or the DMS tapes. The DMS tapes will be updated the first week of November. The next issue of the Dealer Price List will contain the new prices.

PARTS INFORMATION

PARTS INFORMATION TABLE

Part Number	Year/Model	Current Pricing	Revised Pricing
A008-99-008R	1970-73	$1,000.00	$1,600.00
B008-99 008R	1974-78	$1,000.00	$1,600.00
C008-99-008R	1979-85 RX-7 12A	$1,250.00	$1,850.00
D008-99-008R	1984-85 RX-7 13B	$1,250.00	$1,850.00
E008-99-008R	86-88 RX-7 13B W/O TURBO	$1,250.00	$1,850.00
F008-99-008R	87-88 RX-7 13B W/ TURBO	$1,250.00	$1,850.00
G008-99-008R	89-91 RX-7 13B W/O TURBO	$1,250.00	$1,850.00
H008-99-008R	89-91 RX-7 13B W/ TURBO	$1,270.00	$1,870.00
J008-99X08R	1993 RX-7	$1,270.00	$1,870.00

REVISED ROTORY ENGINE PRICING CAT. RF, NO. 95-24
Article Text (p. 2)

Copyright © 1998 Mitchell Repair Information Company, LLC
Saturday, September 08, 2001 09:20AM

	W/ TWIN TURBO

END OF ARTICLE

1.2L ENG NO POWER/STUMBLE/ROUGH IDLE/BUCKING CAT. 4, NO. 014/85
Article Text

Copyright © 1998 Mitchell Repair Information Company, LLC
Saturday, September 08, 2001 09:29AM

ARTICLE BEGINNING

TECHNICAL SERVICE BULLETIN

APPLICATION

1981-85 RX7 (High Altitude Vehicles)

SUBJECT

No Power, Stumble, Rough Idle, Bucking, Etc.

REFERENCE

Mazda Motors Corp., Service Bulletin, No. 4 014/85, August, 1985

CONDITION & CAUSE

Some 1981-85 RX7 high altitude vehicles may exhibit one or more of the following driveability problems:

* Lack of acceleration, hesitation on acceleration
* No power under load
* Engine stumble, surge or bucking below approximately 3000 RPM
* Rough idle

One or more of the above conditions may be caused by the altitude compensator valve. The altitude compensator valve is attached to the carburetor to supply additional air into the carburetor at high altitudes (1640-4920 ft.)

REPAIR

1) Remove the altitude compensator valve. Blow through the valve from port "A" and "B". Above 4920 feet, air from port "A" should exit from port "D" and air into port "B" exits from port "C".
2) Below 1640 feet air should not pass through valve. If not, replace the altitude compensator valve (N249 20 770).

END OF ARTICLE

1.2L NEW THROTTLE SENSOR ADJUSTING PROCEDURE CAT. 1A, NO. 029/83
Article Text

Copyright © 1998 Mitchell Repair Information Company, LLC
Saturday, September 08, 2001 09:29AM

ARTICLE BEGINNING

TECHNICAL SERVICE BULLETIN

THROTTLE SENSOR CHECKING AND ADJUSTING PROCEDURES

Models	1983 RX-7
Bulletin No.	029/83
Category	1A
Date	2/8/83

DESCRIPTION

In order to ease extensive damage on emission control unit and related components, electrical connection ("+" and "-") for the circuits has been reversed.

Due to a change in the vehicle's wiring, it is necessary to connect the alligator clip of the tester to B+ instead of ground when checking or adjusting the throttle sensor.

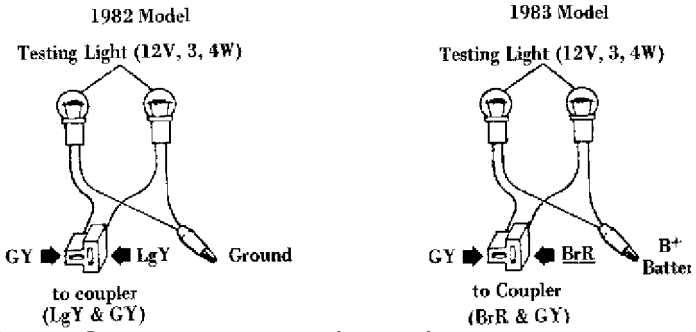

Fig. 1: View of Test Connections in 1982 & 1983 Models

END OF ARTICLE

1.3L ENG THROTTLE SENSR TOOL & ADJUSTMENT INFO CAT. 40, NO. 007/85
Article Text

Copyright © 1998 Mitchell Repair Information Company, LLC
Saturday, September 08, 2001 09:30AM

ARTICLE BEGINNING

TECHNICAL SERVICE BULLETIN

THROTTLE SENSOR CHECKER

Models	1981-85 RX-7
Bulletin No.	007/85
Category	40
Date	7/23/85

DESCRIPTION

The Throttle Sensor Checker and Attachment have been established for adjusting the throttle sensor for 1984-1985 REX-7 (13B) with E.G.I. and 1981-1985 RX-7 (12A) with carburetor. See Fig. 1.

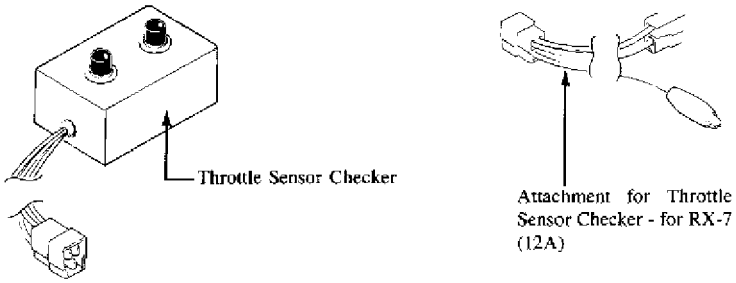

Fig. 1: RX7 Throttle Adjusting Tools

PARTS INFORMATION

PART NUMBER	DESCRIPTION
0000 41 0200	Throttle Sensor Checker & Attachment

CHECKING THROTTLE SENSOR - 1984-1985 RX-7 (13B) with E.G.I.

1. Warm up the engine to the normal operating temperature. Turn off the engine.
2. Connect the checker to the checking connector (green).
3. Turn on the ignition switch and check that one of the lamps illuminates. See Fig. 2.

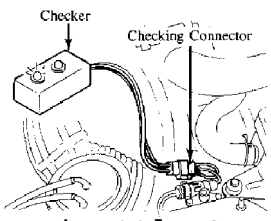

Fig. 2: RX7 Throttle Sensor Checker Hookups

Copyright © 1998 Mitchell Repair Information Company, LLC
Saturday, September 08, 2001 09:30AM

4. If both lamps illuminate or neither lamp illuminates, proceed as follows:
   * Remove the cap from the adjusting screw.
   * If both lamps illuminate turn the adjusting screw counterclockÄwise until only the red lamp illuminates. Then turn the adjusting screw an additional 1/4 turn counterclockwise.
   * If neither lamp illuminates, turn the adjusting screw clockwise until only the red lamp illuminates. Then turn the adjusting screw an additional 1/4 turn clockwise. See Fig. 3.
5. Reinstall the cap on the adjusting screw.

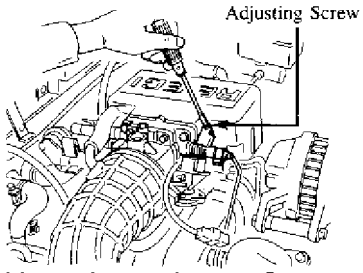

Fig. 3: Adjusting Throttle Sensor

CHECKING THROTTLE SENSOR - 1981-1985 RX-7 (12A) with carburetor

1. Warm up the engine to the normal operating temperature. Turn off the engine.
2. Disconnect the connector (brown) as shown in Fig. 4.

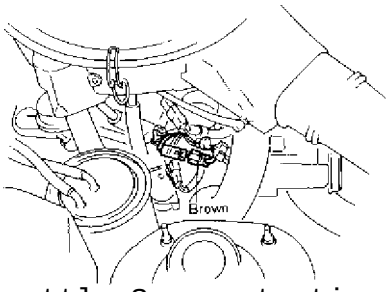

Fig. 4: Throttle Sensor testing

3. Connect the attachment for the throttle sensor checker to the checking connector as shown in Fig. 5. The color of the checking connector is:
   Green - 1984-1985 RX-7
   Black - 1981-1983 RX-7

Copyright © 1998 Mitchell Repair Information Company, LLC
Saturday, September 08, 2001 09:30AM

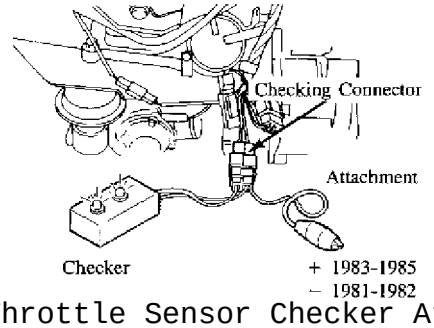

Fig. 5: Throttle Sensor Checker Attachments

4. Attach the red clip of the attachment to the battery as follows:
   + terminal - 1983-1985 RX-7
   - terminal - 1981-1982 RX-7
5. Start the engine. Raise the engine speed to 3000 rpm and release the throttle. Check that the green and red lamps illuminate at the same time.
6. If the green and red lamp do not illuminate at the same time, proceed as follows:
   * Remove the cap from the adjusting screw. See Fig. 6.
   * If the red lamp illuminates first. turn the adjusting screw counterclockwise until both lamps illuminate at the same time.
   * If the green lamp illuminates first turn the adjusting screw clockwise until both lamps illuminate at the same time.
7. Install the cap on the adjusting screw.
8. Connect the connecter (brown) disconnected in Step 2.

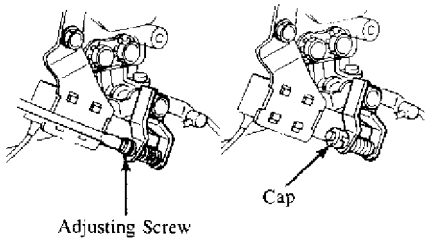

Fig. 6: Throttle Sensor Adjusting Positions

END OF ARTICLE

CALIFORNIA REFORMULATED GASOLINE CAT. F, NO. 014/96
Article Text

Copyright © 1998 Mitchell Repair Information Company, LLC
Saturday, September 08, 2001 09:30AM

ARTICLE BEGINNING

TECHNICAL SERVICE BULLETIN

CALIFORNIA REFORMULATED GASOLINE

Model(s): All Mazda Models
Category: F - Fuel & Emission Control Systems
Bulletin No.: 014/96
Date: June 6, 1996

DESCRIPTION

This bulletin is issued to provide service personnel with information to answer commonly asked questions regarding California Reformulated Gasoline (CaRFG). Please use this information to address customer concerns.

BACKGROUND

* The purpose of CaRFG is to reduce emissions.
* CaRFG replaces the traditionally high pollution generating gasoline distributed in Northern California.
* CaRFG improves the reformulated gasoline distributed in Southern California.

The California Air Resources Board (CARB) expects smog forming emissions from motor vehicles to decrease by approximately 15% due to CaRFG.

MAZDA'S POSITION ON CaRFG

* CaRFG does not affect the new vehicle or emission warranty.
* Mazda recommends the use of CaRFG as a cost effective means of reducing emissions to provide cleaner air.
* Vehicle and laboratory testing of CaRFG ensures that CaRFG is acceptable for customer use.
* Based on the above studies, no unusual vehicle performance concerns are expected.

DIFFERENCE BETWEEN CaRFG AND OTHER GASOLINES

CaRFG consists of the same basic components as other gasoline but, pollutes less due to cleaner burning components and fewer toxic components. These components provide:

* Reduced aromatic hydrocarbons to form less smog emissions.
* Added oxygenates to reduce emissions.
* Decreases the amount of vehicle fuel evaporation.
* Lower sulfur to provide more efficient catalytic converter

Copyright © 1998 Mitchell Repair Information Company, LLC
Saturday, September 08, 2001 09:30AM

operation.
* Reduced benzene by approximately 50%.

CaRFG AFFECT ON VEHICLE PERFORMANCE

Properly blended CaRFG should have no adverse affect on vehicle performance, engine durability or fuel system components. Basic components of CaRFG are not significantly different from other cleaner burning gasoline used in the United States for several years.

If the vehicle is a California calibrated 1996 or later model, the vehicle will:

* Operate satisfactorily on gasoline in the other 49 states but the emission control system performance may be effected.
* Using gasoline other then CaRFG may cause the Malfunction Indicator Light (MIL) to illuminate or cause the vehicle to fail an emission test.

CaRFG AFFECT ON FUEL ECONOMY

A very small reduction in MPG (less than one-half MPG) is possible if the customer uses gasoline without oxygenates. This is attributed to the lower energy content of oxygenates, which have been included in all Southern California gasoline since January 1995 and some gasoline since the 1970s.

NOTE: Driving habits, vehicle maintenance and weather conditions all affect fuel economy. Fuel economy may vary more than 1 MPG from one fill up to the next using the same gasoline.

NO SPECIAL ADDITIVES ARE NECESSARY WHEN USING CaRFG.

It is not necessary to add anything to the vehicle's fuel tank after CaRFG is purchased from the service station. California regulations require deposit control additives in CaRFG to avoid port fuel injector and valve deposits.

OLDER VEHICLE'S PERFORMANCE USING CaRFG

Older vehicles are expected to operate satisfactorily on CaRFG because these vehicles have been operating on gasoline similar to CaRFG for a number of years. However, considerable testing indicates that older, high mileage vehicles are more susceptible to fuel system problems due to age and normal wear and tear regardless of whether they are operated on conventional or CaRFG gasoline.

NOTE: Owners of older vehicles are encouraged to have their vehicle's fuel systems inspected periodically and to follow their vehicle manufacturers recommendations regarding vehicle maintenance.

CALIFORNIA REFORMULATED GASOLINE CAT. F, NO. 014/96
Article Text (p. 3)

Copyright © 1998 Mitchell Repair Information Company, LLC
Saturday, September 08, 2001 09:30AM

ODOR EMITTED FROM CaRFG

CaRFG is not expected to smell different from gasoline most vehicles currently use. If unusual odor is noticed, it is probably be from oxygenates. Most service stations use vapor recovery systems to minimize gasoline vapor release to the atmosphere during refueling.

ADDITIONAL INFORMATION REGARDING CaRFG

Customers can receive more information on CaRFG from the California Air Resources Board at the following toll free number: 1-800-922-7349.

END OF ARTICLE

CHOKE SYSTEM MAINTENANCE SCHEDULE/CLEANING PROCEDURE CAT. 1A, NO. 032/83
Article Text

Copyright © 1998 Mitchell Repair Information Company, LLC
Saturday, September 08, 2001 09:30AM

ARTICLE BEGINNING

TECHNICAL SERVICE BULLETIN

CHOKE SYSTEM SCHEDULED MAINTENANCE

Model: 1983 RX-7, 626, GLC
Bulletin No.: 032/83
Date: 04/07/83
Category: 1A

SUBJECT Choke System Scheduled Maintenance

DESCRIPTION

To prevent any sluggish movement of choke valve, choke system scheduled maintenance has been added as follows:

Federal Models every 15,000 miles
California Models every 45,000 miles

CHOKE SYSTEM CLEANING PROCEDURE

1. Use a cleaning agent such as STP Spray Cleaner or equivalent for cleaning.
2. Spray cleaning agent on choke linkage to remove dirt or grease. See Fig. 1.
3. Spray cleaning agent on both ends of choke shaft while moving choke valve slowly by hand.
4. Use compressed air to dry sprayed areas.
5. Apply spray lubricant such as WD-40 and move the choke lever several times to check the free movement of the choke mechanism.

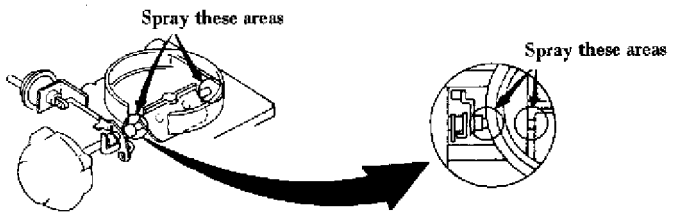

Fig. 1: Spraying Cleaner on Carburetor

END OF ARTICLE

EMISSION INSPECTION & MAINTENANCE TEST PREPARATIONS CAT. F, NO. 005/93
Article Text

Copyright © 1998 Mitchell Repair Information Company, LLC
Saturday, September 08, 2001 09:31AM

ARTICLE BEGINNING

TECHNICAL SERVICE BULLETIN

PROPER PREPARATION FOR STATE EMISSION INSPECTION AND MAINTENANCE TEST

Model All Mazda Models
Category F
Bulletin No. 005/93
Date April 28, 1993

DESCRIPTION

Some vehicles with properly functioning emission control systems may fail certain states' emission inspection and maintenance test(s) (tailpipe emission tests).
In order to avoid the above mentioned condition, make sure the following items are observed before conducting the test:

* Engine should be warmed up but not overheating (as indicated by gauge or warning light).
* All electrical loads and AC should be turned off.
* For 5-speed models: Neutral range should be selected.
* For automatic transmission models: "N" or "P" range should be selected.

NOTE: All Mazda vehicles meet the U.S. EPA and California emission standards when tested under the EPA certification test procedure.

PREPARATION PROCEDURE

Perform the following before conducting the emission inspection and maintenance test:

1. Before testing, bring the engine's operating temperature to normal by operating the engine for approximately 3 minutes at 2,500-3,000 rpm.

NOTE: When the cooling fan has cycled on and off twice, the engine has reached its normal operating temperature.

2. Test the vehicle as soon as possible after the engine has warmed up. Keep the engine at operating temperature during the test.

END OF ARTICLE

PARTS BULLETIN - SPARK PLUG COIL/WIRE SET NO. T-1-6
Article Text

Copyright © 1998 Mitchell Repair Information Company, LLC
Saturday, September 08, 2001 09:31AM

ARTICLE BEGINNING

TECHNICAL SERVICE BULLETIN

SPARK PLUG COIL/WIRE SET

Model(s): All Mazda Models Through 1995
Category: Parts Bulletin
Bulletin No.: T-1-6
Date: November 1, 1990
Revised: April, 24 1995

DESCRIPTION

A complete line of Mazda Spark Plug Wire Sets are available from your servicing PDC. These high-quality wire sets are manufactured for Mazda by NGK.

Each wire set includes the coil/wire(s) and is attractively packaged for merchandising purposes. The carton can be placed on a wall display. The part number and model applications are clearly indicated on the front and on the end of the carton. Each wire is numbered for easy installation and the instructions are printed on the back.

Complete wire sets cannot be used for new vehicle warranty. Individual wires are available under the MC part numbers, as indicated in the Parts Catalog Microfiche.

PARTS INFORMATION

PART NUMBERS AND APPLICATIONS TABLE

Year/Model	NGK P/N	Mazda P/N
1971-74 RX-2	RC-ZE91	0000-18-091A
1972-78 RX-3	RC-ZE91	0000-18-091A
1974-78 RX-4	RC-ZE91	0000-18-091A
1976-78 Cosmo	RC-ZE91	0000-18-091A
1974-77 Repu	RC-ZE91	0000-18-091A
1975-77 808 (1600CC)	RC-ZE92	0000-18-092A
1976-77 808 (1300CC)	RC-ZE92	0000-18-092A
1977-80 GLC	RC-ZE92	0000-18-092A
1981-83 GLC Wagon	RC-ZE92	0000-18-092A

PARTS BULLETIN - SPARK PLUG COIL/WIRE SET NO. T-1-6
Article Text (p. 2)

Copyright © 1998 Mitchell Repair Information Company, LLC
Saturday, September 08, 2001 09:31AM

1972-74 808 (1600CC)	³	RC-ZE94A	³	0000-18-094A
1972-74 B1600	³	RC-ZE94A	³	0000-18-094A
1977-78 B1800	³	RC-ZE94A	³	0000-18-094A
1979-84 B2000	³	RC-ZE94A	³	0000-18-094A
1979-82 626	³	RC-ZE94A	³	0000-18-094A
1979-85 RX-7	³	RC-ZE97	³	0000-18-097B
1981-85 GLC FWD	³	RC-ZE98	³	0000-18-098A
1986-87 323	³	RC-ZE98	³	0000-18-098A
1983-87 626 FWD	³	RC-ZX99A	³	0000-18-099A
1983-87 B2000	³	RC-ZX99A	³	0000-18-099A
1986-91 RX-7 (All Models)	³	RC-ZE02	³	0000-18-100A
1987-93 B2600	³	RC-ME51	³	0000-18-101A
1988-89 323 (Turbo)	³	RC-ZE07	³	0000-18-102A
1988-91 929 (Except S)	³	RC-ZE06	³	0000-18-103A
1989-94 MPV (3.0L)	³	RC-ZE06	³	0000-18-103A
1987-93 B2600i (2.6L)	³	RC-ZE17	³	0000-18-104A
1989-94 MPV (2.6L)	³	RC-ZE17	³	0000-18-104A
1988-92 626/MX-6	³	RC-ZX12	³	0000-18-105A
1987-93 B2200	³	RC-ZE94A	³	0000-18-094A
1990-94 Protege (1.8L/DOHC)	³	RC-ZX18	³	0000-18-118A
1988-94 323/Protege	³	RC-ZX19	³	0000-18-119A
(1.6L & 1.8L SOHC)	³		³	
MX-3 (1.6L)	³		³	
1990-95 Miata	³	RC-ZE21	³	0000-18-121A
1990-91 929S	³	RC-ZX22	³	0000-18-122A
1992-93 MX-3 (1.3L)	³	RC-ZE25	³	0000-18-125A
1992-95 929	³	RC-ZE26	³	0000-18-126A

PARTS BULLETIN - SPARK PLUG COIL/WIRE SET NO. T-1-6
Article Text (p. 3)

Copyright © 1998 Mitchell Repair Information Company, LLC
Saturday, September 08, 2001 09:31AM

1991-93 Navajo	-	ZZLO-18-140
19993-94 626/MX-6 2.5L	RC-ZE28	0000-18-128A
1995 626 2.5L	RC-ZE32	0000-18-132A
1993-94 626/MX-6 2.0L	RC-ZX29	0000-18-129A
1995 626 2.0L (A/T)	RC-ZX40	0000-18-140A
1995 626/MX-6 2.0L (M/T)	RC-ZX41	0000-18-141A
1993-95 RX7	RC-ZE30	0000-18-130A
1995 Millenia	RC-ZE31	0000-18-131A
1995 MX-3 (1.8L)	RC-ZE35	0000-18-135A
1995 MX-3 (1.6L)	RC-ZE36	0000-18-136A
1995 Protege (1.8L)	RC-ZE36	0000-18-136A
1995 Protege (1.5L)	RC-ZE37	0000-18-137A

END OF ARTICLE

RECOMMENDED FUEL CAT. 4, NO. 054/89
Article Text

Copyright © 1998 Mitchell Repair Information Company, LLC
Saturday, September 08, 2001 09:31AM

ARTICLE BEGINNING

TECHNICAL SERVICE BULLETIN

USE OF REGULAR UNLEADED GASOLINE

Models	ALL MODELS
Bulletin No.	054/89
Category	4
Date	2/20/89

DESCRIPTION

It is recommended that REGULAR UNLEADED gasoline be used in all Mazda vehicles NOT equipped with a turbocharger. All non-turbocharged Mazda vehicles are designed to perform best when REGULAR UNLEADED fuel is used.

Due to the low volatility of some SUPER UNLEADED fuels, an overlean air-fuel condition may occur especially when cold. This may result in start and driveability problems.

We urge you to NOT recommend the use of SUPER UNLEADED gasoline to your customers. Also, if a customer complains about a rough idle after starting, inquire as to what type of fuel the customer has been using as a first step in troubleshooting.

END OF ARTICLE

RX-7 OIL REPLACEMENT TIP
Article Text

Copyright © 1998 Mitchell Repair Information Company, LLC
Saturday, September 08, 2001 10:02AM

ARTICLE BEGINNING

TECHNICAL INFORMATION TIP

RX-7 OIL FILTER REPLACEMENT

YEAR(S): All RX-7 Engines
MANUFACTURER: Mazda
MODELS: RX-7

ISSUE: OIL FILTER REPLACEMENT

The oil filter is mounted face down on Mazda RX-7 engines. This makes filter replacement an unnecessarily messy job. To cut down on the spilled oil, punch two holes in the top of the filter to let the filter drain into the crankcase. Remove the drain plug, then let the filter drain while the crankcase drains. Now you can remove an empty filter rather than a full one (due to the check valve inside the filter). No more mess filters dripping all over the top of the engine.

Courtesy of Import Service Magazine
with thanks to:

A.J. Diamant
LMT Auto Repair
Columbia, Maryland

REFERENCE NUMBER: MAZ0045AP

NOTE: This information has been obtained from sources generally believed to be reliable. Use your own judgment before relying on this data. Neither the suppliers of these Technical Information Tips, nor Mitchell International, guarantees or assumes responsibility for data accuracy or completeness, nor is liability assumed by the suppliers of these Technical Information Tips or Mitchell International for any claims or damages resulting from the use of this information.

END OF ARTICLE

SPARK PLUG CROSS-REFERENCE CHART NO. T-1-3
Article Text

Copyright © 1998 Mitchell Repair Information Company, LLC
Saturday, September 08, 2001 09:31AM

ARTICLE BEGINNING

TECHNICAL SERVICE BULLETIN

SPARK PLUG CROSS-REFERENCE CHART

Model: All Mazda
Date: November 1, 1990 (Revised - April 27, 1992)
No: T-1-3
Group: Parts

SPARK PLUGS FOR PISTON ENGINES

YEAR	MODEL	NGK P/N	MAZDA P/N	BLISTER PACK
1992	MX-3 1.8L, V-6	BKR6E11	BP03-18-110	-
1992	MX-3 (1.6L)	BKR5E11	BPO1-18-110	-
1992	929 COLD TYPE	BKR6EVX11	JE43-18-110	-
1992	929 STD. TYPE	BKR5EVX11	JE41-18-110	-
1988-91	929/929S	ZFR6A11	F201-18-110	-
1989	MPV	ZFR6A11	F201-1B-110 (Prod. 8701-9623)	-
		ZFR6E11	F285-18-110 (Prod. 9623-9B01)	-
1990-92	MPV	ZFR5F11	F287-18-110	-
1993	MX6/626 (4CYL.) (STD TYPE)	BKR5E11	BP01-18-110	-
1993	MX6/626 (4CYL.) (COLD TYPE)	BKR6E11	BP03-18-110	-
1993	MX6/626 (V6) (STD TYPE)	ZFR5F11	F287-18-110	-
1993	MX6/626 (V6)	ZFR6E11	F285-18-110	-
1988-92	MX-6/626	ZFR6A11	F201-18-110	-
1979-82	626	BP5ES	0660-18-110	8AG1-18-110A-BP
1979-87	626	BPR5ES*	8914-18-110	8AB1-18-110A-BP
1986-87	626 (Turbo)	BPR6ES	1690-18-110	-
1990-92	MIATA	BKR6E11	BP03-18-110	-
1986-92	323	BPR5ES11*	B601-18-110	-
1990-92	PROTEGE SOHC 1.8L	BKR5E11	BP01-18-110	-
1990-92	PROTEGE DOHC 1.8L	BKR6E11	BP03-18-110	-
1988-89	323 (Turbo)	BCPR6E11*	F220-18-110	-
1987-88	323 (Wagon)	BPR5ES11*	B601-18-110	-
1987-92	B2200	BPR5ES	8914-18-110	8AB1-18-110A-BP
1987-88	B2600	BPR6ES11*	B601-18-110	-
1989-92	B2600i	ZFR6A11*	F201-18-110	-
1977-79	GLC	BP6ES	025G-18-110	8AU1-18-110A-BP
1977-79	GLC	BPRBES*	1BG0-18-110	-
1977-80	GLC	BP5ES	0660-18-110	8AG1-18-110A-BP
1977-85	GLC	BPR5ES*	8G14-18-110	8AB1-18-110A-BP

SPARK PLUG CROSS-REFERENCE CHART NO. T-1-3
Article Text (p. 2)

Copyright © 1998 Mitchell Repair Information Company, LLC
Saturday, September 08, 2001 09:31AM

1979-80	GLC (Wagon)	BP5ES	0660-18-110	8AG1-18-110A-BP
1980-83	GLC (Wagon)	BPR5ES *	8G14-18-110	8AB1-18-110A-BP
1986				
1972-77	808	BP7ES	0745-18-110	-
1976	808 (1300)	BP6ES13	3710-18-110	-
1977	808 (1300)	BPR6ES *	1690-18-110	-
1972-77	808 (1600)	BP6ES	0259-18-110	8AU1-18-110A-BP
1972-76	B1600	BP6ES	0259-18-110	8AU1-18-110A-BP
1972-76	B1600	BP7ES	0745-18-110	-
1977-78	B1800	BP6ES	0259-18-110	8AU1-18-110A-BP
1979	B2000	BPR5ES *	8914-18-110	8AB1-18-110A-BP
1981-87				
1980-81	B2000	BPRBES *	1690-18-110	-
1970	1500	BP7ES	0745-18-110	-
1970-72	1800	BP7ES	0745-18-110	-
1971	616	BP7ES	0745-18-110	-
1972-73	618	BP7ES	0745-18-110	-

* = Resistor Plug

1974-76	REPU	B7EM	2328-18-600	8AH1-18-110A-BP
1977	REPU	B7ET	3743-18-600	8AF1-18-110A-BP
1971-74	RX-2	B7EM	2328-18J600	8AH1-18-1 10A-BP
1972-75	RX-3	B7EM	2328-18-600	8AH1-18-1 10A-BP
1976	RX-3	BR7ET *	3648-18-600	-
1977-78	RX-3	B7ET	3743-18-600	8AF1-18-110A-BP
1972-78	RX-3	B8EM	2359-18-600	-
1974-75	RX4	B7EM	2328-18-600	8AH1-18-11OA-BP
1974-78	RX4	BR7EM	2182-18-600	-
1974-78	RX4	B7EMV	1757-18-600	-
1976-78	RX4	B7ET	3743-18-600	8AF1-18-1110A-BP
1976-78	RX4	BR7ET	3648-18-600	-
1976-78	RX4	BR8ET *	3649-18-600	8AF3-18-110A-BP
1979	RX-7	B7ET	3743-18-600	8AF1-18-110A-BP
1979	RX-7	BR7ET	3648-18-600	-
1980	RX-7	BR8ET	3649-18-600	8AF3-18-110A-BP
1980	RX-7	BR9ET	8344-18-600	-
1981-85	RX-7	BR8EQ14	N201-18-600	8AF2-18-110A-BP
1984-85	RX-7	BR9EQ14	N203-18-600	-
1986-91	RX-7 (Leading)	BUR7EQ	N343-18-110	N3X4-18-110
1986-91	RX-7 (Trailing)	BUR9EQ	N342-18-110	N3X4-18-110
1993	RX-7 (Leading)	BUR7EQP	N3A2-A8-110	N3X5-18-110
1993	RX-7 (Trailing)	BUR9EQP	N3A1-18-110	N3X5-18-110

(See Fig. 1).

SPARK PLUG CROSS-REFERENCE CHART NO. T-1-3
Article Text (p. 3)

Copyright © 1998 Mitchell Repair Information Company, LLC
Saturday, September 08, 2001 09:31AM

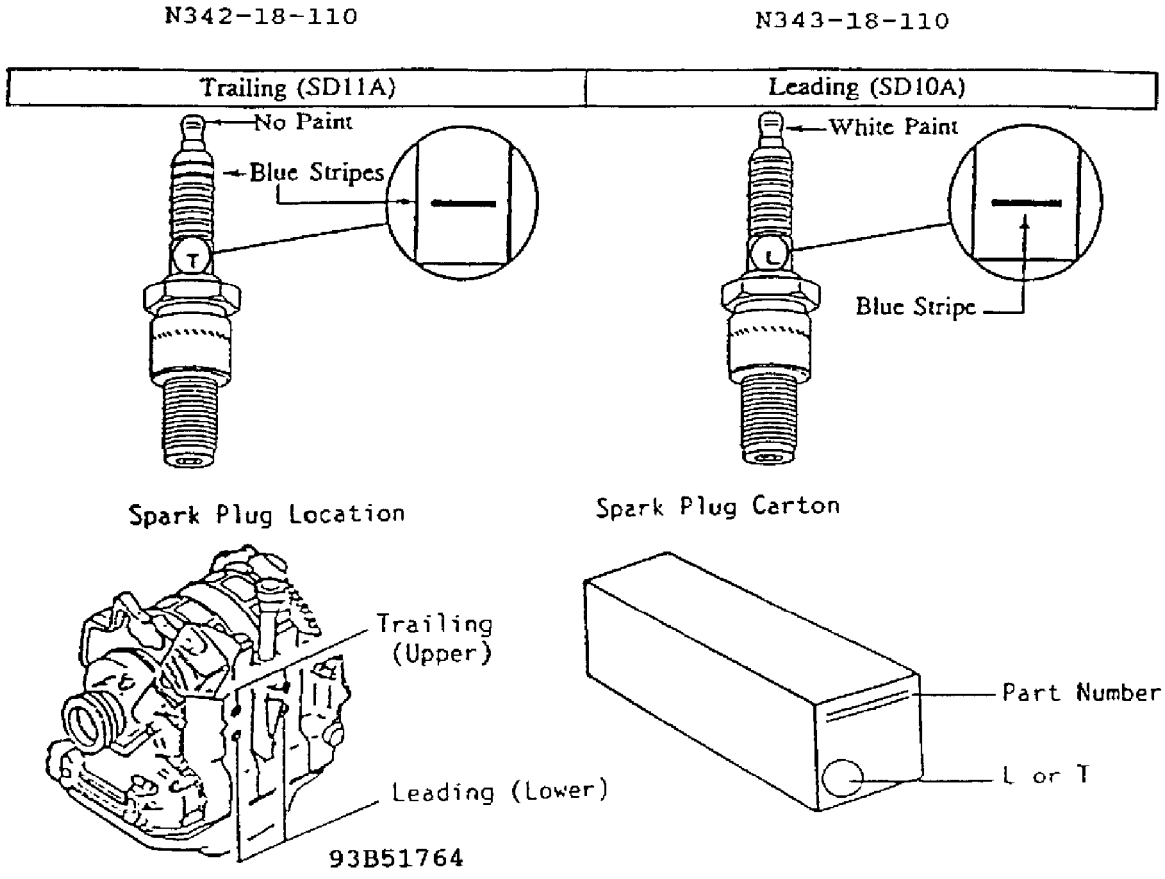

Fig. 1: Spark Plug Identification for 1986-91 RX-7 Engines

END OF ARTICLE

TAS (THROTTLE ADJUSTMENT SCREW) LOCATION/ADJUSTMENT CAT. F, NO. 014/98
Article Text

Copyright © 1998 Mitchell Repair Information Company, LLC
Saturday, September 08, 2001 09:32AM

ARTICLE BEGINNING

TECHNICAL SERVICE BULLETIN

TAS (THROTTLE ADJUSTMENT SCREW) ADJUSTMENT

Model(s): All Mazda Models with Fuel Injection
Category: F (01) - Fuel & Emission Control
Bulletin No.: 014/98
Date: December 9, 1998

VEHICLES AFFECTED

All fuel injected models.

DESCRIPTION

Fuel injected vehicles with idle speed control motors should NOT have the TAS (Throttle Adjustment Screw) adjusted for any reason. The TAS functions as a stopper when the throttle valve is fully closed. During production, the TAS is accurately set by measuring the airflow rate past a closed throttle plate. Any adjustment to this screw will affect PCM control of idle speed.

Customers complaining of low idle speed should have their vehicle repaired using the Workshop Manual.

NOTE: * Tampering with this screw will affect the idle contact switch and/or throttle position sensor settings. This can lead to rough idle and difficulty in diagnosis of idle quality concerns.

* The TAS locations on the examples below may vary depending on model year of vehicle. See Fig. 1.

TAS (THROTTLE ADJUSTMENT SCREW) LOCATION/ADJUSTMENT CAT. F, NO. 014/98
Article Text (p. 2)

Copyright © 1998 Mitchell Repair Information Company, LLC
Saturday, September 08, 2001 09:32AM

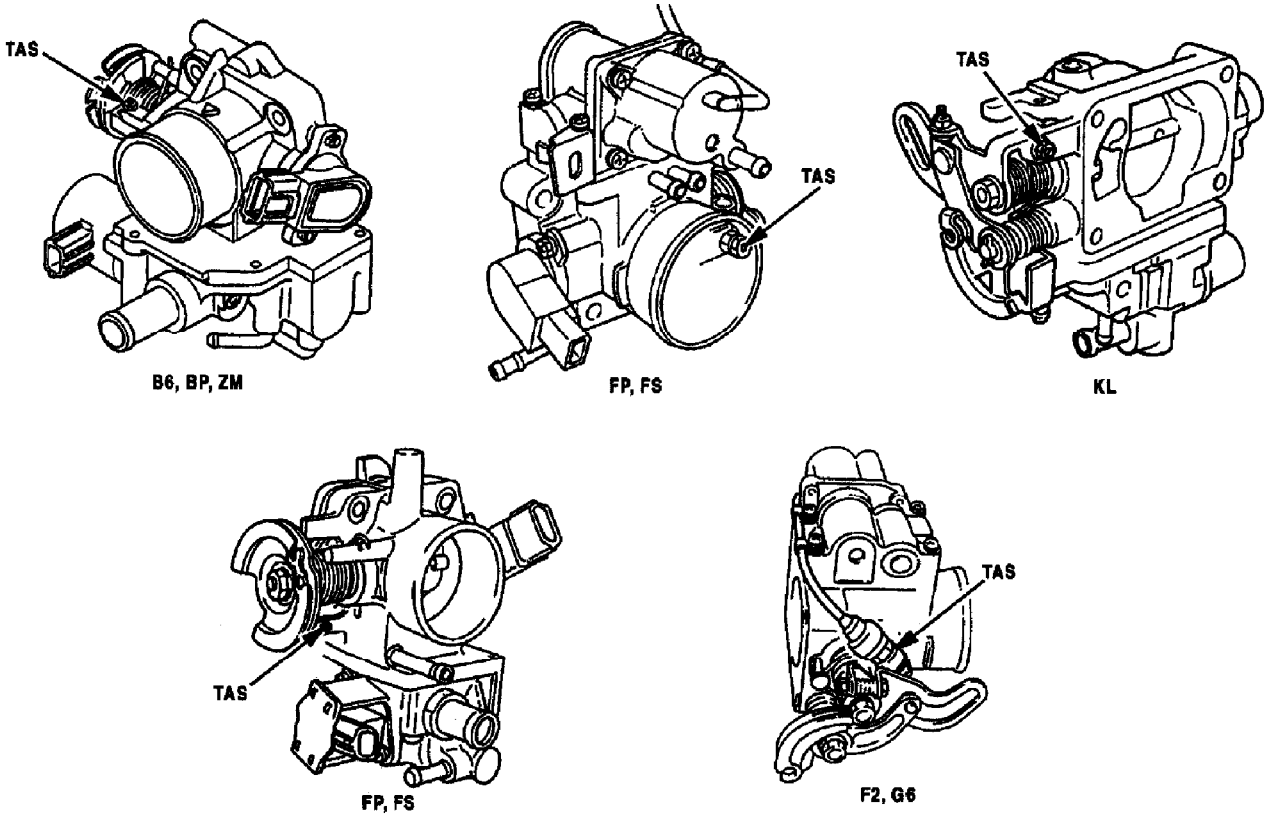

98B54057
Fig. 1: Throttle Adjustment Screw Locations

END OF ARTICLE

WHISTLE NOISE FROM CHECK &CUT VALVES - REPL VALVES CAT. 4, NO. 015/85
Article Text

Copyright © 1998 Mitchell Repair Information Company, LLC
Saturday, September 08, 2001 09:32AM

ARTICLE BEGINNING

TECHNICAL SERVICE BULLETIN

APPLICATION

1980-85 RX7 & 1981-85 GLC

SUBJECT

Whistle Noise From Check & Cut Valve

REFERENCE

Mazda Motors Corp., Service Bulletin, No. 4 015/85, September, 1985

CONDITION & CAUSE

Some 1980-85 RX7 and 1981-85 GLC vehicles may exhibit a whistle noise from the check and cut valve. The whistle noise is most noticeable at high temperature and low fuel level, and can be heard from the rear of the vehicle.

REPAIR

Replace the check and cut valve with the new service component (RX7 - 8341-42-910, GLC - BA01-42-910).

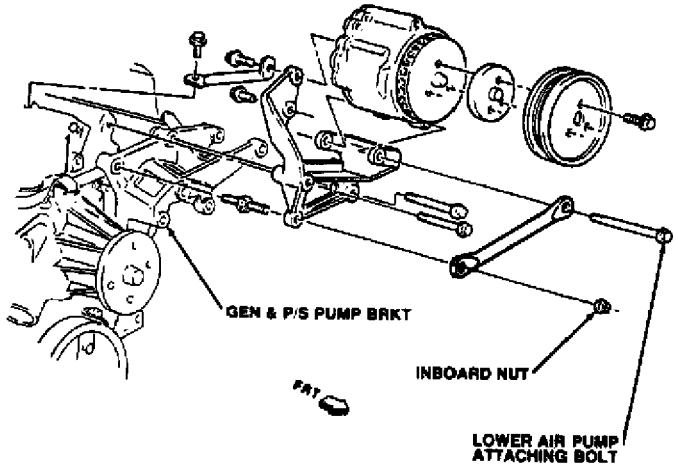

Fig. 1: Anything Installation

END OF ARTICLE

1.2/1.3L ENG CLUTCH CHATTER/JUDDER - NEW DISC CAT. 6, NO. 003/86
Article Text

Copyright © 1998 Mitchell Repair Information Company, LLC
Saturday, September 08, 2001 09:42AM

ARTICLE BEGINNING

TECHNICAL SERVICE BULLETIN

APPLICATION

1983-86 RX7

SUBJECT

Clutch Chatter/Judder

REFERENCE

Mazda Motors Corp., Service Bulletin, No. 6 003/86, April, 1986

CONDITION & CAUSE

Some 1983-86 RX7 vehicles may exhibit clutch chatter/judder. This condition may be caused by the clutch disc.

REPAIR

To repair the above mentioned complaint, install a new service clutch disc.

NEW SERVICE COMPONENT APPLICATION & PART NUMBER

Application	Part Number
Clutch Disc	
1983-85 (12A)	N203 16 460B
1984-85 (13B), 1986	N303 16 460

END OF ARTICLE

1.3L ENG CLUTCH VIB - REPL FLYWHEEL ALIGNMENT PINS CAT. 6, NO. 002/86
Article Text

Copyright © 1998 Mitchell Repair Information Company, LLC
Saturday, September 08, 2001 09:43AM

ARTICLE BEGINNING

TECHNICAL SERVICE BULLETIN

CLUTCH ALIGNMENT PINS

Models	1983-86 RX-7
Bulletin No.	002/86
Category	6
Date	4/8/86
Symptom	Clutch Vibration

DESCRIPTION

Replacement flywheels for the 1983-1986 RX-7 are shipped without clutch alignment pins. These pins are necessary to accurately align the clutch cover to the flywheel during assembly. Failure to use the alignment pins will result in vibration of the flywheel and clutch assembly. See Fig. 1.

When replacing the flywheel, please order the pin by the part number listed below.

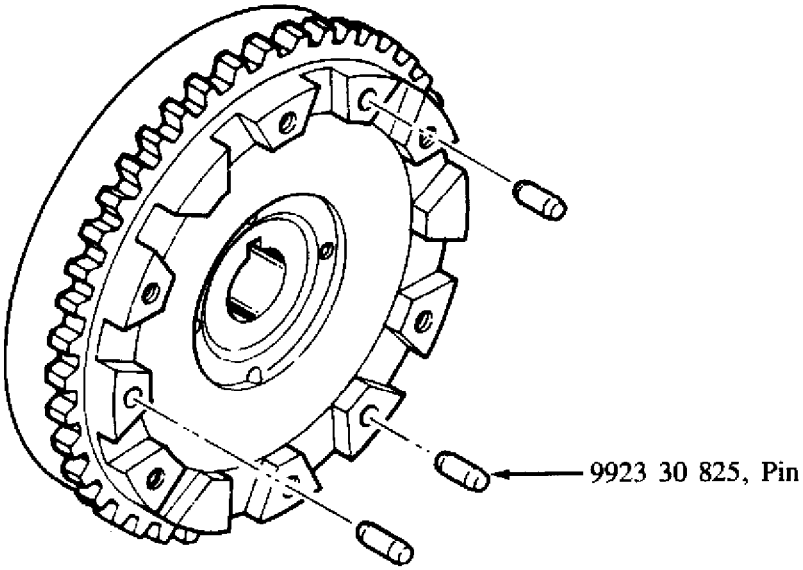

Fig. 1: 83-86 RX7 Flywheel and Alignment Pins

PARTS INFORMATION

PART NUMBER	DESCRIPTION	QTY
9923 30 825	Knock Pin	3

END OF ARTICLE

HARD SHIFT TO 2ND GEAR AFTER COLD START - NEW PARTS CAT. J, NO. 004/92
Article Text

Copyright © 1998 Mitchell Repair Information Company, LLC
Saturday, September 08, 2001 09:43AM

ARTICLE BEGINNING

TECHNICAL SERVICE BULLETIN

HARD SHIFT TO 2ND GEAR AFTER COLD START

Model(s): 1980-91 Mazda RX-7 (non-turbo)
1990-91 Mazda Miata
Category: J
Bulletin No.: 004/92
Date: 7/7/92

DESCRIPTION

Hard shifting into second gear before the vehicle has had sufficient time to warm up may be caused by insufficient clearance between 2nd gear synchronizer ring and the 1-2 clutch hub. Design changes have been made to the 2nd gear synchronizer ring and clutch hub sleeve to correct this problem since April 1, l99l .

If you experience hard shifting into 2nd gear after a cold start with an RX-7 (non-turbo) or Miata produced prior to April 1, 1991, replace the 2nd gear synchronizer ring and 1-2 clutch sleeve (or 1-2 clutch hub set) with redesigned ones. Refer to the appropriate service information for installation procedures.

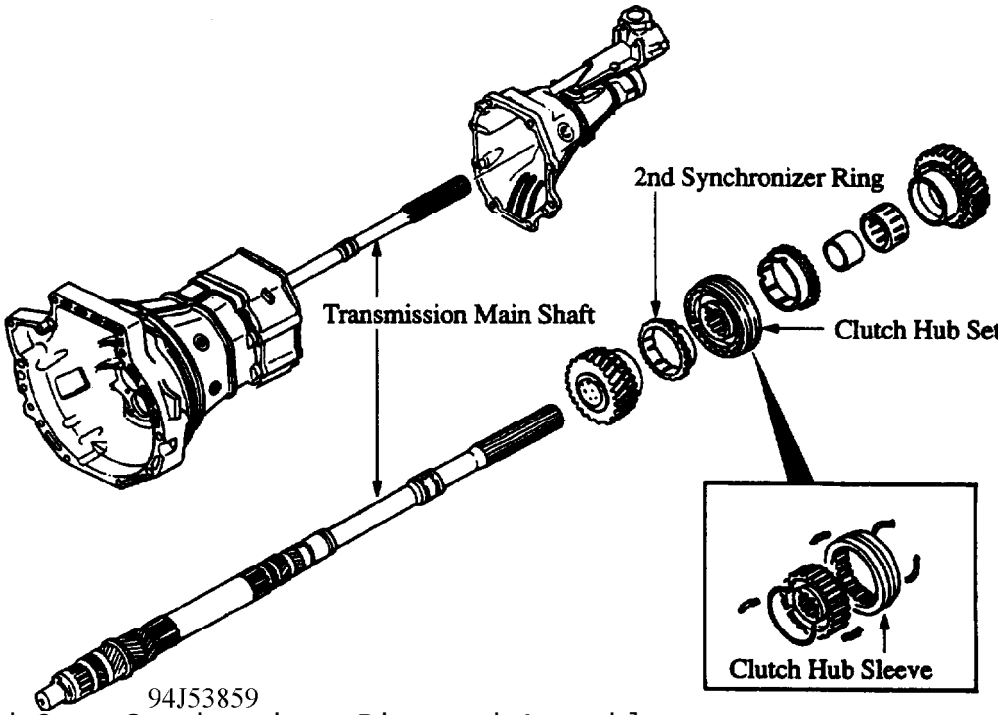

Fig. 1: 2nd Gear Synchronizer Ring and Assembly

VIN OF PRODUCTION CHANGE

HARD SHIFT TO 2ND GEAR AFTER COLD START - NEW PARTS CAT. J, NO. 004/92
Article Text (p. 2)

Copyright © 1998 Mitchell Repair Information Company, LLC
Saturday, September 08, 2001 09:43AM

MX-5 Miata	JM1NA351*M*232720	April 1, 1991
RX-7 (non-turbo)	JM1FC3***M0906971	April 1, 1991

PARTS INFORMATION TABLE

Part Number		Description	Qty	Interchange -ability
New	Old			
M502 17 265C	M502 17 265B	2nd Synchronizer Ring	1	New-Old
M503 17 262A	M503 17 262	1-2 Clutch Hub Sleeve	1	New-Old
M505 17 260B	M505 17 260A	1-2 Clutch Hub Set	1	New-Old

WARRANTY INFORMATION

(Applies to Vehicles Covered Under Warranty.)

Warranty Type Code:	A	
Customer Comment Code:	99	
Damage Code:	99	
Part No. of Main Cause:	M502 17 265C (Qty. 1)	
Related Parts:	M503 17 262A (Qty. 1)	
	M505 17 260B (Qty. 1)	
	Miata	RX-7
Operation No:	J0315XRX	J0315ARX
Labor Hours:	5.2 Hrs.	5.1 Hrs

END OF ARTICLE

IMPROVED SPEEDO GEAR SLEEVE TO ELIMINATE LEAKS CAT. 7, NO. 027/87
Article Text

Copyright © 1998 Mitchell Repair Information Company, LLC
Saturday, September 08, 2001 09:43AM

ARTICLE BEGINNING

TECHNICAL SERVICE BULLETIN

SPEEDOMETER DRIVEN GEAR SLEEVE

Model: ALL MODELS
Bulletin No.: 027/87
Date: 3/11/87
Category: 7

DESCRIPTION
In order to improve the sealing ability of the joint between the speedometer cable and driven gear sleeve, the shape of the driven gear sleeve has been changed as shown In addition, the shape of the gasket for the 323 has also been changed. These modifications were made on the production line since November 1, 1986.

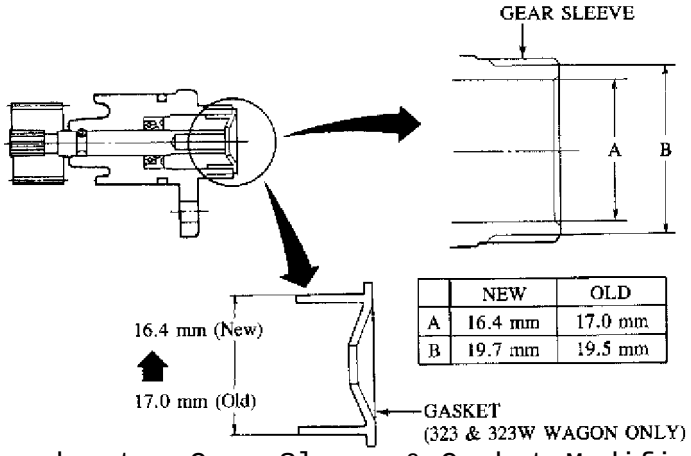

Fig. 1: Speedometer Gear Sleeve & Gasket Modifications

VIN OF PRODUCTION

323	4-Door Sedan	JM1BF222	
	3-Door Hatch	JM1BF232	H0528227
	S-Door Hatch	JM1BF242	
	J Wagon	JM1BW622	H0507406
626	4-Door Sedan (Non-Turbo)	JM1GC221	
	4-Door Sedan (Turbo)	JM1GC223	
	S-Door Hatch (Non-Turbo)	JM1GC241	H1140384
	S-Door Hatch (Turbo)	JM1GC243	
	2-Door Coupe (Non-Turbo)	JM1GC311	
	2-Door Coupe (Turbo)	JM1GC313	
RX-7	Non-Turbo	JM1FC331	H0522333
	Turbo	JM1FC332	
B2000	Short Bed	JM2UF111	

IMPROVED SPEEDO GEAR SLEEVE TO ELIMINATE LEAKS CAT. 7, NO. 027/87
Article Text (p. 2)

Copyright © 1998 Mitchell Repair Information Company, LLC
Saturday, September 08, 2001 09:43AM

Long Bed	JM2UF211	H0603331
Cab Plus	JM211311	

PARTS INFORMATION

NEW PART NO.	OLD PART NO.	DESCRIPTION	APPLIED MODEL
F401 17 442A	F401 17 442	Speedometer Sleeve	323, 323W
1669 17 442B	1669 17 442A	Speedometer Sleeve	RX-7, B2000
G471 17 442A	G471 17 442	Speedometer Sleeve	626
		Speedometer Guide	
B092 60 076A	B092 60 076	Seal Gasket	323 323W

END OF ARTICLE

M & R TYPE TRANS HARD SHIFT COLD - NEW GEAR OIL CAT. 7, NO. 062/89
Article Text

Copyright © 1998 Mitchell Repair Information Company, LLC
Saturday, September 08, 2001 09:43AM

ARTICLE BEGINNING

TECHNICAL SERVICE BULLETIN

HARD SHIFT IN LOW TEMPERATURE

Models RX-7, 929 & B-Series (M/T)
Bulletin No. 062/89
Category 7
Date 6/6/89
Symptom Hard Shift in Low Temperature

DESCRIPTION

In order to improve shift feeling on manual transmission in low temperature, the gear oil has been changed to SAE75W-90 as shown below.

	Previous Oil		Current Oil
RX-7	SAE80W-90	ÄÄ>	SAE75W-90
929	SAE75W-80	ÄÄ>	SAE75W-90
B2200	SAE75W-80	ÄÄ>	SAE75W-90
B2600	SAE75W-80	ÄÄ>	SAE75W-90

VIN OF PRODUCTION CHANGE

RX-7:	JM1FC****	10626727	July 9, 1988
929:	JM1HC****	K0200684	July 9, 1988
B2200:	JM2UF113*	J0401564	July 9, 1988
	JM2UF213*	J0401564	July 9, 1988
	JM2UF313*	J0401564	July 9, 1988
B2600i:	JM2UF414*	K0746274	November 15, 1988
	JM2UF416*	K0746274	November 15, 1988

If you encounter vehicles which were produced before the modificaÄtion and have the problem mentioned above, replace the gear oil with SAE75W-90.

NOTE: Do not mix engine oil or ATF into transmission gear oil. Also, do not use it instead of manual transmission gear oil since it may result in scoring of the gears and premature wear of shift rods.

END OF ARTICLE

MANUAL TRANS NEW BEARING COVER BOLTS/TORQUE CAT. 7, NO. 002/84
Article Text

Copyright © 1998 Mitchell Repair Information Company, LLC
Saturday, September 08, 2001 09:43AM

ARTICLE BEGINNING

TECHNICAL SERVICE BULLETIN

MODIFICATION OF BEARING COVER BOLTS

Model: B2000, B2200, & RX-7
Bulletin No.: 002/84
Date: 3/28/84
Category: 7

DESCRIPTION

The bolts attaching the transmission bearing cover have been strengthened and the tightening torque has been increased to improve the durability of the transmission.

BOLT INFORMATION TABLE
**ÄÄÄ

MANUAL TRANS NEW BEARING COVER BOLTS/TORQUE CAT. 7, NO. 002/84
Article Text (p. 2)

Copyright © 1998 Mitchell Repair Information Company, LLC
Saturday, September 08, 2001 09:43AM

RX-7	12A:	JM1FB331 E0819695	February, 1984
	13B:	JM1FB332 E0819695	February, 1984

PARTS INFORMATION

NEW PART NO.	OLD PART NO.	DESCRIPTION	QTY	INTERCHANGEABILITY
9078 12 820	9080 12 820	Bolt	5	NEW = OLD

END OF ARTICLE

MANUAL TRANSMISSION SHIM ADJUSTMENTS CAT. J, NO. 001/90
Article Text

Copyright © 1998 Mitchell Repair Information Company, LLC
Saturday, September 08, 2001 09:44AM

ARTICLE BEGINNING

TECHNICAL SERVICE BULLETIN

MANUAL TRANSMISSION SHIM ADJUSTMENTS

Model: Mazda 1981-90 RX-7 & B-Series, 1988-90 929, 1999-90 MPV, 1990 MX-5 Miata
Date: March 2, 1990
No: 001/90
Group: J

DESCRIPTION
On vehicles (1981-90 RX7 and B-Series, 1988-90 929, 1989-90 MPV, 1990 MXS) with rear-wheel-drive and manual transmissions, the shim adjustments of 5th gear and the mainshaft rear bearing have been changed.

This bulletin contains the new shim adjustment procedures.

There are different shim adjustment procedures or Type-M and Type-R manual transmissions. Use the chart in Fig. 1 to reference the correct type of transmission.

MANUAL TRANSMISSION SHIM ADJUSTMENTS CAT. J, NO. 001/90
Article Text (p. 2)

Copyright © 1998 Mitchell Repair Information Company, LLC
Saturday, September 08, 2001 09:44AM

MANUAL TRANSMISSION APPLICATION CHART

Model	Type	'81	'82	'83	'84	'85	'86	'87	'88	'89	'90
RX-7	M	○	○	○	○	○	○	○	○	○	○
	R	—	—	—	—	—	—	○	○	○	○
B2000	M	○	○	○	○	—	○	—	—	—	—
	R	—	—	—	—	—	—	—	—	—	—
B2200	M	—	○	○	○	—	—	○	○	○	○
	R	—	—	—	—	—	—	—	—	—	—
B2600	M	—	—	—	—	—	—	—	—	—	—
	R	—	—	—	—	—	—	○	○	○	○
929	M	—	—	—	—	—	—	—	—	—	—
	R	—	—	—	—	—	—	—	○	○	—
MX-5	M	—	—	—	—	—	—	—	—	—	○
	R	—	—	—	—	—	—	—	—	—	—
MPV	M	—	—	—	—	—	—	—	—	—	—
	R	—	—	—	—	—	—	—	—	○	○

○ = Equipped 93J51770

Fig. 1: Manual Transmission Application Chart

1. Install the synchronizer ring and 5th gear.
2. Insert the steel ball and thrust washer.
3. Install only the two 3.0mm (0.118 in) thick "C", washers in the front mainshaft groove and hold them with the retaining ring. See Figure 2.

Copyright © 1998 Mitchell Repair Information Company, LLC
Saturday, September 08, 2001 09:44AM

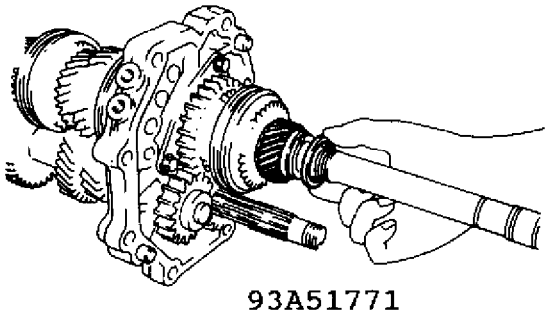

Fig. 2: Retaining Ring Installation (M-Type)

Note: If the "C" washers are not pushed fully forward in the mainshaft groove the measurement will be incorrect.

4. While pushing the "C" washers forward, measure the clearance between the thrust washer and "C" washers. (See Fig. 3).

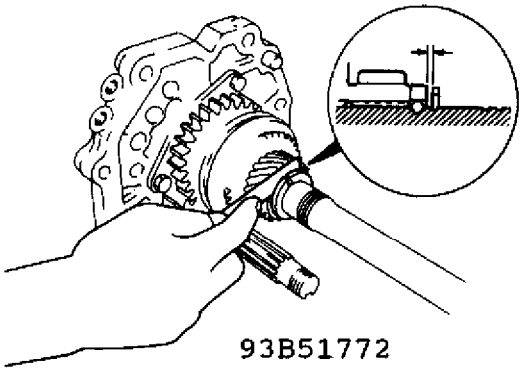

Fig. 3: Measuring Clearance Between Thrust Washer & "C" Washer (M-Types)

If the clearance is not as specified select the proper thrust washer.
Standard Clearance: Refer to the appropriate Service Information for the vehicle being repaired.

MAINSHAFT REAR BEARING

1. Drive on the mainshaft rear bearing using he SST, fully seating it against the front "C" washers. See Fig. 4.

2. Install the original "C" washers and hold them with the retaining ring.

Copyright © 1998 Mitchell Repair Information Company, LLC
Saturday, September 08, 2001 09:44AM

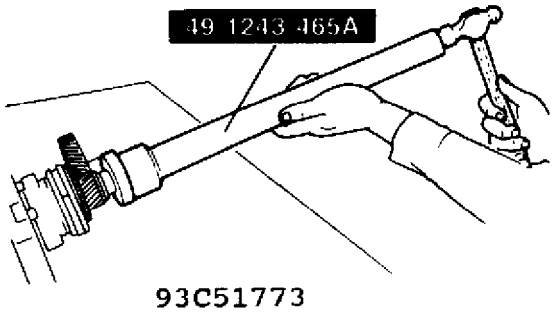

Fig. 4: Installing Rear Bearing (M-Types)

NOTE: If the "C" washers will not fit into the rear mainshaft groove, select the proper thickness "C" washers. Ensure both "C" washers at this position are the same thickness.

3. Measure the clearance between the "C" washers and mainshaft rear bearing. See Fig. 5. If the clearance is not as specified, select the proper "C" washers.

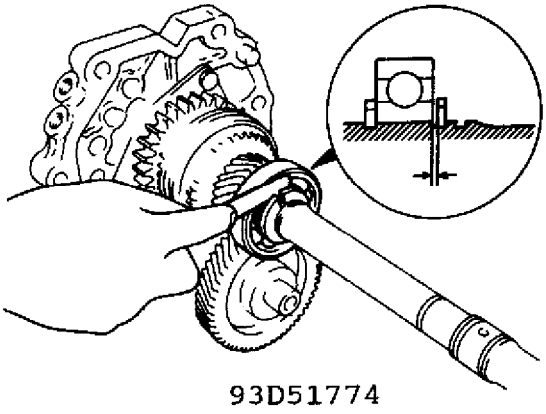

Fig. 5: Measuring Clearance Between "C" Washer & Rear Bearing (M-Type)

Standard Clearance: Refer to the appropriate Service Information for the vehicle being repaired.

R-TYPE
5th Gear
1. Install the synchronizer ring and 5th gear.
2. Install the steel ball and thrust washer.
3. Install only the two 3.0mm (0.118 in) thick "C" washers in the front mainshaft groove and hold them with the retaining rings. See Fig. 6.

Copyright © 1998 Mitchell Repair Information Company, LLC
Saturday, September 08, 2001 09:44AM

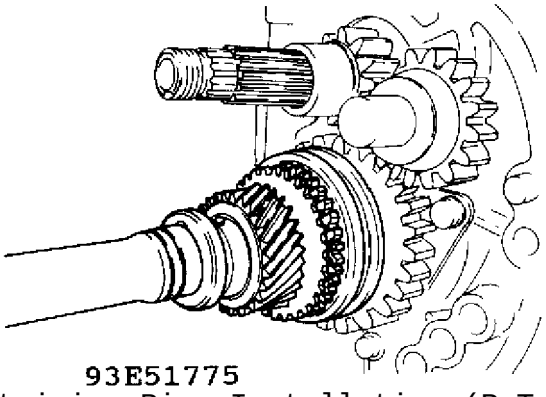

Fig. 6: Retaining Ring Installation (R-Type)

Note: If the "C" washers are not pushed fully forward in the mainshaft groove the measurement will be incorrect.

4. While pushing the "C" washers forward, measure the clearance between the "C" washers and thrust waster. (See Fig. 7).

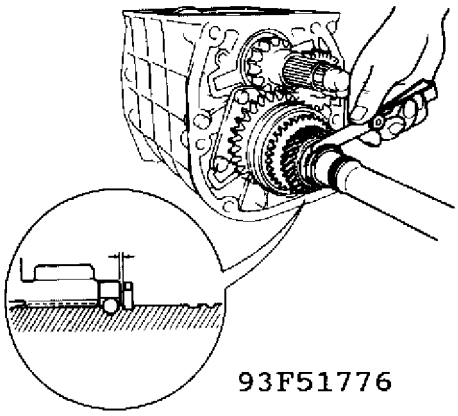

Fig. 7: Measuring Clearance Between "C" Washers & Thrust Washer (R-Type)

Standard Clearance: Refer to the appropriate service information for the vehicle being repaired.

MAINSHAFT REAR BEARING

1. Drive on the mainshaft rear bearing using a suitable pipe, fully seating it against the front "C" washers. See Fig. 8.
2. Install the original "C" washers and hold them with the retaining ring.

Copyright © 1998 Mitchell Repair Information Company, LLC
Saturday, September 08, 2001 09:44AM

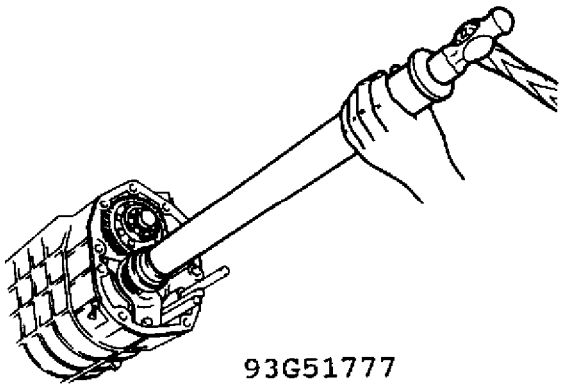

Fig. 8: Rear Bearing Installation (R-Type)

Note: If the "C" washers will not fit into the rear mainshaft groove, select the proper thickness "C" washers. Ensure both "C" washers at this position are the same thickness.

3. Measure the clearance between the "C" washers and mainshaft rear bearing. See Fig. 9.
   If the clearance is not as specified, select the proper "C" washers.

Standard Clearance: Refer to the appropriate service information for the vehicle being repaired.

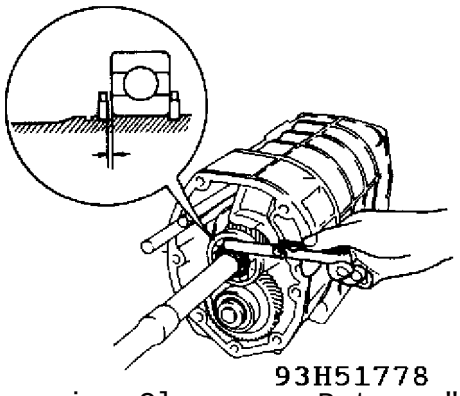

Fig. 9: Measuring Clearance Between"C" Washer and Rear Bearing (R-Type)

END OF ARTICLE

REMANUFACTURED TRANS (CANADIAN) - DIAGNOSIS SHEET CAT. J, NO. 95-02
Article Text

Copyright © 1998 Mitchell Repair Information Company, LLC
Saturday, September 08, 2001 09:44AM

ARTICLE BEGINNING

TECHNICAL SERVICE BULLETIN

REMANUFACTURED TRANSMISSIONS

Model(s): All Mazda (Canadian) Models through 1995
Category: J - Manual Transmission
Bulletin No.: 95-02
Date: May 1995

DESCRIPTION

Remanufactured Transmissions and Transaxles which are supplied by Mazda Canada Inc., are rebuilt by M.A.N.A. (Mazda North America Inc.). This division of Mazda supplies remanufactured units for both Canada and United States.

In their continued efforts to upgrade the quality of these remanufactured units they are looking for more information on what initially failed and why. This will allow the cause to be recognized and addressed during the remanufacturing of the failed unit.

To assist M.A.N.A. in their efforts, the following procedures will be put into place immediately:

1. A properly completed "Warranty Tag" (P/N 9999-94-5011-E/F) must be attached, directly to the body of the core unit (Attachment #1 is a completed sample).

2. A properly completed "Automatic Transmission, Diagnosis Information Sheet" must be folded twice and stapled to the "Warranty Tag". See Fig. 1.

Copyright © 1998 Mitchell Repair Information Company, LLC
Saturday, September 08, 2001 09:44AM

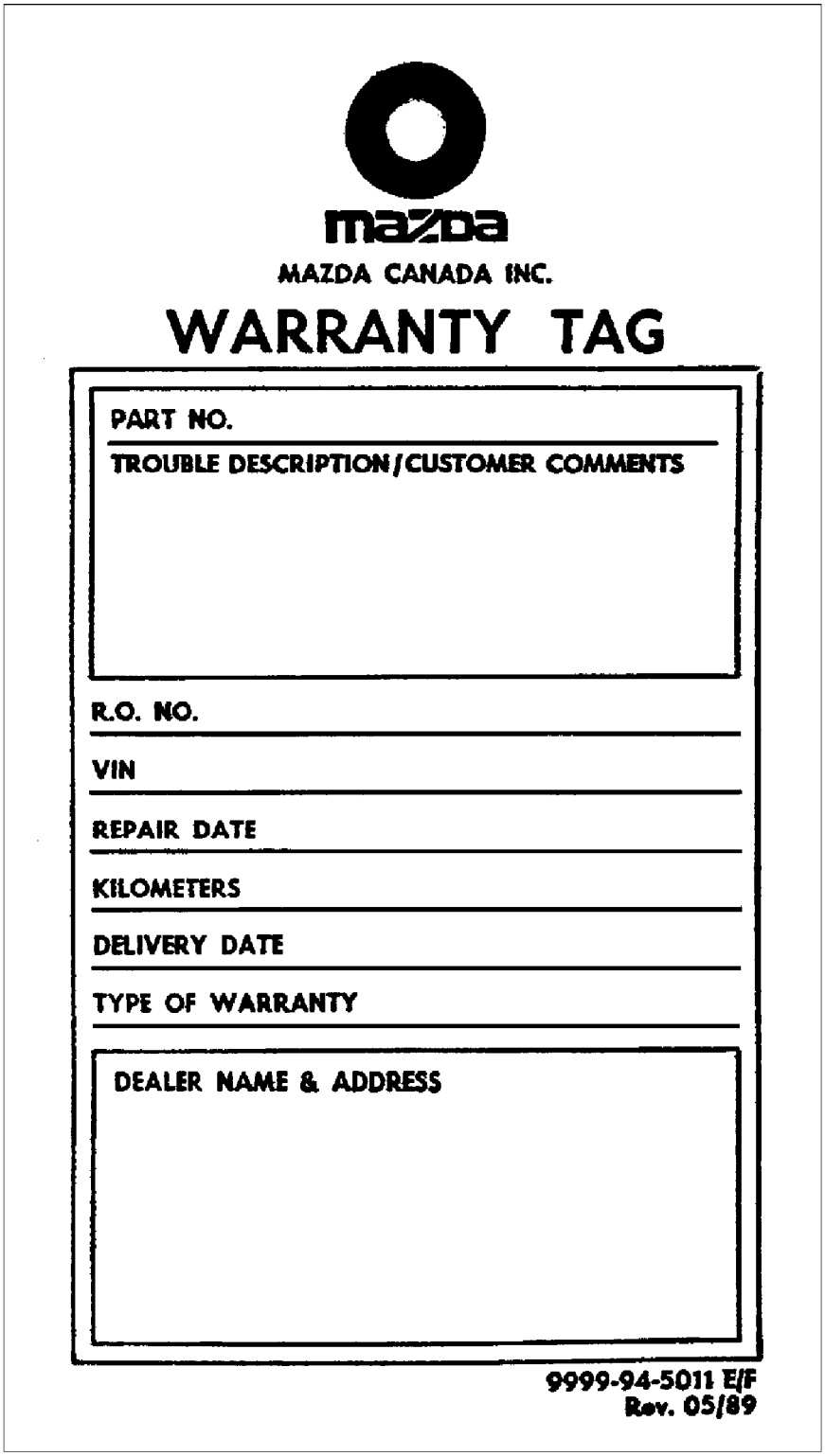

94C59313

Fig. 1: Example of Warranty Tag

3. The defective unit must be shipped to the Quality Assurance Centre

Copyright © 1998 Mitchell Repair Information Company, LLC
Saturday, September 08, 2001 09:44AM

as specified in the enclosed revised Parts Merchandising Bulletin.

If a core unit is received without a properly completed "Warranty Tag" and/or properly completed "Automatic Transmission Diagnosis Information Sheet" the core credit will not be processed for payment. The dealer will be advised of the situation by the Warranty Administration Department. Once the missing information is faxed/received by the Warranty Administration Department, the core credit will be processed.

If the requested information is not received within 10 working days, the core unit will be shipped back to the dealer, freight collect.

Two copies of this Service Bulletin are being supplied to each dealer. Please give the second copy to the Mazda Parts Manager.

NOTE: Five copies of the Automatic Transmission Diagnosis Information Sheet are being supplied with this bulletin. Ensure 1 copy remains intact with the original bulletin so that additional copies can be produced as necessary by your dealership.

Your understanding and continued co-operation are appreciated. See Fig. 1 for example.

AUTOMATIC TRANSMISSION DIAGNOSIS INFORMATION SHEET

1. Dealer Code _____ RO _____ Date _____ Model Yr. _____
   VIN _____ Odometer _____

2. Customer Concern: (Check appropriate box)

Shifting/Engagement:	Does Not Occur	Slips	Delayed	Harsh
A. Engagement into drive	____	____	____	____
B. Engagement into reverse	____	____	____	____
C. 1-2 Upshift	____	____	____	____
D. 2-3 Upshift	____	____	____	____
E. 3-4 Upshift	____	____	____	____
F. Downshifts	____	____	____	____
G. Kickdowns	____	____	____	____

Noise/Vibration: ____ Clunk ____ Whine ____ Buzz ____ Other
Condition Occurs: ____ Hot ____ Cold
Frequency: ____ Intermittent ____ Always

Other: _____

3. Technician Diagnosis:

Visual Inspection: (note leaks) _____

Copyright © 1998 Mitchell Repair Information Company, LLC
Saturday, September 08, 2001 09:44AM

Fluid Condition: _____ Burnt _____ Normal
Fluid Level: _____ Correct _____ High _____ Low

Line Pressure (record applicable data)

	Idle	WOT
P	_____	N/A
R	_____	_____
N	_____	N/A
OD	_____	_____
D	_____	_____
2	_____	_____
1	_____	_____

4. Replacement Transmission Identification: (unit to be installed into vehicle)

Installation date _____ Part Number _____ Unit Serial No. _____

5. Transmission Identification: (MCI use only)
_____ Original unit _____ reman unit
_____ Unit Serial Number

**ÄÄÄ

REAR WHEEL DRIVE PINION HEIGHT ADJUSTMENT INFO CAT. 9, NO. 014/83
Article Text

Copyright © 1998 Mitchell Repair Information Company, LLC
Saturday, September 08, 2001 09:49AM

ARTICLE BEGINNING

TECHNICAL SERVICE BULLETIN

PINION HEIGHT ADJUSTMENT

Models	All Rear Drive Models
Bulletin No.	014/83
Category	9
Date	12/23/83

DESCRIPTION

If the differential pinion height adjustment is necessary for rear wheel drive vehicles, the number on the end surface of the drive pinion should be used to obtain the adjustment value.

There are two types of markings:

1. Handwritten marking with electric pen. This number should be used for the adjustment value. See Fig. 1.

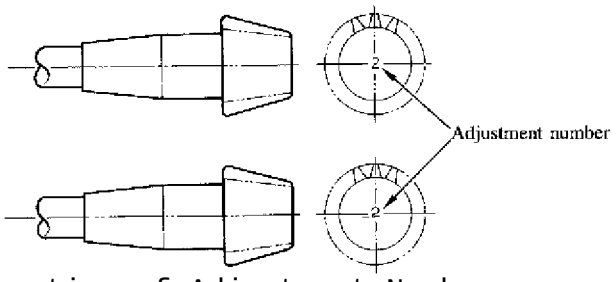

Fig. 1: Location of Adjustment Numbers

2. No handwritten marking. If there is no handwritten marking on the end surface of the drive pinion, the adjustment value is zero (0).

NOTE: 1. There are some cases of numbers stamped on the end surface of the drive pinion, however, these numbers do not indicate the adjustment value.

2. It is essential to check tooth contact after assembling the differential even though the pinion height adjustment has been made. Please refer to the Service Information for the proper tooth contact.

END OF ARTICLE

ALIGNMENT SPECIFICATIONS (CANADIAN) CAT. N, NO. 95-02
Article Text

Copyright © 1998 Mitchell Repair Information Company, LLC
Saturday, September 08, 2001 09:50AM

ARTICLE BEGINNING

TECHNICAL SERVICE BULLETIN

ALIGNMENT SPECIFICATIONS

Models: 1993-95 Mazda Models (Except 1994-95 B-Series) (Canada)
Category: N - Steering
Bulletin No.: 95-02
Date: January, 1995

APPLICABLE MODELS

All models except 1994-95 B-Series.

DESCRIPTION

This bulletin provides background information on standard specification and measuring conditions for wheel alignment.

Measured vales are not absolute. Variations occur between technician, equipment and the condition of the vehicle at the time of measurement. To avoid unnecessary adjustments, specifications and measurement conditions have been changed in the Workshop Manual. These changes are described below.

NOTE: Changes in the specifications do not imply that alignment tolerances have increased during production. Vehicle alignment is set to the median specifications during production and technicians should also use median specifications during alignment adjustment.

NEW SPECIFICATIONS TABLE

	Items	Standard Tolerance	Note
F R O N T	Camber (Difference between right and left)	±1 (±1.5) degrees	
	Caster (Difference between right and left	±1 (±1.5) degrees	
	Toe (Total toe-in)	±4mm (Angle indicated is also described)	One side is not mentioned. (No specification)
R E A R	Camber (Difference between right and left	±1 (±1.5) degrees	
	Toe (Total toe-in)	±4mm (Angle	One side toe is

ALIGNMENT SPECIFICATIONS (CANADIAN) CAT. N, NO. 95-02
Article Text (p. 2)

Copyright © 1998 Mitchell Repair Information Company, LLC
Saturday, September 08, 2001 09:50AM

A R	indicated is also described)	not mentioned. (No specification)
Thrust Angle	ñ0.8 degrees	

NOTE: Each vehicle varies in specification median. Refer to the Workshop Manual for each vehicle's specification.

VEHICLE PREPARATION AND CONDITION

1. The vehicle should have:

   * No Passengers
   * No Luggage
   * Gas Tank Full, Radiator And Engine Oil To The Specified Levels
   * Spare Tire, Jack And Tools Stored In Designated Areas
   * Tire Pressure Checked And, If Necessary, Adjusted

NOTE: If the specifications are different (depending on load conditions), adjust the pressure for the lightest load.

2. The table below contains examples of front caster specifications based on fuel tank level.

CASTER SPECIFICATION TABLE

Fuel Gauge Indication	Front Caster (Shown in degrees, minutes)
Empty	3 degrees 05' to 5 degrees 05'
1/4	3 degrees 10' to 5 degrees 10'
1/2	3 degrees 15' to 5 degrees 15'
3/4	3 degrees 20' to 5 degrees 20'
Full	3 degrees 25' to 5 degrees 25'

NOTE: Specifications may differ between models.

3. Follow the operating procedures specified for the alignment equipment being used.

4. Prior to measuring the current settings, firmly push the vehicle bumper up and down to stabilize the vehicle's height.

END OF ARTICLE

ALIGNMENT SPECIFICATIONS AND TOLERANCES -INFORMATION CAT. N, NO. 001/95
Article Text

Copyright © 1998 Mitchell Repair Information Company, LLC
Saturday, September 08, 2001 09:50AM

ARTICLE BEGINNING

TECHNICAL SERVICE BULLETIN

ALIGNMENT SPECIFICATIONS

Model(s): All Mazda Models
(except Navajo & 1994 and on B-Series vehicles)
Category: N - Steering
Bulletin No.: 001/95
Date: 1/19/95

NOTE: This bulletin was originally released as Cat N, #003/94.
Replace the original bulletin with this revised copy.

APPLICABLE MODELS

All models except Navajo and 1994 and on B-Series

DESCRIPTION

This bulletin provides background information on standard specification and measuring conditions for wheel alignment. Measured values are not absolute. Variations occur between technician, equipment and the condition of the vehicle at the time of measurement. To avoid unnecessary adjustments, specifications and measurement conditions have been changed in the workshop manual. These changes are described below.

NOTE: Changes in the specifications do not imply that alignment tolerances have increased during production. Vehicle alignment is set to the median specifications during production and technicians should also use median specifications during alignment adjustment.

NEW SPECIFICATIONS TABLE

Items		Standard Tolerance	Note
Front	Camber (Difference between right and left)	± 1 (±1.5) degrees	
	Caster (Difference between right and left)	± 1 (±1.5) degrees	
	Toe (Total toe-in)	± 4mm (Angle indicated is also described)	One side toe is not mentioned. No specification

Copyright © 1998 Mitchell Repair Information Company, LLC
Saturday, September 08, 2001 09:50AM

Rear	Camber (Difference between right and left)	ñ 1 (ñ1.5) degrees	
	Toe (Total toe in)	ñ 4mm (Angle indicated is also described)	One side toe is not mentioned. No specification
	Thrust Angle	ñ 0.8 degrees	

NOTE: Each vehicle varies in specification median. Refer to the appropriate service information for each vehicle's specification.

VEHICLE PREPARATION AND CONDITION

1. The vehicle should have:
   * No Passengers
   * No Luggage
   * Gas Tank Full, Radiator and Engine Oil To The Specified Levels
   * Spare Tire, Jack And Tool Stored In Designated Areas
   * Tire Pressure Checked And, If Necessary, Adjusted.

   NOTE: If the specifications are different (depending on load conditions), adjust the pressure for the lightest load.

2. The table below contains examples of front caster specifications based on fuel tank level.

CASTER EXAMPLE TABLE

Fuel Gauge Indication	Front Caster (Shown in degrees, minutes)
Empty	3 degrees 05' to 5 degrees 05"
1/4	3 degrees 10' to 5 degrees 10"
1/2	3 degrees 15' to 5 degrees 15"
3/4	3 degrees 20' to 5 degrees 20"
Full	3 degrees 25' to 5 degrees 25"

NOTE: Specifications may differ between models.

3. Follow the operating procedures specified for the alignment equipment being used.
4. Prior to measuring the current settings, firmly push the vehicle bumper up and down to stabilize the vehicle's height.

ALUMINUM WHEEL TIRE CHANGE - CENTER HUB DAMAGE INFO CAT. 12, NO. 002/85
Article Text

Copyright © 1998 Mitchell Repair Information Company, LLC
Saturday, September 08, 2001 09:51AM

ARTICLE BEGINNING

TECHNICAL SERVICE BULLETIN

TIRE CHANGERS FOR ALUMINUM WHEEL

Models	RX-7, 626 & GLC
Bulletin No.	002/85
Category	12
Date	6/17/85

DESCRIPTION

If standard tire changers are used to change tires on aluminum wheels, damage will occur to the center hub. See Fig. 1.

The manufacturers listed below offer adapters for use on their tire changers when changing tires on aluminum wheels. Call the number listed for the nearest representative. Ask for the Mag Tool Adapter.

FCC - (800) 362-8326
AMMCO - (312) 689-1111
COATS - (800) 323-0661

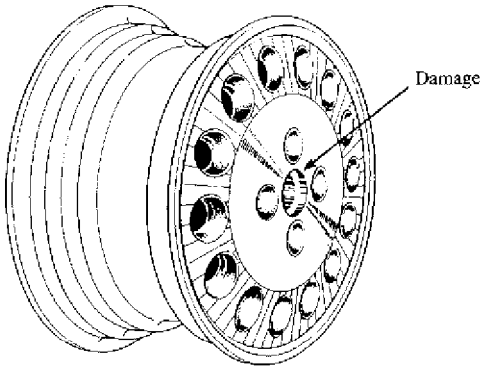

Fig. 1: RX7, 626 & GLC Aluminum Wheel

END OF ARTICLE

CHECKING PROCEDURE FOR POWER STEERING BOOT LEAKAGE CAT. N, NO. 004/97
Article Text

Copyright © 1998 Mitchell Repair Information Company, LLC
Saturday, September 08, 2001 09:51AM

ARTICLE BEGINNING

TECHNICAL SERVICE BULLETIN

CHECKING PROCEDURE FOR POWER STEERING BOOT LEAKAGE

Model(s): All Mazda Models with Rack/Pinion
Category: N - Steering System
Bulletin No.: 004/97
Date: December 28, 1997

DESCRIPTION

Customers complaining of problems associated with power steering fluid loss should have the vehicle inspected according to the instructions in section N of the workshop manual. If the leak is determined to be coming from the power steering gear, follow the procedures listed below.

NOTE: Service Managers should place a copy of this bulletin in section N of the workshop manual.

INSPECTION PROCEDURE

1. Check the color of the fluid that is leaking. See Fig. 1.

   * If the fluid is red, proceed to step 3.

   * If the fluid is any color other than red, (i.e. yellow, colorless), this is grease and no problem exists with the power steering gear. Proceed to step 2.

2. Inspect the boot for damage (i.e. cracks or tears).

3. Remove the boot wire and inspect the inside of the boot for contamination (dirt, water, etc.). See Fig. 1.

   * If there is a large quantity of red fluid inside the boot, this indicates insufficient sealing. Replace the side seal and the power steering gear according to section N of the workshop manual. See Fig. 1.

   * If a minimal quantity of red fluid is present, proceed to step 4.

4. Start the engine and turn the steering wheel right and left, lock to lock.

   * If the fluid is leaking, replace the side seal and the power steering gear according to section N of the workshop manual.

   * If no fluid is leaking, no problem exists in the power steering

Copyright © 1998 Mitchell Repair Information Company, LLC
Saturday, September 08, 2001 09:51AM

gear.

CAUTION: DO NOT keep the steering wheel fully turned to the locked position for more than five seconds. Power steering system damage may occur.

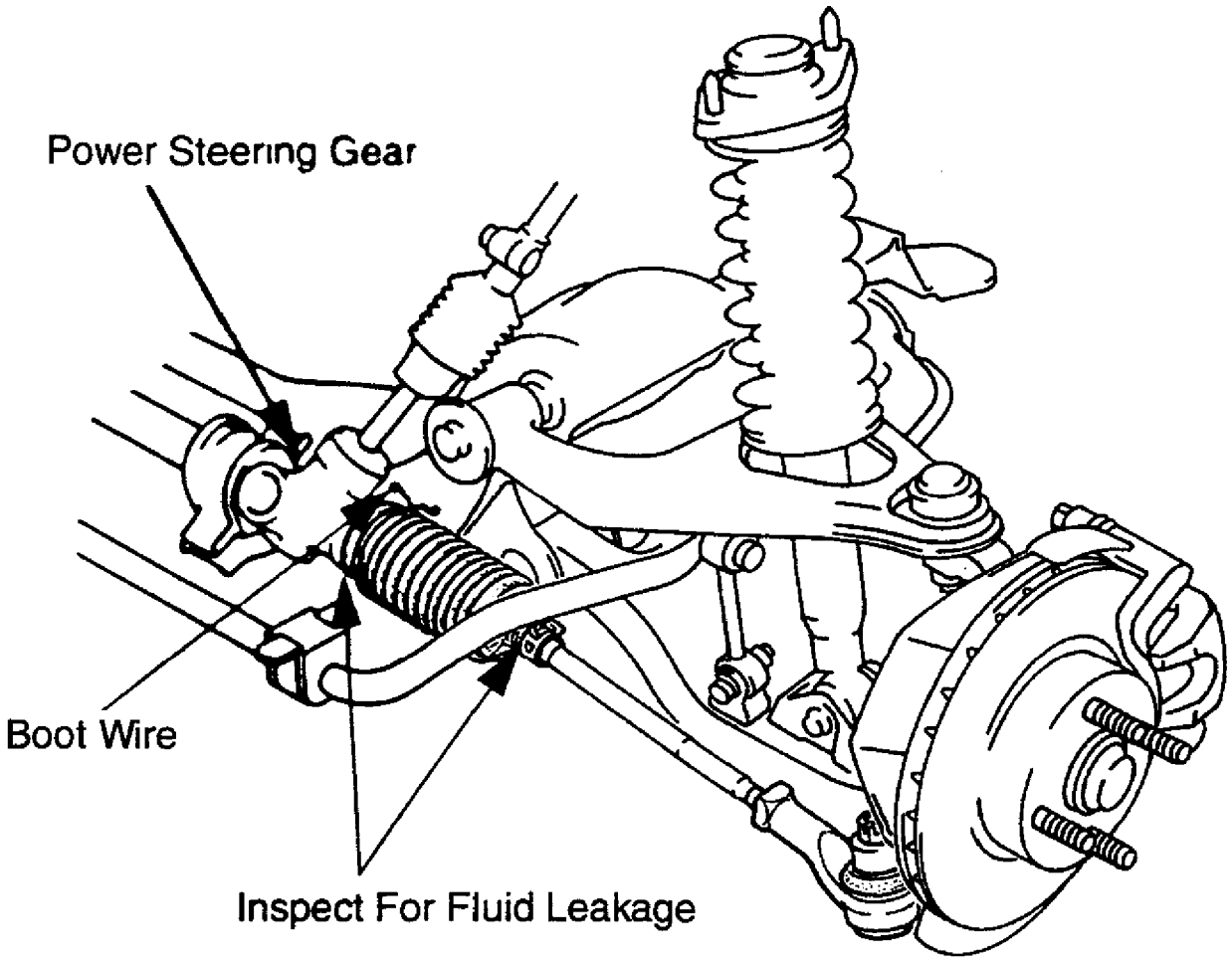

Fig. 1: Power Steering Gear & Boot Wire - Inspect Fluid Leakage

END OF ARTICLE

HIGH STEERING WHEEL EFFORT - VERIFY CONDITION MT 0995-05
Article Text

Copyright © 1998 Mitchell Repair Information Company, LLC
Saturday, September 08, 2001 09:51AM

ARTICLE BEGINNING

TECHNICAL SERVICE BULLETIN

STEERING WHEEL EFFORT

Model(s): All Mazda
Category: Mazda Tips
Bulletin No.: MT 0995-05
Date: 1995

DESCRIPTION

If a customer complains of high or uneven steering effort, before attempting any repair, verify the amount of force required to turn the steering wheel. Use the instructions in the Workshop Manual, category "N", under "Steering Wheel Effort". This procedure involves using a pull scale.

CAUTION: Before measuring steering wheel effort make sure that:

1. Tires are the correct size and correctly inflated.
2. Power steering fluid level and condition are OK.
3. Vehicle is on a hard, level surface for testing.

* If the force is within the specification listed in the Workshop Manual, inform the customer that this is a normal condition.
* If the force is out of specification and/or abnormally high, then troubleshoot per the Workshop Manual.

END OF ARTICLE

INSTALLATION OF TIRE CHAINS CAT. Q, NO. 005/93
Article Text

Copyright © 1998 Mitchell Repair Information Company, LLC
Saturday, September 08, 2001 09:51AM

ARTICLE BEGINNING

TECHNICAL SERVICE BULLETIN

INSTALLATION OF TIRE CHAINS

Model(s): All Mazda Models
Category: "Q" Tires/Wheels
Bulletin No.: 005/93
Date: 6/3/93

DESCRIPTION

Tire chains may scratch or chip aluminum wheels. If chains are to be installed, aluminum wheels should be changed to steel wheels.

Please remind your customers of the following instructions when installing tire chains on their vehicle. These recommendations are also explained in the vehicles owner's manual.

1. Investigate local regulations before using tire chains.

2. Use only SAE Class "S" chains, and make sure they fit the vehicle's tires.

3. Follow the chain manufacturer's instructions.

4. Remove the steel wheel covers (if equipped) to avoid scratches or damage.

5. Front Wheel Drive Vehicle: Secure the chains on the front tires as tightly as possible. Retighten after one-half mile of driving. Rear Wheel Drive Vehicles: Secure the chains to the rear wheels as tightly as possible. Retighten after one-half mile of driving.

CAUTION:

- CHAINS MAY AFFECT VEHICLE HANDLING.

- DO NOT GO FASTER THAN 30 MPH OR THE MANUFACTURER'S RECOMMENDED SPEED, WHICHEVER IS LOWER.

- DRIVE CAREFULLY AND AVOID BUMPS, HOLES AND SHARP TURNS.

- AVOID LOCKED-WHEEL BRAKING.

- DO NOT USE CHAINS ON THE TEMPORARY TIRE. THEY MAY DAMAGE THE VEHICLE AND THE TIRE.

END OF ARTICLE

REVISED IDLER ARM/DUST SEAL CAT. 10, NO. 023/83
Article Text

Copyright © 1998 Mitchell Repair Information Company, LLC
Saturday, September 08, 2001 09:51AM

ARTICLE BEGINNING

TECHNICAL SERVICE BULLETIN

IDLER ARM MODIFICATION

Models 1983 GLC (WAGON), RX-7
Bulletin No. 023/83
Category 10
Date 7/25/83

DESCRIPTION

To increase the sealing efficiency of the dust seal, the configurations of the dust seal and idler arm have been changed as shown since the production in March, 1983

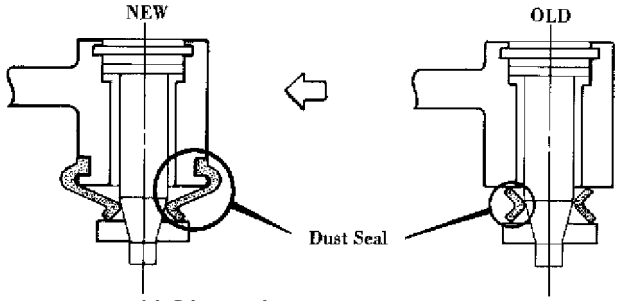

Fig. 1: Idler Arm Modification

VIN OF PRODUCTION CHANGE

GLC (W):	JMlBD521 D0703543	March, 1983
RX-7:	JMlFB331 D0735212	March, 1983

PARTS INFORMATION

NEW PART NO.	OLD PART NO.	DESCRIPTION	MODEL	INTERCHANGEABILITY
3958 32 320A	3958 32 320	Idler Arm	GLC(W)	NEW ÄÄÄÄ> OLD
8871 32 320A	8871 32 320	Idler Arm	RX-7	NEW ÄÄÄÄ> OLD
0866 32 279*	8531 32 279	Dust Seal	GLC(W), RX-7	NO

END OF ARTICLE

STEERING WHEEL SLIGHTLY OFF CENTER - PROCEDURE CAT. N, NO. 005/95
Article Text

Copyright © 1998 Mitchell Repair Information Company, LLC
Saturday, September 08, 2001 09:51AM

ARTICLE BEGINNING

TECHNICAL SERVICE BULLETIN

STEERING WHEEL SLIGHTLY OFF CENTER

Models: All Mazda Models Through 1995 Except B-Series & Navajo
Category: N
Bulletin No.: 005/95
Date: 3/15/95

DESCRIPTION

The steering wheel on some models may be slightly off center. The vehicle still drives straight and does not pull right or left. If a customer complains of the position of the steering wheel, confirm that the vehicle is not pulling and repair according to the instructions in this bulletin.

REPAIR PROCEDURE

1. Drive on a straight road and place the steering wheel in a neutral position. If the steering wheel is not centered, go to step 2.

2. Using the outside circumference of the steering wheel, measure the distance between the neutral position and the center position.

NOTE: If the distance is larger than 30 mm (1.18 in.) remove the steering wheel and reinstall in the correct position. If the steering wheel is still off center, proceed to step 3.

3. Measure the distance described in step 2. 1f less than 30 mm (1.18 in) loosen both left and right tie rod end lock nuts. Turn the rods in the opposite directions by the same amount until the steering wheel is centered.

4. Road test the vehicle to confirm the steering wheel is centered. If not centered, repeat step 3.

The TIE ROD OUTSIDE CIRCUMFERENCE DISTANCE TABLE below shows the approximate distance that the outside circumference will move per 90 degree turn on the tie rod (both left and right in opposite directions).

TIE ROD CIRCUMFERENCE DISTANCE TABLE

Model	Type	Approx. Distance (mm)
1990-94 323/Protege, 1995 Protege	With P/S	8 mm
	Without P/S	12 mm

STEERING WHEEL SLIGHTLY OFF CENTER - PROCEDURE CAT. N, NO. 005/95
Article Text (p. 2)

Copyright © 1998 Mitchell Repair Information Company, LLC
Saturday, September 08, 2001 09:51AM

	4 cyl.	8 mm	
1992-95 MX-3			
	6 cyl.	7 mm	
1993-95 RX-7	All	7 mm	
1992-95 626/MX-6	All	9 mm	
1992-95 929	All	11 mm	
	4 x 2	13 mm	
1989-95 MPV			
	4 x 4	12 mm	
1990-95 MX-5 Miata	All	10 mm	
1995 Millenia	All	10 mm	

WARRANTY INFORMATION

(Applies To Verified Customer Complaints On Vehicles Covered Under Normal Warranty. Refer To The SRT Microfiche For Current Warranty Term Information).

Warranty Type:	A
Symptom Code:	30
Damage Code:	9H
Part Number Main Cause:	5555 FE 001
Operation Number:	XX0640RX
Labor Hours:	0.5 Hrs.

END OF ARTICLE

CATALYST PELLETS & MODIFICATION OF SECONDARY AIR SYS
Article Text

Copyright © 1998 Mitchell Repair Information Company, LLC
Saturday, September 08, 2001 09:58AM

ARTICLE BEGINNING

TECHNICAL SERVICE BULLETIN

MAZDA RX-7 EXHAUST EMISSION SYSTEM RECALL CAMPAIGN 23702

Model	1982-83 Mazda RX-7
Recall No.	23702
Date	February 17, 1987
Number of Affected Vehicles:	91,112

DEFECT INFORMATION REPORT

1. Manufacturer: Mazda Motor Corporation

2. Description of the Defect: Recall Surveillance tests performed by EPA found some MY-1982 and 1983 Mazda RX-7's to be in non-compliance of Federal exhaust emission standards for HC and CO. Mazda's investigation determined the non-compliance to be due to excessively-rich air fuel mixture and premature deterioration of the vehicle's catalyst.

3. Class or Category of Vehicles Potentially Affected:

   1982-83 Mazda RX-7 (Federally Certified Vehicle)

4.1. Number of Vehicles Estimated to Have the Defect: The number of vehicles that have the problem identified in (2) above is estimated to be 91,112 units in accordance with manufacturer's production records.

4.2 Production Plants: Mazda Motor Corporation
3-1 Shinchi, Fuchu-cho, Aki-gun, Hiroshima, Japan

5. Evaluation of Emissions Impact and Description of Driveability Problems: The defect may cause noncompliance with Federal emission standards for unburned hydrocarbons and carbon monoxide. The defect has no effect on driveability.

6. Available Emissions Data: The EPA recall surveillance test results are shown in the following tables:

EPA RECALL SURVEILLANCE TEST RESULTS

Model Year	Vehicle	Mileage	Exhaust Emission (g/mile) HC	CO	NOx
1982	1	38,600	1.51	6.01	0.88
	2	19,900	1.25	5.14	0.69
	3	39,200	1.16	4.79	0.58

Copyright © 1998 Mitchell Repair Information Company, LLC
Saturday, September 08, 2001 09:58AM

	4	31,100	1.26	11.58	0.53
	5	38,600	1.31	7.87	0.63
	6	27,550	1.25	2.84	0.79
	Average	32,500	1.29	6.37	0.68
1983	1	22,700	0.56	3.32	0.50
	2	26,800	0.63	5.33	0.44
	3	27,000	0.62	4.19	0.41
	Average	25,500	0.60	4.28	0.45

7. Anticipated Follow-Up Action: Mazda will conduct a voluntary emission recall campaign to repair all subject vehicles. The voluntary emission recall report is shown below.

VOLUNTARY EMISSION RECALL REPORT

1. Description of Each Class of Subject Vehicles

AFFECTED VEHICLES

Make	Year	Model	Serial Vehicle Number Range	No. for Recall*
Mazda	1982	RX-7*	JM1FB3310C0600001-JM1FB3310D0764091	91,112
	1983			

NOTE: * Federally certified vehicle

2. Description of Repair

The content of the rear catalyst chambers will be replaced with more durable catalytic material.

3. Identification of Vehicle Owners

For the above recall campaign, the name and address of the owner will be determined by use of records obtained from the Vehicle Registration record at each importer. These records include the vehicles serial number, the owner's name and address. The notification of this recall to the owner will be made by first-class mail.

4. Owner's Eligibility

There will be no restrictions on eligibility.

Copyright © 1998 Mitchell Repair Information Company, LLC
Saturday, September 08, 2001 09:58AM

5. Procedure to Obtain Correction

   The repair will be done by authorized Mazda dealers only. The repair will be available on and after February 27, 1987. The time required for the repair will be about 1.2 hours.

6. Remedy by Persons other than Mazda Dealers

   No work under this campaign is to be performed by a person other than an authorized Mazda dealer.

7. Owner Letter

   See Attachment III below.

8. Provision for Adequate Supply of Parts

   We are planning to supply at least 30% of the parts required for this campaign to dealers as an initial stock before the start of the recall campaign. Thereafter, a local distributor will supply necessary parts to dealers in accordance with the progress of the recall campaign.

9. Repair Instructions to Mazda Dealers

   See Attachment I and II below

10. Consequence of fuel Economy, Driveability and Safety

    This repair has no impact on the fuel consumption, driveability and safety of the vehicle to be recalled.

11. Label

    Affix the Authorized Modification label to the vehicles whose repair is completed.

**ÄÄÄ

CATALYST PELLETS & MODIFICATION OF SECONDARY AIR SYS
Article Text (p. 4)

Copyright © 1998 Mitchell Repair Information Company, LLC
Saturday, September 08, 2001 09:58AM

B. Notification

The owners of subject vehicles will be notified on and after February 27, 1987 by first class mail.

C. Campaign Parts

1. Recall Parts Kit

The necessary parts to complete this modification will be supplied in kit form. We will provide dealers with a limited number of these kits in advance of the campaign. Each dealer will then be responsible for re-ordering additional kits as they are needed.

PARTS INFORMATION

Part Description	Part Number	Qty.
Pellet Set, Converter	8BF1 20 5050	1
containing:		
Gasket	1480 40 3750	1
Gasket	1480 40 3250	2
Lock Washer	8021 20 5480	2
Nut	8118 40 3550	4
Bolt	9979 60 6100	2
Bolt	9979 60 8160	2
Spring Washer	9997 11 2000	4
Gasket, ACV	N201 13 7240	1
Secondary Air Orifice	N201 13 5010	1
Recall Label	N2Y1 20 6090	1
No.1, No.2 Pellet Set	N222 40 3000	1

2. Related Parts

Kit 8BF1 20 5050 includes all parts necessary to make the repair required in this recall. However, some components on the vehicle which must be removed to perform the repair work may not be re-usable. This may be especially true in areas where a lot of road salt is used to de-ice roads.
In anticipation of this possibility, related components will be available to replace those parts which cannot be re-used. These related components must be ordered from your regional parts department. New pert numbers for some of these related components have been established as follows:

a. Container, Catalyst (P/N: N201 40 3200) - This is an empty catalytic converter housing without pellets.

b. Converter, Monolith (P/N: N2Y1 20 5500) - This supersedes

Copyright © 1998 Mitchell Repair Information Company, LLC
Saturday, September 08, 2001 09:58AM

the monolith converters (N201 40 4000 for 1982 model and N231 40 4000 for 1983 model) to be commonly used for both year models.

c. Gasket (P/N: N201 13 5020), Gasket (P/N: N201 13 5030) and "O" Ring (P/N: N201 13 5040) - These parts are the components of the air control valve, which may require being replaced in rare cases. See Fig. 1.

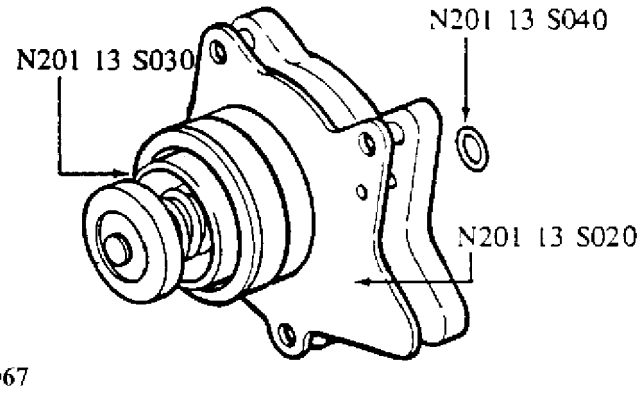

Fig. 1: Air Control Valve Components

3. Exchange Units of Converter Housing

We will provide 3 empty catalytic converter housings to each dealer as initial units of exchange operation.

* Refer to the Note of Item E.

D. Tools Used for Recall Repairs

In addition to the necessary parts mentioned in the above section C, the following special tools will be provided free of charge to assist in completing the repair properly.

Provided Tools

* Funnel
* Dust masks
* Drill bits

E. Repair Procedure

This recall involves performing four different operations:

* Installations of a secondary air orifice in the secondary air hose.
* Inspections and (if necessary) adjustment of the choke.
* Enlargement of a passage in the Air Control Valve.

CATALYST PELLETS & MODIFICATION OF SECONDARY AIR SYS
Article Text (p. 6)

Copyright © 1998 Mitchell Repair Information Company, LLC
Saturday, September 08, 2001 09:58AM

* Replacement of catalyst pellets in the Catalytic Converter.

NOTE: The catalyst pellets replacement should be performed under the exchange operation. Fill the exchange unit (converter housing) with new pellets prior to initiation of the repair on an individual vehicle and replace the converter housing of the vehicle with the exchange unit. The converter housing that is removed from the vehicle will be suitable for re-use and is to be installed on the next vehicle that receives this recall repair.
In the front compartment of the pelleted converter housing, ALL of the pellets are replaced. In the rear compartment of the pelleted converter housing, a specified amount of new pellets are installed and the remaining space is refilled with old pellets removed during this operation.

Please refer to Attachment II for the detailed repair procedure.

F. Warranty Information

You are requested to send catalyst pellets removed to our Warranty Department and enter P/N 7777 40 0010 (Qty: 1) as a related part for your warranty claim submission. We will reimburse $3.50/claim for the freight cost.

Consumer Comment Code:	99
Damage Code:	99
Part Number of Main Cause:	8BF1 20 5050
Quantity:	1
Process No:	A6022A
Operation No:	XX0128RX
Labor Hour:	1.2 hr.
Related Part No. and Qty.:	7777 40 0010 (Qty: 1)

ÄÄÄ

Copyright © 1998 Mitchell Repair Information Company, LLC
Saturday, September 08, 2001 09:58AM

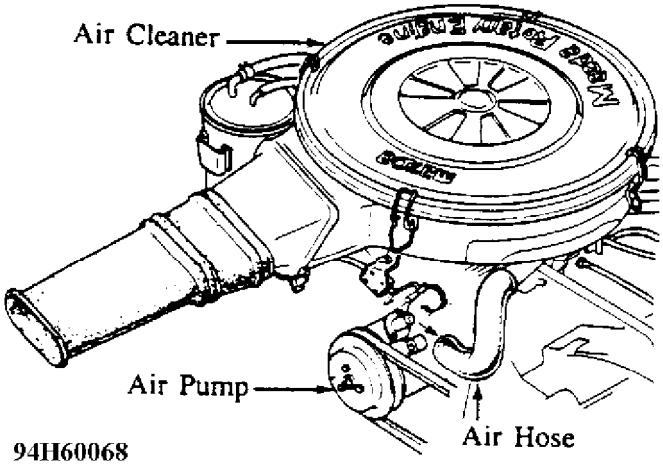

Fig. 2: Disconnecting Hose From Air Pump

2. Insert the secondary air orifice (included in the kit) about 1 inch into the air pump side of the hose. See Fig. 3.

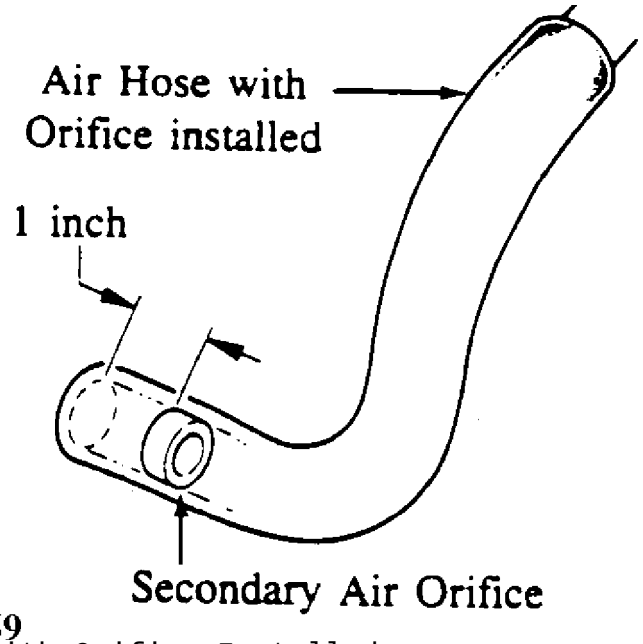

Fig. 3: Air Hose with Orifice Installed

3. Reconnect the hose.

II. Inspection and Adjustment of Choke Wire

Check the free-play of the choke wire and adjust if necessary.

1. Confirm the ignition key is in the "OFF" position.
2. Remove the lock spring.
3. Pull the choke outer cable until the choke linkage starts

Copyright © 1998 Mitchell Repair Information Company, LLC
Saturday, September 08, 2001 09:59AM

moving.

4. Measure the clearance between the lock nut and the bracket (clearance "A" in Fig. 4).

NOTE: The clearance should be 0.04-0.08 in.

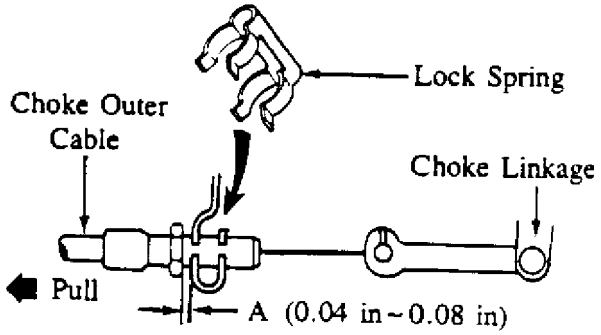

Fig. 4: Measuring Clearance Between Lock Nut and Bracket

5. If it is not within the specification, adjust it by turning the lock nut.
6. Install the lock spring.
7. Remove the air cleaner cover.
8. Confirm the choke valve is fully open. (Pull the choke valve softly with your finger (as shown in Fig. 5) and confirm it will not open further.) If it moves, repeat the adjustment at Step 5 to get the specified clearance of "A".

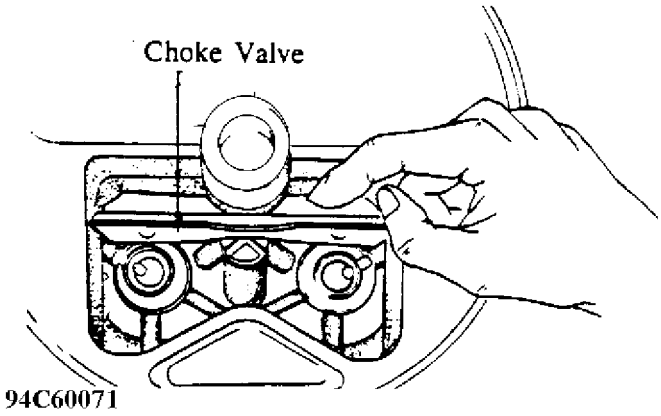

Fig. 5: Checking Choke Valve Opening

9. Re-install the air cleaner cover.

III. Air Control Valve (ACV)

Copyright © 1998 Mitchell Repair Information Company, LLC
Saturday, September 08, 2001 09:59AM

1. Remove the hot air duct. See Fig. 6.

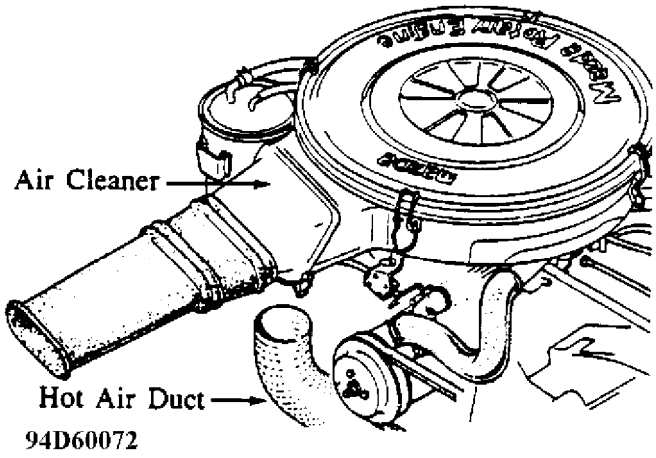

Fig. 6: Hot Air Duct Location

2. Disconnect the air hose between the air cleaner and the air control valve. See Fig. 7.

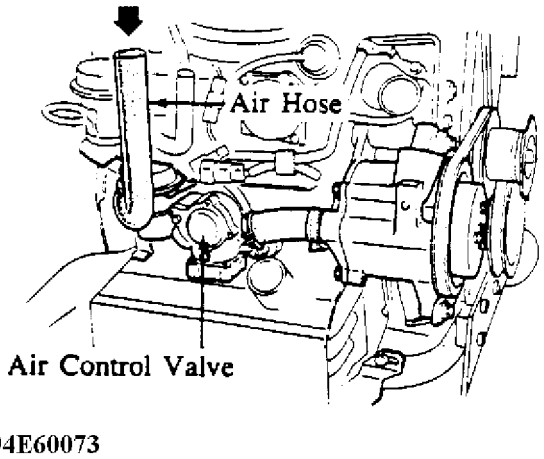

Fig. 7: Disconnecting Air Hose Between Air Cleaner and ACV

3. Slide the clamp on the air pump side of the air hose back down the hose. See Fig. 8.

Copyright © 1998 Mitchell Repair Information Company, LLC
Saturday, September 08, 2001 09:59AM

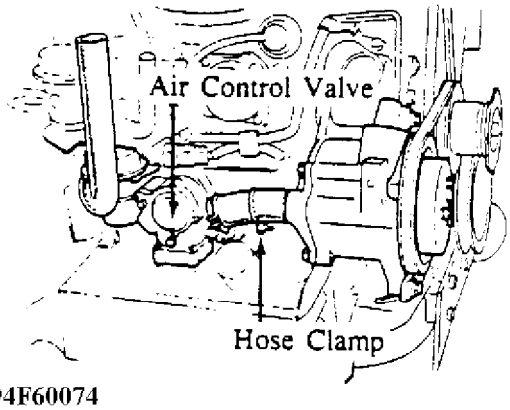

Fig. 8: Sliding Clamp on Air Hose (Air Control Valve Side)

4. Remove the air control valve and the air hose.
5. Remove the check valve from air control valve.

CAUTION: The check valve may fall out when ACV is removed. Be sure to retrieve and set back in place before re-installing. See Fig. 9.

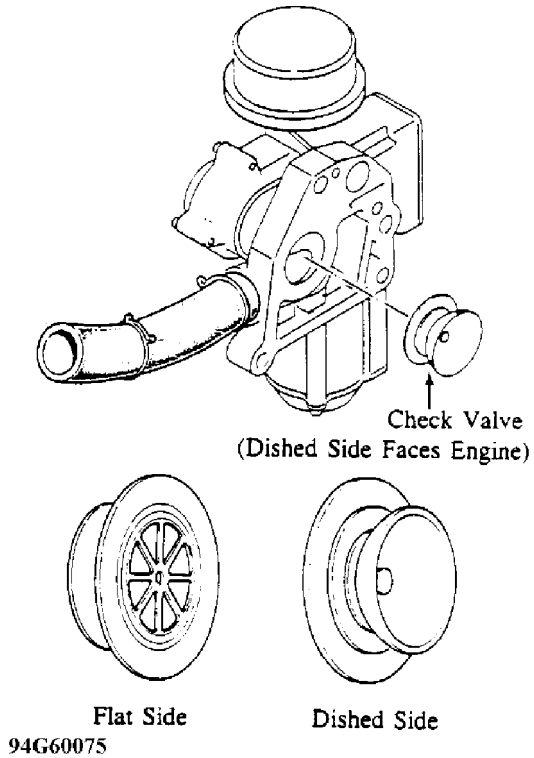

Fig. 9: Proper Check Valve Orientation

6. Remove the cap and switching valve as shown in Fig. 10.

Copyright © 1998 Mitchell Repair Information Company, LLC
Saturday, September 08, 2001 09:59AM

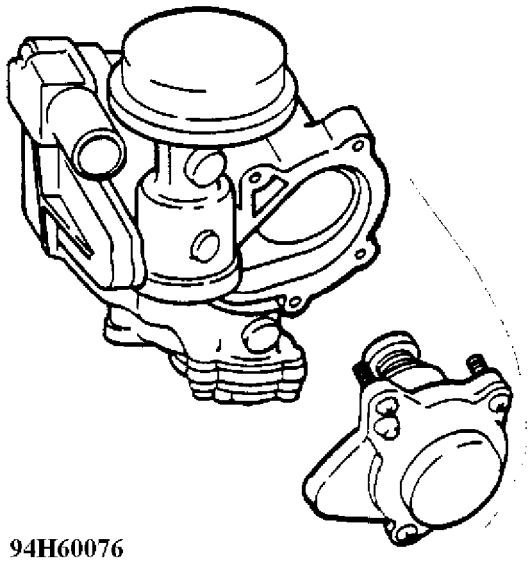

Fig. 10: Removing Cap and Switching Valve

7. Enlarge the hole as shown in Fig. 11 with the 4.2 mm drill bit provided.

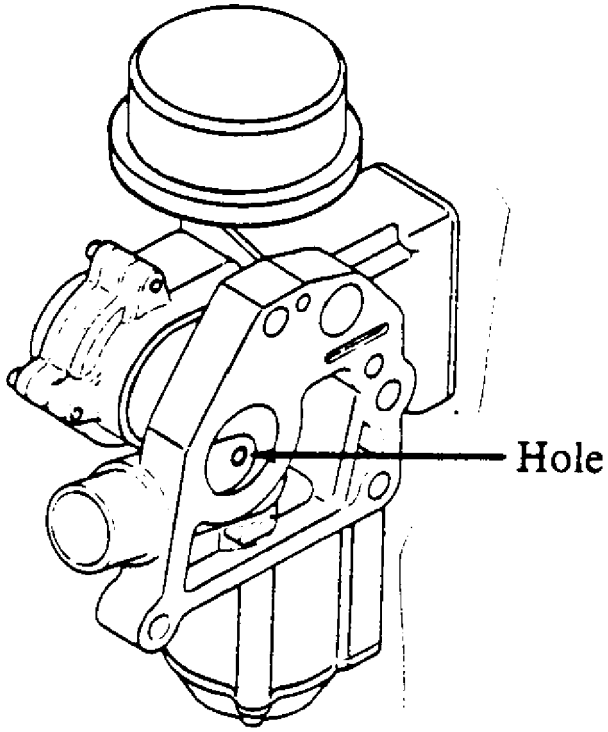

Fig. 11: Location of Hole for Enlargement

8. Blow the chips off with an air gun. See Fig. 12

Copyright © 1998 Mitchell Repair Information Company, LLC
Saturday, September 08, 2001 09:59AM

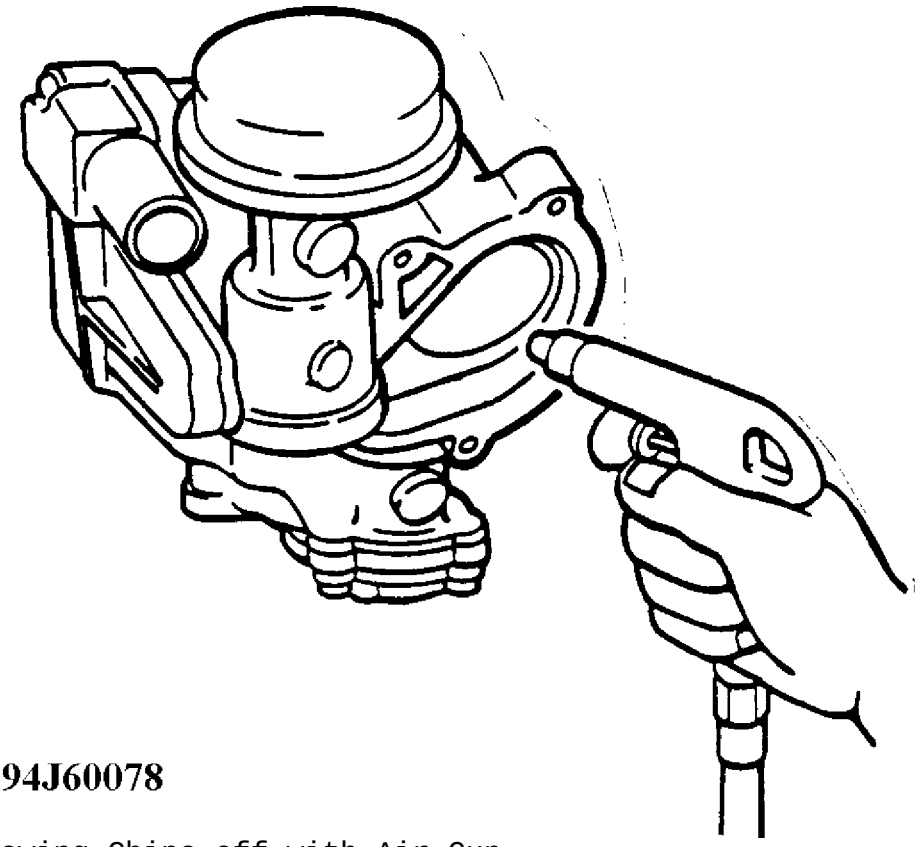

Fig. 12: Blowing Chips off with Air Gun

9. Re-install the cap and switching valve removed in Step 6.
10. Re-install the check valve to the intake manifold.

CAUTION: Be sure to fit the check valve into the intake manifold.

NOTE: The check valve may fall out when ACV is removed. Be sure to retrieve and set back in place before re-installing ACV. See Fig. 13.

Copyright © 1998 Mitchell Repair Information Company, LLC
Saturday, September 08, 2001 09:59AM

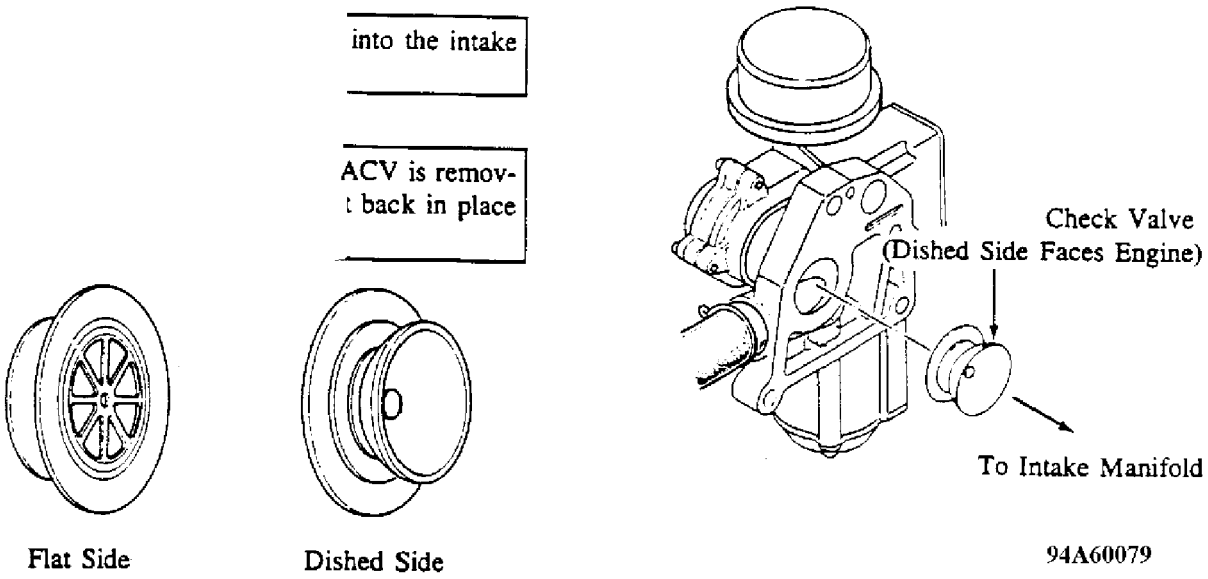

Fig. 13: Check Valve Position and Orientation

11. Re-install the air control valve.

NOTE: If the gasket cannot be re-used, use new one provided in the kit.

12. Reconnect the hoses and the hot air duct. Be sure to install the clamps securely.

IV. Replacement of the Catalyst Pellets

A. Preparation of Exchange Container

As mentioned in Item E of attachment I, the exchange container is to be partially prepared prior to initiation of the repair on each individual vehicle. This section describes how to prepare an exchange container.

CAUTION: * Wait until the catalytic converter has cooled.
* Use protective gloves and a prepared dust mask during replacement of the pellets.

1. Remove the drain plug No. 1 and No. 2 of the empty catalytic converter for exchange operation. See Fig. 14.

Copyright © 1998 Mitchell Repair Information Company, LLC
Saturday, September 08, 2001 09:59AM

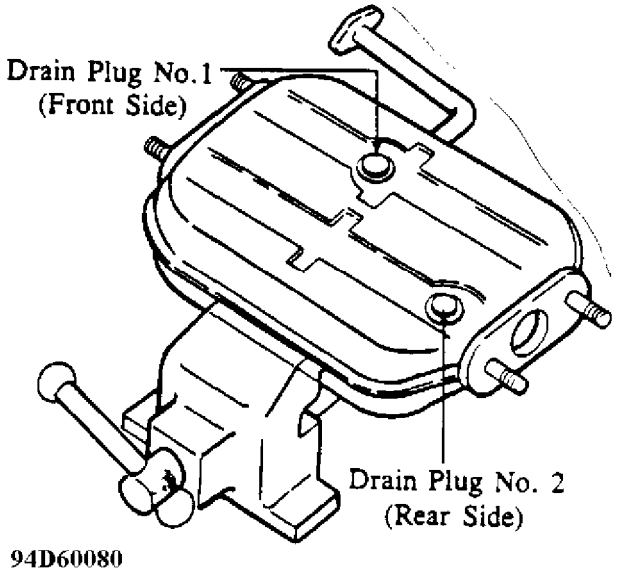

Fig. 14: Location of Drain Plugs No. 1 and 2

2. Hold the converter in a vise at an angle of 25ø-30ø as shown in Fig. 15.

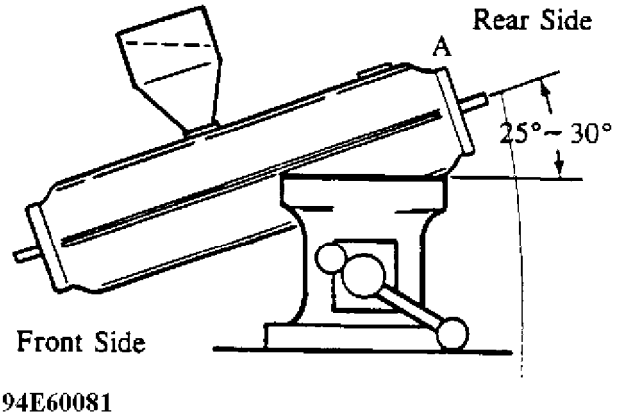

Fig. 15: Proper Positioning of Converter in a Vise

3. Put the funnel provided in the drain hole No. 1 (front side).
4. Pour all the pellets from the plastic bag containing a larger amount of pellets (1.4 L) into the drain hole No. 1.
5. Tap the converter repeatedly at point "A" (see Fig. 15) with a plastic hammer to allow the pellets to flow in until no more pellets can be put in.
6. Hold the converter level in the vise. See Fig. 16.

Copyright © 1998 Mitchell Repair Information Company, LLC
Saturday, September 08, 2001 09:59AM

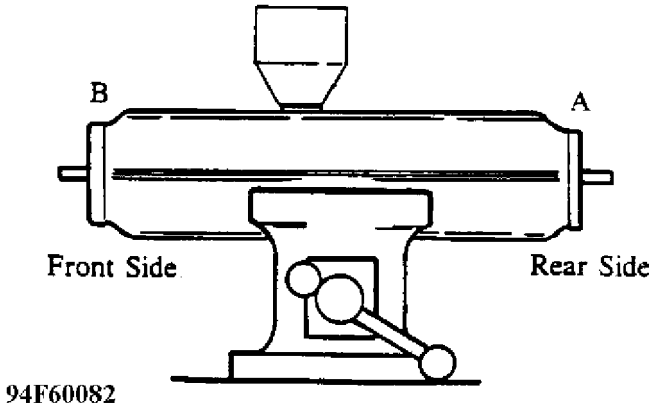

Fig. 16: Converter in Level Position

7. Tap the converter repeatedly at points "A" and "B" until all pellets are in.
8. Install a new lock washer and tighten the drain plug No. 1 to the specified torque. Torque to 30-50 N-m. Bend the lock washer to prevent the plug from loosening. See Fig. 17.

   Specified Torque: 30-50 N-m (22-36 ft-lb)

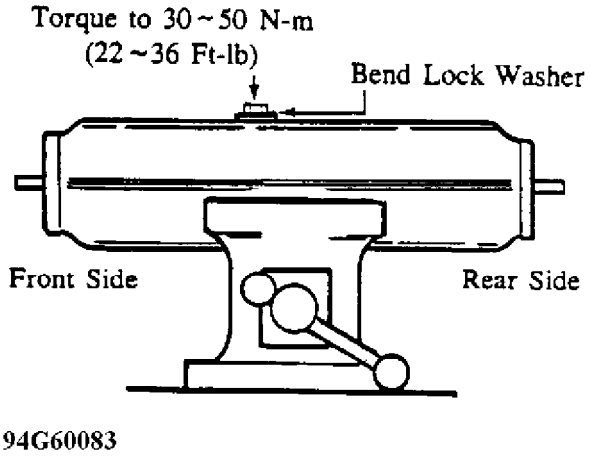

Fig. 17: Installing New Lock Washer on Converter

9. Hold the catalytic converter at an angle of 25ø-30ø in a vise again (see Fig. 15).
10. Put the funnel in drain hole No. 2 (rear side). See Fig. 18.

Copyright © 1998 Mitchell Repair Information Company, LLC
Saturday, September 08, 2001 09:59AM

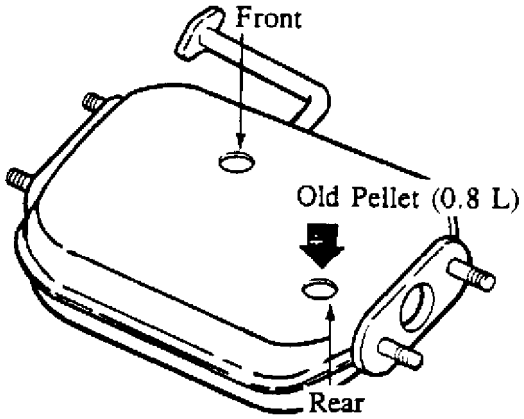

Fig. 18: Location of Drain Hole No. 2

11. Pour all the pellets from the plastic bag containing a smaller amount of pellets (0.6 L) into the drain hole No. 2. See Fig. 19.

NOTE: Do not forget that the remaining space (0.8L) in the rear of converter must later be filled with old pellets (see Fig. 19) from the converter removed from the customer's vehicle as described in Section IV-B, Step 8 through 11 below.

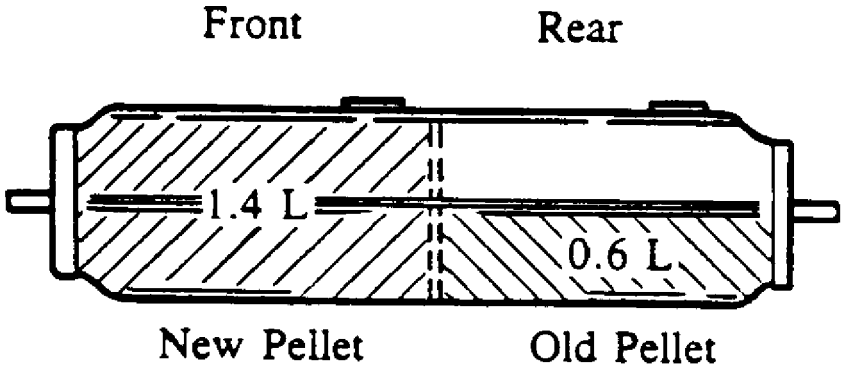

Fig. 19: Distribution of New and Old Pellets in Converter

12. Tighten the drain plug No. 2 temporarily.

B. Replacement of the Catalytic Converter

Following the procedure explained below,

i. remove the catalytic converter from the customer's vehicle,
ii. fill up the remaining space of the exchange converter with the old pellets removed from the customer's converter, and
iii. install the exchange converter on the customer's vehicle.

Copyright © 1998 Mitchell Repair Information Company, LLC
Saturday, September 08, 2001 09:59AM

CAUTION: * Allow the exhaust system to cool to avoid injury.
* Do not use air tool (impact wrenches) for loosening, because it may result in breakage of the bolt or stud.
* Lubricate the threads with penetrating oil before loosening the bolts and nuts to prevent them from breaking.

1. Lift the vehicle on a hoist.
2. Disconnect the split air pipe from the pellet converter.
3. Remove the catalytic converter lower cover (protector No. 2). See Fig. 20.

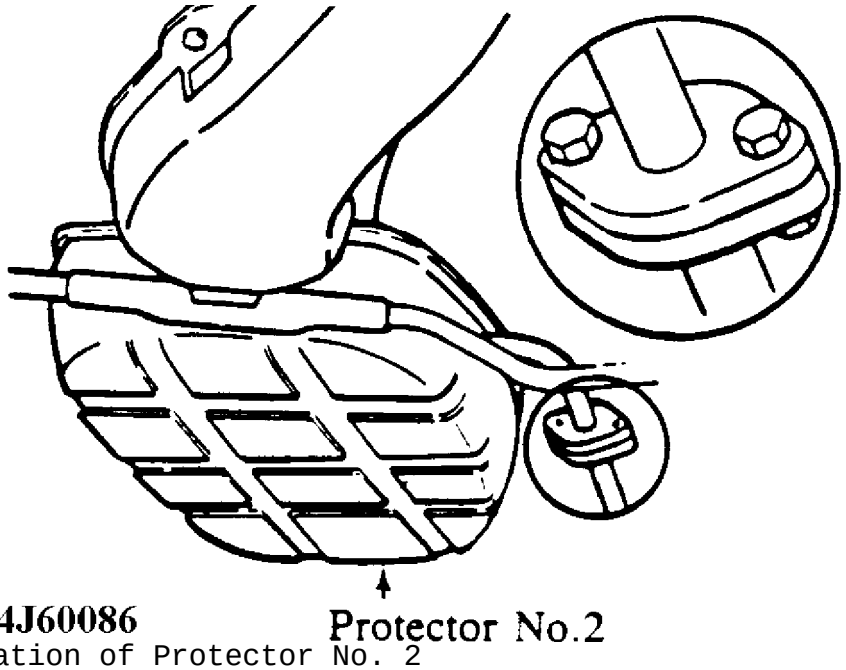

Fig. 20: Location of Protector No. 2

4. Remove the silencer hangers. See Fig. 21.

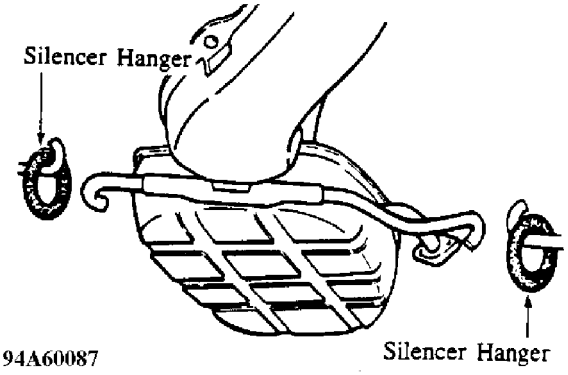

Fig. 21: Removing Silencer Hangers

5. Bend the tip of the exhaust pipe lower cover (protector No.4)

Copyright © 1998 Mitchell Repair Information Company, LLC
Saturday, September 08, 2001 09:59AM

by using pliers in order to get the space for loosening the catalytic converter nuts. See Fig. 22.

CAUTION: Be careful not to cut your fingers on the edge of the lower cover.

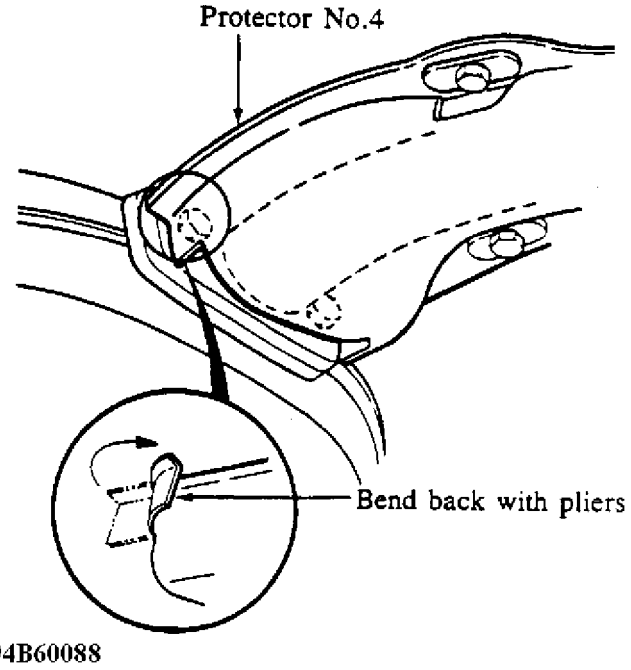

Fig. 22: Bending Back Tip of Exhaust Pipe Lowe Cover

6. Loosen the four nuts connecting the catalytic converter to the exhaust pipe and the monolith converter.

CAUTION: Lubricate the threads with penetrating oil before loosening the nuts to prevent the stud bolts from breaking. Breaking these studs would preclude re-use of the converter housing.

7. Remove the catalytic converter, pushing the exhaust pipe backward. See Fig. 23.

Copyright © 1998 Mitchell Repair Information Company, LLC
Saturday, September 08, 2001 09:59AM

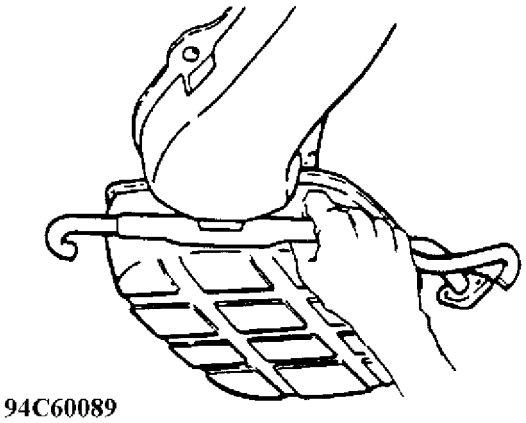

Fig. 23: Removing Catalytic Converter

8. Hold the removed converter level and securely in a vise as shown in Fig. 17. Remove the drain plug No. 2 (rear) and loosen the drain plug No. 1 (front) as shown in Fig. 14.

CAUTION: * Do not overtighten the vise.
* Do not remove the drain plug No. 1. Loosen only.

9. Remove the converter from the vise and remove all pellets from the rear of converter by shaking the converter over a clean pan that will catch the pellets.
10. Pour the pellets removed at Step 9 into the rear compartment (drain hole No. 2) of the previously-prepared exchange converter until it is full. Use the same procedure to fill up as described in Sec. IV-A.

NOTE: If the old pellets removed from the rear compartment are not enough to fill the rear compartment of the exchange converter, use old pellets from the front compartment (drain hole No. 1) of the removed converter.

11. Install a new lock washer and tighten the drain plug No. 2 of the exchange convener to the specified torque and bend the lock washer to prevent the plug from loosening. See Fig. 24.

Specified Torque: 30-50 N-m (22-36 ft-lb)

Copyright © 1998 Mitchell Repair Information Company, LLC
Saturday, September 08, 2001 09:59AM

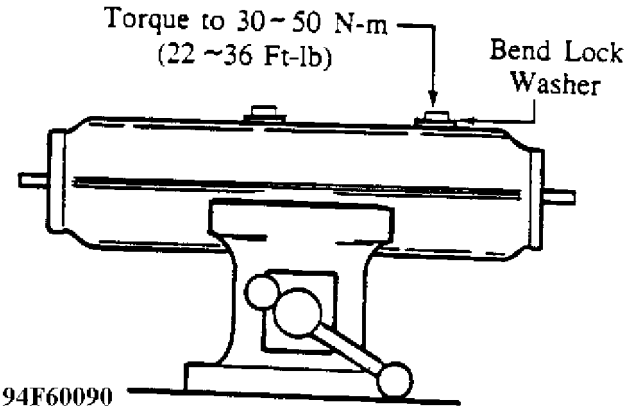

Fig. 24: Installing New Lock Washer on Converter

12. Install the exchange converter on the customer's vehicle using new gaskets, new spring washers and new nuts.

NOTE: Be sure to install the converter correctly. The drain plugs must be on the upper side.

13. Tighten the flange nuts to specified torque. See Fig. 25.

    Specified Torque: 55-80 N-m (41-59 ft-lb)

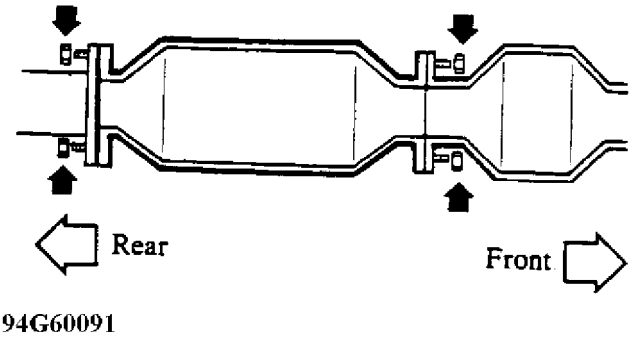

Fig. 25: Tightening Flange Nuts

14. Return the tip of the exhaust pipe lower cover to the original shape.

CAUTION: Be careful not to cut your fingers on the edge of the lower cover.

15. Re-install the pellet converter lower cover using new bolts.
16. Re-install the silencer hangers disconnected at Step 4.
17. Re-install the split air pipe using new gasket.

Copyright © 1998 Mitchell Repair Information Company, LLC
Saturday, September 08, 2001 09:59AM

18. Fill out the recall label with your dealer code and the repair date, then affix this label on the passenger side's door. See Fig. 26.

NOTE: For the 1982 RX-7, please confirm that the recall label (Campaign No. 21605) has been already attached on the inside passenger side's B pillar. If no label, please replace the charcoal canister in accordance with the repair procedure in the letter of "Recall Campaign Number 21605, 1982 RX-7 Evaporative Emission System."

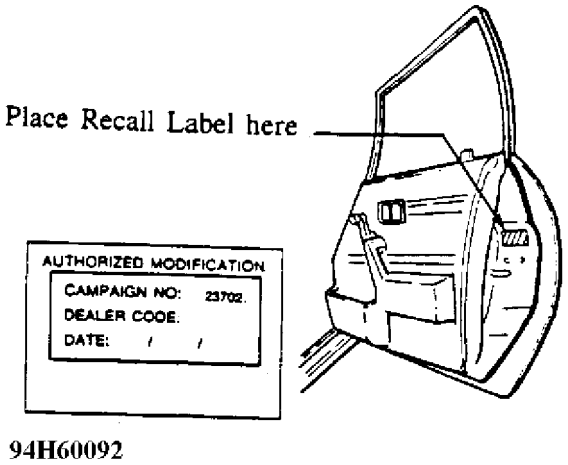

Fig. 26: Location to Affix Recall Label

19. Remove the drain plug No. 1 of the converter removed from the customer's vehicle and remove all pellets from the converter.
20. Put all old pellets (i.e., any leftover pellets from both of the front and rear compartments of the converter) into the plastic bag which originally contained the new pellets.
21. Fill out the warranty tag with all necessary information and attach it to the bag containing the old pellets. See Fig. 27.



Fig. 27: Tagging Returnable Pellets

22. Put 2 packs of the old pellets into the carton box which

Copyright © 1998 Mitchell Repair Information Company, LLC
Saturday, September 08, 2001 09:59AM

contained a recall kit.

23. Send the above carton box to our Warranty Department.
24. Inspect the converter housing to assure that it is suitable for re-use. If it is, prepare it to be ready for use as an exchange converter as described in Sec. IV-A. If it cannot be re-used, you must order an additional empty converter housing.

ÄÄÄ

CATALYST PELLETS & MODIFICATION OF SECONDARY AIR SYS
Article Text (p. 23)

Copyright © 1998 Mitchell Repair Information Company, LLC
Saturday, September 08, 2001 09:59AM

Mazda

END OF ARTICLE

IDLER ARM PIN BREAKAGE COULD CAUSE LOSS OF STEERING
Article Text

Copyright © 1998 Mitchell Repair Information Company, LLC
Saturday, September 08, 2001 09:57AM

ARTICLE BEGINNING

NHTSA RECALL BULLETIN

Model(s):	1983 Mazda GLC (FWD Sedan)
	1983 Mazda RX7
Campaign No:	85V108000
Number of Affected Vehicles:	136526
Beginning Date of Manufacture:	1976 DEC
Ending Date of Manufacture:	1983 FEB

VEHICLE DESCRIPTION:

Passenger cars with rear wheel drive.

SYSTEM:

Steering.

FAULT:

Locks up, Sticks, Grabs

DESCRIPTION OF DEFECT:

In certain high salt areas, the idler arm is exposed to road salt which causes the dust seal to deteriorate resulting in idler arm pin corrosion. This causes the pin to freeze and break.

CONSEQUENCE OF DEFECT:

A broken idler arm pin could result in loss of steering control and may cause an accident.

CORRECTIVE ACTION:

Replace pin with one of improved corrosion resistant quality.

ADDITIONAL INFORMATION:

The National Highway Traffic Safety Administration operates Monday through Friday from 8:00 AM to 4:00 PM, Eastern Time. For more information call (800) 424-9393 or (202) 366-0123. For the hearing impaired, call (800) 424-9153.

END OF ARTICLE

WIRING DIAGRAM SYMBOLS
Article Text

Copyright © 1998 Mitchell Repair Information Company, LLC
Saturday, September 08, 2001 10:05AM

ARTICLE BEGINNING

WIRING DIAGRAMS
How To Use The Wiring Diagrams

WIRING DIAGRAMS

INTRODUCTION

The wiring diagrams and technical service bulletins, containing wiring diagram changes, are obtained from the domestic and import manufacturers. These are checked for accuracy and are all redrawn into a consistent format for easy use.

All diagrams are arranged with the front of the vehicle at the left side of the first page and the rear of the vehicle at the right side of the last page. Accessories are shown near the end of the diagram.

Components are shown in their approximate location on the vehicle. Due to the constantly increasing number of components on vehicles today, it is impossible to show exact locations.

In the past, when cars were simpler, diagrams were simpler. All components were connected by wires, and diagrams seldom exceeded 4 pages in length. Today some wiring diagrams require more than 16 pages. It would be impractical to expect a service technician to trace a wire from page 1 across every page to page 16.

Removing some of the wiring maze reduces eyestrain and time wasted searching across several pages. Today, the majority of diagrams now follow a much improved format, which permits space for internal switch details and connector shapes.

Any wires that don't connect directly to their components are identified on the diagram to indicate where they go. There is a legend on the first page of each diagram, detailing component location. It refers you to sub-systems, using grid NUMBERS at the top and bottom of the page and grid LETTERS on each side. This grid system works in a manner similar to that of a road map.

HOW TO USE THE WIRING DIAGRAMS

1) On the first page of the diagram, you will find a listing of major electrical components or systems. Locate the specific component or system you wish to trace. A grid number and letter will follow the component's name.

2) Use the grid NUMBERS (arranged horizontally across the top and bottom of each page) to find the page of the wiring diagram that contains the component you're seeking. When you reach this page, use the grid LETTERS on the side of the page to determine the component's vertical location.

3) Locate the circuit you need to service. The internals are shown for switches and relays to assist you in understanding how the circuit operates.

NOTE: In some of the newer wiring diagram articles in this

WIRING DIAGRAM SYMBOLS
Article Text (p. 2)

Copyright © 1998 Mitchell Repair Information Company, LLC
Saturday, September 08, 2001 10:05AM

product, there is a Legend for the wiring diagrams that has been created to make locating components easier. For these articles, there will be a COMPONENT LOCATION MENU title in the article main menu. These articles will also have the original legend available on the first graphic.

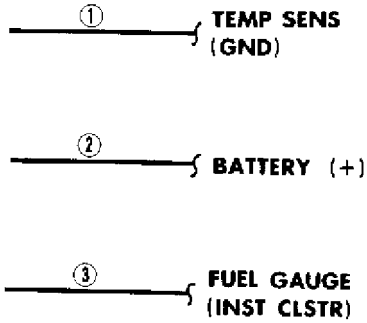

Fig. 1: Identifying Tie-Off Symbols

4) If the wires are not drawn all the way to another component (across several pages), a reference will tell you their final destination.

5) Again, use the legend on the first page of the wiring diagram to determine the grid number and letter of the referenced component. You can then turn directly to it without tracing wires across several pages.

6) The symbols shown in Fig. 1 are called tie-offs. The first tie-off shown indicates that the circuit goes to the temperature sensor, and is also a ground circuit.

7) The second symbol indicates that the circuit goes to a battery positive parallel circuit. The third symbol leads to a particular component and the location is also given.

8) The lines shown in Fig. 2 are called options. Which path or option to take depends on what engine or systems the vehicle has.

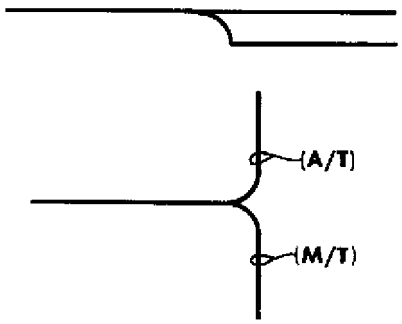

Fig. 2: Identifying Option Symbols

COLOR ABBREVIATIONS IDENTIFICATION

COLOR ABBREVIATIONS

Color	Normal	Optional
Black	BLK	BK

WIRING DIAGRAM SYMBOLS
Article Text (p. 3)

Copyright © 1998 Mitchell Repair Information Company, LLC
Saturday, September 08, 2001 10:05AM

Blue	BLU		BU
Brown	BRN		BN
Clear	CLR		CR
Dark Blue	DK BLU		DK BU
Dark Green	DK GRN		DK GN
Green	GRN		GN
Gray	GRY		GY
Light Blue	LT BLU		LT BU
Light Green	LT GRN		LT GN
Orange	ORG		OG
Pink	PNK		PK
Purple	PPL		PL
Red	RED		RD
Tan	TAN		TN
Voilet	VIO		VI
White	WHT		WT
Yellow	YEL		YL

WIRING DIAGRAM SYMBOL IDENTIFICATION

NOTE: Standard wiring symbols are used on diagrams. The list below will help clarify any symbols that are not easily understood at a glance. Most components are labeled "Motor", "Switch" or "Relay" in addition to being drawn with the standard symbol.

WIRING DIAGRAM SYMBOLS

Views of the symbols used in the WIRING DIAGRAM articles are in the following graphics. See Figs. 3 through 25.



Fig. 3: Circuit Breaker

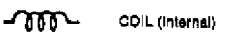

Fig. 4: Coil (Internal)



Fig. 5: Connector

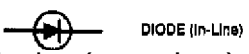

Fig. 6: Diode (In-Line)



Fig. 7: Diode (Internal)

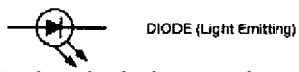

Fig. 8: Diode (Light Emitting)

WIRING DIAGRAM SYMBOLS
Article Text (p. 4)

Copyright © 1998 Mitchell Repair Information Company, LLC
Saturday, September 08, 2001 10:05AM



Fig. 9: Defogger Grid



Fig. 10: Fuse



Fig. 11: Fusible Link



Fig. 12: Ground

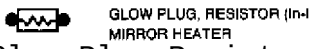

Fig. 13: Glow Plug Resistor (In-Line) or Mirror Heater



Fig. 14: Injector (Diesel) or Photocell (Gasoline)



Fig. 15: Internal Fuse, Thermal Limiter



Fig. 16: Lamp (Dual Element)

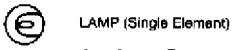

Fig. 17: Lamp (Single Element)



Fig. 18: Motor



Fig. 19: Resistor (Internal)

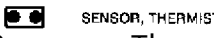

Fig. 20: Sensor, Thermistor



Fig. 21: Solenoid



Fig. 22: Solid State Device, Transistor

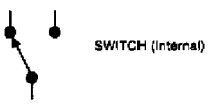

Fig. 23: Switch (Internal)

WIRING DIAGRAM SYMBOLS
Article Text (p. 5)

Copyright © 1998 Mitchell Repair Information Company, LLC
Saturday, September 08, 2001 10:05AM

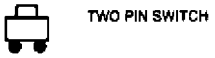

Fig. 24: Two Pin Switch

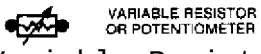

Fig. 25: Variable Resistor or Potentiometer

END OF ARTICLE

WIRING DIAGRAMS
Article Text

Copyright © 1998 Mitchell Repair Information Company, LLC
Saturday, September 08, 2001 10:05AM

ARTICLE BEGINNING

1983 Wiring Diagrams
Mazda

RX7

IDENTIFICATION

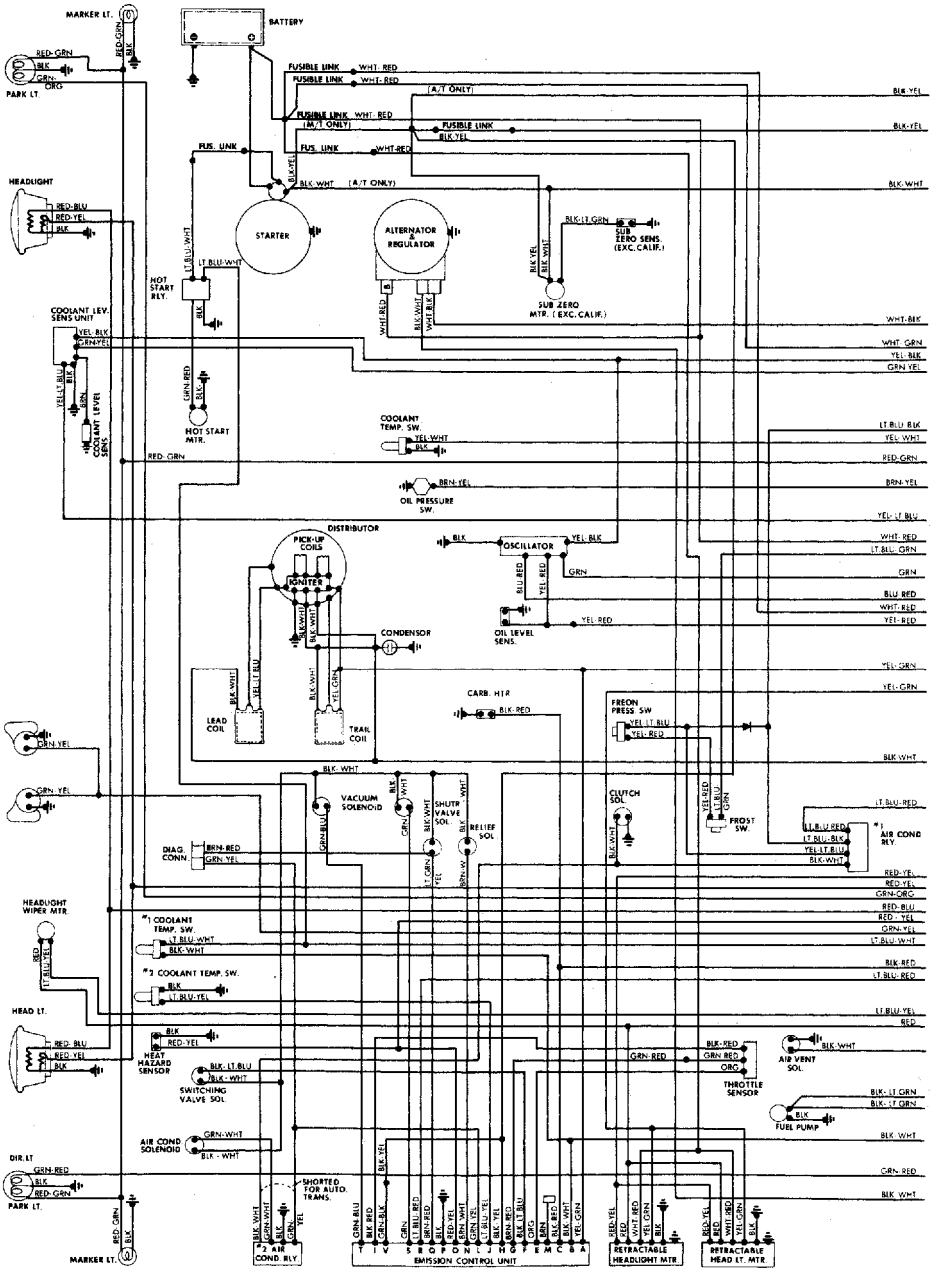

96119

Fig. 1: Engine Compartment

Copyright © 1998 Mitchell Repair Information Company, LLC
Saturday, September 08, 2001 10:05AM

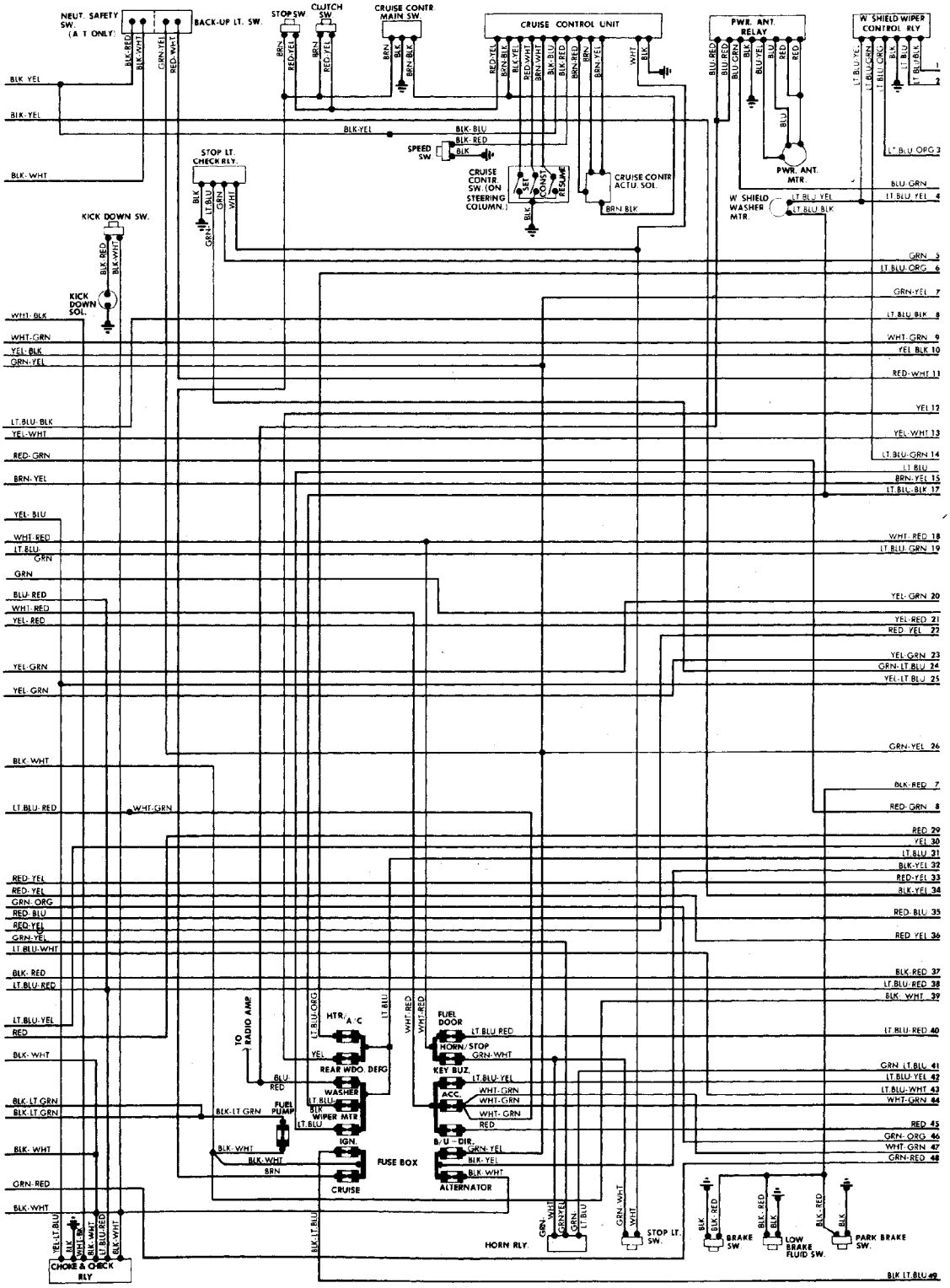

96120

Fig. 2: Fuse Block & Underdash

Copyright © 1998 Mitchell Repair Information Company, LLC
Saturday, September 08, 2001 10:05AM

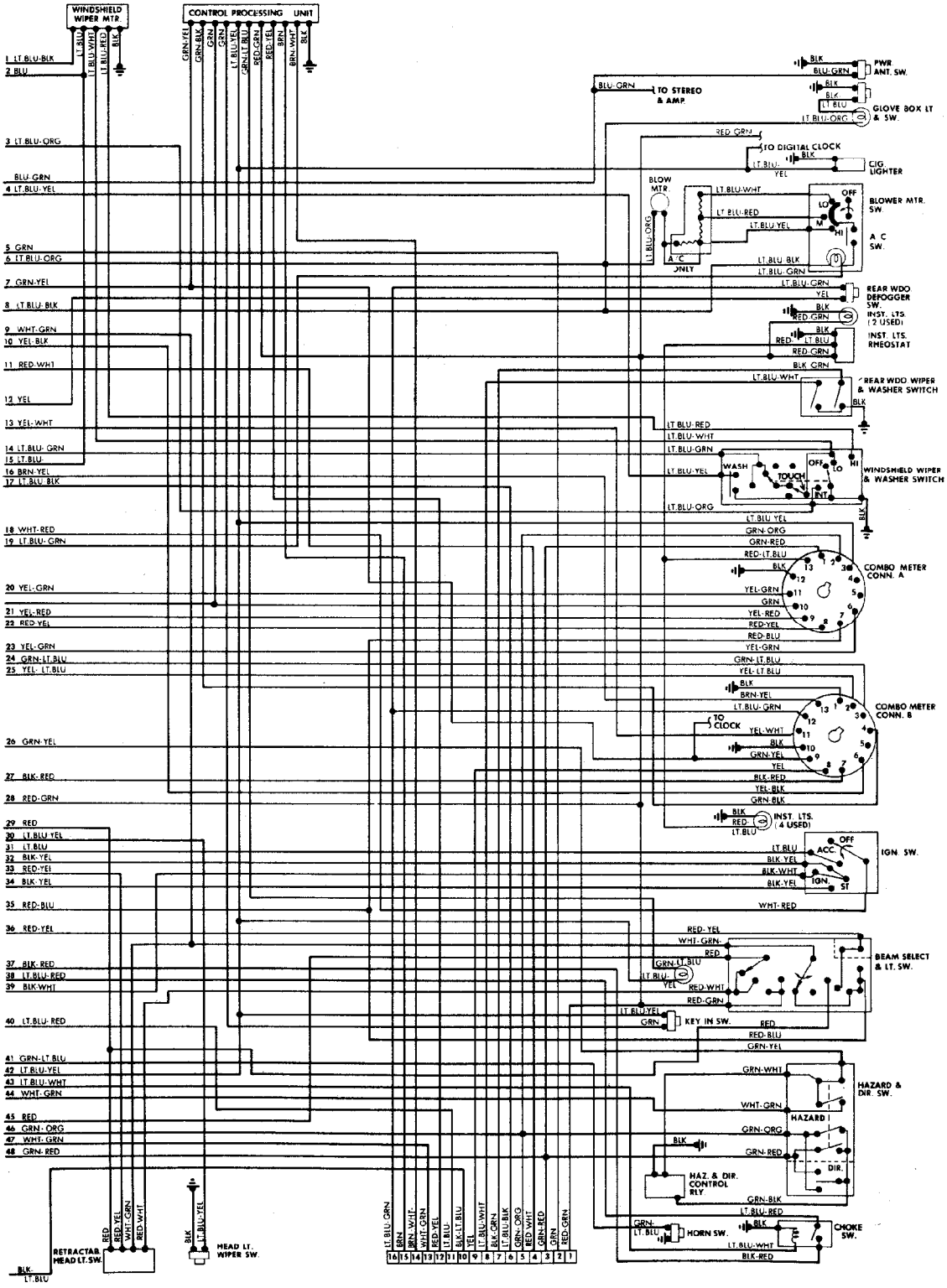

96121

Fig. 3: Underdash (Cont.) & Instrument Panel

WIRING DIAGRAMS
Article Text (p. 4)

Copyright © 1998 Mitchell Repair Information Company, LLC
Saturday, September 08, 2001 10:05AM

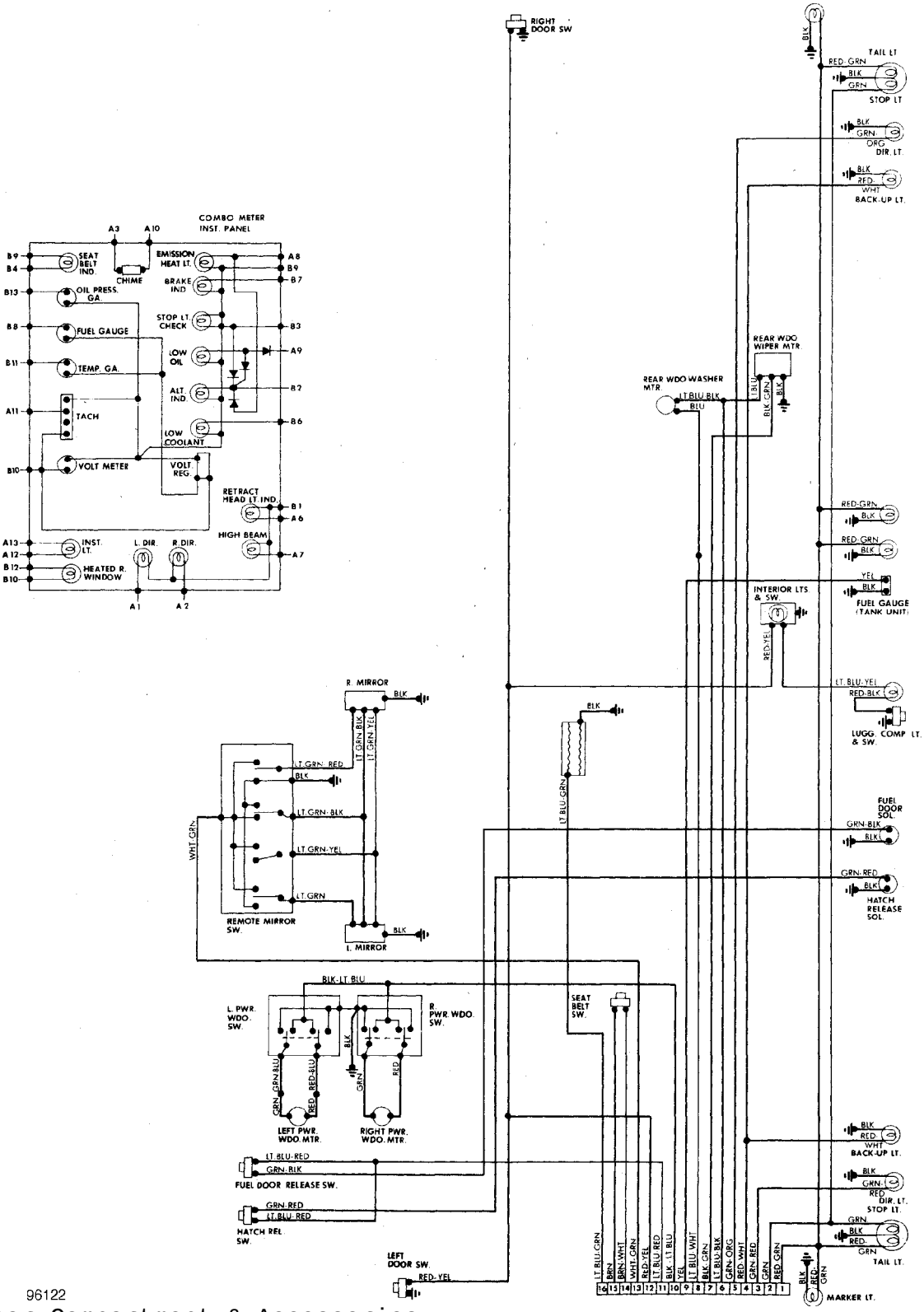

96122

Fig. 4: Rear Compartment & Accessories

END OF ARTICLE