Parts Catalog

Mazda RX-7
U.S.A.
('84-'85)

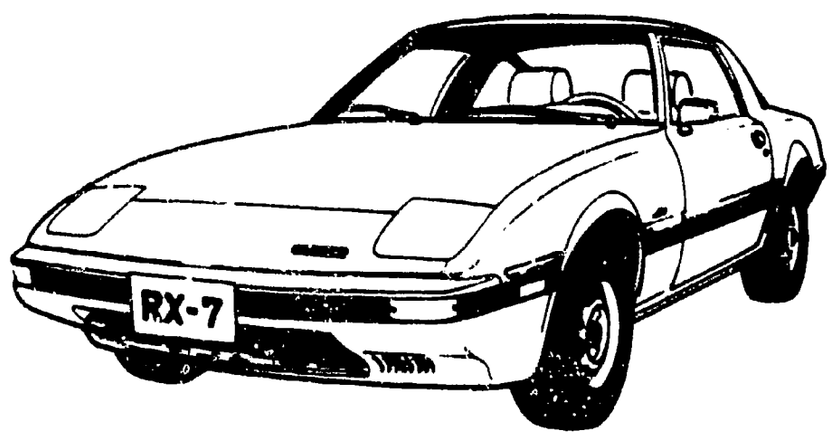

(FR33•-800001~ 990000)

Aug. '91

mazda

PICTORIAL INDEX

ROTARY ENGINE (1/2)

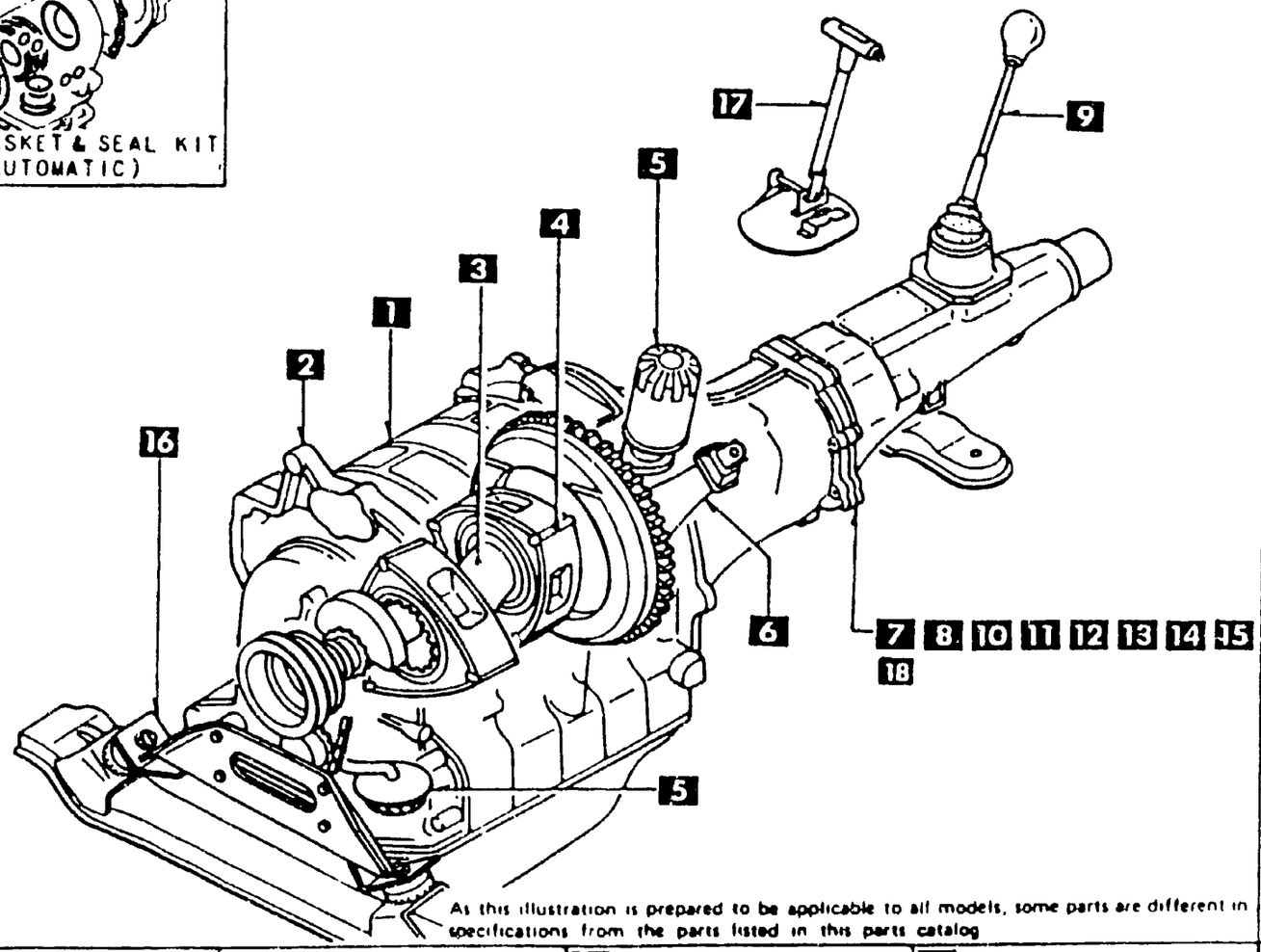

As this illustration is prepared to be applicable to all models, some parts are different in specifications from the parts listed in this parts catalog

1000A

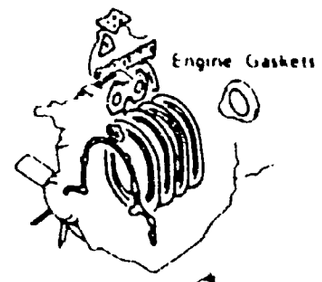

T/mission Gaskets

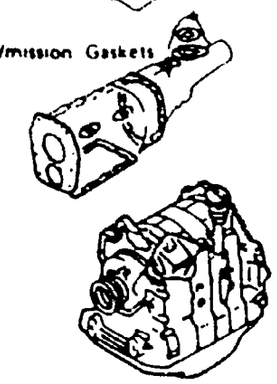

SHORT ENGINE & GASKET SETS

1 1030A

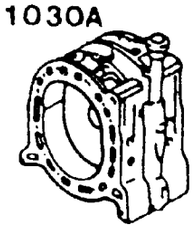

ROTOR HOUSING

2 1040A



OIL PAN & FRONT & REAR HOUSINGS

3 1100A

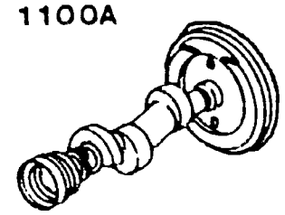

ECCENTRIC SHAFT & FLYWHEEL

4 1110A



ROTOR & RELATED

5 1400A

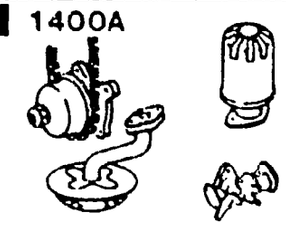

OIL PUMP & FILTER

18 1960A

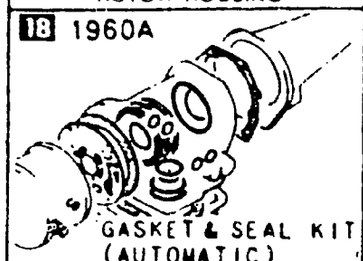

GASKET & SEAL KIT (AUTOMATIC)

6 1600A

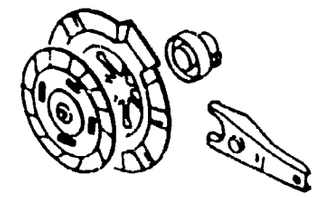

CLUTCH (MANUAL)

7 1700A

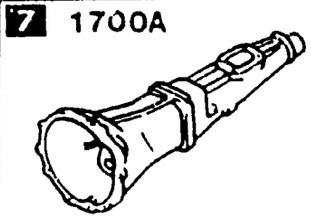

T/MISSION CASE (MANUAL)

17 4600A

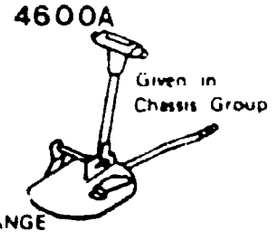

CHANGE CONTROLS (MANUAL)

8 1710A

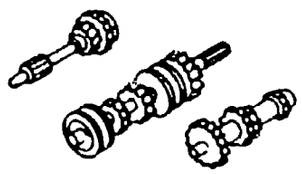

T/MISSION GEARS (MANUAL)

16 3900A

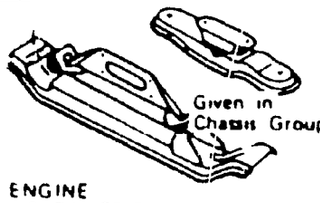

ENGINE & T/MISSION MOUNTINGS

9 1720A

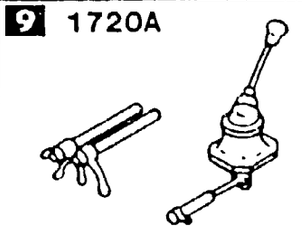

CHANGE CONTROLS (MANUAL)

15 1950A

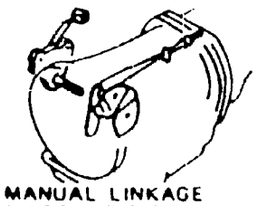

MANUAL LINKAGE (AUTOMATIC T/MISSION)

14 1940A

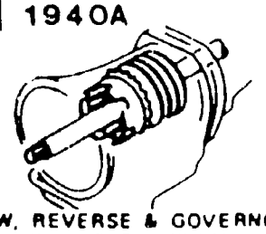

LOW, REVERSE & GOVERNOR (AUTOMATIC T/MISSION)

13 1930A

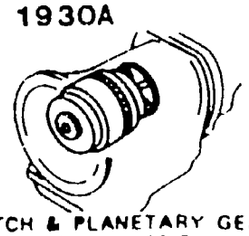

CLUTCH & PLANETARY GEARS (AUTOMATIC T/MISSION)

12 1920A

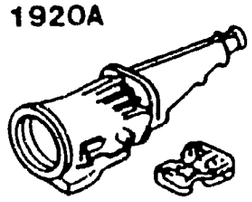

CASE & MAIN CONTROLS (AUTOMATIC T/MISSION)

11 1910A

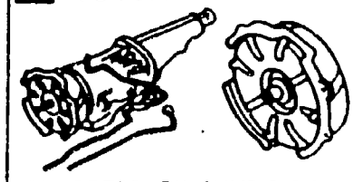

CONVERTER, OIL PUMP & PIPING (AUTOMATIC T/MISSION)

10 1900A

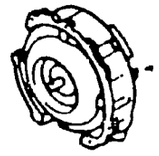

TORQUE GLIDE (MANUAL)

PICTORIAL INDEX

1 1300A

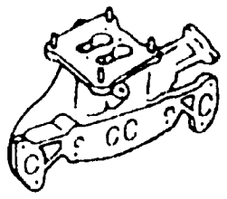

IN MANIFOLD

2 1310A

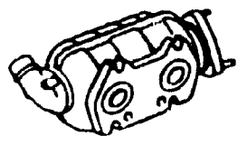

THERMAL REACTOR

3 1320A

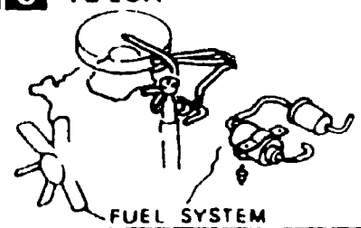

FUEL SYSTEM

4 1330A

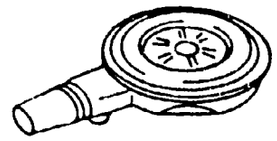

AIR CLEANER

5 1350A

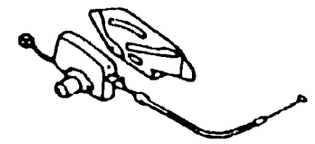

STARTING ASSIST SYSTEM

6 1359A,1360A

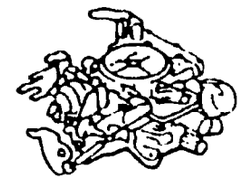

CARBURETOR

ROTARY ENGINE (2/2)

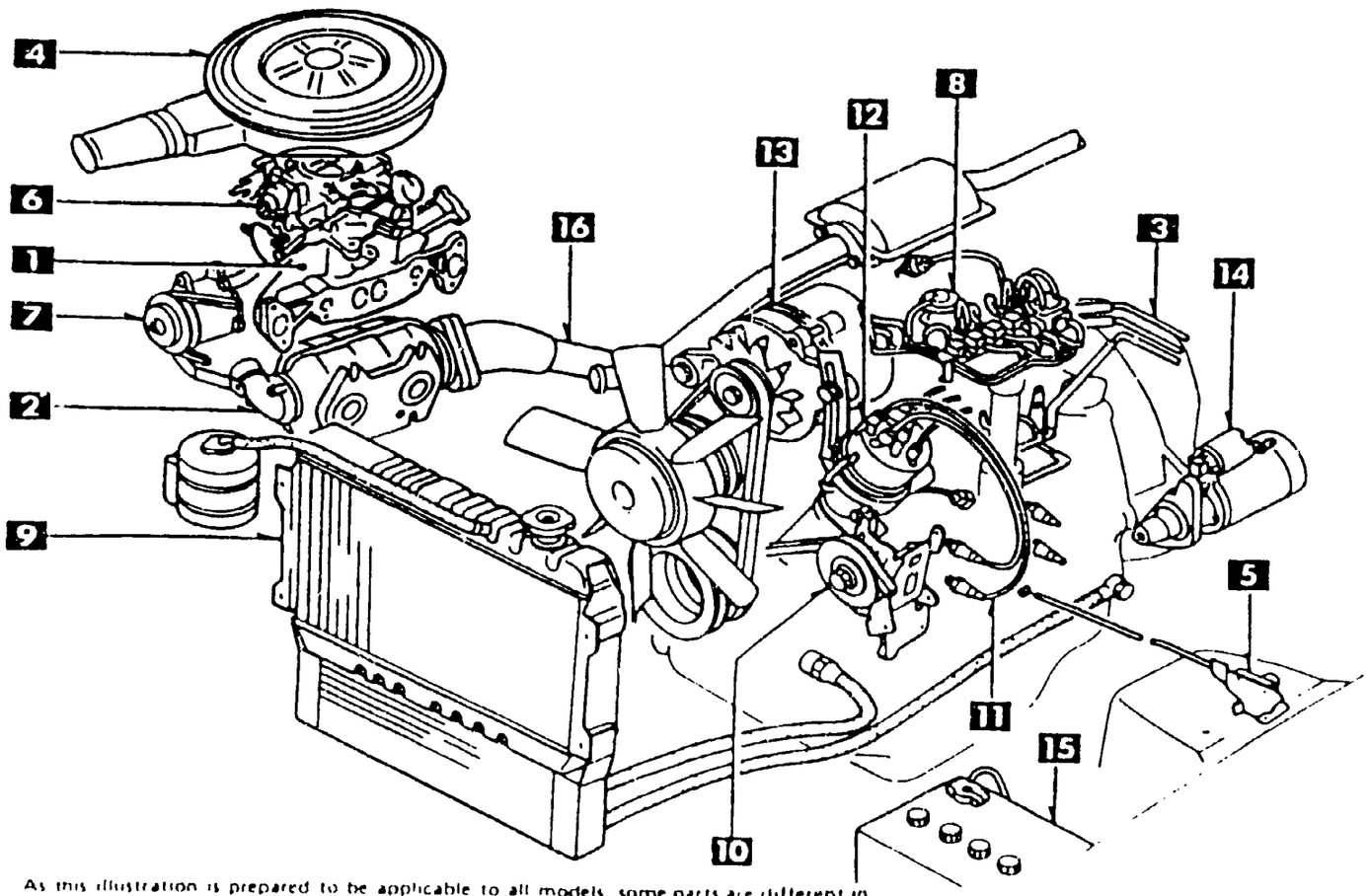

As this illustration is prepared to be applicable to all models some parts are different in specifications from the parts listed in this parts catalog

7 1371A



EMISSION CONTROLS (AIR PUMP & CONTROL VALVE)

8 1380A

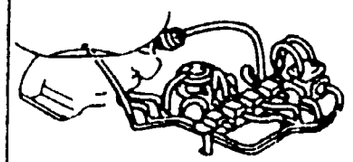

EMISSION CONTROLS (EX. SIDE)

9 1500A

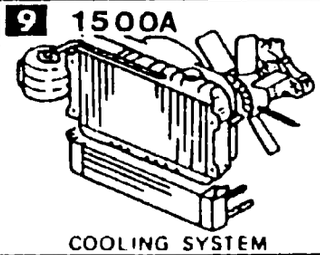

COOLING SYSTEM

10 1580A

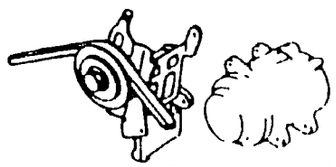

COMPRESSOR BRACKET PULLEY & BELT (AIR CONDITIONER)

16 4000A

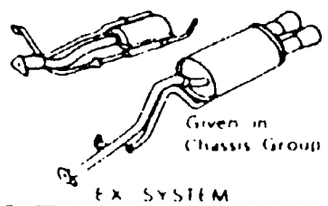

EX. SYSTEM

15 1850A

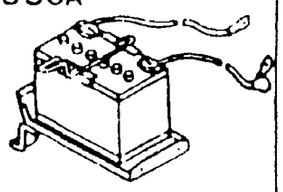

BATTERY & CABLES

14 1840A

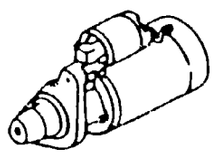

STARTER

13 1830A

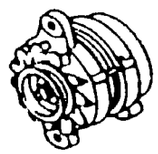

ALTERNATOR

12 1820A

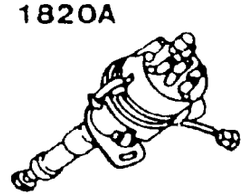

DISTRIBUTOR

11 1800A

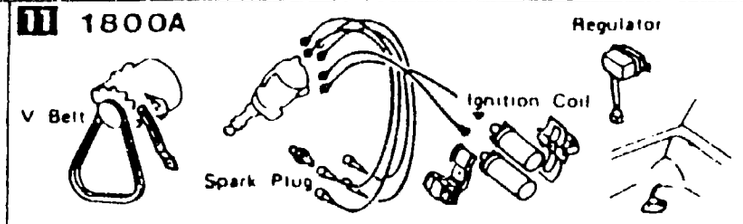

ELECTRICAL SYSTEM (ENGINE)

PICTORIAL INDEX

1 2500A

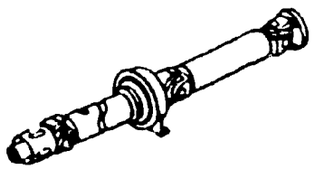

PROPELLER SHAFT

2 2600A

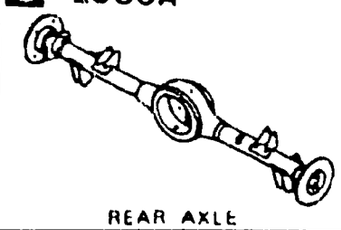

REAR AXLE

3 2610A

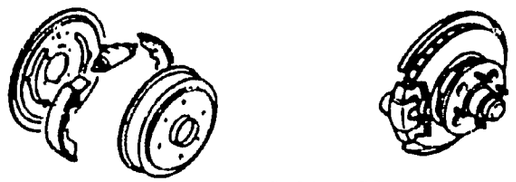

REAR BRAKES

4 2700A

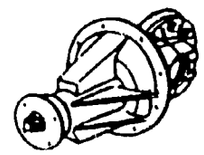

DIFFERENTIAL

5 2800A
2810A

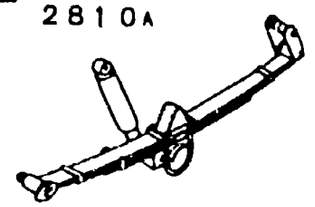

REAR STABILIZER
REAR SUSPENSION

16 4600A

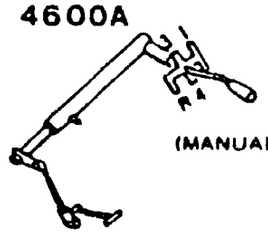

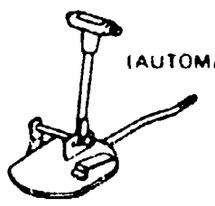

CHANGE CONTROLS

17 1720A

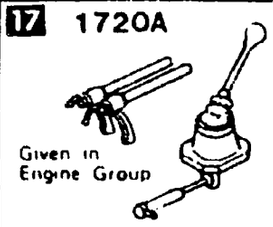

CHANGE CONTROLS (MANUAL)

CHASSIS (1/2)

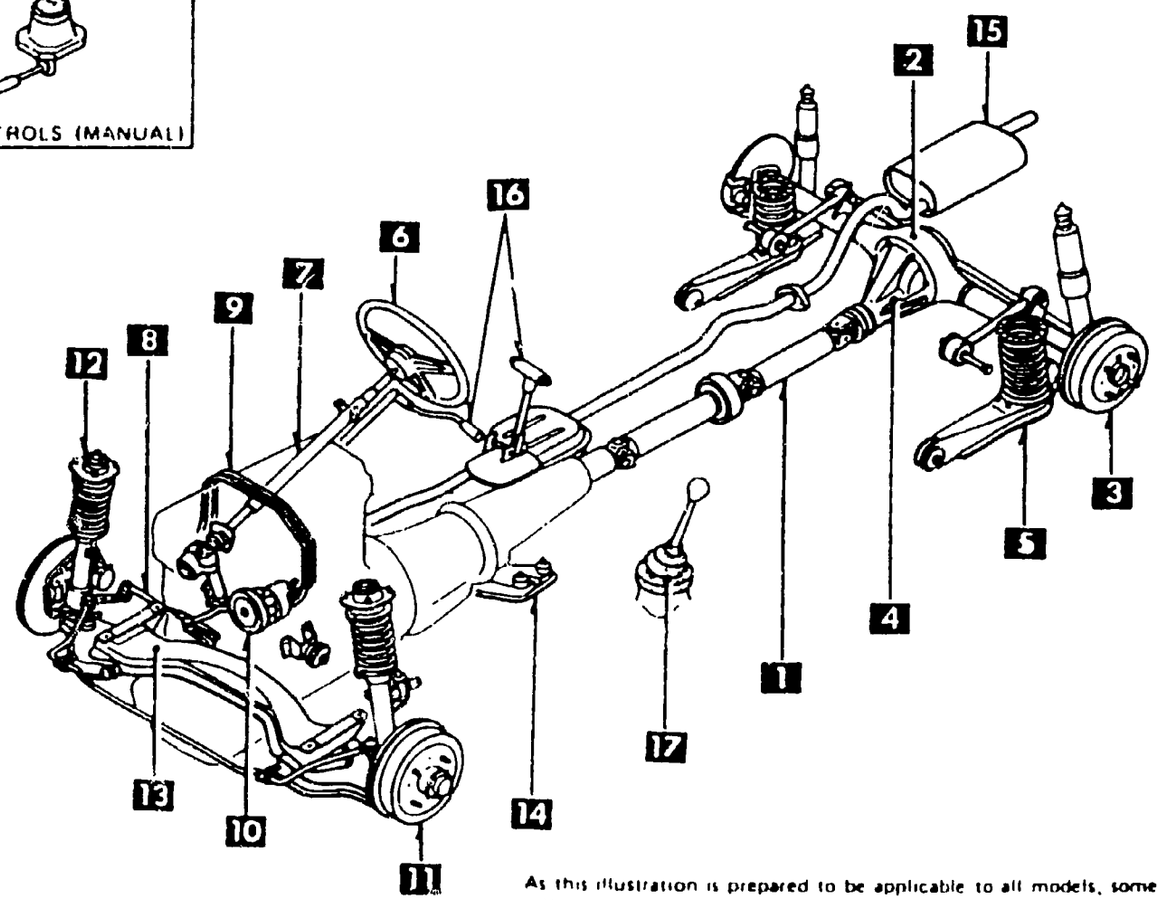

6 3200A



STEERING WHEEL

15 4000A

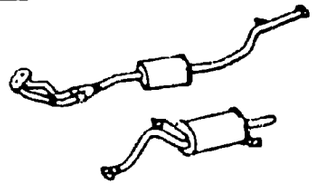

EX SYSTEM

7 3210A

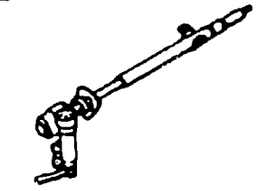

STEERING GEAR & COLUMN

14 3900A

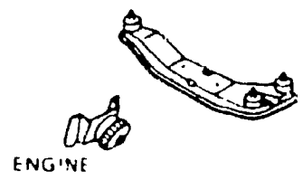

ENGINE
& T/MISSION MOUNTINGS

8 3230A

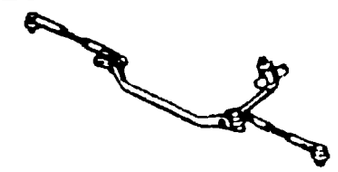

STEERING LINKAGE

As this illustration is prepared to be applicable to all models, some parts are different in specifications from the parts listed in this parts catalog

13 3410A

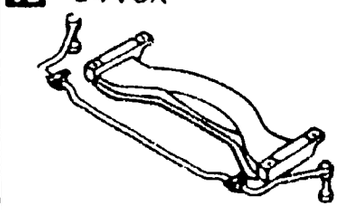

CROSSMEMBER & STABILIZER

12 3400A

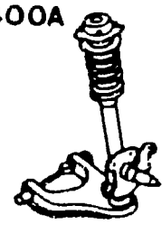

FRONT SUSPENSION

11 3300A



FRONT AXLE & BRAKES

10 3260A

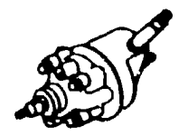

VANE PUMP (POWER STEERING)

9 3240A

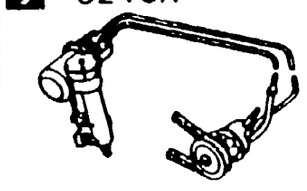

POWER STEERING SYSTEM

PICTORIAL INDEX

1 3700A

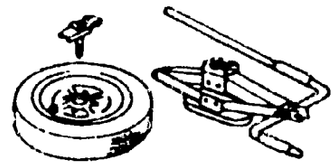

TIRE & JACK

2 4140A

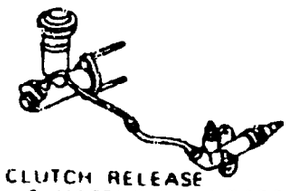

CLUTCH RELEASE & MASTER CYLINDERS

3 4160A

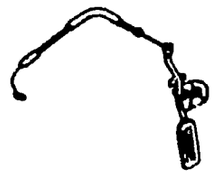

ACCELERATOR CONTROLS

4 4200A

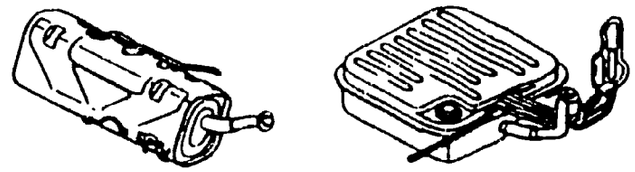

FUEL TANK

5 4300A

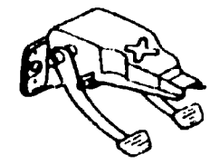

CLUTCH & BRAKE

CHASSIS (2/2)

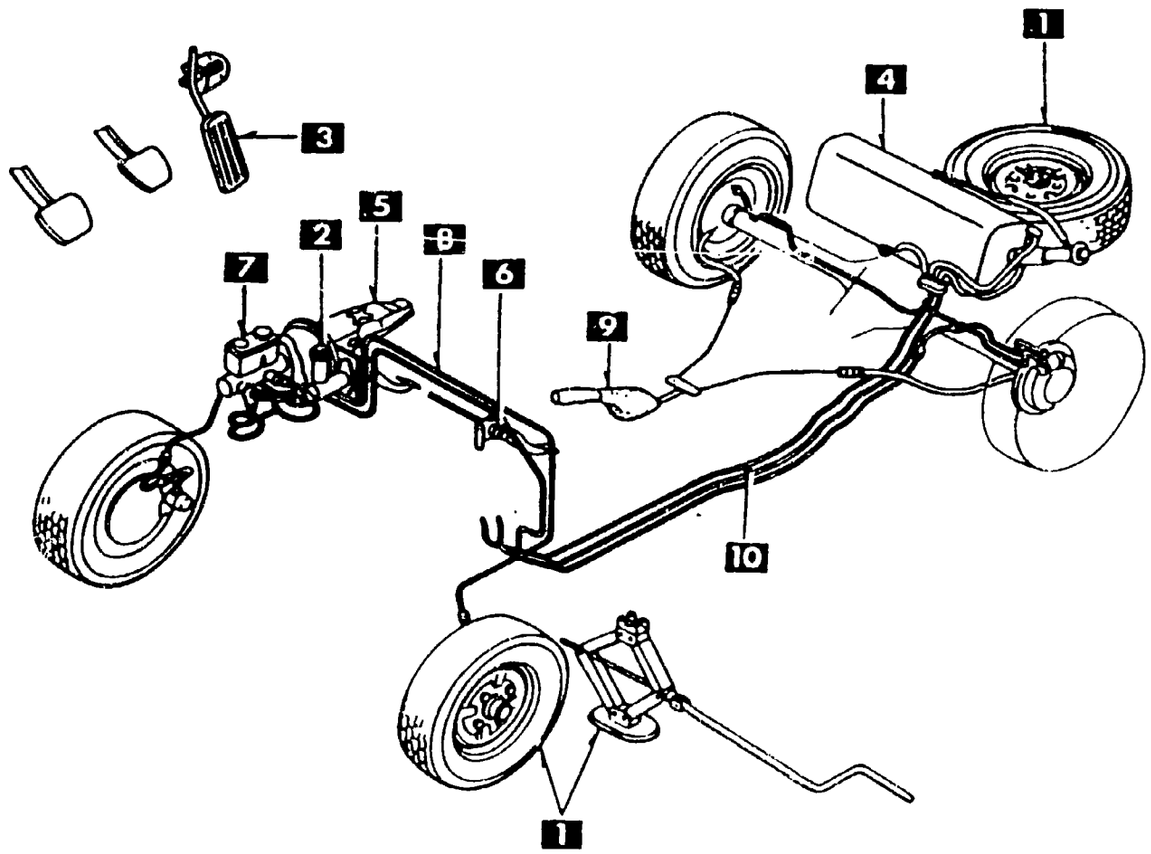

As this illustration is prepared to be applicable to all models, some parts are different in specifications from the parts listed in this parts catalog.

6 4310A

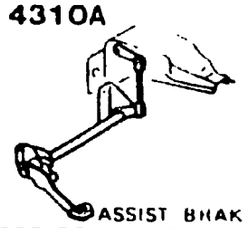

ASSIST BRAKE (FOR DRIVING SCHOOL)

7 4340A

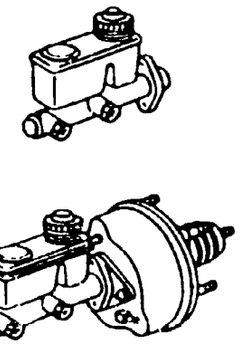

TANDEM MASTER CYL & VACUUM POWER ASSIST SYSTEM

8 4360A



BRAKE PIPING

10 4500A

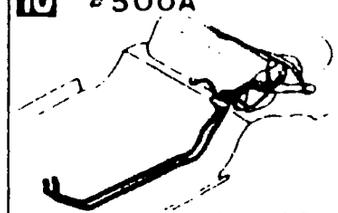

FUEL & EVAPORATION PIPINGS

9 4400A



PARKING BRAKE SYSTEM

PICTORIAL INDEX

1 0900A

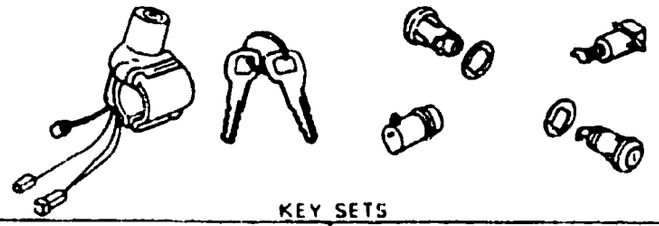

KEY SETS

2 5020A

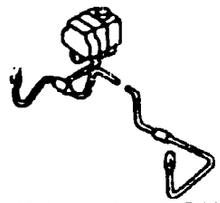

HEAD LAMP CLEANER

3 5100A • 5105A • 5103A



HEADLAMP RETRACTOR
LAMPS (FRONT & SIDE)

4 5110A • 5120A
5125A

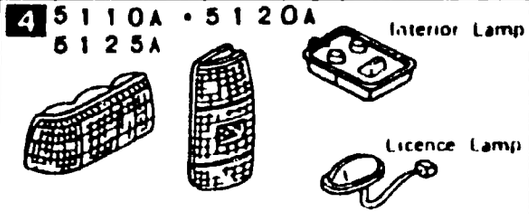

LAMPS (REAR & INTERIOR)

BODY(1/3)

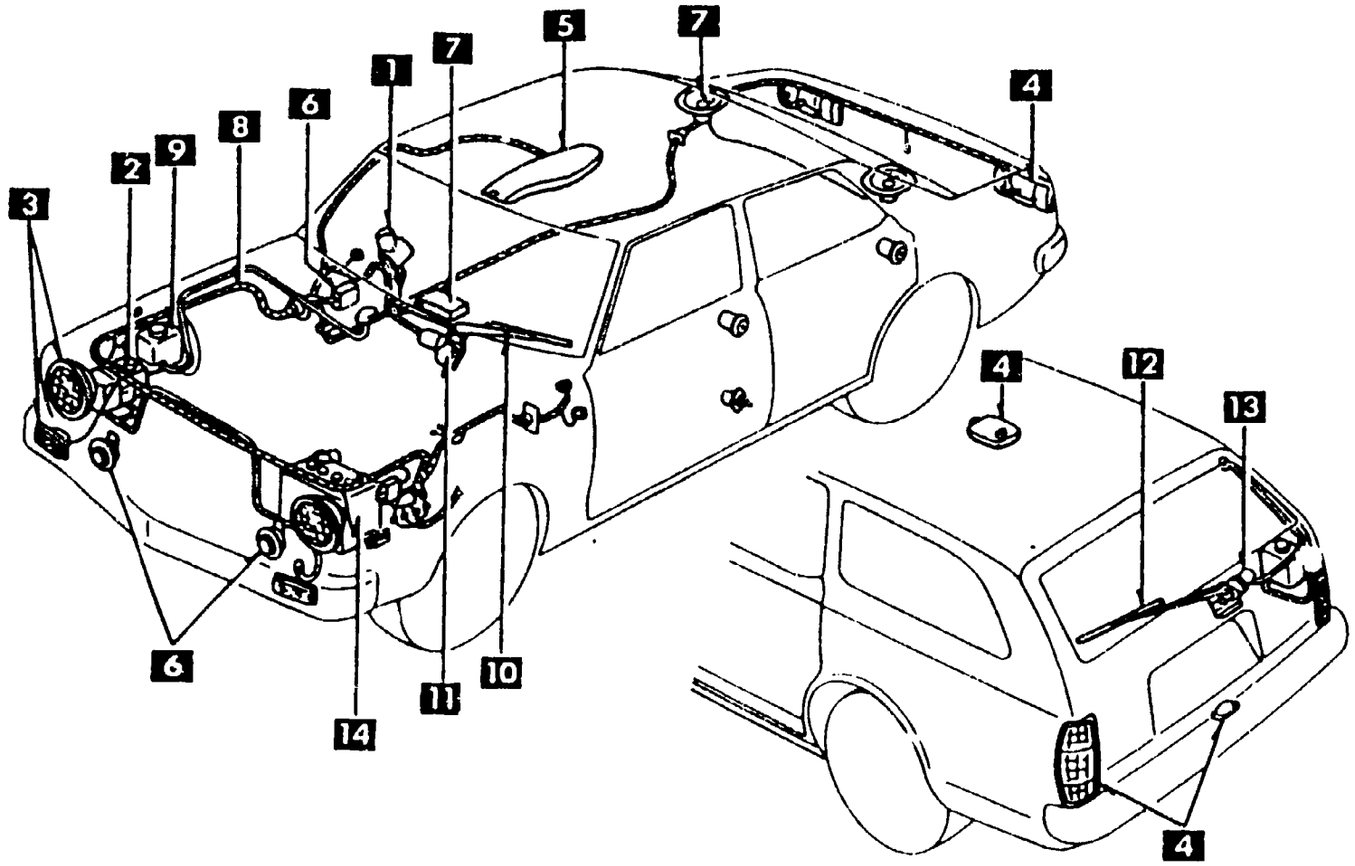

As this illustration is prepared to be applicable to all models some parts are different in specifications from the parts listed in this parts catalog

5 5130A

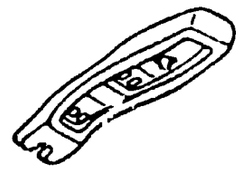

OVERHEAD CONSOLE

6 6600A·6610A
6611A·6612A
6613A·6615A
6620A
6630A
6635A
6640A

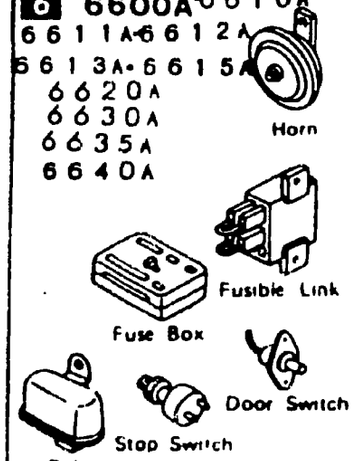

ELECTRIC EQUIPMENT (BODY)

7 6680A,6682A, 6684A
6690A



RADIO & STEREO SYSTEMS

14 1850A

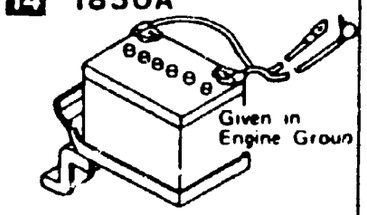

BATTERY & CABLES

13 6760A

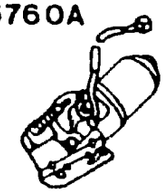

REAR WINDOW WIPER MOTOR
(COMPONENTS ONLY)

12 6750A

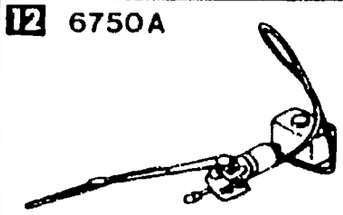

REAR WINDOW WIPER & WASHER

11 6740A



WIPER MOTOR
(COMPONENTS ONLY)

10 6730A

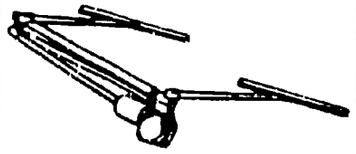

WINDSHIELD WIPER

9 6720A

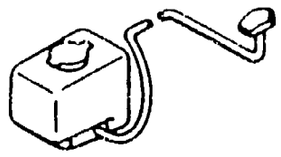

WINDSHIELD WASHER

8 6700A·6701A·6702A·6703A·6704A

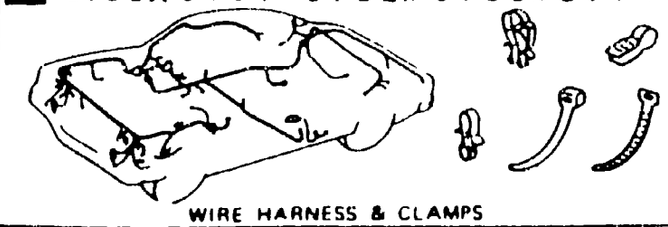

WIRE HARNESS & CLAMPS

PICTORIAL INDEX

1 5000A・5005A



FRONT BUMPER & GRILLE

2 5010A

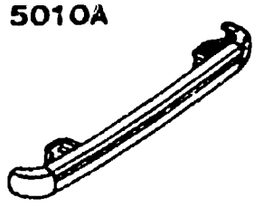

REAR BUMPER

3 5030A

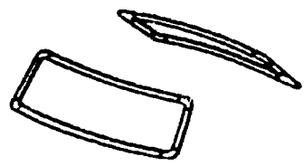

WINDOW MOULDINGS

4 5040A・5060A
5080A

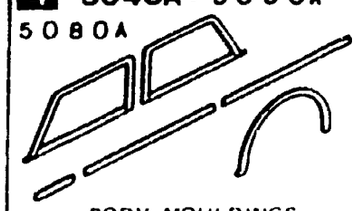

BODY MOULDINGS

5 5170A・5180A
5190A

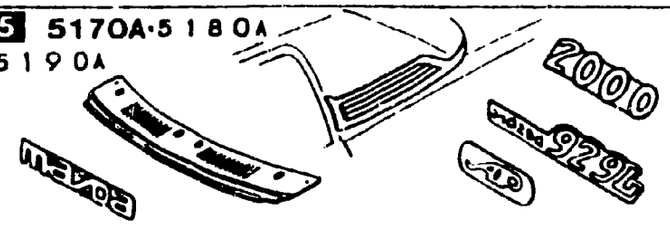

COWL & EXTRACTOR GRILLES & ORNAMENTS

18 7250A

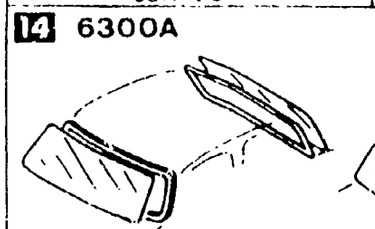

(2 DOOR TYPE)

REAR WINDOW GLASS & TRIM

17 7230A

REAR DOOR MECHANISMS

16 7200A REAR DOOR

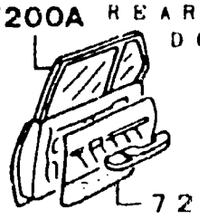

7240A

TRIM&ARMREST

15 6330A

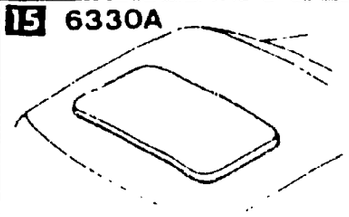

SUNROOF

BODY(2/3)

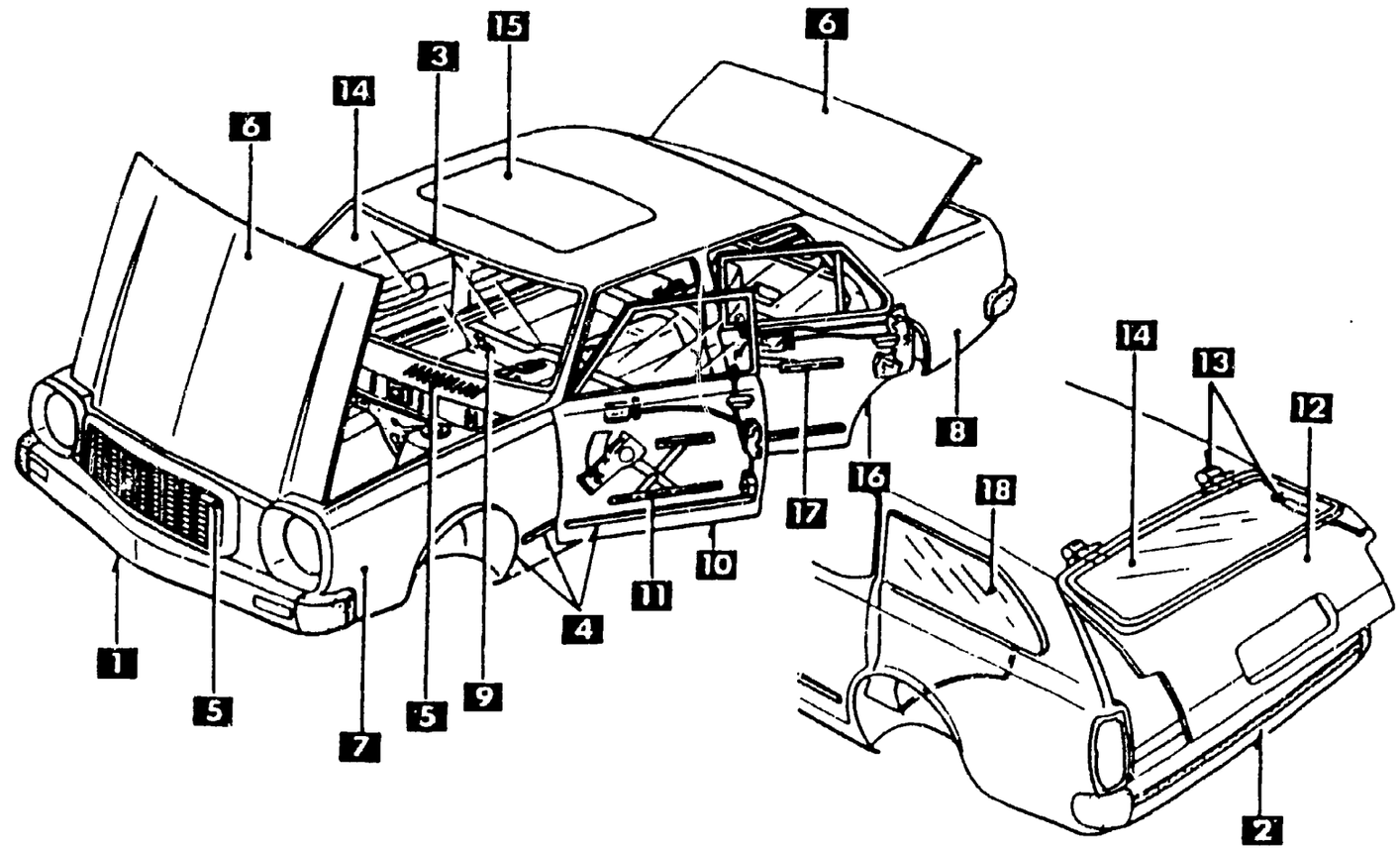

As this illustration is prepared to be applicable to all models, some parts are different in specifications from the parts listed in this parts catalog

6 5230A

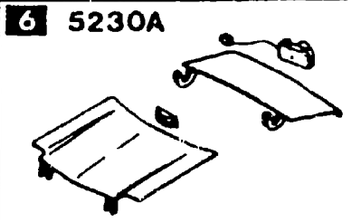

BONNET & TRUNK LID

7 5310A,5320A,5330A

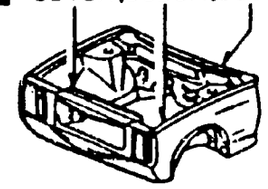

BODY PANELS (FRONT)

8 5340A,5360A

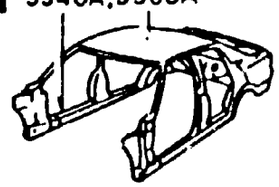

BODY PANELS (SIDE & ROOF)

9 5370A,5390A

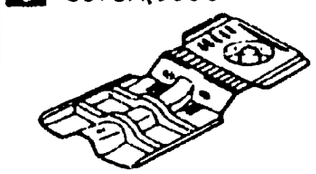

'FLOOR 'ATTACHMENT'.

BODY PANELS (FLOOR)

14 6300A

WINDOW GLASSES

13 6230A

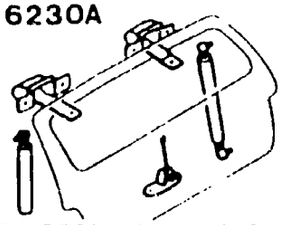

BACK DOOR MECHANISMS

12 6200A

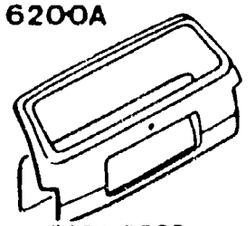

BACK DOOR

11 5830A

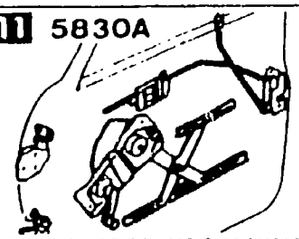

FRONT DOOR MECHANISMS

10 5800A FRONT DOOR

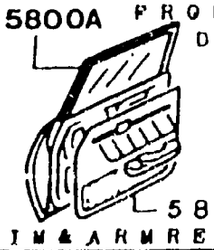

5840A

TRIM&ARMREST

PICTORIAL INDEX

1 5500A

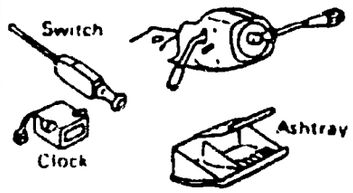

DASHBOARD EQUIPMENT

2 5540A · 5520A
5530A

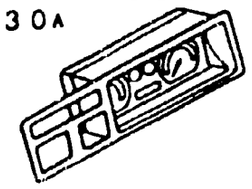

METERS

3 5560A
5550A

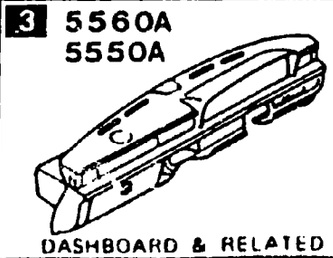

DASHBOARD & RELATED

4 5570A

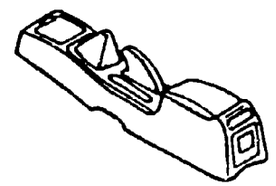

CONSOLE

5 5580A

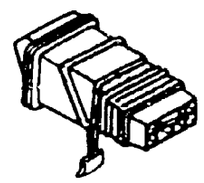

VENTILATOR

6 5700A
5710A
5720A
5730A

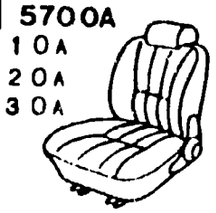

FRONT SEAT

17 6930A

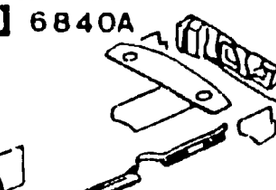

CAUTION PLATES

16 6900A

VISOR, ASSIST HANDLE & MIRRORS

15 6870A

SERVICE TOOLS

14 6860A

FLOOR MATS & PADS

BODY(3/3)

As this illustration is prepared to be applicable to all models, some parts are different in specifications from the parts listed in this parts catalog

7 5750A · 5760A
5770A
5780A
5720A

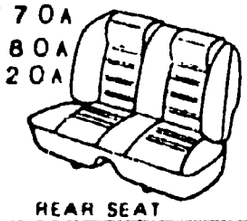

REAR SEAT

8 5790A

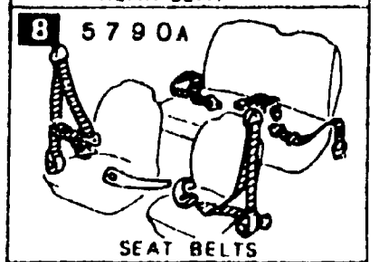

SEAT BELTS

9 6100A

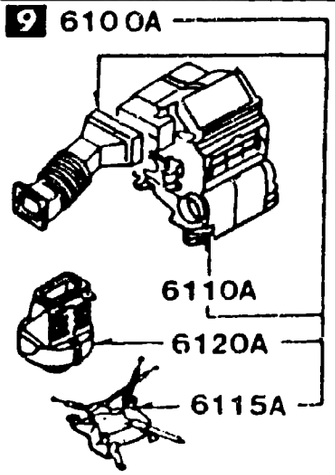

HEATER

13 6840A

TRIM & SCUFF PLATE

12 6800A,6820A

CEILING TRIM

11 6180A

REAR COOLER

10 6130A

AIR CONDITIONER

(ENGINE GROUP)

1580A

6140A

6150A

MODEL IDENTIFICATION

1984 MODEL MANUFACTURED FROM SEPT. 1983 (FB33* 800001-)

1985 MODEL MANUFACTURED FROM JULY 1984 (FB33* 850001-)

MDL NO.	STEER		ENGINE		S/W		BRAKE		ROOF		YEAR		VIN
	CALIFORNIA	FEDERAL	ROTARY 12A	ROTARY 13B	MANUAL SSPEED	AUTOMATIC	FRONT DISC	4WHEEL DISC	SUNROOF	NORMAL ROOF	1984	1985	
FB60	X		X		X		X			X	X	X	FB33* 800001-990000
FB61	X		X			X	X			X	X	X	FB33* 800001-990000
FB62	X		X		X		X		X		X	X	FB33* 800001-990000
FB63	X		X			X	X		X		X	X	FB33* 800001-990000
FB64	X		X		X			X	X		X	X	FB33* 800001-990000
FB65	X		X			X		X	X		X	X	FB33* 800001-990000
FB67	X			X	X			X	X		X	X	FB33* 800001-990000
FB78	X			X	X			X		X	X	X	FB33* 800001-990000
FB54		X	X		X		X			X	X	X	FB33* 800001-990000
FB55		X	X			X	X			X	X	X	FB33* 800001-990000
FB56		X	X		X		X		X		X	X	FB33* 800001-990000
FB57		X	X			X	X		X		X	X	FB33* 800001-990000
FB58		X	X		X			X	X		X	X	FB33* 800001-990000
FB59		X	X			X		X	X		X	X	FB33* 800001-990000
FB66		X		X	X			X	X		X	X	FB33* 800001-990000
FB77		X		X	X			X		X	X	X	FB33* 800001-990000
FB94		X			X			X		X	X	X	FB33* 850001-990000
FB95		X	X			X		X		X	X	X	FB33* 850001-990000

LIST OF MONTHLY STARTING VIN

1983

MODEL / YR./MO.	JAN. 83/1	FEB. 83/2	MAR. 83/3	APR. 83/4	MAY 83/5	JUN. 83/6	JUL. 83/7	AUG. 83/8	SEP. 83/9	OCT. 83/10	NOV. 83/11	DEC. 83/12
FB33*									800001	800882	806531	811185

1984

MODEL / YR./MO.	JAN. 84/1	FEB. 84/2	MAR. 84/3	APR. 84/4	MAY 84/5	JUN. 84/6	JUL. 84/7	AUG. 84/8	SEP. 84/9	OCT. 84/10	NOV. 84/11	DEC. 84/12
FB33*	815218	819685	824687	829422	834333	839137 (850001)	850015	854289	861829	866965	871511	876904

1985

MODEL / YR./MO.	JAN. 85/1	FEB. 85/2	MAR. 85/3	APR. 85/4	MAY 85/5	JUN. 85/6	JUL. 85/7	AUG. 85/8	SEP. 85/9	OCT. 85/10	NOV. 85/11	DEC. 85/12
FB33*	881177	885629	889476	893764	897625	905108	909988	912688	---	---	---	---

INSTRUCTIONS

HOW TO LOCATE PARTS IN THE CATALOG

Realistically, there can only be four possible scenarios when looking for a part(s). These are:

1. Either image of the part or the location on vehicle are known.
2. D-Code and/or Group number (of part) are known.
3. Part Number is known.
4. Name of part is known.

If one or more of the items listed above are known, the parts catalog user may use the appropriate index to facilitate part(s) location. The four indeces that may be used are:

PICTORIAL INDEX -
Use if either the image of the part and/or location on vehicle are known.

SECTION NUMBER INDEX -
Use if D-Code, Group Number or type of part is known.

PART NUMBER INDEX -
Use if part number is known.

ALPHABETICAL INDEX -
Use if name of part is known.

The following two pages outline how to use these indeces.

USING THE PICTORIAL INDEX

1. The PICTORIAL INDEX is the 1st column of every fiche.
2. Decide whether the desired part is an engine, chassis or body part.
3. Look through the PICTORIAL INDEX for the part. Take note of all possible fiche locations where the part may be found. These information will be useful in thoroughly tracking down the part.
4. Once the appropriate illustration is found, note the section number. Refer to the SECTION NUMBER INDEX for fiche location.

USING THE SECTION NUMBER INDEX

1. The SECTION NUMBER INDEX is the first row of every fiche.
2. The column labeled STARTING LOCATION denotes the microfiche GRID LOCATION for a particular section.

   EXAMPLE:

   1 - G6
   1 = denotes the fiche number, i.e., 1 of 3, 2 of 3, 3 of 3
   G = denotes the horizontal row location
   6 = denotes the vertical column location

3. As an additional feature, the sections located in every column are enclosed in a "highlight box" in the SECTION NUMBER INDEX.
4. At this point, it is just a simple matter of going to the correct frame and locating the desired part number.

USING THE PART NUMBER INDEX

1. If the part number is known, simply use the PART NUMBER INDEX.

2. The PART NUMBER INDEX is located at the very end of the catalog, on the last fiche of a fiche set.

3. The index shows the section number and the grid location where the part number may be found.

4. When the PART NUMBER INDEX is used, remember that the part number is NOT read from "left to right". The base part number is read first. The base part number consists of the center two digits plus the next three (or four) digits to the right.

5. Use the grid location to go to the appropriate frame where the part number may be found. Cross-reference the part number with the illustration and text to ensure that it is indeed the desired part.

USING THE ALPHABETICAL INDEX

1. If the name of the part is known, simply use the ALPHABETICAL INDEX.

2. The ALPHABETICAL INDEX is located right before the PART NUMBER INDEX, at the very end of the catalog, on the last fiche of a fiche set.

3. The ALPHABETICAL INDEX contains the section number and the grid location where the desired part may be found.

4. Use the grid location to go to the appropriate frame where the part number may be found. Cross-reference the part number with the illustration and text to ensure that it is indeed the desired part.

HOW TO INTERPRET THE ILLUSTRATION

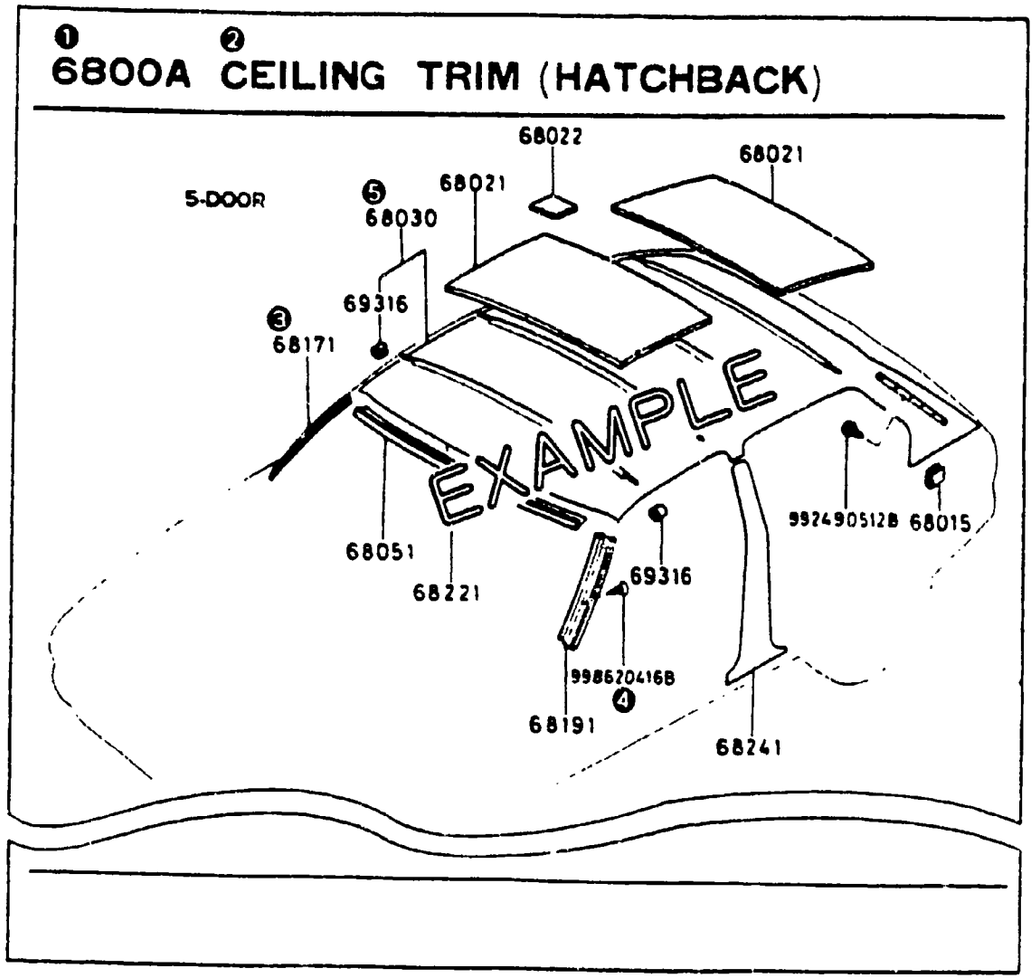

In the example shown above, the interpretation of each item appearing in the illustration area is as follows.

❶ **SECTION NUMBER**

Each illustration is given a Section Number, which is a "IDENTIFICATION NUMBER" of the group of parts classified in function.

Section Number basically consists of four numeric characters and alpha "A". But when a Section (a group of parts) is shown in more than one illustration over the same catalog, an additional alphabetical character is incorporated, e.g.,

Section No	Section Name
6800A	Ceiling Trim (Hatchback)
6800AA	Ceiling Trim (Wagon)

[Note]
Illustrations are always arranged in numerical sequence by SECTION NUMBER throughout the fiches in the set. (Exception: Section No. "0900A key Sets" is located in the first section of Body group.)

❷ **SECTION NAME**

This is a descriptive name of the illustration (the group of parts).

❸ **D-CODE (KEY NUMBER)**

D-Code consists of five or six digits, and serves as a "KEY NUMBER" to co-ordinate a part's illustration with its related text.

[Note]
Those parts which appear in the illustration without D-Code are not available as spare parts. (Exception: Most Standard Parts do not have D-Code, but are available as spare parts.)

❹ **STANDARD PART NUMBER**

Those parts which are standardized in form, dimension, material, etc. such as bolts, nuts, washers, etc. are called "Standard Parts". In most cases, Standard Part Numbers are shown on the illustration instead of via the D-Code, and are distinguised from D-Code by the number which consists of nine or ten digits starting with "9", e.g., 99862-0416B. Those Parts do not appear in the text and part number index.

❺ **ASSEMBLY AND COMPONENTS' RELATIONSHIP**

The relationship between an Assembly and its Components is indicated in the illustration but not in the text.

If the D-Code appeared as the example, the correct interpretation of that would be: D-Code 68030 includes D-Code 69316 and Top Ceiling (no D-Code indicated).

HOW TO INTERPRET THE TEXT

IMPORTANT
As there are many abbreviated words used in the text, refer to "Abbreviation List" located in the lower corner of each fiche (frame No. N1).

6800A-1 CEILING TRIM (HATCHBACK)

D-CODE (Key No.)	PART NAME	PART No.	Qty	MODEL/DESCRIPTION	VIN (Chassis No.)
❶ 68030	❷ CEILING, TOP	❹ 8531-68-030	❻ 1	(USE W/DEFROSTER) 3-DOOR ❽	
	❼ BLACK	❺ 00			
	BEIGE	31			
		85?"	1	(USE W/O DEFROSTER) 5-DOOR	
	BLACK	00			
	BEIGE	31			
68051	PLATE, T/CEILING	8531-68-051	1		FA4PS 500001 -522626 FA4TS.. 500001 -688439
	❾ <AN>	❿ •8531-68-051A	1		⓫ FA4PS. 522627- FA4TS.. 688440-

EXAMPLE

In the example shown above, the interpretation of the information appearing in each column is as follows.

❶ D-CODE (KEY NUMBER)
This is to serve as a "KEY NUMBER" to co-ordinate with a part on the illustration.
Those parts which are identical in function and descriptive name, are given a common code over the Mazda Spare Parts
Within each Section Number, the D-Code appears in numerical sequence.

❷ PART NAME
Part Names are shown in English and/or French and/or Spanish and/or German, depending upon Catalogs and are given to each "D-CODE".

❸ COLOR NAME
Color Names appear here when Color Codes are indicated in the "PART No." column. These are shown in English only.

❹ PART NUMBER
Under the same D-Code, if there are more than one Part Number, Part Numbers are always listed in numerical and/or alphabetical sequence regardless of the order of modification history of parts.

❺ COLOR CODE
When Color Code(s) appear(s), the indicated Part Number requires the Color Code to properly identify the color of the part, e.g., 8531-68-030 00, 8531-68-030 31.

❻ QUANTITY
This denotes the Quantity of each part number per the D-Code used on the applicable model(s).

❼ DESCRIPTION
An additional descriptive information for each part is provided as necessary.

❽ MODEL APPLICATION
Model Application for a part is shown in this column if necessary.
If there is no Model Application indicated, the affected part is applicable to "ALL MODELS" covered in the page.
For further information, refer to "HOW TO INTERPRET THE MODEL APPLICATION" shown later (frame No. G16).

❾ INTERCHANGEABILITY CODE
The code in < > brackets appearing in this column indicates the level of interchangeability between the indicated part and the former one.
For the definition of the Codes, refer to "INTERCHANGEABILITY CODE LIST" shown in the lower corner of each fiche (frame No. N1).

❿ NEW PART NUMBER'S SIGN
An asterisk (•) appearing in the "Part Number" column indicates that the affected Part Number has been newly added since the last edition.

⓫ VIN (CHASSIS No.)
VIN (Vehicle Identification Number) is shown in this column if necessary to identify the vehicles applicable to the affected part.
For further details, refer to "HOW TO INTERPRET THE VIN (CHASSIS No.)" located in frame No. H16 of this fiche.

HOW TO INTERPRET THE VIN (CHASSIS No.)

VEHICLE IDENTIFICATION SYSTEM FOR MAZDA RX-7 SERIES (1981–)

Vehicle Identification Number (VIN) for RX-7 (1981 and later year models) consists of World Manufacturer Identifier, Vehicle Description Section (VDS), Check Digit, Model Year Code and Production Serial Number which is sequentially numbered within each VDS.

Shown below as an example is the VIN for Mazda RX-7 (1981 model).

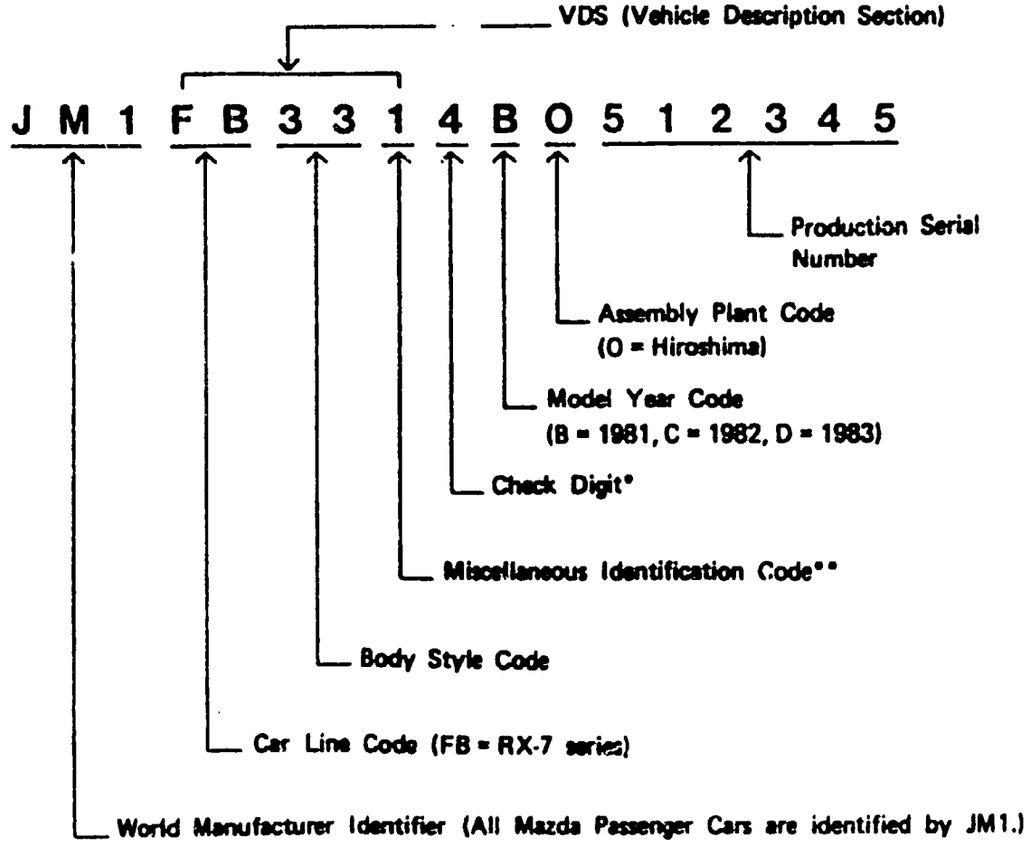

* Check Digit is included as a VIN security feature to permit law enforcement verification of the authenticity of a suspected illegal VIN plate. This single digit number is determined, based upon a complex mathematical formula which is applied to each vehicle's VIN number.

** Miscellaneous Identification Code identifies major components such as engine, brake system, cab type, etc. However, if all models of the same car line use the same such components, this code is indicated as a numeric character "1" only.

VIN PRESENTATION ON THE PARTS CATALOG

VIN does NOT ALWAYS APPEAR. No "VIN" indicated denotes that a Part is applicable to the affected model from the FIRST PRODUCTION and ON (up to now).

If the information in the "VIN" column appeared as the example below:

6230A-1 BACK DOOR MECHANISMS (HATCHBACK)

D-CODE (Key No.)	PART NAME	PART No.	Qty	MODEL/DESCRIPTION	VIN (Chassis No.)
62210A	HINGE, BACK DOOR	8531-62-210B	2	1000 1300	❶ FA4PS.. 500001 –522626 FA4TS.. 500001 –688439
		*8531-62-210D	2		❷ FA4PS.. 522627– FA4TS.. 688440– FA4US.. 500001–
62310	LOCK, BACK DOOR	8531-62-310B	2		❸

.. the correct interpretation of the above would be:

❶ Part No. 8531-62-210B is applicable to Model 1000 from VIN FA4PS-500001 thru FA4PS-522626 and Model 1300 from VIN FA4TS-500001 thru FA4TS-688439 for the Hatchback respectively.

❷ Part No. 8531-62-210D is applicable to Model 1000 from VIN FA4PS-522627 and on, Model 1300 from VIN FA4TS-688440 and on, and Model 1400 from VIN FA4US-500001 (the first production) and on for the Hatchback respectively.

❸ Part No. 8531-62-310B is applicable to ALL MODELS (1000, 1300 and 1400) of the Hatchback series from the FIRST PRODUCTION and ON (up to now).

HOW TO INTERPRET THE MODEL APPLICATION

Model Application does NOT ALWAYS APPEAR. No "Model Application" indicated denotes that a Part is applicable to ALL MODELS covered by the affected page.

If the information in the "MODEL/DESCRIPTION" column appeared as the example below:

4000A-1 EX. SYSTEM (HATCHBACK)

D-CODE (Key No.)	PART NAME	PART No.	Qty.	MODEL/DESCRIPTION	VIN (Chassis No.)
40961	HANGER SILENCER	3874-40-060	1	❶	
40081	BRACKET	3952-40-080A	1	CAL. ❷	
		8021-40-080C	1	FED. ❸	

. . . the correct interpretation of the above would be:

❶ Part No. 3874-40-060 is applicable to All of Hatchbacks.

❷ Part No. 3952-40-080A is applicable to the Hatchbacks for California applications.

❸ Part No. 8021-40-080C is applicable to All Hatchbacks for Federal applications.

CAL. = California

FED. = Federal

MAZDA PART NUMBERING SYSTEM

Mazda Part Numbers are generally classified into three categories: General Parts, Standard Parts and Special Tools.

MAZDA GENERAL PARTS

The Part Number basically consists of nine or ten digits. The 10th digit (if applicable) denotes modification of the part. It has twelve digits when a color code consisting of two digits is required.

EXAMPLE

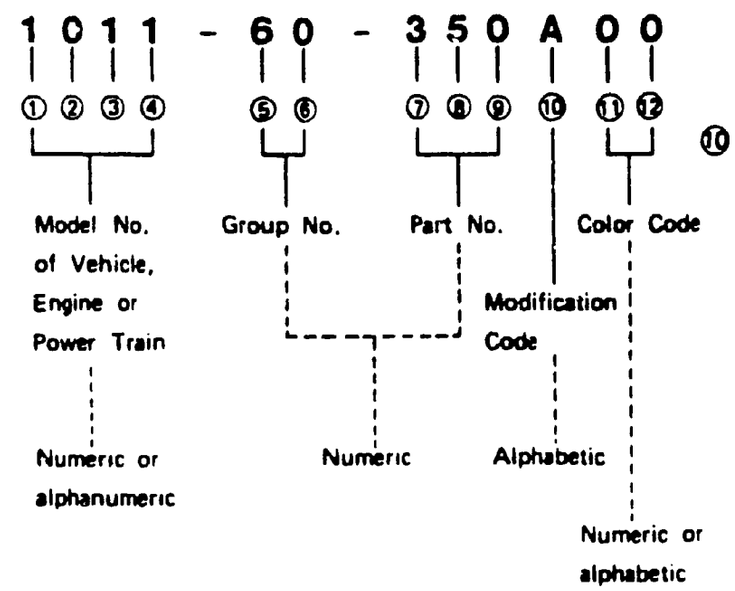

(Note)
If a color code was required but not modification code, the 10th digit would be blank and the color code would follow, e.g.,

1011-60 350 _ 00
↑
└blank

MAZDA STANDARD PARTS

Those Parts which are standardized in form and dimension such as Bolts, Nuts, Washers, Hoses, Disc Wheels, etc. are called Mazda Standard Parts.

All the Mazda Standard Parts are identified by a Part Number starting with "9". The numbering structure of Standard Parts varies depending upon the kind of parts.

The following is just one example of Standard Part Numbers.
For further details and examples, refer to the wall chart, "LIST OF STANDARD PARTS".

EXAMPLE

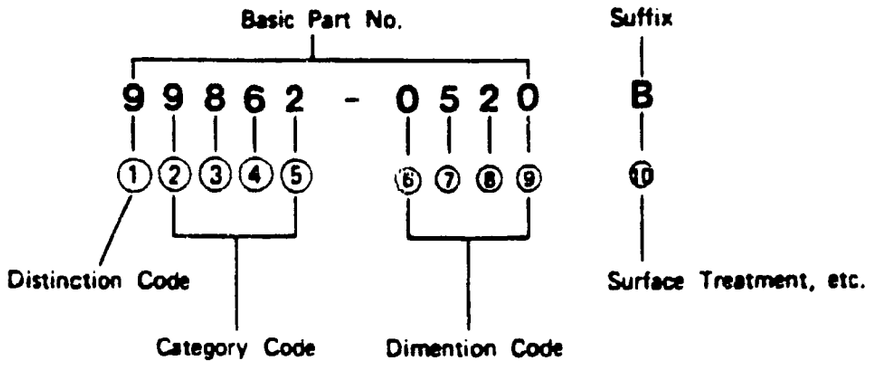

MAZDA SPECIAL TOOLS

In order to repair Mazda Vehicles, certain equipment is required. Those are called Mazda Special Tools.

EXAMPLE

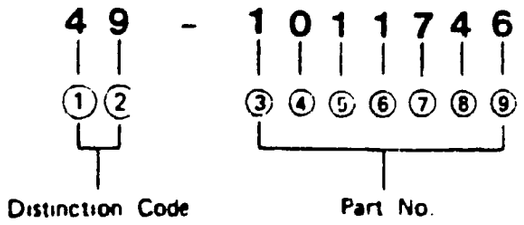

(Note)
As Mazda Special Tools are not shown in the Parts Catalog, refer to "LIST OF SPECIAL TOOLS & APPLYING MODELS" as for further details

INTERCHANGEABILITY CODE LIST

Code	Definition	
AN	⟷ (Both Ways)	A new part and the former part are fully interchangeable.
A	→ (One Way)	A new part can be used in place of the former part, but the former part cannot be used in place of a new part.
C	Plus	A new part with some additional part(s) can be used in place of the former part.
G	Plus	Some modification work is required to use a new part in place of the former part.
S	← (One Way Backward)	The former part can be used in place of a new part, but a new part cannot be used in place of the former part.

ABBREV.	MAY REPLACE
1ST	First
2ND	Second
3RD	Third
4TH	Fourth
4 SPD	Four Speed
4WS	Four Wheel Steering
4WD, 4X4	Four Wheel Drive
5TH	Fifth
5 SPD	Five Speed
A.A.	Anti Afterburn
A.A.S.	Auto Adjusting Suspension
ABS	Anti Lock Braking System
A/C	Air Conditioning
A.C.C.	Automatic Cruise Control
ACCEL.	Accelerator
A.C.V.	Air Control Valve
A.E.	Acoustical Equalizer
ALUM	Aluminum
ALL	Automatic Load Leveling
ALT.	Alternator
AMP.	Amplifier
ANT.	Antenna
APR.	April
ASSY.	Assembly
A/T	Automatic Transmission
AUG.	August
AUTO.	Automatic
BAL.	Balance
BELT.	Beltline
BFGR	B. F. Goodrich
BRDG	Bridgestone
BRG.	Bearing
BRKT.	Bracket
BRN.	Brown
BLK.	Black
BLU.	Blue
BMPR.	Bumper
B.S.V.	Bleed Solenoid Valve
BULL.	Bulletin
BW	Black Wall

ABRREV.	MAY REPLACE
CAL.	California
CASS.	Cassette
CAT.	Catagory
Cd	Coefficient Of Drag
CD	Compact Disk
C.G.R.	Constant Gear Ratio
CHG.	Change
CHK.	Check
CHMBR	Chamber
CHN.	Chain
CIGAR.	Cigarette
Cl	Coefficient Of Lift
CLPR	Caliper
CNVTR.	Converter
COMB.	Combination
COND.	Condenser
COMP.	Compressor
CONV.	Convertible
C/P	Cab Plus
C.S.D.	Cold Start Device
CSTG.	Coasting
CTR.	Center
CTRL.	Control
CV	Constant Velocity
CVR.	Cover
CYL.	Cylinder
DASH.	Dashboard
Db	Decibels
DEC.	December
DEF.	Defroster
DIAPH	Diaphragm
DIFF.	Differential
DNLP	Dunlop
DOHC	Double Overhead Camshaft
DSL.	Diesel
DTSS	Dynamic Tracking Suspension System
DX	Deluxe
ECAT	Electronically Controlled A/T
EGI	Electronic Gas Injection
EGR	Exhaust Gas Recirculation

ABBREVIATION LIST

ABBREV.	MAY REPLACE
ELEC.	Electric
ENG.	Engine
ETR	Electronically Tuned Radio
EXC.	Except
EXH.	Exhaust
EXT.	Extension
EQ	Equalizer
FEB.	February
FED.	Federal
F.I.	Fuel Injection
FLEX	Flexible
F/LID	Fuel Lid
FRT.	Front
FRST	Firestone
FSTNR.	Fastener
G	Gram
GAS.	Gasoline
GDYR	Goodyear
GEN.	General
GOV.	Governor
GRN.	Green
GRY.	Gray
GSKT.	Gasket
H.A.C.	High Altitude Compensator
HARN.	Harness
H/B	Hatchback
HD.	Head
H/DUTY	Heavy Duty
HDWE.	Hardware
HI ALT.	High Altitude
HSG.	House, Housing
HTR.	Heater
IC	Integrated Circuit
ID	Inside Diameter
IGN.	Ignition
ILLUM.	Illumination, Illuminated
INCL	Includes
IND	Indicator
INFO.	Information
INST.	Instrument

ABBREV.	MAY REPLACE
INN.	Inner
INT.	Interior
INTMT.	Intermittent
INJ.	Injector, Injected
I.R.S.	Independent Rear Suspension
JAN.	January
JUL.	July
JUN.	June
KG	Kilogram
KM	Kilometer
KW	Kilowatt
(L), LT	Left
L=	Length
LCD	Liquid Crystal Display
L/B	Long Bed
LH	Left Hand
LPG	Liquid Petroleum Gas
L.S.D.	Limited Slip Differential
LWR	Lower
LX	Luxury
M	Metallic
MAR.	March
MAY	Mica
MCHN	Michelin
MLDG.	Moulding, Mould
MM	Millimeter
MNFLD.	Manifold
MPX	Multiplex
MSTR.	Master
M/T	Manual Transmission
MTG.	Mounting
MTR	Manually Tuned Radio
N=	Number Of Teeth
N/A	Not Available
N/B	Notchback
NO.	Number
NORM.	Normal
NOV.	November

ABBREVIATION LIST

ABBREV.	MAY REPLACE
OCT.	October
OD	Outer Diameter
O/DRIVE	Overdrive
OHC	Overhead Camshaft
OPT.	Optional
O.S.	Oversize
OUT.	Outer
PANSC	Panasonic
PARK.	Parking
PB	Parking Brake
PCV	Positive Crankcase Ventilation
PIN.	Pinion
PKG	Package
PLR	Pillar
PROD.	Production
P/S	Power Steering
P/TRIM	Pillar Trim
PTH	Phillips Truss Head
PWR.	Power
QTR.	Quarter
QTY.	Quantity
RH, RT	Right
RH	Right Hand
RAD.	Radiator
REINF.	Reinforcement
REG.	Regular
REGUL.	Regulator
REL.	Release
REM.	Remote
RET.	Return
REV.	Reverse
RR.	Rear
RWL	Raised White Letters
S/B	Short Bed
S/ROD	Shift Rod
S/S	Supercession
SDN.	Sedan
SEP.	September
SERV.	Service
SLND.	Solenoid
SOHC	Single Overhead
SPEC.	Specification
SPEEDO.	Speedometer
SPG.	Spring
SPKR.	Speaker
SPRKT.	Sprocket
SRS	Supplemental Restraint System
STAB.	Stabilizer
STD.	Standard
STRG.	Steering
S/ROOF	Sunroof
SUSP.	Suspension
S/W	Station Wagon
SW.	Switch
SYNC.	Synchronizer
T=	Thickness
TEMP.	Temperature
THERMO.	Thermostat
TMG.	Timing
T/MISSION	Transmission
TRK.	Truck
T/LID	Trunk Lid
T/S	Touring Sedan
TTL	Twin Trapezoidal Links
TURBO	Turbocharged
UP.	Upper
U.S.	Undersize
VAC.	Vacuum
V.G.R	Variable Gear Ratio
VPV	Variable Port Valve
VNL.	Vinyl
W=	Width
W/	With
W/P	Water Pump
WGN.	Wagon
WHL.	Wheel
W/O	Without
WHT.	White
W/SHIELD	Wind Shield, Screen Wind Screen
WTR.	Water
W/W	White Walls

AERO

0000-86-2200 - 1979-85, Lip Spoiler

AIR CONDITIONER
Refer to Accy. Bulletin XA-1 for Air Conditioner information.

ARM REST
Refer to Accy. Bulletin XN-1 for replacement parts.

BATTERY

0000-80-124F
Refer to Accy. Bulletin XG-4 for Battery information.

BLOCK HEATER

0000-88-6600
Refer to Accy. Bulletin XG-5 for installation information.

CIGARETTE LIGHTERS

B001-66-252 - 1983-90

CRUISE CONTROL

FA54-99-063A
Refer to Accy. Bulletin XG-7 for more Cruise Control information.

DOOR EDGE GUARDS

0000-88-3199-BK - ALL, Black Universal Type

FRONT MASK

0000-88-0584 - 1984-85, W/O Air Dam

PAINT

Refer to Accy. Bulletin XE-2 for Touch-Up Paint information.

STEREO EQUIPMENT
Refer to Accy. Bulletins XS-1, XS-2, and XS-3 for Audio information.

SUNROOF

0000-86-2600 - 1980-85, Moonroof
0000-86-2600-KT - 1980-85, Left & Right Hinge
0000-86-2600-CP - 1980-85, Cap Nut Set
8346-62-885 - 1980-85, Slide Hook Latch

TIRES
Refer to Accy. Bulletins XE-1 for Tire information.

SECTION INDEX -- ENGINE

STARTING LOCATION	SECT NO.	SECTION NAME
1 - C 3	1000A	SHORT ENGINE & GASKET SETS
1 - D 3	1030A	ROTOR HOUSING
1 - E 3	1040A	OIL PAN, FRONT & REAR HOUSING
1 - G 3	1100A	ECCENTRIC SHAFT & FLYWHEEL
1 - H 3	1110A	ROTOR & RELATED
1 - I 3	1300A	INTAKE MANIFOLD (12A) (S,GS,GSL)
1 - J 3	1300AA	INTAKE MANIFOLD (13B) (GSL-SE)
1 - K 3	1310A	EXHAUST MANIFOLD (12A) (S,GS,GSL)
1 - L 3	1310AA	EXHAUST MANIFOLD (13B) (GSL-SE)
1 - M 3	1320A	FUEL SYSTEM (12A) (S GS,GSL)
1 - C 4	1320AA	FUEL SYSTEM (13B) (GSL-SE)
1 - E 4	1330A	AIR CLEANER (12A) (S,GS,GSL)
1 - F 4	1330AA	AIR CLEANER (13B) (GSL-SE)
1 - G 4	1350A	STARTING ASSIST SYSTEM (12A) (S,GS,GSL) (FEDERAL ONLY)
1 - H 4	1350AA	STARTING ASSIST SYSTEM (13B) (GSL-SE) (FEDERAL ONLY)
1 - I 4	1359A	CARBURETOR & REPAIR KIT (12A) (S,GS,GSL)
1 - J 4	1360A	CARBURETOR COMPONENTS (12A) (S,GS,GSL)
1 - L 4	1371A	AIR PUMP & AIR CONTROL VALVE (12A) (S,GS,GSL)
1 - M 4	1371AA	AIR PUMP & AIR CONTROL VALVE (13B) (GSL-SE)
1 - N 4	1380A	EMISSION CONTROLS (12A) (S GS GSL)
1 - C 5	1380AA	EXHAUST SIDE EMISSION CONTROLS (13B) (GSL-SE)
1 - E 5	1400A	OIL PUMP & FILTER (12A, (S GS,GSL)
1 - F 5	1400AA	OIL PUMP & FILTER (13B) (GSL-SE)
1 - H 5	1500A	COOLING SYSTEM (12A) S GS GSL)
1 - I 5	1500AA	COOLING SYSTEM (13B) (GSL-SE)
1 - K 5	1580A	COMPRESSOR BRACKET PULLEY & BELT
1 - L 5	160CA	CLUTCH DISC & COVER
1 - M 5	1700A	TRANSMISSION CASE (MANUAL)
1 - C 6	1710A	TRANSMISSION GEARS (MANUAL)
1 - G 6	1720A	CHANGE CONTROLS (MANUAL)
1 - H 6	1800A	ENGINE ELECTRICAL SYSTEM
1 - I 6	1820A	DISTRIBUTOR
1 - J 6	1830A	ALTERNATOR
1 - K 6	1840A	STARTER
1 - M 6	1850A	BATTERY & CABLES
1 - N 6	1910A	TORQUE, CONVERTER, OIL PUMP & PIPING (AUTOMATIC)
1 - C 7	1920A	TRANSMISSION CASE & MAIN CONTROLS (AUTOMATIC)
1 - E 7	1930A	CLUTCH & PLANETARY GEAR (AUTOMATIC)
1 - G 7	1940A	LOW, REVERSE & GOVERNOR (AUTOMATIC)
1 - H 7	1950A	MANUAL LINKAGE (AUTOMATIC
1 - I 7	1960A	GASKET & SEAL KIT (AUTOMATIC)

STARTING LOCATION	SECT NO.	SECTION NAME

1000A-1 SHORT ENGINE & GASKET SETS

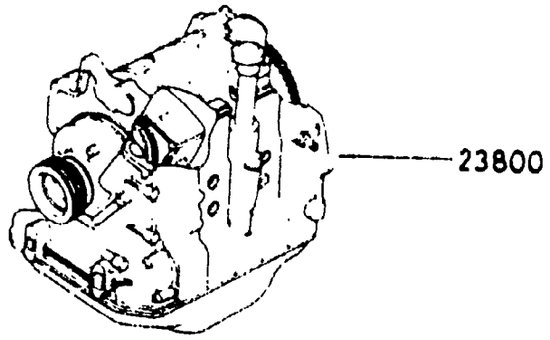

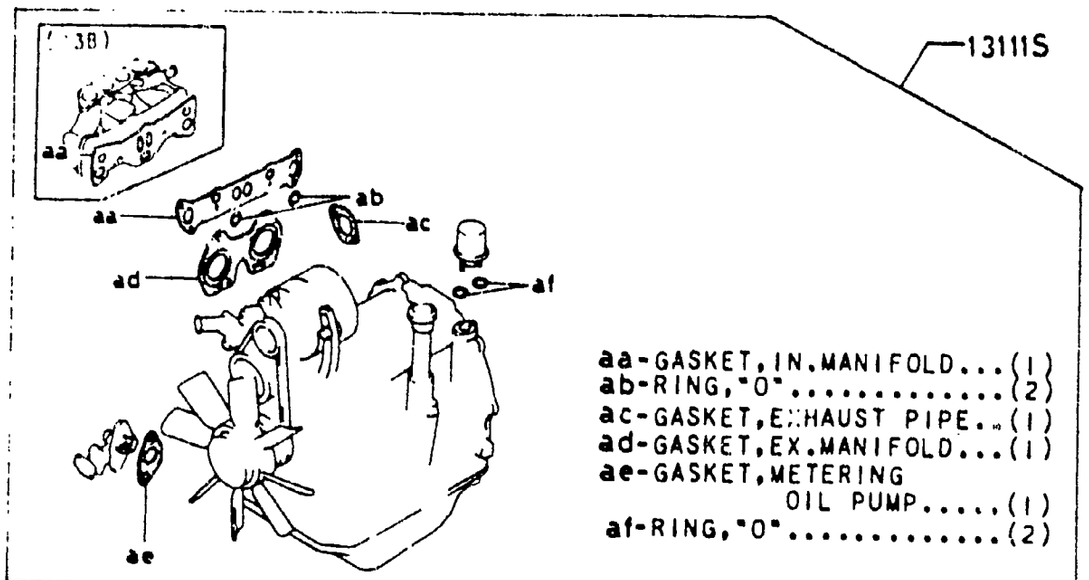

aa-GASKET,IN.MANIFOLD...(1)
ab-RING,"O".....(2)
ac-GASKET,EXHAUST PIPE..(1)
ad-GASKET,EX.MANIFOLD...(1)
ae-GASKET,METERING OIL PUMP.....(1)
af-RING,"O".....(2)

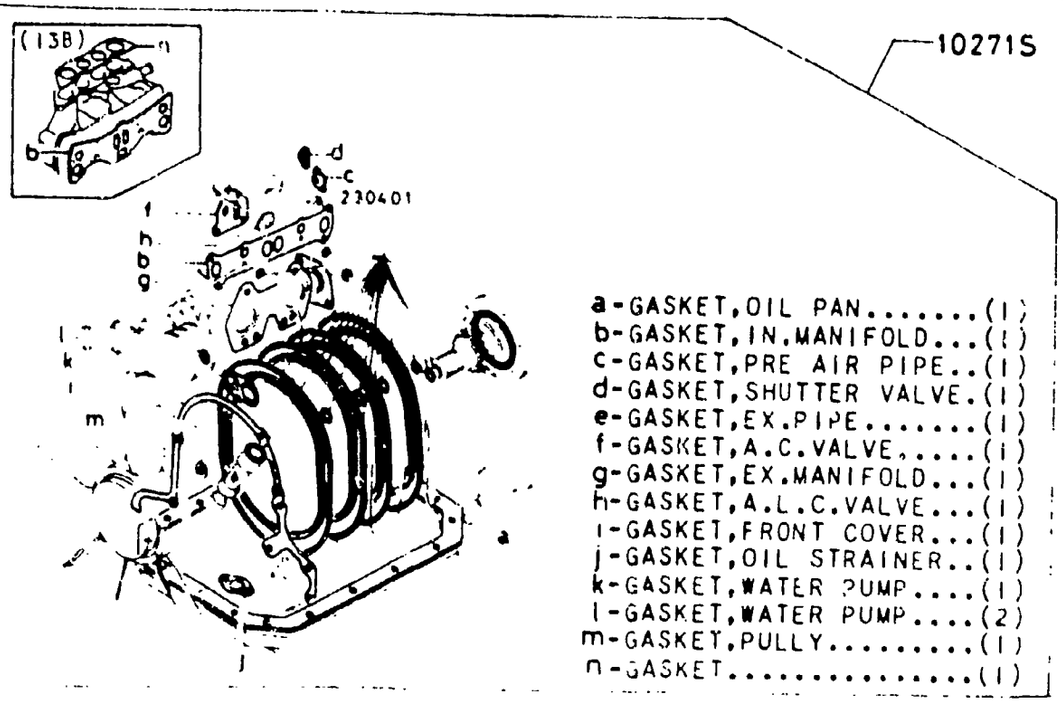

a-GASKET,OIL PAN.....(1)
b-GASKET,IN.MANIFOLD...(1)
c-GASKET,PRE AIR PIPE..(1)
d-GASKET,SHUTTER VALVE.(1)
e-GASKET,EX.PIPE.....(1)
f-GASKET,A.C.VALVE.....(1)
g-GASKET,EX.MANIFOLD...(1)
h-GASKET,A.L.C.VALVE...(1)
i-GASKET,FRONT COVER...(1)
j-GASKET,OIL STRAINER..(1)
k-GASKET,WATER PUMP....(1)
l-GASKET,WATER PUMP....(2)
m-GASKET,PULLY.....(1)
n-GASKET.....(1)

ITEM NO.	D-CODE	DESCRIPTION	PART NO.	QTY	MODEL/DESCRIPTION	REMARKS
	10 271S	GASKET SET, ENGINE	N231-99-100	1	12A (S,GS,GSL)	
			N304-99-100A	1	13B (GSL-SE)	
	13 111S	GASKET SET, SUB-ENGINE	N201-99-050	1	12A (S,GS,GSL)	
			N304-99-050	1	13B (GSL-SE)	
	23 0401	O-RING SET	1757-23-040B	1	12A (S,GS,GSL)	
			N307-23-040	1	13B (GSL-SE)	
	23 800	ENGINE, SHORT				
		REFER TO PARTS BULL. NOS. K-6 & P-8 FOR MORE INFO.				

1030A-1 ROTOR HOUSING

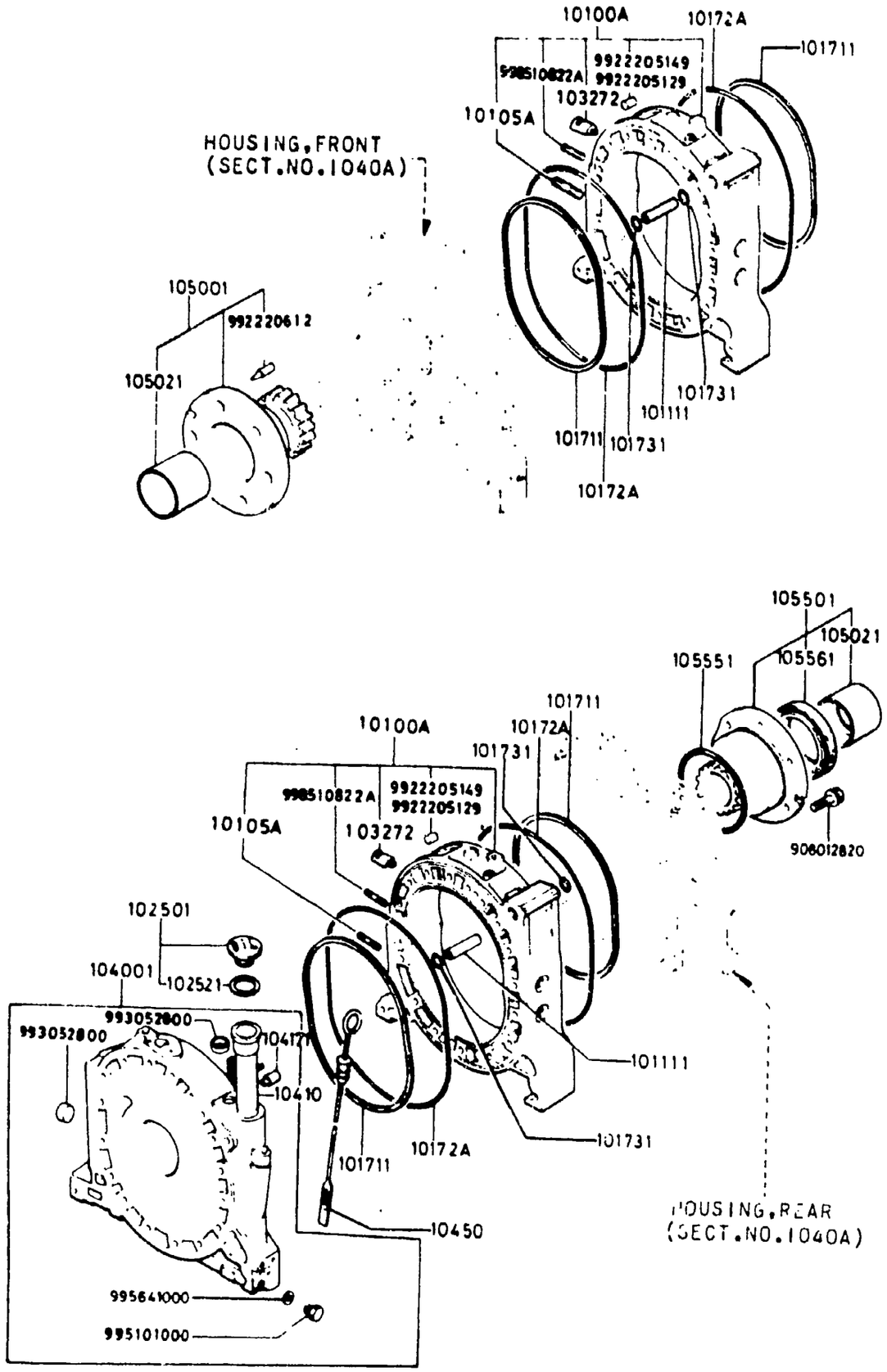

ITEM NO	D-CODE	DESCRIPTION	PART NO	QTY	MODEL/DESCRIPTION	REMARKS
	10 100A	HOUSING, ROTOR	N249-10-100	2	12A (S,GS,GSL)	
			N304-10-100C	2	13B (GSL-SE)	
	10 105A	STUD, REACTOR	0839-10-105	4		
	10 1111	DOWEL, TUBULAR	0839-10-1116	4	12A (S,GS,GSL)	
			1757-10-111	4	13B (GSL-SE)	
	10 1711	RING, SQUARE	1757-10-171A	4		
	10 172A	RING, SQUARE-OUTER	1480-10-172	4		
	10 1731	O-RING	N231-10-173	4		
	10 2501	CAP OIL FILLER	8871-10-250A	1		
	10 2521	GASKET, OIL CAP	8871-10-252	1		
	10 3272	PLUG, JET	N236-14-633A	2	13B (GSL-SE)	
	10 4001	HOUSING, INTERMEDIATE	8341-10-400	1	12A (S, GS, GSL)	
			N304-10-400	1	13B (GSL-SE)	
	10 410	PIPE, OIL FILLER	3565-10-410A	1		
	10 4171	JOINT, PIPE	8562-10-417	1		
	10 450	DIPSTICK	N201-10-830	1		
	10 5001	GEAR, STATIONARY-FRT.	3743-10-500	1	12A (S,GS,GSL)	
			3648-10-500	1	13B (GSL-SE)	
	10 5021	BEARING, MAIN	0820-10-502B	2		
	10 5501	GEAR, STATIONARY-RR.	3743-10-550A	1	12A (S, GS, GSL)	
			3648-10-550A	1	13B (GSL-SE)	
	10 5551	O-RING	0813-10-555A	1		
	10 5561	SEAL, OIL	1668-10-556A	1		

1040A-1 OIL PAN, FRONT & REAR HOUSING

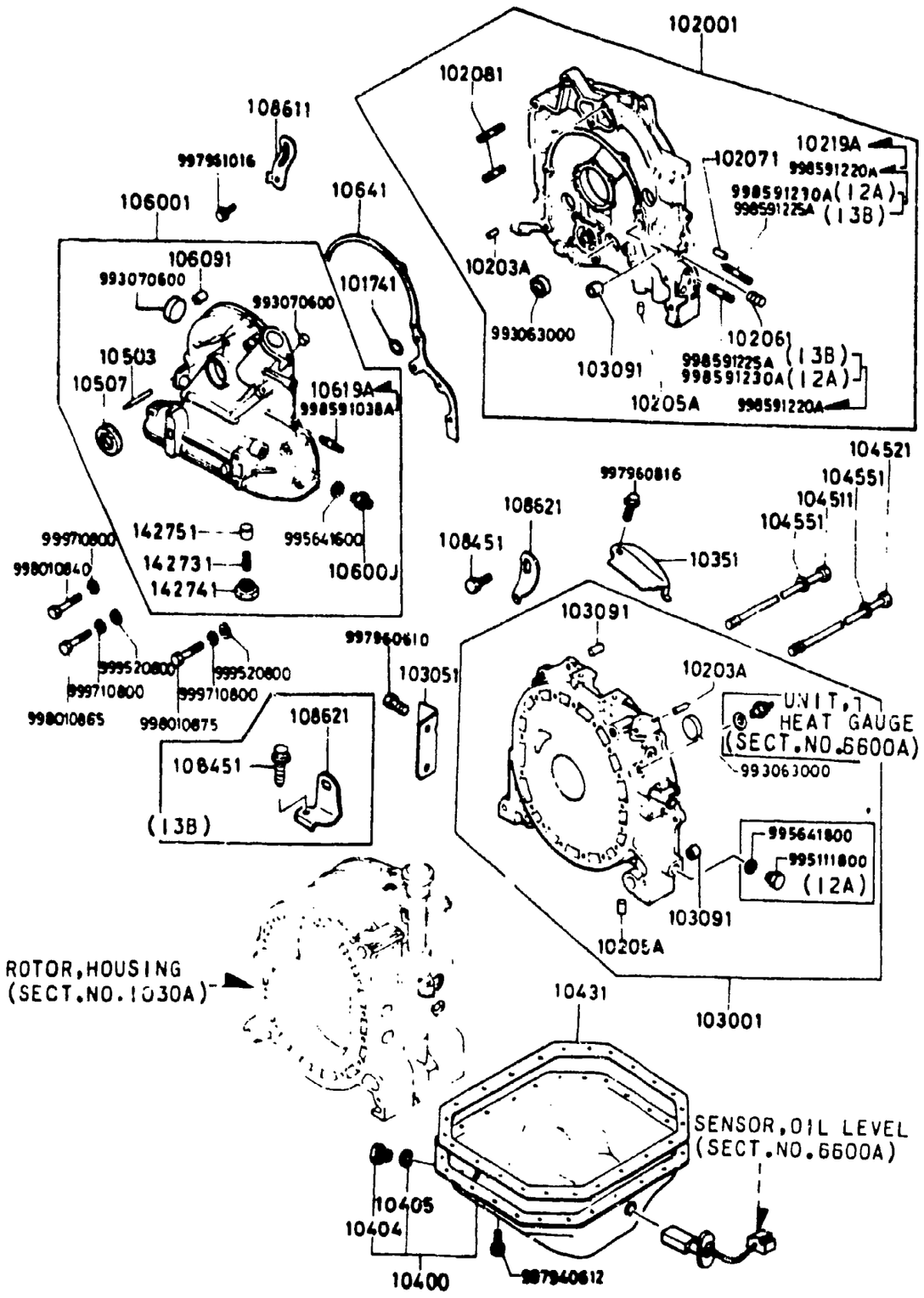

ITEM NO.	D-CODE	DESCRIPTION	PART NO.	QTY	MODEL/DESCRIPTION	REMARKS
	10 1741	O-RING	N231-10-174	1		
	10 2001	HOUSING, FRONT	8981-10-200B	1	12A (S,GS,GSL)	
			N304-10-200B	1	13B (GSL-SE)	
	10 203A	PIN, DOWEL	0839-10-203	2		
	10 205A	PLUG, BLIND	8562-10-205	4		
	10 2061	PLUG, BLIND	1757-10-206A	1		
	10 2071	PLUG, BLIND	1757-10-207A	1		
	10 2081	STUD	1757-10-208	4		
	10 219A	STUD, HOUSING	N249-10-219	1	FROM JAN '84 PROD.	FB33* ..815218-
	10 3001	HOUSING, REAR	N231-10-300A	1	12A (S,GS,GSL)	
			N304-10-300	1	13B (GSL-SE)	
	10 3051	COVER, DUST	1481-10-305	1	12A A/T (S,GS,GSL) THRU OCT '83 PROD.	FB33* ..800001-806530
			1480-10-305	1	12A A/T (S,GS,GSL) FROM NOV '83 PROD.	FB33* ..806531-
			N225-10-305	1	13B (GSL-SE)	
	10 3091	PIN, TUBULAR	1757-10-309	4		
	10 351	COVER, DUST	N231-10-351A	1	12A M/T (S,GS,GSL)	
			N304-10-351	1	13B (GSL-SE)	
	10 400	PAN, OIL	N201-10-700A	1	CAL. 12A (S,GS,GSL)	
			N203-10-700	1	FED/12A (S,GS,GSL)	
			N304-10-700	1	FED/13B (GSL-SE)	
			N305-10-700A	1	CAL. 13B (GSL-SE)	
	10 404	PLUG, DRAIN	HE03-10-404	1		
	10 405	GASKET, DRAIN PLUG	9956-41-400	1		
	10 431	GASKET, OIL PAN	0839-10-711	1	12A (S,GS,GSL)	
			1757-10-711	1	13B (GSL-SE)	
	10 4511	BOLT, TENSION	1015-10-451B	16	12A (S,GS,GSL)	
			1757-10-451B	17	13B (GSL-SE)	
	10 4521	BOLT, TENSION	1015-10-452A	1	12A (S,GS,GSL)	
			1757-10-452A	1	13B (GSL-SE)	
	10 4551	WASHER, SEAL	0839-10-455	17	12A (S,GS,GSL)	
				18	13B (GSL-SE)	
	10 503	PIN, TOP INDICATOR	8871-10-631A	1		
	10 507	SEAL, OIL	0820-10-605	1		
	10 6001	COVER, FRONT	N231-10-600B	1	12A (S,GS,GSL)	
			N304-10-A60	1	13B (GSL-SE)	
	10 600J	JOINT, UNION	9938-41-200F	1		
	10 6091	PIN, SPRING	1757-10-609	1		
	10 619A	STUD, COVER	N249-10-619	2	FROM JAN '84 PROD.	FB33* ..815218-
	10 641	GASKET, FRONT COVER	8527-10-641	1		

1040A-2 OIL PAN, FRONT & REAR HOUSING

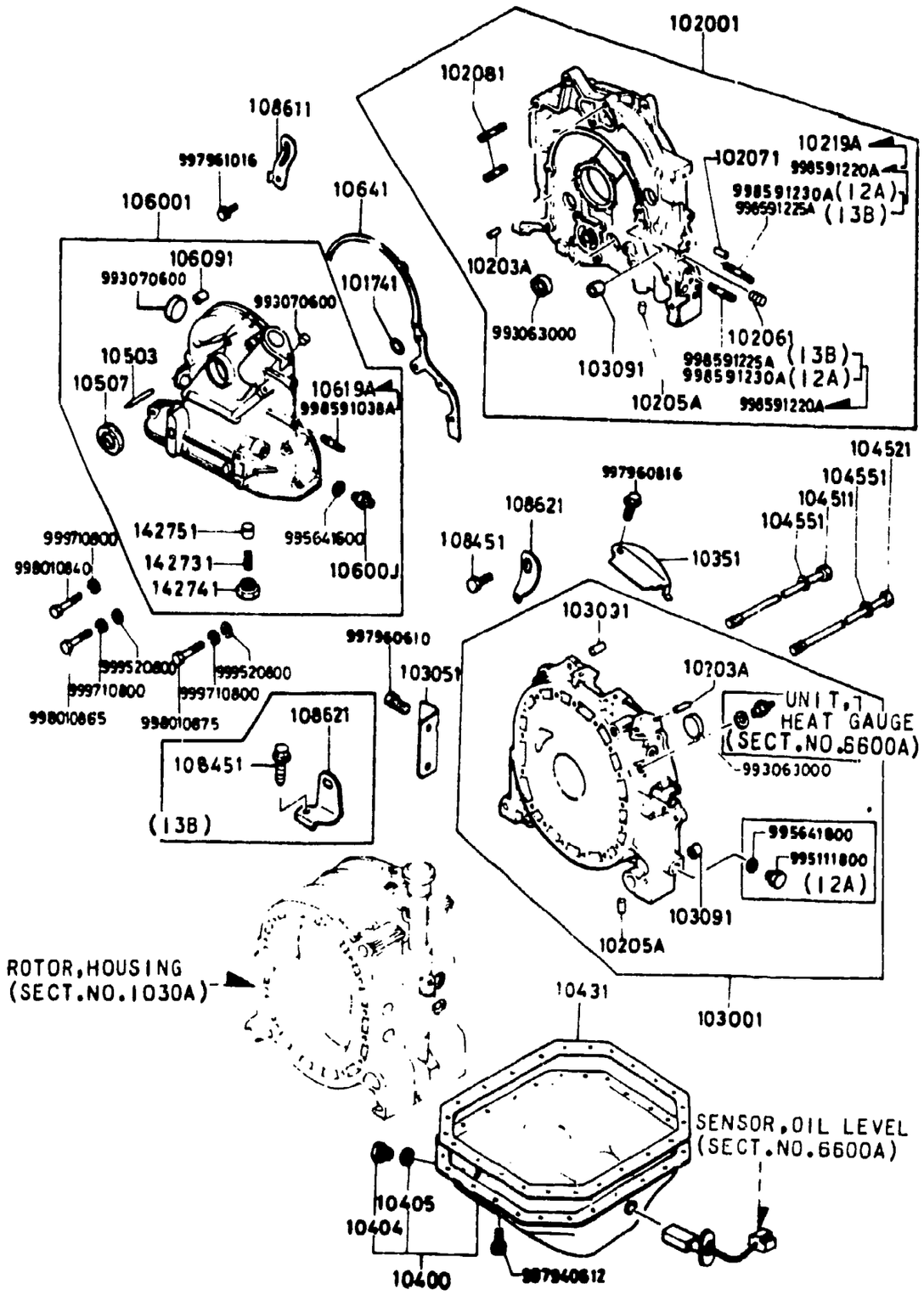

ITEM NO.	D-CODE	DESCRIPTION	PART NO.	QTY	MODEL/DESCRIPTION	REMARKS
	10 8451	BOLT	8555-10-845	1	12A (S,GS,GSL)	
			N307-10-845	1	13B (GSL-SE)	
	10 8611	HANGER, ENGINE	N225-10-861	1		
	10 8621	HANGER, ENGINE	8871-10-862	1	12A (S,GS,GSL)	
			N304-10-862	1	13B (GSL-SE)	
	14 2731	SPRING	N231-14-273	1	12A (S,GS,GSL)	
			0839-14-273A	1	13B (GSL-SE)	
	14 2741	PLUG	0839-14-274	1		
	14 2751	PLUNGER, CONTROL	0839-14-115	1		

1100A-1 ECCENTRIC SHAFT & FLYWHEEL

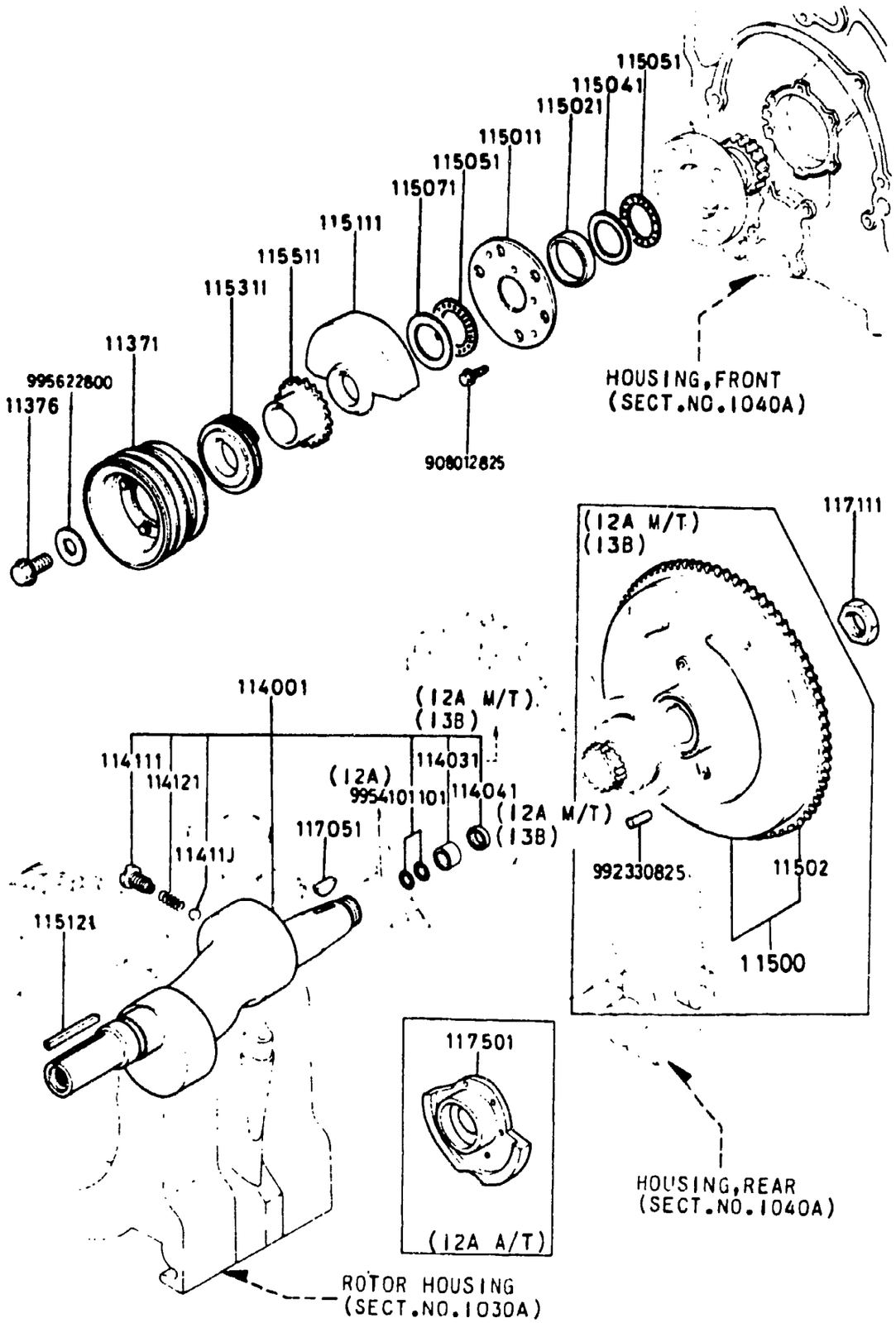

ITEM NO.	D-CODE	DESCRIPTION	PART NO.	QTY	MODEL/DESCRIPTION	REMARKS
	11 371	PULLEY, CRANKSHAFT	N249-11-600A	1	12A (S,GS,GSL)	
			N304-11-600A	1	13B (GSL-SE)	
		SEE SERVICE BULLETIN 008/84, CAT. 1 FOR MORE PULLEY INFO.				
	11 376	BOLT, PULLEY	0820-11-611B	1		
	11 4001	SHAFT, ECCENTRIC	N201-11-400	1	12A M/T (S,GS,GSL)	
			1883-11-400A	1	12A A/T (S,GS,GSL)	
			N304-11-400	1	13B (GSL-SE)	
	11 4031	BEARING, NEEDLE	N326-11-D03	1	12A M/T (S,GS,GSL)	
					13B (GSL-SE)	
	11 4041	SEAL, OIL	1881-11-404	1	12A M/T (S,GS,GSL)	
				1	13B (GSL-SE)	
	11 4111	PLUG, OIL JET	0839-11-411A	2		
	11 411J	BALL, STEEL	9961-12-000	2		
	11 4121	SPRING	0839-11-412	2		
	11 500	FLYWHEEL	N231-11-700A	1	12A M/T (S,GS,GSL)	
			N304-11-700A	1	13B (GSL-SE)	
		SEE SERVICE BULLETIN 003/84, CAT. 40 FOR MORE FLYWHEEL INFO.				
	11 5011	PLATE	1011-11-501	1		
	11 502	GEAR, RING	0866-11-702	1	12A M/T (S,GS,GSL)	
				1	13B (GSL-SE)	
	11 5021	SPACER	0839-11-509	1	(L=8.00)	
			0839-11-502	1	(L=8.02)	
			0839-11-508	1	(L=8.04)	
			8519-11-517	1	(L=8.06)	
			0839-11-506	1	(L=8.08)	
	11 5041	PLATE, THRUST	1011-11-504	1		
	11 5051	BEARING, NEEDLE	0813-11-505B	2		
	11 5071	WASHER, THRUST	1011-11-507	1		
	11 5111	WEIGHT, BALANCE	N226-11-511A	1	12A (S,GS,GSL)	
			N304-11-511	1	13B (GSL-SE)	
	11 5121	KEY	9923-60-571	1		
	11 5311	GEAR, DRIVE	0839-11-531	1		
	11 5511	GEAR, DRIVE-OIL PUMP	0839-11-551A	1		
	11 7051	KEY, FLYWHEEL	0820-11-705	1		
	11 7111	NUT, LOCK	0810-11-711	1		
	11 7501	WEIGHT, CONTROL	N226-11-751A	1	12A A/T (S,GS,GSL)	

1110A-1 ROTOR & RELATED

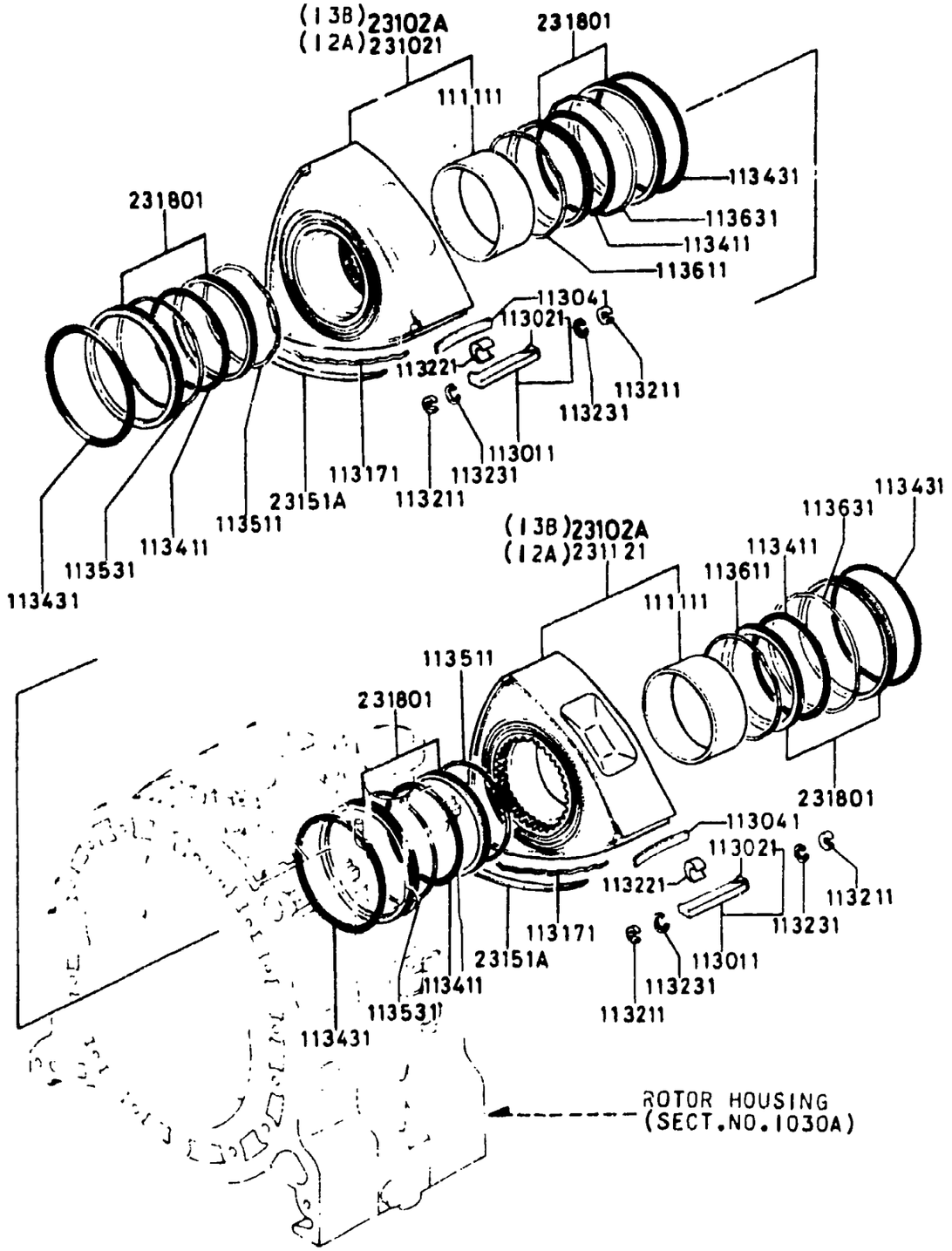

ITEM NO.	D-CODE	DESCRIPTION	PART NO.	QTY	MODEL DESCRIPTION	REMARKS
	11 1111	BEARING, ROTOR	1011-11-111	2		
	11 3011	SEAL, APEX	N201-11-300A	6	12A (S,GS,GSL)	
			N304-11-300	6	13B (GSL-SE)	
	11 3021	PIECE, SIDE	N201-11-302A	6		
	11 3041	SPRING, APEX SEAL	1011-11-304B	6	12A (S,GS,GSL)	
			1757-11-304	6	13B (GSL-SE)	
	11 3171	SPRING, SIDE SEAL	0820-11-317	12		
	11 3211	SEAL, CORNER	N225-11-321	12	(STD.)	
	11 3221	PLUG, CORNER SEAL	N201-11-322	12		
	11 3231	SPRING, CORNER SEAL	1202-11-323A	12		
	11 3411	O-RING, INNER	0820-11-341	4		
	11 3431	O-RING, OUTER	1202-11-343	4		
	11 3511	SPRING, FIT.-INNER	N225-11-351	2		
	11 3531	SPRING, FIT.-OUTER	1011-11-353A	2		
	11 3611	SPRING, REAR-INNER	N225-11-361	2		
	11 3631	SPRING, REAR-OUTER	1011-11-363A	2		
	23 1021	ROTOR, FRONT	N225-23-103	1	12A (S,GS, GSL)	
	23 102A	ROTOR	N304-23-103	2	13B (GSL-SE)	
	23 1121	ROTOR, REAR	N225-23-113	1	12A (S,GS,GSL)	
	23 151A	SEAL, SIDE	1011-23-151A	12		
	23 1801	SEAL SET, OIL	8871-23-180	4		

1300A-1 INTAKE MANIFOLD (12A) (S,GS,GSL)

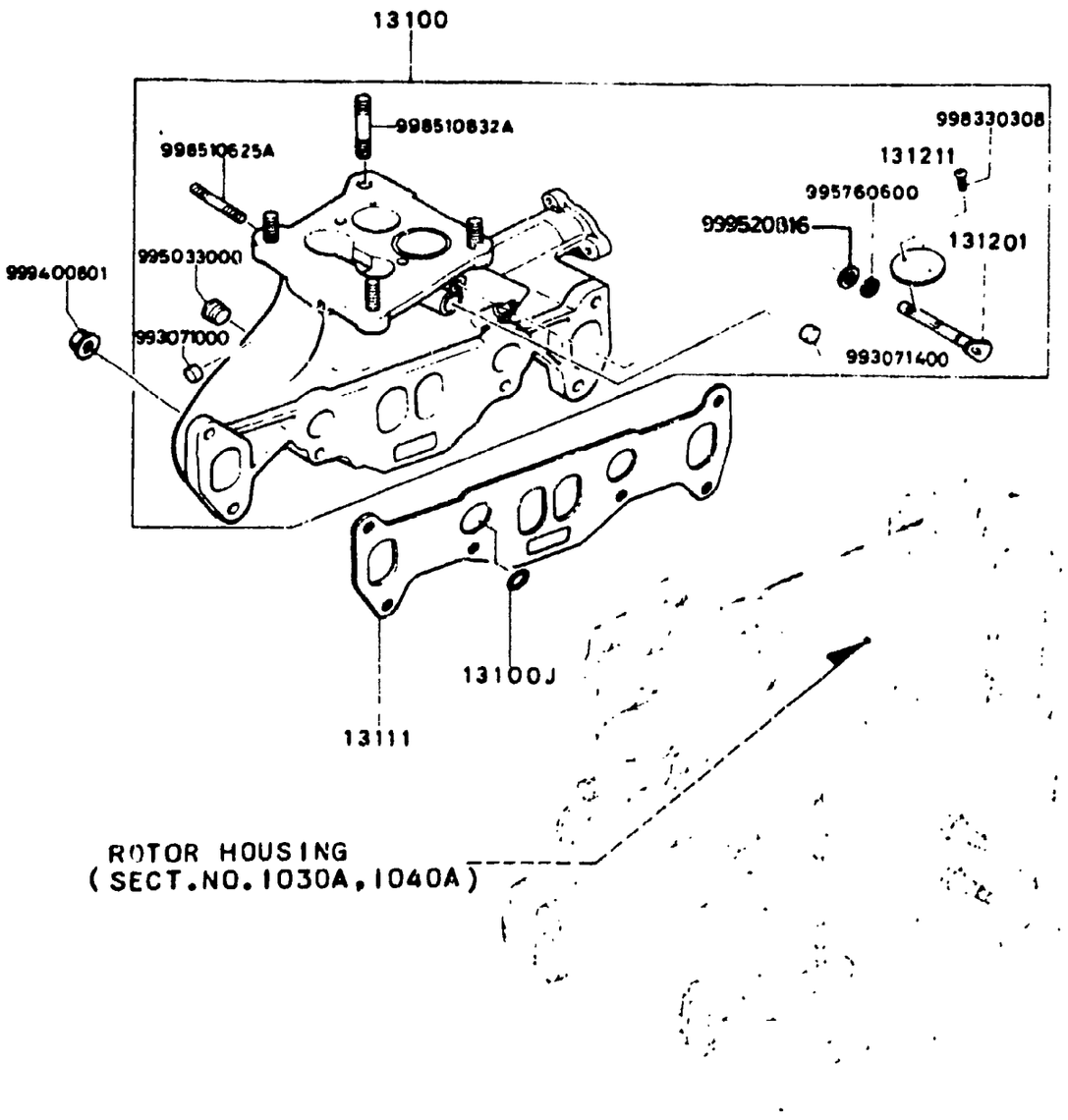

ITEM NO.	D-CODE	DESCRIPTION	PART NO.	QTY	MODEL/DESCRIPTION	REMARKS
	13 100	MANIFOLD, INTAKE	N201-13-100A	1		
	13 100J	O-RING	8527-13-113	2		
	13 111	GASKET, INTAKE MANIFOLD	1881-13-111A	1		
	13 1201	SHAFT, VALVE	1480-13-120A	1		
	13 1211	VALVE	N201-13-121	1		

1300AA-1 INTAKE MANIFOLD (13B) (GSL-SE)

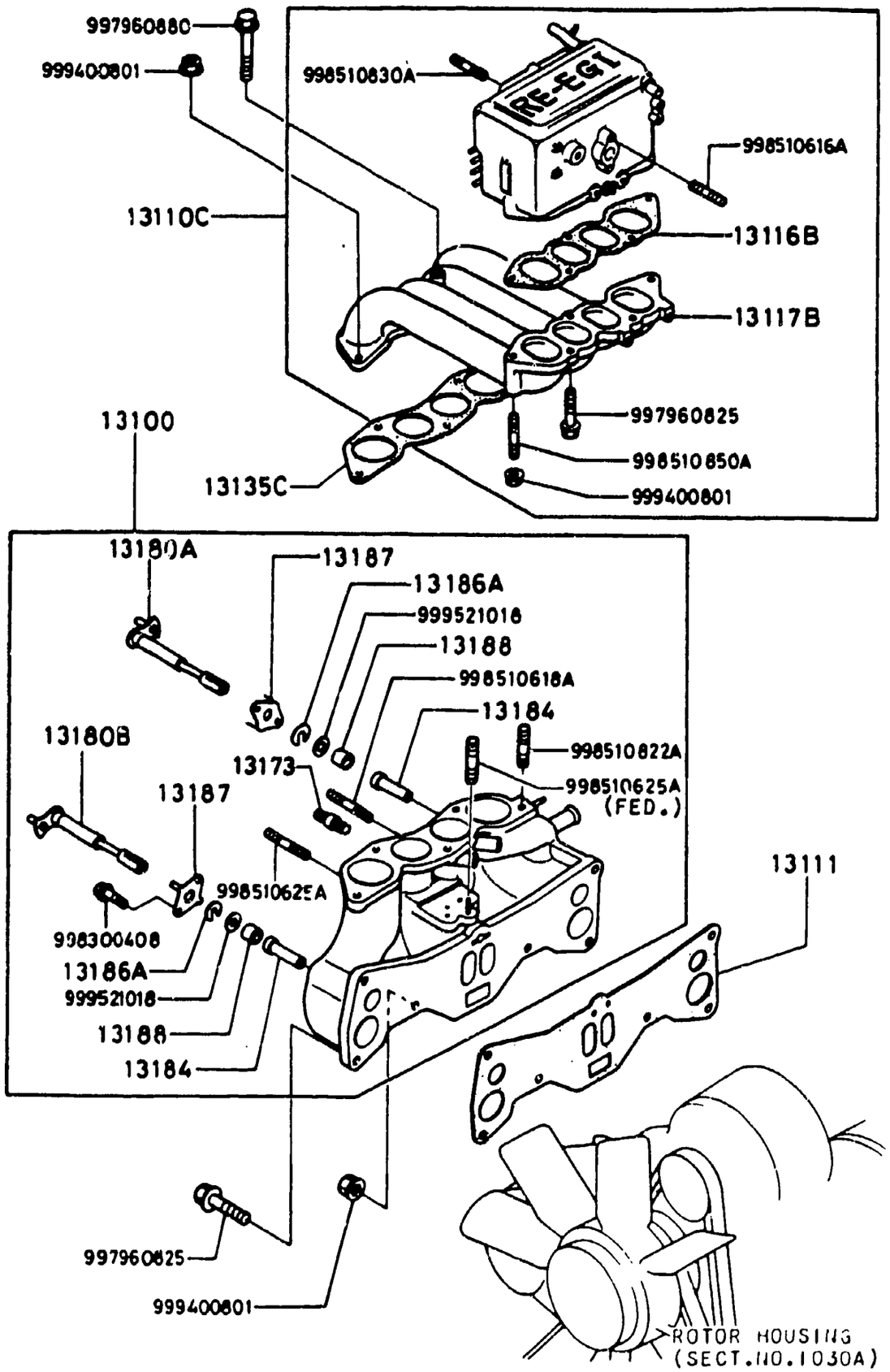

ITEM NO.	D-CODE	DESCRIPTION	PART NO.	QTY	MODEL/DESCRIPTION	REMARKS
	13 100	MANIFOLD, INTAKE	N304-13-100F	1	FED	
			N305-13-100F	1	CAL.	
	13 110C	CHAMBER, DYNAMIC	N304-13-110D	1		
	13 111	GASKET, INTAKE MANIFOLD	N304-13-111	1		
	13 116B	GASKET, RESO. CHAMBER	N304-13-116	1		
	13 117B	PIPE, INLET-RESO. CHAM	N304-13-117B	1		
	13 135C	GASKET	N304-13-114	1		
	13 173	STUD	N225-13-173A	2		
	13 180A	SHAFT, V.P.V. CONTROL	N304-13-180A	1		
	13 180B	SHAFT, V.P.V. CONTROL	N305-13-180A	1		
	13 184	BUSHING	N225-13-184	2		
	13 186A	PLATE, LOCATING	N225-13-186	2		
	13 187	COVER	N304-13-187	2		
	13 188	RUBBER, SEALING	N225-13-188A	2		

1310A-1 EXHAUST MANIFOLD (12A) (S,GS,GSL)

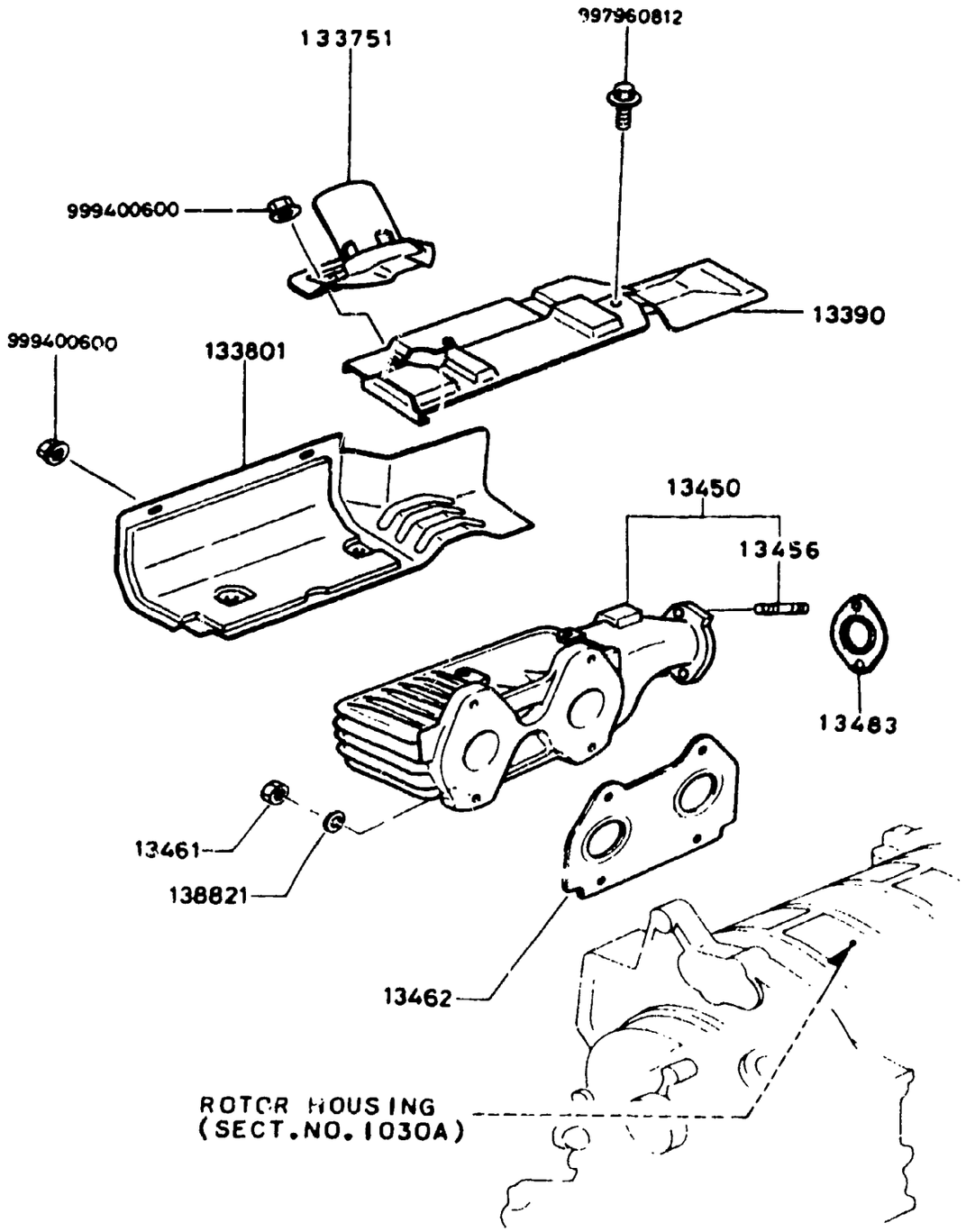

ITEM NO.	D-CODE	DESCRIPTION	PART NO	QTY	MODEL/DESCRIPTION	REMARKS
	13 3751	PIPE, HOT AIR DUCT	N249-13-375	1		
	13 3801	PLATE, ABSORBER	N249-13-380	1		
	13 390	DUCT, HOT AIR	N249-13-330A	1		
	13 450	MANIFOLD, EXHAUST	N249-13-600B	1		
	13 456	STUD	1757-13-857	2		
	13 461	NUT	8134-40-355	4		
	13 462	GASKET, EXHAUST MANIFOLD	1480-13-889A	1		
	13 483	GASKET, EXHAUST PIPE	1480-13-621	1		
	13 8821	WASHER, SPRING	9997-11-000	2	THRU AUG '84 PROD.	FB33* ..800001-861828
			E508-20-523	2	FROM SEP '84 PROD.	FB33* .861829-

1310AA-1 EXHAUST MANIFOLD (13B) (GSL-SE)

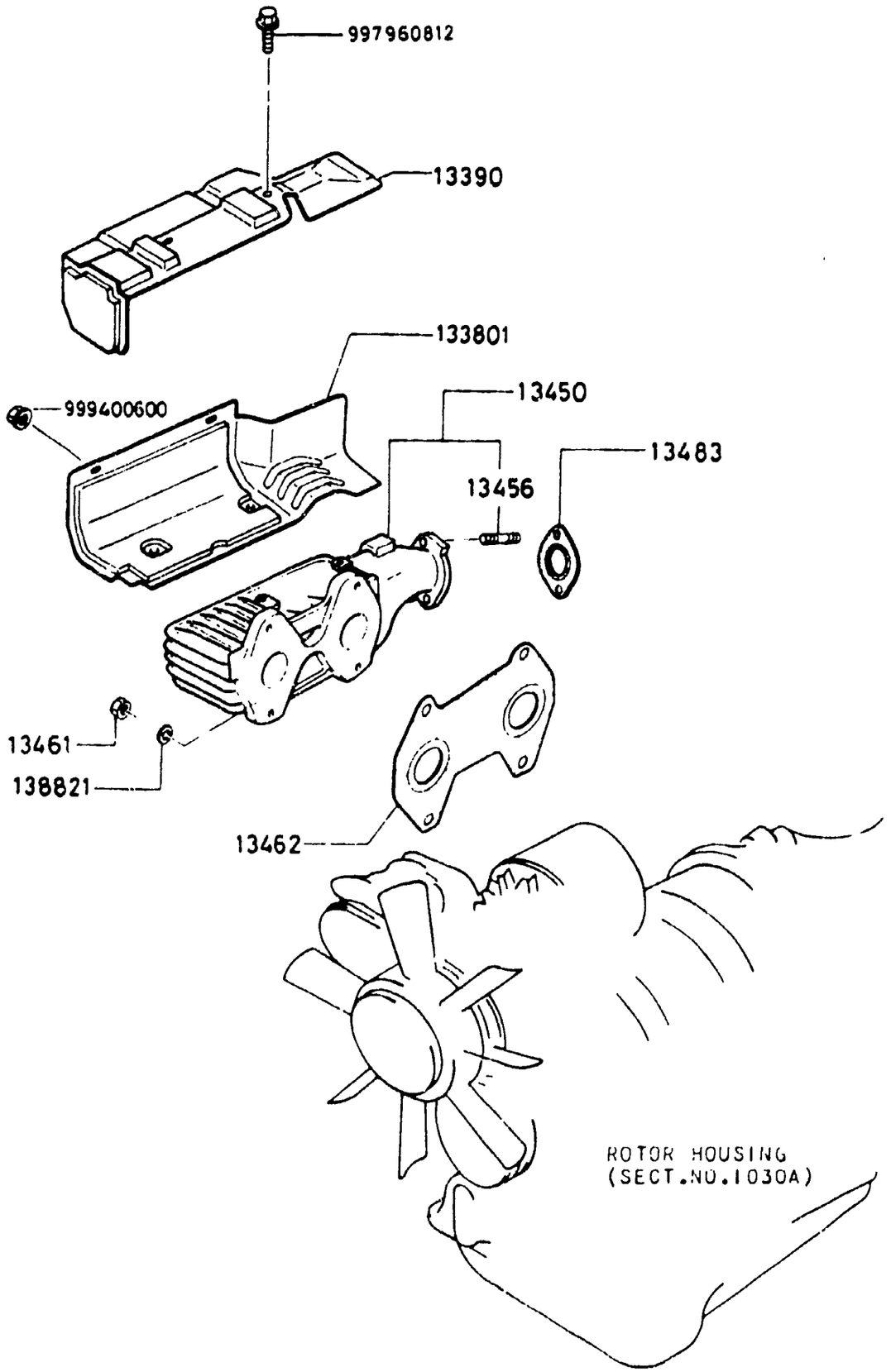

ITEM NO.	D-CODE	DESCRIPTION	PART NO.	QTY	MODEL/DESCRIPTION	REMARKS
	13 3801	PLATE, ABSORBER	N304-13-380A	1		
	13 390	DUCT, HOT AIR	N304-13-330B	1		
	13 450	MANIFOLD, EXHAUST	N304-13-600B	1		
	13 456	STUD	1757-13-857	2		
	13 461	NUT	8134-40-355	4		
	13 462	GASKET, EXHAUST MANIFOLD	N304-13-889	1		
	13 483	GASKET, EXHAUST PIPE	1480-13-621	1		
	13 8821	WASHER, SPRING	9997-11-000	2	THRU AUG '84 PROD.	FB33* ..800001-861828
			E508-20-524	2	FROM SEP '84 PROD.	FB33* ..861829-

1320A-1 FUEL SYSTEM (12A) (S,GS,GSL)

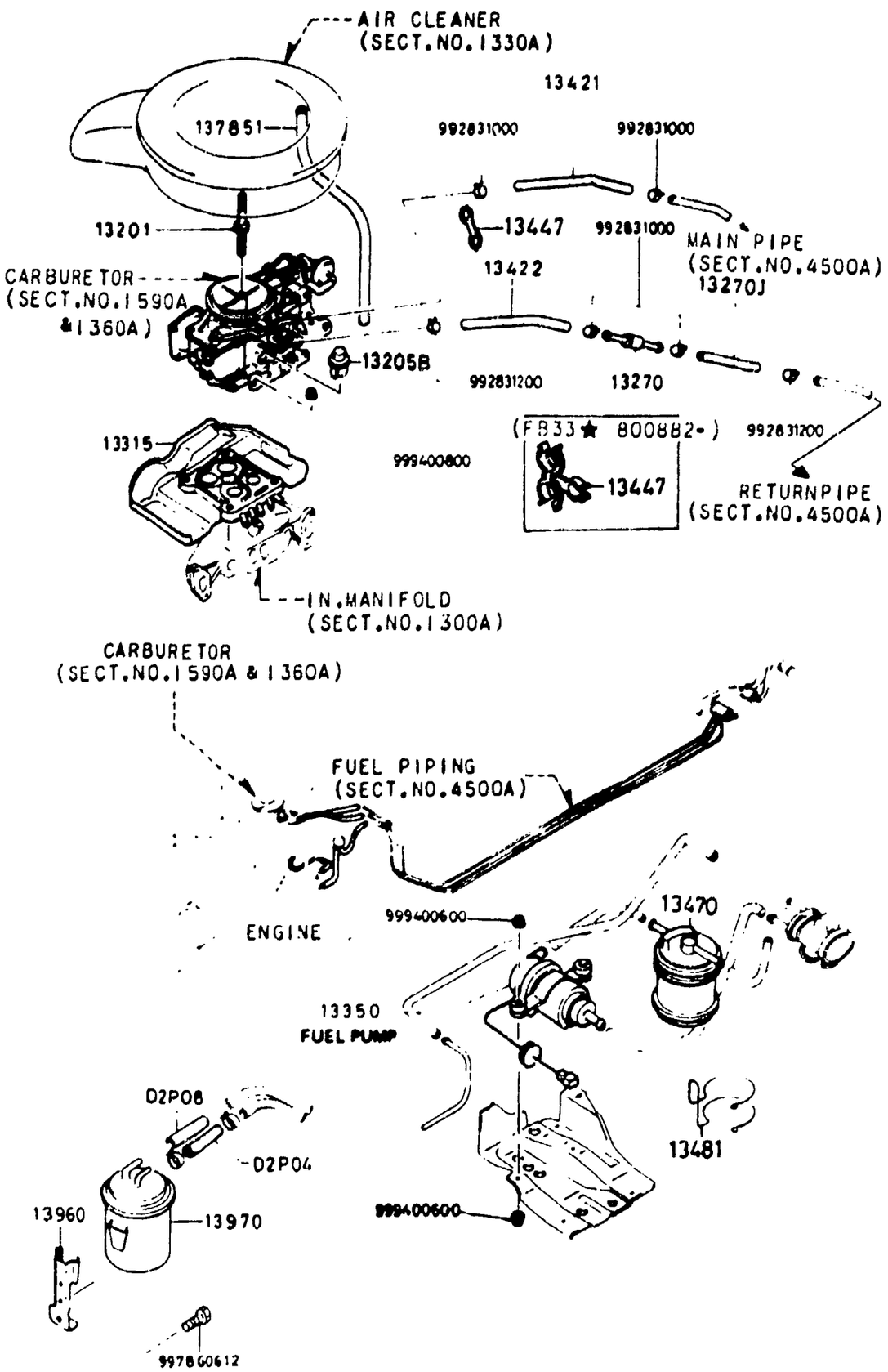

ITEM NO.	D-CODE	DESCRIPTION	PART NO	QTY	MODEL/DESCRIPTION	REMARKS
	13 201	BOLT, AIR CLEANER	8871-13-201A	1		
	13 205B	CAP, IDLE SWITCH	1481-13-205C	1		
	13 270	VALVE, CHECK	3648-13-270A	1		
	13 270J	HOSE, FUEL	9935-80-6999	1	(BULK QTY)	
	13 315	INSULATOR	1480-13-2208	1		
	13 350	PUMP, FUEL	N249-13-400B	1		
	13 421	HOSE, FUEL MAIN	9935-80-8999	1	(BULK QTY)	
	13 422	HOSE, FUEL RETURN	9935-80-6999	1	(BULK QTY)	
	13 447	CLIP	N231-13-445A	1		
	13 470	FILTER, FUEL	E508-13-470	1		
			E508-13-470 -BP	1	BLISTER PACK	
	13 481	CLAMP, FUEL FILTER	E508-13-481	1		
	13 7851	HOSE, VENTILATION	8871-13-785C	1		
	13 960	BRACKET, CANISTER	N304-20-611A	1		
	13 970	CANISTER	N231-20-610	1		
	D2 P04	HOSE, AIR	9935-10-4999	1	(BULK QTY)	
	D2 P08	HOSE, AIR	9935-10-8999	1	(BULK QTY)	

SECTION INDEX -- ENGINE

STARTING LOCATION	SECT NO	SECTION NAME
1-C 3	1000A	SHORT ENGINE & GASKET SETS
1-D 3	1030A	ROTOR HOUSING
1-E 3	1040A	OIL PAN FRONT & REAR HOUSING
1-G 3	1100A	ECCENTRIC SHAFT & FLYWHEEL
1-H 3	1110A	ROTOR & RELATED
1-I 3	1300A	INTAKE MANIFOLD (12A) (S,GS,GSL)
1-J 3	1300AA	INTAKE MANIFOLD (13B) (GSL-SE)
1-K 3	1310A	EXHAUST MANIFOLD (12A) (S,GS,GSL)
1-L 3	1310AA	EXHAUST MANIFOLD (13B) (GSL-SE)
1-M 3	1320A	FUEL SYSTEM (12A) (S,GS,GSL)
1-C 4	1320AA	FUEL SYSTEM (13B) (GSL-SE)
1-E 4	1230A	AIR CLEANER (12A) (S,GS,GSL)
1-F 4	1330AA	AIR CLEANER (13B) (GSL-SE)
1-G 4	1350A	STARTING ASSIST SYSTEM (12A) (S,GS,GSL) (FEDERAL ONLY)
1-H 4	1350AA	STARTING ASSIST SYSTEM (13B) (GSL-SE) (FEDERAL ONLY)
1-I 4	1359A	CARBURETOR & REPAIR KIT (12A) (S,GS,GSL)
1-J 4	1360A	CARBURETOR COMPONENTS (12A) (S GS,GSL)
1-L 4	1371A	AIR PUMP & AIR CONTROL VALVE (12A) (S GS,GSL)
1-M 4	1371AA	AIR PUMP & AIR CONTROL VALVE (13B) (GSL-SE)
1-N 4	1380A	EMISSION CONTROLS (12A) (S,GS GSL)
1-C 5	1380AA	EXHAUST SIDE EMISSION CONTROLS (13B) (GSL-SE)
1-E 5	1400A	OIL PUMP & FILTER (12A) (S,GS,GSL)
1-F 5	1400AA	OIL PUMP & FILTER (13B) (GSL-SE)
1-H 5	1500A	COOLING SYSTEM (12A) (S GS GSL)
1-I 5	1500AA	COOLING SYSTEM (13B) (GSL-SE)
1-K 5	1580A	COMPRESSOR BRACKET PULLEY & BELT
1-L 5	1600A	CLUTCH DISC & COVER
1-M 5	1700A	TRANSMISSION CASE (MANUAL)
1-C 6	1710A	TRANSMISSION GEARS (MANUAL)
1-G 6	1720A	CHANGE CONTROLS (MANUAL)
1-H 6	1800A	ENGINE ELECTRICAL SYSTEM
1-I 6	1820A	DISTRIBUTOR
1-J 6	1830A	ALTERNATOR
1-K 6	1840A	STARTER
1-M 6	1850A	BATTERY & CABLES
1-N 6	1910A	TORQUE, CONVERTER, OIL PUMP & PIPING (AUTOMATIC)
1-C 7	1920A	TRANSMISSION CASE & MAIN CONTROLS (AUTOMATIC)
1-E 7	1930A	CLUTCH & PLANETARY GEAR (AUTOMATIC)
1-G 7	1940A	LOW, REVERSE & GOVERNOR (AUTOMATIC)
1-H 7	1950A	MANUAL LINKAGE (AUTOMATIC
1-I 7	1960A	GASKET & SEAL KIT (AUTOMATIC)

1320AA-1 FUEL SYSTEM (13B) (GSL-SE)

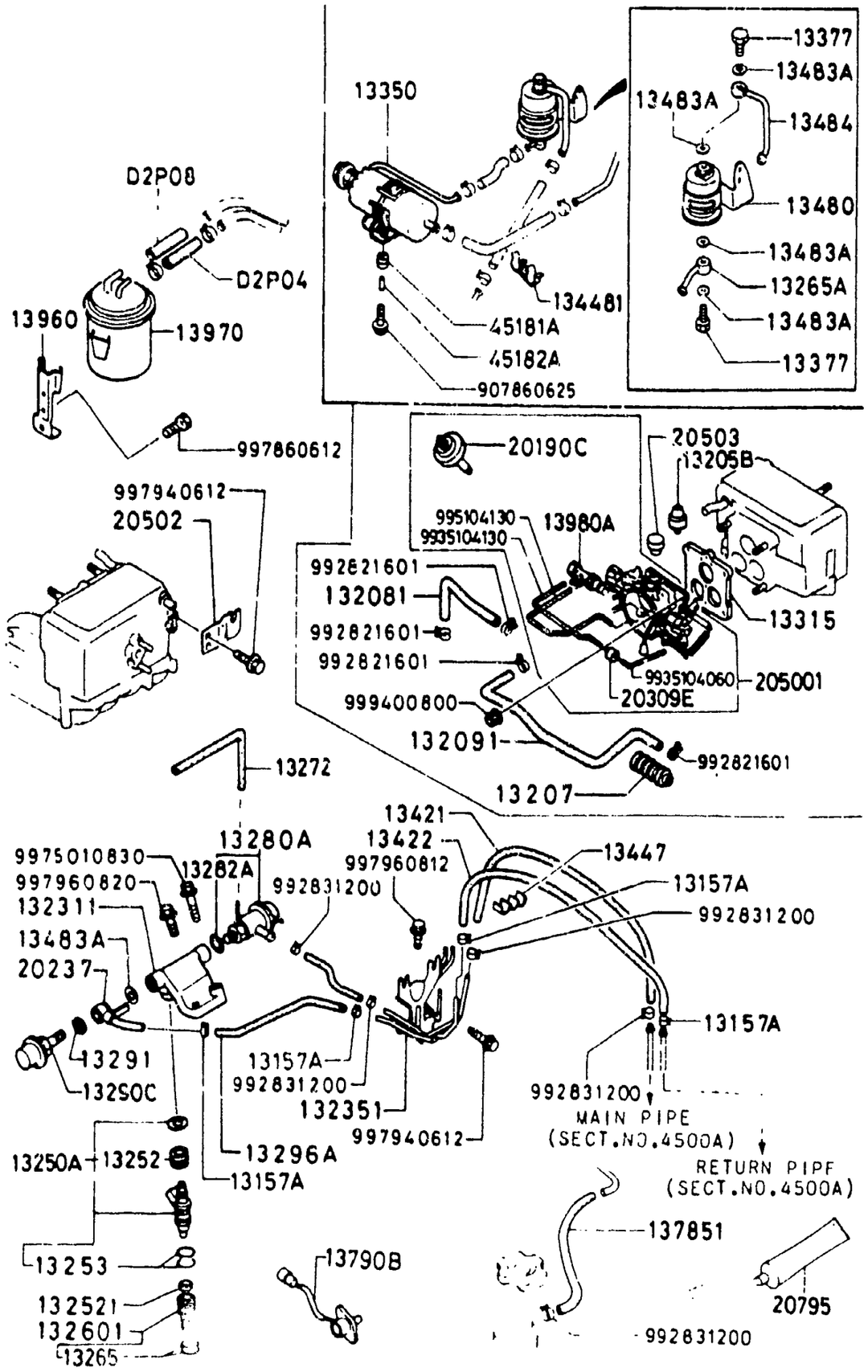

ITEM NO.	D-CODE	DESCRIPTION	PART NO	QTY	MODEL/DESCRIPTION	REMARKS
	13 157A	CLIP	8574-13-157	6		
	13 205B	CAP, IDLE SWITCH	1481-13-205C	1		
	13 207	PROTECTOR, WATER HOSE	HE21-13-428	1		
	13 2081	HOSE, WATER INLET	N304-13-208A	1		
	13 2091	HOSE, WATER OUTLET	N304-13-209	1		
	13 2311	PIPE, DELIVERY	N253-13-231	1		
	13 2351	PIPE, FUEL	N304-13-235D	1		
	13 250A	INJECTOR, FUEL	N304-13-250	2		
	13 252	GROMMET	8574-13-252	2		
	13 2521	INSERT, RUBBER	N236-13-252	2		
	13 253	O-RING	8574-13-253	2		
	13 2601	SOCKET, AIR BLEED	N305-13-260	2		
	13 265	O-RING	9954-10-1252	4		
	13 265A	CONNECTOR, FUEL	N304-13-481B	1		
	13 272	HOSE, FUEL	9935-80-8999	1	BULK QTY THRU FEB '84 PROD.	FB33* ..800001-823267
			N304-13-272	1	FORMED HOSE FROM MAR '84 PROD.	FB33* ..823268-
	13 280	REGULATOR, FUEL PRESSURE	N253-13-280	1		
	13 282A	O-RING	N253-13-282	1		
	13 290C	DAMPER, PULSATION	N304-13-230	1		
	13 291	GASKET	N304-13-291	1		
	13 296A	HOSE, FUEL	N326-13-416	1		
	13 315	INSULATOR	N304-13-220B	1		
	13 350	PUMP, FUEL	N304-13-350C	1		
	13 377	BOLT, CONNECTOR	N236-13-482	2		
	13 421	HOSE, FUEL MAIN	N304-13-420	1		
	13 422	HOSE, FUEL RETURN	N304-13-276C	1		
	13 447	CLIP	N304-13-447	1		
	13 4481	CLIP	N304-13-448	1		
	13 480	FILTER, FUEL	N304-13-[illegible]	1		
	13 483A	GASKET	N236-13-483	5		
	13 484	CONNECTOR, FUEL FILTER	N304-13-484	1		
	13 7851	HOSE, VENTILATION	N304-13-785A	1		
	13 790B	RESISTOR, VARIABLE	N236-13-790B	1		
	13 960	BRACKET, CANISTER	N304-20-611A	1		
	13 970	CANISTER	N231-20-610	1		
	13 980A	VALVE THERMO	N304-13-980A	1		
	20 190C	DASH POT	8341-13-215	1		
	20 237	CONNECTOR FUEL	N304-20-237A	1		
	20 309E	VALVE DELAY	HE01-20-309	1		

1320AA-2 FUEL SYSTEM (13B) (GSL-SE)

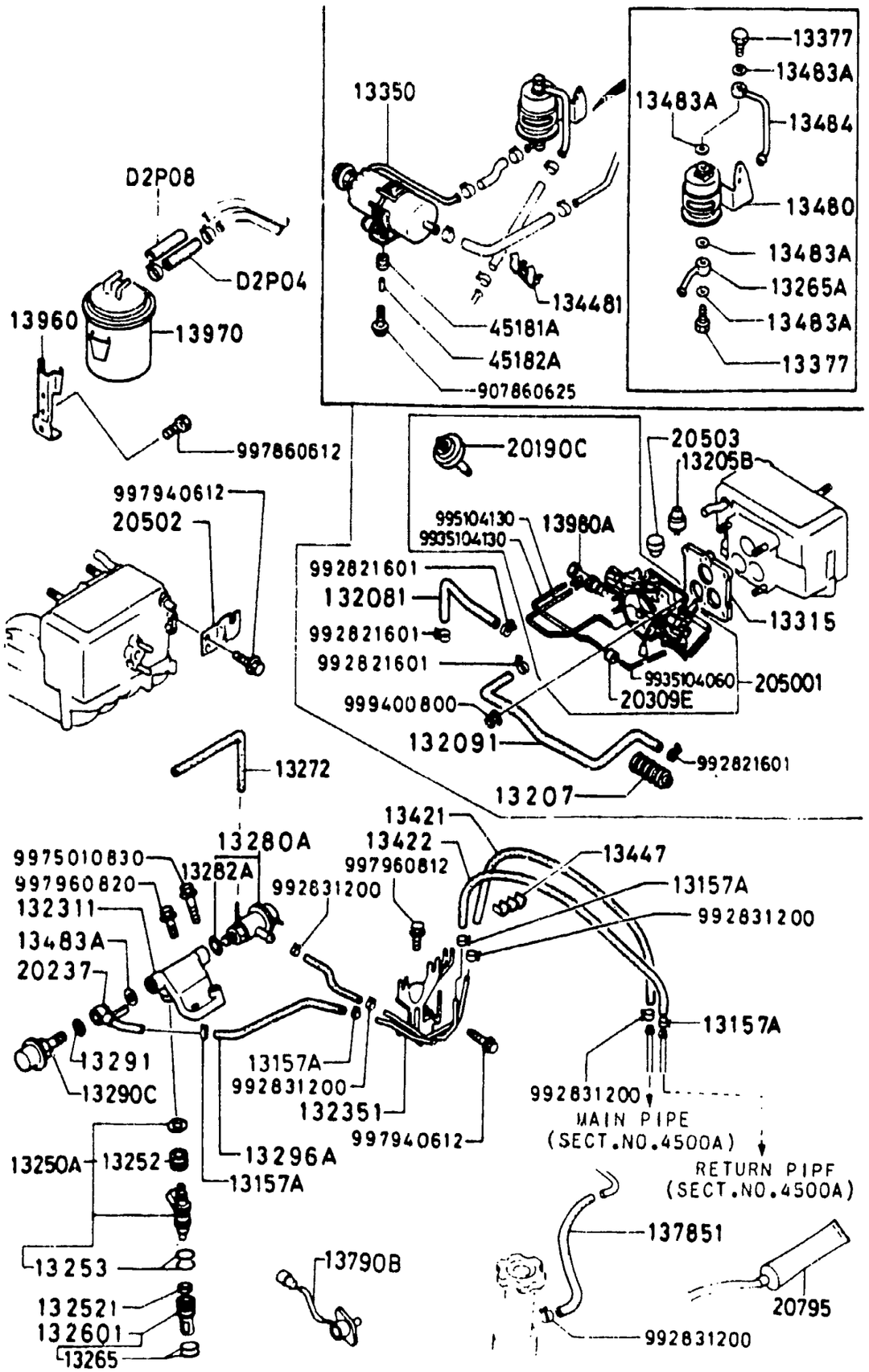

ITEM NO.	D-CODE	DESCRIPTION	PART NO	QTY	MODEL/DESCRIPTION	REMARKS
	20 5001	CHAMBER, THROTTLE	N304-20-500B	1		
	20 502	BRACKET	N304-20-502A	1		
	20 503	CAP, AIR ADJUST	N304-20-503A	1	THRU JUN '84 PROD.	FB33* ..800001-856208
	45 181A	RUBBER, MOUNTING	FA23-45-181	2		
	45 182A	SPACER	FA23-45-182	2		
	D2 P04	HOSE, AIR	9935-10-4999	1	BULK QTY	
	D2 P08	HOSE, AIR	9935-10-8999	1	BULK QTY	

1330A-1 AIR CLEANER (12A) (S,GS,GSL)

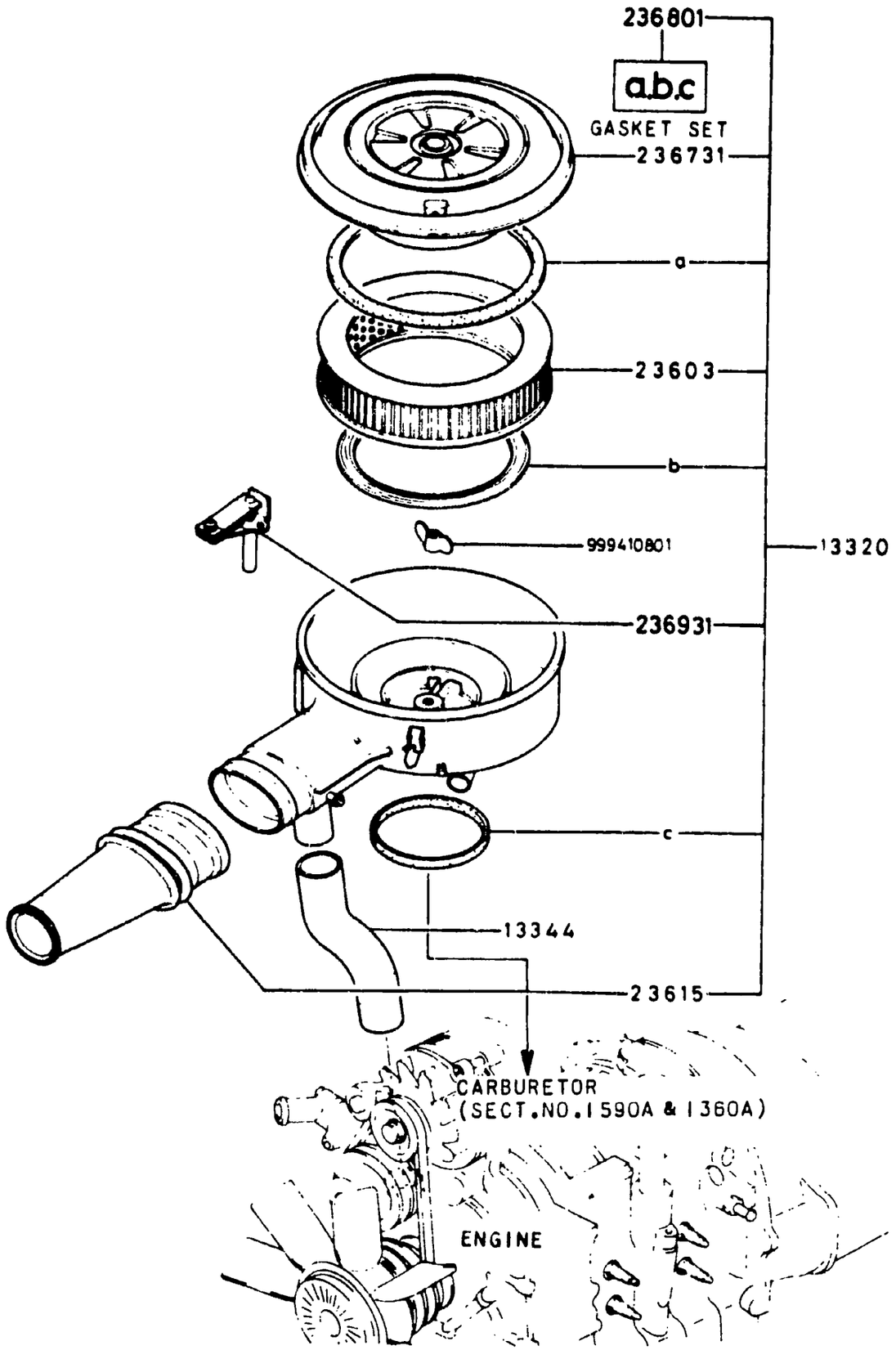

ITEM NO.	D-CODE	DESCRIPTION	PART NO.	QTY	MODEL/DESCRIPTION	REMARKS
	13 320	CLEANER, AIR	N249-13-300A	1		
	13 344	HOSE, HOT AIR	8871-13-341A	1		
	23 603	ELEMENT, AIR CLEANER	8341-23-672	1		
	23 615	PIPE, AIR INTAKE	1757-13-351A	1		
	23 6731	COVER	8245-23-673	1		
	23 6801	GASKET SET	1757-23-680	1		
	23 6931	COMPENSATOR	3648-23-693A	1		

1330AA-1 AIR CLEANER (13B) (GSL-SE)

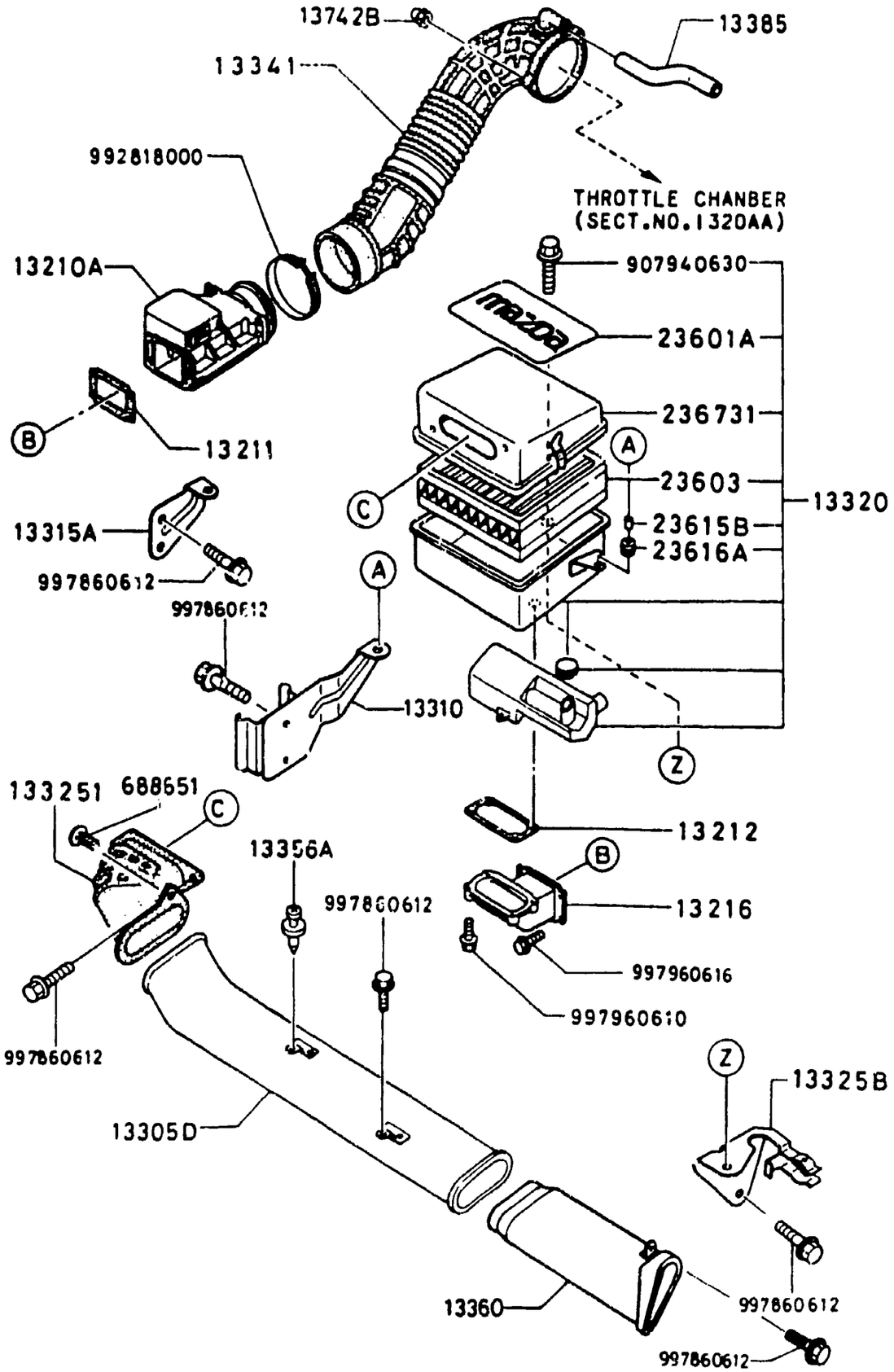

ITEM NO.	D-CODE	DESCRIPTION	PART NO.	QTY	MODEL/DESCRIPTION	REMARKS
	13 210A	METER, AIR FLOW	N304-13-210	1		
	13 211	GASKET	N236-13-211	1		
	13 212	GASKET	N304-13-212	1		
	13 216	ADAPTER, AIR FLOW	N304-13-215	1		
	13 305D	DUCT, AIR	N304-13-351A	1		
	13 310	BRACKET, AIR CLEANER	FA66-56-360	1		
	13 315A	BRACKET, AIR CLEANER	N304-13-315A	1		
	13 320	CLEANER, AIR	N304-13-300B	1		
	13 3251	DUCT, AIR	N304-13-353A	1		
	13 3258	BRACKET, AIR CLEANER	N304-13-320B	1		
	13 341	FUNNEL, AIR	N304-13-740C	1		
	13 356A	RIVET	N304-13-356B	1		
	13 360	DUCT, AIR	N304-13-352	1	FROM AUG '84 PROD.	FB33* ..856209-
	13 385	HOSE, AIR	N304-13-773	1		
	13 7428	NUT, CAP	N236-13-742	2		
	23 601A	SEAL, ORNAMENT	N304-23-301	1		
	23 603	ELEMENT, AIR CLEANER	N236-23-672	1		
	23 6158	COLLAR	1372-23-615	3		
	23 616A	INSULATOR	1372-23-616	3		
	23 6731	COVER	N304-23-673	1		
	68 8651	FASTENER, AIR DUCT	S049-68-865	1		
		BLACK	00			

1350A-1 STARTING ASSIST SYSTEM (12A) (S,GS,GSL) (FEDERAL ONLY)

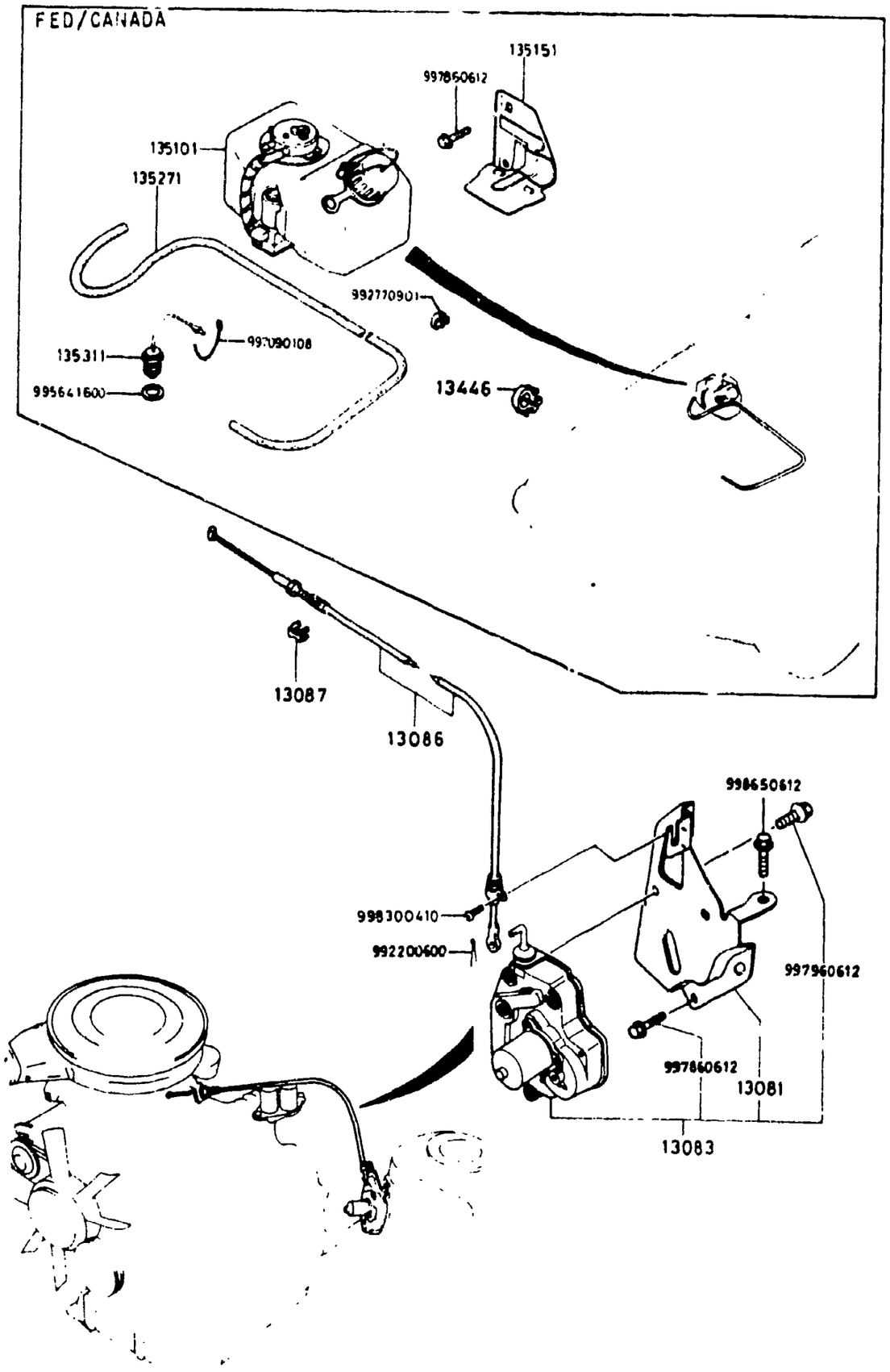

ITEM NO.	D-CODE	DESCRIPTION	PART NO.	QTY	MODEL/DESCRIPTION	REMARKS
	13 081	BRACKET	N229-13-081	1		
	13 083	MOTOR	N229-13-085	1		
	13 086	WIRE	N225-13-086A	1		
	13 087	SPRING	8871-13-087A	2		
	13 446	CLIP	N231-13-446	1		
	13 5101	TANK, STARTING FLUID	1881-13-510G	1		
	13 5151	BRACKET, TANK	1757-13-515A	1		
	13 5271	HOSE	8871-13-527	1		
	13 5311	THERMO UNIT	8712-13-531	1		

1350AA-1 STARTING ASSIST SYSTEM (13B) (GSL-SE) (FEDERAL ONLY)

FED/CANADA

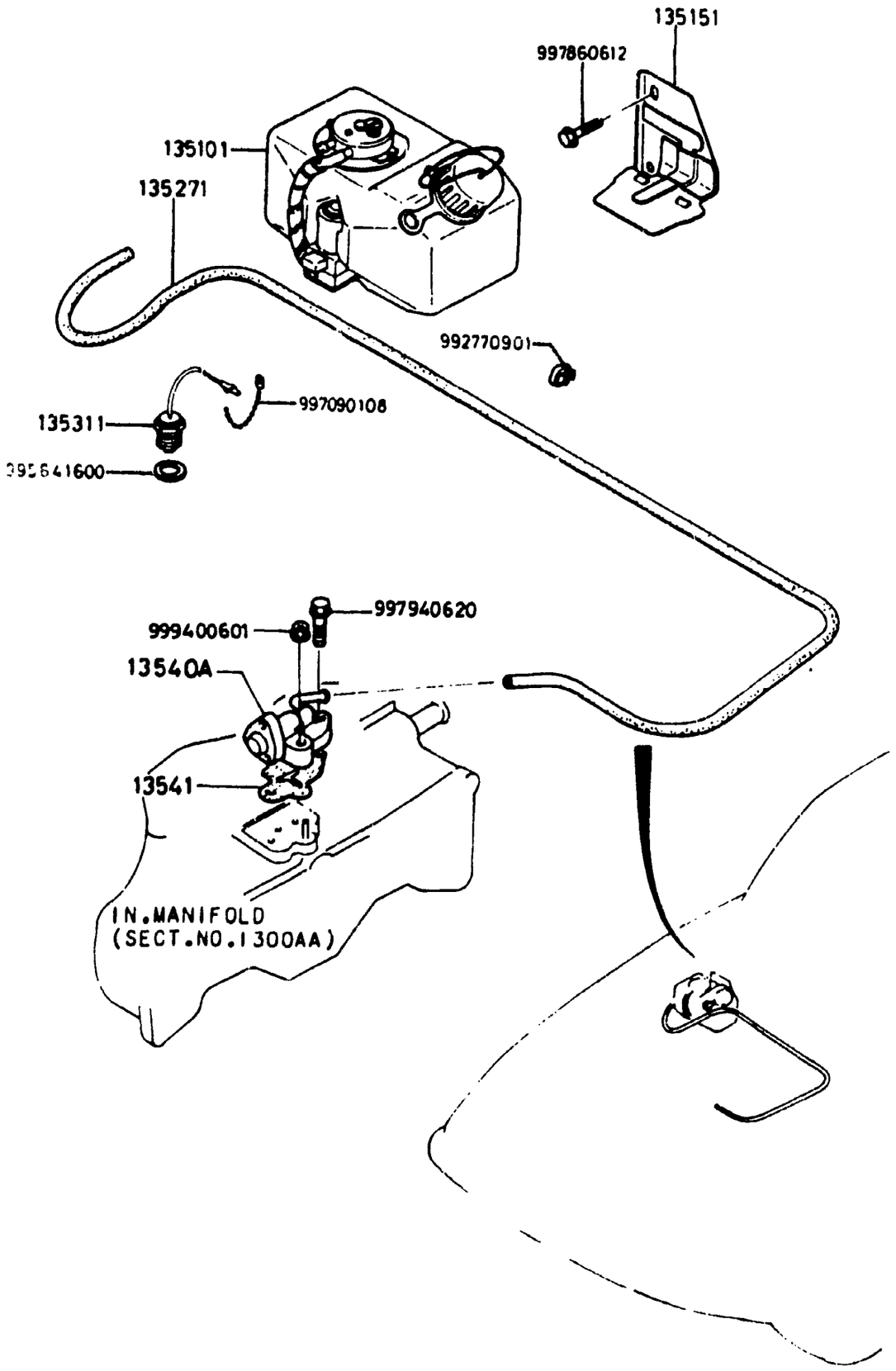

ITEM NO.	D-CODE	DESCRIPTION	PART NO.	QTY	MODEL/DESCRIPTION	REMARKS
	13 5101	TANK, STARTING FLUID	1881-13-510G	1		
	13 5151	BRACKET, TANK	1757-13-515A	1		
	13 5271	HOSE	N304-13-527A	1		
	13 5311	THERMO UNIT	8712-13-531	1		
	13 540A	VALVE, STARTING FLUID	N304-13-540C	1		
	13 541	GASKET	N326-13-A66	1		

1359A-1 CARBURETOR & REPAIR KIT (12A) (S,GS,GSL)

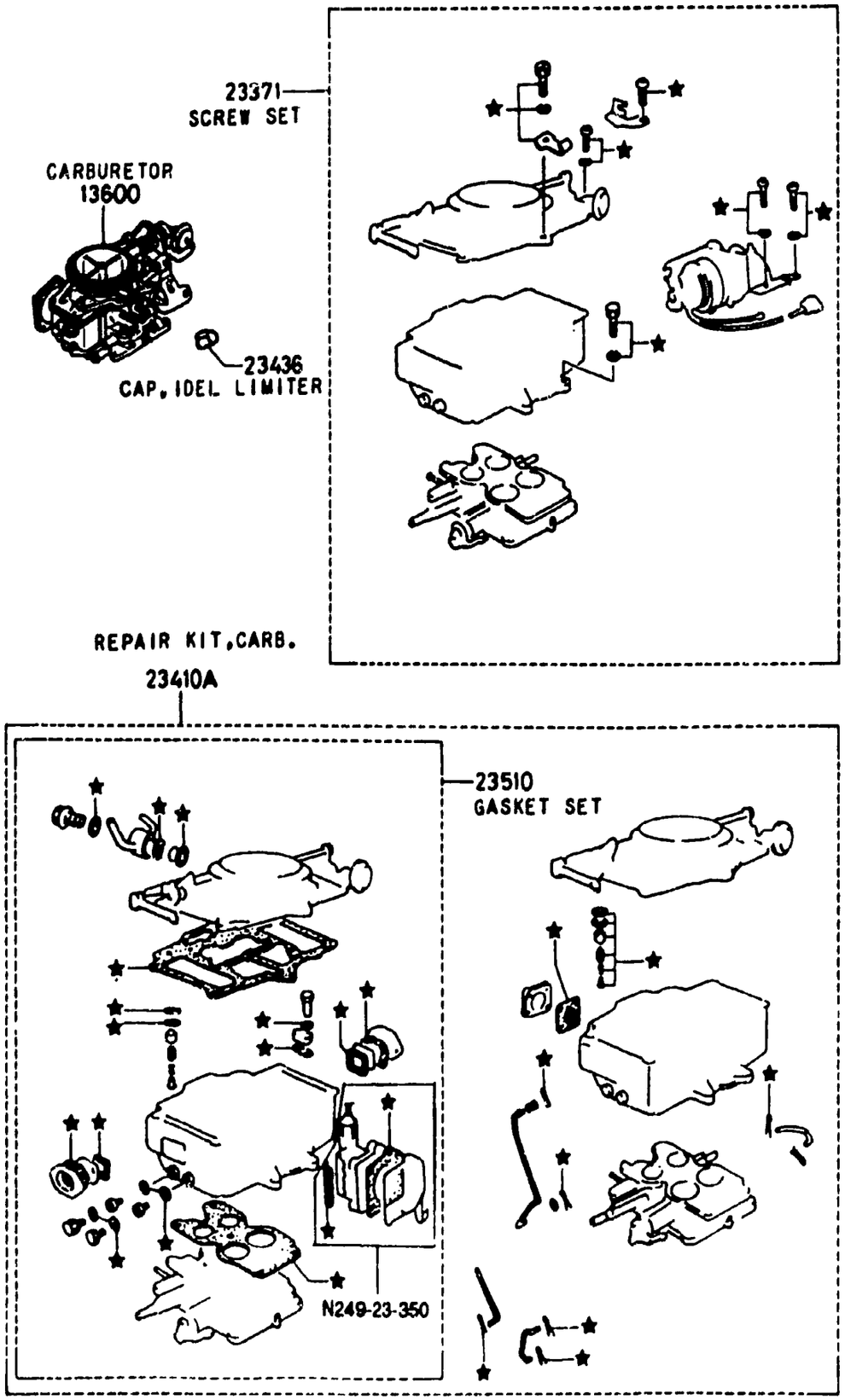

ITEM NO.	D-CODE	DESCRIPTION	PART NO.	QTY	MODEL/DESCRIPTION	REMARKS
	13 600	CARBURETOR	N249-13-200F	1	FED M/T	
			N250-13-200E	1	FED A/T	
			N251-13-200F	1	CAL. M/T	
			N252-13-200E	1	CAL. A/T	
	23 371	SCREW SET	N201-23-652	1		
	23 410A	REPAIR KIT, CARBURETOR	N249-99-131	1		
	23 436	CAP, IDLE LIMITER	N201-13-205	1		
	23 510	GASKET SET	N201-23-510	1		

1360A-1 CARBURETOR COMPONENTS (12A) (S,GS,GSL)

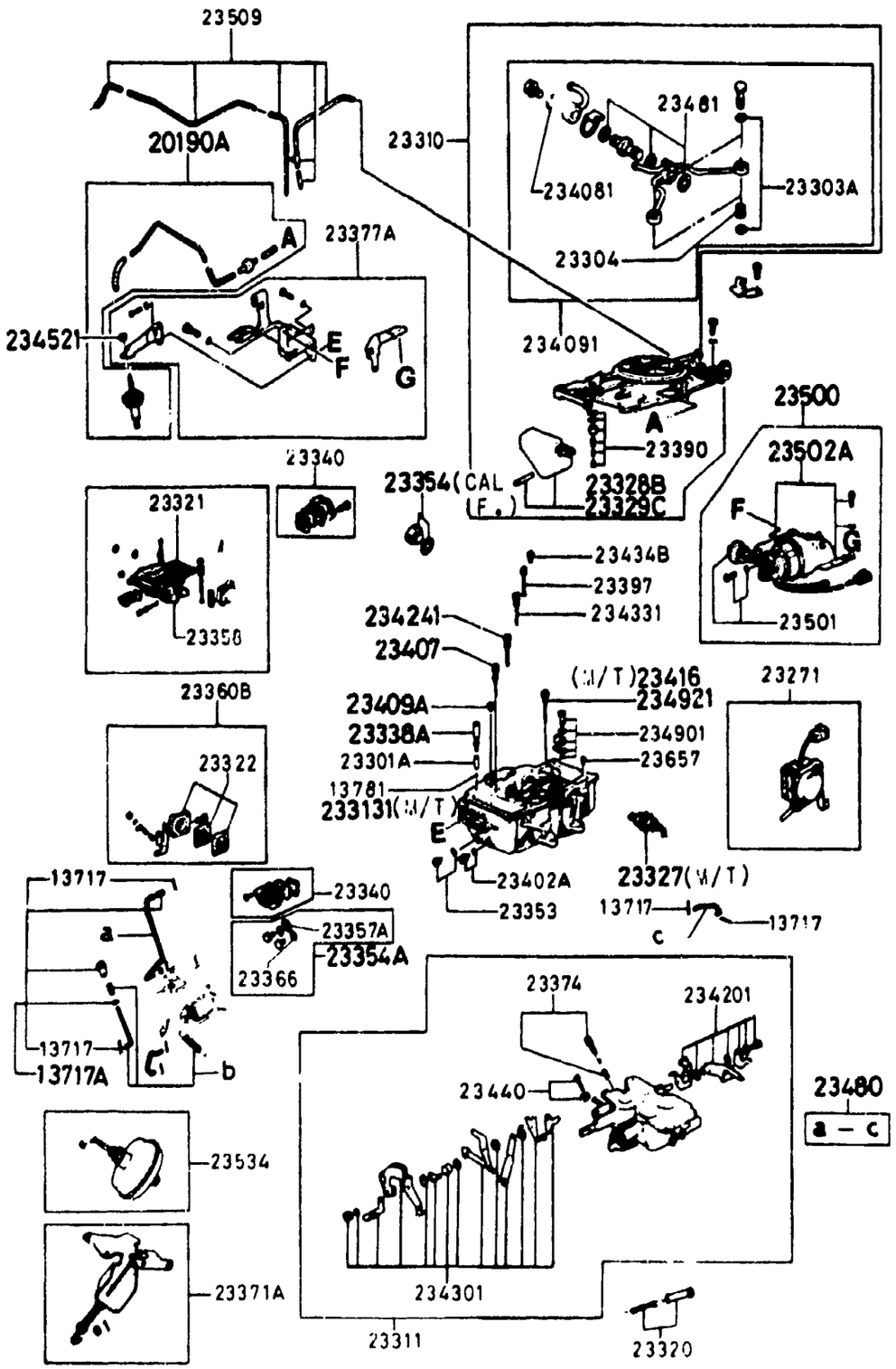

* SEE SERVICE BULLETIN 014/85-CATEGORY 4 FOR CARBURETOR ALTITUDE COMPENSATOR VALVE INFORMATION

ITEM NO.	D-CODE	DESCRIPTION	PART NO.	QTY	MODEL/DESCRIPTION	REMARKS
	13 717	PIN, COTTER	1663-23-392	7		
	13 717A	PIN & WASHER SET	8871-23-530	1		
	13 781	BALL, STEEL	0107-13-781	1		
	20 190A	DASH POT	8341-13-215	1		
	23 271	CHAMBER SET, DIAPHRAGM	N249-23-350	1		
	23 301A	WEIGHT, PUMP	3743-23-488	1		
	23 303A	GASKET	0730-23-318	4		
	23 304	STRAINER	8871-23-401	2		
	23 310	HORN, AIR	N249-23-310	1		
	23 311	CHAMBER, THROTTLE	N249-23-330	1	M/T	
			N250-23-330	1	A/T	
	23 3131	SPACER	N249-23-313	1	M/T	
	23 320	SPRING SET, RETURN	N201-23-380	1		
	23 321	GASKET, FLOAT CHAMBER	N201-23-327	1		
	23 322	DIAPHRAGM, CARBURETOR	N201-23-361	1		
	23 327	VALVE, SOLENOID-A.V.	N249-23-326	1	M/T	
	23 328B	FLOAT SET, FRONT	N201-23-328	1		
	23 329C	FLOAT SET, REAR	N201-23-329	1		
	23 338A	SHEET, CHECK VALVE	8826-23-338	1		
	23 340	COVER SET, LEV. GAUGE	3743-23-340	2		
	23 353	JET SET, MAIN 1ST	1955-23-421	2	M/T	
			N202-23-421	2	A/T	
	23 354	PLUG SET	1570-23-507	1	FED	
			2183-23-508	1	CAL.	
	23 354A	PLUG, MAIN JET	8980-23-354	2		
	23 357A	CLAMP, MAIN JET PLUG	8980-23-357	2		
	23 358	GASKET, FLANGE	8341-23-349	1		
	23 360B	PUMP SET, ACCEL.	N201-23-360	1		
	23 366	WASHER	0305-23-356	4		
	23 371A	HOLDER SET, RETURN	N201-23-371	1		
	23 374	SCREW SET, IDLE ADJ.	N201-23-460	1		
	23 377A	BRACKET SET	N231-23-370	1		
	23 390	VALVE SET, FLOAT	N249-23-390	2		
	23 397	JET, STEP	N201-23-426	2		
	23 402A	JET SET, MAIN 2ND	0222-23-355B	2		
	23 407	JET SET, SLOW	3743-23-425	2		
	23 4081	WASHER	0823-23-402A	1		
	23 4091	CONNECTOR SET, FUEL	8871-23-409A	1		
	23 409A	JET, SLOW AIR BLEED	3744-23-391	2	A T	
			3824-23-409	2	M T	

1360A-2 CARBURETOR COMPONENTS (12A) (S,GS,GSL)

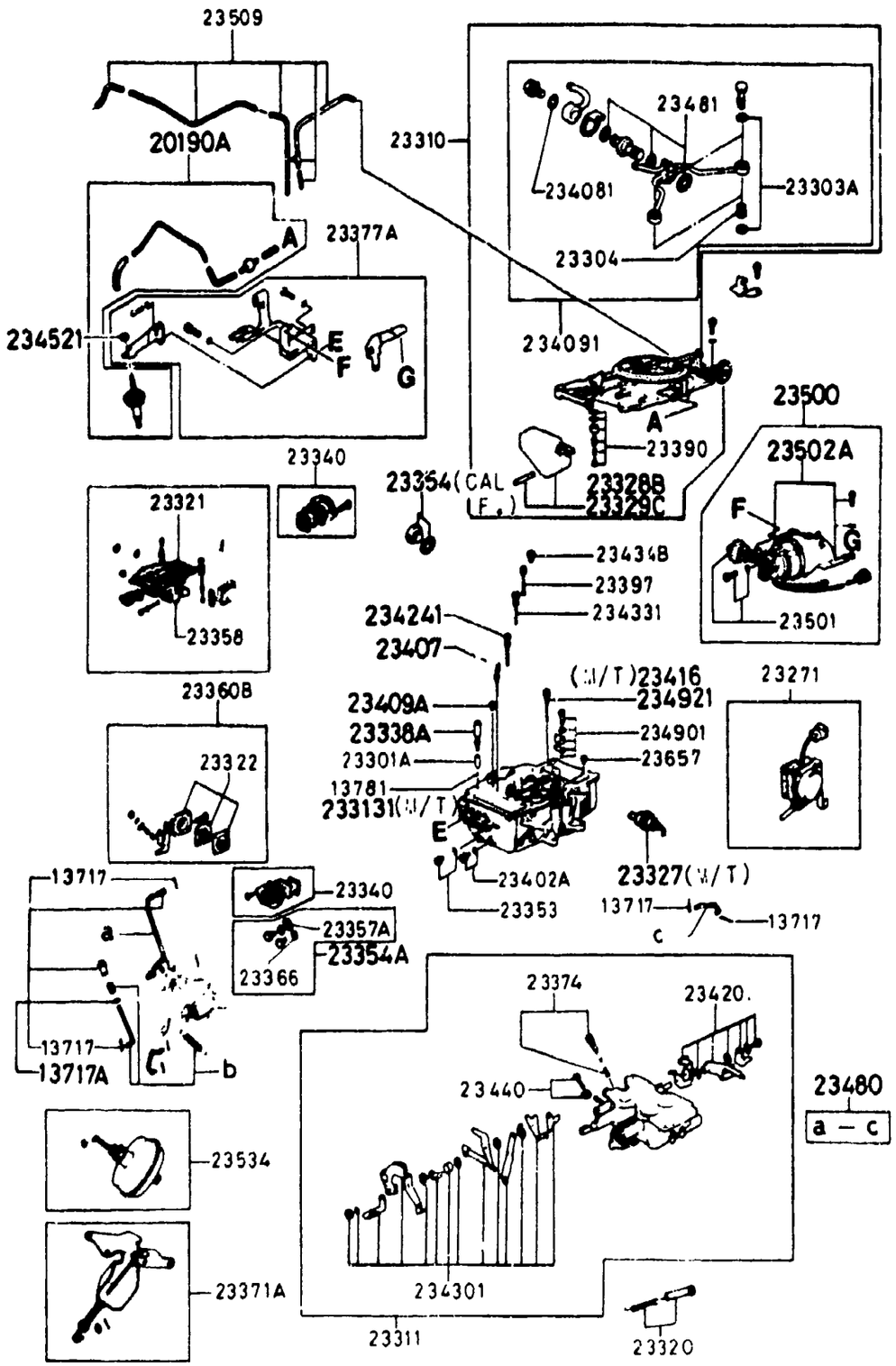

* SEE SERVICE BULLETIN 014/85-CATEGORY 4 FOR CARBURETOR ALTITUDE COMPENSATOR VALVE INFORMATION

ITEM NO.	D-CODE	DESCRIPTION	PART NO.	QTY	MODEL/DESCRIPTION	REMARKS
	23 416	JET, COASTING	N251-23-491	1	M/T	
	23 4201	LEVER SET, FRONT	N231-23-420	1		
	23 4241	JET, AIR BLEED 1ST	N201-23-423	2	M/T	
			N202-23-423	2	A/T	
	23 4301	LEVER SET, REAR	N231-23-430	1		
	23 4331	JET, AIR BLEED 2ND	8871-23-424	2		
	23 434B	JET, SLOW AIR BLEED	8649-23-434	2		
	23 440	SCREW SET, THROTTLE ADJUST	N201-23-440	1		
	23 4521	NUT, HEXAGON	2090-23-452	1		
	23 480	ROD & LINK SET	N201-23-480	1		
	23 481	GASKET	0823-23-394	3		
	23 4901	NOZZLE SET, ACCEL.	N201-23-490	1		
	23 4921	JET, AIR BLEED	N201-23-492	1		
	23 500	CHOKE SET, SEMI AUTO	N201-23-500A	1	(#1 CHOKE DIAPH.)	
	23 501	HOLDER, BI-METAL	N201-23-501	1	(DIAPHRAGM NOT INCLUDED.)	
	23 502A	CASE, THERMOSTAT	N201-23-502A	1		
	23 509	PIPE SET, VACUUM	N201-23-509	1		
	23 534	CHOKE SET, RETURN	N201-23-503	1	(#2 CHOKE DIAPH.)	
	23 657	PLUG, BLIND	0107-23-657	1	M/T	

1371A-1 AIR PUMP & AIR CONTROL VALVE (12A) (S,GS,GSL)

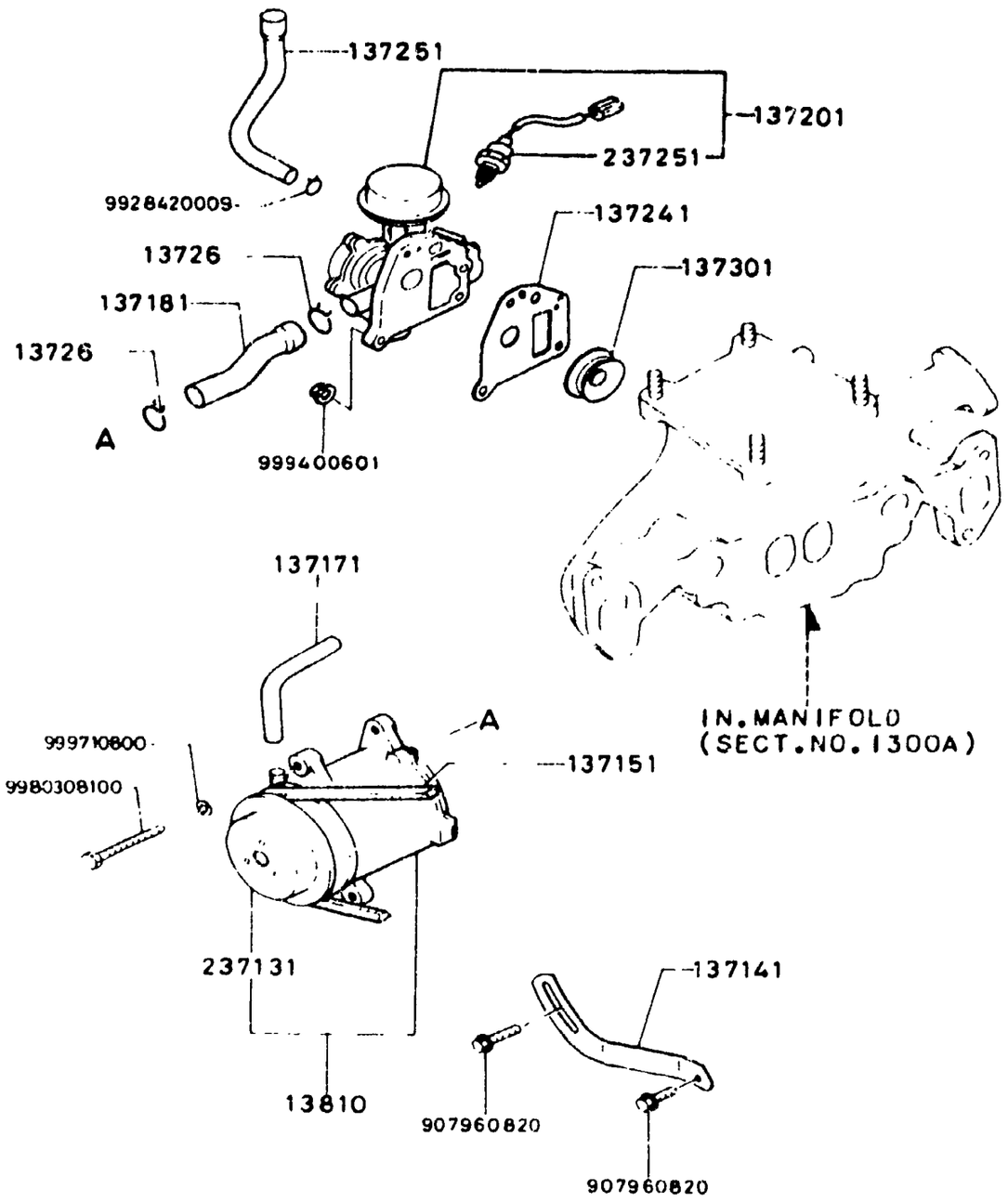

ITEM NO.	D-CODE	DESCRIPTION	PART NO	QTY	MODEL/DESCRIPTION	REMARKS
	13 7141	STRAP, AIR PUMP	1757-13-714	1		
	13 7151	BELT, AIR PUMP	1757-13-715	1		
	13 7171	HOSE, AIR	1757-13-717	1		
	13 7181	HOSE, AIR	1480-13-718A	1		
	13 7201	VALVE, AIR CONTROL	N249-13-720A	1	FED M/T THRU FEB '84 PROD.	FB33* ..800001-824686
			N249-13-720B	1	FED M/T FROM MAR '84 PROD.	FB33* .824687-
			N250-13-720	1	FED A/T THRU FEB '84 PROD.	FB33* ..800001-824686
			N250-13-720A	1	FED A/T FROM MAR '84 PROD.	FB33* ..824687-
			N251-13-720A	1	CAL M/T THRU FEB '84 PROD.	FB33* ..800001-824686
			N251-13-720B	1	CAL M/T FROM MAR '84 PROD.	FB33* ..824687-
			N252-13-720	1	CAL. A/T THRU FEB '84 PROD.	FB33* ..800001-824686
			N252-13-720A	1	CAL. A/T FROM MAR '84 PROD.	FB33* ..824687-
		SEE SERVICE BULLETIN 002/84, CAT. 4 FOR MORE AIR CONTROL SYSTEM INFO				
	13 7241	GASKET, A/C VALVE	N201-13-724	1		
	13 7251	HOSE, AIR	N201-13-725	1		
	13 726	CLIP, AIR HOSE	1480-13-726	2		
	13 7301	VALVE, CHECK	1480-13-730	1	(INTAKE MANIFOLD)	
	13 810	PUMP, AIR	1757-13-710B	1		
	23 7131	PULLEY, AIR PUMP	1757-23-713A	1		
	23 7251	VALVE, AIR CONTROL SOLENOID	N249-20-725	1	(BLACK COUPLER)	
			N250-20-725	1	(BLACK COUPLER) FROM MAR '84 PROD.	FB33* .824687-

1371AA-1 AIR PUMP & AIR CONTROL VALVE (13B) (GSL-SE)

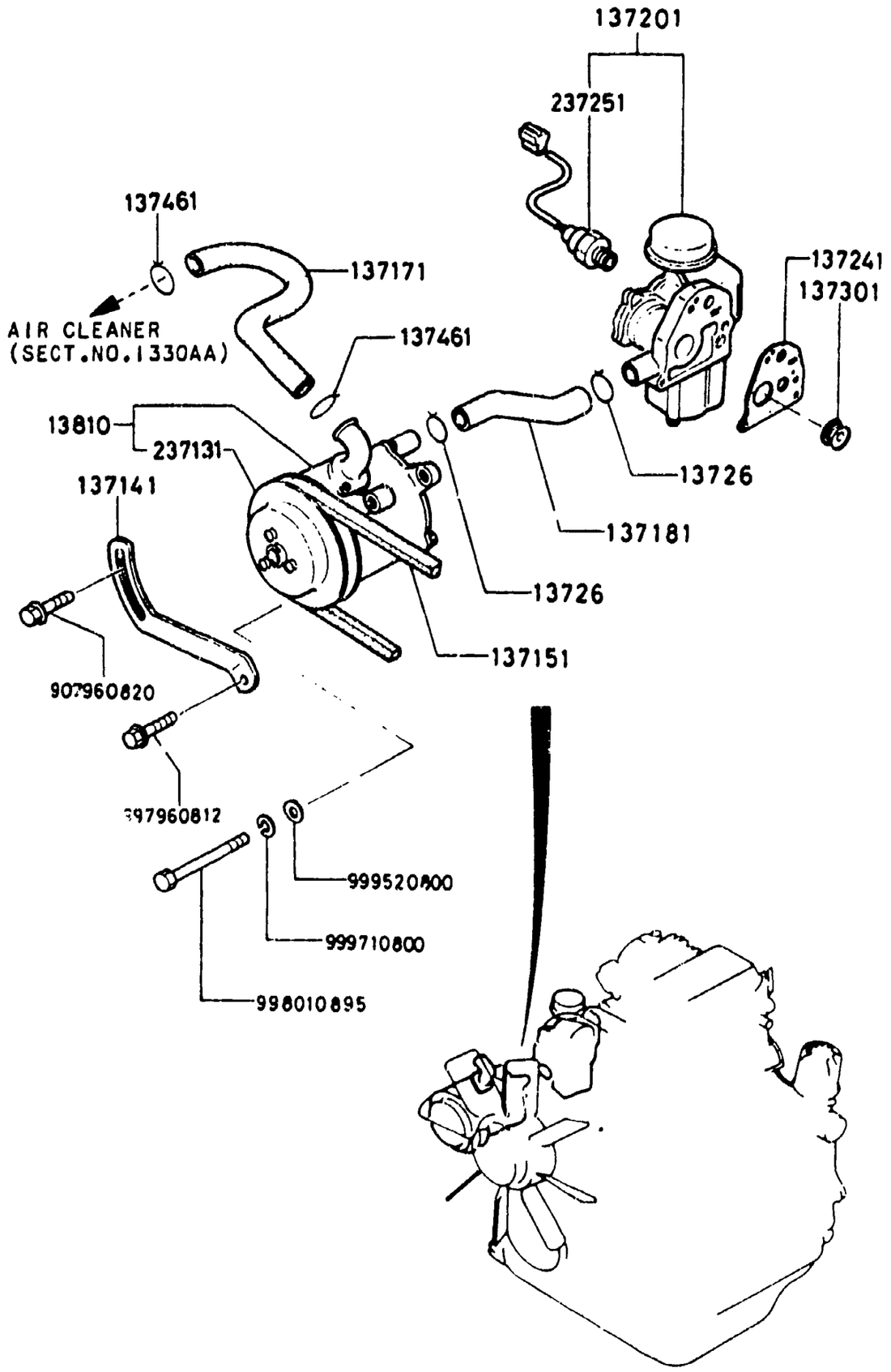

ITEM NO	D-CODE	DESCRIPTION	PART NO	QTY	MODEL/DESCRIPTION	REMARKS
	13 7141	STRAP, AIR PUMP	N304-13-714A	1		
	13 7151	BELT, AIR PUMP	N304-13-715	1		
	13 7171	HOSE, AIR	N304-13-717A	1		
	13 7181	HOSE, AIR	N304-13-718A	1		
	13 7201	VALVE, AIR CONTROL	N304-13-720B	1		
	13 7241	GASKET, A/C VALVE	N304-13-724A	1		
	13 726	CLIP, AIR HOSE	N304-13-726	2		
	13 7301	VALVE, CHECK	1480-13-730	1	(INTAKE MANIFOLD)	
	13 7461	CLIP, AIR HOSE	1480-13-726	2		
	13 810	PUMP, AIR	N304-13-710	1		
	23 7131	PULLEY, AIR PUMP	N304-23-713	1		
	23 7251	VALVE, AIR CONTROL SOLENOID	N304-20-725	1		
		SEE SERVICE BULLETIN 011/35 CATEGORY 4 FOR MORE VALVE INFO.				

1380A-1 EMISSION CONTROLS (12A) (S,GS,GSL)

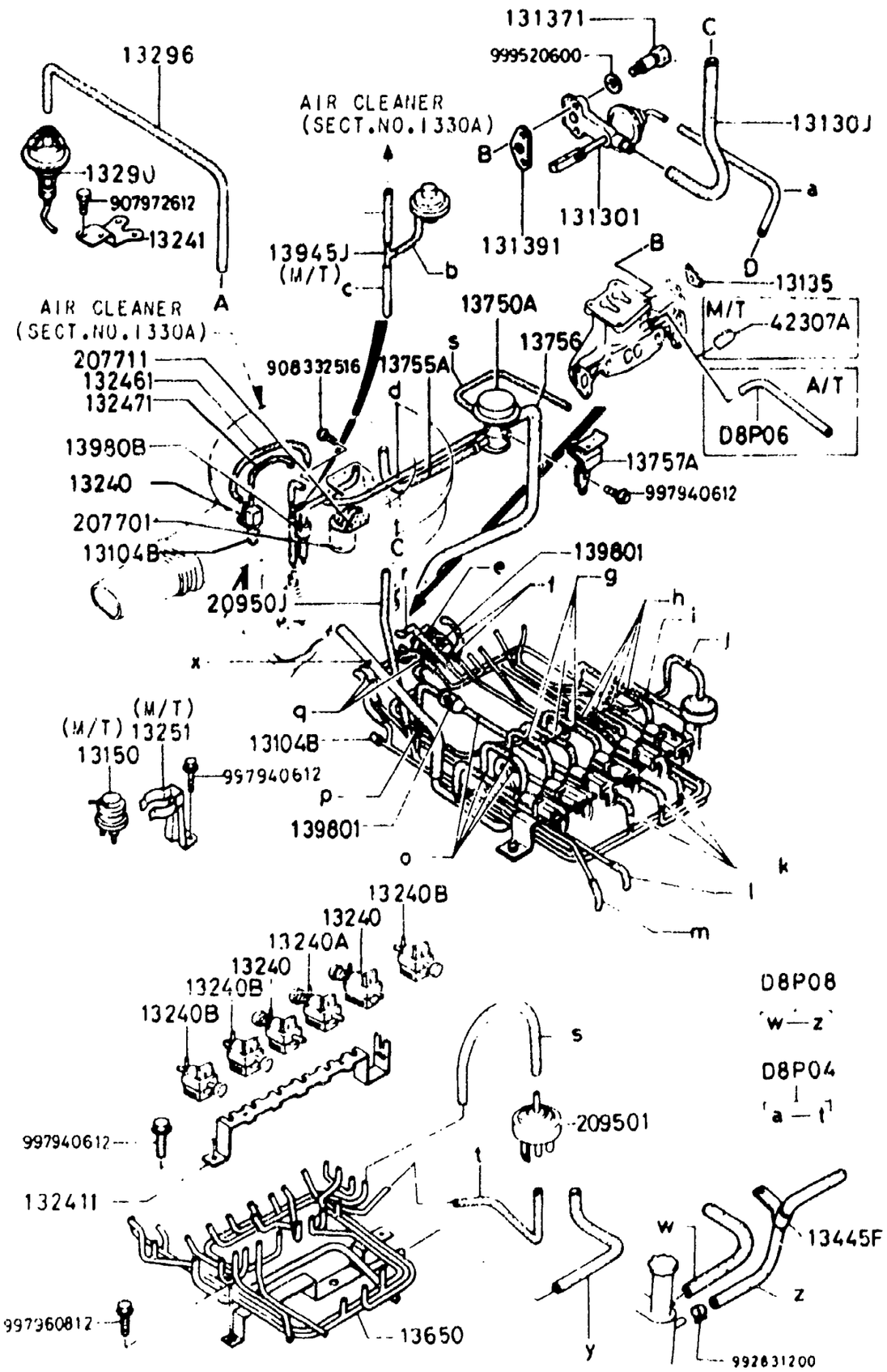

ITEM NO	D-CODE	DESCRIPTION	PART NO	QTY	MODEL/DESCRIPTION	REMARKS
	13 104B	CAP	1010-13-104	3		
	13 1301	DIAPHRAGM, SHUTTER VALVE	N238-13-130	1	(COASTING VALVE)	
	13 130J	HOSE, AIR	1480-13-727A	1		
	13 135	GASKET	N249-13-135A	1	M/T	
			N250-13-135	1	A/T	
	13 1371	BOLT, REAMER	1480-13-137A	2		
	13 1391	GASKET, SHUTTER VALVE	1480-13-139B	1	(COASTING VALVE)	
	13 150	SWITCH, VACUUM	N249-13-150	1	M T	
	13 240	VALVE, THREE-WAY	1480-13-240A	3	(MAIN AIR BLEED, SWITCHING, & RELIEF SOLENOID VALVE)	
	13 240A	VALVE, THREE-WAY	1481-13-240A	1	(SHUTTER SOLENOID VALVE)	
	13 240B	VALVE, THREE-WAY	1482-13-240A	3	(LEADING, TRAILING, & A.C. SOLENOID VALVE)	
	13 241	BRACKET, ACTUATOR	8871-13-291A	1		
	13 2411	BRACKET	N225-13-241A	1		
	13 2461	HOSE, VACUUM	N249-13-246A	1		
	13 2471	HOSE, VACUUM	N249-13-247A	1		
	13 251	BRACKET	N249-13-255	1	M T	
	13 290	ACTUATOR	3648-13-290	1	(THROTTLE OPENER)	
	13 296	HOSE, AIR	8871-13-296B	1		
	13 445F	CLIP	1480-13-445	1		
	13 650	PIPE, VACUUM	N249-13-650B	1		
	13 750A	VALVE, A.A	N201-13-750	1	(ANTI-AFTERBURN VALVE NO 1)	
	13 755A	HOSE, AIR	N201-13-755	1		
	13 756	HOSE, AIR	N201-13-756	1		
	13 757A	BRACKET	N201-13-757A	1		
	13 945J	TUBE VACUUM	1700-13-945A	1	M T	
	13 980J	VALVE, DELAY	8574-20-309	2	(RELIEF SWITCHING VALVE)	
	13 980B	VALVE DELAY	N231-13-980	1		
	20 7701	VALVE, ALTITUDE COMPENSATOR	N249-20-770	1		
	20 7711	GASKET	N201-20-771	1		
	20 9501	VALVE, PURGE	1480-20-950A	1		
	20 950J	HOSE AIR	N249-13-785A	1		
	42 307A	CAP	0223-42-307	1	M T	
	D8 P04	HOSE AIR	9935 10-4999		BULK QTY	
	D8 P06	HOSE AIR	9935-10-6999		A T BULK QTY	
	D8 P08	HOSE AIR	9935-10-8999		BULK QTY	

SECTION INDEX -- ENGINE

STARTING LOCATION	SECT NO.	SECTION NAME
1 - C 3	1000A	SHORT ENGINE & GASKET SETS
1 - D 3	1030A	ROTOR HOUSING
1 - E 3	1040A	OIL PAN, FRONT & REAR HOUSING
1 - G 3	1100A	ECCENTRIC SHAFT & FLYWHEEL
1 - H 3	1110A	ROTOR & RELATED
1 - I 3	1300A	INTAKE MANIFOLD (12A) (S,GS,GSL)
1 - J 3	1300AA	INTAKE MANIFOLD (13B) (GSL-SE)
1 - K 3	1310A	EXHAUST MANIFOLD (12A) (S,GS,GSL)
1 - L 3	1310AA	EXHAUST MANIFOLD (13B) (GSL-SE)
1 - M 3	1320A	FUEL SYSTEM (12A) (S,GS,GSL)
1 - C 4	1320AA	FUEL SYSTEM (13B) (GSL-SE)
1 - E 4	1330A	AIR CLEANER (12A) (S,GS,GSL)
1 - F 4	1330AA	AIR CLEANER (13B) (GSL-SE)
1 - G 4	1350A	STARTING ASSIST SYSTEM (12A) (S,GS,GSL) (FEDERAL ONLY)
1 - H 4	1350AA	STARTING ASSIST SYSTEM (13B) (GSL-SE) (FEDERAL ONLY)
1 - I 4	1359A	CARBURETOR & REPAIR KIT (12A) (S,GS,GSL)
1 - J 4	1360A	CARBURETOR COMPONENTS (12A) (S,GS,GSL)
1 - L 4	1371A	AIR PUMP & AIR CONTROL VALVE (12A) (S,GS,GSL)
1 - M 4	1371AA	AIR PUMP & AIR CONTROL VALVE (13B) (GSL-SE)
1 - N 4	1380A	EMISSION CONTROLS (12A) (S,GS,GSL)
1 - C 5	1380AA	EXHAUST SIDE EMISSION CONTROLS (13B) (GSL-SE)
1 - E 5	1400A	OIL PUMP & FILTER (12A) (S,GS,GSL)
1 - F 5	1400AA	OIL PUMP & FILTER (13B) (GSL-SE)
1 - H 5	1500A	COOLING SYSTEM (12A) (S GS,GSL)
1 - I 5	1500AA	COOLING SYSTEM (13B) (GSL-SE)
1 - K 5	1580A	COMPRESSOR BRACKET PULLEY & BELT
1 - L 5	1600A	CLUTCH DISC & COVER
1 - M 5	1700A	TRANSMISSION CASE (MANUAL)
1 - C 6	1710A	TRANSMISSION GEARS (MANUAL)
1 - G 6	1720A	CHANGE CONTROLS (MANUAL)
1 - H 6	1800A	ENGINE ELECTRICAL SYSTEM
1 - I 6	1820A	DISTRIBUTOR
1 - J 6	1830A	ALTERNATOR
1 - K 6	1840A	STARTER
1 - M 6	1850A	BATTERY & CABLES
1 - N 6	1910A	TORQUE, CONVERTER, OIL PUMP & PIPING (AUTOMATIC)
1 - C 7	1920A	TRANSMISSION CASE & MAIN CONTROLS (AUTOMATIC)
1 - E 7	1930A	CLUTCH & PLANETARY GEAR (AUTOMATIC)
1 - G 7	1940A	LOW, REVERSE & GOVERNOR (AUTOMATIC)
1 - H 7	1950A	MANUAL LINKAGE (AUTOMATIC
1 - I 7	1960A	GASKET & SEAL KIT (AUTOMATIC)

1380AA-1 EXHAUST SIDE EMISSION CONTROLS (13B) (GSL-SE)

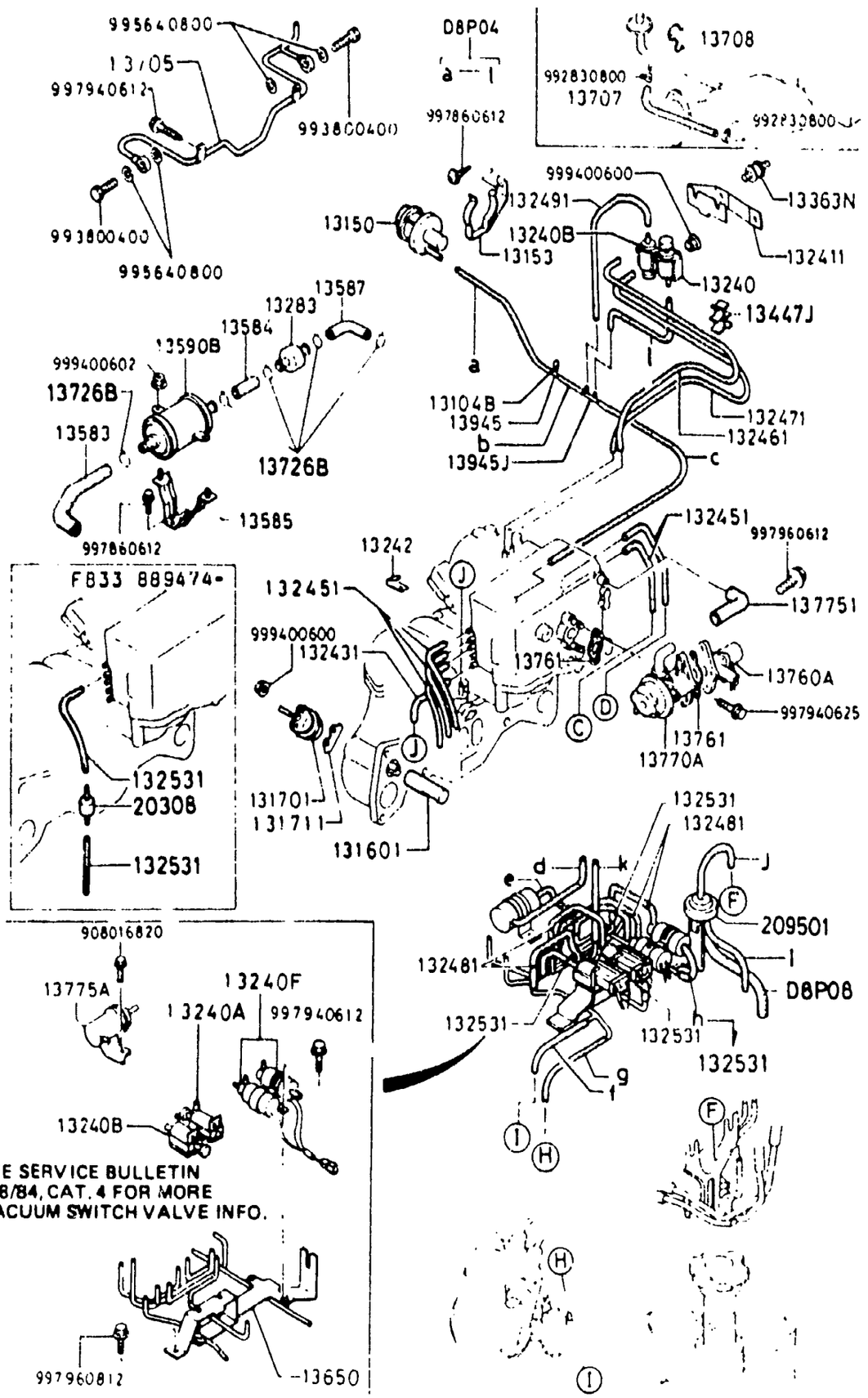

ITEM NO.	D-CODE	DESCRIPTION	PART NO.	QTY	MODEL/DESCRIPTION	REMARKS
	13 104B	CAP	1010-13-104	1	THRU MAR '84 PROD.	FB33* ..800001-829421
	13 150	SWITCH, VACUUM	N304-13-150A	1		
	13 153	BRACKET	N304-13-155	1		
	13 1601	VALVE, VARIABLE PORT	N225-13-160A	2	(AUX. PORT VALVE)	
	13 1701	ACTUATOR, V.P.V.	N304-13-170	2		
	13 1711	GASKET	N225-13-171	2		
	13 240	VALVE, THREE-WAY	N305-13-240A	1	(SWITCHING SOLENOID VALVE)	
	13 240A	VALVE, THREE-WAY	1481-13-240A	1	(PRESSURE REGULATOR CONTROL SOLENOID)	
	13 240B	VALVE, THREE-WAY	1482-13-240A	2	(RELIEF/VACUUM CONTROL SOLENOID)	
	13 240F	VALVE, VACUUM SW.	N304-13-240	1	(VACUUM SOLENOID VALVE)	
	13 2411	BRACKET	N304-13-241B	1		
	13 242	CLIP, AIR HOSE	N304-13-242	1		
	13 2431	HOSE, VACUUM	N304-13-243A	1		
	13 2451	HOSE, VACUUM	8AF1-13-SGY	5		
		REFER TO BULL. NO. 011/85 CAT. 4 FOR MORE INFO.				
	13 2461	HOSE, VACUUM	N304-13-246A	1		
	13 2471	HOSE, VACUUM	N304-13-247B	1		
	13 2481	HOSE, VACUUM	N304-13-248A	4		
	13 2491	HOSE, VACUUM	N304-13-249	1		
	13 2531	HOSE, VACUUM	N236-13-253A	3	THRU OCT '83 PROD.	FB33* . 800001-806530
				4	NOV '83-FEB '85 PROD.	FB33* ..806531-889473
				6	FROM MAR. '85 PROD.	FB33* ..889474-
	13 283	CHAMBER, AIR	N304-13-283A	1		
	13 363N	RUBBER, MOUNTING	0222-13-363	2		
	13 447J	CLIP	F801-13-447	1	THRU OCT '83 PROD	FB33* .800001-806530
	13 583	HOSE, AIR	N304-13-583B	1		
	13 584	HOSE, AIR	N304-13-584A	1		
	13 585	BRACKET	N304-13-585B	1		
	13 587	HOSE, AIR	N304-13-587B	1		
	13 590B	SILENCER, RELIEF	N304-13-590A	1	(AIR SILENCER)	
	13 650	PIPE, VACUUM	N304-13-650C	1		
	13 705	PIPE, AIR	N304-13-705B	1		
	13 707	HOSE, AIR	N304-13-707	1		
	13 708	CLIP	N304-13-708A	1		
	13 726B	CLIP, AIR HOSE	N304-13-726	4		
	13 760A	VALVE AIR SUPPLY	N304-13-760B	1		
	13 761	GASKET	N304-13-761A	2		

1330AA-2 EXHAUST SIDE EMISSION CONTROLS (13B) (GSL-SE)

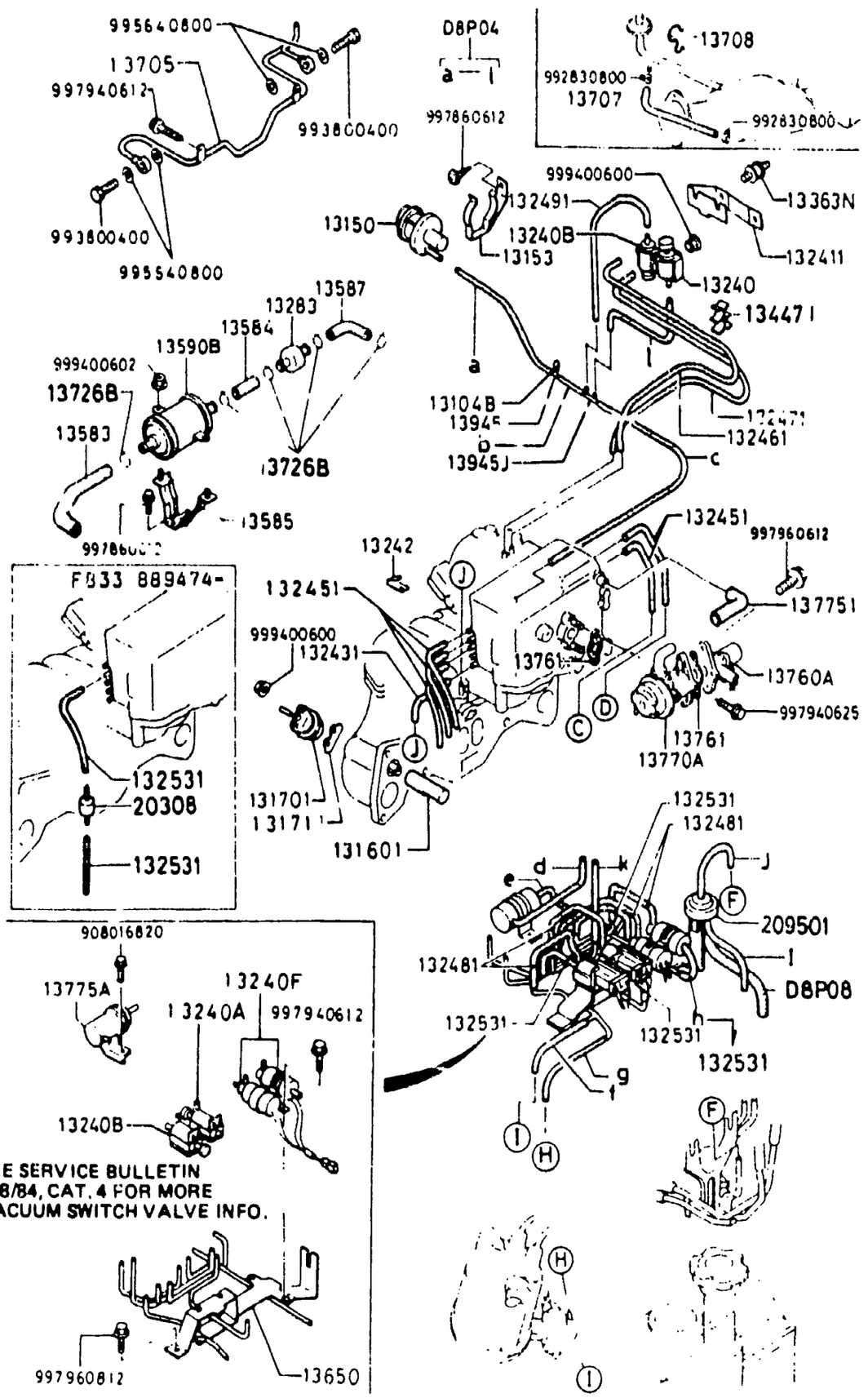

ITEM NO.	D-CODE	DESCRIPTION	PART NO.	QTY	MODEL/DESCRIPTION	REMARKS
	13 770A	VALVE, BY-PASS AIR CONTROL	N304-13-770A	1		
	13 7751	HOSE, AIR	N304-13-772	1		
	13 775A	CHAMBER, VACUUM	N304-13-775B	1		
	13 945	CONNECTOR, TUBE	1700-13-945A	1		
	13 945J	TUBE, VACUUM	8140-13-945	1		
	20 308	FILTER, GAS	N304-20-308	1	FROM FEB '85 PROD.	BF33* ..889474-
	20 9501	VALVE, PURGE	1480-20-950A	1		
	D8 P04	HOSE, AIR	9935-10-4999		BULK QTY	
	D8 P08	HOSF, AIR	9935-10-8999		BULK QTY	

1400A-1 OIL PUMP & FILTER (12A) (S,GS,GSL)

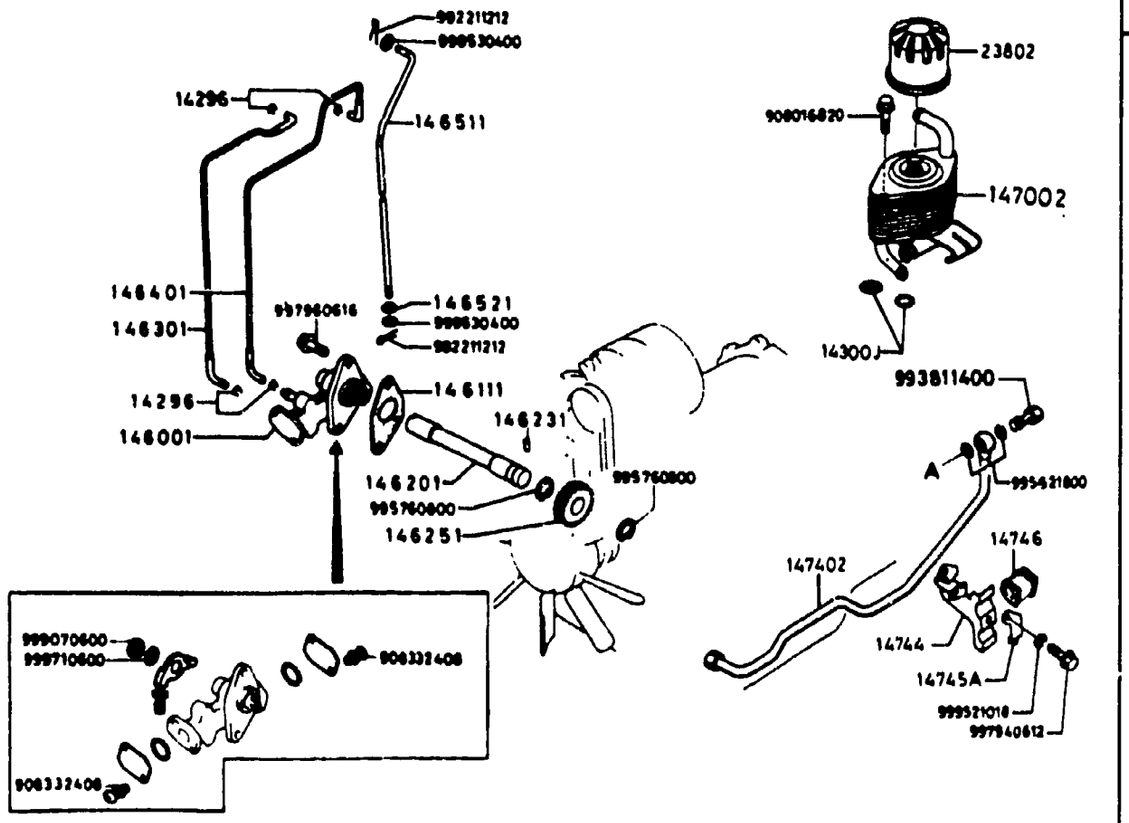

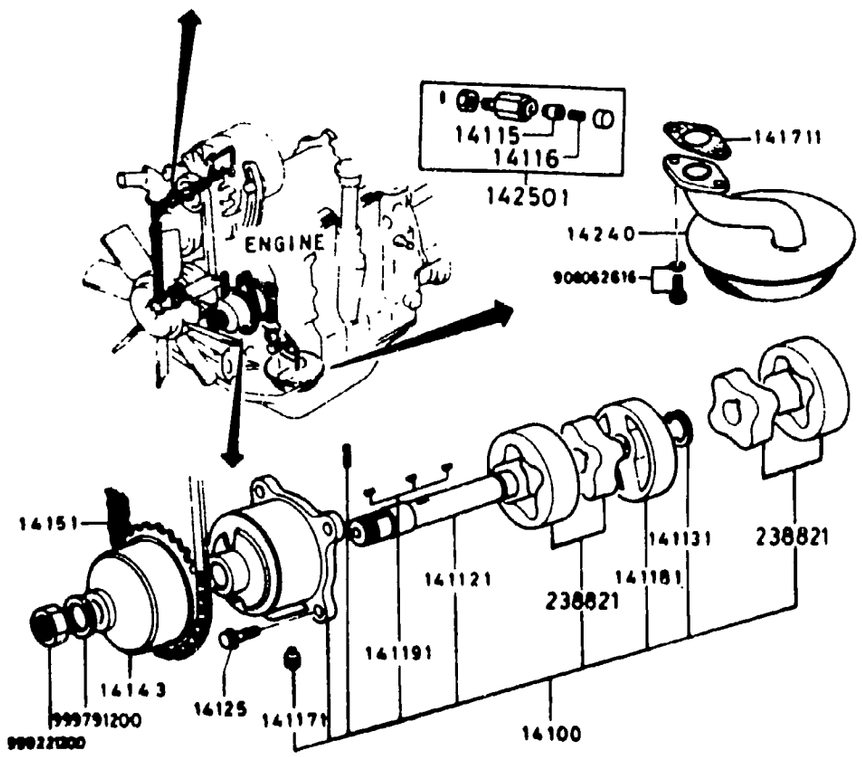

ITEM NO.	D-CODE	DESCRIPTION	PART NO.	QTY	MODEL/DESCRIPTION	REMARKS
	14 100	PUMP, OIL	8553-14-100	1		
	14 1121	SHAFT, OIL PUMP	8553-14-112	1		
	14 1131	RING, SNAP	0810-14-113	1		
	14 115	PLUNGER, CONTROL	0221-14-115	1		
	14 116	SPRING, PRESSURE	0221-14-116	1		
	14 1171	BOLT, LOCK	0839-14-117	1		
	14 1181	PLATE, MIDDLE	8553-14-118	1		
	14 1191	KEY	0839-14-119B	3		
	14 125	BOLT, SET	8553-14-125	4		
	14 143	WHEEL, SPROCKET	0839-14-141A	1		
	14 151	CHAIN, OIL PUMP	0839-14-142	1		
	14 1711	GASKET, OIL STRAINER	0810-14-171A	4		
	14 240	STRAINER, OIL	8871-14-160	1		
	14 2501	REGULATOR, PRESSURE	3648-14-250	1		
	14 296	CLIP, OIL TUBE	0730-14-296	4		
	14 300J	O-RING	9954-10-1601	2		
	14 6001	PUMP, METERING OIL	N249-14-600	1		
	14 6111	GASKET, METERING OIL	1757-14-611	1		
	14 6201	SHAFT, DRIVEN GEAR	0820-14-620A	1		
	14 6231	PIN, DRIVEN GEAR	0813-14-623	1		
	14 6251	GEAR, DRIVEN	0820-14-625A	1		
	14 6301	TUBE, METERING OIL	8871-14-660B	1		
	14 6401	TUBE, METERING OIL	8871-14-670B	1		
	14 6511	ROD, CONNECTING	N225-14-651	1		
	14 6521	SHIM, ADJUST	1757-14-652	1		
	14 7002	COOLER, OIL	N231-14-700C	1		
	14 7402	PIPE, OIL COOLER	N231-14-720B	1		
	14 744	BRACKET, OIL PIPE	N231-14-744B	1		
	14 745A	CLIP, OIL PIPE	N231-14-745B	1		
	14 746	PROTECTOR	N231-14-746	1		
	23 802	CARTRIDGE, OIL FILTER	N3Y6-14-302	1		
		REFER TO PARTS BULL. NOS. T-1-7 & T-1-8 FOR MORE INFO.				
		<AN>	B6Y1-14-302	1		
	23 8821	ROTOR SET, OIL PUMP	8553-14-110	2		

1400AA-1 OIL PUMP & FILTER (13B) (GSL-SE)

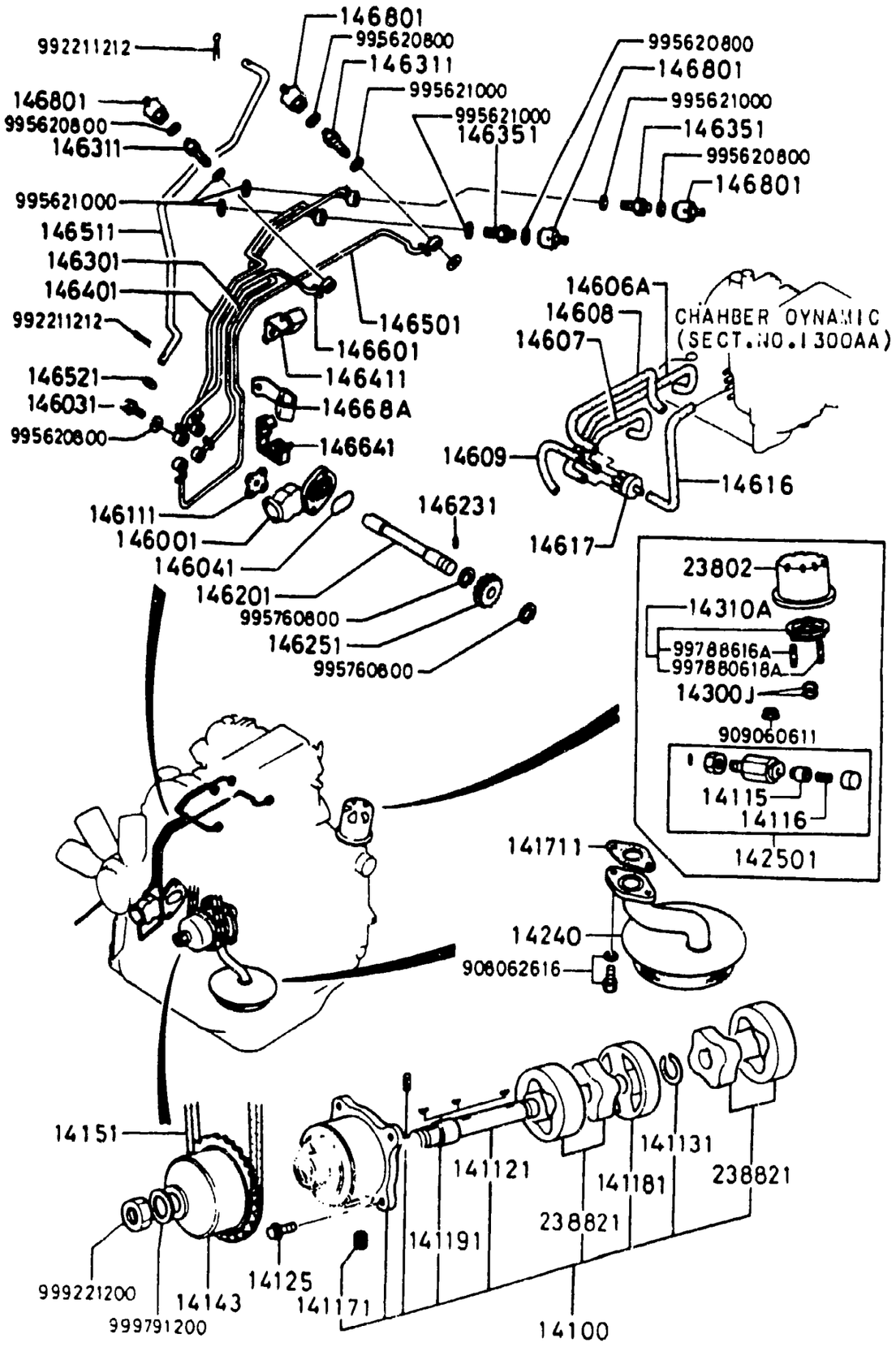

ITEM NO.	D-CODE	DESCRIPTION	PART NO.	QTY	MODEL/DESCRIPTION	REMARKS
	14 100	PUMP, OIL	8553-14-100	1		
	14 1121	SHAFT, OIL PUMP	8553-14-112	1		
	14 1131	RING, SNAP	0810-14-113	1		
	14 115	PLUNGER, CONTROL	0221-14-115	1		
	14 116	SPRING, PRESSURE	0221-14-116	1		
	14 1171	BOLT, LOCK	0839-14-117	1		
	14 1181	PLATE, MIDDLE	8553-14-118	1		
	14 1191	KEY	0839-14-119B	3		
	14 125	BOLT, SET	8553-14-125	4		
	14 143	WHEEL, SPROCKET	0839-14-141A	1		
	14 151	CHAIN, OIL PUMP	0839-14-142	1		
	14 1711	GASKET, OIL STRAINER	0810-14-171A	1		
	14 240	STRAINER, OIL	8871-14-160	1		
	14 2501	REGULATOR, PRESSURE	3648-14-250	1		
	14 300J	O-RING	9954-10-1601	2		
	14 310A	BODY, OIL FILTER	8341-14-310	1		
	14 6001	PUMP, METERING OIL	N246-14-600	1		
	14 6031	BOLT, CONNECTOR	N236-14-603B	4		
	14 6041	O-RING	N236-14-604	1		
	14 606A	TUBE NO. 1, AIR	N304-14-606	1		
	14 607	TUBE NO. 2, AIR	N304-14-607	1		
	14 608	TUBE NO. 3, AIR	N304-14-608	1		
	14 609	TUBE NO. 4, AIR	N304-14-609	1		
	14 6111	GASKET, METERING OIL	N236-14-602A	1		
	14 616	TUBE, AIR INLET	N304-14-616	1		
	14 617	CONNECTOR, AIR TUBE	N304-14-617A	1		
	14 6201	SHAFT, DRIVEN GEAR	0320-14-620A	1		
	14 6231	PIN, DRIVEN GEAR	0813-14-623	1		
	14 6251	GEAR, DRIVEN	0820-14-625A	1		
	14 6301	TUBE, METERING OIL	N304-14-660A	1		
	14 6311	BOLT, CONNECTOR	N304-14-631	2		
	14 6351	BOLT, CONNECTOR	N236-14-635A	2		
	14 6401	TUBE, METERING OIL	N304-14-670A	1		
	14 6411	CLIP, OIL TUBE	N304-14-667C	1		
	14 6501	TUBE, METERING OIL	N304-14-680B	1		
	14 6511	ROD, CONNECTING	N304-14-651C	1		
	14 6521	SHIM, ADJUST	N236-14-652A	1	(T=1.0)	
			N236-14-653	2	(T=0.5)	
	14 6601	TUBE, METERING OIL	N304-14-690A	1		
	14 6641	CLAMP, TUBE	N304-14-664	1	THRU JAN '84 PROD.	FB33* ..800001-819694

1400AA-2 OIL PUMP & FILTER (13B) (GSL-SE)

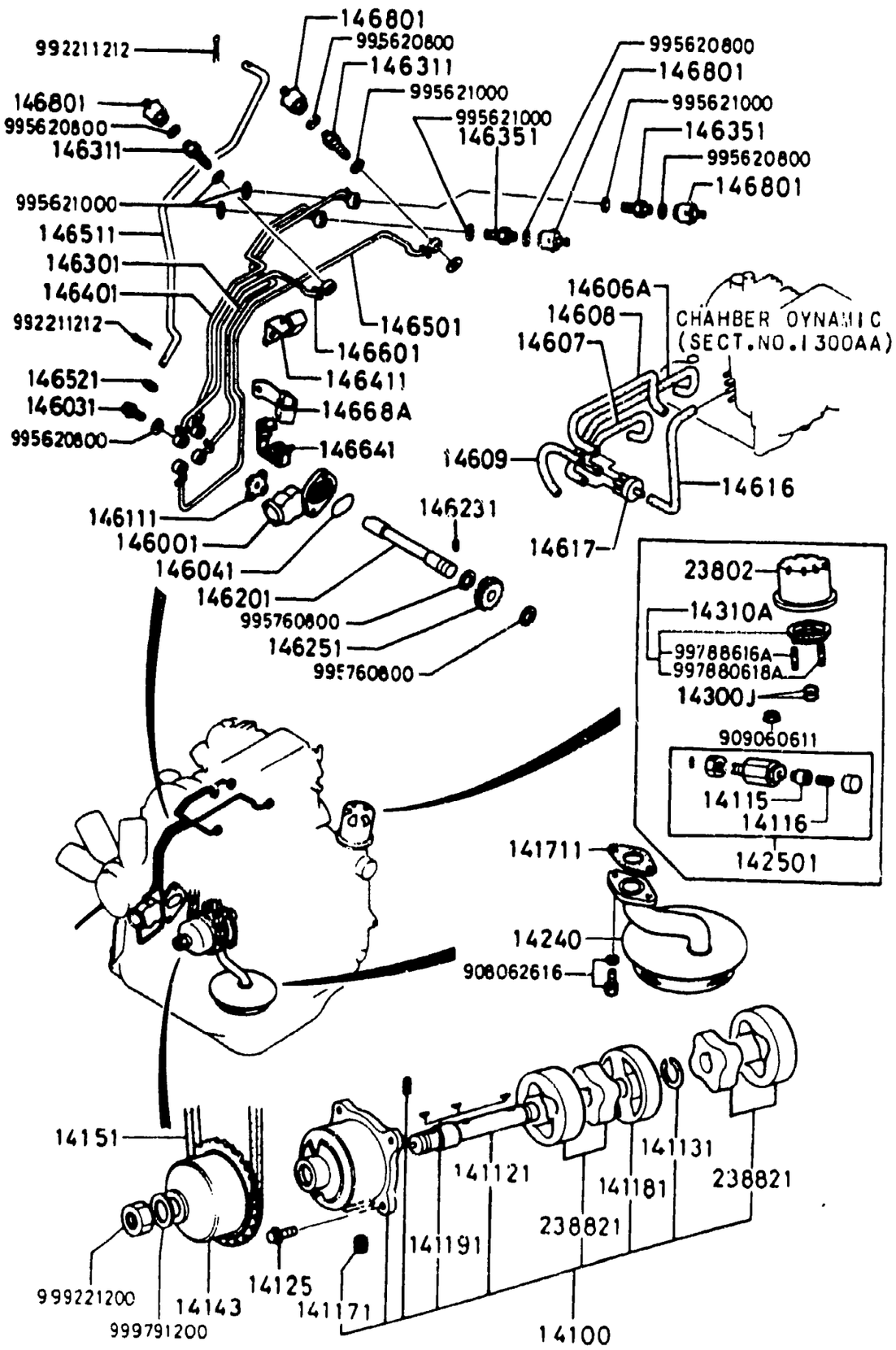

ITEM NO.	D-CODE	DESCRIPTION	PART NO	QTY	MODEL/DESCRIPTION	REMARKS
	14 668A	CLIP, M. OIL TUBE	N304-14-668E	1		
	14 6801	VALVE, CHECK	N236-14-639B	4		
	23 802	CARTRIDGE, OIL FILTER	N3Y6-14-302	1		
		<AN>	B6Y1-14-302	1		
		REFER TO PARTS BULL. NOS. T-1-7 & T-1-8 FOR MORE INFO.				
	23 8821	ROTOR SET, OIL PUMP	8553-14-110	2		

1500A-1 COOLING SYSTEM (12A) (S,GS,GSL)

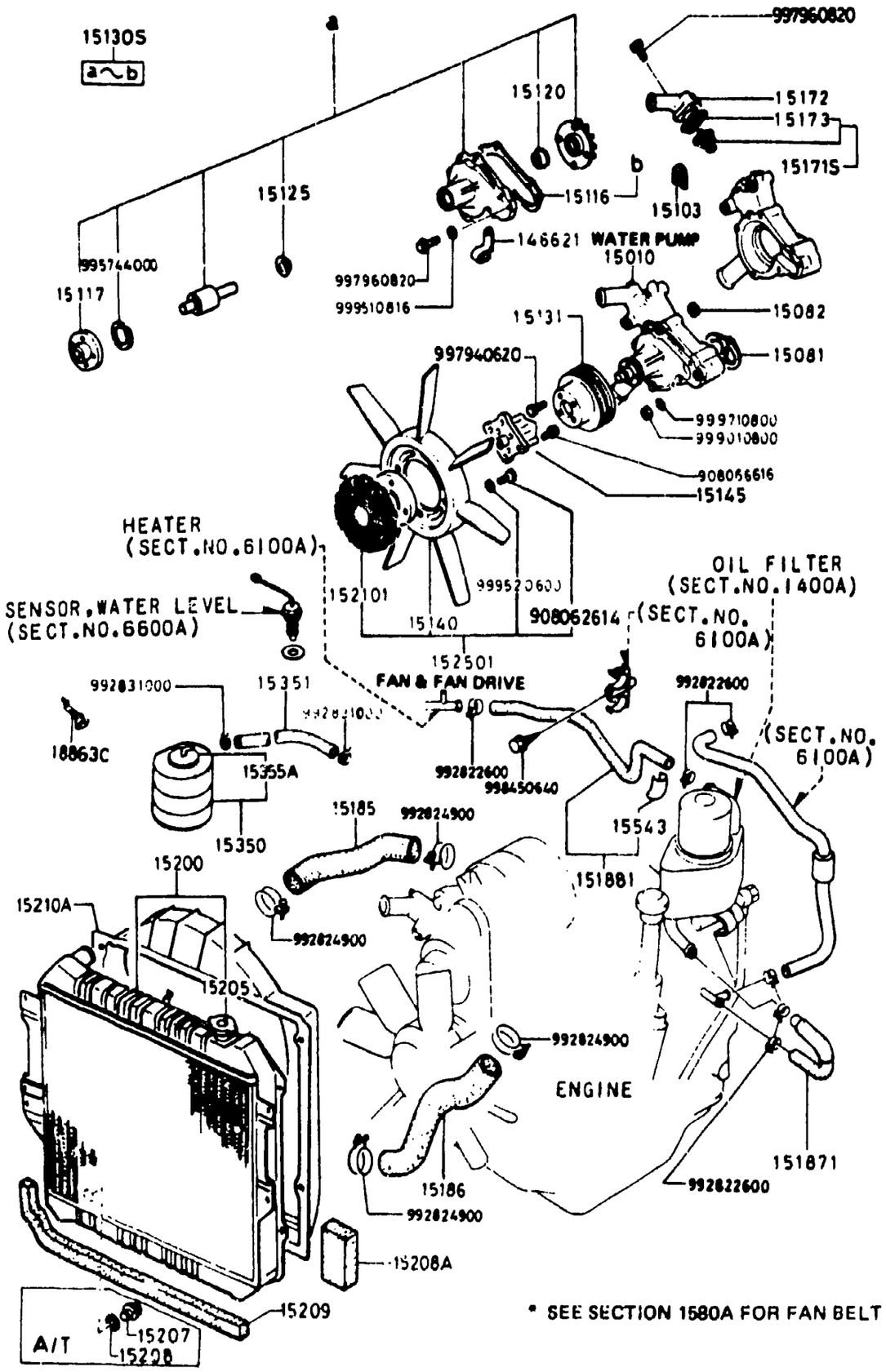

* SEE SECTION 1580A FOR FAN BELT

ITEM NO.	D-CODE	DESCRIPTION	PART NO.	QTY	MODEL/DESCRIPTION	REMARKS
	14 6621	CLIP	3565-14-662A	1		
	15 010	PUMP, WATER	8872-15-0101	1		
	15 081	GASKET	1757-15-105A	1		
	15 082	GASKET	1757-15-106	2		
	15 103	SPACER	8872-15-103	1		
	15 116	GASKET, WATER PUMP	1757-15-132	1		
	15 117	BOSS, WATER PUMP PULLEY	N232-15-152	1		
	15 120	SEAL, WATER	E301-15-120	1		
	15 125	PLATE, WATER BAFFLE	N304-15-125	1		
	15 130S	COVER SET, WATER PUMP	N232-99-153A	1		
	15 131	PULLEY	1757-15-151B	1		
	15 140	FAN, COOLING	N304-15-200	1		
	15 145	SPACER	N249-15-211	1		
	15 171S	THERMOSTAT SET	8553-99-152	1		
	15 172	COVER, THERMOSTAT	8872-15-170A	1		
	15 173	GASKET	1757-15-173	1		
	15 185	HOSE, WATER	N231-15-511	1		
	15 186	HOSE, WATER	N231-15-521C	1		
	15 1871	HOSE, WATER-COOLER	N231-15-530A	1		
	15 1881	HOSE, WATER-COOLER	N231-15-540B	1		
	15 200	RADIATOR	N249-15-310	1	M/T	
			N232-15-310D	1	A/T	
	15 205	CAP, RADIATOR	SE01-15-205	1	A/T THRU JUN '85 PROD.	FB33* ..800001-909987
			F807-15-205	1	A/T FROM JUL '85 PROD.	FB33* ..909988-
			8871-15-205	1	M/T THRU JUN '85 PROD.	FB33* ..800001-909987
			D316-15-205	1	M/T FROM JUL '85 PROD.	FB33* ..909988
	15 207	COCK, DRAIN	N232-15-317	1	A/T	
	15 208	GASKET, DRAIN COCK	0710-15-204	1	A/T	
	15 208A	SEAL, RADIATOR LWR.	N231-15-331A	1		
	15 209	SEAL, RADIATOR SIDE	N231-15-332A	1		
	15 2101	FAN DRIVE	N249-15-210B	1		
	15 210A	COWLING, RADIATOR	N249-15-401C	1		
	15 2501	FAN & FAN DRIVE	N249-15-250B	1		
	15 350	TANK, SUB	1052-15-350B	1		
	15 351	HOSE, WATER	8871-15-351A	1		
	15 355A	CAP, SUB TANK	1052-15-355A	1		
	15 543	PROTECTOR, WATER HOSE	N231-15-543	1		
	18 863C	CLIP	8156-18-863B	1		

1500AA-1 COOLING SYSTEM (13B) (GSL-SE)

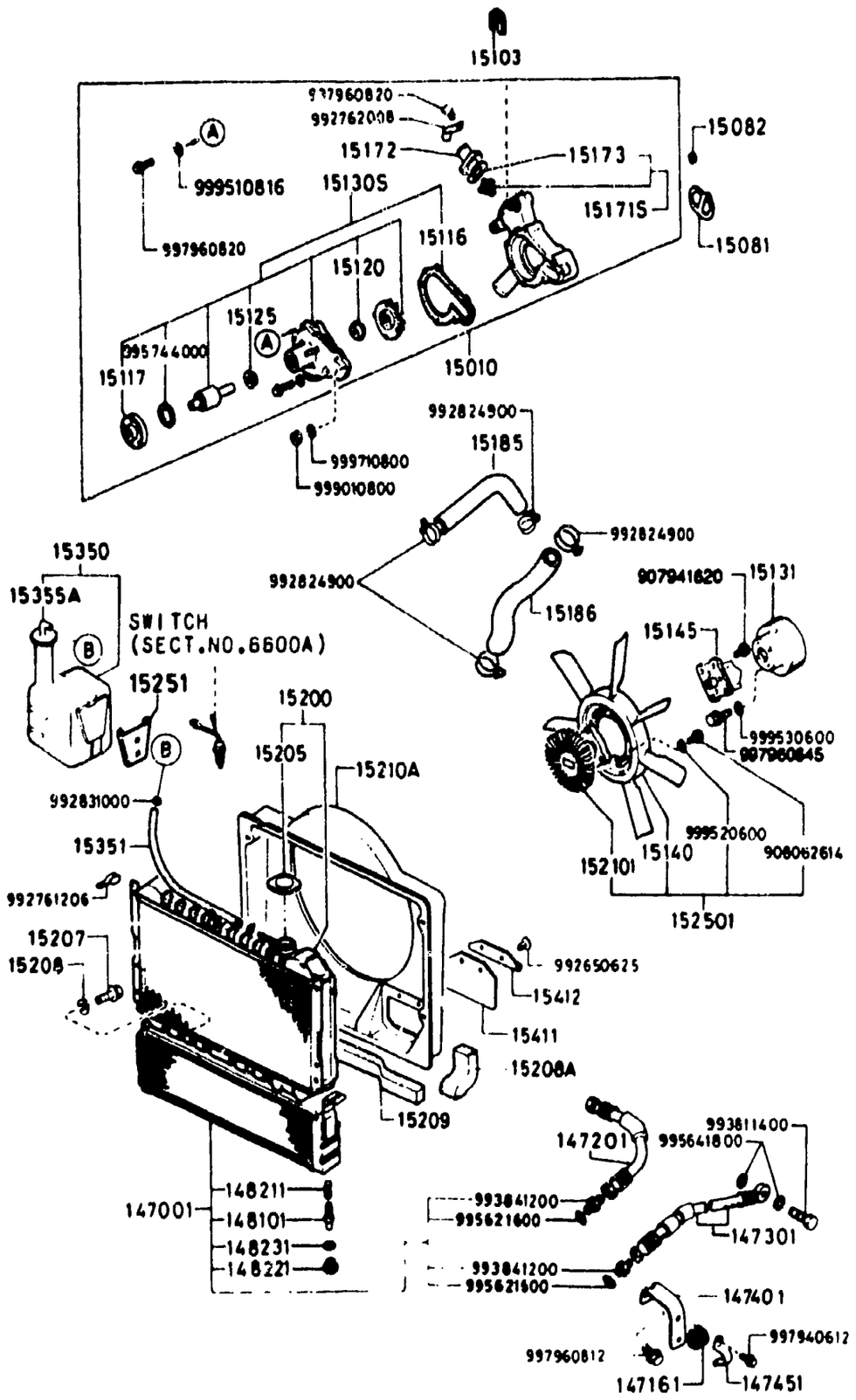

ITEM NO.	D-CODE	DESCRIPTION	PART NO.	QTY	MODEL/DESCRIPTION	REMARKS
	14 7001	COOLER, OIL	N304-14-750D	1		
	14 7161	PROTECTOR, OIL HOSE	0813-14-716	1		
	14 7201	HOSE, OIL	N304-14-720C	1		
	14 7301	HOSE, OIL	N304-14-730C	1		
	14 7401	BRACKET, OIL HOSE	N304-14-740	1		
	14 7451	CLIP, AIR HOSE	0839-14-745A	1		
	14 8101	PELLET, THERMO	8871-14-810	1		
	14 8211	SPRING, PELLET	1757-14-821	1		
	14 8221	NUT, STOPPER	1757-14-822	1		
	14 8231	GASKET	9956-42-200	1		
	15 010	PUMP, WATER	8AF1-15-010	1	W/ GASKET	
	15 081	GASKET	1757-15-105A	1		
	15 082	GASKET	1757-15-106	2		
	15 103	SPACER	N304-15-103	1		
	15 116	GASKET, WATER PUMP	1757-15-132	1		
	15 117	BOSS, WATER PUMP PULLEY	N232-15-152	1		
	15 120	SEAL, WATER	E301-15-120	1		
	15 125	PLATE, WATER BAFFLE	N304-15-125	1		
	15 130S	COVER SET, WATER PUMP	N232-99-153A	1		
	15 131	PULLEY	1757-15-151B	1		
	15 140	FAN, COOLING	N304-15-200	1		
	15 145	SPACER	N249-15-211	1		
	15 171S	THERMOSTAT SET	8553-99-152	1		
	15 172	COVER, THERMOSTAT	N236-15-170	1		
	15 173	GASKET	1757-15-173	1		
	15 185	HOSE, WATER	N304-15-511	1		
	15 186	HOSE, WATER	N304-15-521B	1		
	15 200	RADIATOR	N304-15-310A	1		
	15 205	CAP, RADIATOR	SE01-15-205	1	THRU JUN '85 PROD.	FB33* ..800001-909987
			F807-15-205	1	FROM JUL '85 PROD.	FB33* ..909988-
	15 207	COCK, DRAIN	N232-15-317	1		
	15 208	GASKET, DRAIN COCK	0710-15-204	1		
	15 208A	SEAL, RADIATOR LWR.	N231-15-331A	1		
	15 209	SEAL, RADIATOR SIDE	N231-15-332A	1		
	15 2101	FAN DRIVE	N304-15-210B	1		
	15 210A	COWLING, RADIATOR	N304-15-400D	1		
	15 2501	FAN & FAN DRIVE	N304-15-250B	1		
	15 251	BRACKET, SUB TANK	FA01-56-374	1		
	15 350	TANK, SUB	N304-15-350A	1		
	15 351	HOSE, WATER	0460-15-277	1		

1500AA-2 COOLING SYSTEM (13B) (GSL-SE)

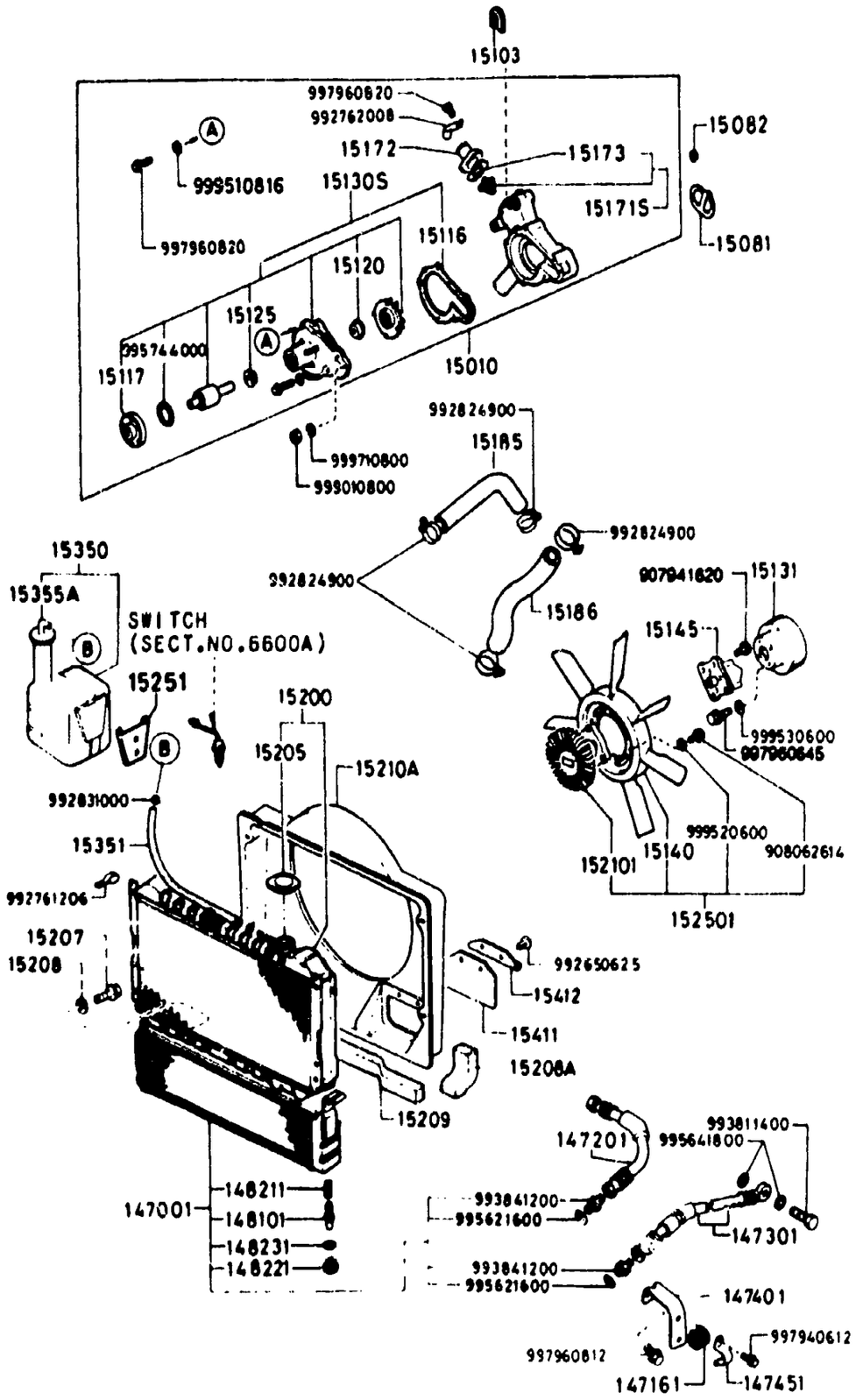

ITEM NO.	D-CODE	DESCRIPTION	PART NO.	QTY	MODEL/DESCRIPTION	REMARKS
	15 355A	CAP, SUB TANK	N304-15-355A	1		
	15 411	FLAP	N304-15-411B	1		
	15 412	HOLDER, FLAP-RAD. SHROUD	N304-15-412A	1		

1580A-1 COMPRESSOR BRACKET, PULLEY & BELT

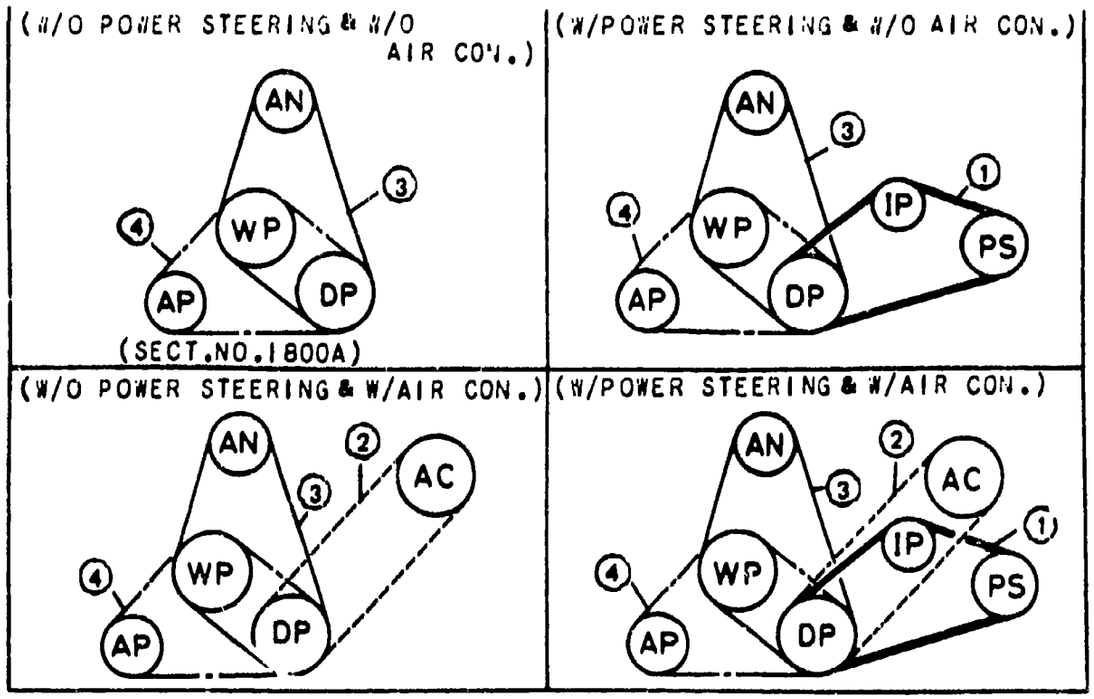

AN	ALTERNATOR
WP	WATER PUMP
AP	AIR PUMP
AC	AIR CON.
IP	IDLE PULLEY
PS	POWER STEERING OIL PUMP
DP	DRIVE PULLEY

	D-CODE	SECT.NO.
(1)	15907	1580A
(2)	15906	1580A
(3)	18381	1800A
(4)	137151	1371A

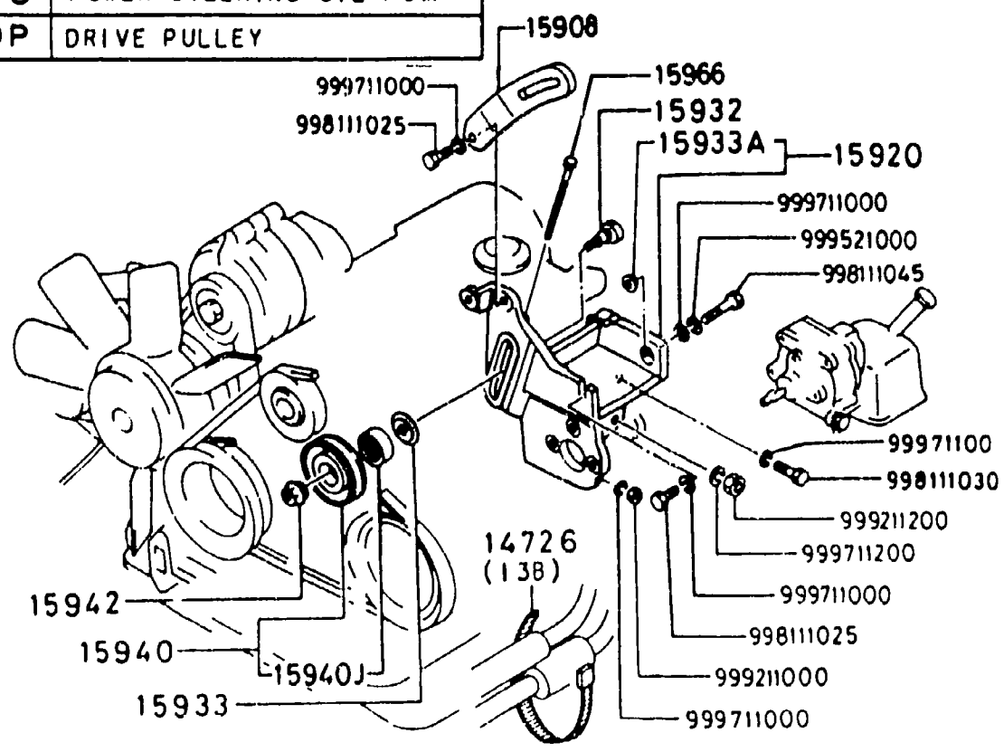

ITEM NO.	D-CODE	DESCRIPTION	PART NO.	QTY	MODEL/DESCRIPTION	REMARKS
4	13 7151	BELT, AIR PUMP	1757-13-715	1	(12A) S, GS, GSL	
4			N304-13-715	1	(13B) GSL-SE	
	14 726	BAND	N304-14-726	1	(W/ P/S) 13B (GSL-SE)	
2	15 906	BELT, COMPRESSOR	0000-68-1111-05	1	(NIPPONDENSO)	
2			0000-67-5409-03	1	(WYNN'S)	
1	15 907	BELT, P/S PUMP	N249-15-907A	1	(W/ OR W/O A/C)	
	15 908	STRAP	N249-15-908B	1		
	15 920	BRACKET, COMPRESSOR	N249-15-925C	1	(W/ P/S)	
	15 932	SHAFT, PULLEY	N249-15-932A	1	(W/ P/S)	
	15 933	COLLAR	N249-15-933	1	(W/ P/S)	
	15 933A	COLLAR	N249-15-927A	1	(W/ P/S)	
	15 940	PULLEY, IDLE	N249-15-940	1	(W/ P/S)	
	15 940J	BEARING	9960-62-203	1	(W/ P/S)	
	15 942	COLLAR	N249-15-942	1	(W/ P/S)	
	15 966	BOLT, ADJUST	1757-15-966	1	(W/ P/S)	
3	18 381	BELT, ALTERNATOR	8311-18-381A	1		

1600A-1 CLUTCH DISC & COVER

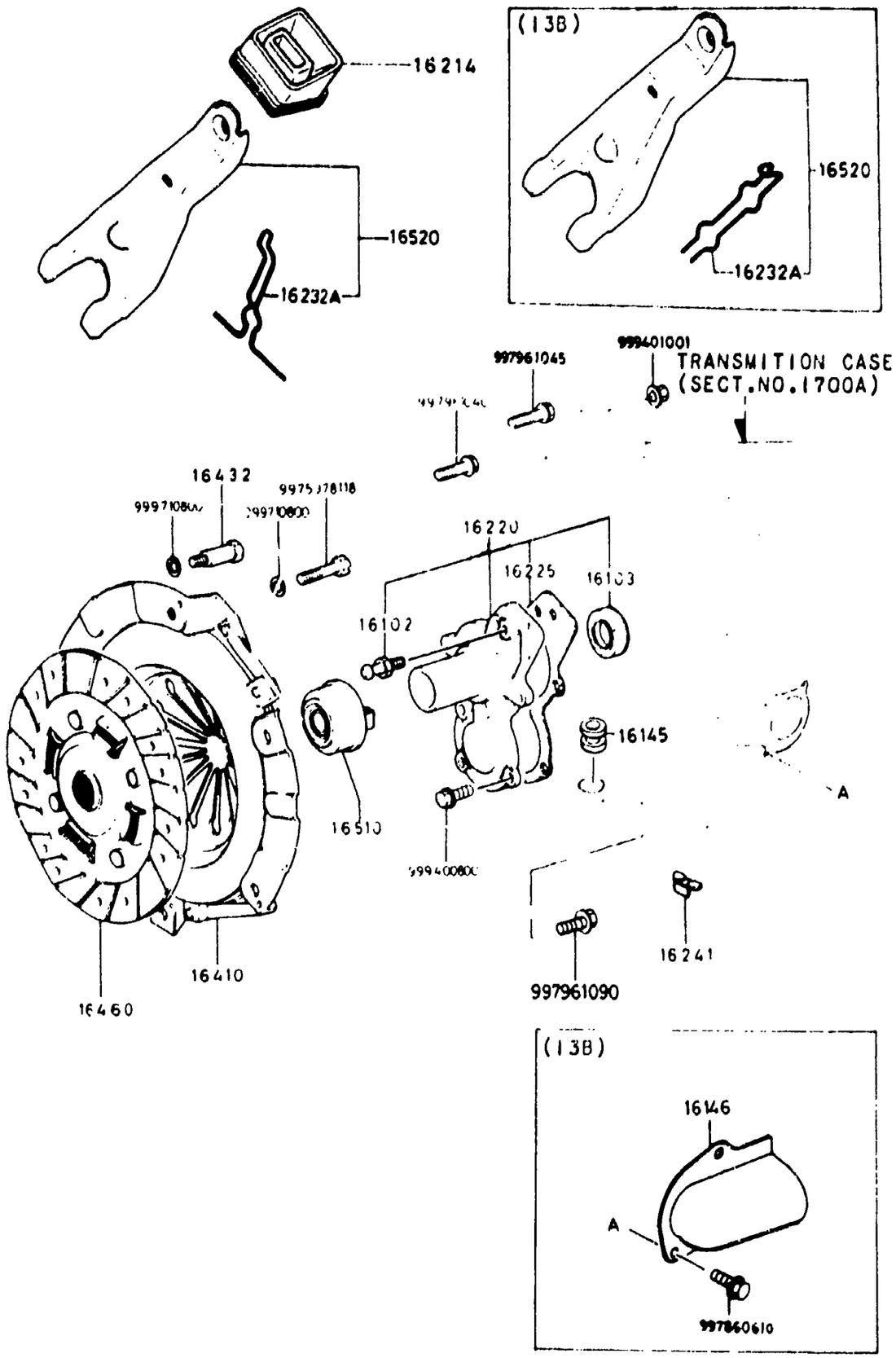

ITEM NO.	D-CODE	DESCRIPTION	PART NO	QTY	MODEL/DESCRIPTION	REMARKS
	16 102	PIN, PIVOT	0603-16-1028	1		
	16 103	SEAL, OIL	0603-16-103	1		
	16 145	RUBBER, SEAL	N204-16-145	1		
	16 146	COVER, VENT	N206-16-150	1	13B (GSL-SE)	
	16 214	COVER, DUST	3975-16-214A	1		
	16 220	COVER, FRONT	8540-16-220D	1	12A (S, GS, GSL)	
			N204-16-220A	1	13B (GSL-SE)	
	16 225	GASKET, FRONT COVER	8540-16-225	1		
	16 232A	SUPPORTER, FORK	0249-16-232	1	12A (S, GS, GSL) THRU OCT. '84 PROD	FB33* ..800001-871510
			1416-16-232A	1	12A (S, GS, GSL) FROM NOV. '84 PROD.	FB33* ..871511-
				1	13B (GSL-SE)	
	16 241	PLUG, BLIND	8540-16-241A	1		
	16 410	COVER, CLUTCH	N203-16-410A	1	12A (S, GS, GSL)	
			N304-16-410	1	13B (GSL-SE)	
	16 432	BOLT, REAMER	0839-16-432	2		
	16 460	DISC, CLUTCH	N203-16-460B	1	12A (S, GS, GSL)	
			N303-16-460	1	13B (GSL-SE)	
	16 510	COLLAR, CLUTCH RELEASE	H606-16-510A	1		
	16 520	FORK, CLUTCH RELEASE	8540-16-520A	1	12A (S, GS, GSL) THRU OCT '84 PROD.	FB33* ..800001-871510
			N204-16-520	1	12A (S, GS, GSL) FROM NOV. '84 PROD.	FB33* ..871511-
				1	13B (GSL-SE)	

1700A-1 TRANSMISSION CASE (MANUAL)

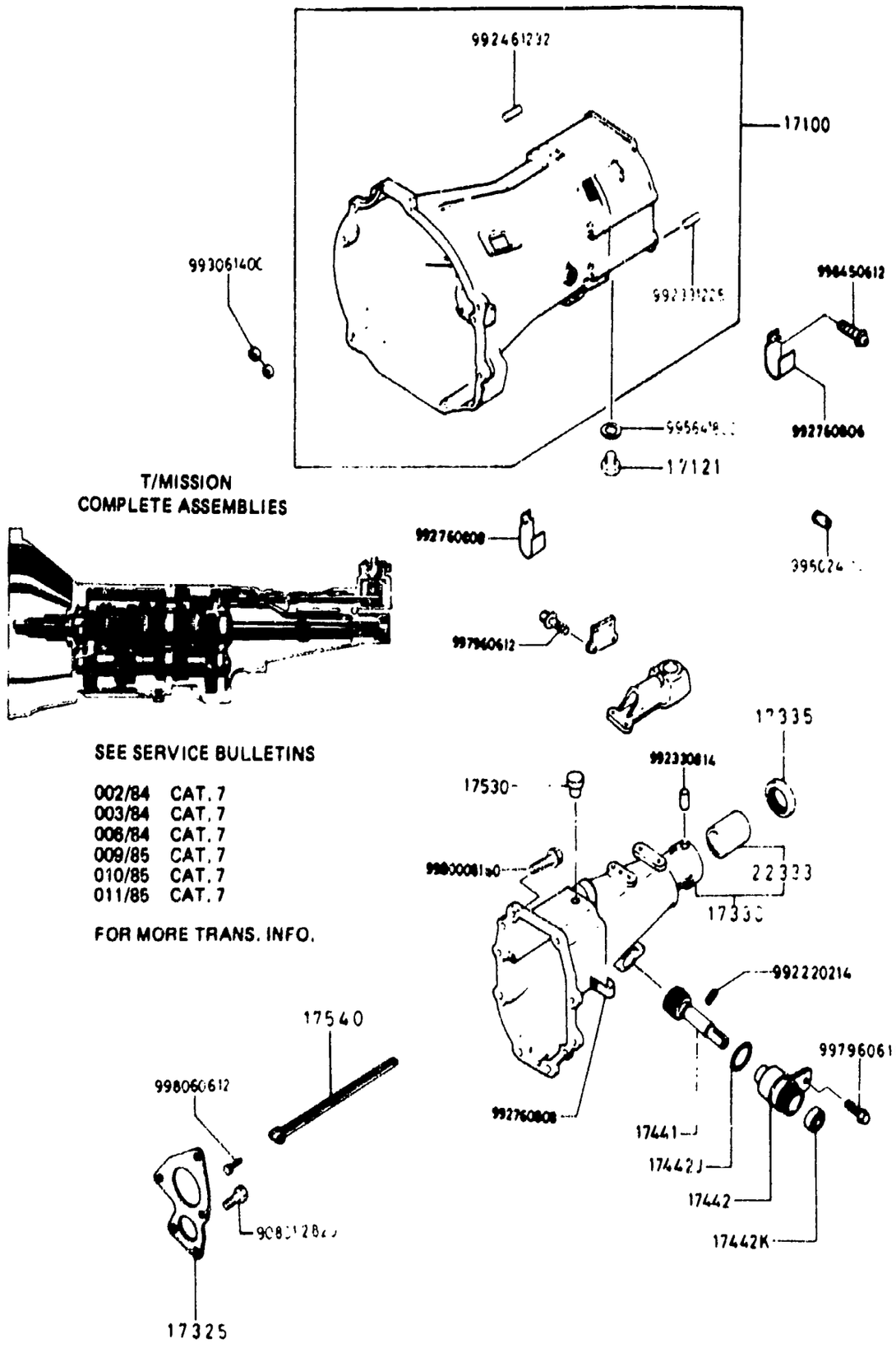

ITEM NO.	D-CODE	DESCRIPTION	PART NO	QTY	MODEL/DESCRIPTION	REMARKS
1		TRANSMISSION, ASSY. COMPLETE	M544-03-000	1	12A (S, GS, GSL)	
1		TRANSMISSION, ASSY COMPLETE	M546-03-000	1	13B (GSL-SE)	
	17 100	CASE, T/MISSION	M503-17-100A	1	12A (S, GS, GSL) THRU NOV. '84 PROD.	FB33* ..800001-874150
			M503-17-100B	1	12A (S, GS, GSL) FROM DEC. '84 PROD	FB33* ..874151-
			M511-17-100A	1	13B (GSL-SE) THRU NOV '84 PROD.	FB33* ..800001-874150
			M511-17-100B	1	13B (GSL-SE) FROM DEC. '84 PROD.	FB33* .874151-
		< A >	M511-17-100C	1		
	17 121	PLUG, MAGNET DRAIN	0810-17-121	1		
	17 325	COVER BEARING	8086-17-326	1		
	17 330	HOUSING, EXTENSION	M503-17-330	1		
	17 335	SEAL, OIL	0437-17-335A	1		
	17 441	GEAR, DRIVEN	8057-17-441C	1		
	17 442	SLEEVE, SPEEDOMETER	1011-17-442A	1		
	17 442J	O-RING	1011-17-443	1		
	17 442K	SEAL, OIL	9958-60-8166	1		
	17 530	BREATHER, AIR	0884-17-530	1		
	17 540	PASS, OIL	M501-17-550A	1		
	22 333	BUSHING	0398-22-330	1		

SECTION INDEX -- ENGINE

STARTING LOCATION	SECT NO.	SECTION NAME
1 - C 3	1000A	SHORT ENGINE & GASKET SETS
1 - D 3	1030A	ROTOR HOUSING
1 - E 3	1040A	OIL PAN, FRONT & REAR HOUSING
1 - G 3	1100A	ECCENTRIC SHAFT & FLYWHEEL
1 - H 3	1110A	ROTOR & RELATED
1 - I 3	1300A	INTAKE MANIFOLD (12A) (S,GS,GSL)
1 - J 3	1300AA	INTAKE MANIFOLD (13B) (GSL-SE)
1 - K 3	1310A	EXHAUST MANIFOLD (12A) (S,GS,GSL)
1 - L 3	1310AA	EXHAUST MANIFOLD (13B) (GSL-SE)
1 - M 3	1320A	FUEL SYSTEM (12A) (S,GS,GSL)
1 - C 4	1320AA	FUEL SYSTEM (13B) (GSL-SE)
1 - E 4	1330A	AIR CLEANER (12A) (S,GS GSL)
1 - F 4	1330AA	AIR CLEANER (13B) (GSL-SE)
1 - G 4	1350A	STARTING ASSIST SYSTEM (12A) (S,GS,GSL) (FEDERAL ONLY)
1 - H 4	1350AA	STARTING ASSIST SYSTEM (13B) (GSL-SE) (FEDERAL ONLY)
1 - I 4	1359A	CARBURETOR & REPAIR KIT (12A) (S,GS,GSL)
1 - J 4	1360A	CARBURETOR COMPONENTS (12A) (S,GS,GSL)
1 - L 4	1371A	AIR PUMP & AIR CONTROL VALVE (12A) (S,GS,GSL)
1 - M 4	1371AA	AIR PUMP & AIR CONTROL VALVE (13B) (GSL-SE)
1 - N 4	1380A	EMISSION CONTROLS (12A) (S,GS,GSL)
1 - C 5	1380AA	EXHAUST SIDE EMISSION CONTROLS (13B) (GSL-SE)
1 - E 5	1400A	OIL PUMP & FILTER (12A) (S,GS,GSL)
1 - F 5	1400AA	OIL PUMP & FILTER (13B) (GSL-SE)
1 - H 5	1500A	COOLING SYSTEM (12A) (S,GS,GSL)
1 - I 5	1500AA	COOLING SYSTEM (13B) (GSL-SE)
1 - K 5	1580A	COMPRESSOR BRACKET, PULLEY & BELT
1 - L 5	1600A	CLUTCH DISC & COVER
1 - M 5	1700A	TRANSMISSION CASE (MANUAL)
1 - C 6	1710A	TRANSMISSION GEARS (MANUAL)
1 - G 6	1720A	CHANGE CONTROLS (MANUAL)
1 - H 6	1800A	ENGINE ELECTRICAL SYSTEM
1 - I 6	1820A	DISTRIBUTOR
1 - J 6	1830A	ALTERNATOR
1 - K 6	1840A	STARTER
1 - M 6	1850A	BATTERY & CABLES
1 - N 6	1910A	TORQUE, CONVERTER, OIL PUMP & PIPING (AUTOMATIC)
1 - C 7	1920A	TRANSMISSION CASE & MAIN CONTROLS (AUTOMATIC)
1 - E 7	1930A	CLUTCH & PLANETARY GEAR (AUTOMATIC)
1 - G 7	1940A	LOW, REVERSE & GOVERNOR (AUTOMATIC)
1 - H 7	1950A	MANUAL LINKAGE (AUTOMATIC
1 - I 7	1960A	GASKET & SEAL KIT (AUTOMATIC)

STARTING LOCATION	SECT. NO.	SECTION NAME

1710A-1 TRANSMISSION GEARS (MANUAL)

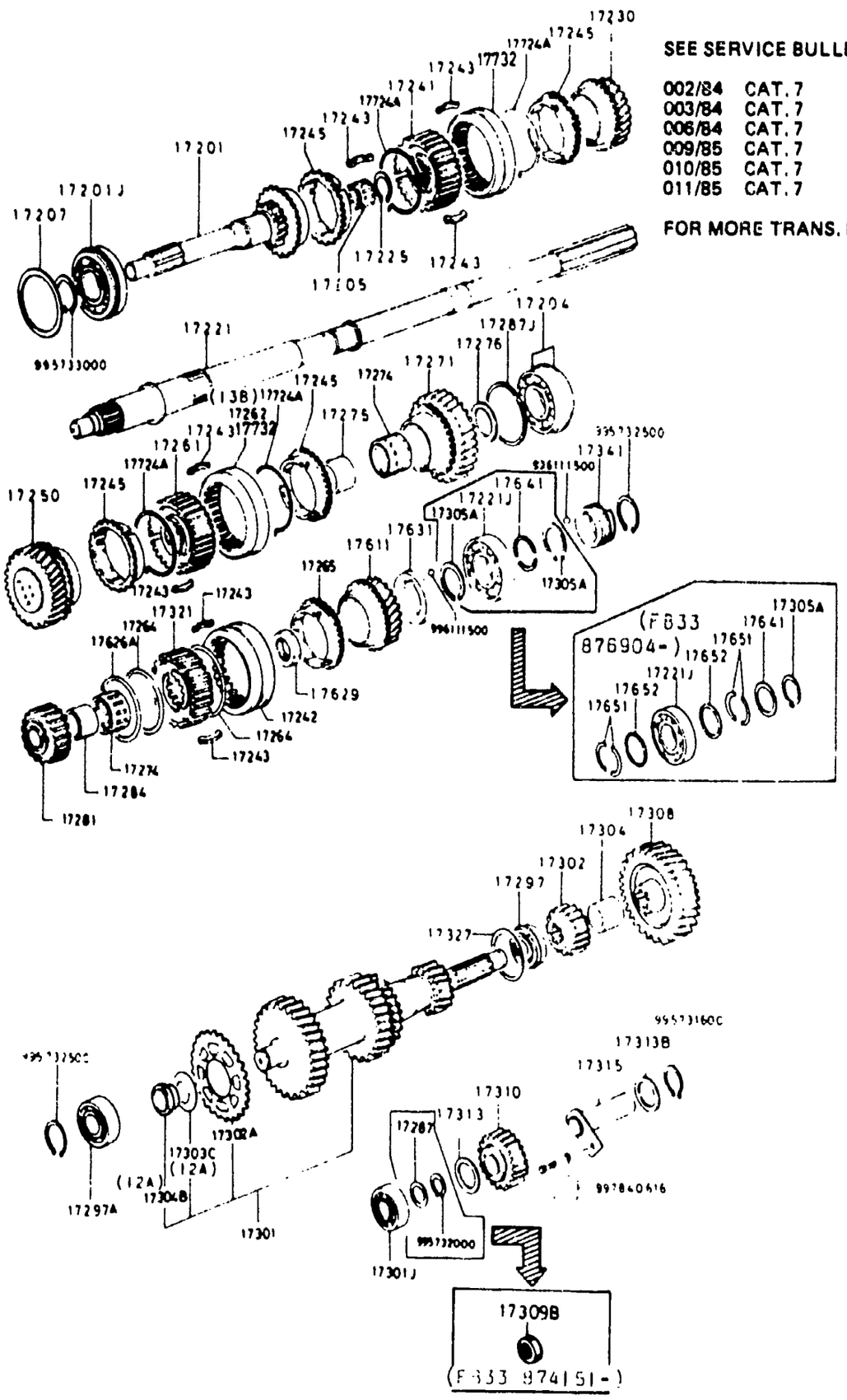

SEE SERVICE BULLETINS

002/84 CAT. 7
003/84 CAT. 7
006/84 CAT. 7
009/85 CAT. 7
010/85 CAT. 7
011/85 CAT. 7

FOR MORE TRANS. INFO.

ITEM NO	D-CODE	DESCRIPTION	PART NO.	QTY	MODEL/DESCRIPTION	REMARKS
	17 201	GEAR, MAIN DRIVE	M506-17-201	1	THRU NOV. '84 PROD.	FB33* ..800001-876903
			M515-17-201A	1	FROM DEC. '84 PROD.	FB33* ..876904-
		REFER TO SERV. BULL. NO. 010 '85 CAT. 7 FOR MORE INFO.				
	17 201J	BEARING, BALL	M502-17-295C	1		
		REFER TO SERV. BULL. NO. 011 '85 CAT. 7 FOR MORE INFO.				
	17 204	BEARING, BALL	M502-17-298A	1		
	17 205	BEARING, ROLLER	0249-17-210B	1	12A (S, GS, GSL) THRU NOV. '84 PROD.	
				1	13B (GSL-SE) THRU NOV. '84 PROD.	FB33* ..815218-876903
			M501-17-210	1	13B (GSL-SE) FROM DEC. '84 PROD.	FB33* ..876904-
	17 207	SHIM, ADJUST	9996-36-315	1	(T=0.15)	
			9996-36-330	1	(T=0.30)	
	17 221	SHAFT, MAIN	M502-17-221	1	12A (S, GS, GSL) THRU SEP. '84 PROD.	FB33* ..800001-866964
			M502-17-221A	1	12A (S, GS, GSL) FROM OCT. '84 PROD.	FB33* ..866965-
			M505-17-221	1	13B (GSL-SE) THRU SEP. '84 PROD.	FB33* ..800001-866964
			M505-17-221A	1	13B (GSL-SE) FROM OCT. '84 PROD.	FB33* ..866965-
	17 221J	BEARING, BALL	M503-17-204	1		
	17 225	RING, SNAP	0317-17-225	1		
	17 230	GEAR, 3RD	M503-17-231C	1		
	17 241	HUB, CLUTCH	M508-17-261A	1	THRU JUN. '85 PROD.	
	17 242	SLEEVE, CLUTCH HUB	F401-17-242A	1		
	17 243	KEY, SYNCHRONIZER	F401-17-243A	9		
	17 245	RING, SYNCHRONZIER	M501-17-245	4		
	17 250	GEAR, 2ND	M503 17-251D	1		
	17 261	HUB, CLUTCH	M509-17-261A	1		
	17 262	SLEEVE, CLUTCH HUB	M501-17-262B	1	13B (GSL-SE)	
	17 264	SPRING, SYNCHRONIZER KEY	F402-17-264	2		
	17 265	RING, SYNCHRONIZER	F401-17-265A	1		
	17 271	GEAR, 1ST	M501-17-271	1	12A (S, GS, GSL)	
			M506-17-271B	1	13B (GSL-SE)	
	17 274	BEARING, NEEDLE	4069-17-283A	2		
	17 275	RACE, INNER	8540-17-275A	1		
	17 276	WASHER, THRUST	0259-17-274A	2	(T=3.0)	
			0259-17-276	2	(T=2.2)	
			0259-17-277	2	(T=2.7)	
			0259-17-278	2	(T=3.2)	

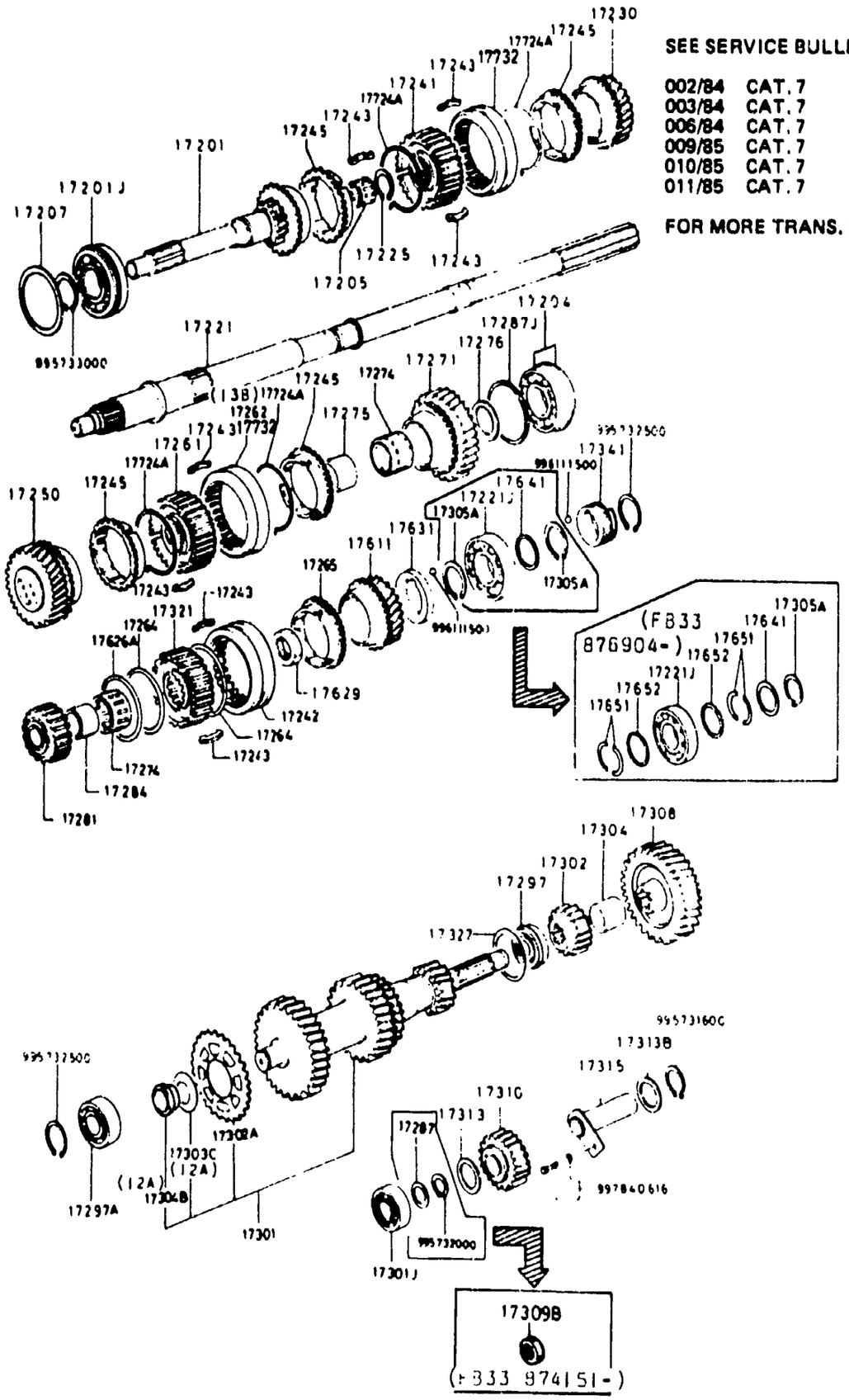

SEE SERVICE BULLETINS

002/84 CAT. 7
003/84 CAT. 7
006/84 CAT. 7
009/85 CAT. 7
010/85 CAT. 7
011/85 CAT. 7

FOR MORE TRANS. INFO.

ITEM NO.	D-CODE	DESCRIPTION	PART NO.	QTY	MODEL/DESCRIPTION	REMARKS
	17 276 (CONT'D)		0259-17-279	2	(T=3.7)	
	17 281	GEAR, REVERSE	M501-17-281B	1		
	17 284	RACE, INNER	4069-17-284E	1		
	17 287	SHIM, ADJUST	0419-17-288	1	(T=2.1)	FB33* ..800001-874150
			0419-17-291	1	(T=2.2)	FB33* ..800001-874150
			0419-17-292	1	(T=2.3)	FB33* ..800001-874150
			0419-17-293	1	(T=2.4)	BF33* ..800001-874150
	17 287J	SHIM, ADJUST	9996-36-310	1	(T=0 1)	FB33* ..800001-874150
			9996-36-330	1	(T=0 3)	
	17 297	BEARING, BALL	R502-17-306A	1		
	17 297A	BEARING, BALL	M502-17-297A	1		
	17 301	GEAR, COUNTER SHAFT	M505-17-300C	1	12A (S, GS, GSL)	
			M508-17-301D	1	13B (GSL-SE)	
		REFER TO SERV. BULL. NO. 009/85 CAT. 7 FOR MORE INFO.				
	17 301J	BEARING, BALL	M502-17-299A	1		
	17 302	GEAR, COUNTER REVERSE	8086-17-302C	1		
	17 302A	GEAR, FRICTION	M502-17-302B	1	12A (S, GS, GSL)	
	17 303C	SPRING DIAPHRAGM	M501-17-303	1	12A (S, GS, GSL)	
	17 304	SPACER	8086-17-304A	1		
		<A>	M504-17-304	1		
	17 304B	SPACER	M501-17-304C	1	12A (S, GS, GSL)	
	17 305A	RING, RETAINING	0839-17-305B	2		
	17 308	GEAR, COUNTER	M505-17-308	1	12A (S, GS, GSL)	
			M502-17-308A	1	13B (GSL-SE) THRU MAY '84 PROD.	FB33* .800001-850000
			M504-17-308	1	13B (GSL-SE) FROM JUNE '84 PROD.	FB33* ..8500001-
		REFER TO SERV. BULL. NO. 006/84 CAT. 7 FOR MORE INFO.				
		<C>	M507-17-308	1	REQUIRES GEAR: M512-17-611	
	17 309B	NUT, LOCK-COUNTER SHAFT BRG.	M501-17-309	1	FROM NOV. '84 PROD.	FB33* ..874151
	17 310	GEAR, REVERSE IDLE	8086-17-310C	1	12A (S, GS, GSL)	
			M504-17-310C	1	13B (GSL-SE)	
	17 313	WASHER, THRUST	M501-17-313	1		
	17 313B	WASHER, THRUST	4077-17-316	1	(T=2.6)	
			4077-17-314A	1	(T=2 8)	
			4077-17-315A	1	(T=3.0)	
	17 315	SHAFT, REV IDLE GEAR	8086-17-140A	1		
	17 321	HUB, CLUTCH	M510-17-261	1		

1710A-3 TRANSMISSION GEARS (MANUAL)

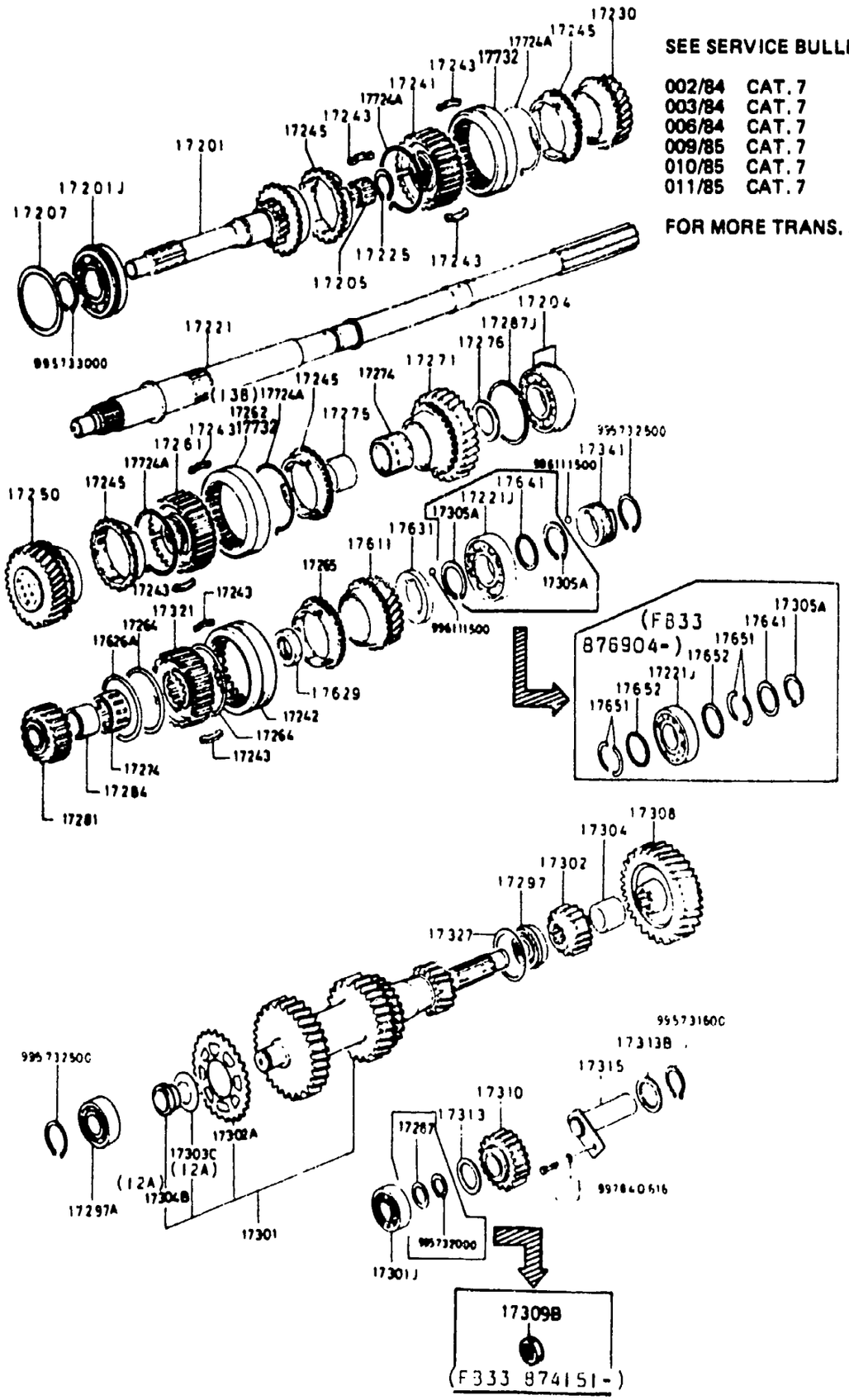

SEE SERVICE BULLETINS

002/84 CAT. 7
003/84 CAT. 7
006/84 CAT. 7
009/85 CAT. 7
010/85 CAT. 7
011/85 CAT. 7

FOR MORE TRANS. INFO.

ITEM NO.	D-CODE	DESCRIPTION	PART NO.	QTY	MODEL/DESCRIPTION	REMARKS
	17 327	SHIM, ADJUST	0305-17-327	2	(T=0.1)	
			0305-17-328	2	(T=0.3)	
	17 341	GEAR, DRIVE	3728-17-341A	1		
	17 611	GEAR, OVER TOP	M502-17-611A	1	12A (S, GS, GSL)	
			M510-17-611	1	13B (GSL-SE) THRU JUN. '84 PROD.	FB33* ...800001-850000
			M509-17-611	1	13B (GSL-SE) FROM JUL. '84 PROD.	FB33* ...850001-
		<C>	M512-17-611	1	REQUIRES GEAR: M507-17-308	
	17 626A	RING, RETAINING	3648-17-626	1		
	17 629	NUT, LOCK	8601-17-629	1		
	17 631	WASHER, THRUST LOCK	0884-17-632A	1	(T=6.2) THRU NOV. '84 PROD.	FB33* ..800001-876903
			0884-17-632B	1	(T=6.2) FROM DEC. '84 PROD.	FB33* ..876904-
			0884-17-633A	1	(T=6.4) THRU NOV. '84 PROD.	FB33* ..800001-876903
			0884-17-633B	1	(T=6.4) FROM DEC. '84 PROD.	FB33* ..876904-
			0884-17-634A	1	(T=6.5) THRU NOV. '84 PROD.	FB33* ..800001-876903
			0884-17-634B	1	(T=6.5) FROM DEC. '84 PROD.	FB33* ..876904-
			0884-17-635A	1	(T=6.6) THRU NOV. '84 PROD.	FB33* ..800001-876903
			0884-17-635B	1	(T=6.6) FROM DEC. '84 PROD.	BF33* ..876904-
	17 641	WASHER, ADJUST	0862-17-641A	1	12A (S, GS, GSL) (T=1.9)	
				1	13B (GSL-SE) THRU NOV. '84 PROD.	FB33* ..800001-876903
			0862-17-642A	1	12A (S, GS, GSL) (T=2.0)	
				1	13B (GSL-SE) THRU NOV. '84 PROD.	FB33* ..800001-876903
			0862-17-643A	1	12A (S, GS, GSL) (T=2.1)	
				1	13B (GSL-SE) THRU NOV. '84 PROD.	FB33* .800001-876903
			0862-17-644A	1	12A (S, GS, GSL) (T=2.2)	
				1	13B (GSL-SE) THRU NOV. '84 PROD.	FB33* ..800001-876903
			M501-17-655	2	13B (GSL-SE) (T=2.9MM) FROM DEC. '84 PROD.	FB33* ..876904-
			M501-17-653	2	13B (GSL-SE) (T=3.1MM) FROM DEC. '84 PROD.	FB33* ..876904-
			M501-17-654	2	13B (GSL-SE) (T=3.2MM) FROM DEC. '84 PROD.	FB33* ..876904-
	17 651	WASHER, ADJUST	M501-17-651	4	13B (GSL-SE) (T=3MM) FROM DEC. '84 PROD.	FB33* ..876904-

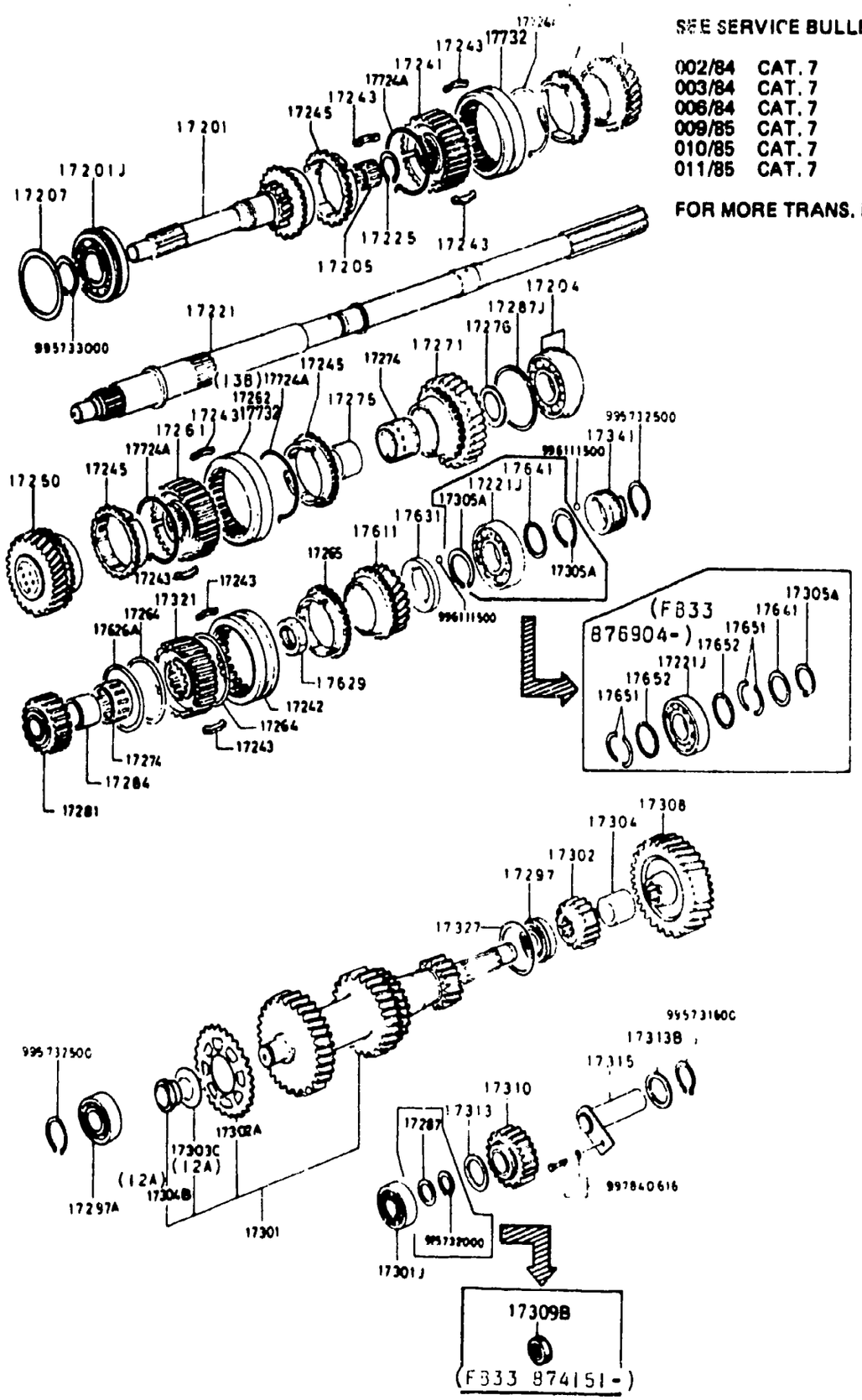

SEE SERVICE BULLETINS

002/84 CAT. 7
003/84 CAT. 7
006/84 CAT. 7
009/85 CAT. 7
010/85 CAT. 7
011/85 CAT. 7

FOR MORE TRANS. INFO.

ITEM NO.	D-CODE	DESCRIPTION	PART NO.	QTY	MODEL/DESCRIPTION	REMARKS
	17 652	RING, THRUST WASHER	M501-17-652	2	13B (GSI SE) (T =2.9MM) FROM DEC. '84 PROD.	FB33* ..876904-
	17 724A	SPRING, SYNCHRONIZER KEY	W501-17-724	4		
	17 732	SLEEVE, CLUTCH HUB	W501-17-732A	2	12A S, GS, GSL	
				1	13B GSL-SE	

1720A-1 CHANGE CONTROLS (MANUAL)

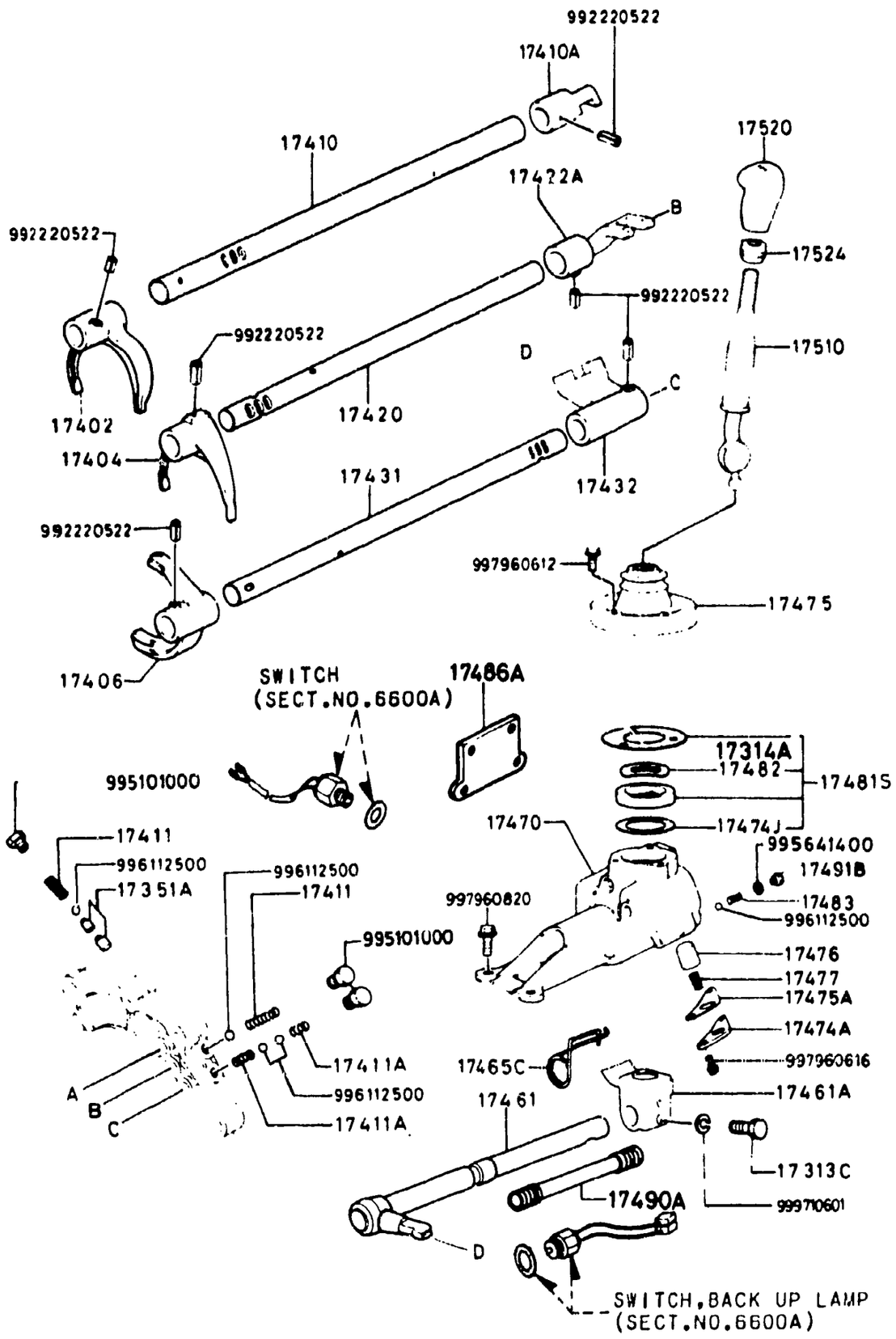

ITEM NO.	D-CODE	DESCRIPTION	PART NO.	QTY	MODEL/DESCRIPTION	REMARKS
	17 313C	BOLT	0118-17-313B	1		
	17 314A	WASHER	M505-17-482	1		
	17 351A	PIN, INTER LOCK	0114-17-351	2		
	17 402	FORK, SHIFT (1ST & 2ND)	M501-17-402B	1		
	17 404	FORK, SHIFT (3RD & 4TH)	M501-17-404B	1		
	17 406	FORK, SHIFT	M501-17-406A	1		
	17 410	ROD, SHIFT (1ST & 2ND)	M503-17-411	1		
	17 410A	END, SHIFT ROD (1ST & 2ND)	M501-17-412	1		
	17 411	SPRING	0103-17-411	2		
	17 411A	SPRING	0014-17-411	2		
	17 420	ROD, SHIFT (3RD & 4TH)	M503-17-421	1		
	17 422A	END, SHIFT ROD (3RD & 4TH)	M501-17-422	1		
	17 431	ROD, SHIFT	M505-17-431A	1		
	17 432	END, SHIFT	M501-17-432	1		
	17 461	LEVER, CONTROL	M503-17-450	1		
	17 461A	END, CONTROL ROD	M501-17-461A	1		
	17 465C	SPRING, SELECT	M501-17-465B	1		
	17 470	CASE, CHANGE CONTROL	M505-17-470E	1		
	17 474A	CAP, SPRING	M501-17-474	1		
	17 474J	SHIM, ADJUST	9996-33-130	1	(T=0.3)	
	17 475	BOOT, DUST	M501-17-480A	1		
	17 475A	GASKET, SPRING CAP	M501-17-475	1		
	17 476	SPINDLE, SELECT LOCK	M502-17-476A	1		
	17 477	SPRING	M501-17-477	1		
	17 481S	BUSHING SET, CHANGE LEVER	M505-99-178	1	12A (S, GS, GSL)	
	17 482	WASHER, WAVY	8599-17-482	1		
	17 483	SPRING	0824-17-483	1		
	17 486A	COVER, BLIND	M501-17-486	1		
		<A>	M501-17-486A	1		
	17 490A	COVER, ROD	M501-17-490B	1		
	17 491B	CAP, SPRING	0183-17-491	1		
	17 510	LEVER, CHANGE	M501-17-510E	1		
	17 520	KNOB, CHANGE LEVER	M507-17-520	1		
		RED	10			
		BLACK	65			
		BROWN	78			
	17 524	NUT, LOCK	M502-17-524	1		

1800A-1 ENGINE ELECTRICAL SYSTEM

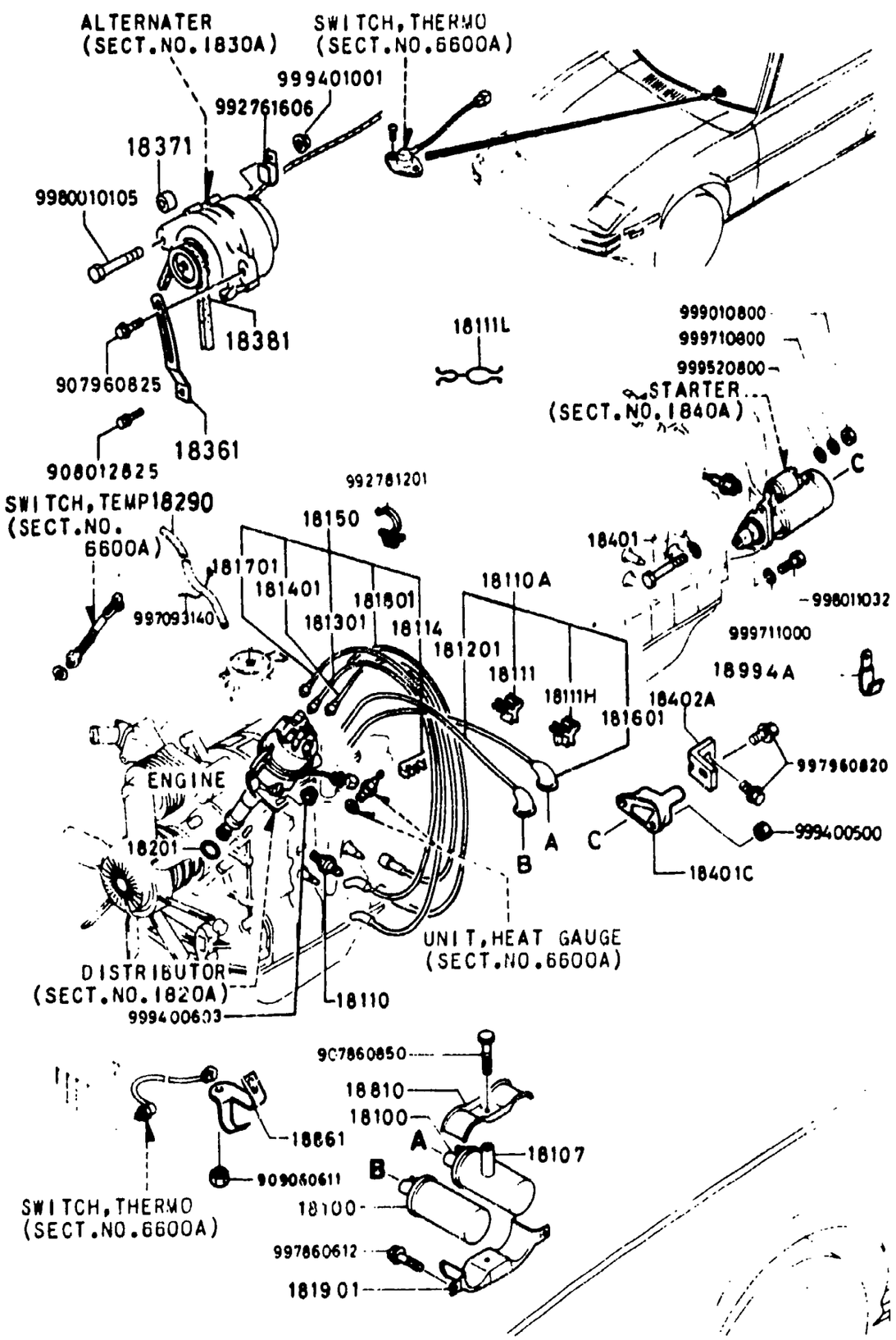

ITEM NO.	D-CODE	DESCRIPTION	PART NO.	QTY	MODEL/DESCRIPTION	REMARKS
	18 100	COIL, IGNITION	1480-18-100	2	(HANSHIN MAKE)	
			8245-18-100	2	(MITUBISHI MAKE)	
	18 107	PIPE	8245-18-107	1		
	18 110	PLUG, SPARK	N201-18-600	4	12A (S, GS, GSL) (BR8EQ-14 NGK)	
			8AF2-18-110A-8P	1	BLISTER PACK	
			N203-18-600	4	13B (GSL-SE) (BR9EQ-14 NGK)	
	18 110A	WIRE, HIGH TENSION	N304-18-110A	1		
	18 111	SUPPORTER	3648-18-111A	1		
	18 111H	SUPPORTER	N304-18-111A	1		
	18 111L	CLIP	N249-18-111	1		
	18 114	SUPPORTER	0820-18-114	1		
	18 1201	WIRE, HIGH TENSION	N304-18-120A	1		
	18 1301	WIRE, HIGH TENSION	1480-18-1308	1		
	18 1401	WIRE, HIGH TENSION	0000-18-097B	1		
	18 150	WIRE SET, HIGH TENSION	0000-18-097B	1		
	18 1601	WIRE, HIGH TENSION	N304-18-160A	1		
	18 1701	WIRE, HIGH TENSION	1480-18-1708	1		
	18 1801	WIRE, HIGH TENSION	8871-18-180A	1		
	18 1901	BRACKET, IGNITION COIL	8871-18-810A	1		
	18 201	O-RING	9954-10-3501	1		
	18 290	TUBE, VACUUM CONTROL	9935-10-4999		BULK QTY	
	18 361	STRAP, ALTERNATOR	1881-18-361A	1		
	18 371	BRACKET, ALTERNATOR	N245-18-311B	1		
	18 381	V-BELT	8311-18-381A	1		
	18 401	BOLT, STARTER	N235-18-401	1	A/T	
	18 401C	BRACKET, STARTER	N250-18-401A	1	A/T	
	18 402A	BRACKET, STARTER	N250-18-402	1	A/T	
	18 810	BRACKET, IGNITION	8871-18-106C	1		
	18 861	CLIP	8341-18-861C	1	13B (GSL-SE)	
	18 994A	CLIP, ENGINE HARNESS	1820-18-994	1		

1820A-1 DISTRIBUTOR

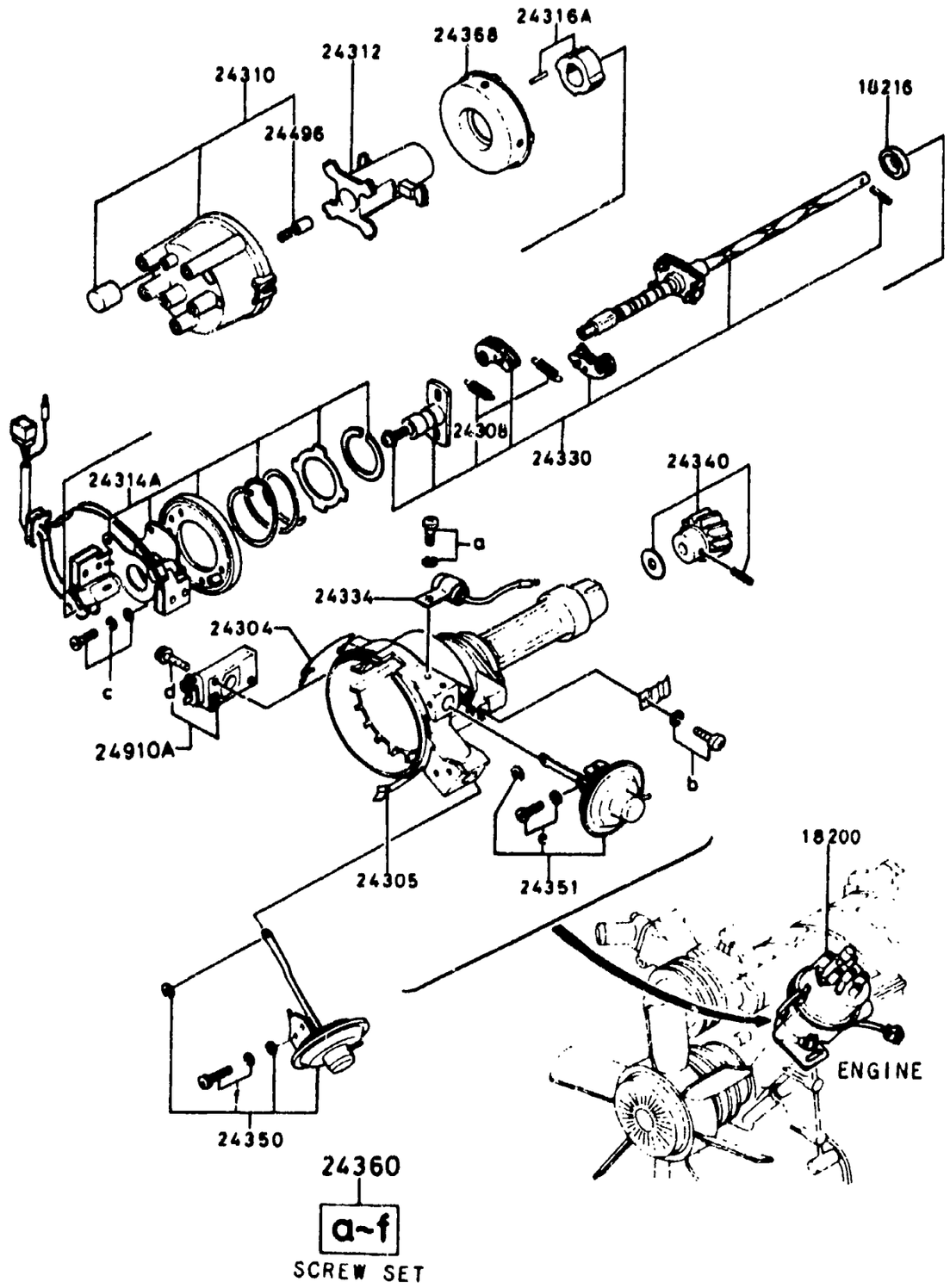

ITEM NO.	D-CODE	DESCRIPTION	PART NO.	QTY	MODEL/DESCRIPTION	REMARKS
	18 200	DISTRIBUTOR	N249-18-200A	1	12A (S, GS, GSL)	
			N304-18-200B	1	13B (GSL-SE)	
	18 216	SEAL, OIL	0107-18-216A	1		
	24 304	CLAMP	8245-24-304	1		
	24 305	CLAMP	8245-24-305	1		
	24 308	SPRING SET	1480-24-308	1	12A (S, GS, GSL)	
			N304-24-308	1	13B (GSL-SE)	
	24 310	CAP, DISTRIBUTOR	8245-24-310B	1		
	24 312	ROTOR, DISTRIBUTOR	8245-24-303A	1		
			8AF1-24-310A-BP	1	CAP & ROTOR BLISTER PAK	
	24 314A	PICK-UP SET	N236-24-314	1		
	24 316A	ROTOR SET, SIGNAL	8248-24-316	1		
	24 330	GOVERNOR SET	N249-24-330	1	12A (S, GS, GSL)	
			N304-24-330	1	13B (GSL-SE)	
	24 334	CONDENSOR	1757-24-334	1		
	24 34C	COUPLING SET	3648-24-340	1		
	24 350	VACUUM SET	1480-24-350A	1		
			N304-24-350	1	13B (GSL-SE)	
	24 351	VACUUM SET	N231-24-351	1	12A (S, GS, GSL)	
			N304-24-351	1	13B (GSL-SE)	
	24 360	SCREW SET	8248-24-360	1		
	24 368	COVER	8245-24-368A	1		
	24 496	CONTACT	1757-24-302	1		
	24 910A	IGNITER SET	E301-24-910	2		

1830A-1 ALTERNATOR

SEE SECTION 1580A FOR FAN BELT

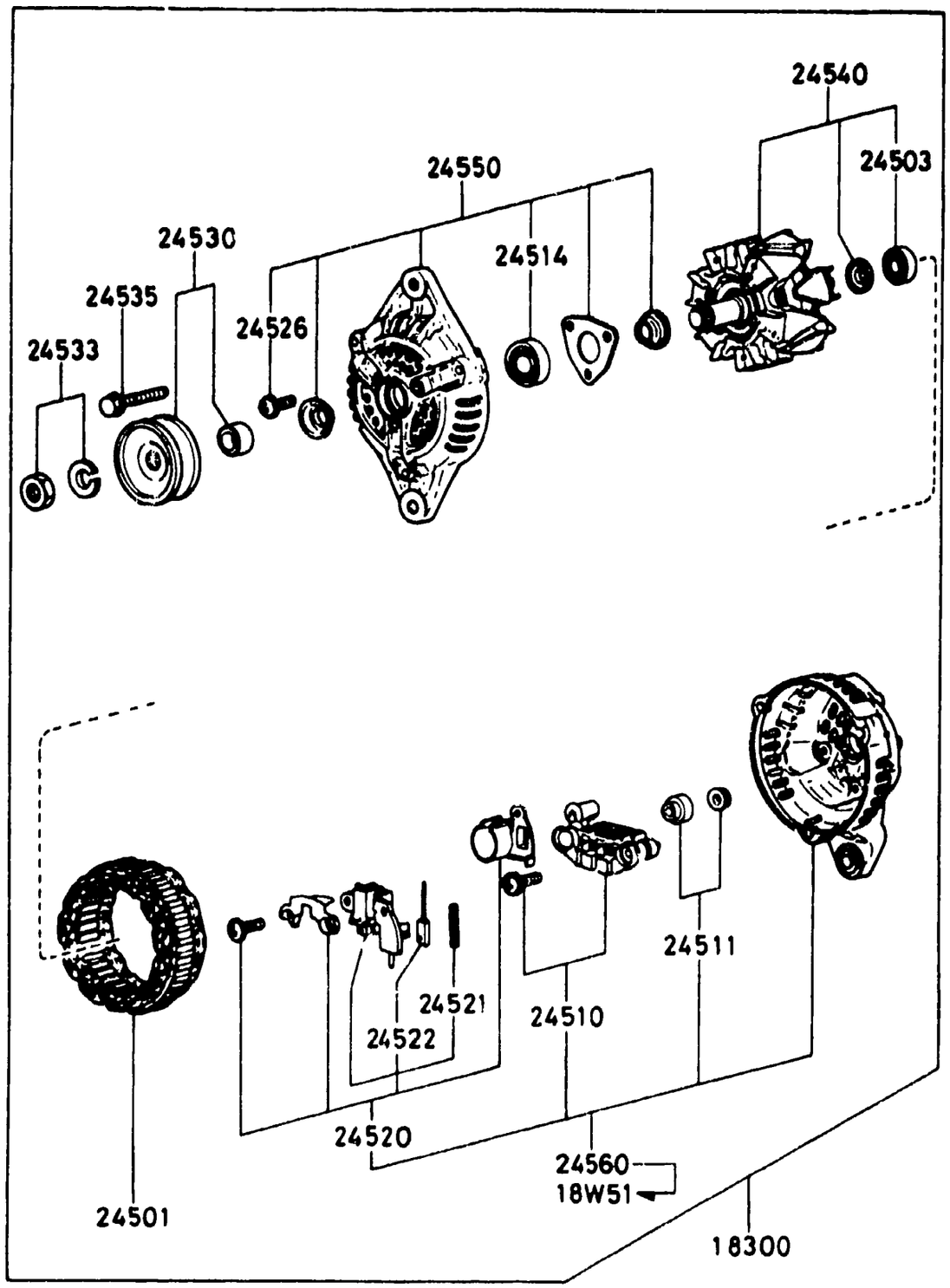

ITEM NO.	D-CODE	DESCRIPTION	PART NO.	QTY	MODEL/DESCRIPTION	REMARKS
	18 300	ALTERNATOR	N304-18-300R	1	REMAN.	
		REFER TO PARTS BULL. NOS. R-1 & R-5 FOR MORE INFO.				
	18 W51	BRACKET, REAR	FE65-18-W50A	1	FROM DEC. '84 PROD.	FB33* .. 880507-
	24 501	STATOR	E356-18-W45	1	12A (S, GS, GSL)	
			FE65-24-501A	1	13B (GSL-SE)	
	24 503	BEARING, BALL	FE65-24-503	1	THRU NOV. '84 PROD.	FB33* ..800001-877562
			B612-18-W36	1	FOM DEC. '84 PROD.	FB33* ..877563-
	24 510	RECTIFIER	FE65-24-510	1	THRU MAR. '85 PROD.	FB33* ..80000`-893765
			FE65-18-W60A	1	FROM APR. '85 PROD.	FB33* ..893766-
	24 511	NUT SET	SE21-24-511	1		
	24 514	BEARING, BALL	FE65-24-523	1	THRU NOV. '84 PROD.	FB33* ..800001-877562
			FE38-24-W27	1	FROM DEC. '84 PROD.	FB33* ..877563-
	24 520	REGULATOR	E356-18-W70	1		
	24 521	SPRING, BRUSH	B173-24-521	2		
	24 522	BRUSH	FE65-24-522	2		
	24 526	SCREW SET	FE65-24-526	1		
	24 530	PULLEY	N304-24-530	1	THRU NOV. '84 PROD.	FB33* ..800001-878002
			N304-24-530A	1	FROM DEC. '84 PROD.	FB33* ..878003-
	24 533	NUT SET	8028-24-533	1		
	24 535	SCREW SET	FE65-24-535	1		
	24 540	ROTOR	FE65-24-540	1	THRU NOV. '84 PROD.	FB33* ..800001-880506
			E356-18-W35	1	FROM DEC. '84 PROD.	FB33* ..880507-
	24 550	BRACKET, FRONT	FE65-24-550	1	THRU NOV. '84 PROD.	FB33* ..800001-880506
			FE65-18-W25	1	FROM DEC.'84 PROD.	FB33* ..880507
	24 560	BRACKET, REAR	FE65-24-560	1	THRU NOV.'84 PROD.	FB33* . 800001-880506

1840A-1 STARTER

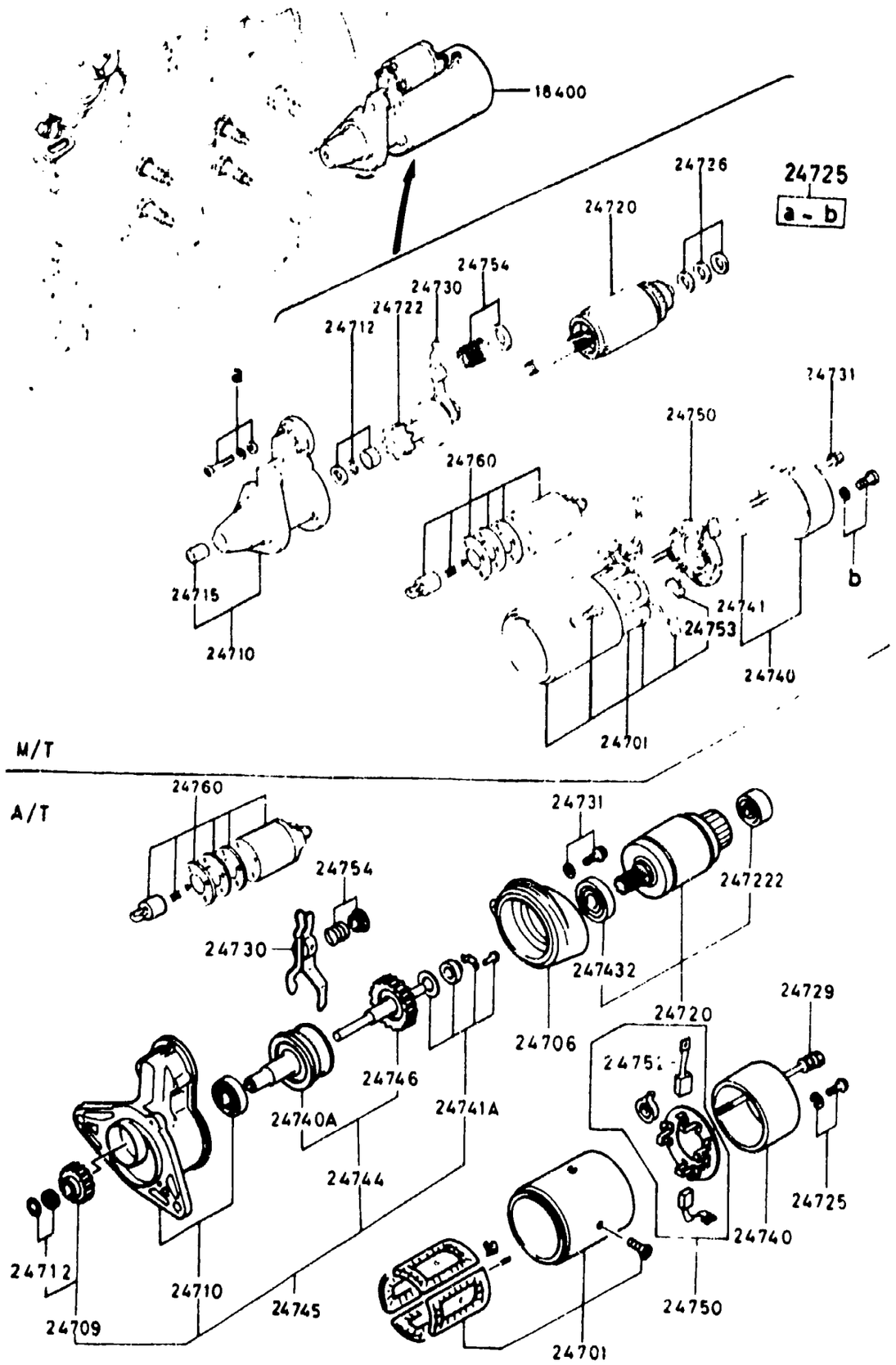

ITEM NO.	D-CODE	DESCRIPTION	PART NO.	QTY	MODEL/DESCRIPTION	REMARKS
	18 400	STARTER	N221-18-400R	1	M/T, REMAN.	
			N250-18-400R	1	A/T, REMAN.	
		REFER TO PARTS BULL. NOS. R-1 & R-5 FOR MORE INFO.				
	24 701	YOKE	N221-24-701	1	M/T	
			N250-24-730	1	A/T	
	24 706	BRACKET, CENTER	N202-24-721	1	A/T	
	24 709	PINION	N202-24-709	1	A/T	
	24 710	BRACKET, FRONT	N221-24-710	1	M/T	
			N250-24-710A	1	A/T	
	24 712	STOPPER SET	N202-24-712	1	A/T	
			0426-24-712A	1	M/T	
	24 715	SLEEVE, BEARING	N221-24-715	1	M/T	
	24 720	ARMATURE	N202-24-705	1	A/T	
			N221-24-705	1	M/T	
	24 722	CLUTCH, OVER RUNNING	N221-24-709	1	M/T	
	24 7222	BEARING	N202-24-722	1	A/T	
	24 725	SCREW SET	N202-24-728	1	A/T	
			0426-24-725	1	M/T	
	24 726	WASHER SET	0426-24-726	1	M/T	
	24 729	BOLT	N202-24-729A	2	A/T	
	24 730	LEVER	N221-24-730	1	M/T	
			N250-24-716	1	A/T	
	24 731	BOLT SET	N202-24-731	1	A/T	
			1030-24-731A	1	M/T	
	24 740	BRACKET, REAR	N202-24-720	1	A/T	
			0222-24-740	1	M/T	
	24 740A	SHAFT	N202-24-740	1	A T	
	24 741	SLEEVE, BEARING	0222-24-741	1	M T	
	24 741A	COVER SET	N202-24-741	1	A T	
	24 7432	BEARING	N202-24-743	1	A T	
	24 744	GEAR SET	N202-24-744	1	A T	
	24 745	SHAFT, CLUTCH	N202-24-745	1	A T	
	24 746	GEAR	N202-24-746	1	A T	
	24 750	HOLDER, BRUSH	E301-24-750	1	M T	
			N202-24-750	1	A T	
	24 752	SPRING, BRUSH	0222-24-752A	4	A T	
	24 753	BRUSH, YOKE	E301-24-753	2	M T	
	24 754	SPRING SET	N226-24-754	1	M T	
			0426-24-754	1	A T	
	24 760	SWITCH	N226-24-760	1	M T	

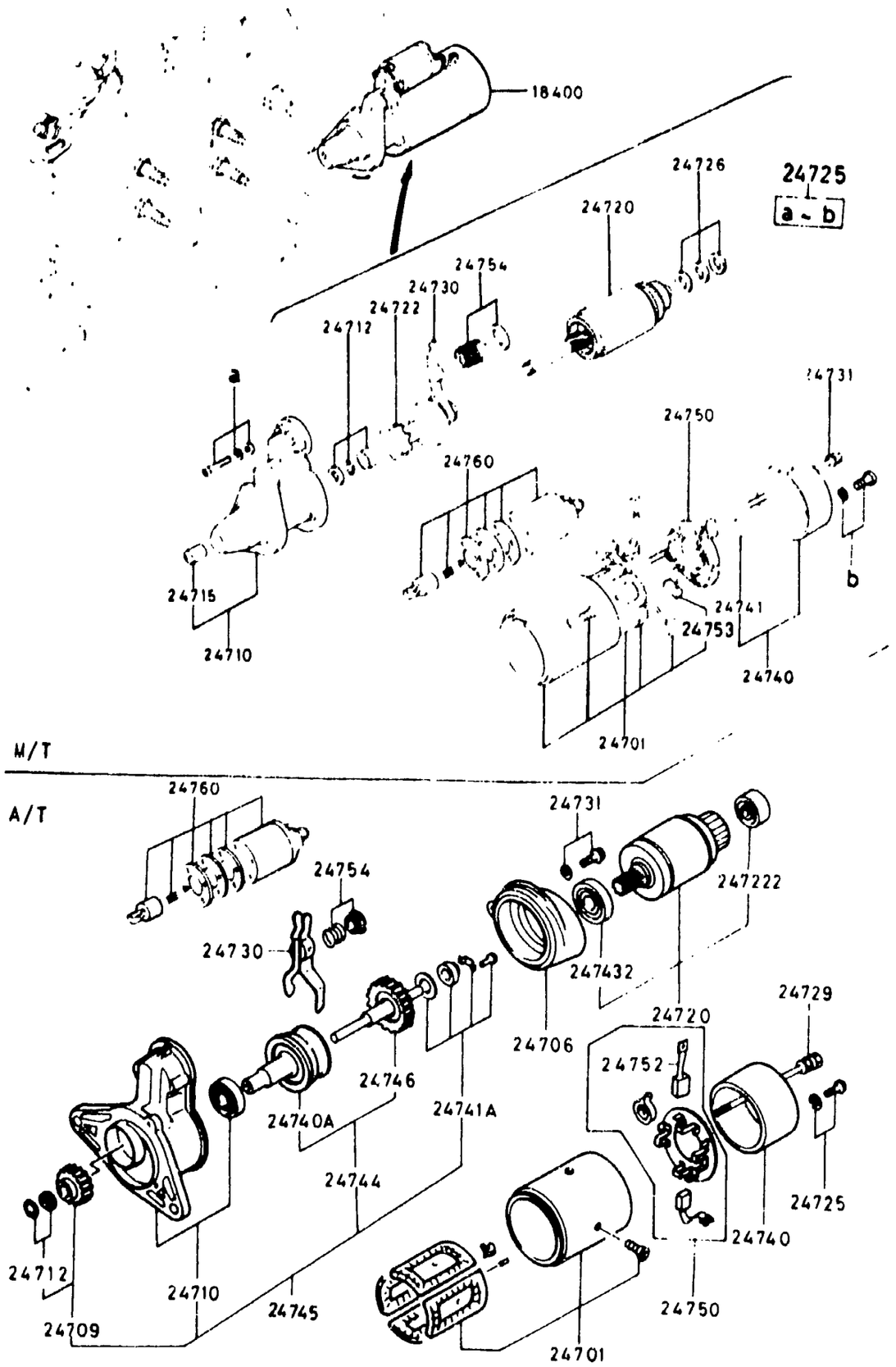

ITEM NO	D-CODE	DESCRIPTION	PART NO.	QTY	MODEL/DESCRIPTION	REMARKS
	24 760 (CONT'D)		8872-24-736	1	A/T	

1850A-1 BATTERY & CABLES

• SEE SERVICE BULLETIN 009/85 CATEGORY 14 FOR BATTERY INFO.

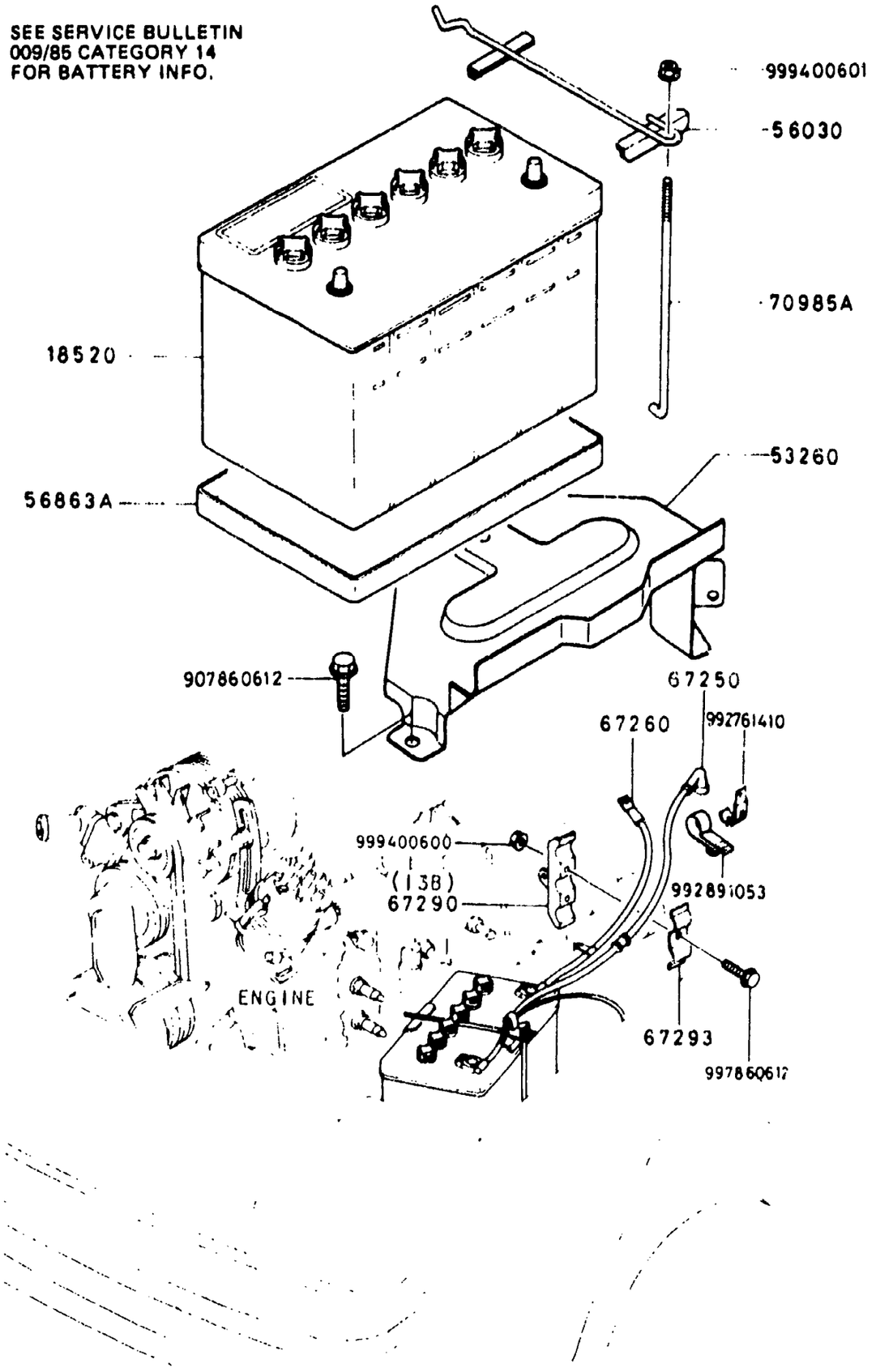

ITEM NO	D-CODE	DESCRIPTION	PART NO	QTY	MODEL/DESCRIPTION	REMARKS
	18 520	BATTERY	0000-80-124F	1		
		SEE ACCESSORY BULLETIN NO XG-4 FOR MORE BATTERY INFO.				
	53 260	CARRIER, BATTERY	FA54-54-260	1		
	56 030	CLAMP, BATTERY	FA54-56-030A	1		
	56 863A	TRAY, BATTERY	2113-54-295	1		
	67 250	CABLE, POSITIVE-BATTERY	FA54-67-250E	1	12A M/T (S, GS, GSL)	
			FA55-67-250F	1	A/T	
			FA66-67-250E	1	13B (GSL-SE)	
	67 260	CABLE, GROUND BATTERY	FA54-67-260B	1		
	67 290	CLIP, CABLE	1011-67-291A	1	13B (GSL-SE)	
	67 293	CLIP, CABLE	1011-67-293	1		
	70 985A	BOLT, CLAMP	0613-65-857A	1		

1910A-1 TORQUE, CONVERTER, OIL PUMP & PIPING (AUTOMATIC)

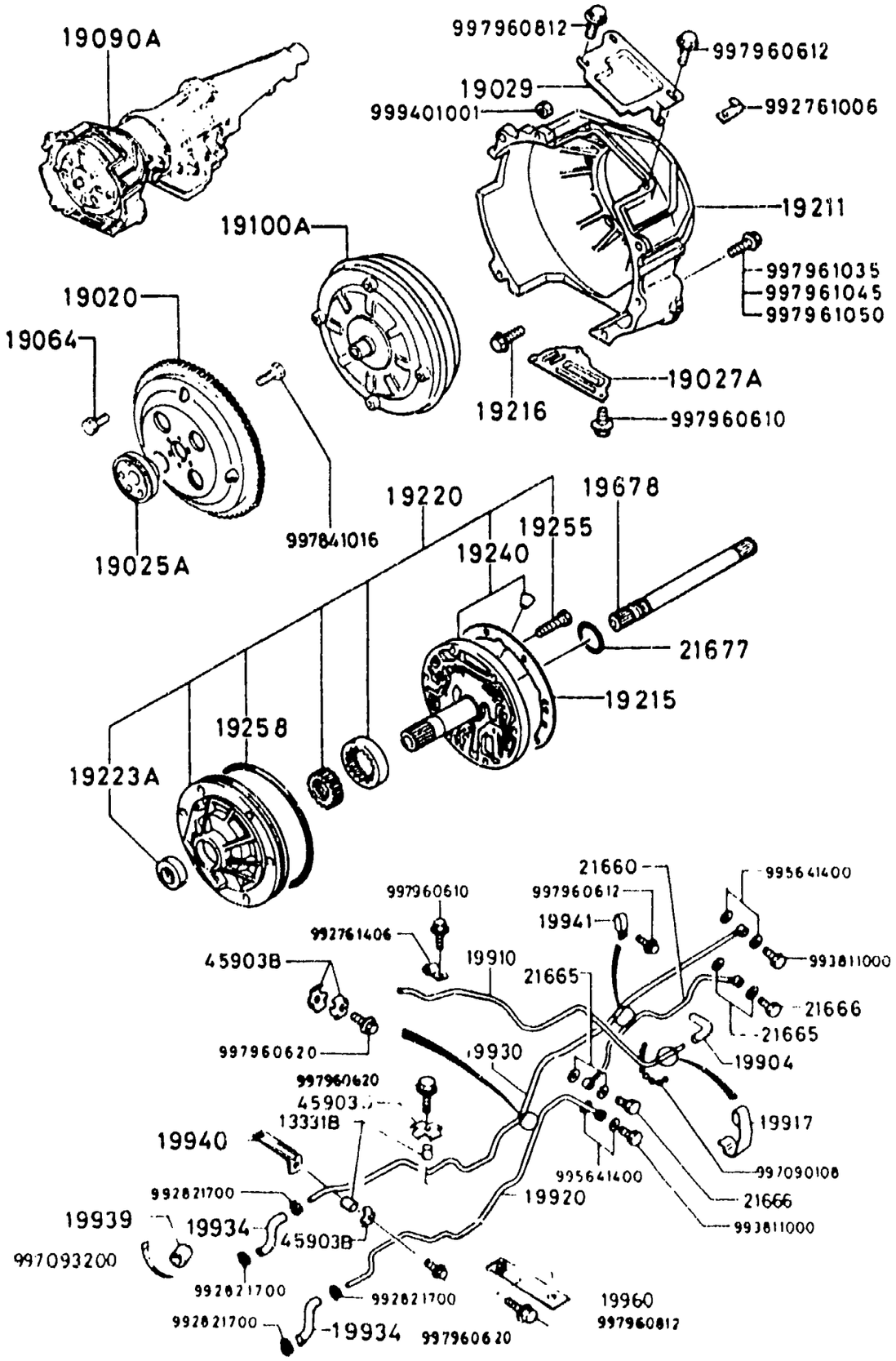

ITEM NO	D-CODE	DESCRIPTION	PART NO	QTY	MODEL/DESCRIPTION	REMARKS
	13 331B	SPACER, OIL PIPE	2850-13-331	2		
	19 020	PLATE, DRIVE	8U02-19-020B	1		
	19 025S	ADAPTER	0842-19-025	1		
	19 027A	COVER, UNDER	8U02-19-027	1		
	19 029	COVER, TOP	8U02-19-028B	1		
	19 064	BOLT	3649-19-064A	4		
	19 090A	TRANSMISSION	8U16-19-090C	1		
	19 100A	CONVERTER, TORQUE	8U06-19-100A	1		
	19 211	HOUSING, CONVERTER	8U02-19-211C	1		
	19 215	GASKET, OIL PUMP	8U01-19-215	1		
	19 216	BOLT	8U01-19-216	6		
	19 220	PUMP, OIL	8U16-19-220A	1		
	19 223A	SEAL, OIL	0338-19-223A	1		
	19 240	COVER	8U16-19-240A	1		
	19 255	BOLT	0338-19-255	5		
	19 258	SEAL, CUT RING	0338-19-258	1		
	19 678	SHAFT, INPUT	8U01-21-678	1		
	19 904	HOSE, VACUUM	0338-19-904A	1		
	19 910	PIPE, VACUUM	8U11-19-910	1		
	19 917	CLIP	0436-19-917	1		
	19 920	PIPE, OIL	8U06-19-920A	1		
	19 930	PIPE, OIL	8U06-19-930A	1		
	19 934	HOSE OIL	8U06-19-934	2		
	19 939	GUIDE, OIL HOSE	1098-19-939	2		
	19 940	BRACKET PIPE	8U06-19-940	1		
	19 941	CLIP	8U01-19-941	1		
	19 960	BRACKET	AT09-19-961	1		
	21 660	TUBE GOVERNOR	8U01-21 660A	1		
	21 665	WASHER SEAL	8U01-21 665	4		
	21 666	BOLT CONNECTOR	8U01-21 666	2		
	21 677	O-RING	8U01-21-677	1		
	45 9038	CLIP	8173-45-903	4		

SECTION INDEX -- ENGINE

STARTING LOCATION	SECT NO.	SECTION NAME
1 - C 3	1000A	SHORT ENGINE & GASKET SETS
1 - D 3	1030A	ROTOR HOUSING
1 - E 3	1040A	OIL PAN, FRONT & REAR HOUSING
1 - G 3	1100A	ECCENTRIC SHAFT & FLYWHEEL
1 - H 3	1110A	ROTOR & RELATED
1 - I 3	1300A	INTAKE MANIFOLD (12A) (S,GS,GSL)
1 - J 3	1300AA	INTAKE MANIFOLD (13B) (GSL-SE)
1 - K 3	1310A	EXHAUST MANIFOLD (12A) (S,GS,GSL)
1 - L 3	1310AA	EXHAUST MANIFOLD (13B) (GSL-SE)
1 - M 3	1320A	FUEL SYSTEM (12A) (S,GS,GSL)
1 - C 4	1320AA	FUEL SYSTEM (13B) (GSL-SE)
1 - E 4	1330A	AIR CLEANER (12A) (S,GS,GSL)
1 - F 4	1330AA	AIR CLEANER (13B) (GSL-SE)
1 - G 4	1350A	STARTING ASSIST SYSTEM (12A) (S,GS,GSL) (FEDERAL ONLY)
1 - H 4	1350AA	STARTING ASSIST SYSTEM (13B) (GSL-SE) (FEDERAL ONLY)
1 - I 4	1359A	CARBURETOR & REPAIR KIT (12A) (S,GS,GSL)
1 - J 4	1360A	CARBURETOR COMPONENTS (12A) (S,GS,GSL)
1 - L 4	1371A	AIR PUMP & AIR CONTROL VALVE (12A) (S,GS,GSL)
1 - M 4	1371AA	AIR PUMP & AIR CONTROL VALVE (13B) (GSL-SE)
1 - N 4	1380A	EMISSION CONTROLS (12A) (S, GS,GSL)
1 - C 5	1380AA	EXHAUST SIDE EMISSION CONTROLS (13B) (GSL-SE)
1 - E 5	1400A	OIL PUMP & FILTER (12A) (S,GS,GSL)
1 - F 5	1400AA	OIL PUMP & FILTER (13B) (GSL-SE)
1 - H 5	1500A	COOLING SYSTEM (12A) (S,GS,GSL)
1 - I 5	1500AA	COOLING SYSTEM (13B) (GSL-SE)
1 - K 5	1580A	COMPRESSOR BRACKET, PULLEY & BELT
1 - L 5	1600A	CLUTCH DISC & COVER
1 - M 5	1700A	TRANSMISSION CASE (MANUAL)
1 - C 6	1710A	TRANSMISSION GEARS (MANUAL)
1 G 6	1720A	CHANGE CONTROLS (MANUAL)
1 - H 6	1800A	ENGINE ELECTRICAL SYSTEM
1 - I 6	1820A	DISTRIBUTOR
1 - J 6	1830A	ALTERNATOR
1 - K 6	1840A	STARTER
1 - M 6	1850A	BATTERY & CABLES
1 - N 6	1910A	TORQUE, CONVERTER, OIL PUMP & PIPING (AUTOMATIC)
1 - C 7	1920A	TRANSMISSION CASE & MAIN CONTROLS (AUTOMATIC)
1 - E 7	1930A	CLUTCH & PLANETARY GEAR (AUTOMATIC)
1 - G 7	1940A	LOW, REVERSE & GOVERNOR (AUTOMATIC)
1 - H 7	1950A	MANUAL LINKAGE (AUTOMATIC
1 - I 7	1960A	GASKET & SEAL KIT (AUTOMATIC)

1920A-1 TRANSMISSION CASE & MAIN CONTROLS (AUTOMATIC)

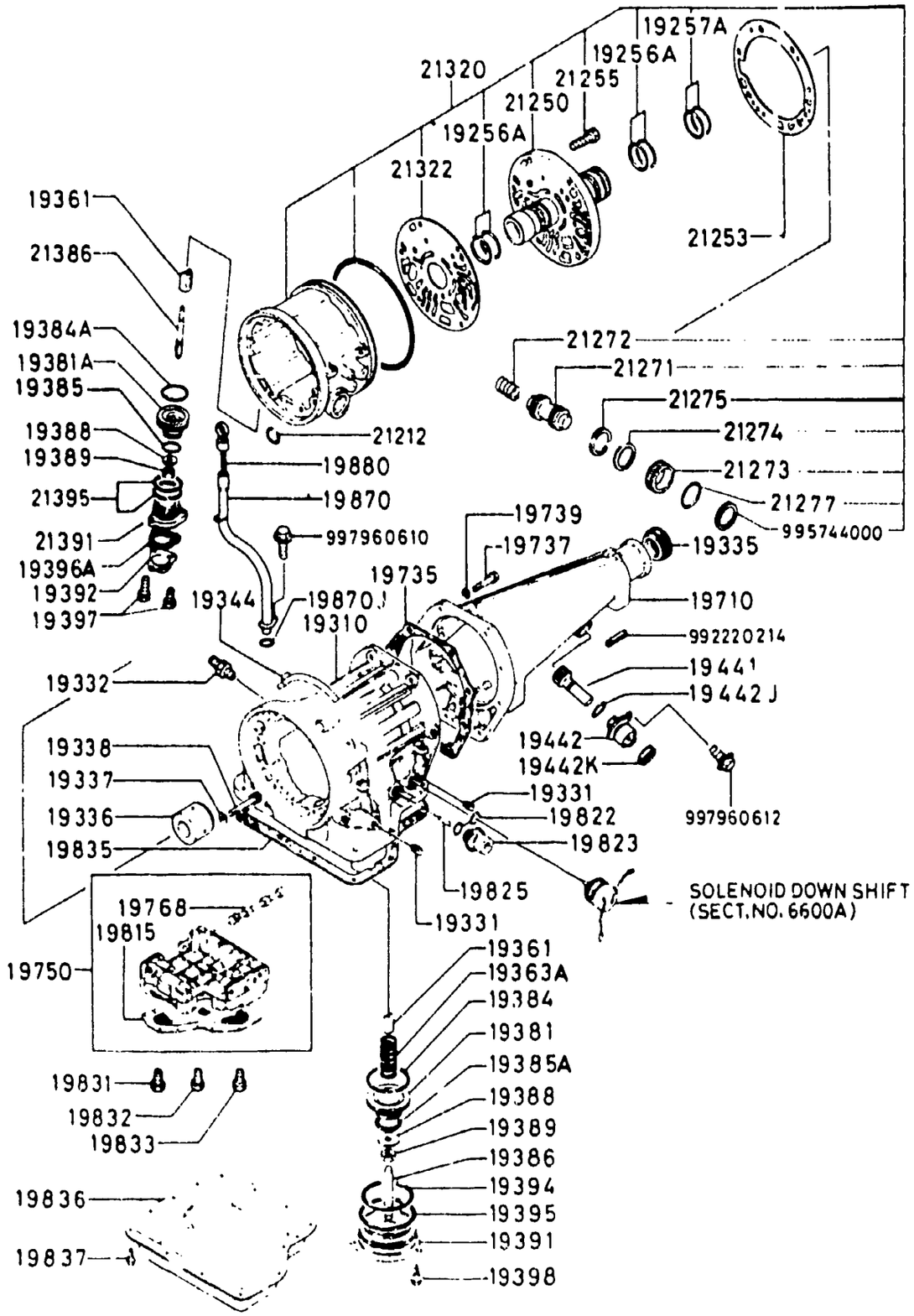

ITEM NO.	D-CODE	DESCRIPTION	PART NO.	QTY	MODEL/DESCRIPTION	REMARKS
	19 256A	RING, SEAL	BU01-19-256	4		
	19 257A	RING, SEAL	BU01-19-257	2		
	19 310	CASE, TRANSMISSION	BU06-19-310	1		
	19 331	PLUG, SQUARE HEAD	0338-19-331A	2		
	19 332	CONNECTOR, STRAIGHT	BU01-19-332A	1		
	19 335	SEAL, OIL	0437-17-335A	1		
	19 336	RACE, INNER	0338-19-336	1		
	19 337	WASHER, PLAIN	0338-19-337	8		
	19 338	BOLT	0338-19-338	8		
	19 344	BREATHER, AIR	0397-19-340	1		
	19 361	STRUT, BAND	0338-19-361B	2		
	19 363A	SPRING, PISTON RETURN	BU06-19-363	1		
	19 381	PISTON, BAND SERVO	0842-19-381	1		
	19 381A	PISTON, BAND SERVO	3959-19-381	1		
	19 384	SEAL, PISTON	0338-19-384	1		
	19 384A	SEAL, PISTON	3959-19-384	1		
	19 385	SEAL, PISTON	0338-19-385A	1		
	19 385A	SEAL, PISTON	0842-19-385	1		
	19 386	STEM, PISTON	0338-19-386A	1		
	19 388	WASHER, PLAIN	0338-19-388A	2		
	19 389	NUT	0338-19-389	2		
	19 391	RETAINER, SERVO	BU01-19-391	1		
	19 392	COVER, SERVO	1758-19-392A	1		
	19 394	SEAL, LATHE CUT	0842-19-394	1		
	19 395	O-RING	0338-19-395	1		
	19 396A	GASKET	1758-19-394A	2		
	19 397	BOLT	1758-19-397	3		
	19 398	BOLT	0338-19-398	3		
	19 441	GEAR, DRIVEN	8057-17-441C	1		
	19 442	SLEEVE, SPEEDO GEAR	1011-17-442A	1		
	19 442J	O-RING	1011-17-443	1		
	19 442K	SEAL, OIL	9958-60-8166	1		
	19 710	HOUSING, EXTENSION	BU06-19-710	1		
	19 735	GASKET, EXTENSION	0338-19-735	1		
	19 737	BOLT	0338-19-737	8		
	19 739	WASHER, PLAIN	0338-19-739	8		
	19 750	VALVE, CONTROL	BU16-19-750A	1		
	19 768	VALVE, MANUAL	0338-19-768	1		
	19 815	STRAINER, OIL	BU01-19-815	1		
	19 822	SEAL, O-RING	0338-19-822	2		

1920A-2 TRANSMISSION CASE & MAIN CONTROLS (AUTOMATIC)

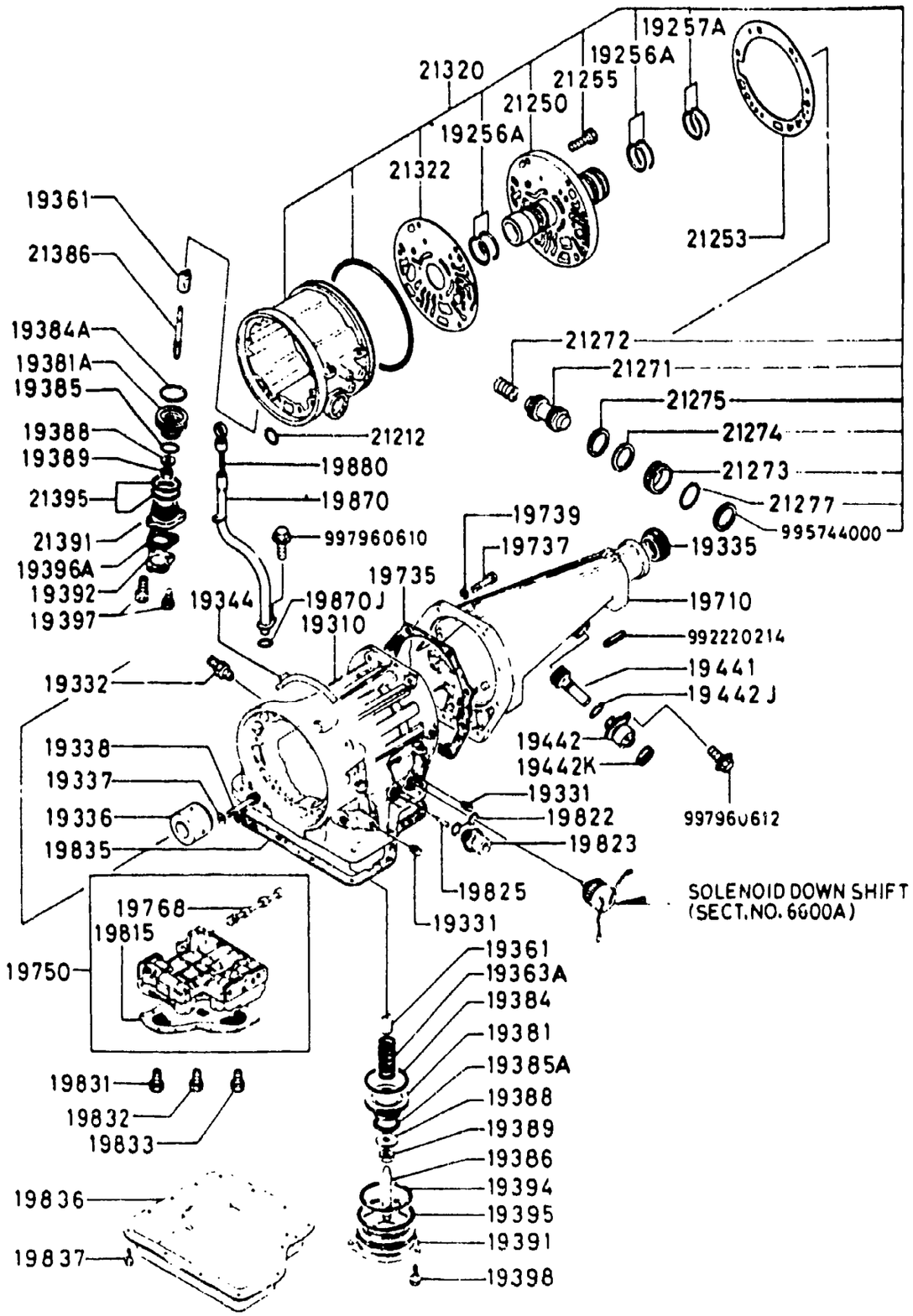

ITEM NO.	D-CODE	DESCRIPTION	PART NO.	QTY	MODEL/DESCRIPTION	REMARKS
	19 823	DIAPHRAGM, VACUUM	BT07-19-823	1		
	19 825	ROD, DIAPHRAGM	FT01-19-824	1	(L=29.0)	
			0338-19-829	1	(L=29.5)	
			0338-19-825	1	(L=30.0)	
			0338-19-826	1	(L=31.0)	
			0338-19-827	1	(L=31.5)	
	19 831	BOLT, CONTROL VALVE	0338-19-831	3		
	19 832	BOLT, CONTROL VALVE	0338-19-832	2		
	19 833	BOLT, CONTROL VALVE	0338-19-833	2		
	19 835	GASKET, OIL PAN	0338-19-835B	1		
	19 836	PAN, OIL	0338-19-836A	1		
	19 837	BOLT, OIL PAN	0338-19-837	18		
	19 870	TUBE, OIL LEVEL	BU06-19-870	1		
	19 870J	O-RING	9954-10-1601	1		
	19 880	DIPSTICK	BU06-19-880	1		
	21 212	O-RING	BU01-21-212	1		
	21 250	SUPPORT, DRUM	BU10-21-250	1		
	21 253	GASKET, DRUM SUPPORT	BU01-21-253	1		
	21 255	BOLT	BU01-21-255	5		
	21 271	PISTON, ACCUMULATOR	BU10-21-271	1		
	21 272	SPRING, ACCUMULATOR	BU01-21-272A	1		
	21 273	PLUG, ACCUMULATOR	BU01-21-273	1		
	21 274	SEAL, O-RING	BU01-21-274	1		
	21 275	SEAL, O-RING	BU10-21-275	1		
	21 277	O-RING	BU01-21-277	1		
	21 320	CASE, OVER DRIVE	BU05-21-320A	1		
	21 322	GASKET, O/DRIVE CASE	BU01-21-322	1		
	21 386	STEM, PISTON BAND	BU01-21-386	1		
	21 391	RETAINER, SERVO	BU01-21-391	1		
	21 395	O-RING	BU01-21-395	2		

1930A-1 CLUTCH & PLANETARY GEAR (AUTOMATIC)

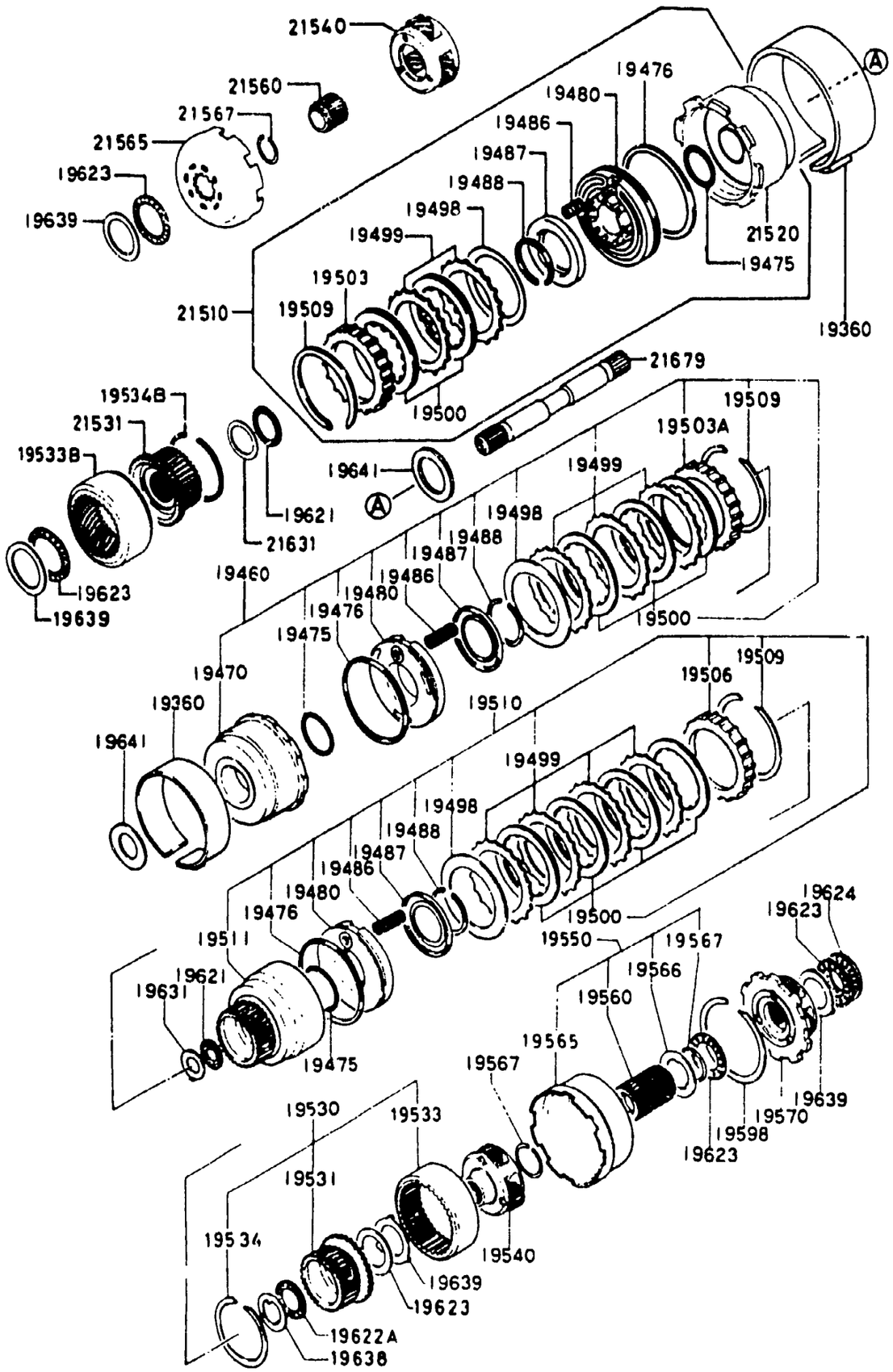

ITEM NO.	D-CODE	DESCRIPTION	PART NO.	QTY	MODEL/DESCRIPTION	REMARKS
	19 360	BAND, BRAKE	0338-19-360B	2		
	19 460	CLUTCH, FRONT	3959-19-460A	1		
	19 470	DRUM, CLUTCH	3959-19-470A	1		
	19 475	SEAL, O-RING	0338-19-475	3		
	19 476	SEAL, LATHE CUT	0338-19-476	3		
	19 480	PISTON, CLUTCH	0338-19-480	3		
	19 486	SPRING, PISTON RETURN	0338-19-486	30		
	19 487	RETAINER, SPRING	0338-19-487	3		
	19 488	RING, SNAP	0338-19-488	3		
	19 498	PLATE, DISHED	BU17-19-498	3		
	19 499	PLATE, DRIVEN	0338-19-499	9		
	19 500	PLATE, DRIVE	BU17-19-500A	9		
	19 503	PLATE, RETAINING	1758-19-503	1	(T=7.2)	
			1758-19-504	1	(T=7.4)	
			1758-19-505	1	(T=7.6)	
			1758-19-506	1	(T=7.8)	
			1758-19-507	1	(T=8.0)	
			1758-19-508	1	(T=8.2)	
	19 503A	PLATE, RETAINING	3959-19-503	1	(T=5.0)	
			3959-19-504	1	(T=5.2)	
			3959-19-505	1	(T=5.4)	
			3959-19-506	1	(T=5.6)	
			3959-19-507	1	(T=5.8)	
			3959-19-508	1	(T=6.0)	
			3959-19-509	1	(T=6.2)	
	19 506	PLATE, RETAINING	BU07-19-507	1		
	19 509	RING, SNAP	0338-19-509	3		
	19 510	CLUTCH, REAR	BU07-19-510	1		
	19 511	DRUM, REAR CLUTCH	1758-19-511	1		
	19 530	HUB, REAR CLUTCH	0338-19-530	1		
	19 531	HUB, REAR CLUTCH	0338-19-531	1		
	19 533	GEAR, INTERNAL	0338-19-533A	1		
	19 533B	GEAR, INTERNAL	BU03-19-533	1		
	19 534	RING, SNAP	BU03-19-534	1		
	19 534B	RING SNAP	0338-19-534	1		
	19 540	CARRIER, FRONT	0338-19-540	1		
	19 550	GEAR, SHELL & SUN	0338-19-550	1		
	19 560	GEAR, SUN	0338-19-560	1		
	19 565	SHELL, CONNECTING	0338-19-565	1		
	19 566	RACE, SHELL BEARING	0338-19-566	1		

1930A-2 CLUTCH & PLANETARY GEAR (AUTOMATIC)

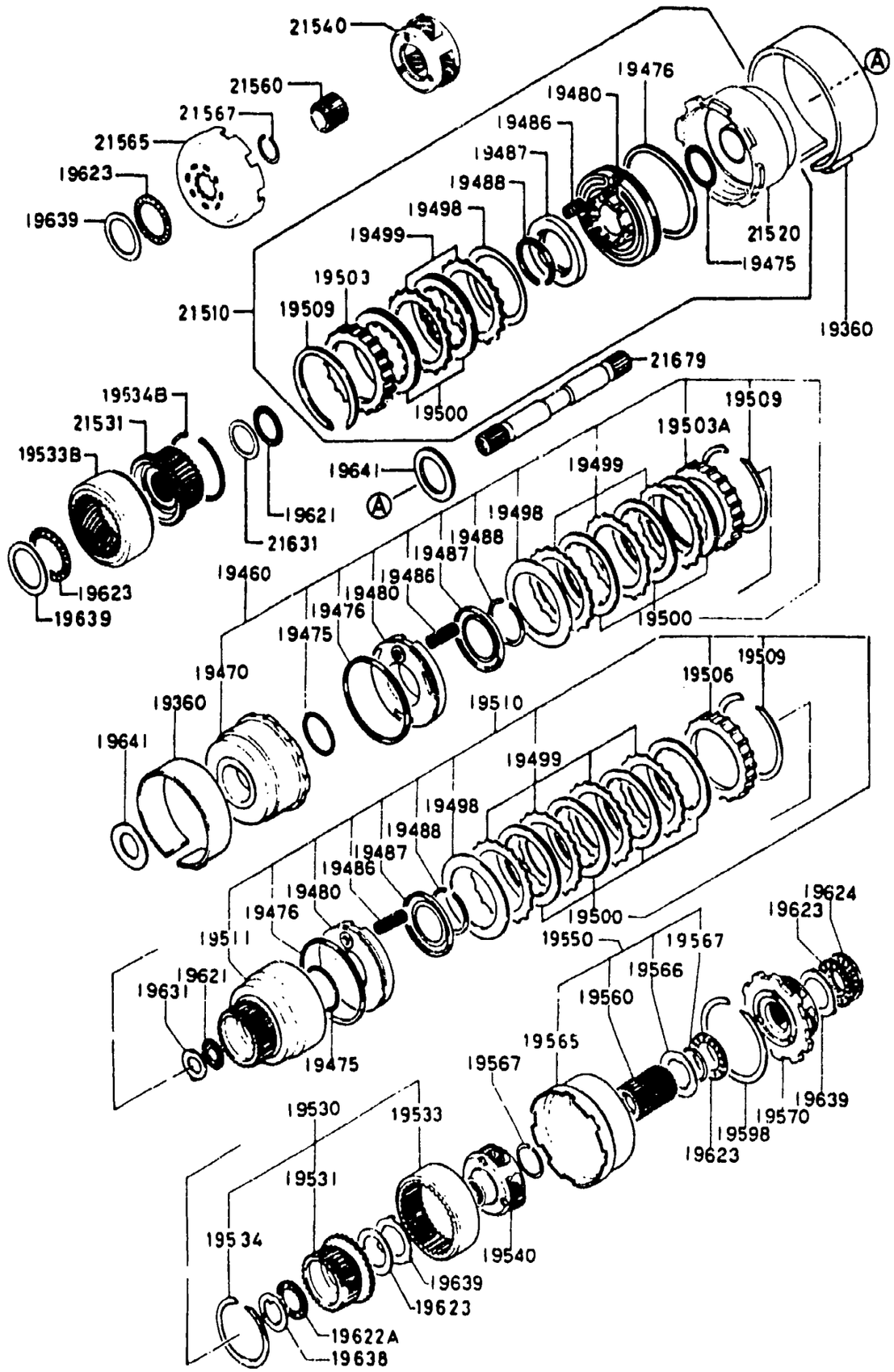

ITEM NO.	D-CODE	DESCRIPTION	PART NO.	QTY	MODEL/DESCRIPTION	REMARKS
	19 567	RING, SNAP	0338-19-567	1		
	19 570	CARRIER, REAR	0338-19-570	1		
	19 598	RING, SNAP	0338-19-598	1		
	19 621	BEARING, NEEDLE	0338-19-621	2		
	19 622A	BEARING, NEEDLE	0338-19-622	2		
	19 623	BEARING, NEEDLE	0338-19-623A	5		
	19 624	BEARING, NEEDLE	0338-19-624	1		
	19 631	RACE, BRG. PUMP COVER	0338-19-631	1	(T=1.2)	
			0338-19-632	1	(T=1.4)	
			0338-19-633	1	(T=1.6)	
			0338-19-634	1	(T=1.8)	
			0338-19-635	1	(T=2.0)	
			0338-19-636	1	(T=2.2)	
	19 638	RACE, BRG. RR. CLUTCH	0436-19-656	2		
	19 639	RACE, BEARING	0338-19-639	4		
	19 641	WASHER, FRONT CLUTCH	0338-19-648	2	(T=1.3)	
			0338-19-646	2	(T=1.5)	
			0338-19-647	2	(T=1.7)	
			0338-19-641	2	(T=1.9)	
			0338-19-642	2	(T=2.1)	
			0338-19-643	2	(T=2.3)	
			0338-19-644	2	(T=2.5)	
			0338-19-645	2	(T=2.7)	
	21 510	CLUTCH, DIRECT	BU03-21-510	1		
	21 520	DRUM, DIRECT	BU03-21-520	1		
	21 531	HUB, OVERDRIVE CLUTCH	BU03-21-531	1		
	21 540	CARRIER, OVER DRIVE	BU03-21-540	1		
	21 560	GEAR, OVERDRIVE	BU03-21-560	1		
	21 565	CONNECTING, SHELL	BU03-21-565	1		
	21 567	RING, SNAP	BU03-21-567	1		
	21 631	RACE, BRG. HUB CLUTCH	BU01-21-631	1	(T=1.2)	
			BU01-21-632	1	(T=1.4)	
			BU01-21-633	1	(T=1.6)	
			BU01-21-634	1	(T=1.8)	
			BU01-21-635	1	(T=2.0)	
			BU01-21-636	1	(T=2.2)	
	21 679	SHAFT, INTERMEDIATE	BU01-21-679	1		

1940A-1 LOW, REVERSE & GOVERNOR (AUTOMATIC)

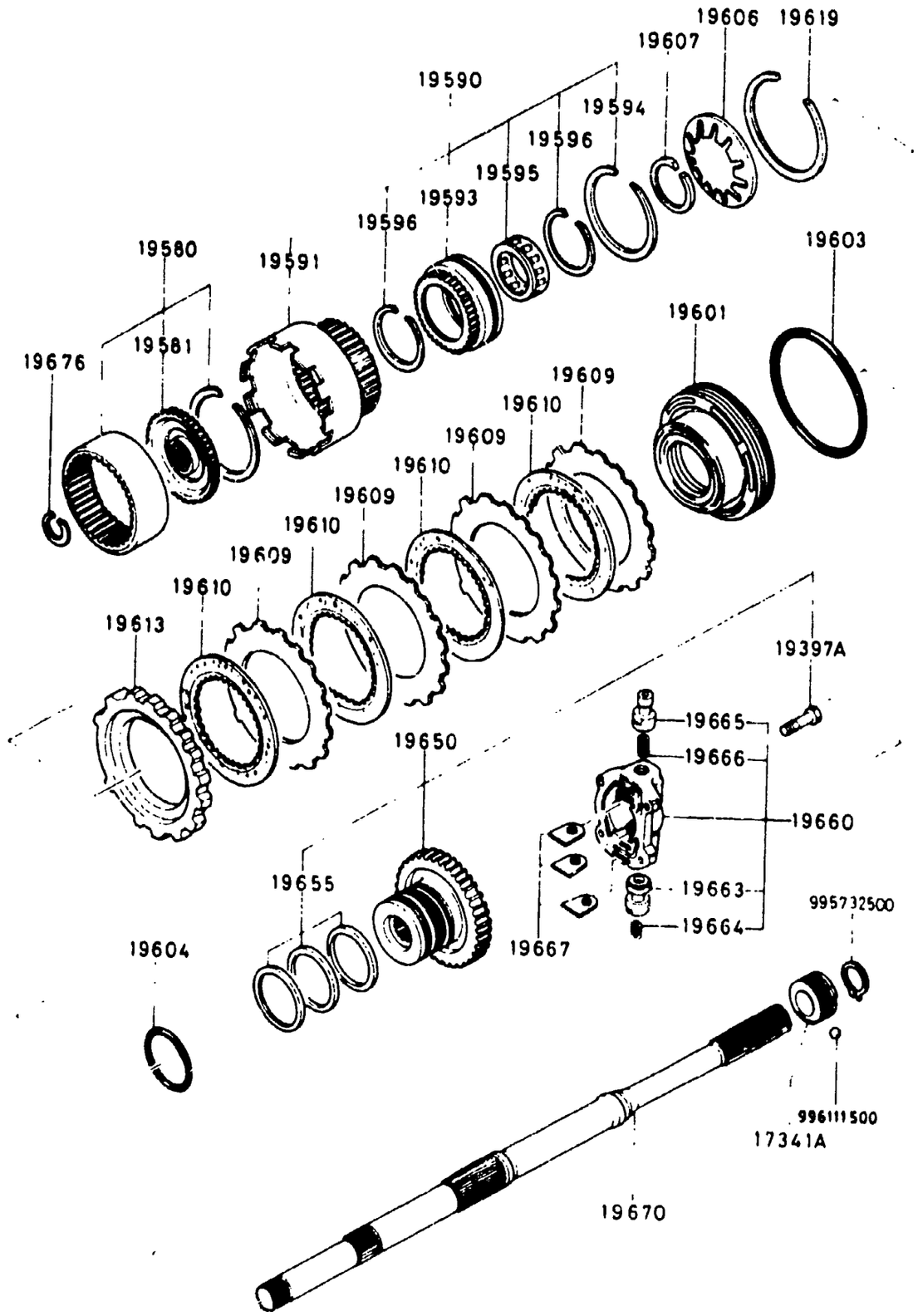

ITEM NO.	D-CODE	DESCRIPTION	PART NO.	QTY	MODEL/DESCRIPTION	REMARKS
	17 341A	GEAR, SPEEDO. DRIVE	3728-17-341A	1		
	19 397A	BOLT	0338-19-398	4		
	19 580	FLANGE	0338-19-580	1		
	19 581	FLANGE, DRIVE	0338-19-581	1		
	19 590	DRUM, CONNECTING	0338-19-590	1		
	19 591	DRUM, CONNECTING	0338-19-591	1		
	19 593	RACE, OUTER	0338-19-593	1		
	19 594	RING, SNAP	0338-19-594	1		
	19 595	CLUTCH, ONE-WAY	0338-19-595	1		
	19 596	RING, SNAP	0338-19-596	2		
	19 601	PISTON, LOW & REVERSE	BT08-19-600	1		
	19 603	SEAL, PISTON	0338-19-603	1		
	19 604	SEAL, O-RING	0338-19-604	1		
	19 606	SPRING, PISTON	0338-19-606	1		
	19 607	RING, SNAP	0338-19-607	1		
	19 609	PLATE, DRIVEN	0338-19-609	4		
	19 610	PLATE, DRIVE	0338-19-610A	4		
	19 613	PLATE, RETAINING	1758-19-613	1	(T=7.8)	
			1758-19-614	1	(T=8.0)	
			1758-19-615	1	(T=8.2)	
			1758-19-616	1	(T=8.4)	
			1758-19-617	1	(T=8.6)	
			1758-19-618	1	(T=8.8)	
	19 619	RING, SNAP	0338-19-619	1		
	19 650	DISTRIBUTOR, OIL	0842-19-650	1		
	19 655	RING, SEAL	0338-19-655	3		
	19 660	GOVERNOR	0842-19-660	1		
	19 663	VALVE	0338-19-663	1		
	19 664	SPRING	0338-19-664	1		
	19 665	VALVE	0842-19-665	1		
	19 666	SPRING, GOVERNOR	0338-19-666	1		
	19 667	PLATE, RETAINER	0338-19-667	3		
	19 670	SHAFT	BU06-19-670	1		
	19 676	RING	0338-19-676	1		

1950A-1 MANUAL LINKAGE (AUTOMATIC

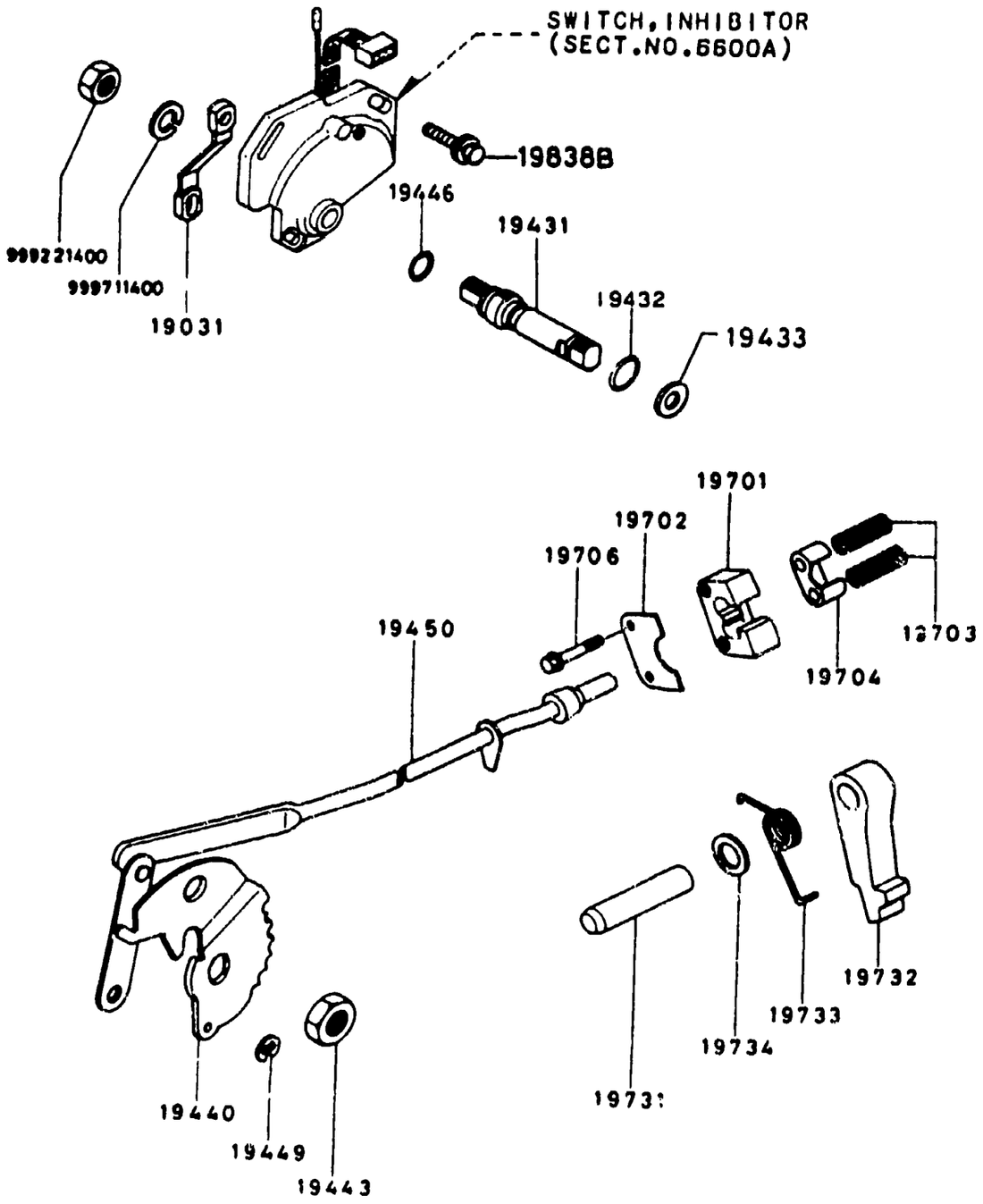

ITEM NO.	D-CODE	DESCRIPTION	PART NO.	QTY	MODEL/DESCRIPTION	REMARKS
	19 031	LEVER, SELECT	BU06-19-031	1		
	19 431	SHAFT, MANUAL	0338-19-431	1		
	19 432	O-RING	0338-19-432	1		
	19 433	WASHER	0338-19-433A	1		
	19 440	PLATE, MANUAL	0338-19-440	1		
	19 443	NUT, SHAFT	0338-19-443	1		
	19 446	O-RING	0338-19-446	1		
	19 449	RING, SNAP	0338-19-449	1		
	19 450	ROD, PARKING	0338-19-450A	1		
	19 701	SUPPORTER, ACTUATOR	0338-19-701A	1		
	19 702	PLATE, RETAINING	0338-19-702A	1		
	19 703	SPRING, BALL PARK	0338-19-703	2		
	19 704	RETAINER	0338-19-704	1		
	19 706	BOLT	0338-19-706	2		
	19 731	SHAFT, PARKING PAWL	0338-19-731	1		
	19 732	PAWL, PARKING	0338-19-732	1		
	19 733	SPRING, PAWL RETURN	0338-19-733C	1		
	19 734	SPACER, DOWEL	0338-19-734A	1		
	19 8388	BOLT	1758-19-838	2		

1960A-1 GASKET & SEAL KIT (AUTOMATIC)

22900

a-SEAL,"O"RING.....(3)
b-SEAL.....(3)
c-GASKET,DRUM SUPPORT....(1)
d-GASKET,DRIVE CASE.....(1)
e-SEAL,"O"RING.....(1)
f-SEAL,"O"RING.....(1)
g-RING,"O".....(1)
h-RING,"O".....(1)
i-SEAL,OIL.....(1)
j-RING,"O".....(1)
k-SEAL.....(1)
l-GASKET,OIL PUMP.....(1)
m-RING,"O".....(1)
n-RING,"O".....(1)
p-RING,"O".....(1)
q-SEAL,OIL.....(1)
r-SEAL,"O"RING.....(1)
s-SEAL,PISTON.....(1)
t-SEAL,"O"RING.....(2)
u-SEAL,PISTON.....(1)
v-SEAL,PISTON.....(1)
w-SEAL.....(1)
x-GASKET.....(1)
y-GASKET,OIL PAN.....(1)
z-RING,"O".....(1)
aa-RING,"O".....(1)
ab-RING,"O".....(1)
ac-RING,"O".....(2)
ad-GASKET,EXTENTION.....(1)

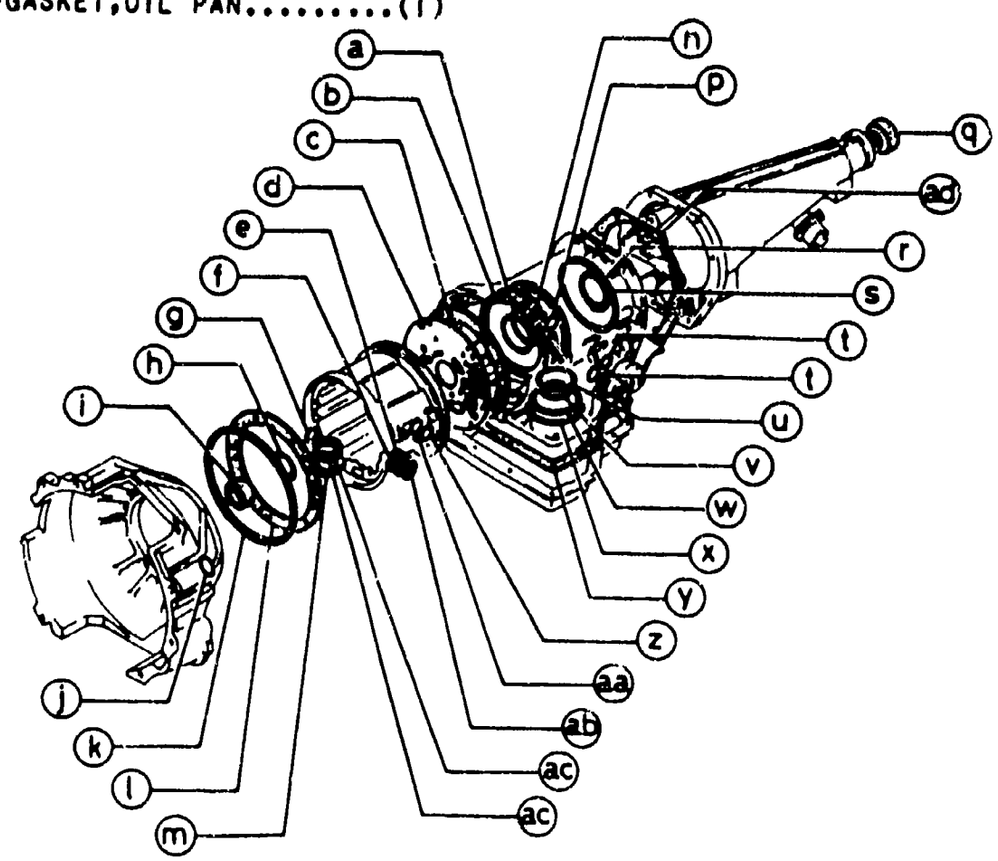

ITEM NO.	D-CODE	DESCRIPTION	PART NO.	QTY	MODEL/DESCRIPTION	REMARKS
	22 900	GASKET & SEAL KIT	BU01-99-190A	1		

ENGINE

CHASSIS

ENGINE

CHASSIS

ENGINE

CHASSIS

ENGINE

CHASSIS

ENGINE

CHASSIS

ENGINE

CHASSIS

ENGINE

CHASSIS

ENGINE

CHASSIS

ENGINE

CHASSIS

ENGINE

CHASSIS

ENGINE

CHASSIS

ENGINE

CHASSIS

ENGINE

CHASSIS

SECTION INDEX -- CHASSIS

STARTING LOCATION	SECT NO	SECTION NAME
1 - C 9	2500A	PROPELLER SHAFT
1 - D 9	2600A	REAR AXLE
1 - E 9	2610A	REAR BRAKES (DRUM) (S, GS)
1 - F 9	2610AA	REAR BRAKES (DISC) (GSL, GSL-SE)
1 - G 9	2700A	DIFFERENTIAL (REAR DRUM BRAKES) (S, GS)
1 - I 9	2700AA	DIFFERENTIAL (REAR DISC BRAKES) (GSL, GSL-SE)
1 - K 9	2800A	REAR SUSPENSION
1 - L 9	2810A	REAR STABILIZER
1 - M 9	3200A	STEERING WHEEL
1 - N 9	3210A	STEERING COLUMN & GEAR
1 - C10	3230A	STEERING LINKAGE
1 - D10	3240A	POWER STEERING SYSTEM
1 - E10	3300A	FRONT AXLE & BRAKES
1 - F10	3400A	FRONT SUSPENSION
1 - G10	3410A	CROSSMEMBER & STABILIZER
1 - H10	3700A	TIRE & JACK
1 - K10	3900A	ENGINE & TRANSMISSION MOUNTINGS
1 - L10	4000A	EXHAUST SYSTEM
1 - N10	4140A	CLUTCH RELEASE & MASTER CYLINDERS (M T)
1 - C11	4160A	ACCELERATOR CONTROLS
1 - D11	[illegible]	[illegible] TANK
1 - E11	4300A	CLUTCH & BRAKE PEDALS
1 - F11	4340A	BRAKE MASTER CYLINDER & POWER BRAKE (REAR DRUM BRAKES) (S, GS)
1 - G11	4340AA	BRAKE MASTER CYLINDER & POWER BRAKE (REAR DISK BRAKES) (GSL, GSL-SE)
1 - H11	4360A	BRAKE PIPING (REAR DRUM BRAKE) (S, GS)
1 - I11	4360AA	BRAKE PIPING (REAR DISC BRAKE) (GSL, GSL-SE)
1 - J11	4400A	PARKING BRAKE SYSTEM
1 - L11	4500A	FUEL PIPINGS
1 - N11	4600A	CHANGE CONTROLS (A T)

2500A-1 · PROPELLER SHAFT

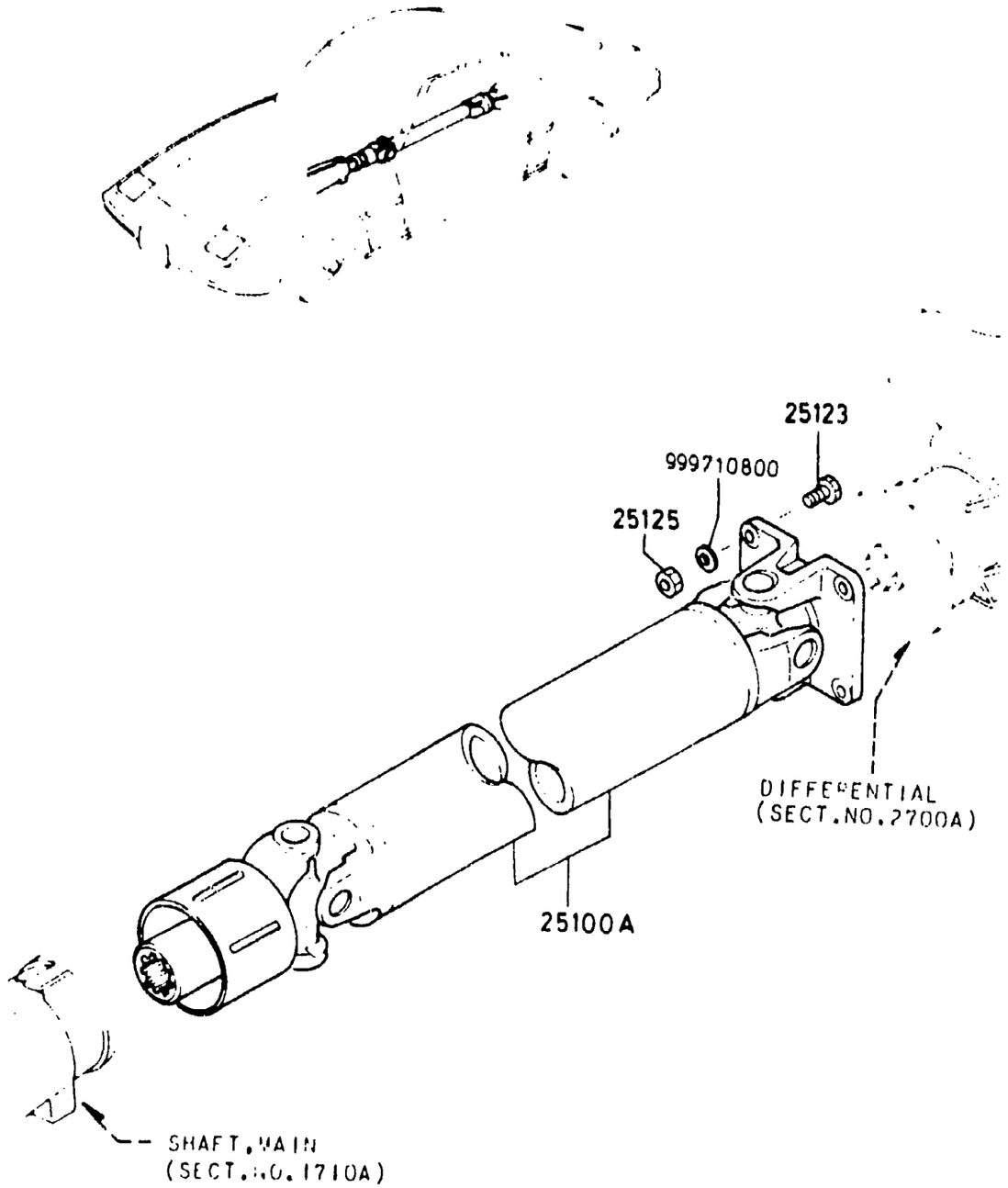

ITEM NO.	D-CODE	DESCRIPTION	PART NO	QTY	MODEL/DESCRIPTION	REMARKS
	25 100A	SHAFT, PROPELLER	M026-25-100	1	M/T	
			M041-25-100	1	A/T	
	25 123	BOLT	1456-25-123	4		
	25 125	NUT	1456-25-125	4		

2600A-1 REAR AXLE

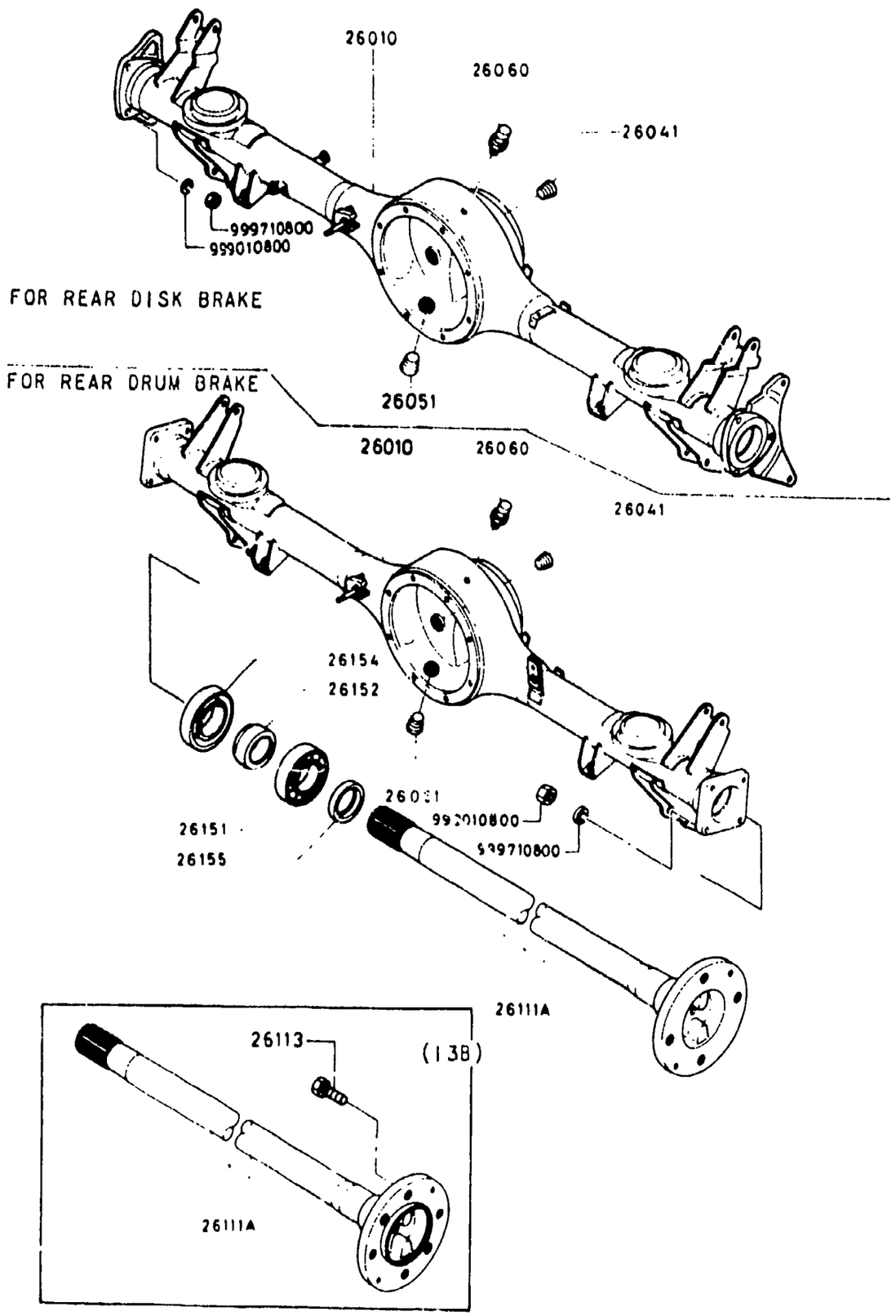

ITEM NO.	D-CODE	DESCRIPTION	PART NO.	QTY	MODEL/DESCRIPTION	REMARKS
	26 010	CASING, REAR AXLE	FA54-26-020	1	(FOR REAR DRUM BRAKE) (S, GS)	
			FA58-26-020	1	(FOR REAR DISC BRAKE) (GSL, GSL-SE)	
	26 041	PLUG, OIL LEVEL	0259-26-041A	1		
	26 051	PLUG, MAGNET DRAIN	0259-26-051	1		
	26 060	BREATHER	0366-26-060	1		
	26 111A	SHAFT, REAR AXLE	FA54-26-111	2	12A (S, GS, GSL)	
			FA66-26-111	2	13B (GSL-SE)	
	26 113	BOLT	8595-26-113	8	13B (GSL-SE)	
	26 151	BEARING	8595-26-151	2		
	26 152	COLLAR, BEARING	8545-26-152	2		
	26 154	SEAL, OIL	1011-26-154	2		
	26 155	SPACER, BEARING	FA66-26-155	2		

2610A-1 REAR BRAKES (DRUM) (S, GS)

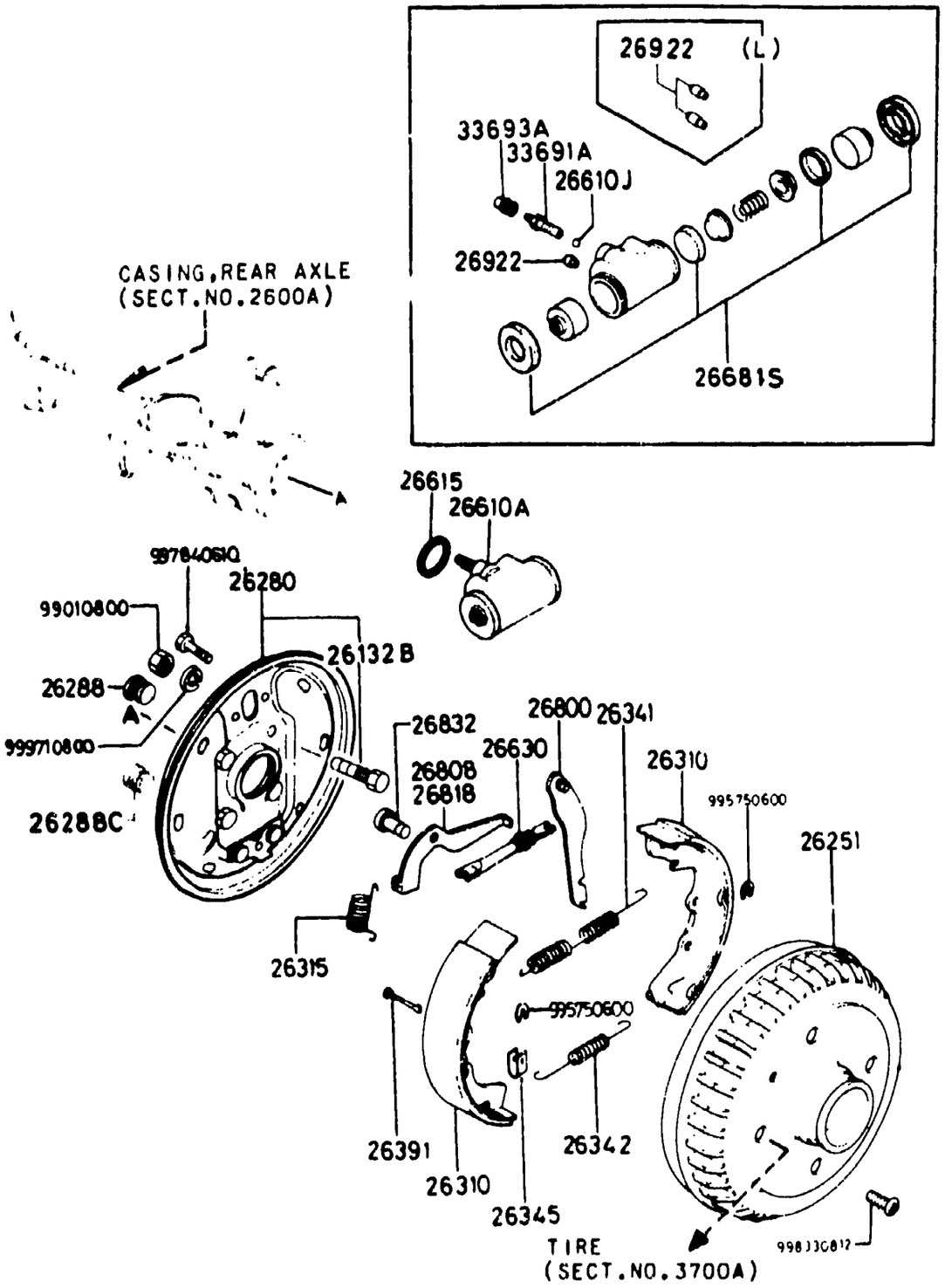

ITEM NO.	D-CODE	DESCRIPTION	PART NO.	QTY	MODEL/DESCRIPTION	REMARKS
	26 132B	BOLT	3728-26-132	8		
	26 251	DRUM, BRAKE	FA01-26-251	2		
	26 280	PLATE (R), BRAKE BACK	FA54-26-280	1		
		PLATE (L), BRAKE BACK	FA54-26-290	1		
	26 288	PLUG, BACK PLATE	0710-26-288	2		
	26 288C	PLUG	3648-26-288	2		
	26 310	BRAKE SHOE SET	FA01-26-38Z	1		
	26 315	SPRING, BRAKE BACK	GA02-26-315	2		
	26 341	SPRING, RETURN-UPPER	FA01-26-341	2		
	26 342	SPRING, RETURN-LOWER	1011-26-342	2		
	26 345	SPRING, BRAKE SHOE	FA01-26-345	4		
	26 391	PIN, BRAKE SHOE	FA01-26-391	4		
	26 610A	CYLINDER (R), WHEEL	FA01-26-610A	1		
		CYLINDER (L), WHEEL	FA01-26-710A	1		
	26 610J	BALL, STEEL	9961-11-500	1		
	26 615	GASKET, WHEEL CYLINDER	1175-26-615	2		
	26 630	ADJUSTER (R)	FA01-26-630	1		
		ADJUSTER (L)	FA01-26-640	1		
	26 681S	BOOT SET	BB62-89-334	1		
	26 800	LEVER (R), OPERATING	FA01-26-800	1		
		LEVER (L), OPERATING	FA01-26-810	1		
	26 808	LEVER (R), PAWL	FA01-26-808	1		
	26 818	LEVER (L), PAWL	FA01-26-818	1		
	26 832	PIN (R)	FA01-26-832	1		
		PIN (L)	GA02-26-832	1		
	26 922	SHEET, TUBE	0613-26-922	3		
	33 691A	SCREW, BLEEDER	0259-33-691	1		
	33 693A	CAP, BLEEDER SCREW	0259-33-693	2		

2610AA-1 REAR BRAKES (DISC) (GSL, GSL-SE)

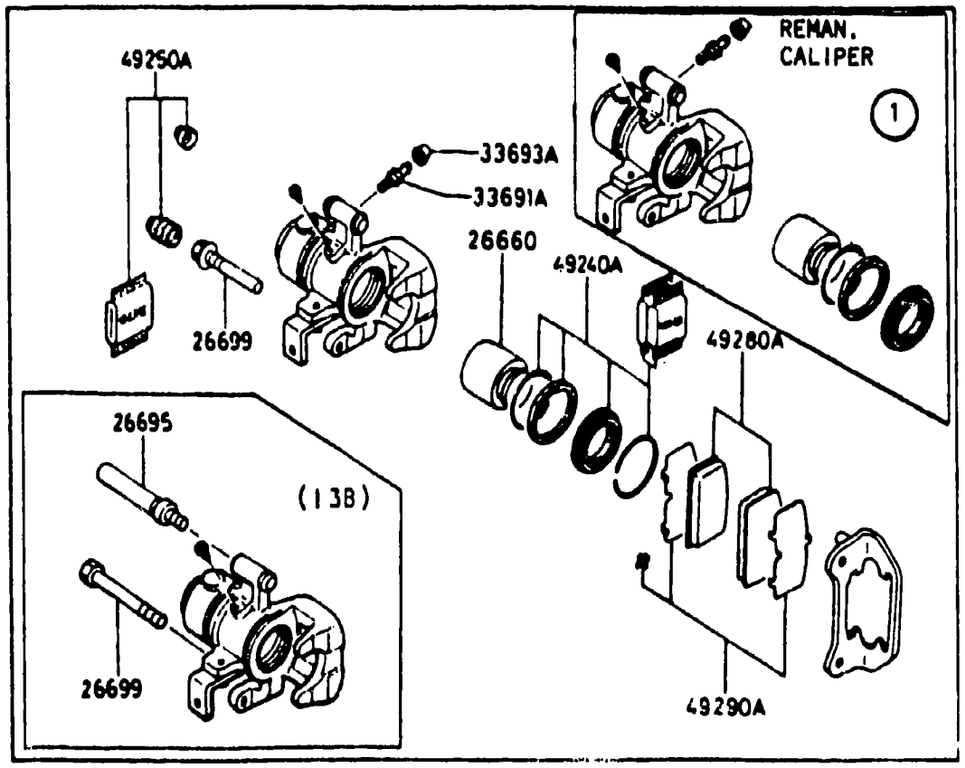

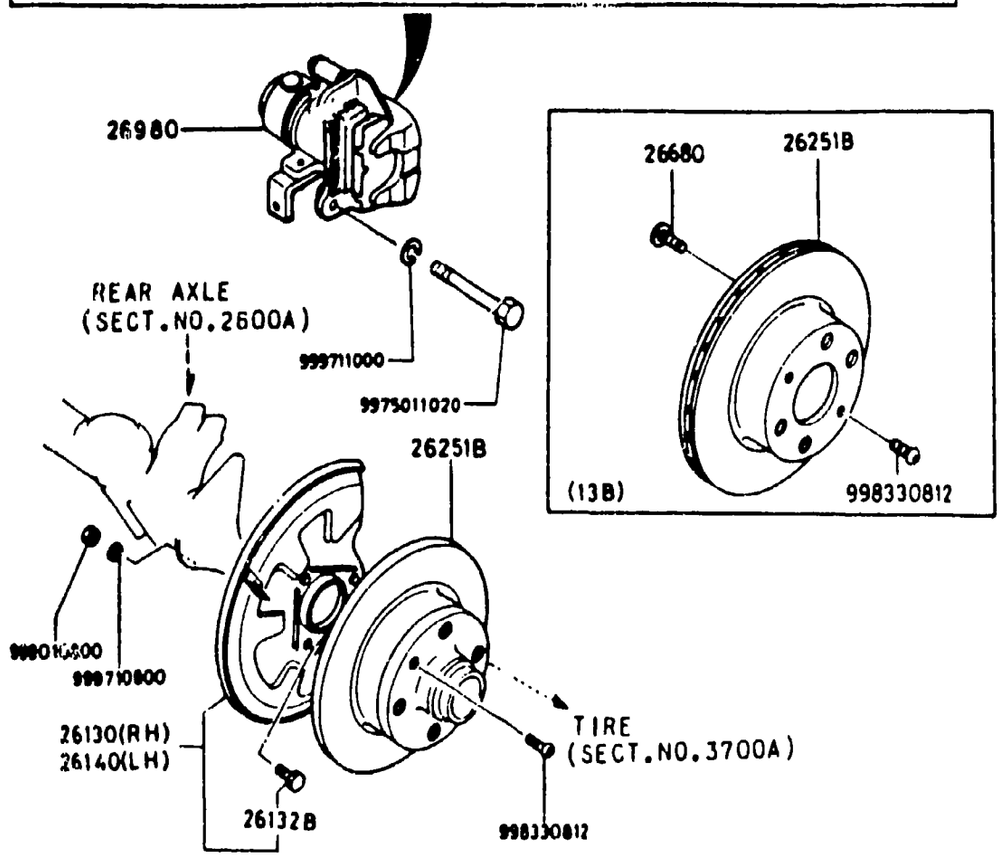

ITEM NO.	D-CODE	DESCRIPTION	PART NO.	QTY	MODEL/DESCRIPTION	REMARKS
1		CALIPER (R), REAR BRAKE	FA18-26-610R	1	12A (GSL) REBUILT	
1		CALIPER (L), REAR BRAKE	FA18-26-710R	1	12A (GSL) REBUILT	
	26 130	COVER, DUST (R)	FA58-26-130	1	12A (GSL)	
			FA66-26-130	1	13B (GSL-SE)	
	26 132B	BOLT	3728-26-132	6		
	26 140	COVER, DUST (L)	FA58-26-140	1	12A (GSL)	
			FA66-26-140	1	13B (GSL-SE)	
	26 251B	PLATE, DISC	FA18-26-251	2	12A (GSL)	
			FA66-26-251	2	13B (GSL-SE)	
	26 660	PISTON	FA18-26-660A	2		
	26 680	BOLT	FA18-26-680	2		
	26 695	PIN, GUIDE	FA66-26-695	1	13B (GSL-SE)	
	26 699	BOLT	FA18-26-699	1	12A (GSL)	
			FA66-26-998	1	13B (GSL-SE)	
	26 980	CALIPER (R), REAR BRAKE	FA18-26-980B	1	12A (GSL)	
			FA66-26-980	1	13B (GSL-SE)	
		CALIPER (L), REAR BRAKE	FA18-26-990B	1	12A (GSL)	
			FA66-26-990	1	13B (GSL-SE)	
	33 691A	SCREW, BLEEDER	0233-33-691	1		
	33 693A	CAP, BLEEDER SCREW	0259-33-693	2		
	49 240A	SEAL KIT	FA18-49-240	1	12A (GSL)	
			FA67-49-240	1	13B (GSL-SE)	
	49 250A	BOOT KIT	FA18-49-250	1	12A (GSL)	
	49 280A	PAD SUB SET, REAR	FA18-49-280A	1	12A (GSL)	
			FA67-49-280	1	13B (GSL-SE)	
	49 290A	ATTACHMENT-PAD	FA18-49-290	1	12A (GSL)	
			FA67-49-290A	1	13B (GSL-SE)	

2700A-1 DIFFERENTIAL (REAR DRUM BRAKES) (S, GS)

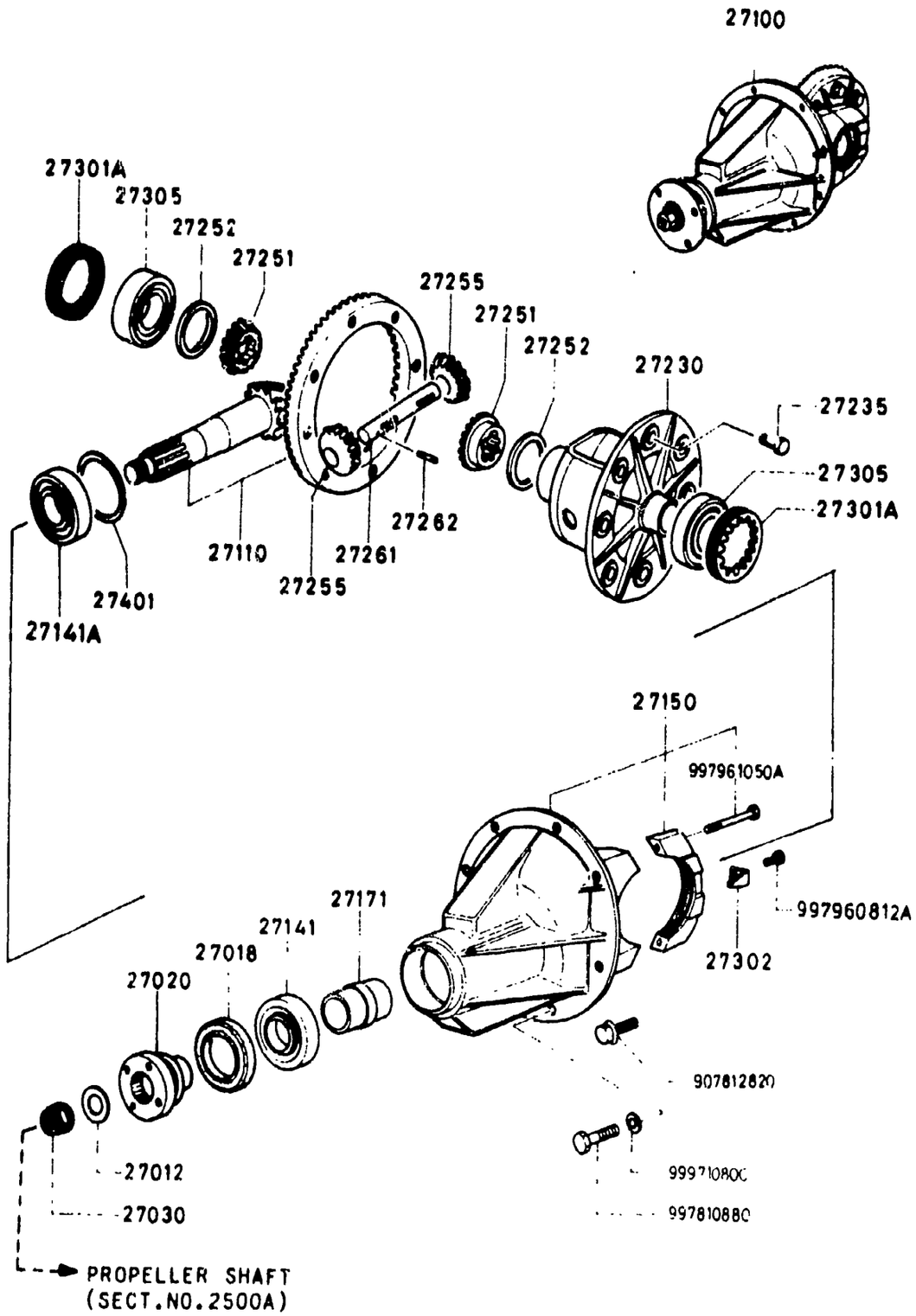

SEE PARTS BULLETIN FOR MORE DIFFERENTIAL INFO.
MMAC N/A
MMAE V/26

ITEM NO.	D-CODE	DESCRIPTION	PART NO.	QTY	MODEL/DESCRIPTION	REMARKS
	27 012	WASHER	0223-27-012	1		
	27 018	SEAL, OIL	M005-27-165	1		
	27 020	FLANGE, COMPANION	M005-27-120A	1		
	27 030	NUT, LOCK	0223-27-030	1		
	27 100	DRIVE & DIFFERENTIAL	M062-27-100	1		
	27 110	GEAR SET, FINAL	M050-27-110C	1	(RATIO=3.933) THRU APR. '84 PROD.	FB33* ..800001-831595
			8051-27-110D	1	(RATIO=3.909) FROM MAY '84 PROD.	FB33* ..831596-
	27 141	BEARING, PINION-FRONT	0755-27-210	1		
	27 141A	BEARING, PINION-REAR	0221-27-210	1		
	27 150	CARRIER, DIFFERENTIAL	0820-27-150C	1	THRU JAN. '85 PROD	FB33* ..800001-884108
			0820-27-150D	1	FROM FEB. '85 PROD.	FB33* ..884109-
	27 171	PIECE, DISTANCE	0305-27-171	1		
	27 230	CASE	M024-27-231	1		
	27 235	BOLT, RING GEAR	8051-27-235	10	(D=10.0)	
			8051-27-236	10	(D=10.2)	
	27 251	GEAR, DIFF. SIDE	M035-27-251A	2		
	27 252	WASHER	0290-27-252	2	(T=2.0)	
			0290-27-253	2	(T=2.1)	
			0290-27-254	2	(T=2.2)	
			0290-27-256	2	(T=2.05)	
			0290-27-259	2	(T=2.15)	
	27 255	PINION, DIFFERENTIAL	M025-27-255B	2		
	27 261	SHAFT, DIFF. PINION	M025-27-261A	1		
	27 262	PIN	0114-27-262	1		
	27 301A	SCREW, ADJUST	0290-27-301	2		
	27 302	PLATE, LOCK	0290-27-302	2		
	27 305	BEARING	0221-27-350	2		
	27 401	SPACER	0223-27-401A	1	(T=3.08)	
			0223-27-402A	1	(T=3.11)	
			0223-27-403A	1	(T=3.14)	
			0223-27-404A	1	(T=3.17)	
			0223-27-405A	1	(T=3.20)	
			0223-27-406A	1	(T=3.23)	
			0223-27-407A	1	(T=3.26)	
			0223-27-408A	1	(T=3.29)	
			0223-27-409A	1	(T=3.32)	
			0223-27-411A	1	(T=3.35)	
			0223-27-412A	1	(T=3.38)	
			0223-27-413A	1	(T=3.41)	

2700A-2 DIFFERENTIAL (REAR DRUM BRAKES) (S, GS)

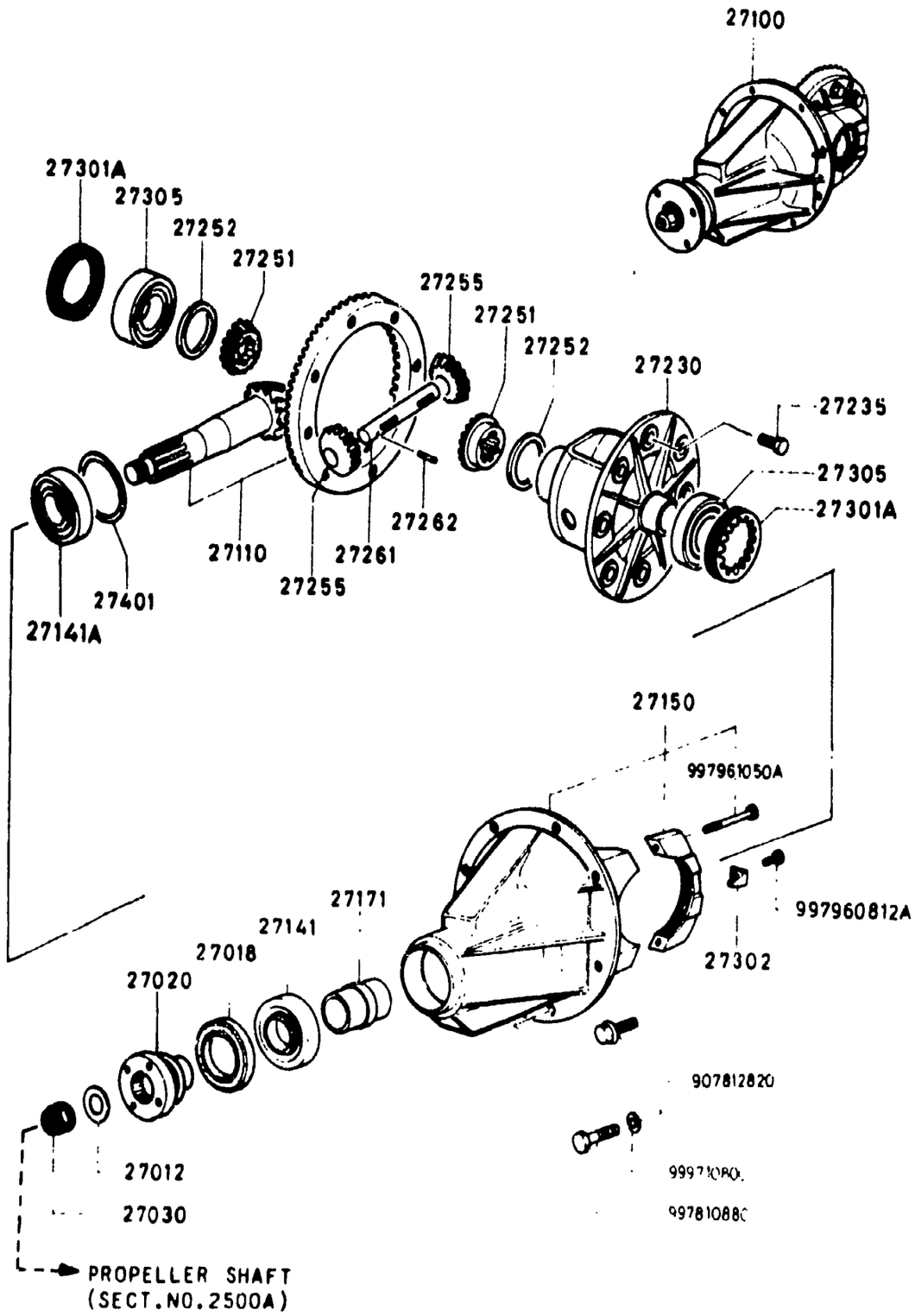

SEE PARTS BULLETIN FOR MORE DIFFERENTIAL INFO.
MMAC N/A
MMAE V/26

ITEM NO.	D-CODE	DESCRIPTION	PART NO.	QTY	MODEL/DESCRIPTION	REMARKS
	27 401 (CONT'D)		0223-27-414A	1	(T=3.44)	
			0223-27-415A	1	(T=3.47)	

2700AA-1 DIFFERENTIAL (REAR DISC BRAKES) (GSL, GSL-SE)

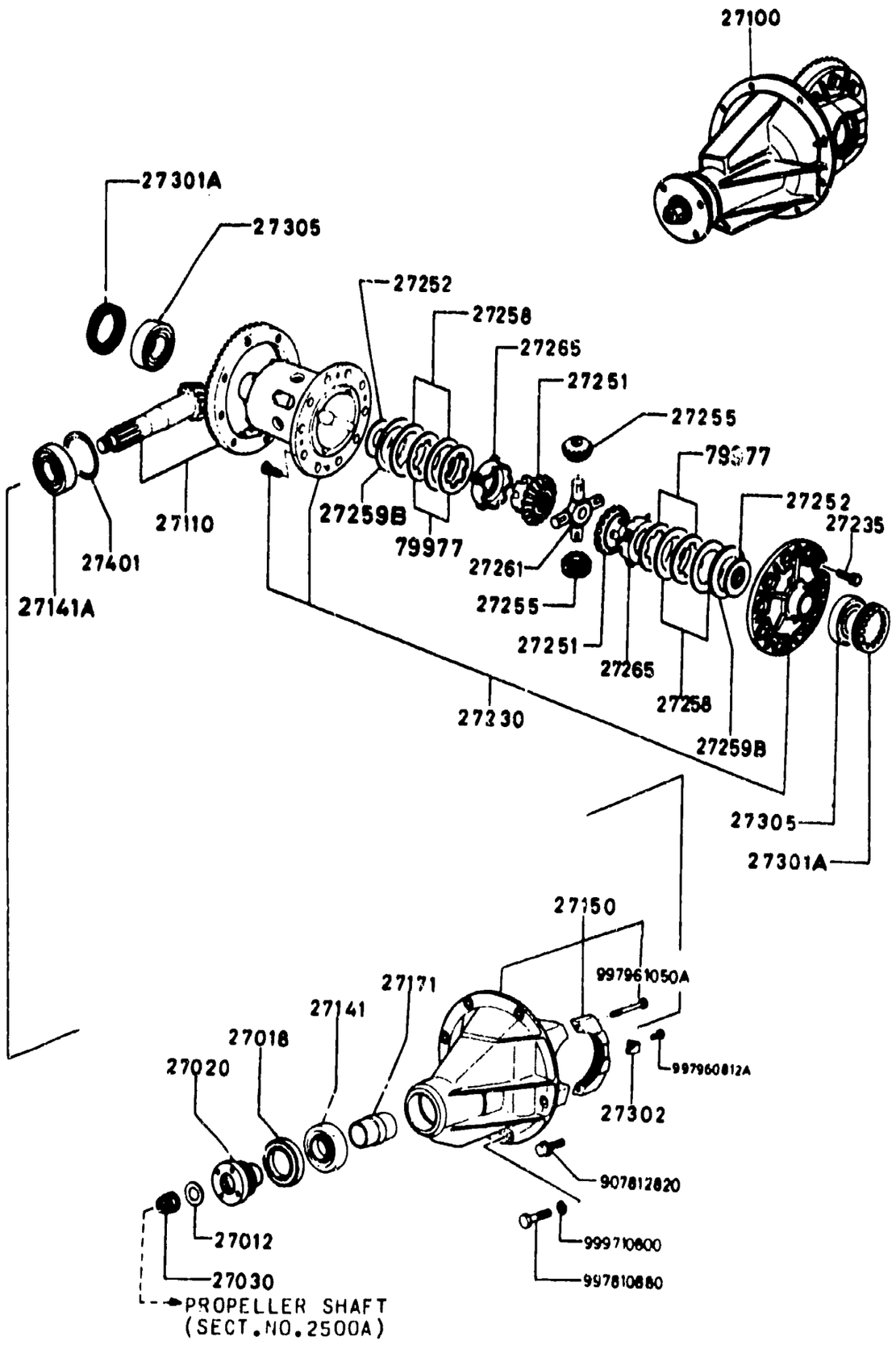

ITEM NO.	D-CODE	DESCRIPTION	PART NO.	QTY	MODEL/DESCRIPTION	REMARKS
	27 012	WASHER	0223-27-012	1		
	27 018	SEAL, OIL	M005-27-165	1		
	27 020	FLANGE, COMPANION	M005-27-120D	1		
	27 030	NUT, LOCK	0223-27-030	1		
	27 100	DRIVE & DIFFERENTIAL	M098-27-100	1	12A (GSL)	
			M090-27-100B	1	13B (GSL-SE) THRU NOV. '84 PROD.	FB33* ..800001-873902
		<A>	M090-27-100C	1	13B (GSL-SE) FROM DEC. '84 PROD.	FB33* ..873903-
	27 110	GEAR SET, FINAL	M050-27-110C	1	12A (GSL) (RATIO=3.933) THRU APR. '84 PROD.	FB33* ..800001-831595
			8051-27-110D	1	12A (GSL) (RATIO=3.909) FROM MAY '84 PROD.	FB33* ..831596-
			M090-27-110A	1	13B (GSL-SE) (RATIO=4.076) THRU NOV. '84 PROD.	FB33* ..800001-873902
			M037-27-110B	1	13B (GSL-SE) (RATIO=3.909) FROM DEC. '84 PROD.	FB33* ..873903-
	27 141	BEARING, PINION-FRONT	0755-27-210	1		
	27 141A	BEARING, PINION-REAR	0221-27-210	1		
	27 150	CARRIER, DIFFERENTIAL	0820-27-150C	1	THRU DEC. '84 PROD.	FB33* ..800001-884108
			0820-27-150D	1	FROM JAN. '85 PROD.	FB33* ..884109-
	27 171	PIECE, DISTANCE	0305-27-171	1		
	27 230	CASE	M020-27-230	1		
	27 235	BOLT, RING GEAR	8051-27-235	10	(D=10.0)	
			8051-27-236	10	(D=10.2)	
	27 251	GEAR, DIFF. SIDE	M050-27-251	2		
	27 252	WASHER	M020-27-252	2	(T=1.60)	
			M020-27-253	2	(T=1.80)	
	27 255	PINION, DIFFERENTIAL	M020-27-255	4		
	27 258	PLATE, FRICTION	M020-27-258	4		
	27 259B	SPRING, CONICAL	M020-27-259	2		
	27 261	SHAFT, DIFF. PINION	M020-27-261	1		
	27 265	RING, PRESSURE	M020-27-265	2		
	27 301A	SCREW, ADJUST	0290-27-301	2		
	27 302	PLATE, LOCK	0290-27-302	2		
	27 305	BEARING	0221-27-350	2		
	27 401	SPACER	0223-27-401A	1	(T=3.08)	
			0223-27-402A	1	(T=3.11)	
			0223-27-403A	1	(T=3.14)	
			0223-27-404A	1	(T=3.17)	
			0223-27-405A	1	(T=3.20)	

2700AA-2 DIFFERENTIAL (REAR DISC BRAKES) (GSL, GSL-SE)

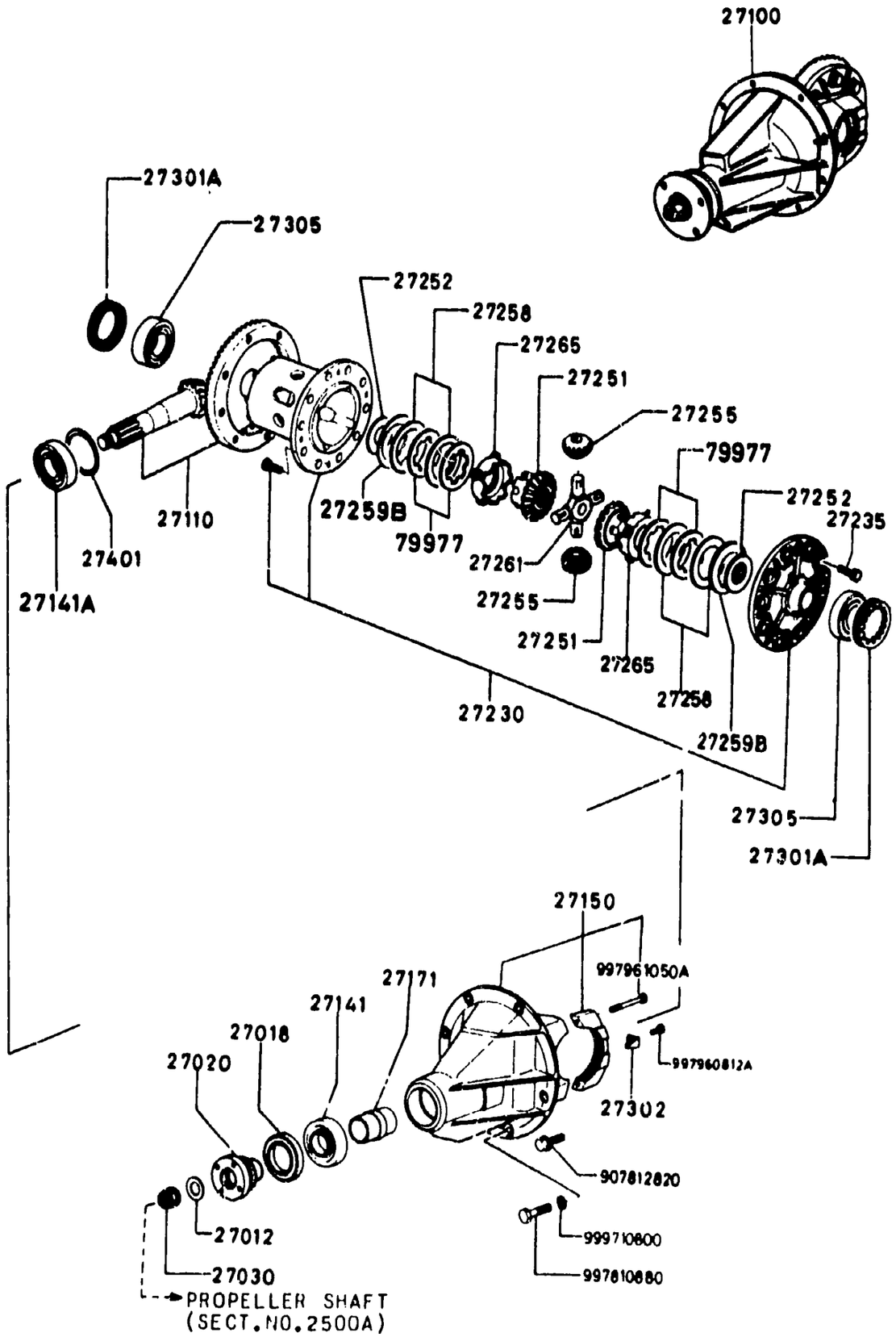

ITEM NO.	D-CODE	DESCRIPTION	PART NO.	QTY	MODEL/DESCRIPTION	REMARKS
	27 401 (CONT'D)		0223-27-406A	1	(T=3.23)	
			0223-27-407A	1	(T=3.26)	
			0223-27-408A	1	(T=3.29)	
			0223-27-409A	1	(T=3.32)	
			0223-27-411A	1	(T=3.35)	
			0223-27-412A	1	(T=3.38)	
			0223-27-413A	1	(T=3.41)	
			0223-27-414A	1	(T=3.44)	
			0223-27-415A	1	(T=3.47)	
	79 977	DISC, FRICTION	M020-27-256	4	(T=2.00)	
			M020-27-257	4	(T=2.10)	

2800A-1 REAR SUSPENSION

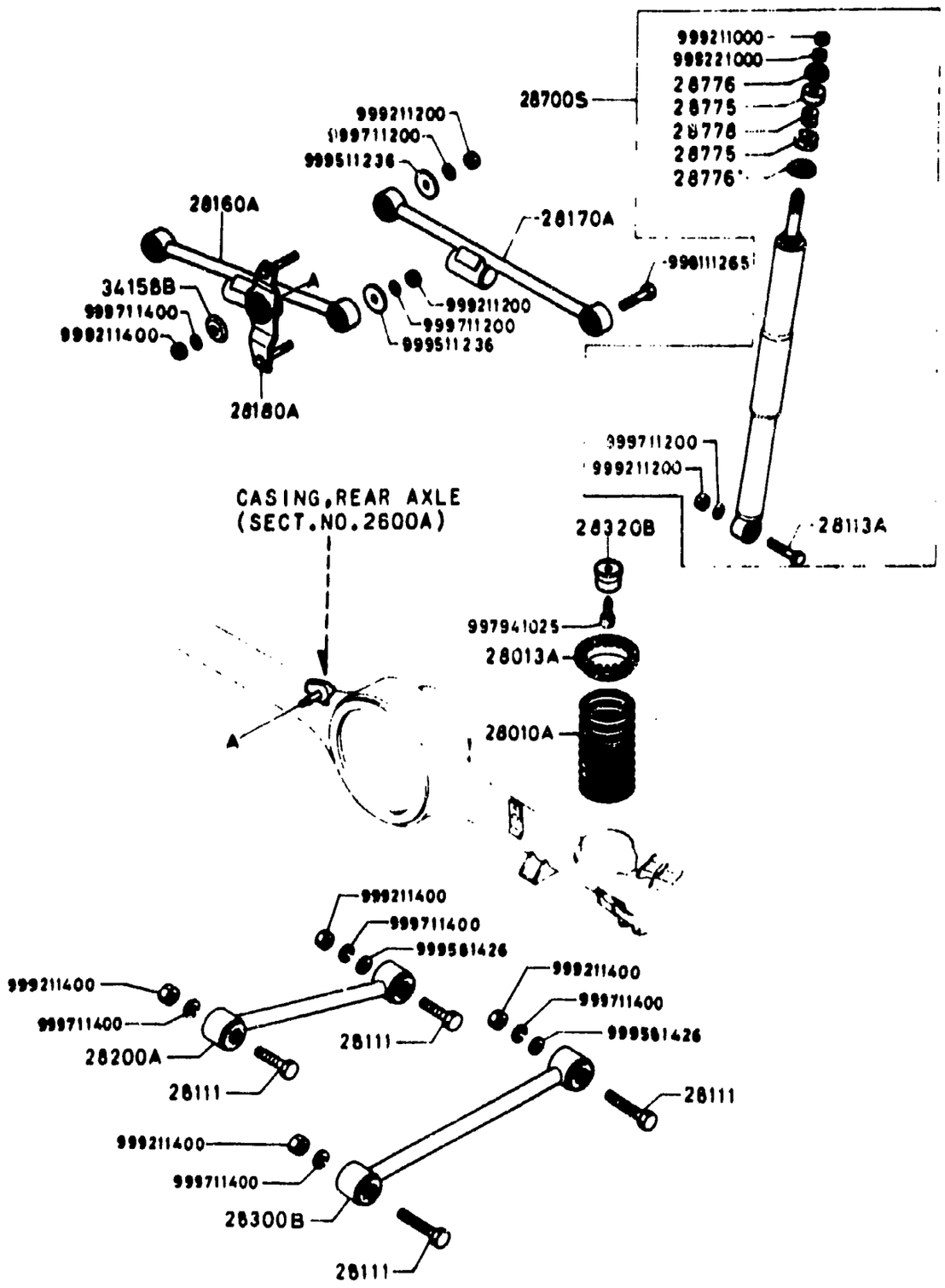

ITEM NO.	D-CODE	DESCRIPTION	PART NO.	QTY	MODEL/DESCRIPTION	REMARKS
	28 010A	SPRING, COIL	FA24-28-011	2		
	28 013A	SHEET, RUBBER	8871-28-013C	2		
	28 111	BOLT	0305-28-111B	8		
	28 113A	BOLT	1243-28-111	2		
	28 160A	LINK (R), WATT	8871-28-160	1		
	28 170A	LINK (L), WATT	8871-28-170	1		
	28 180A	BRACKET, WATT LINK	8871-28-180	1		
	28 200A	LINK	8871-28-200	2		
	28 300B	LINK, LOWER	8871-28-300A	2		
	28 320B	STOPPER, BUMP	8871-28-320	2	12A (S, GS, GSL)	
			FA66-28-320A	1	13B (GSL-SE)	
	28 700S	DAMPER SET, REAR	FA01-99-281A	2	12A (S, GS, GSL)	
			FA24-99-281	2	13B (GSL-SE)	
	28 775	BUSHING, RUBBER	8871-28-775	4		
	28 776	RETAINER	0223-28-776	4		
	28 778	GROMMET	0259-28-778	2		
	34 158B	WASHER	0866-34-158	1		

2810A-1 REAR STABILIZER

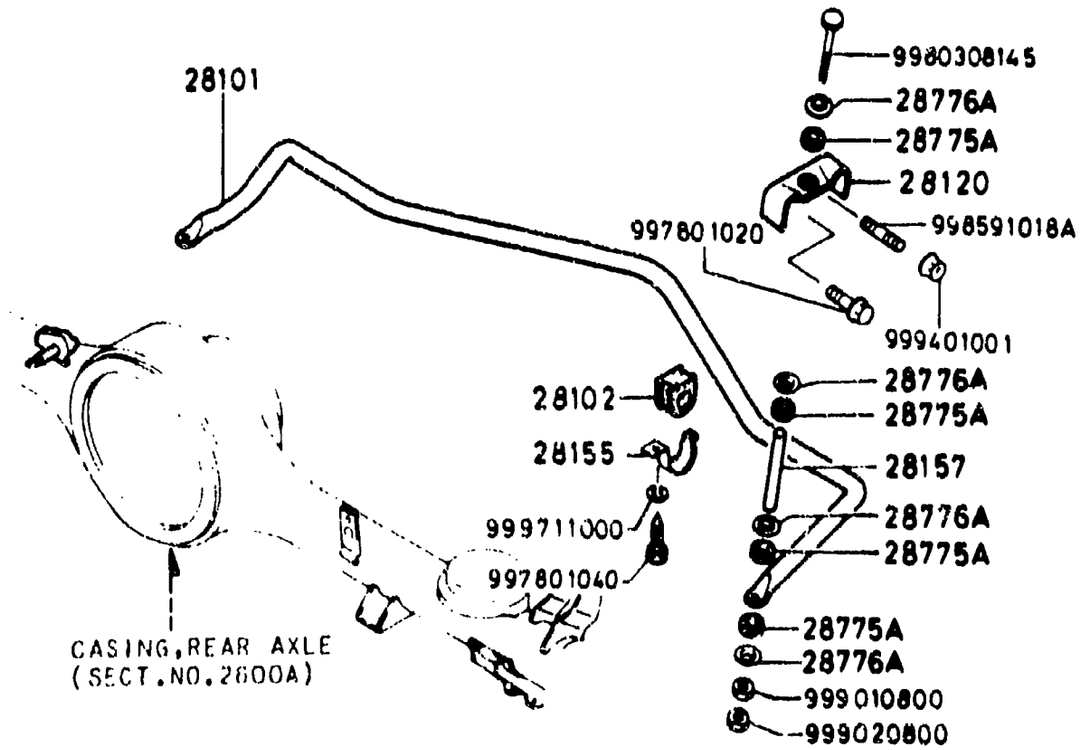

ITEM NO.	D-CODE	DESCRIPTION	PART NO	QTY	MODEL/DESCRIPTION	REMARKS
	28 101	STABILIZER	FA01-28-151	1	(D=15MM)	
				1	(D=17MM)	
	28 102	BUSHING, RUBBER	FA01-28-156	2	(FOR D=15MM STAB.)	
			8871-28-156	2	(FOR D=17MM STAB.)	
	28 120	BRACKET, CONTROL LINK	FA01-28-120B	2		
	28 155	BRACKET, STAB. SUPPORT	FA01-28-155	2		
	28 157	SPACER, STAB.	8871-28-157	2		
	28 775A	BUSHING, RUBBER - STAB.	0710-28-775	8		
	28 776A	RETAINER, STAB.	0710-28-776	8		

3200A-1 STEERING WHEEL

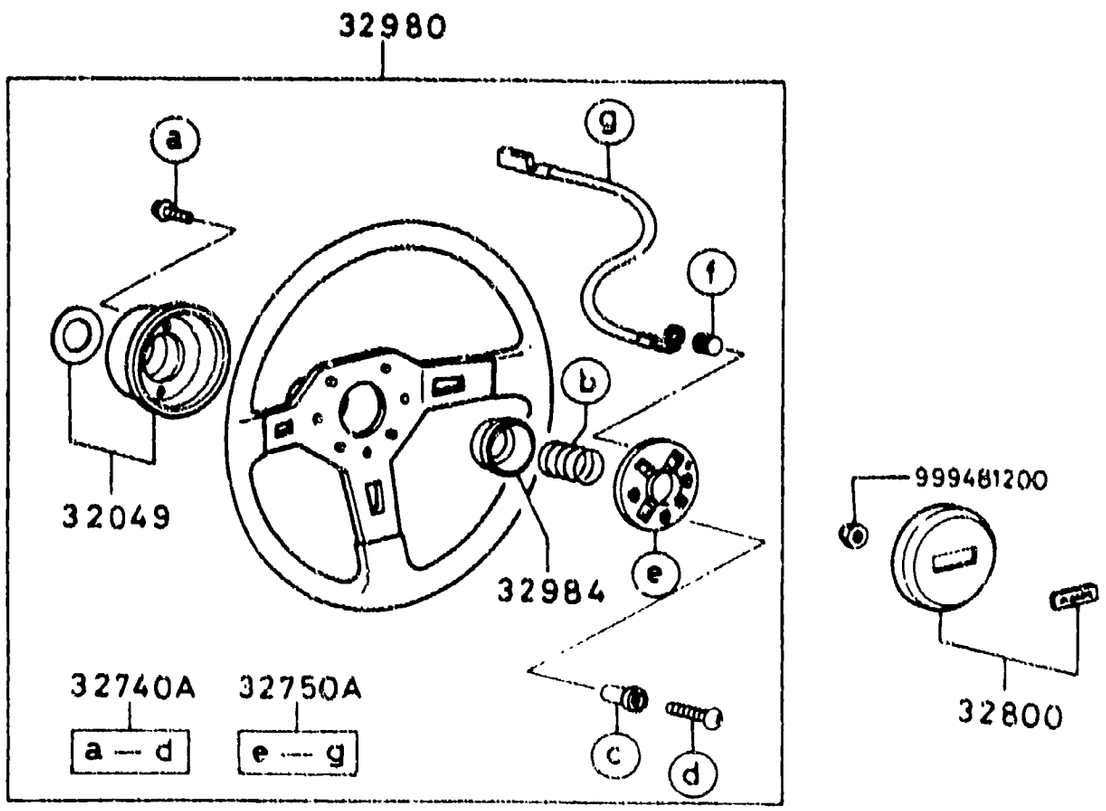

ITEM NO	D-CODE	DESCRIPTION	PART NO	QTY	MODEL/DESCRIPTION	REMARKS
	32 049	COVER, WHEEL CORE	FA54-32-760	1		
		RED	10			
		OFF BLACK	65			
		BROWN	78			
	32 740A	SET-SCREW	FA54-32-740	1		
	32 750A	SET-HORN	8871-32-750	1		
	32 800	CAP, HORN	FA64-32-800A	1		
		RED	10			
		OFF BLACK	65			
		BROWN	78			
	32 980	BOSS, STEERING WHEEL	FA54-32-980	1	(URETHANE)	
		RED	10			
		OFF BLACK	65			
		BROWN	78			
			FA55-32-980A	1	(LEATHER)	
		RED	12			
		OFF BLACK	65			
		BROWN	78			
	32 984	SET-CUP	8871-32-984	1		

3210A-1 STEERING COLUMN & GEAR

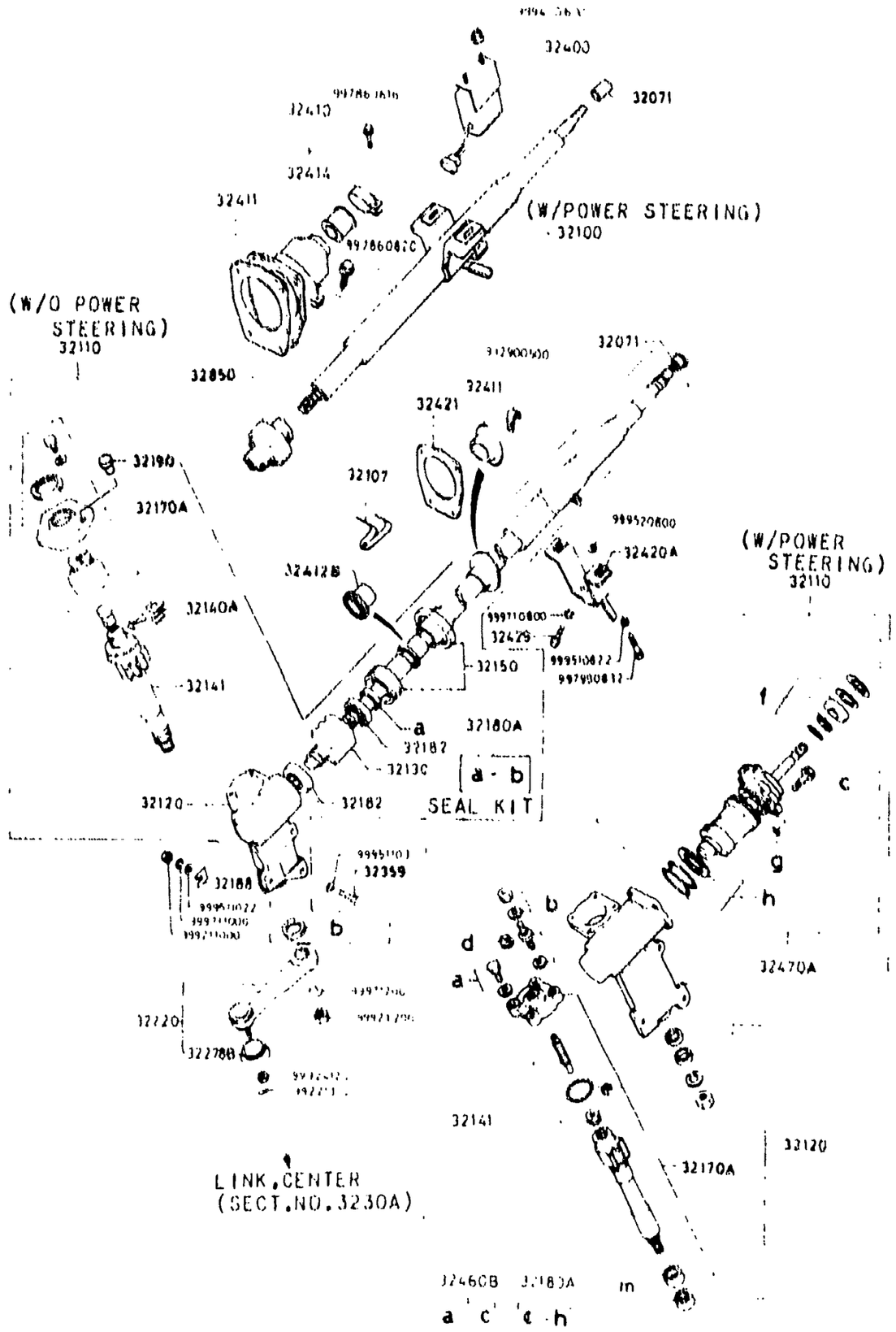

ITEM NO	D-CODE	DESCRIPTION	PART NO	QTY	MODEL/DESCRIPTION	REMARKS
	32 071	BUSHING	8001-32-071	1	(W/ P/S)	
			8182-32-071A	1	(W/O P/S)	
	32 100	SHAFT, ENGY. ABSORBER	FA55-32-100C	1		
	32 107	CLIP	8871-32-862	1	(W/O P/S)	
	32 110	GEAR, STEERING	FA54-32-110	1	(W/O P/S)	
			FA55-32-110	1	(W/ P/S)	
	32 120	HOUSING, GEAR	FA24-32-120	1	(W/O P/S)	
			FA55-32-120	1	(W P/S)	
	32 130	BALL NUT, WORM	FA24-32-130	1	(W/O P/S)	
	32 140A	SHIM KIT, ADJUST	8180-32-140	1	(W O P S)	
	32 141	SHAFT, SECTOR	FA24-32-141A	1	(W/O P/S)	
			FA55-32-140	1	(W/ P S)	
	32 150	COVER KIT, END	FA24-32-150	1	(W/O P S)	
	32 170A	COVER KIT, SIDE	FA24-32-170	1	(W/O P S)	
			FA55-32 160	1	(W/ P/S)	
	32 180A	SEAL KIT	FA55-32-180	1	(W P/S)	
			8871-32-180	1	(W O P S)	
	32 182	BEARING	8871-32-182	2	(W/O P S)	
	32 188	SHIM, ADJUST	0208-32-188	2		
	32 190	PLUG, OIL	0820-32-190	1	(W O P S)	
	32 220	ARM, PITMAN	1757-32-220	1		
	32 278B	SEAL, DUST-PITMAN	8545-32-278	1		
	32 359	BOLT, GEAR HOUSING	8173-32-359	3		
	32 400	CONTROLLER	FA55-32-400C	1	(W P S)	
	32 410	PLATE	FA55-32-410B	1	(W P S)	
	32 411	COVER, DUST	FA55-32-411	1	(W P S)	
			8871-32-411	1	(W O P S)	
	32 412B	BUSHING	8871-32-412	1	(W P S)	
	32 414	BUSHING	1011-32-414A	1	(W P S)	
	32 420A	BRACKET, FIXING	FA24-32 420	1	(W O P S)	
	32 421	PLATE, SET	FA54-32-421	1	(W O P S)	
	32 429	BOLT	8871-32-429A	4	(W O P S)	
	32 460B	BOLT SET	FA55-32 190	1	(W P S)	
	32 470A	VALVE & PISTON	FA55-32 470	1	(W P S)	
	32 850	JOINT STEERING	0187-32-850D	1	(W P S) THRU MAY '84 PROD	FB33* 800001-835855
			FA55-32-850A	1	FROM JUN '84 PROD	FB33* 835856-

SECTION INDEX -- CHASSIS

STARTING LOCATION	SECT. NO.	SECTION NAME
1 - C 9	2500A	PROPELLER SHAFT
1 - D 9	2600A	REAR AXLE
1 - E 9	2610A	REAR BRAKES (DRUM) (S, GS)
1 - F 9	2610AA	REAR BRAKES (DISC) (GSL, GSL-SE)
1 - G 9	2700A	DIFFERENTIAL (REAR DRUM BRAKES) (S, GS)
1 - I 9	2700AA	DIFFERENTIAL (REAR DISC BRAKES) (GSL, GSL-SE)
1 - K 9	2800A	REAR SUSPENSION
1 - L 9	2810A	REAR STABILIZER
1 - M 9	3200A	STEERING WHEEL
1 - N 9	3210A	STEERING COLUMN & GEAR
1 - C10	3230A	STEERING LINKAGE
1 - D10	3240A	POWER STEERING SYSTEM
1 - E10	3300A	FRONT AXLE & BRAKES
1 - F10	3400A	FRONT SUSPENSION
1 - G10	3410A	CROSSMEMBER & STABILIZER
1 - H10	3700A	TIRE & JACK
1 - K10	3900A	ENGINE & TRANSMISSION MOUNTINGS
1 - L10	4000A	EXHAUST SYSTEM
1 - N10	4140A	CLUTCH RELEASE & MASTER CYLINDERS (M T)
1 - C11	4160A	ACCELERATOR CONTROLS
1 - D11	4200A	FUEL TANK
1 - E11	4300A	CLUTCH & BRAKE PEDAL
1 - F11	4340A	BRAKE MASTER CYLINDER & POWER BRAKE (REAR DRUM BRAKES) (S, GS)
1 - G11	4340AA	BRAKE MASTER CYLINDER & POWER BRAKE (REAR DISK BRAKES) (GSL, GSL SE)
1 - H11	4360A	BRAKE PIPING (REAR DRUM BRAKE) (S, GS)
1 - I11	4360AA	BRAKE PIPING (REAR DISC BRAKE) (GSL, GSL-SE)
1 - J11	4400A	PARKING BRAKE SYSTEM
1 - L11	4500A	FUEL PIPINGS
1 - N11	4600A	CHANGE CONTROLS (A T)

STARTING LOCATION	SECT. NO.	SECTION NAME

STARTING LOCATION	SECT. NO.	SECTION NAME

3230A-1 STEERING LINKAGE

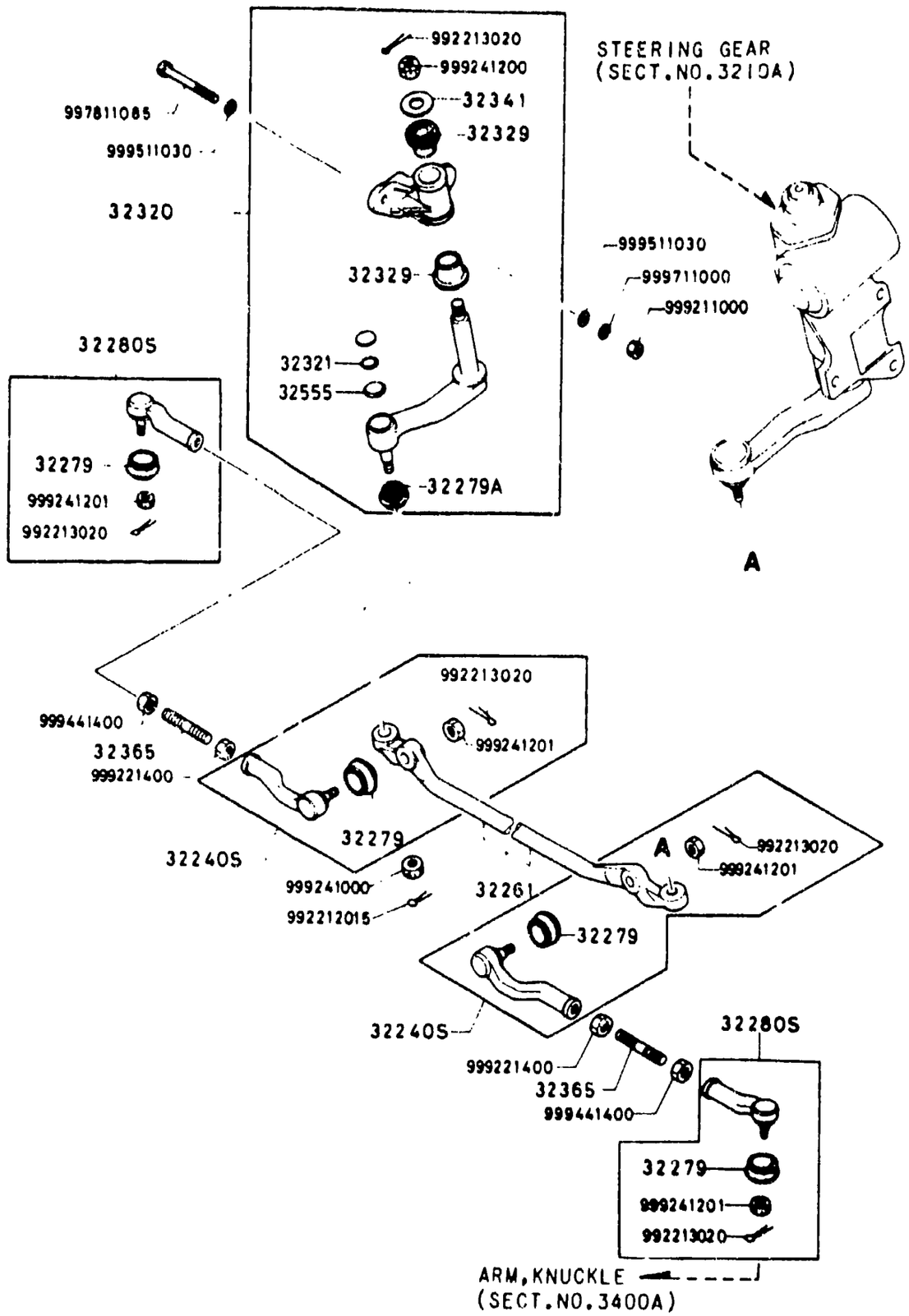

ITEM NO	D-CODE	DESCRIPTION	PART NO.	QTY	MODEL/DESCRIPTION	REMARKS
	32 240S	TIE ROD END, INNER	8531-99-322A	1		
	32 261	LINK, CENTER	8871-32-261	1		
	32 279	SEAL, DUST	8021-32-279	4		
	32 279A	SEAL, DUST	0866-32-279	1		
	32 280S	TIE ROD END, OUTER	8021-99-324	2		
	32 320	ARM, IDLER	8871-32-320A	1		
	32 321	SHIM, IDLER	1011-32-324	1	(T=0.05)	
			0866-32-323	1	(T=0.1)	
			0866-32-325	1	(T=0.3)	
	32 329	BUSHING	1524-32-329B	2		
	32 341	WASHER	0866-32-341	1		
	32 365	ROD, TIE	2113-32-365	2		
	32 555	SPRING	0305-34-555	3		

3240A-1 POWER STEERING SYSTEM

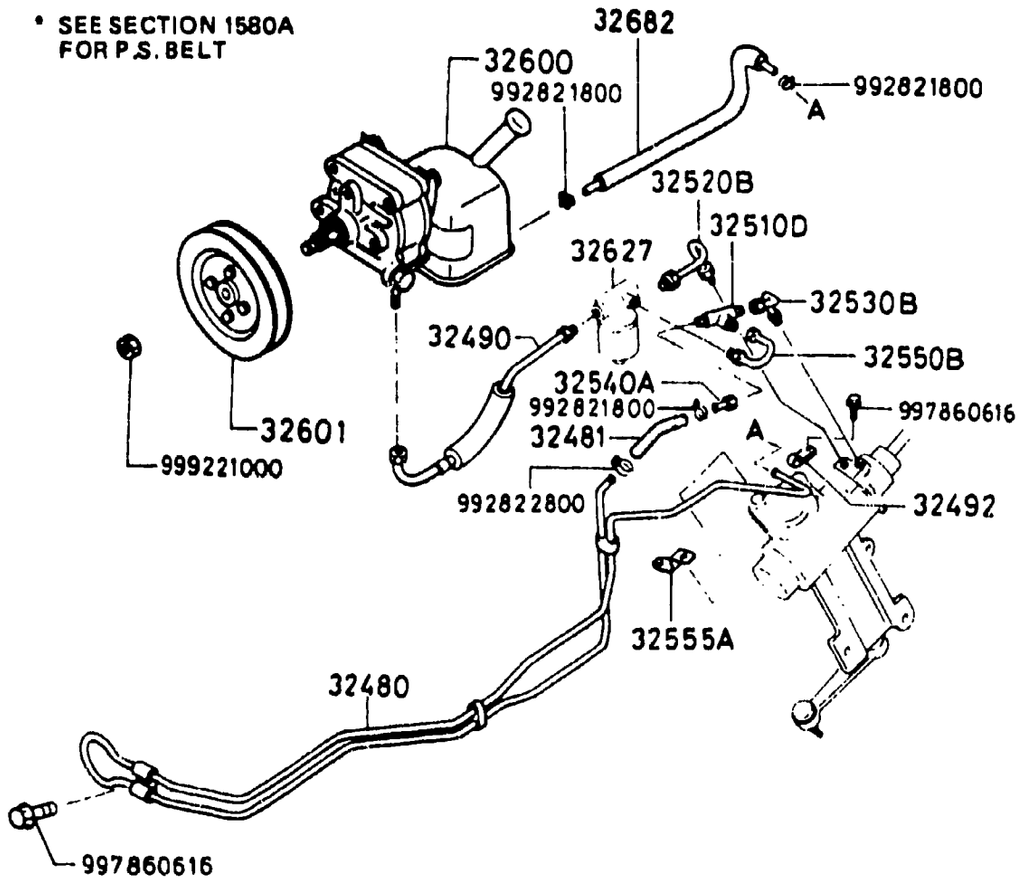

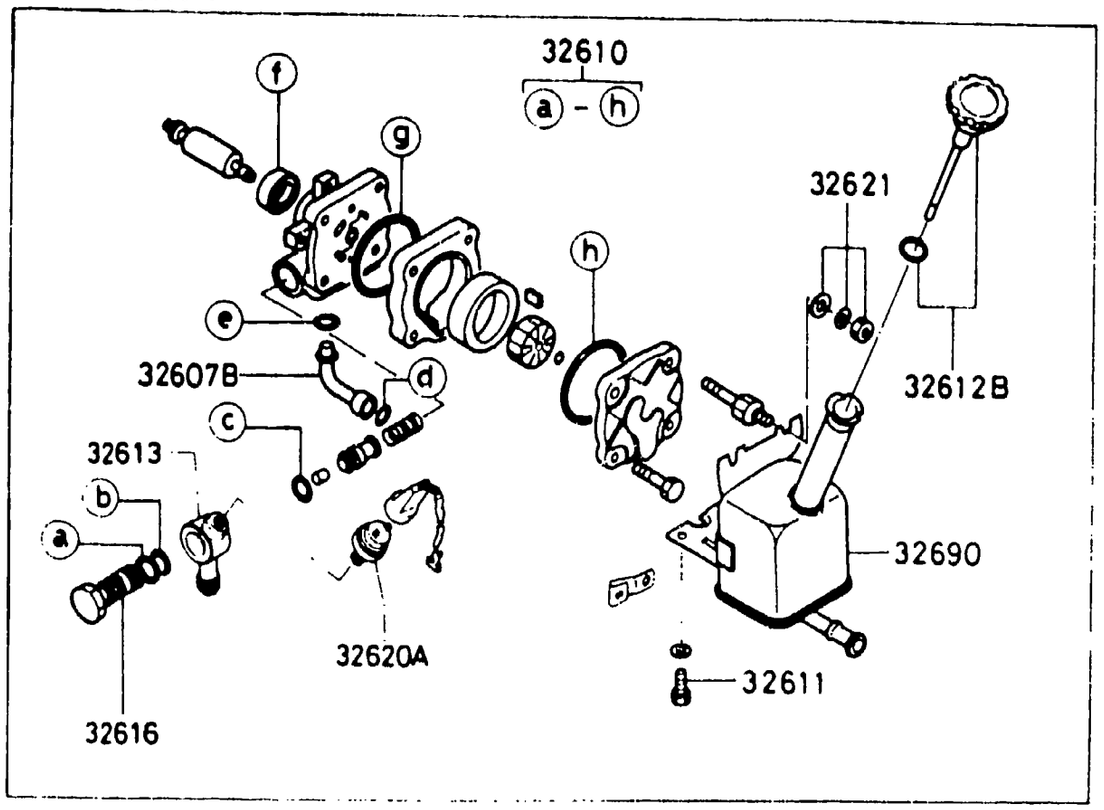

ITEM NO.	D-CODE	DESCRIPTION	PART NO.	QTY	MODEL/DESCRIPTION	REMARKS
	32 480	PIPE, RETURN	FA55-32-570D	1		
	32 481	HOSE, RETURN	FA55-32-481C	1		
	32 490	HOSE, PRESSURE	FA55-32-490C	1		
	32 492	CLIP	FA55-32-492	1		
	32 510D	JOINT	FA55-32-510	1		
	32 520B	PIPE, PRESSURE	FA55-32-520	1		
	32 530B	PIPE, RETURN (NO. 1)	FA55-32-530	1		
	32 540A	PIPE, RETURN (NO. 2)	FA55-32-540	1		
	32 550B	PIPE, RETURN (NO. 3)	FA55-32-550	1		
	32 555A	BRACKET	FA55-32-555	1		
	32 600	PUMP, VANE	FA56-32-610	1		
	32 601	PULLEY	H119-32-620	1		
	32 607B	ELBOW, RETURN	HB40-32-607	1		
	32 610	SEALING KIT	HB40-32-610	1		
	32 611	BOLT	HB40-32-611	1		
	32 612B	DIPSTICK	HB40-32-612	1		
	32 613	NIPPLE	FA56-32-613	1		
	32 616	BOLT	FA56-32-616	1		
	32 620A	SWITCH, PRESSURE	FA56-32-620C	1		
	32 621	NUT	HB40-32-621	1		
	32 627	VALVE, CONTROL	FA55-32-500	1		
	32 682	HOSE	FA55-32-460B	1		
	32 690	TANK	FA56-32-690	1		

3300A-1 FRONT AXLE & BRAKES

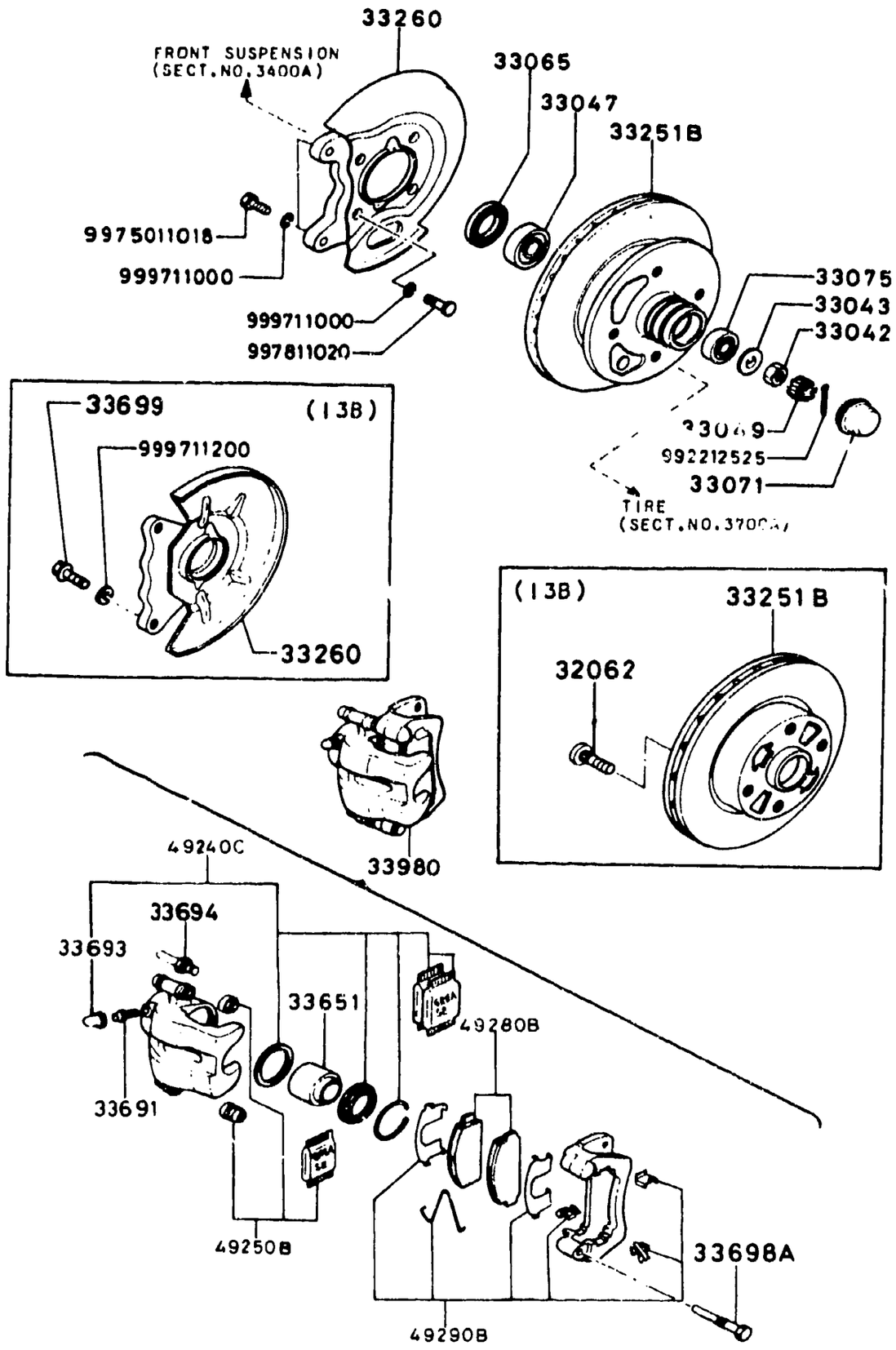

ITEM NO.	D-CODE	DESCRIPTION	PART NO.	QTY	MODEL/DESCRIPTION	REMARKS
	32 062	BOLT, WHEEL	8595-26-113	8	13B (GSL-SE)	
	33 042	NUT	0662-33-042	2		
	33 043	WASHER, TAB	1011-33-043	2		
	33 047	BEARING, FRONT WHEEL	8545-33-047	2		
	33 049	COVER, SET	0662-33-049	2		
	33 065	SEAL, OIL	1312-33-065	2		
	33 071	CAP, HUB	H001-33-071	2		
	33 075	BEARING, FRONT WHEEL	1391-33-075	2		
	33 251B	PLATE, HUB/DISC	FA54-33-251B	2	12A (S, GS, GSL)	
			FA66-33-251B	2	13B (GSL-SE)	
	33 260	ADAPTER (R), MOUNTING	FA54-33-260A	1	12A (S, GS, GSL)	
			FA66-33-260A	1	13B (GSL-SE)	
		ADAPTER (L), MOUNTING	FA54-33-270A	1	12A (S, GS, GSL)	
			FA66-33-270A	1	13B (GSL-SE)	
	33 651	PISTON	8341-33-651A	1		
	33 691	SCREW, BLEEDER	0233-33-691	2		
	33 693	CAP, RUBBER	0255-33-693	4		
	33 694	PIN, GUDE	8341-33-694	2		
	33 698A	PIN	8341-33-699	2	12A (S, GS, GSL)	
			FA66-33-699	2	13B (GSL-SE)	
	33 699	BOLT, CALIPER BRAKE	0305-33-699	4	13B (GSL-SE)	
	33 980	CALIPER (R), FRT. BRAKE	FA57-33-980	1	12A (S, GS, GSL)	
			FA66-33-980	1	13B (GSL-SE)	
		CALIPER (L), FRT. BRAKE	FA57-33-990	1	12A (S, GS, GSL)	
			FA66-33-990	1	13B (GSL-SE)	
	49 240C	SEAL KIT	8341-49-240	1		
	49 250B	BOOT KIT	8341-49-250	1	12A (S, GS, GSL)	
			FA66-49-250	1	13B (GSL-SE)	
	49 280B	PAD SET, FRONT CALIPER	8871-49-280A	1	12A (S, GS, GSL)	
			FA66-49-280	1	13B (GSL-SE)	
	49 290B	ATTACHMENT-PAD	8341-49-290A	1	12A (S, GS, GSL)	
			FA66-49-290A	1	13B (GSL-SE)	

3400A-1 FRONT SUSPENSION

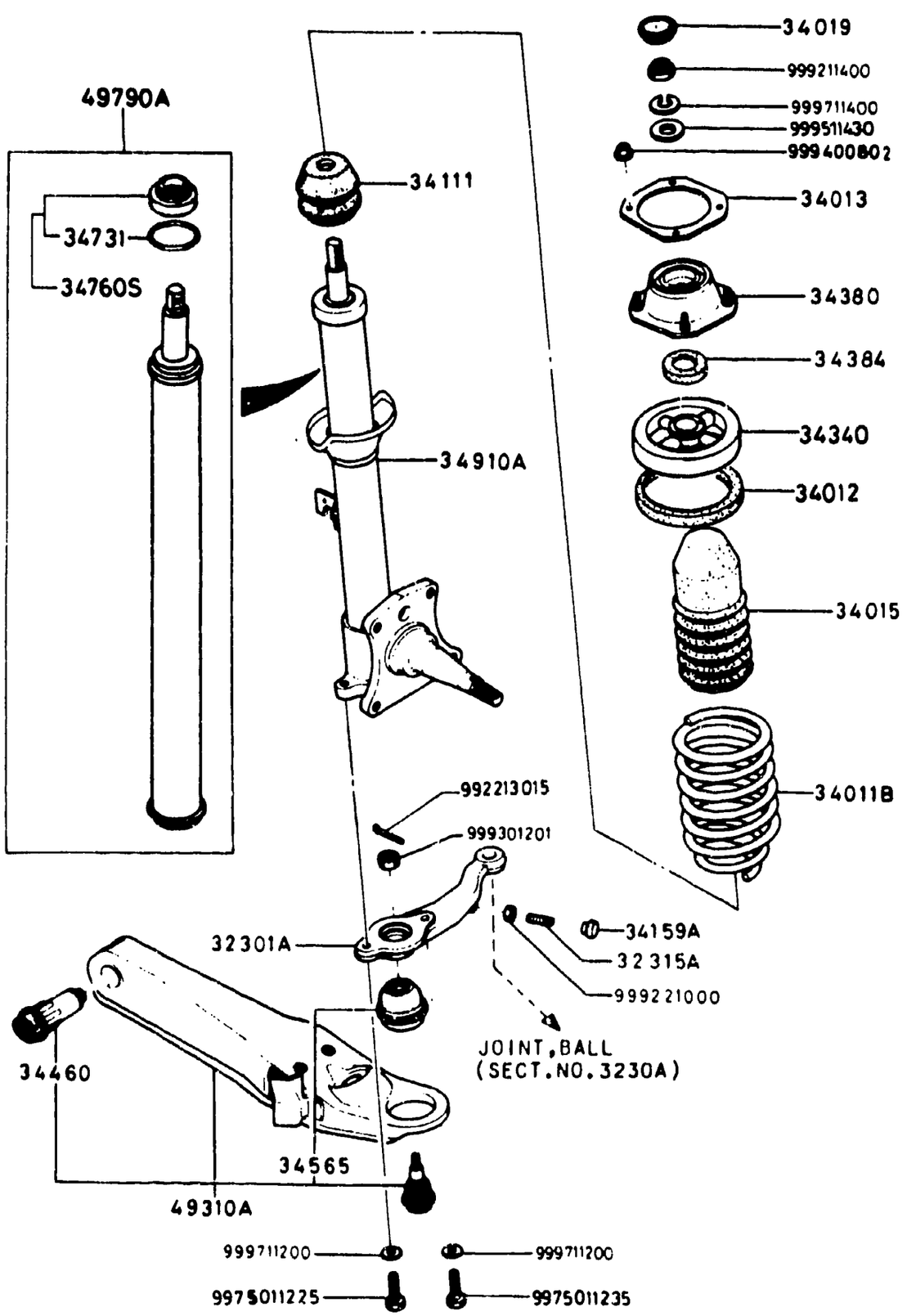

ITEM NO.	D-CODE	DESCRIPTION	PART NO.	QTY	MODEL/DESCRIPTION	REMARKS
	32 301A	ARM (R), KNUCKLE	8871-32-301C	1		
		ARM (L), KNUCKLE	8871-32-311C	1		
	32 315A	BOLT, STOPPER	0603-32-315	2		
	34 011B	SPRING (R), COIL	F001-34-011A	1	12A (S, GS, GSL)	
			FA66-34-011	1	13B (GSL-SE)	
		SPRING (L), COIL	FA01-34-011A	1	12A (S, GS, GSL)	
			FA67-34-011	1	13B (GSL-SE)	
	34 012	SHEET, RUBBER	FA01-34-012	2		
	34 013	PLATE, ADJUST	1011-34-013	2		
	34 015	COVER, DUST	FA01-34-015	2		
	34 019	CAP, DAMPER	1011-34-019	2		
	34 111	BUMPER, BOUND	8871-34-111A	2		
	34 159A	STOPPER, STEERING	1243-34-159	2		
	34 340	SHEET, SPRING-UPPER	FA01-34-340A	2		
	34 380	BLOCK, MOUNTING	FA01-34-390A	2		
	34 384	SPACER	FA01-34-384	2		
	34 460	BUSHING, ARM	8173-34-460B	2		
	34 565	SEAL, DUST	8531-34-565	2		
	34 731	O-RING	8171-34-731	1		
	34 760S	SEAL SET, DAMPER	8171-34-970	2		
	34 910A	DAMPER	FA55-34-910A	2	12A (S, GS, GSL)	
			FA66-34-910B	2	13B (GSL-SE)	
	49 310A	ARM & BALL JOINT (R)	FA54-49-310	1		
		ARM & BALL JOINT (L)	FA54-49-320	1		
	49 790A	CARTRIDGE, DAMPER	FA01-49-790	2	12A (S, GS, GSL)	
			FA66-49-790	2	13B (GSL-SE)	

3410A-1 CROSSMEMBER & STABILIZER

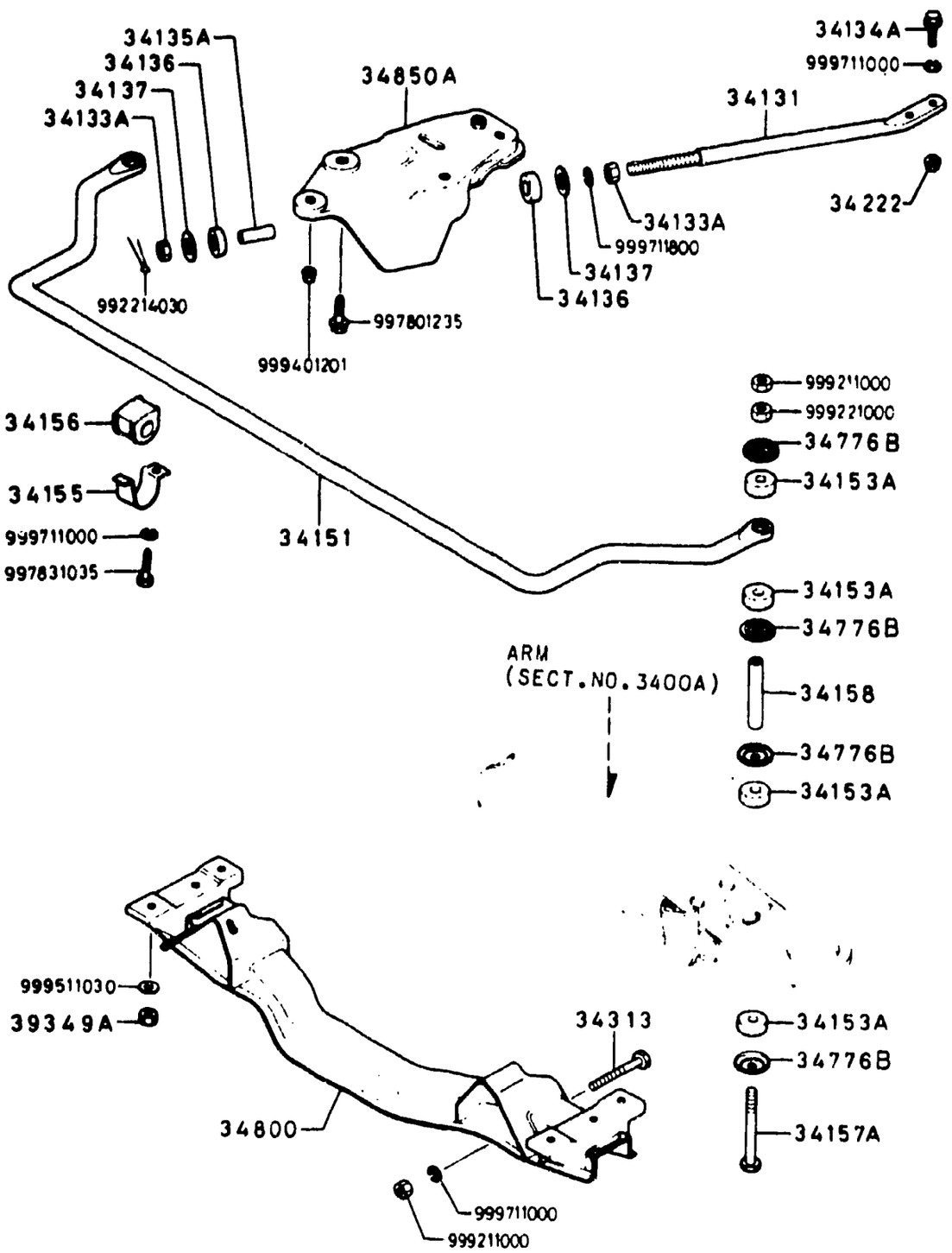

ITEM NO.	D-CODE	DESCRIPTION	PART NO.	QTY	MODEL/DESCRIPTION	REMARKS
	34 131	ROD, TENSION	8871-34-131A	2		
	34 133A	NUT, TENSION ROD	8871-34-133A	4		
	34 134A	BOLT, TENSION ROD	8871-34-134A	4		
	34 135A	SPACER	8871-34-135A	2		
	34 136	CUSHION	8871-34-136B	4		
	34 137	RETAINER	8871-34-137A	4		
	34 151	STABILIZER	8871-34-151	1		
	34 153A	BUSHING, STABILIZER	1243-34-153	8		
	34 155	PLATE, STABILIZER	FA01-34-155	2		
	34 156	BUSHING	8871-34-156A	2		
	34 157A	BOLT, STABILIZER	0603-34-157A	2		
	34 158	SPACER, STABILIZER	0603-34-158	2		
	34 222	NUT	8871-34-222	4		
	34 313	BOLT, ARM	B001-28-114	2		
	34 776B	RETAINER	0223-28-776	8		
	34 800	MEMBER, CROSS	FA55-34-800	1	12A A/T (S, GS, GSL)	
			8871-34-800C	1	12A M/T (S, GS, GSL)	
			FA66-34-800	1	13B (GSL-SE)	
	34 850A	BRACKET (R), TENSION ROD	8871-34-850D	1		
		BRACKET (L), TENSION ROD	8871-34-860D	1		
	39 349A	NUT, CROSS MEMBER	1391-39-349	4		

3700A-1 TIRE & JACK

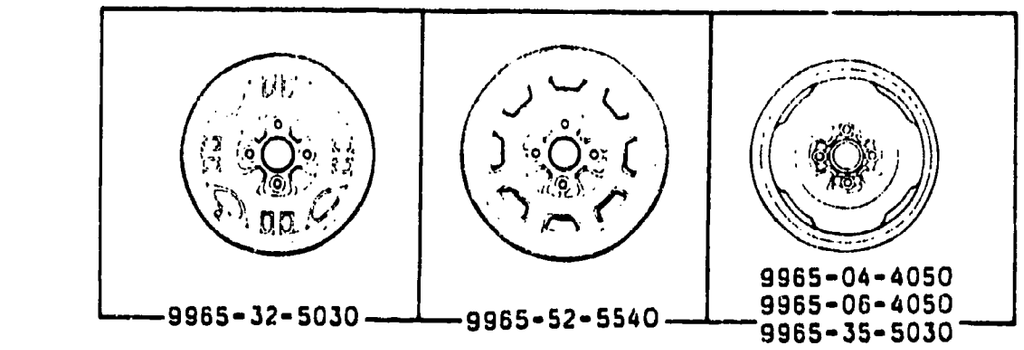

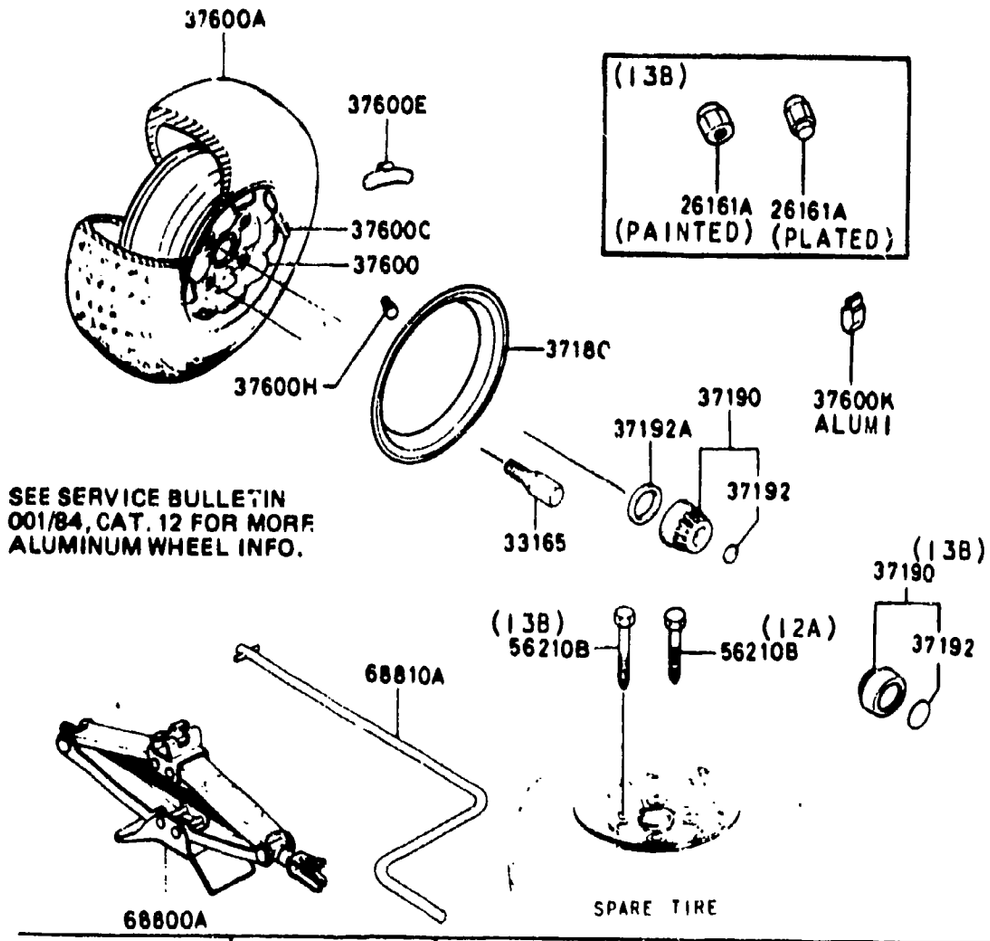

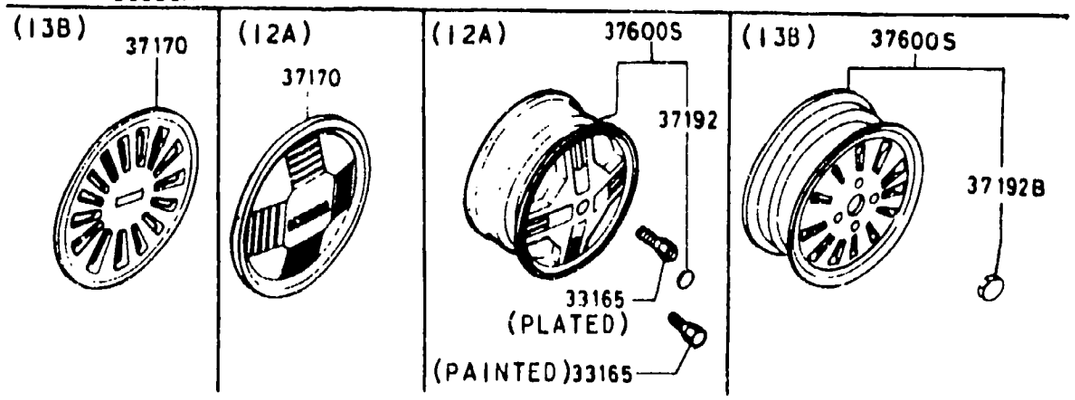

ITEM NO.	D-CODE	DESCRIPTION	PART NO.	QTY	MODEL/DESCRIPTION	REMARKS
	26 161A	NUT, HUB	B002-37-160	16	13B (GSL-SE) (PLATED)	
			0603-26-161	16	13B (GSL-SE) (PAINTED)	
		SEE ACCESSORY BULLETIN XE-5 FOR WHEEL LOCK INFORMATION				
	33 165	BOLT, WHEEL SET	1029-33-165	16	12A (S, GS, GSL) (PLATED)	
			8531-33-165	16	12A (S, GS, GSL) (PAINTED)	
		<A>	8532-33-165	16		
			8595-26-113	8	13B (GSL-SE)	
	37 170	CAP, WHEEL	G002-37-190	4	12A (S,GS,GSL)	
			H116-37-170	4	13B (GSL-SE) THRU JULY '84	FB33* .. 800001-856208
	37 180	RING, WHEEL	1011-37-182D	4	12A (S, GS, GSL)	
			H002-37-182A	4	13B (GSL-SE)	
	37 190	CAP, CENTER	8871-37-190	4	12A (S, GS, GSL)	
			B001-37-190	4	13B (GSL-SE)	
	37 192	EMBLEM	FA01-37-191	4	12A (S, GS, GSL) (FOR ALUMI. WHEEL)	
			8871-37-192	4	12A (S, GS, GSL) (FOR STEEL WHEEL)	
			B001-37-192	4	13B (GSL-SE) (FOR STEEL WHEEL)	
	37 192A	RUBBER, SET	8531-37-193C	4	12A (S, GS, GSL) (FOR CENTER CAP)	
	37 192B	EMBLEM	H115-37-192	4	13B (GSL-SE) (FOR ALUMI. WHEEL)	
	37 600	WHEEL	9965-04-4050		(TEMPORARY) (S, GS, GSL)	
			9965-06-4050	1	13B (GSL-SE) (4-TX15) (TEMPORARY)	
			9965-38-5030	4	12A (S, GS, GSL) (5JX13WDC) (DESIGN STEEL WHL)	
		SUNBEAM SILVER M.	K3			
				4	12A (S, GS, GSL) (5JX13WDC) (NORMAL STEEL WHL)	
		SUNBEAM SILVER M.	K3			
			9965-52-5540	1	13B (GSL-SE) (5.5-JJX14WDC) (STEEL WHL) THRU JULY '84 PROD.	FB33* .. 800001-856208
		TIRE				
		SEE ACCESSORY BULLETIN XE-1 FOR MORE TIRE INFO.				
	37 600C	VALVE, AIR	9963-60-4130			
	37 600E	WEIGHT, BALANCING	9965-53-0010		(10G)	

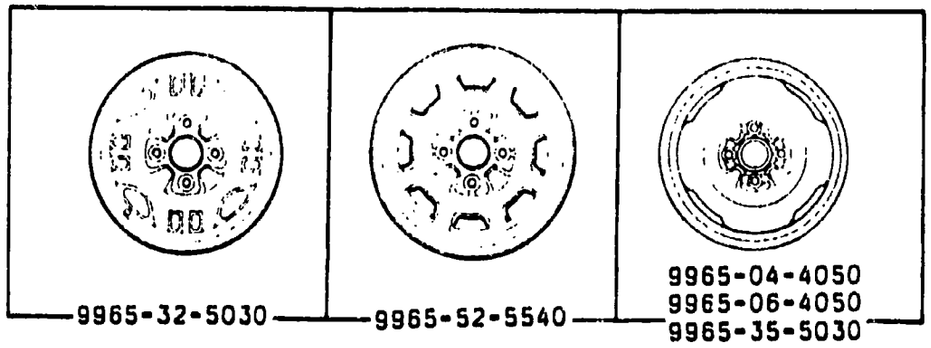

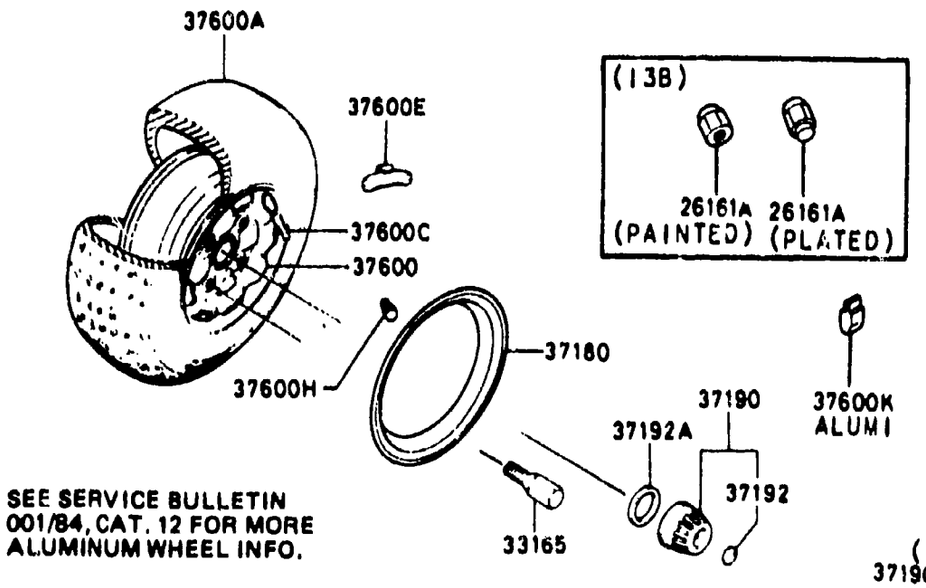

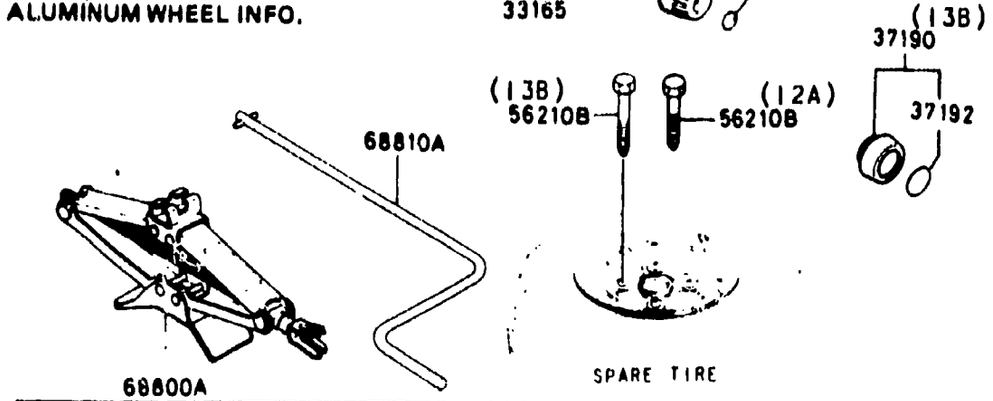

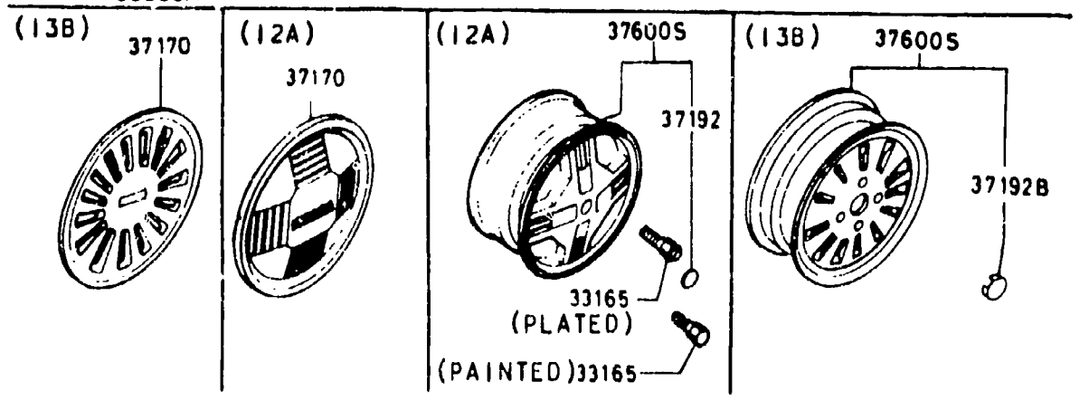

ITEM NO.	D-CODE	DESCRIPTION	PART NO.	QTY	MODEL/DESCRIPTION	REMARKS
	37 600E (CONT'D)		9965-53-0015		(15G)	
			9965-53-0020		(20G)	
			9965-53-0025		(25G)	
			9965-53-0030		(30G)	
			9965-53-0035		(35G)	
			9965-53-0040		(40G)	
			9965-53-0045		(45G)	
			9965-53-0050		(50G)	
			9965-53-0060		(60G)	
	37 600H	EXTENSION, AIR VALVE	9963-72-0221	1	13B (GSL-SE)	
	37 600K	WEIGHT, BALANCE-ALUMINUM (ADHESIVE TYPE)	9965-59-0010		(10G) S, GS, GSL	
			9965-59-0015		(15G) S, GS, GSL	
		WEIGHT, BALANCE-ALUMINUM (ADHESIVE TYPE)	9965-59-0020		(20G) S, GS, GSL	
			9965-59-0025		(25G) S, GS, GSL	
			9965-59-0030		(30G) S, GS, GSL	
			9965-59-0035		(35G) S, GS, GSL	
			9965-59-0040		(40G) S, GS, GSL	
			9965-59-0045		(45G) S, GS, GSL	
			9965-59-0050		(50G) S, GS, GSL	
			9965-59-0060		(60G) S, GS, GSL	
			9965-61-0010		(10G) GSL-SE	
			9965-61-0015		(15G) GSL-SE	
			9965-61-0020		(20G) GSL-SE	
			9965-61-0025		(25G) GSL-SE	
			9965-61-0030		(30G) GSL-SE	
			9965-61-0035		(35G) GSL-SE	
			9965-61-0040		(40G) GSL-SE	
			9965-61-0045		(45G) GSL-SE	
			9965-61-00[illegible]		(50G) GSL-SE	
			9965-61-0060		(60G) GSL-SE	
	37 600S	WHEEL SET, ALUMINUM	FA01-89-376		12A (S, GS, GSL) (5.5JJX13WDC)	
			M[illegible] 5-89-376	5	13B (GSL-SE) (5.5JJX14)	
		REFER TO SERVICE BULLETIN 002/85 CAT. 12 FOR TIRE CHANGER INFORMATION				
		REFER TO PARTS BULL. NO. T-2-1 FOR MORE INFO.				
	56 210B	CLAMP, SPARE TIRE	FA54-56-961	1	12A (S, GS, GSL)	
			F002-56-961	1	13B (GSL-SE)	

3700A-3 TIRE & JACK

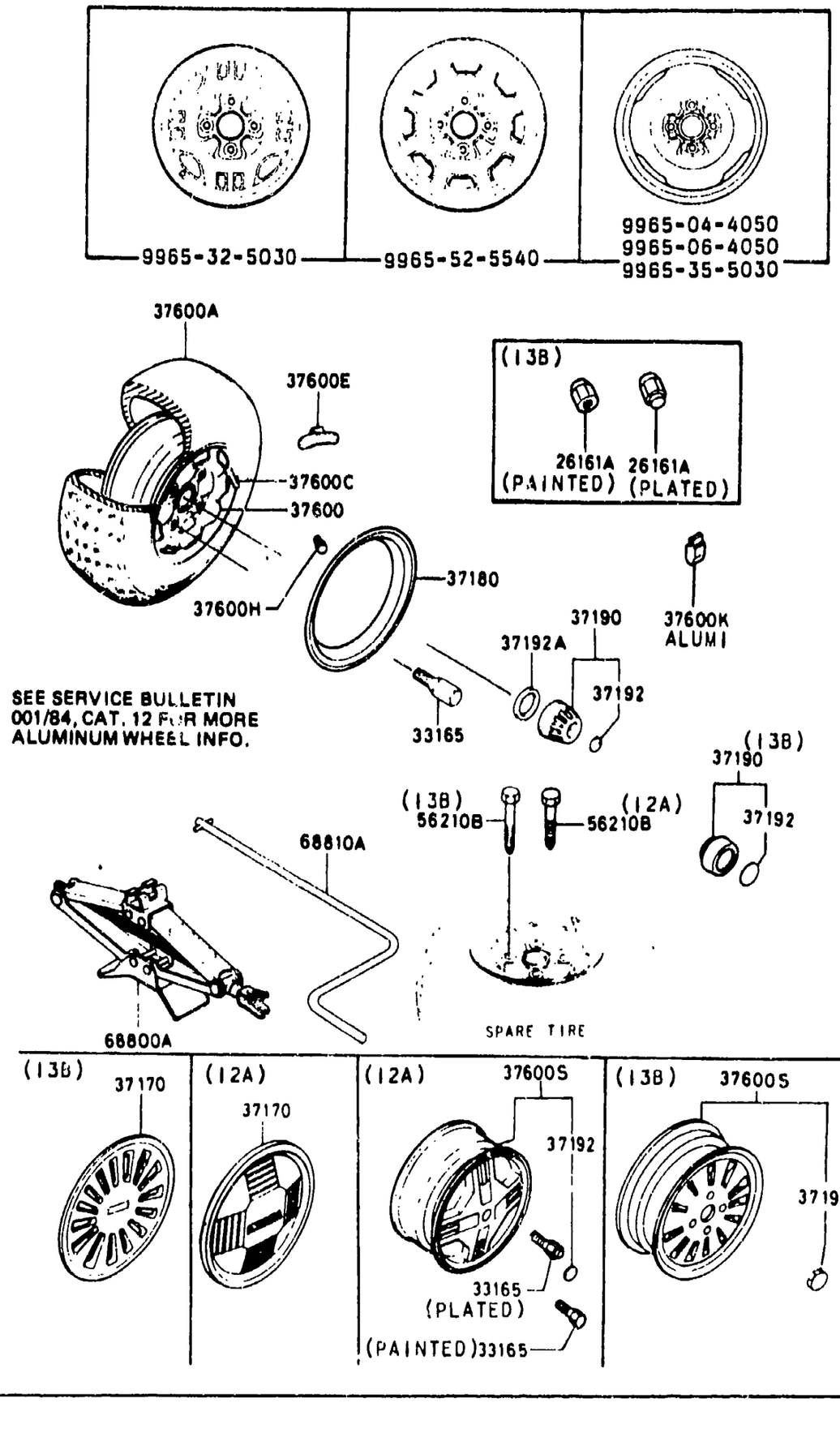

ITEM NO.	D-CODE	DESCRIPTION	PART NO.	QTY	MODEL/DESCRIPTION	REMARKS
	68 800A	JACK	8871-37-790D	1		
	68 810A	HANDLE, JACK	0305-68-810A	1		

3900A-1 ENGINE & TRANSMISSION MOUNTINGS

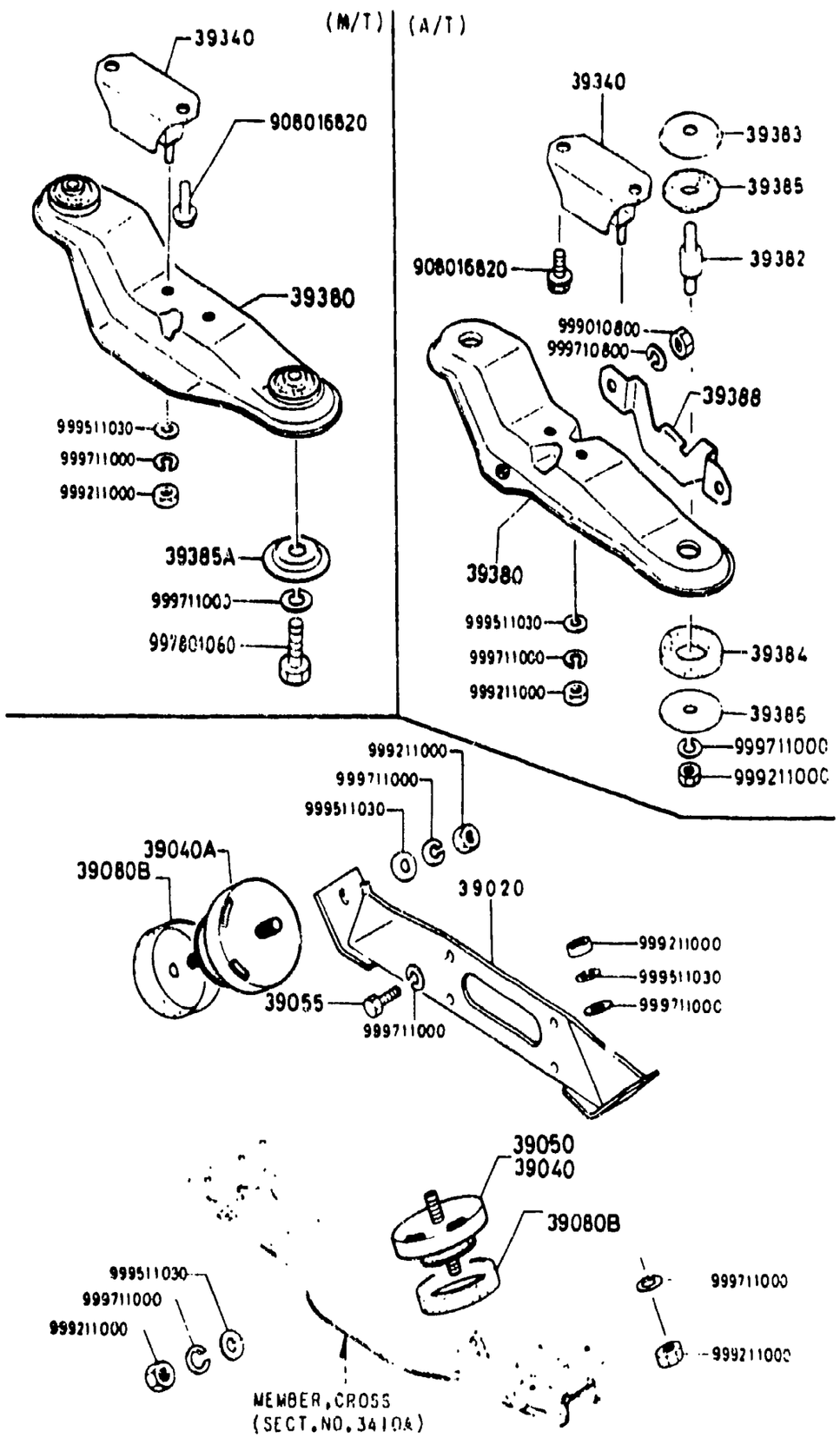

ITEM NO.	D-CODE	DESCRIPTION	PART NO.	QTY	MODEL/DESCRIPTION	REMARKS
	39 020	BRACKET, ENGINE MTG.	8871-39-021B	1		
	39 040	RUBBER (L), ENGINE MTG.	FA55-39-040	1	13B (GSL-SE)	
					12A A/T (S, GS, GSL)	
	39 040A	RUBBER (R), ENGINE MTG.	1668-39-040D	1		
	39 045	CASING (L), STOPPER	FA55-39-045	1	13B (GSL-SE)	
					12A A/T (S, GS, GSL)	
	39 050	RUBBER (L), ENGINE MTG.	8545-39-040	1	12A M/T (S, GS, GSL)	
	39 055	BOLT	8788-39-055	4		
	39 080B	CASING, STOPPER	1668-39-045B	2	12A M/T	
				1	13B, 12A A/T (R)	
	39 340	RUBBER, T/MISSION MTG.	FA55-39-340B	1	A/T	
			1011-39-340A	1	M/T	
	39 380	MEMBER, T/MISSION MTG.	FA55-39-380C	1	A/T	
			FA66-39-350A	1	M/T	
	39 382	STUD	FA55-39-372	2	A/T	
	39 383	WASHER	0884-39-383A	2	A/T	
	39 384	INSULATOR, LOWER	8599-39-384A	2	A/T	
	39 385	INSULATOR, UPPER	F001-39-375	2	A/T	
	39 385A	WASHER	FA66-39-385	2	M/T	
	39 386	WASHER	0884-39-386	2	A/T	
	39 388	STOPPER, T/MISSION MTG.	FA55-39-388A	1	A/T	

4000A-1 EXHAUST SYSTEM

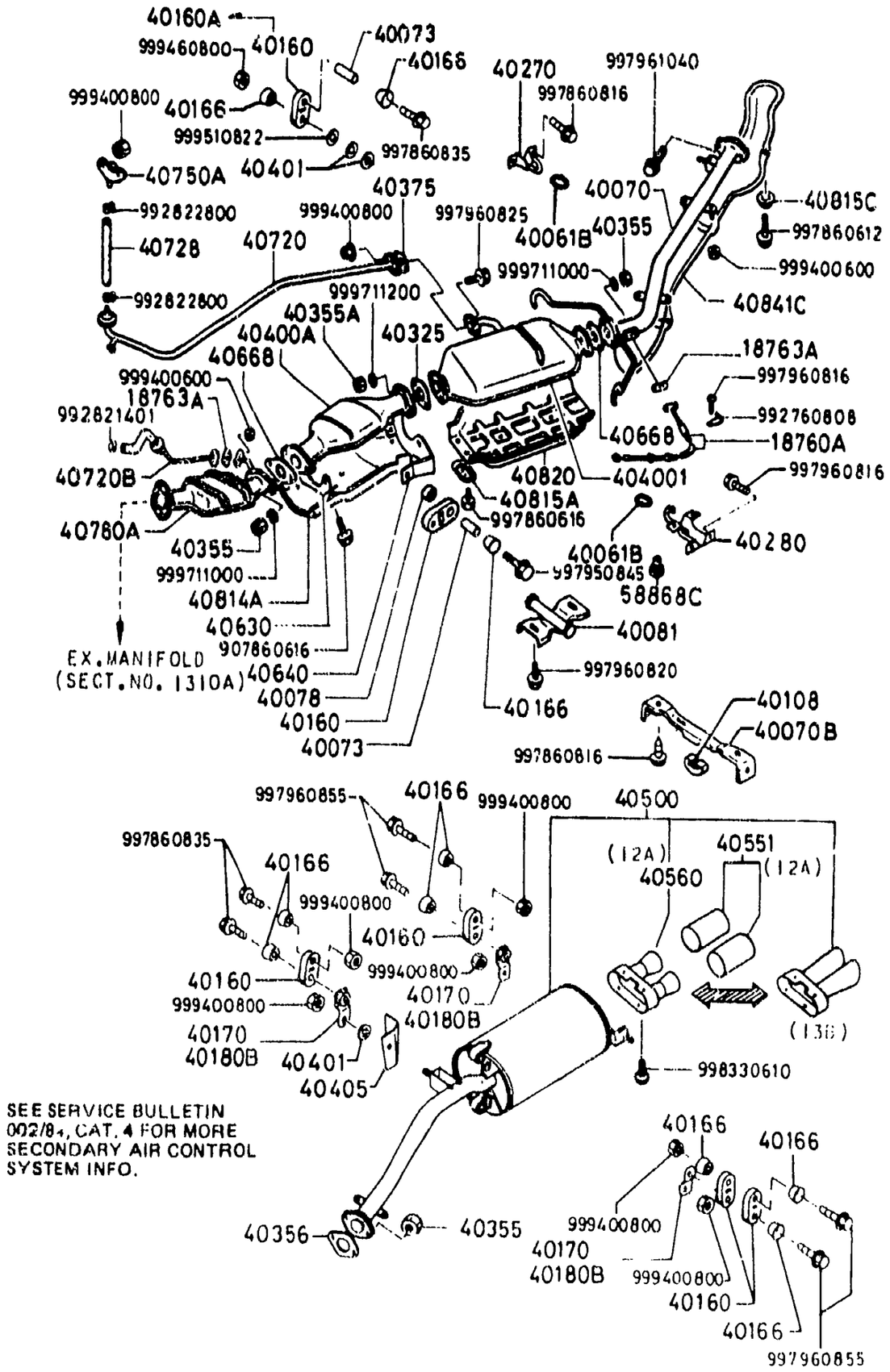

SEE SERVICE BULLETIN 002/84, CAT. 4 FOR MORE SECONDARY AIR CONTROL SYSTEM INFO.

ITEM NO.	D-CODE	DESCRIPTION	PART NO.	QTY	MODEL/DESCRIPTION	REMARKS
	18 760A	SENSOR, THERMO	N249-18-761	1	12A (S, GS, GSL)	
	18 763A	GASKET	8131-18-763	2	12A (S, GS, GSL)	
	40 061B	RUBBER, HANGER	N225-40-061	2		
	40 070	PIPE	N249-40-200B	1	12A M/T (S, GS, GSL) THRU FEB. '84 PROD.	FB33* ..800001-825342
			N249-40-200C	1	12A M/T (S, GS, GSL) FROM MAR. '84 PROD.	FB33* ..825343-
			N250-40-200C	1	A/T (S, GS, GSL) THRU FEB. '84 PROD.	FB33* ..800001-825342
			N250-40-200D	1	A/T (S, GS, GSL) FROM MAR. '84 PROD.	FB33* ..825343-
			N304-40-200A	1	13B (GSL-SE) THRU FEB. '84 PROD.	FB33* ..800001-825342
			N304-40-200B	1	13B (GSL-SE) FROM MAR. '84 PROD.	FB33* ..825343-
	40 0708	BRACKET	8871-40-010	1		
	40 073	SPACER	N305-40-073	1		
	40 078	GASKET	N304-40-078A	1		
	40 081	BRACKET	N250-40-080B	1	84 MODEL A/T	
			N304-40-080B	1	84 MODEL M/T	
	40 108	RUBBER, STOP	1114-40-108B	1		
	40 160	HANGER, SILENCER	N304-40-161A	1		
			1114-40-160	4		
	40 160A	HANGER, SILENCER	N305-40-030	1		
	40 166	WASHER	0820-40-166	9		
	40 170	PLATE	8871-40-180	3	12A (S GS, GSL)	
	40 180B	PLATE, HANGER	N304-40-180	1	13B (GSL-SE)	
	40 270	HOOK	1480-40-270	1		
	40 280	HOOK	1480-40-280A	1		
	40 325	GASKET	1480-40-325	1		
	40 355	NUT, FLANGE	8134-40-355	4	THRU AUG. '84 PROD.	FB33* ..800001-861828
			E508-20-524	2	FROM SEP. '84 PROD.	FB33* . 861829-
	40 355A	NUT	8118-40-355	2	13B (GSL-SE)	
	40 356	GASKET	8182-40-356	1		
	40 375	GASKET	1480-40-375	1		
	40 4001	CONVERTER, MONOLITH	N304-40-300	1		
	40 400A	CONVERTER NO 2, PRE	N249-40-400B	1	M T	
			N250-40-400B	1	A-T	
	40 401	INSULATOR	8871-40-401	3		
	40 405	INSULATOR	8871-40-405A	1		
	40 500	SILENCER, MAIN	N229-40-500A	1	12A (S, GS, GSL)	
			N304-40-500C	1	13B (GSL-SE)	
	40 551	COVER	8871-40-551	2	12A (S, GS, GSL)	

4000A-2 EXHAUST SYSTEM

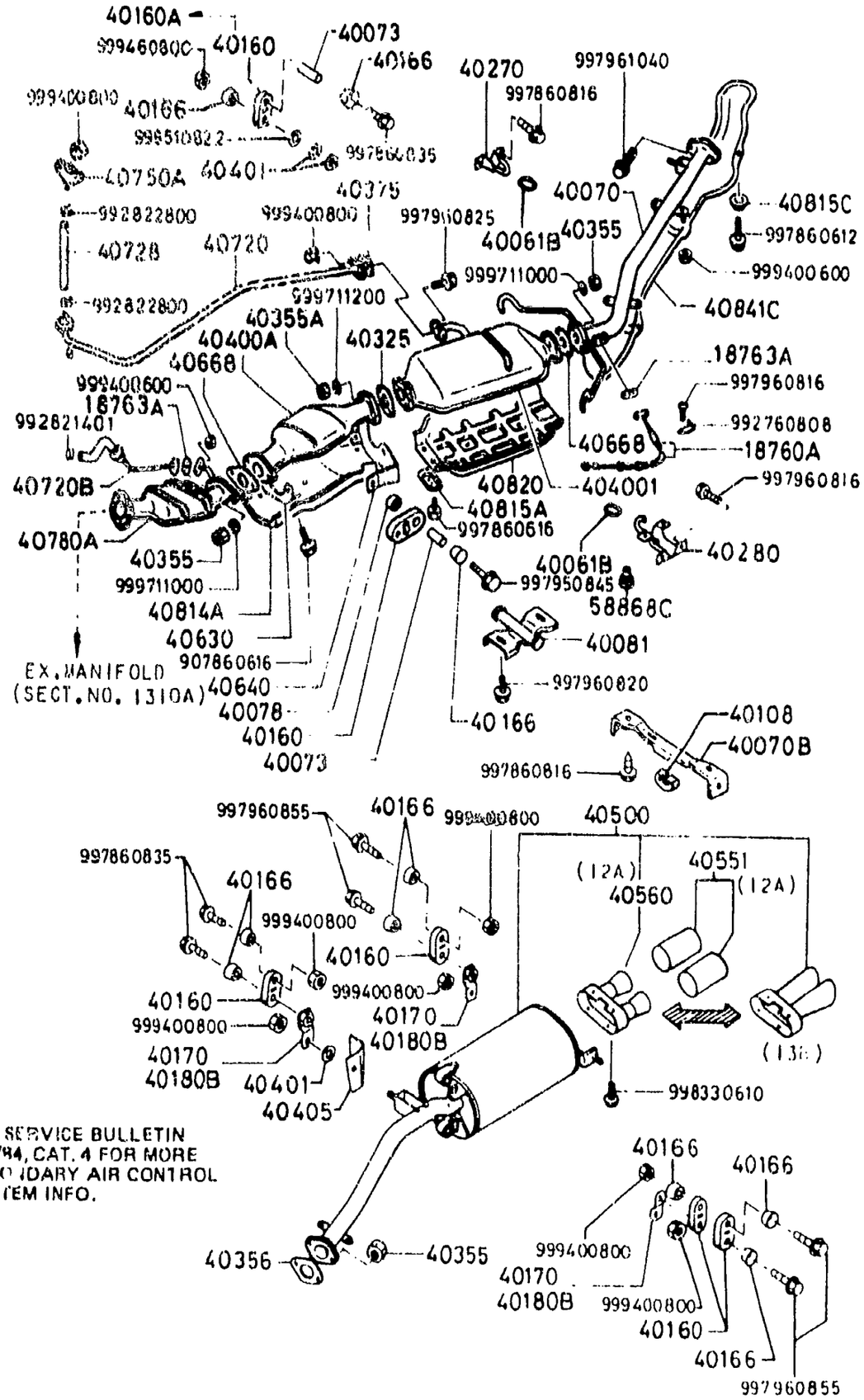

ITEM NO.	D-CODE	DESCRIPTION	PART NO	QTY	MODEL/DESCRIPTION	REMARKS
	40 560	FUNNEL	8871-40-560	1	12A (S, GS, GSL)	
			N304-40-560	1	13B (GSL-SE)	
	40 630	BRACKET	N304-40-630C	1		
	40 640	BRACKET	N249-40-640A	1	M/T	
			N250-40-640B	1	A/T	
	40 668	GASKET	1480-13-621	1		
	40 720	PIPE, AIR	N249-40-740A	1	12A M/T (S, GS, GSL)	
			N250-40-740A	1	A/T (S, GS, GSL)	
			N304-40-740	1	13B (GSL-SE)	
	40 720B	PIPE, AIR	N249-40-720	1	12A A/T (S, GS, GSL) FROM MAR. '84 PROD.	FB33* .824687-
	40 728	HOSE, AIR	1480-40-728	1	12A (S, GS, GSL)	
			N304-40-728B	1	13B (GSL-SE)	
	40 750A	PIPE, PRE AIR	1480-40-750	1	12A (S, GS, GSL)	
	40 780A	CONVERTER NO 1, PRE	N249-40-780B	1	THRU FEB. '84 PROD.	FB33* ..800001-824686
			N249-40-780C	1	12A (S, GS, GSL) FROM MAY '84 PROD.	FB33* ..824687-
			N305-40-780	1	13B (GSL-SE) FROM MAR. '84 PROD.	FB33* . 824687-
	40 814A	PROTECTOR	N250-40-814E	1	A/T	
			N304-40-814E	1	M/T	
	40 815A	WASHER	1480-40-815	2		
	40 815C	WASHER	8545-40-815	4		
	40 820	PROTECTOR NO 2	N304-40-820	1		
	40 841C	PROTECTOR	N250-40-841A	1	A/T	
			N305-40-841A	1	M/T	
	58 868C	PLUG, SERVICE COVER	0559-58-868	1	13B (GSL-SE)	

4140A-1 CLUTCH RELEASE & MASTER CYLINDERS (M/T)

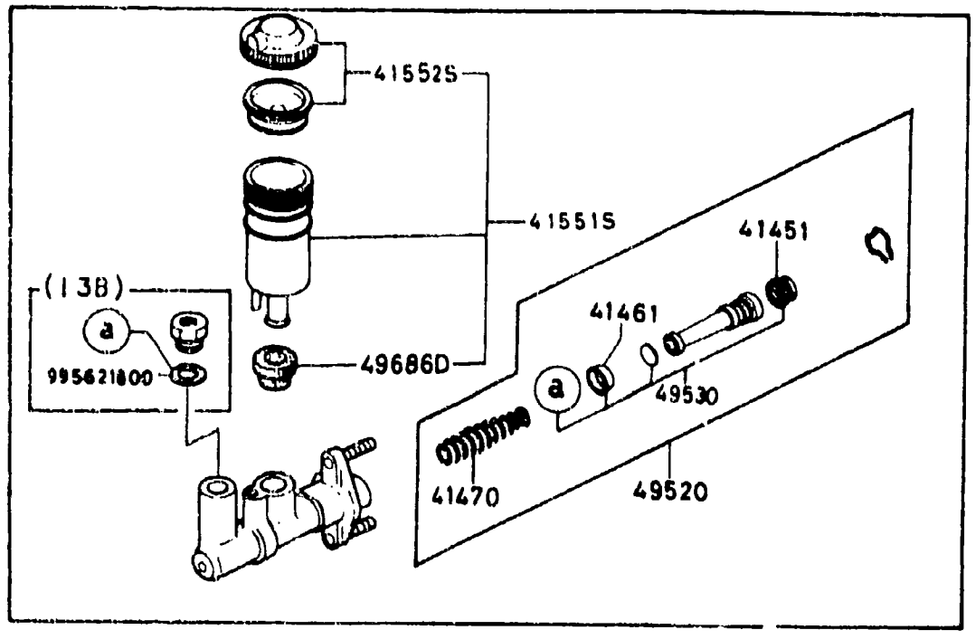

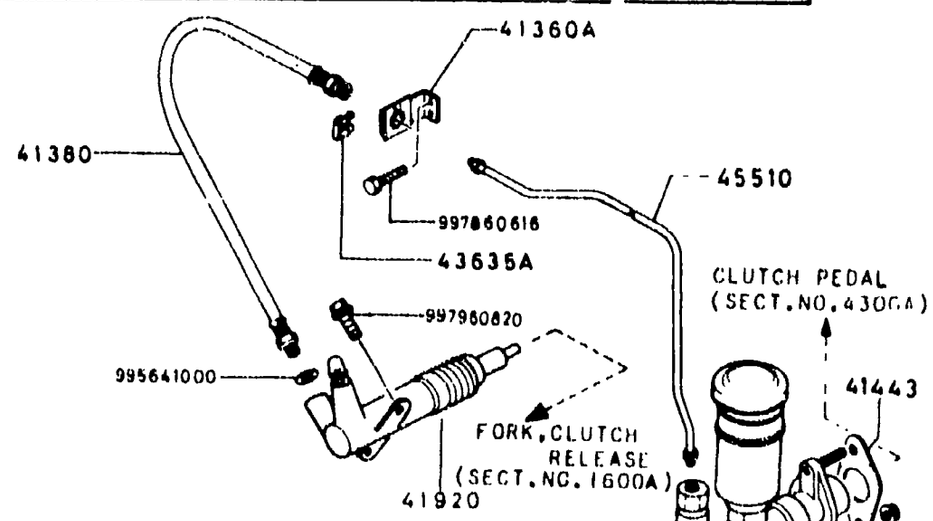

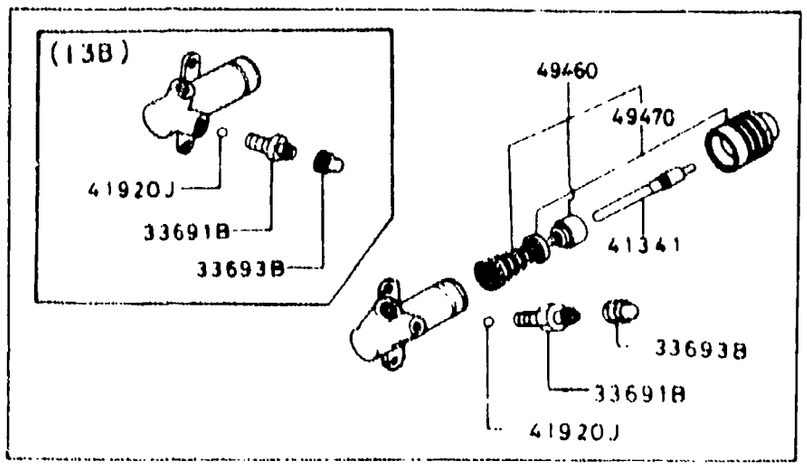

ITEM NO.	D-CODE	DESCRIPTION	PART NO	QTY	MODEL/DESCRIPTION	REMARKS
	33 691B	SCREW, BLEEDER	0259-33-691	1		
	33 693B	CAP, BLEEDER	0259-33-693	1		
	41 341	ROD	H005-41-341	1		
	41 360A	HOLDER	8871-41-370	1		
	41 380	HOSE, FLEXIBLE	G011-41-380	1		
	41 443	GASKET	H001-41-443	1		
	41 451	CUP, SECONDARY	0305-41-451	1		
	41 461	CUP, PRIMARY	0839-41-461	1		
	41 470	SPRING	GA02-41-470	1	FROM APR. '84 PROD	FB33* ..829422-
	41 551S	TANK SET, RESERVE	GA02-49-570B	1		
	41 552S	CAP SET, RESERVE TANK	GA02-49-580B	1	THRU NOV. '84 PROD.	FB33* ..800001-876903
			B093-49-580	1	FROM DEC '84 PROD	FB33* .876904-
	41 920	CYLINDER, CLUTCH RELEASE	FA42-41-920A	1	12A (S, GS, GSL)	
			FA01-41-920	1	13B (GSL-SE)	
	41 920J	BALL, STEEL	9961-11-500	1		
	41 990	CYLINDER, CLUTCH MASTER	FA54-41-400A	1	12A (S, GS, GSL)	
			FA66-41-400A	1	13B (GSL-SE)	
	43 635A	CLIP, FLEXIBLE HOSE	0136-43-635	1		
	45 510	PIPE, CLUTCH	FA66-45-510	1		
	49 460	PARTS KIT, INNER	H005-49-460	1		
	49 470	SEALING KIT	H005-49-470	1		
	49 520	PARTS KIT, INNER	GA02-49-520A	1	12A (S, GS, GSL)	
			S008-41-52Z	1	13B (GSL-SE)	
	49 530	SEALING KIT	GA02-49-530	1	12A (S, GS, GSL)	
			W001-49-530	1	13B (GSL-SE)	
		<A>	W055-41-53Z	1		
	49 686D	BUSHING, ELBOW JOINT	0305-49-686B	1		

SECTION INDEX -- CHASSIS

STARTING LOCATION	SECT. NO.	SECTION NAME
1 - C 9	2500A	PROPELLER SHAFT
1 - D 9	2600A	REAR AXLE
1 - E 9	2610A	REAR BRAKES (DRUM) (S, GS)
1 - F 9	2610AA	REAR BRAKES (DISC) (GSL, GSL-SE)
1 - G 9	2700A	DIFFERENTIAL (REAR DRUM BRAKES) (S, GS)
1 - I 9	2700AA	DIFFERENTIAL (REAR DISC BRAKES) (GSL, GSL-SE)
1 - K 9	2800A	REAR SUSPENSION
1 - L 9	2810A	REAR STABILIZER
1 - M 9	3200A	STEERING WHEEL
1 - N 9	3210A	STEERING COLUMN & GEAR
1 - C10	3230A	STEERING LINKAGE
1 - D10	3240A	POWER STEERING SYSTEM
1 - E10	3300A	FRONT AXLE & BRAKES
1 - F10	3400A	FRONT SUSPENSION
1 - G10	3410A	CROSSMEMBER & STABILIZER
1 - H10	3700A	TIRE & JACK
1 - K10	3900A	ENGINE & TRANSMISSION MOUNTINGS
1 - L10	4000A	EXHAUST SYSTEM
1 - N10	4140A	CLUTCH RELEASE & MASTER CYLINDERS (M/T)
1 - C11	4160A	ACCELERATOR CONTROLS
1 - D11	4200A	FUEL TANK
1 - E11	4300A	CLUTCH & BRAKE PEDALS
1 - F11	4340A	BRAKE MASTER CYLINDER & POWER BRAKE (REAR DRUM BRAKES) (S, GS)
1 - G11	4340AA	BRAKE MASTER CYLINDER & POWER BRAKE (REAR DISK BRAKES) (GSL, GSL-SE)
1 - H11	4360A	BRAKE PIPING (REAR DRUM BRAKE) (S, GS)
1 - I11	4360AA	BRAKE PIPING (REAR DISC BRAKE) (GSL, GSL-SE)
1 - J11	4400A	PARKING BRAKE SYSTEM
1 - L11	4500A	FUEL PIPINGS
1 - N11	4600A	CHANGE CONTROLS (A/T)

STARTING LOCATION	SECT. NO.	SECTION NAME

STARTING LOCATION	SECT. NO.	SECTION NAME

4160A-1 ACCELERATOR CONTROLS

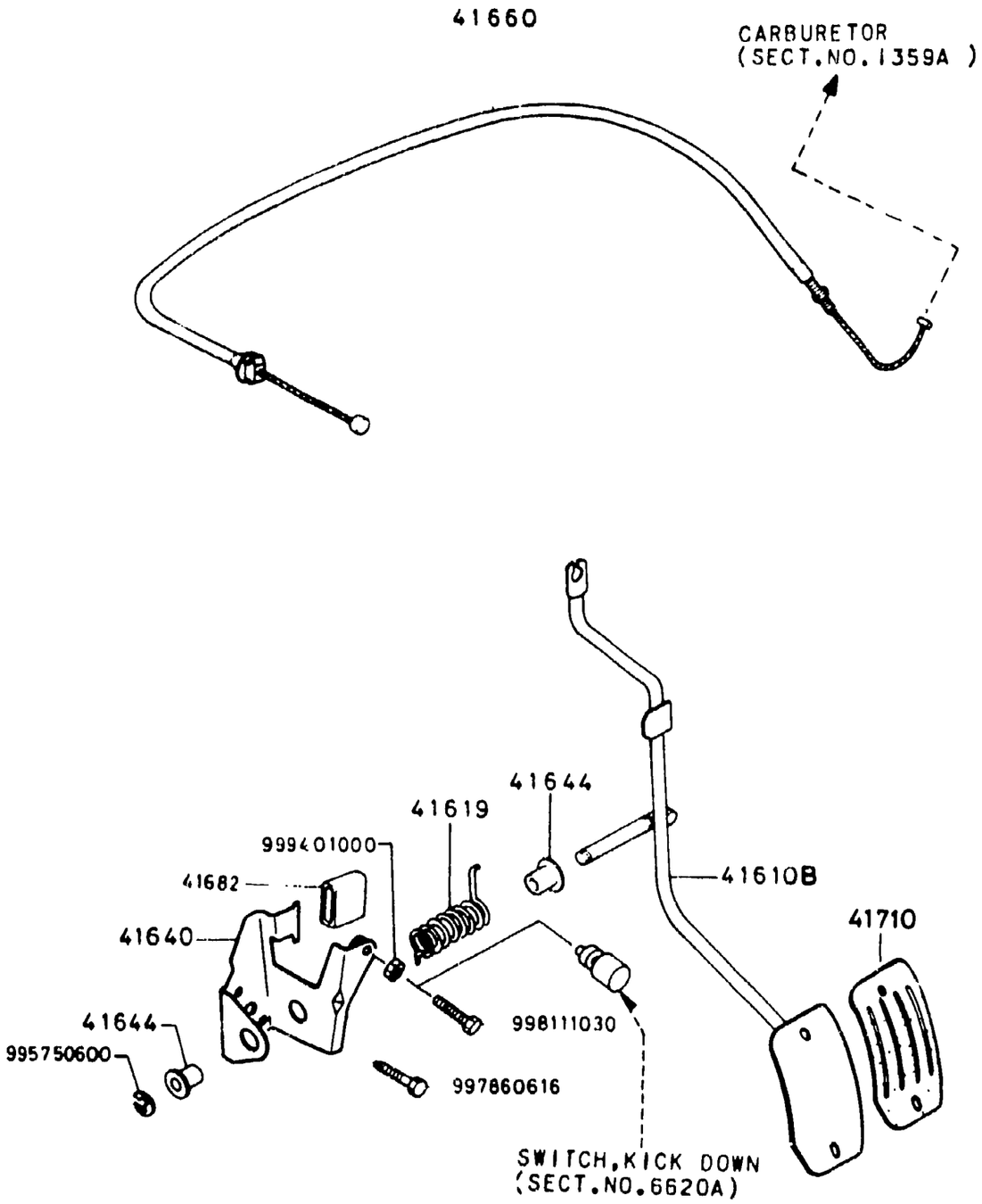

ITEM NO.	D-CODE	DESCRIPTION	PART NO.	QTY	MODEL/DESCRIPTION	REMARKS
	41 610B	PEDAL & ARM	FA55-41-610A	1		
	41 619	SPRING, RETURN	8239-41-619	1		
		<A>	0824-41-619	1		
	41 640	RETAINER, ROD	FA54-41-650A	1		
	41 644	BUSHING	0259-41-644	2		
	41 660	WIRE, ACCELERATOR	FA54-41-660A	1	12A (S, GS, GSL)	
			FA(6-41-660C	1	13B (GSL-SE)	
	41 682	STOPPER	B00'-41-652	1	FROM SEP. '84 PROD.	FB33* ..861829-
	41 710	PEDAL, ACCELERATOR	FA54-41-711A	1		

4200A-1 FUEL TANK

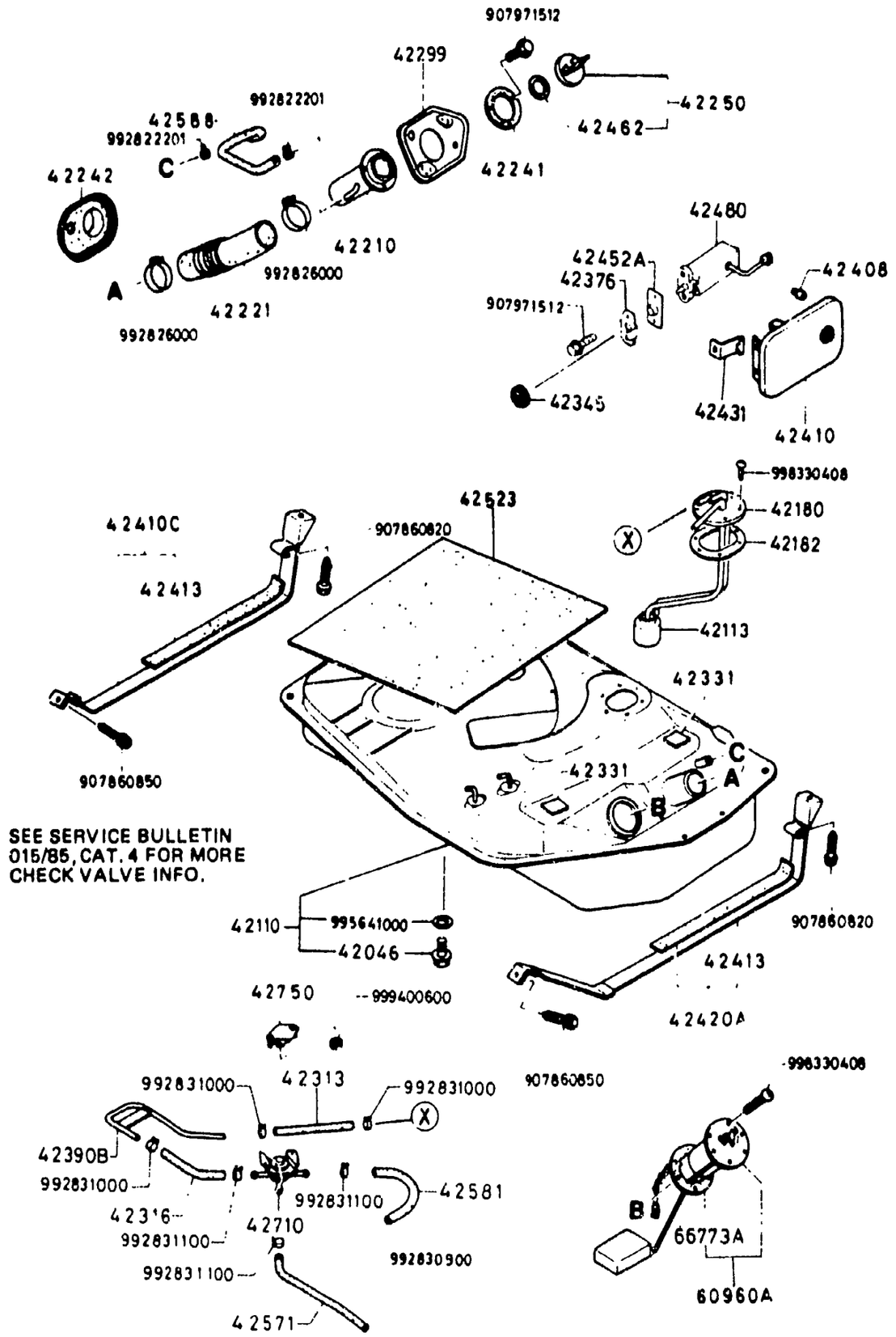

ITEM NO.	D-CODE	DESCRIPTION	PART NO.	QTY	MODEL/DESCRIPTION	REMARKS
	42 046	PLUG, DRAIN	BC88-42-045	1		
	42 110	TANK, FUEL	FA54-42-110	1	12A (S, GS, GSL)	
			FA66-42-110/	1	13B (GSL-SE)	
	42 113	FILTER, FUEL TANK	GA97-42-113	1	12A (S, GS, GSL)	
			G037-42-113A	1	13B (GSL-SE)	
	42 180	PIPE, FUEL	FA54-42-180	1	12A (S, GS, GSL)	
			FA66-42-180	1	13B (GSL-SE)	
	42 182	GASKET, FUEL PIPE	FA54-42-182	1		
	42 210	PIPE, FILLER	FA54-42-210A	1		
	42 221	HOSE, FILLER	8344-42-241	1		
	42 241	GASKET, FILLER PIPE	0866-42-366B	1		
	42 242	RUBBER, SEAL	8871-42-242A	1		
	42 250	CAP, FILLER	8871-42-250B-BP	1	(BLISTER PACK)	
	42 299	REINFORCEMENT	FA54-42-291A	1		
	42 313	TUBE, VENT	9935-10-6999	1	BULK QTY	
	42 316	HOSE, VENT	9935-10-6999	1	BULK QTY	
	42 331	SHEET	8531-42-761	2		
	42 345	GROMMET	FA01-42-453	1		
	42 376	PLATE, LOCK	H043-42-451A	1		
	42 390B	PIPE, BREATHER	8562-42-530	1		
	42 408	STOPPER, FILLER LID	0187-70-491	2		
	42 410	LID, FUEL FILLER	FA54-42-410	1		
	42 410C	BAND (R), TANK FIXTURE	8871-42-710B	1		
	42 413	SHEET	8871-42-745	2		
	42 420A	BAND (L), TANK FIXTURE	8871-42-720A	1		
	42 431	SPRING LIFT, LID	FA01-42-431B	1		
	42 452A	GROMMET	H043-42-452B	1		
	42 462	GASKET, CAP	8871-42-365	1		
	42 480	OPENER, FILLER LID	F023-42-470B	1		
	42 523	PAD, FUEL TANK	8871-42-761	1		
	42 571	HOSE, VENT	8871-42-571C	1		
	42 581	HOSE, BREATHER	F001-42-581A	1		
	42 588	HOSE, VENT	8344-42-245	1		
	42 710	VALVE, CHECK	8341-42-910A	1		
		REFER TO SERV. BULL. NO. 015/85 CAT. 4 FOR MORE INFO.				
	42 750	BRACKET, CHECK VALVE	8871-42-920	1		
	60 960A	GAUGE, FUEL TANK	FA54-60-960	1		
	66 773A	GASKET, GAUGE	8871-60-962A	1	FROM FEB. '84 PROD.	FB33* ..819695-

4300A-1 CLUTCH & BRAKE PEDALS

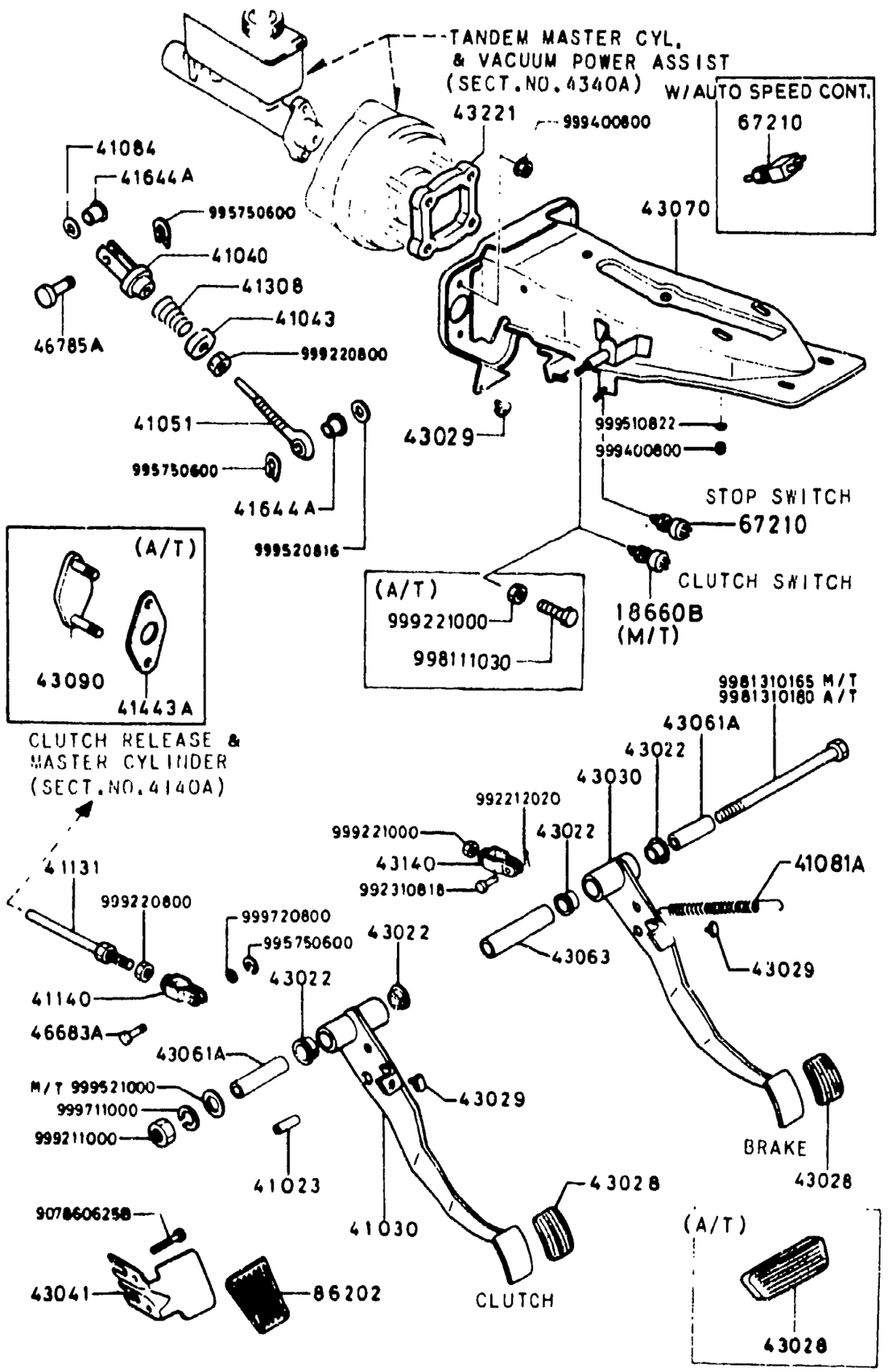

ITEM NO.	D-CODE	DESCRIPTION	PART NO.	QTY	MODEL/DESCRIPTION	REMARKS
	18 660B	SWITCH, CLUTCH	H005-66-190B	1	M/T	
	41 023	BUSHING, CLUTCH PEDAL	0727-41-023	1	M/T	
	41 030	PEDAL, CLUTCH	FA54-41-030B	1	M/T	
	41 040	SEAT, SPRING	W090-41-041	1		
	41 043	SHEET, SPRING	0183-41-043	1	M/T	
	41 051	ROD, CLUTCH PEDAL	0824-41-051A	1	M/T	
	41 081A	SPRING, RETURN	0088-41-352A	1		
	41 084	SPACER	0824-41-084	1	M/T	
	41 131	ROD, PUSH	0727-41-131	1	M/T	
	41 140	FORK, CLUTCH	0259-43-140	1	M/T	
	41 308	SPRING, RETURN	0559-41-081A	1	M/T	
	41 443A	GASKET	H001-41-443	1	A/T	
	41 644A	BUSHING	0259-41-644	2	M/T	
	43 022	BUSHING, PEDAL	1015-46-085	2	A/T	
				4	M/T	
	43 028	PAD, PEDAL	S083-43-028	2	M/T	
			0225-43-028A	1	A/T	
	43 029	RUBBER, STOPPER	B001-43-029	2	A/T	
				3	M/T	
	43 030	PEDAL, BRAKE	FA54-43-030A	1	M/T	
			FA55-43-030	1	A/T	
	43 041	REST, FOOT	FA54-43-041	1		
	43 061A	PIPE, PEDAL	0866-43-062	1	A/T	
				2	M/T	
	43 063	SPACER	FA16-43-063	1		
	43 070	BRACKET, MASTER CYLINDER	FA54-43-070B	1		
	43 090	PLATE	B672-43-090	1	A/T	
	43 140	FORK, BRAKE	1524-43-140	1		
	43 221	SPACER	B084-43-221	1		
	46 683A	PIN	0223-46-683	1	M/T	
	46 785A	PIN	0604-46-785	1	M/T	
	67 210	SWITCH, STOP	B001-66-490A	1	(W/O AUTO SPEED CONT (S, GS)	
			H003-66-490A	1	(W/AUTO SPEED CONT) (GSL, GSL-SE)	
	86 202	PAD, FOOT REST	FA01-43-042	1		

4340A-1 BRAKE MASTER CYLINDER & POWER BRAKE (REAR DRUM BRAKES) (S, GS)

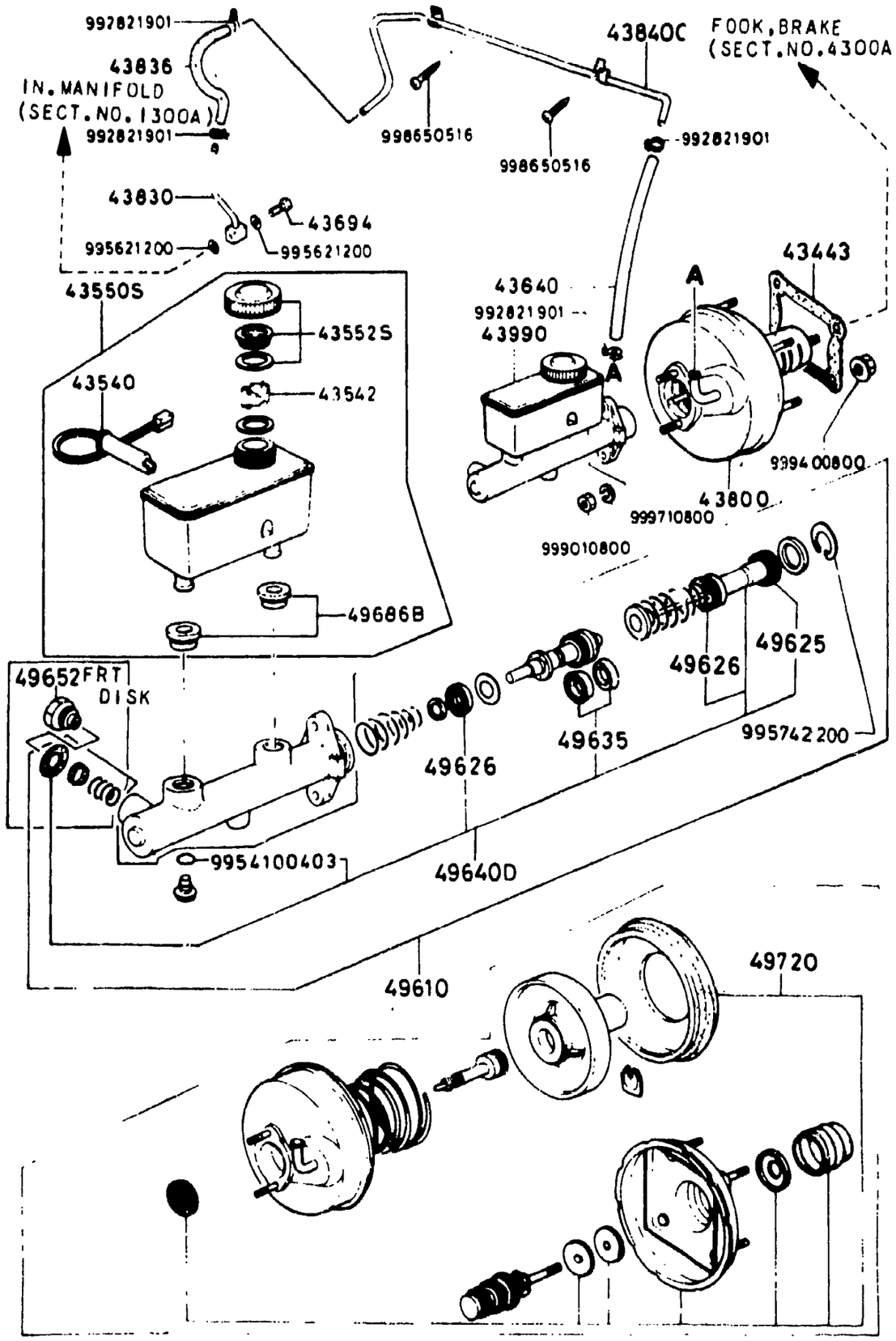

ITEM NO.	D-CODE	DESCRIPTION	PART NO.	QTY	MODEL/DESCRIPTION	REMARKS
	43 443	GASKET	H001-43-443	2		
	43 540	INDICATOR, LEVEL	3597-43-540	1		
	43 542	FLOAT	8531-43-542	1		
	43 550S	TANK SET, RESERVE	FA07-49-680	1		
	43 552S	CAP SET, RESERVE TANK	B093-49-580	1		
	43 640	HOSE, VACUUM	G[illegible] 13-640	1		
	43 694	BOLT, CONNECTOR	8573-43-694	1		
	43 800	VACUUM POWER ASSIST	FA55-43-800	1		
	43 830	PIPE, VACUUM,	1480-43-830A	1		
	43 836	HOSE, VACUUM	8871-43-836	1		
	43 840C	PIPE, VACUUM	FA01-43-840	1		
	43 990	CYLINDER, TANDEM MASTER	FA07-43-400	1		
	49 610	PARTS KIT, BRAKE MASTER	G001-49-610	1		
	49 625	CUP, SECONDARY	1128-49-625	1		
	49 626	CUP, PRIMARY	1128-49-626	2		
	49 635	CUP, FLOATING	1128-49-635	2		
	49 640D	PARTS KIT, INNER	G001-49-640	1		
	49 652	BOLT, JOINT	G001-49-652	1		
	49 686B	BUSHING, ELBOW JOINT	0305-49-686B	2		
	49 720	REPAIR KIT	FA55-49-720	1		

4340AA-1 BRAKE MASTER CYLINDER & POWER BRAKE (REAR DISK BRAKES) (GSL, GSL-SE)

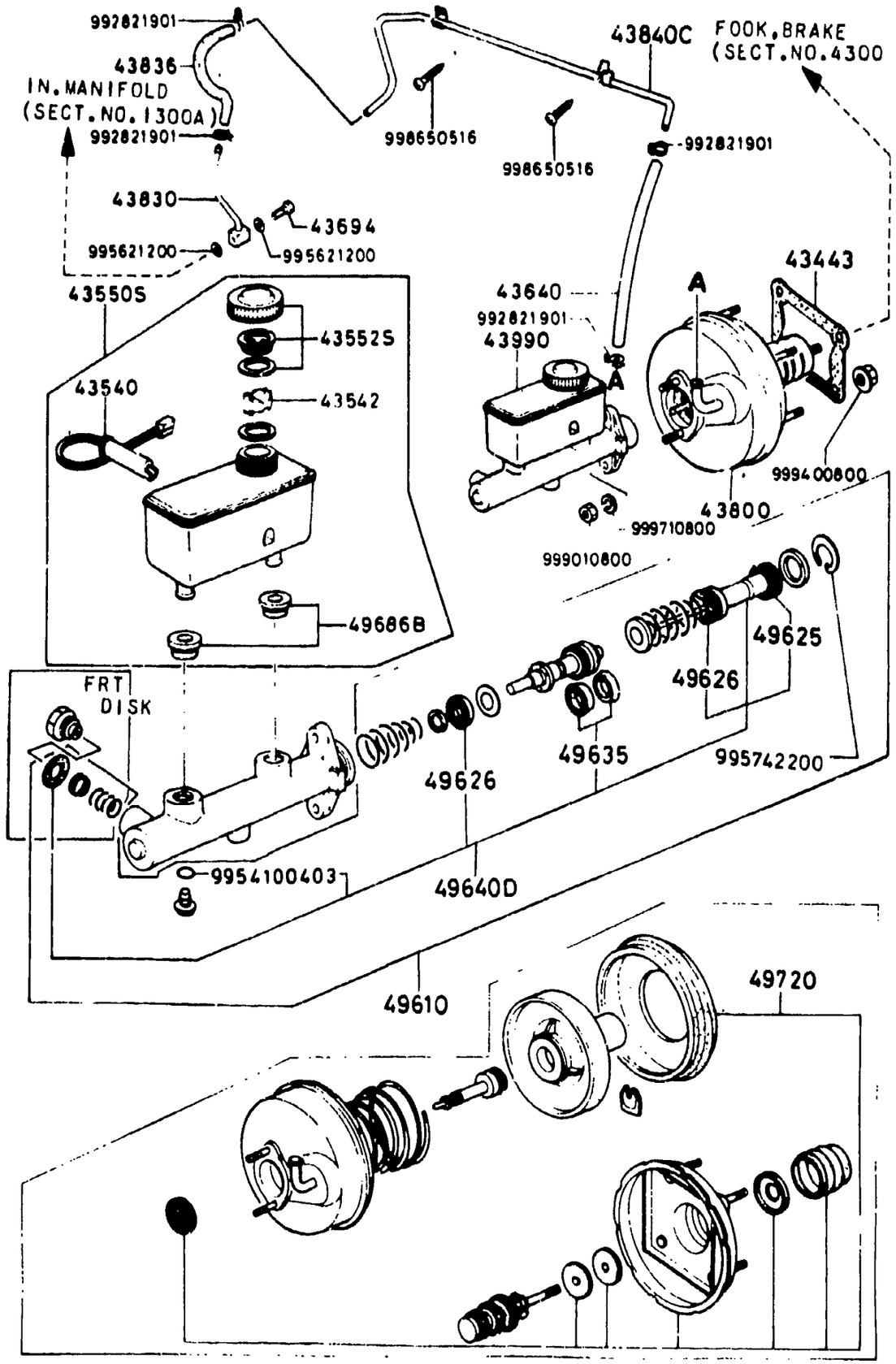

ITEM NO.	D-CODE	DESCRIPTION	PART NO.	QTY	MODEL/DESCRIPTION	REMARKS
	43 [illegible]	GASKET	H001-43-443	2		
	43 540	INDICATOR, LEVEL	3597-43-540	1		
	43 542	FLOAT	8531-43-542	1		
	43 550S	TANK SET, RESERVE	FA07-49-680	1		
	43 552S	CAP SET, RESERVE TANK	B093-49-580	1		
	43 640	HOSE, VACUUM	G001-43-640	1		
	43 694	BOLT, CONNECTOR	8573-43-694	1		
	43 800	VACUUM POWER ASSIST	FA55-43-800	1		
	43 830	PIPE, VACUUM	1480-43-830A	1	12A (GSL)	
			H202-43-830	1	13B (GSL-SE)	
	43 836	HOSE, VACUUM	8871-43-836	1	12A (GSL)	
			FA66-43-036	1	13B (GSL-SE)	
	43 840C	PIPE, VACUUM	FA01-43-840	1		
	43 990	CYLINDER, TANDEM MASTER	FA66-43-400	1		
	49 610	PARTS KIT, BRAKE MAST	HA18-49-610A	1		
	49 625	CUP, SECONDARY	FB01-49-625	1		
	49 626	CUP, PRIMARY	0305-49-626	2		
	49 635	CUP, FLOATING	FB01-49-625	2		
	49 640D	PARTS KIT, INNER	HA18-49-640	1		
	49 686B	BUSHING, ELBOW JOINT	0305-49-686B	2		
	49 720	REPAIR KIT	FA55-49-720	1		

4360A-1 BRAKE PIPING (REAR DRUM BRAKE) (S, GS)

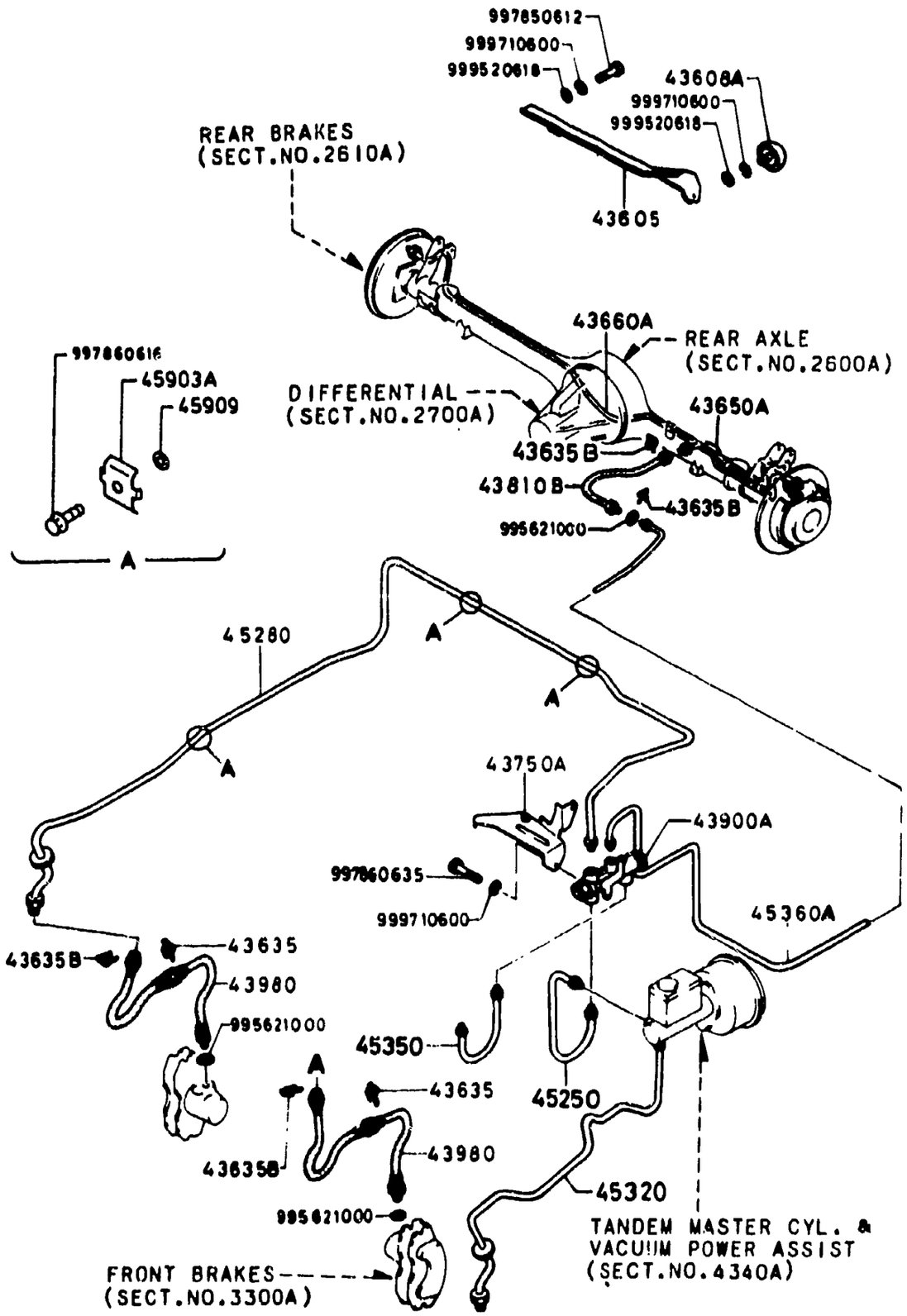

ITEM NO.	D-CODE	DESCRIPTION	PART NO.	QTY	MODEL/DESCRIPTION	REMARKS
	43 605	PROTECTOR, BRAKE PIPE	8871-43-785A	1		
	43 608A	SCREW, RUBBER	8871-43-608	1		
	43 635	CLIP, FLEXIBLE HOSE	W023-43-635	2		
	43 635B	CLIP, FLEXIBLE HOSE	W023-43-635	4		
	43 650A	PIPE (L), BRAKE-REAR	FA07-43-650	1		
	43 660A	PIPE (R), BRAKE-REAR	FA07-43-660	1		
	43 750A	HOLDER, P.B. VALVE	FA07-43-750	1		
	43 810B	HOSE NO. 1, FLEXIBLE	FA07-43-820	1		
	43 900A	VALVE, P.B.	FA07-43-900	1		
	43 980	HOSE, FLEXIBLE	FA66-43-980A	2		
	45 250	PIPE, BRAKE-FRONT	FA07-43-360	1		
	45 280	PIPE (R), BRAKE-FRONT	FA54-45-280	1	THRU OCT. '83 PROD.	FB33* ..800001-806530
			FA54-45-280B	1	FROM NOV. '83 PROD.	FB33* ..806531-
	45 320	PIPE (L), BRAKE-FRONT	FA54-45-320A	1	THRU OCT. '83 PROD.	FB33* ..800001-806530
			FA54-45-320C	1	FROM NOV. '83 PROD.	FB33* ..806531-
	45 350	PIPE, BRAKE-REAR	FA07-43-370	1		
	45 360A	PIPE, BRAKE-REAR	FA54-45-360	1		
	45 903A	CLIP	8173-45-903	2		
	45 909	WASHER	8173-45-909	2		

4360AA-1 BRAKE PIPING (REAR DISC BRAKE) (GSL, GSL-SE)

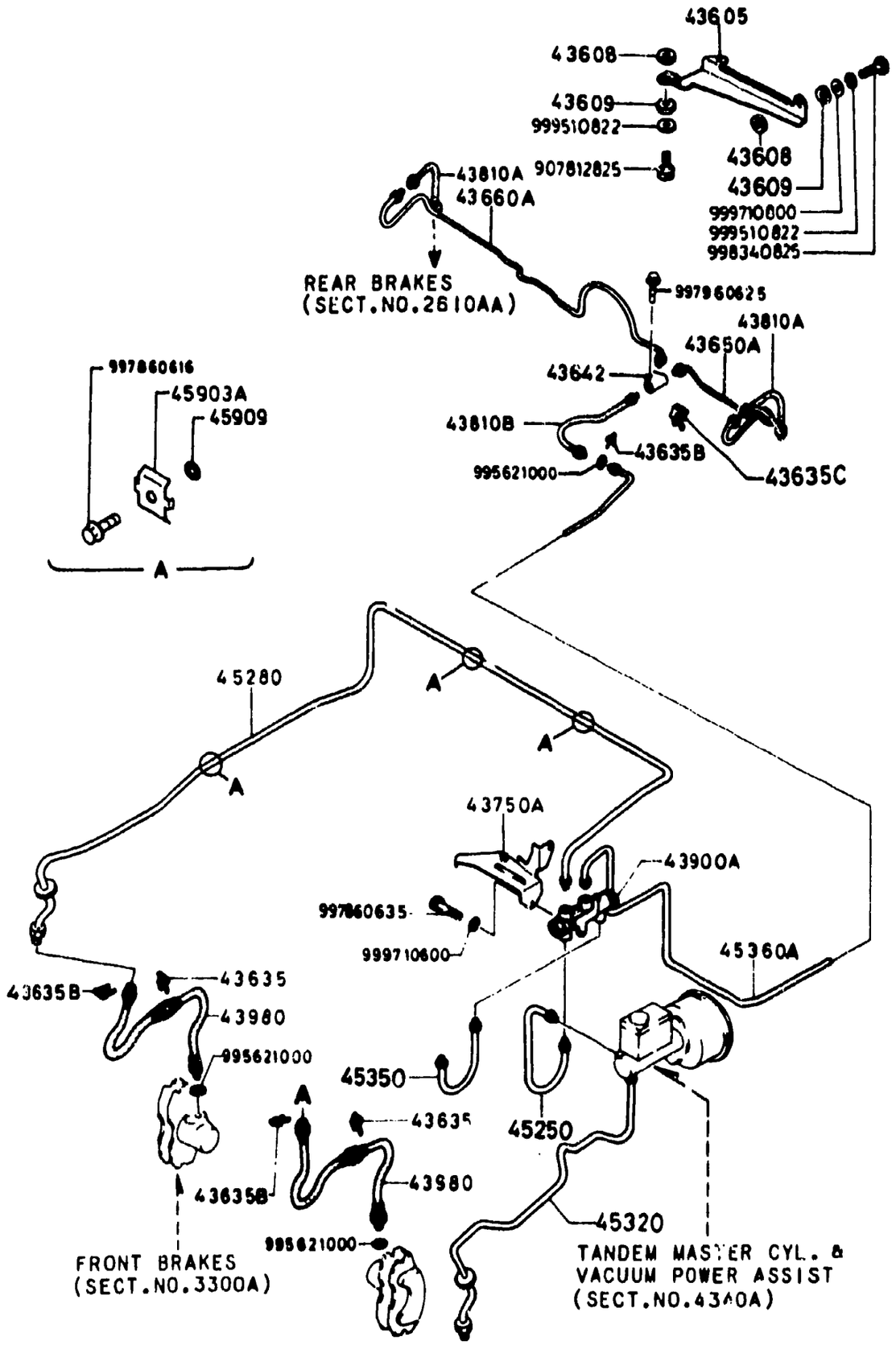

ITEM NO.	D-CODE	DESCRIPTION	PART NO.	QTY	MODEL/DESCRIPTION	REMARKS
	43 605	PROTECTOR, BRAKE PIPE	FA18-43-605A	1		
	43 608	SPACER	1114-43-608B	3		
	43 609	RUBBER, CUSHION	1114-43-609A	3		
	43 635	CLIP, FLEXIBLE HOSE	W023-43-635	2		
	43 635B	CLIP, FLEXIBLE HOSE	W023-43-635	3		
	43 635C	CLIP, HOSE	W023-43-635	2		
	43 642	JOINT	FA18-43-642A	1		
	43 650A	PIPE (L), BRAKE-REAR	FA18-43-650	1		
	43 660A	PIPE (R), BRAKE-REAR	FA18-43-660	1		
	43 750A	HOLDER, P.B. VALVE	FA07-43-750	1		
	43 810A	HOSE NO. 1, FLEXIBLE	FA18-43-810	2		
	43 810B	HOSE NO. 1, FLEXIBLE	FA18-43-820A	1		
	43 900A	VALVE, P.B.	FA66-43-900	1		
	43 980	HOSE, FLEXIBLE	FA66-43-980A	2		
	45 250	PIPE, BRAKE-FRONT	FA07-43-360	1		
	45 280	PIPE (R), BRAKE-FRONT	FA54-45-280B	1		
	45 320	PIPE (L), BRAKE-FRONT	FA54-45-320C	1		
	45 350	PIPE, BRAKE-REAR	FA07-43-370	1		
	45 360A	PIPE, BRAKE-REAR	FA54-45-360	1		
	45 903A	CLIP	8173-45-903	2		
	45 909	WASHER	8173-45-909	2		

4400A-1 PARKING BRAKE SYSTEM

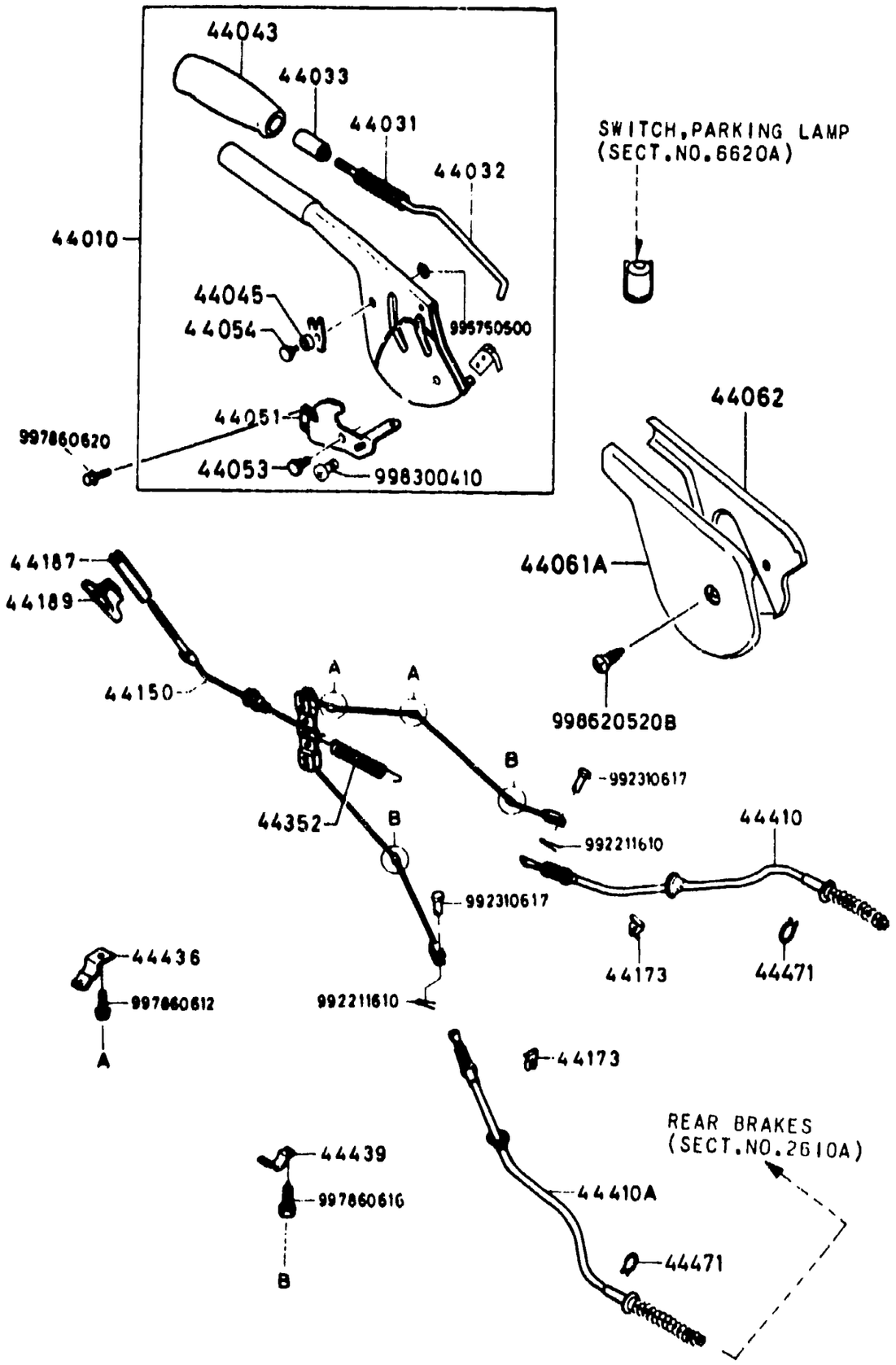

ITEM NO.	D-CODE	DESCRIPTION	PART NO.	QTY	MODEL/DESCRIPTION	REMARKS
	44 010	LEVER, PARKING BRAKE	FA54-44-010E	1		
		RED	10			
		OFF-BLACK	65			
		LIGHT BROWN	78			
	44 031	SPRING	FA54-44-031	1		
	44 032	ROD, RELEASE	FA54-44-032	1	THRU SEP. '83 PROD.	FB33* ..800001-800881
	44 033	BUTTON, RELEASE	0221-44-033	1		
		BLACK	00			
		RED	10			
		OFF-BLACK	65			
		LIGHT BROWN	78			
	44 043	CAP	FA54-44-034	1		
		RED	10			
		OFF-BLACK	65			
		LIGHT BROWN	78			
	44 045	STOPPER	B001-44-045	1		
	44 051	SECTOR	FA54-44-051	1		
	44 053	BOLT, HAND BRAKE LEVER	B037-44-053	1		
	44 054	PIN	B037-44-054	1		
	44 061A	COVER	FA54-44-061B	1		
		RED	10			
		OFF-BLACK	65			
		LIGHT BROWN	78			
	44 062	COVER	FA54-44-062B	1		
		RED	10			
		OFF-BLACK	65			
		LIGHT BROWN	78			
	44 150	CABLE, FRONT-PARK BRAKE	1480-44-150A	1		
	44 173	CLIP	0118-44-375	1		
	44 187	SCREW	0866-44-187A	1		
	44 189	CLIP	0866-44-189	1		
	44 352	SPRING, RETURN	0613-41-308	1		
	44 410	CABLE (R), REAR-PARK	FA16-44-410B	1	12A (GSL) (REAR DISC BRAKE)	
			FA54-44-410A	1	12A (S, GS) (REAR DRUM BRAKE)	
			FA66-44-410	1	13B (GSL-SE)	
	44 410A	CABLE (L), REAR-PARK	FA16-44-420A	1	12A (GSL) (REAR DISC BRAKE)	
			FA54-44-420A	1	12A (S, GS) (REAR DRUM BRAKE)	
			FA66-44-420	1	13B (GSL-SE)	

4400A-2 PARKING BRAKE SYSTEM

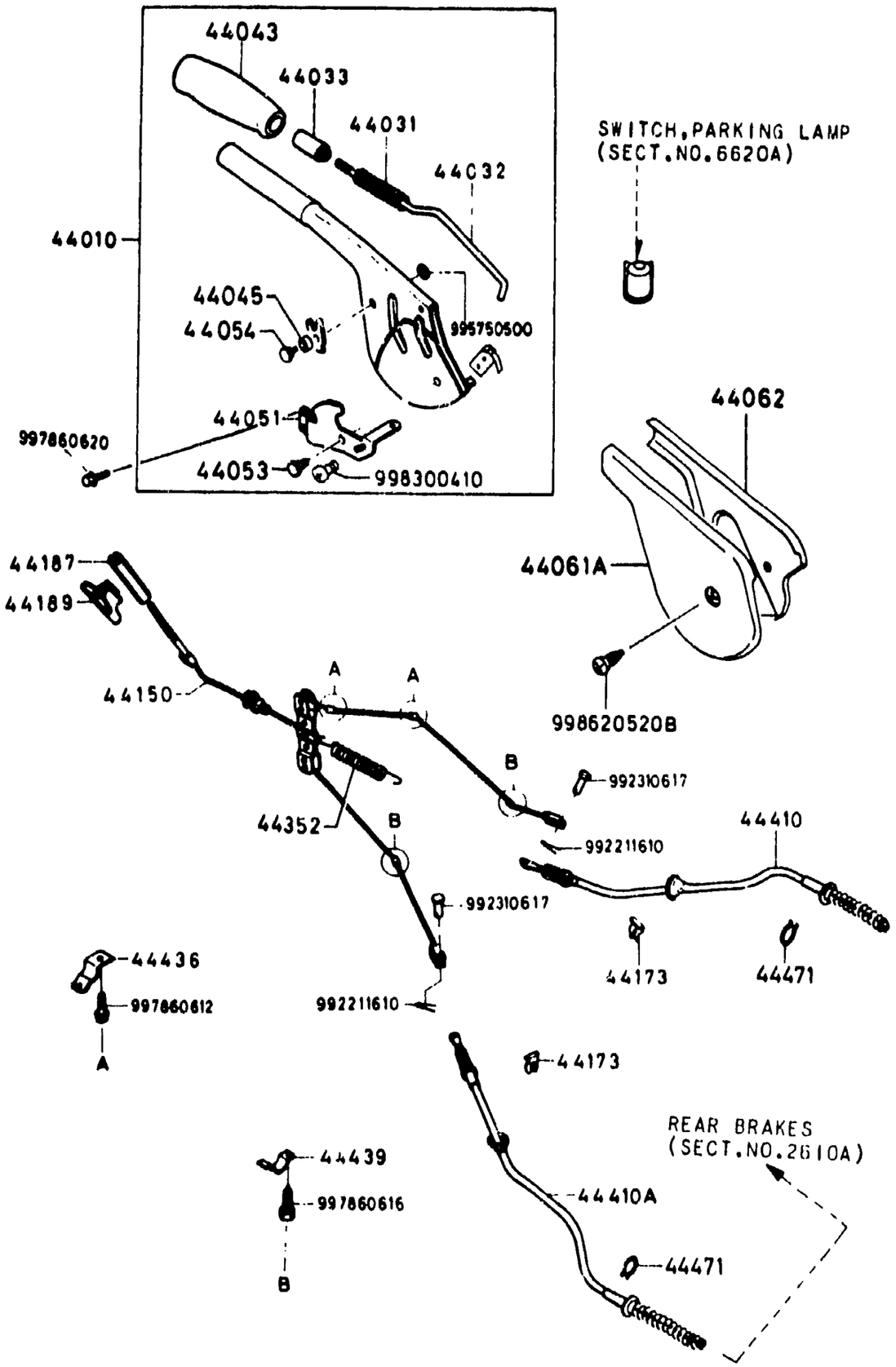

ITEM NO.	D-CODE	DESCRIPTION	PART NO.	QTY	MODEL/DESCRIPTION	REMARKS
	44 436	CLIP	8871-44-439	2		
	44 439	CLIP, CABLE	1011-44-439	2		
	44 471	CLIP	0305-44-471	2		

4500A-1 FUEL PIPINGS

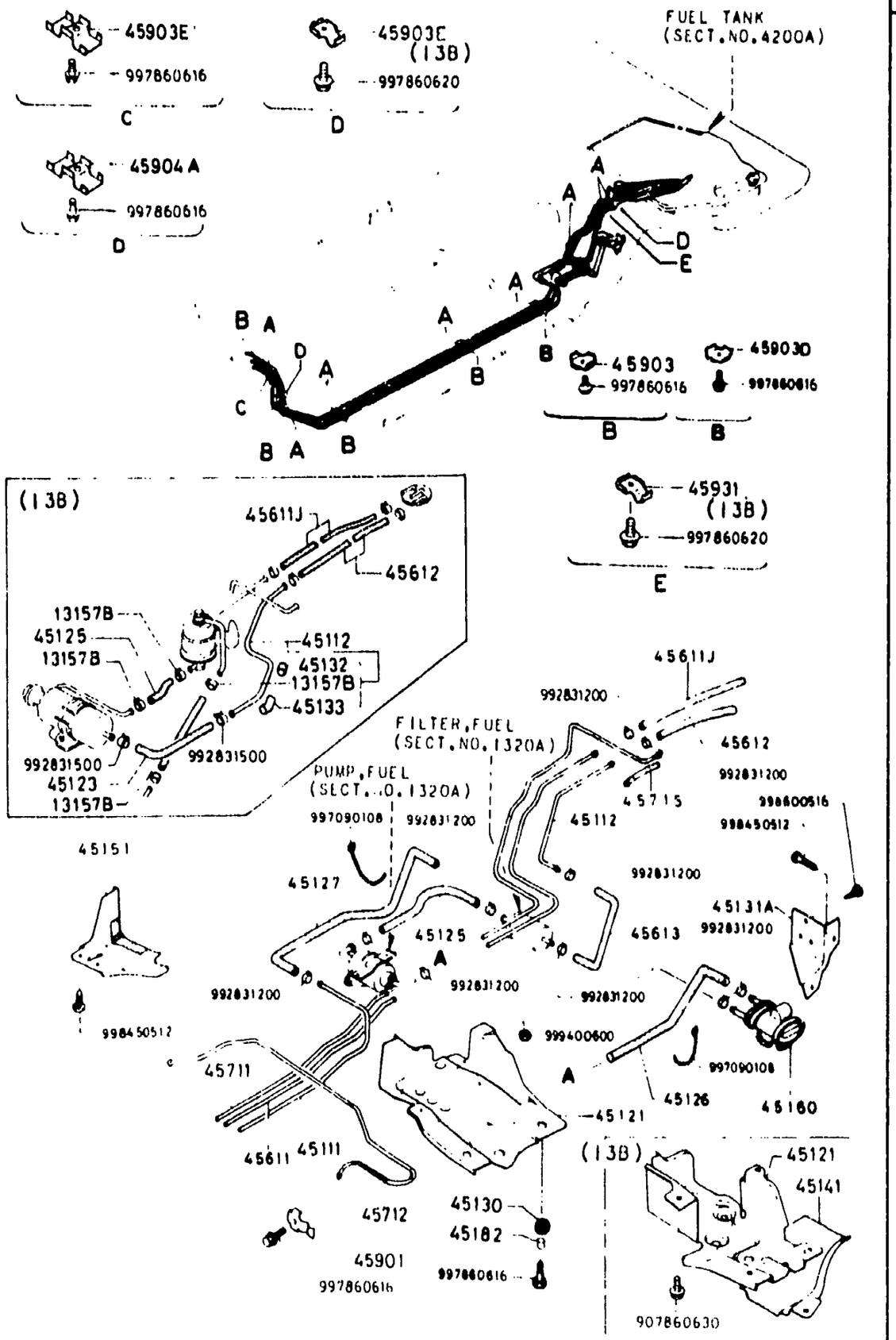

ITEM NO.	D-CODE	DESCRIPTION	PART NO.	QTY	MODEL/DESCRIPTION	REMARKS
	13 157B	CLIP	8574-13-157	4	13B (GSL-SE)	
	42 133	RUBBER, MTG.	FA66-45-133	1	13B (GSL-SE)	
	45 111	PIPE, FUEL MAIN	FA42-45-111C	1	12A (S, GS, GSL)	
			FA66-45-111B	1	13B (GSL-SE)	
	45 112	PIPE, FUEL MAIN	FA01-45-112	1	12A (S, GS, GSL)	
			FA66-45-130A	1	13B (GSL-SE)	
	45 121	BRACKET, FUEL PUMP	FA23-45-160A	1	12A (S, GS, GSL)	
			FA66-45-160B	1	13B (GSL-SE)	
	45 123	HOSE, FUEL	FA66-45-123A	1	13B (GSL-SE)	
	45 125	HOSE, FUEL	9935-80-8999	1	12A (S, GS, GSL) BULK QTY	
			N326-13-416	1	13B (GSL-SE)	
	45 126	HOSE, FUEL	FA42-45-125	1	12A (S, GS, GSL)	
	45 127	HOSE, FUEL MAIN	FA42-45-126A	1	12A (S, GS, GSL)	
	45 130	RUBBER, PUMP MOUNTING	FA23-45-181	3	12A (S, GS, GSL)	
	45 131A	BRACKET, CUT VALVE	8871-45-131A	1	12A (S, GS, GSL)	
	45 132	RUBBER, MTG.	FA66-45-132	2	13B (GSL-SE)	
	45 141	COVER, FILTER	FA66-45-141A	1	13B (GSL-SE)	
	45 151	PROTECTOR, FUEL PUMP	FA23-45-190A	1	12A (S, GS, GSL)	
	45 160	VALVE-FUEL CUT	3919-45-170A	1	12A (S, GS, GSL)	
	45 182	SPACER, MOUNT RUBBER	FA23-45-182	3	12A (S, GS, GSL)	
	45 611	PIPE, FUEL RETURN	FA4.-45-611D	1	12A (S, GS, GSL)	
			FA66-45-611B	1	13B (GSL-SE)	
	45 611J	HOSE, FUEL RETURN	9935-80-6999	1	12A (S, GS, GSL) BULK QTY	
			9935-80-8999	1	13B (GSL-SE) BULK QTY	
	45 612	HOSE, FUEL	9935-80-8999	1	12A (S, GS, GSL) BULK QTY.	
			9935-81-2999	1	13B (GSL-SE) BULK QTY. THRU JAN. '84 PRC J.	FB33* .800001-823267
			FA66-42-621	1	13B (GSL-SE) FROM FEB '84 PROD.	FB33* . 823268-
	45 613	HOSE, FUEL	8344-45-123	1	12A (S, GS, GSL)	
	45 711	PIPE, EVAPORATION	FA42-45-711C	1		
	45 712	PIPE, EVAPORATION	FA42-45-712B	1	12A (S, GS, GSL)	
			FA66-45-712A	1	13B (GSL-SE)	
	45 715	PROTECTOR, PIPE	8871-45-715	1		
	45 901	CLIP, PIPE	8173-45-901A	1		
	45 903	CLIP, PIPE	8173-45-903	8	12A (S, GS, GSL)	
				1	13B (GSL-SE)	
	45 903D	CLIP, PIPE	8171-45-903A	5	12A (S, GS, GSL)	
				12	13B (GSL-SE)	

4500A-2 FUEL PIPINGS

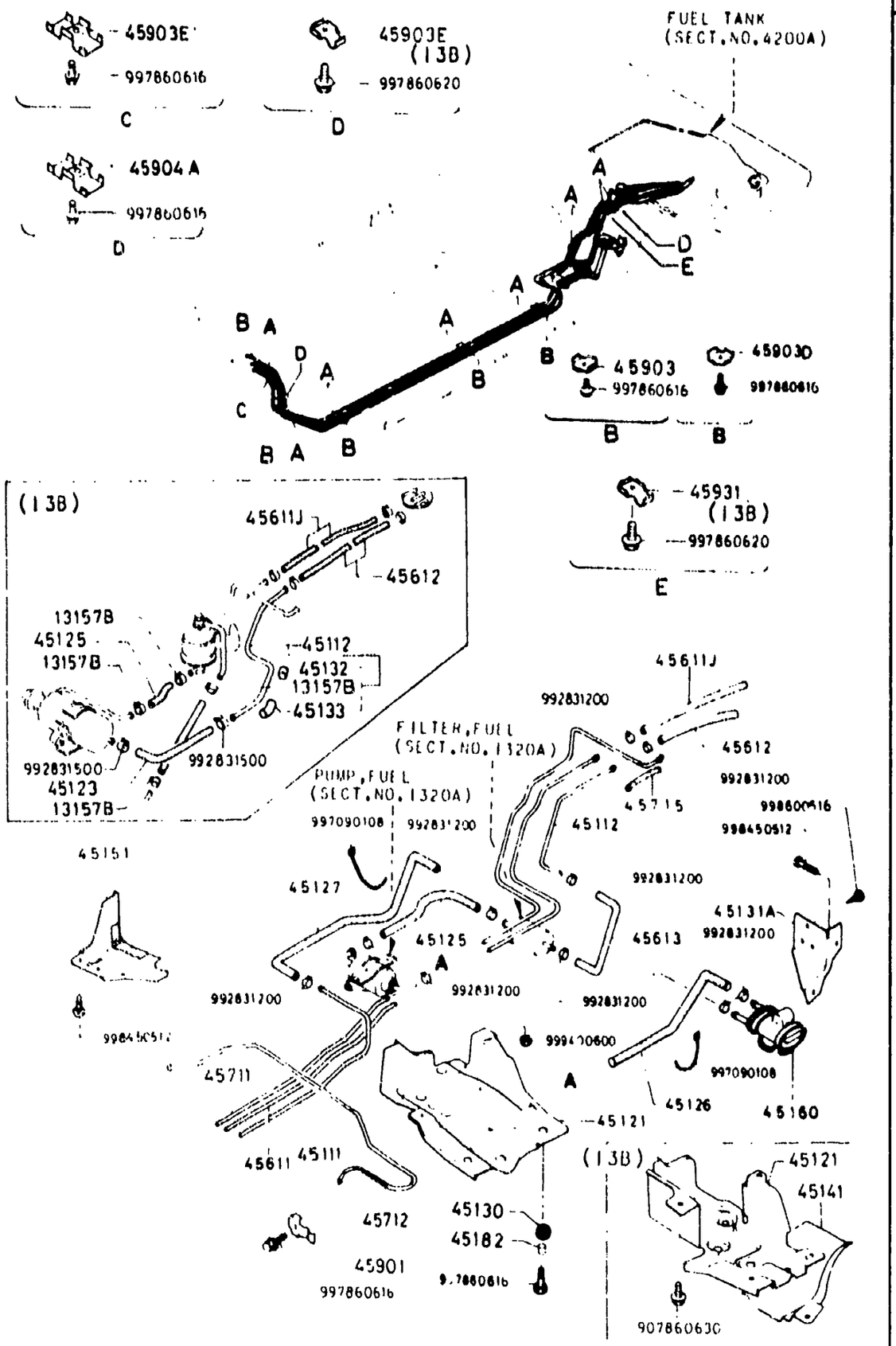

ITEM NO.	D-CODE	DESCRIPTION	PART NO	QTY	MODEL/DESCRIPTION	REMARKS
	45 903E	CLIP	FA42-45-903	1	12A (S, GS, GSL)	
			FA66-45-903	2	13B (GSL-SE)	
	45 904A	CLIP, PIPE	FA42-45-904	1	12A (S, GS, GSL)	
	45 931	CLIP, PIPE	FA66-45-931	1	13B (GSL-SE)	

4600A-1 CHANGE CONTROLS (A/T)

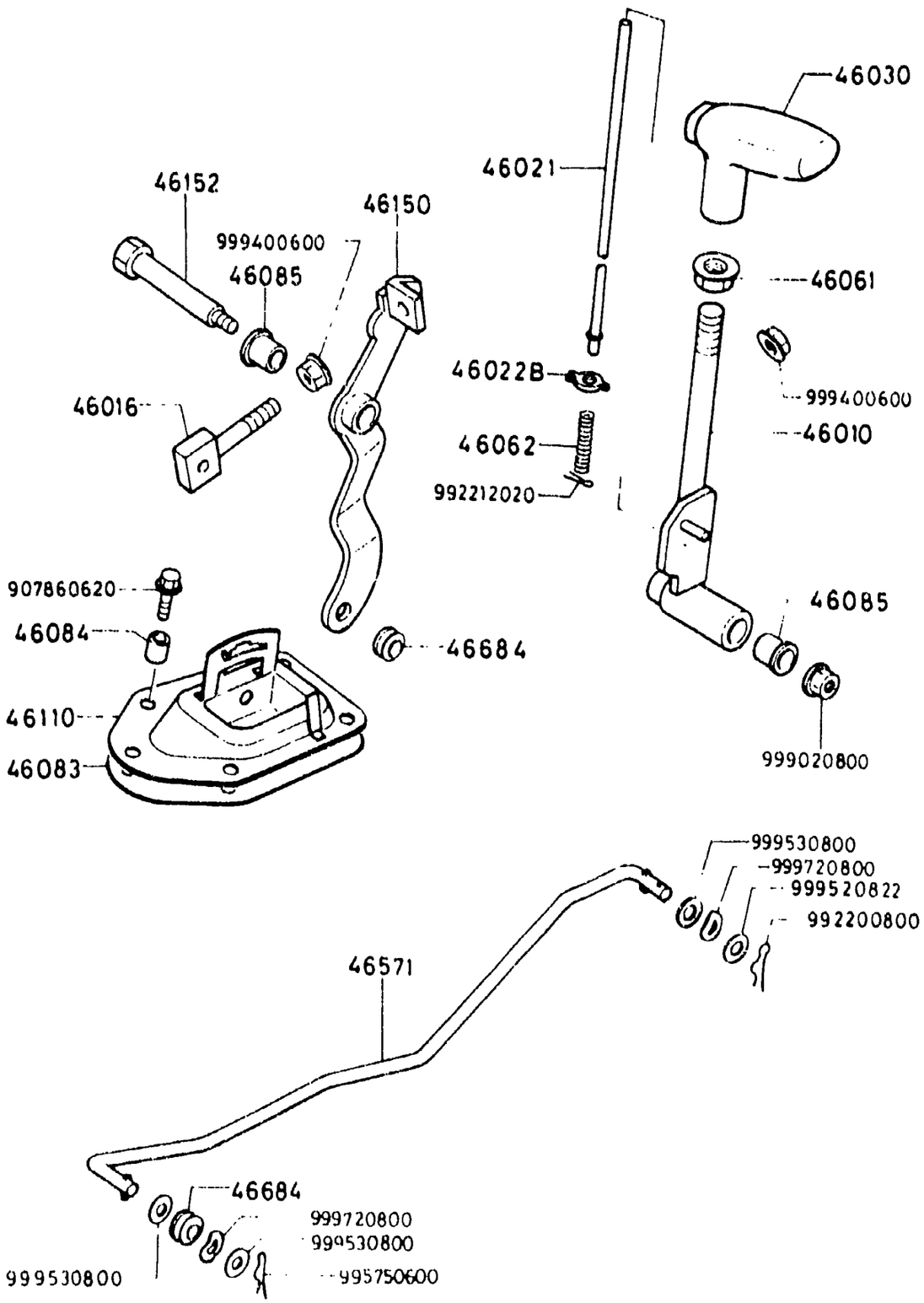

ITEM NO.	D-CODE	DESCRIPTION	PART NO	QTY	MODEL/DESCRIPTION	REMARKS
	46 010	LEVER, SELECT	FA55-46-010	1		
	46 016	BOLT	H002-46-016A	1		
	46 021	ROD	FA55-46-021	1		
	46 022B	PIN, GUIDE	8174-46-022	1		
	46 030	KNOB, CHANGE LEVER	FA55-46-030	1		
		RED	10			
		OFF-BLACK	65			
		BROWN	78			
	46 061	NUT	8202-46-061A	1		
	46 062	SPRING	2375-46-062	1		
	46 083	RUBBER, SEAL	FA55-46-083	1		
	46 084	SPACER	1481-46-084A	5		
	46 085	BUSHING	H002-46-085	2		
	46 110	BRACKET, LEVER	FA55-46-110A	1		
	46 150	LEVER	FA55-46-150	1		
	46 152	SPINDLE	H002-46-152	1		
	46 571	ROD	FA55-46-571	1		
	46 684	BUSHING	1015-46-684A	2		