Parts Catalog

Mazda RX-7

('86-'88)

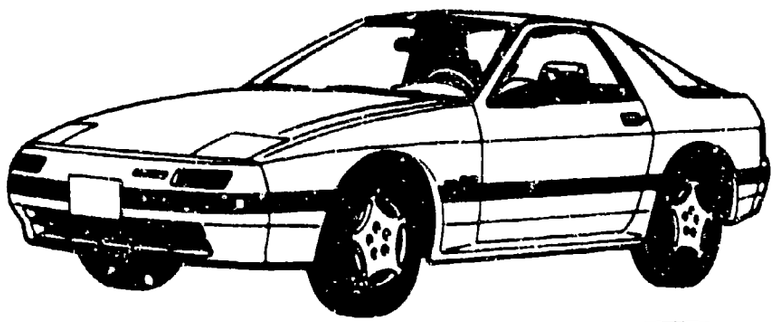

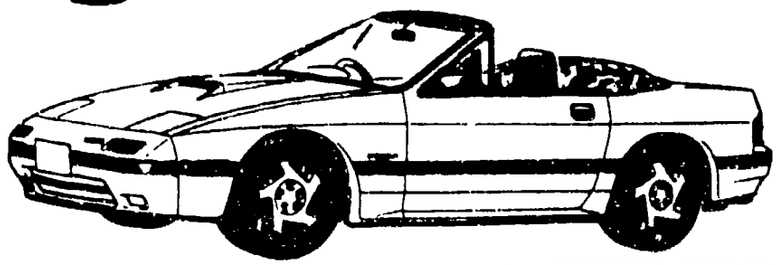

FC33•-100001~
FC351-100001~

August 1991

mazda

PICTORIAL INDEX

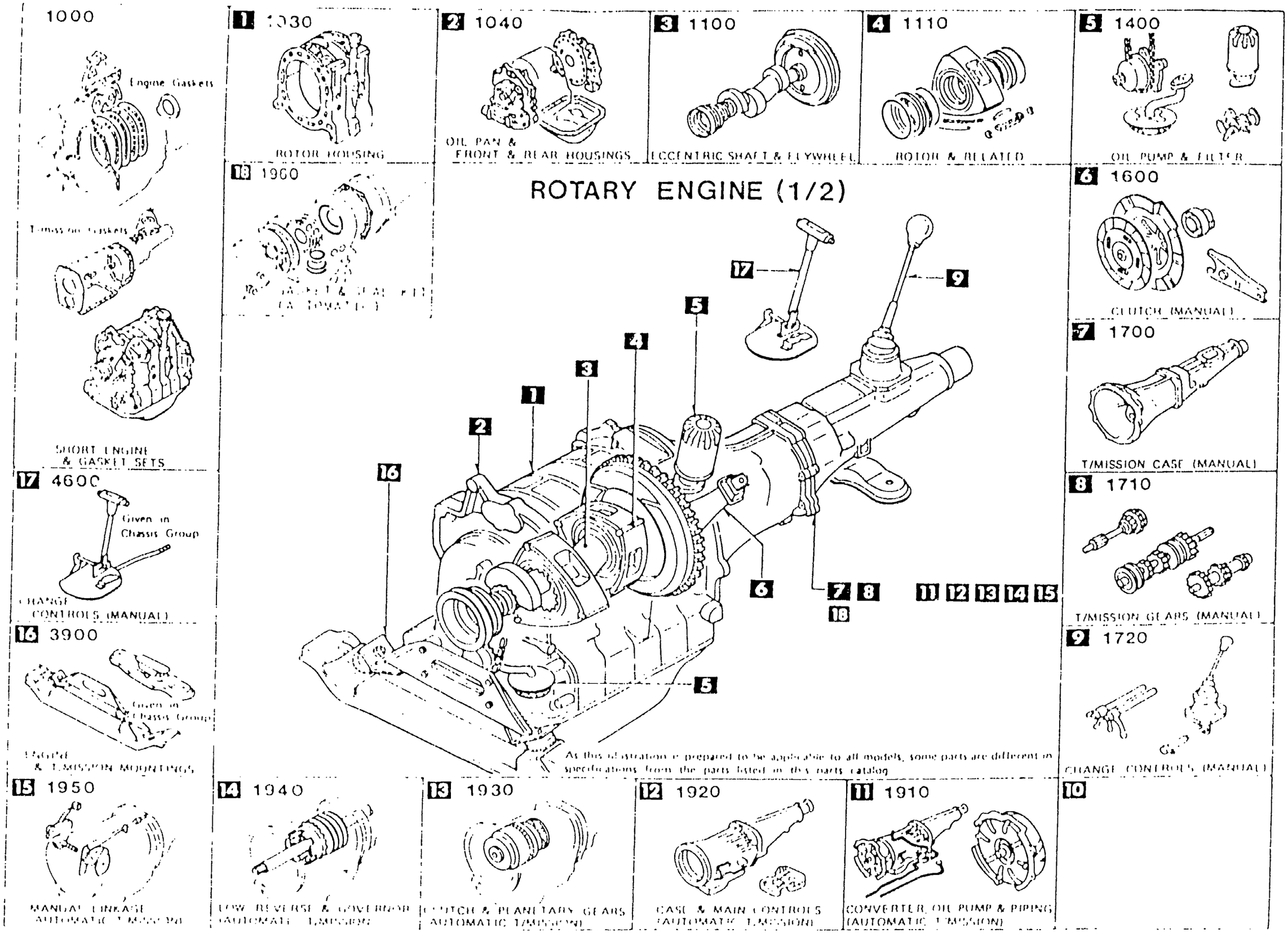

As this illustration is prepared to be applicable to all models, some parts are different in specifications from the parts listed in this parts catalog

PICTORIAL INDEX

1 1300

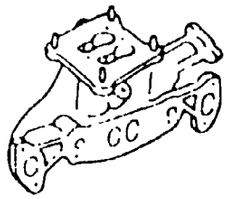

IN MANIFOLD

2 1310

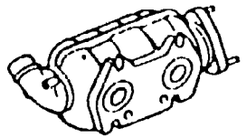

THERMAL REACTOR

3 1320

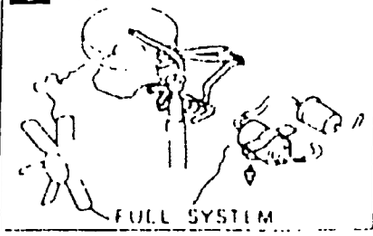

FULL SYSTEM

4 1330

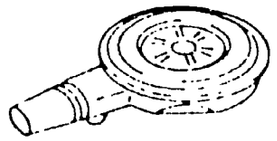

AIR CLEANER

5 1350

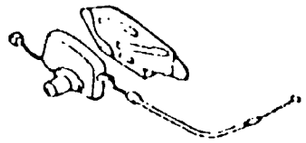

STARTING ASSIST SYSTEM

6 1364



THROTTLE BODY

ROTARY ENGINE (2/2)

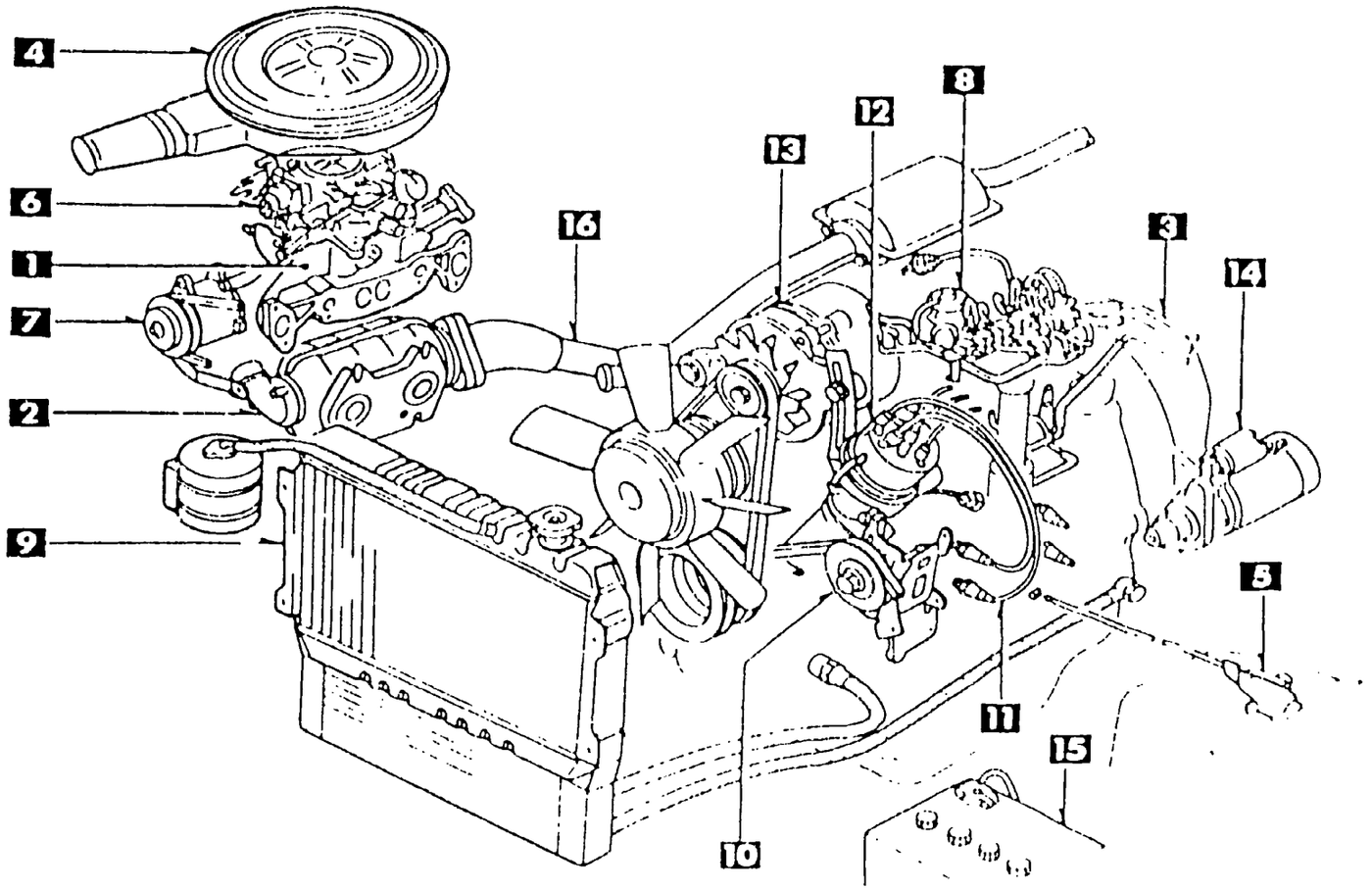

As this illustration is prepared to be applicable to all models, some parts may different in specifications from the parts listed in this parts catalog.

7 1371



EMISSION CONTROLS (AIR PUMP & CONTROL VALVE)

8 1380



EMISSION CONTROLS (EX. SIDE)

9 1500

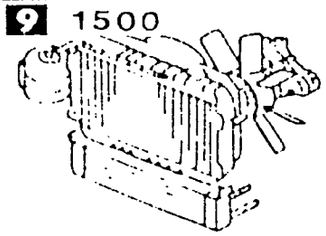

COOLING SYSTEM

10 1580



16 4000

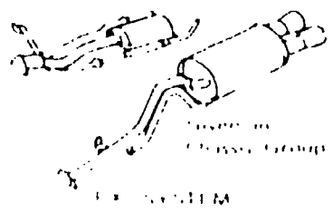

15 1850

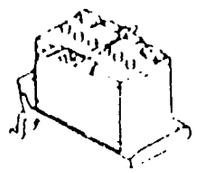

BATTERY

14 1840

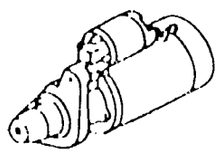

STARTER

13 1830



ALTERNATOR

12 1820

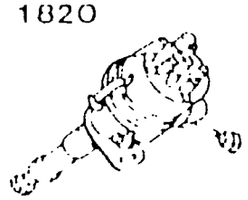

DISTRIBUTOR

11 1800



ELECTRICAL SYSTEM (ENGINE)

PICTORIAL INDEX

1 2500

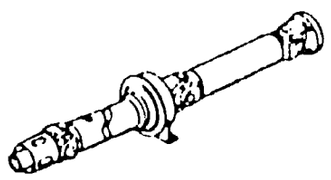

PROPELLER SHAFT

2 2550



REAR DRIVE SHAFTS

2600



REAR AXLE

3 2610



REAR BRAKE MECHANISMS

4 2710

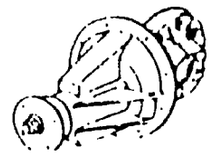

DIFFERENTIAL (REAR)

5 2800
2810

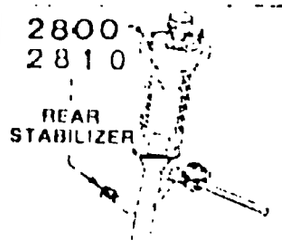

REAR SUSPENSION MECHANISMS

16 4600

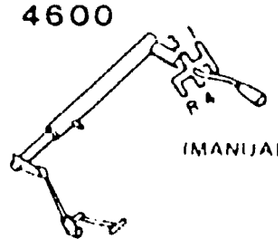

(MANUAL)

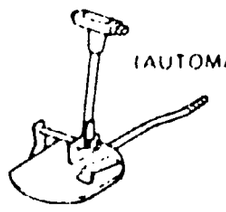

(AUTOMATIC)

CHANGE CONTROLS

17 1720

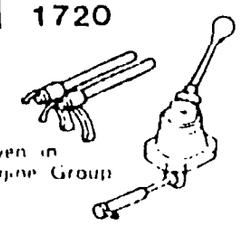

CHANGE CONTROLS (MANUAL)

CHASSIS (1/2)

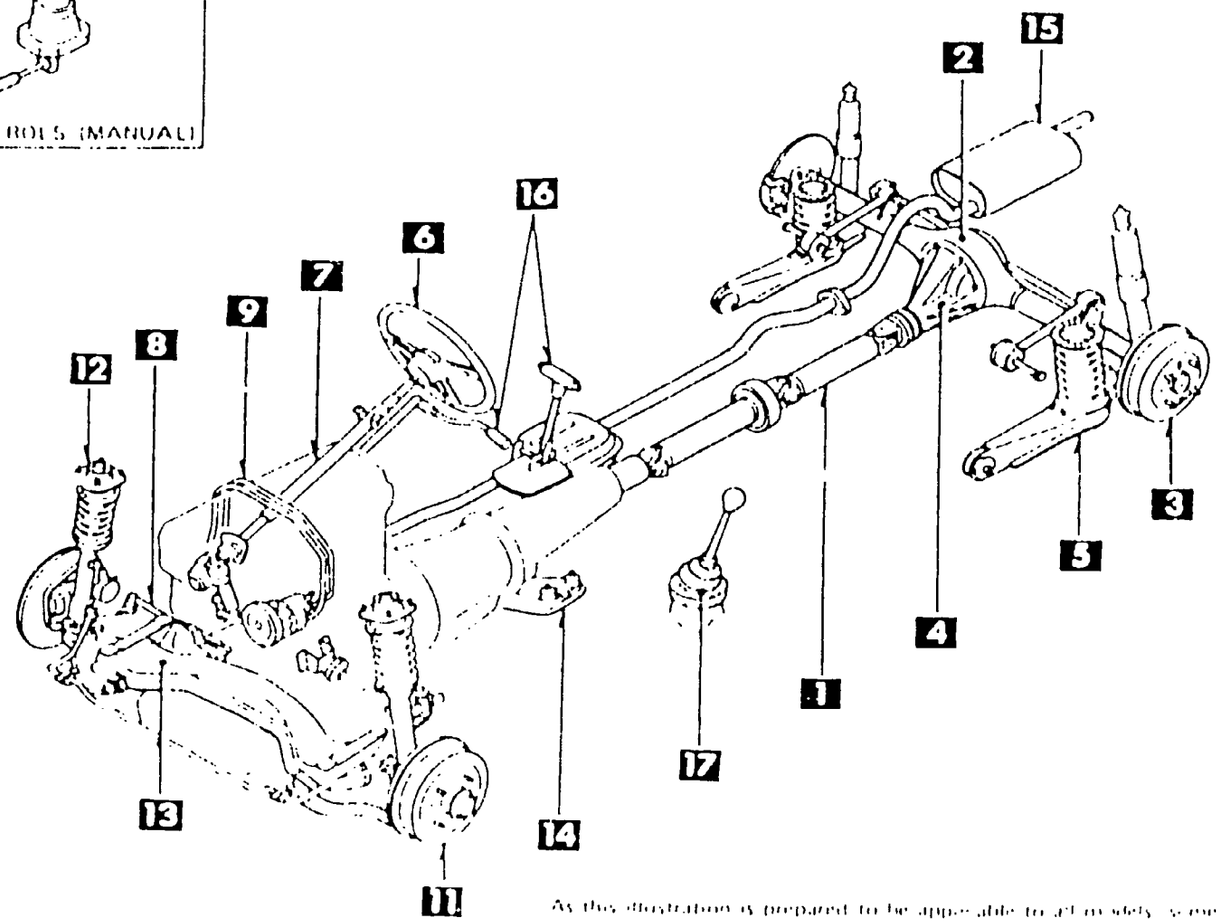

2830

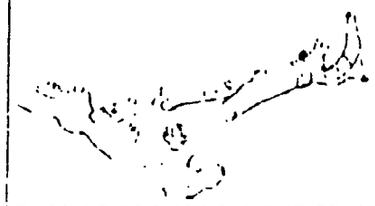

REAR LOWER ARMS & SUB FRAME

6 3200



STEERING WHEEL

15 4000

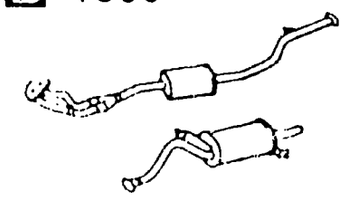

EX SYSTEM

7 3210

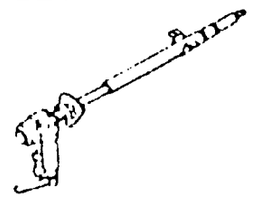

STEERING GEAR & COLUMN

14 3900



ENGINE
& TRANSMISSION MOUNTINGS

8 3220 3230



STEERING GEAR

STEERING LINKAGE SYSTEM

13 3410

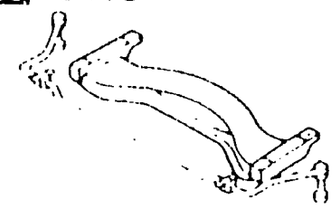

CROSSMEMBER & STABILIZER

12 3400

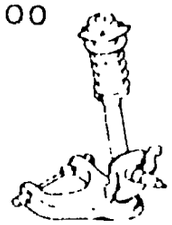

FRONT SUSPENSION

11 3300



FRONT AXLE & BRAKES

10

9 3240



POWER STEERING SYSTEM

As this illustration is prepared to be applicable to all models, some parts or
differ in their specifications from the parts listed in this parts catalog.

PICTORIAL INDEX

CHASSIS (2/2)

1 3700

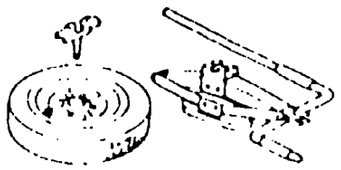

TIRE & JACK

2 4140

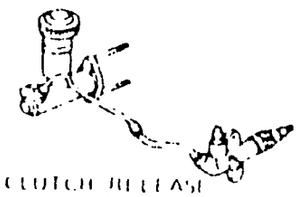

CLUTCH RELEASE & MASTER CYLINDERS

3 4160

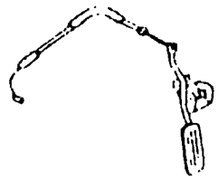

ACCELERATOR CONTROLS

4 4200

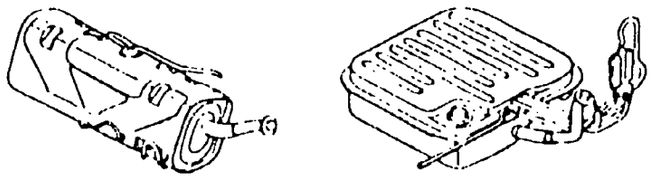

FUEL TANK

5 4300

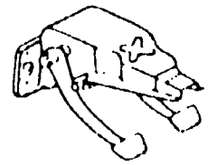

CLUTCH & BRAKE

6

7 4340

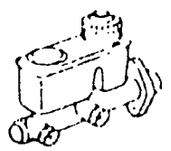

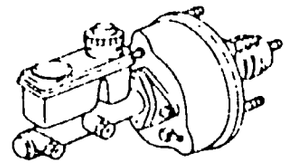

TANDEM MASTER CYL. & VACUUM POWER ASSIST SYSTEM

8 4360



BRAKE PIPING

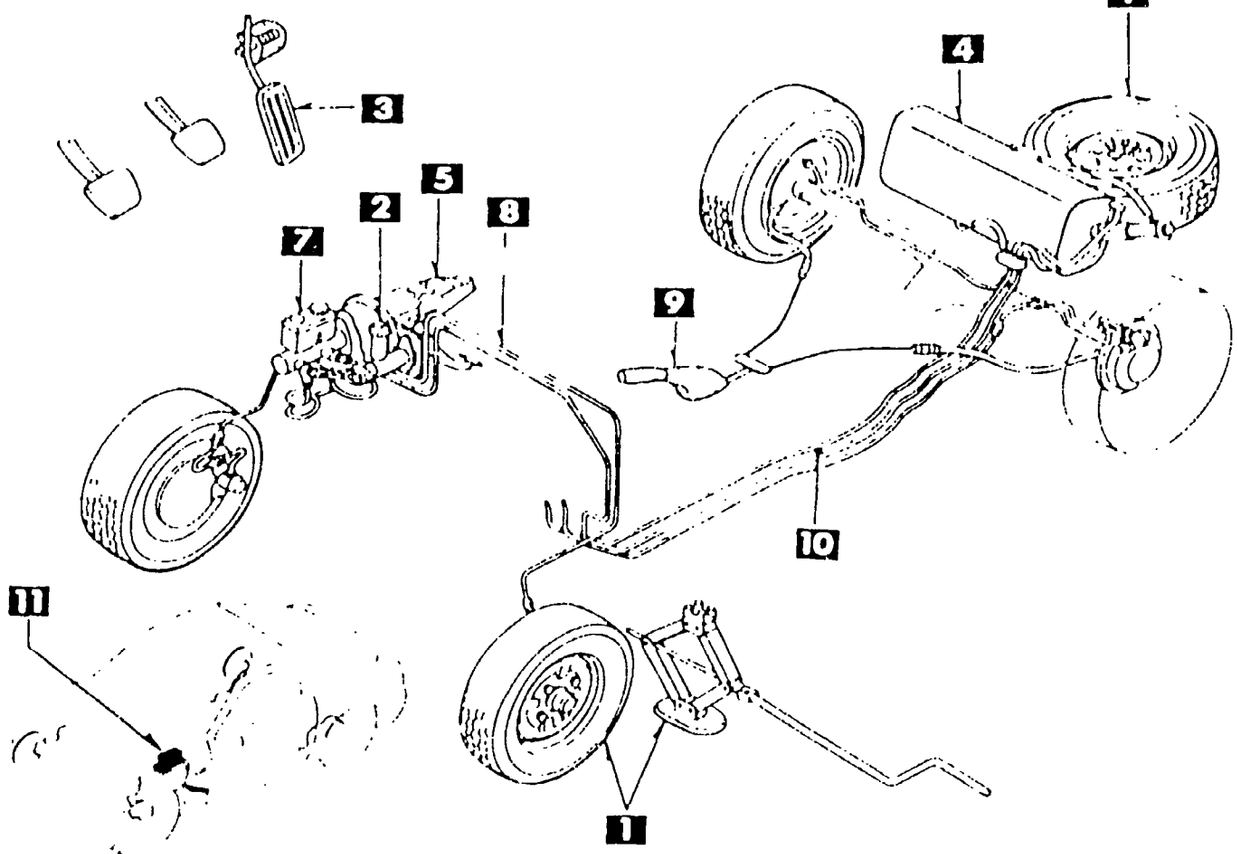

As this illustration is prepared to be applicable to all models, some parts are not used on specific items from the parts listed in this parts catalog.

11 4370



ANTI-LOCK BRAKE SYSTEM

10 4500



FUEL & EVAPORATION PIPING

9 4400

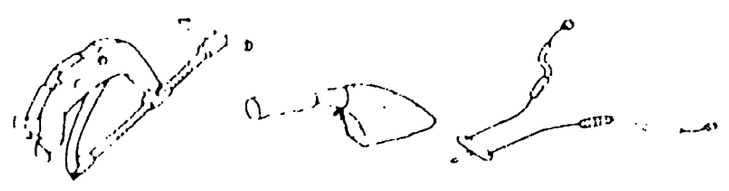

PARKING BRAKE SYSTEM

PICTORIAL INDEX

1 0900



KEY SETS

2 5020

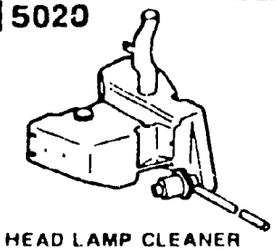

HEAD LAMP CLEANER

3 5100



HEAD LAMPS

4 5103

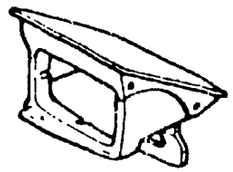

HEAD LAMP RETRACTORS

5 5105

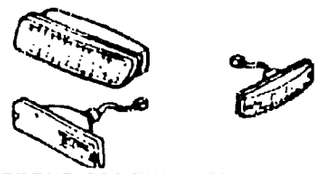

FRONT COMBINATION LAMPS

6 5110

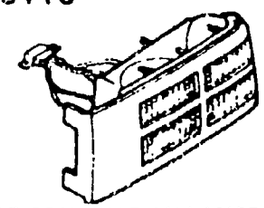

REAR COMBINATION LAMPS

19 6704

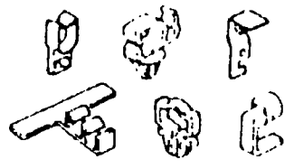

WIRING HARNESS CLAMPS

20 6720

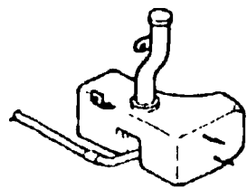

WINDSHIELD WASHER

21 6730

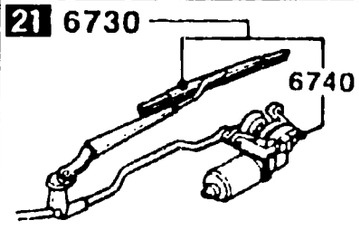

WINDSHIELD WIPERS

22 6750

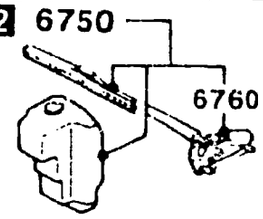

WINDOW WIPER & WASHER (REAR)

7 5120

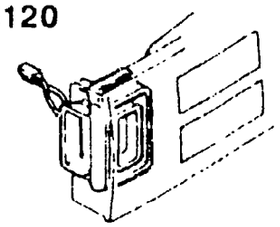

LICENSE LAMPS

18 6703



WIRING HARNESSES (DOOR, FLOOR/CEILING)

BODY (1/4)

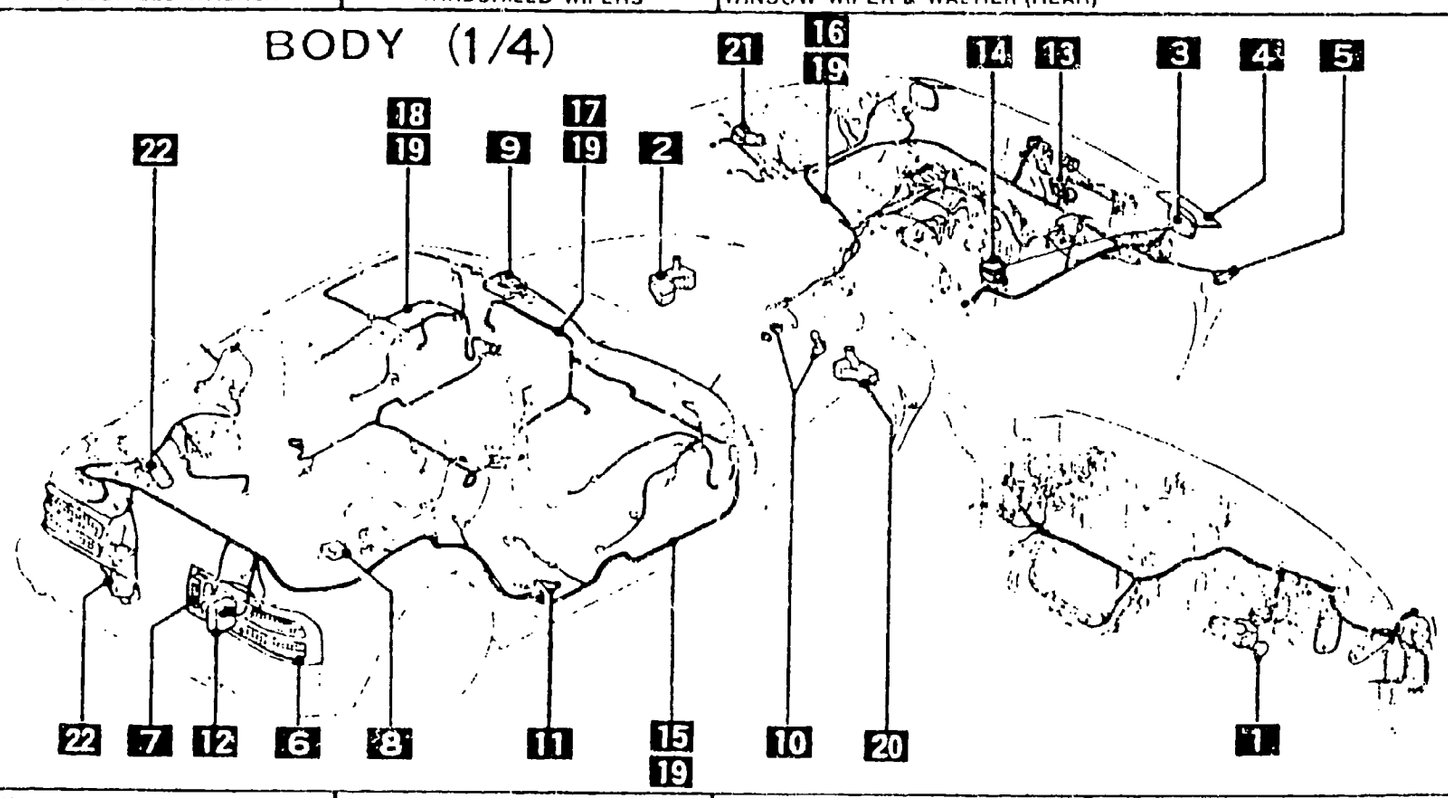

8 5125

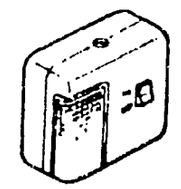

INTERIOR LAMPS

17 6702

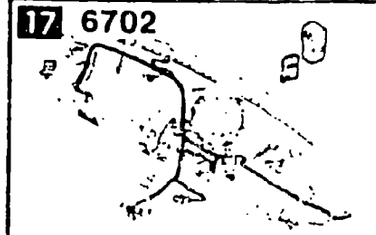

WIRING HARNESSES (DASHBOARD)

9 5130

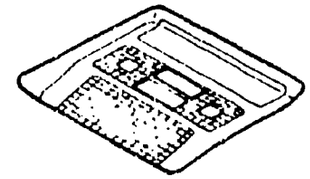

OVERHEAD CONSOLE

16 6701

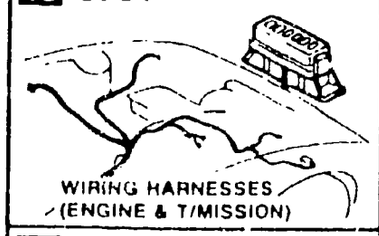

WIRING HARNESSES (ENGINE & T/MISSION)

10 6600

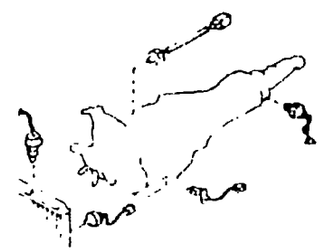

SWITCHES & RELAYS (ENGINE)

15 6700



WIRING HARNESSES (FRONT & REAR)

14 6640

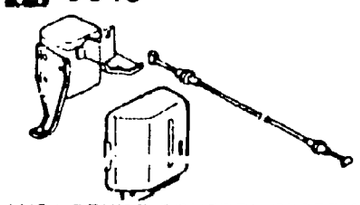

AUTO CRUISE CONTROL SYSTEM

13 6635

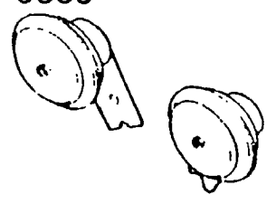

HORNS

12 6630

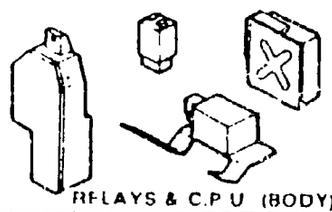

RELAYS & C.P.U. (BODY)

11 6620



DOOR, PARKING LAMP & KICKDOWN SWITCHES

As this illustration is prepared to be applicable to all models, some parts are different in specifications from the parts listed in this part Catalog.

PICTORIAL INDEX

1 5000

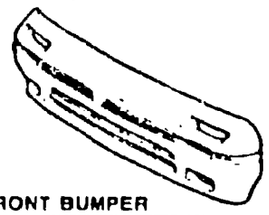

FRONT BUMPER

2 5005

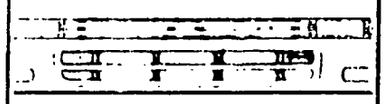

RADIATOR GRILLE

3 5010

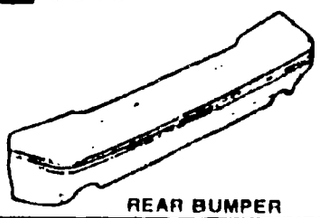

REAR BUMPER

4 5030

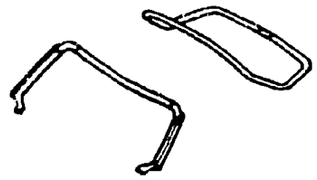

WINDOW MOULDINGS

5 5040



BODY MOULDINGS

6 5060

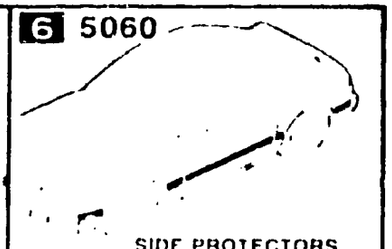

SIDE PROTECTORS

20 5840

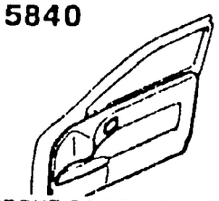

FRONT DOOR TRIMS & RELATED PARTS

21 6200 6230

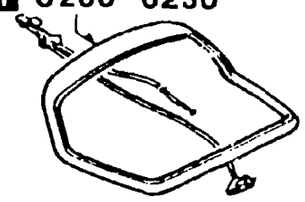

LIFT GATE MECHANISMS

22 6300

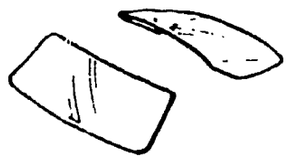

WINDOW GLASSES

23 6330

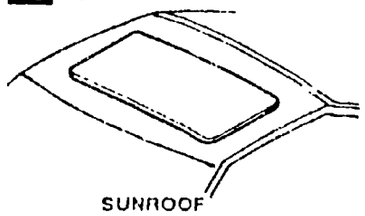

SUNROOF

24 7800

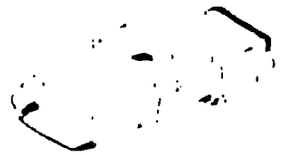

SPOILERS & RELATED PARTS

7 5170

RX-7

ORNAMENTS

19 5830

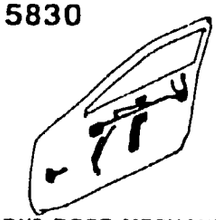

FRONT DOOR MECHANISMS

BODY (2/4)

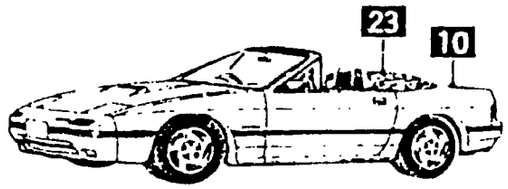

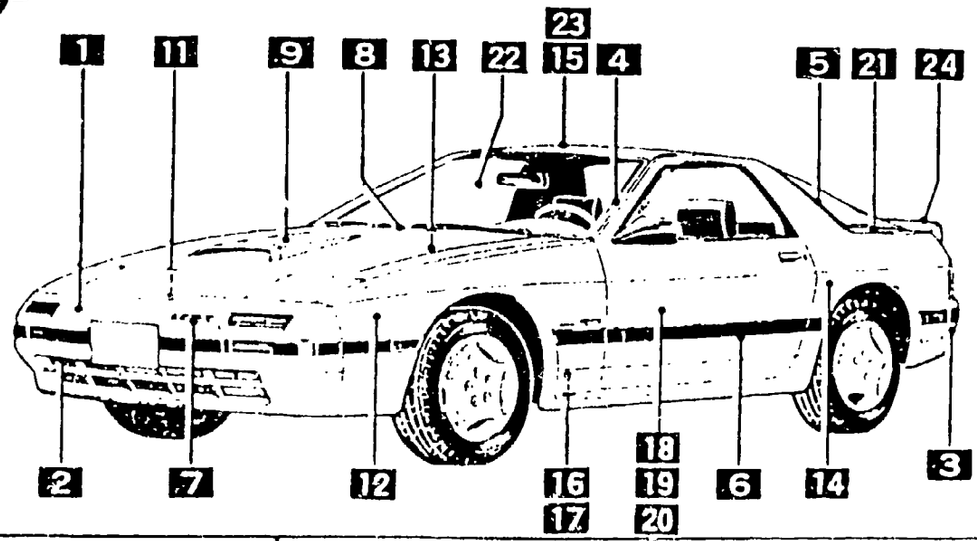

8 5180



COWL & EXTRACTOR GRILLES

18 5800

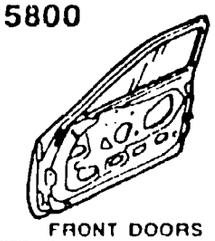

FRONT DOORS

9 5230

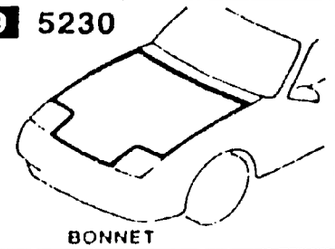

BONNET

17 5390

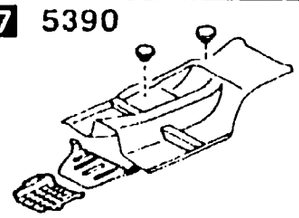

FLOOR ATTACHMENTS

10 5260



TRUNK LID

16 5370



BODY PANELS (FLOOR)

15 5360

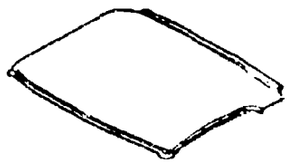

BODY PANELS (ROOF)

14 5340

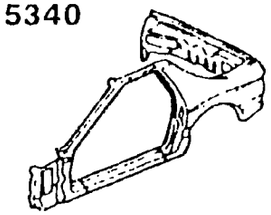

BODY PANELS (SIDE)

13 5330

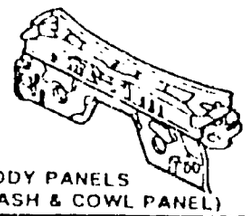

BODY PANELS (DASH & COWL PANEL)

12 5320

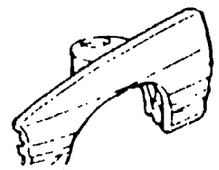

BODY PANELS (FENDER & WHEEL APRON)

11 5310

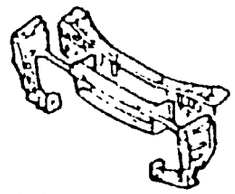

BODY PANELS (FRONT)

As this illustration is prepared to be applicable to all models, some parts are different in specifications from the parts listed in this Parts Catalog.

PICTORIAL INDEX

1 5500

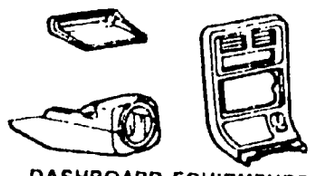

DASHBOARD EQUIPMENTS

2 5520

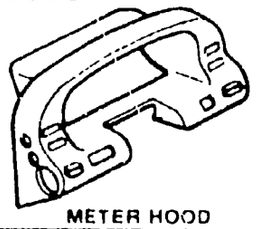

METER HOOD

3 5530

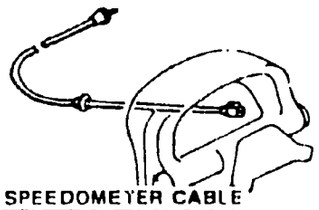

SPEEDOMETER CABLE

4 5540

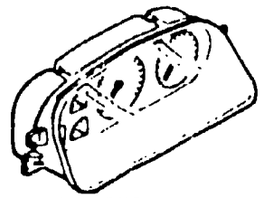

METERS

5 5560

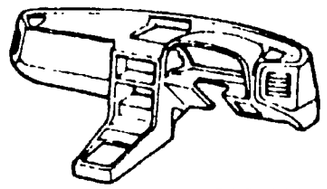

DASHBOARD & RELATED PARTS

6 5570

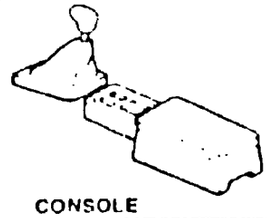

CONSOLE

BODY (3/4)

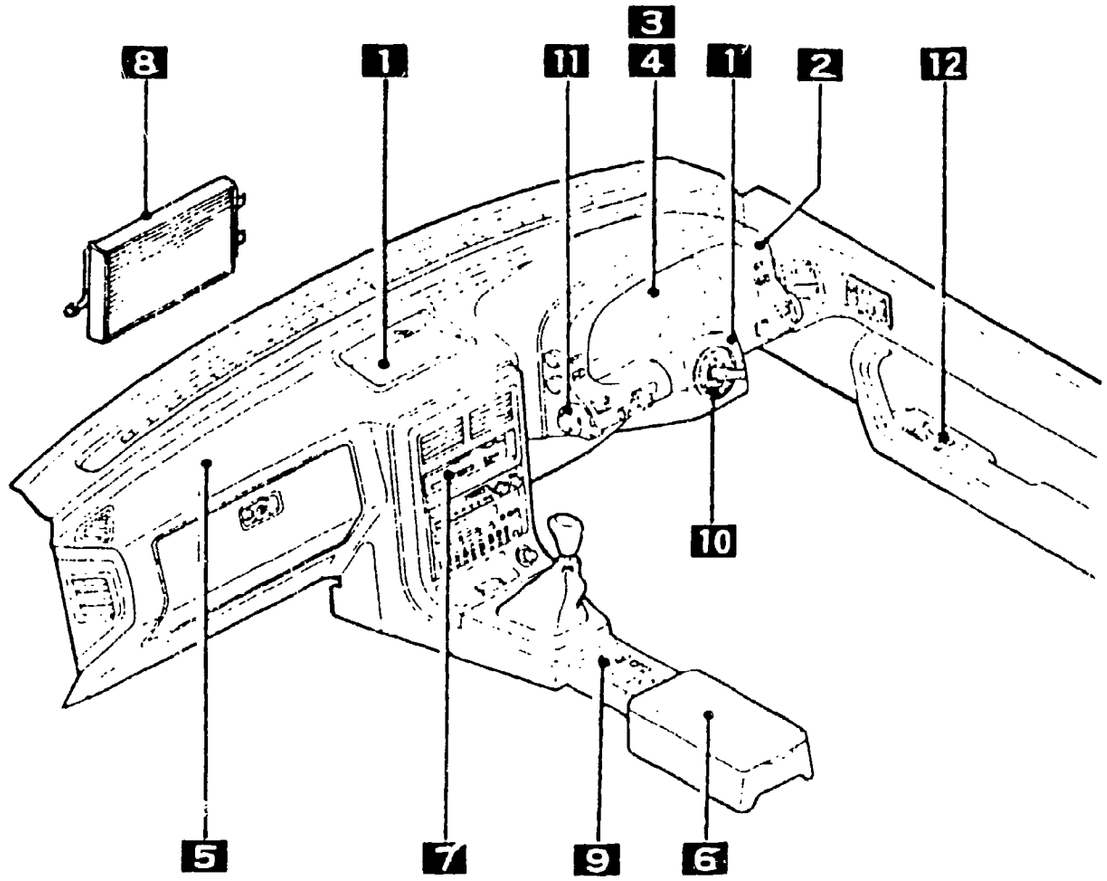

7 6100

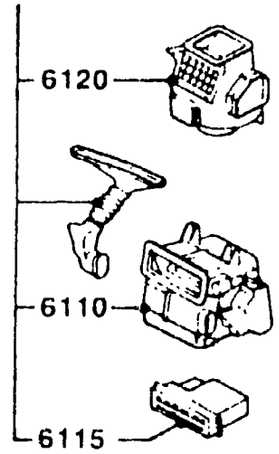

HEATER

8 6130

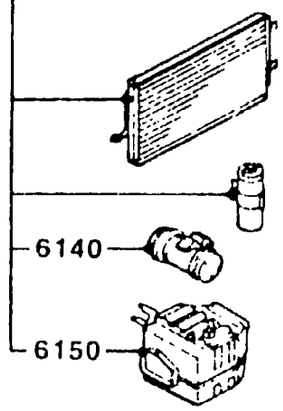

AIR CONDITIONER

12 6615

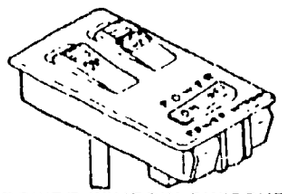

POWER WINDOW SWITCHES

11 6612

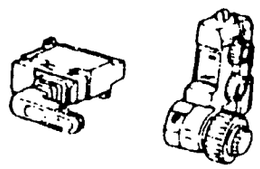

CLUSTER SWITCH

10 6611

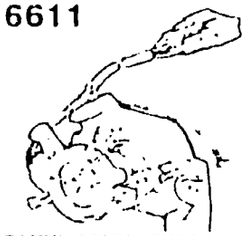

COMBINATION SWITCH

9 6610

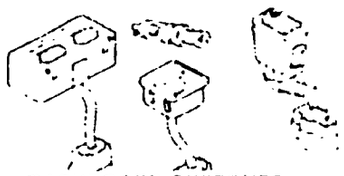

DASHBOARD SWITCHES (MANUAL OPERATING)

As this illustration is prepared to be applicable to all models, some parts are different
* specification from the parts listed in this parts catalog

PICTORIAL INDEX

1 5580

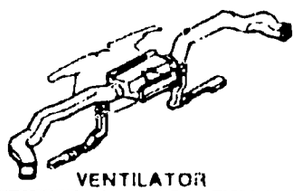

VENTILATOR

2 5700



FRONT SEATS

3 5750

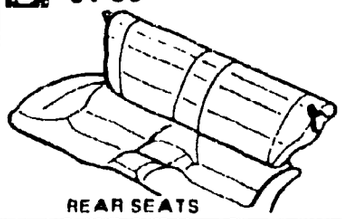

REAR SEATS

4 5790

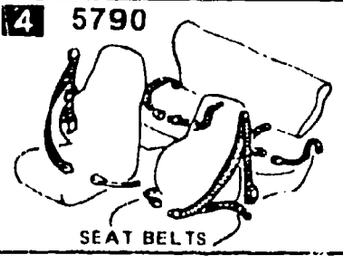

SEAT BELTS

5 6680

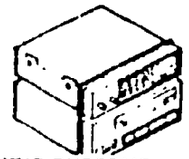

AUDIO SYSTEMS (RADIO & TAPE DECK)

6 6682

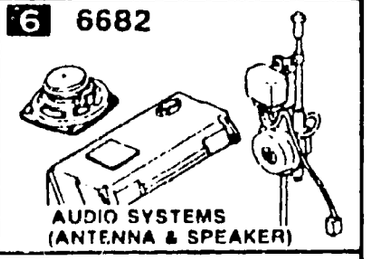

AUDIO SYSTEMS (ANTENNA & SPEAKER)

BODY (4/4)

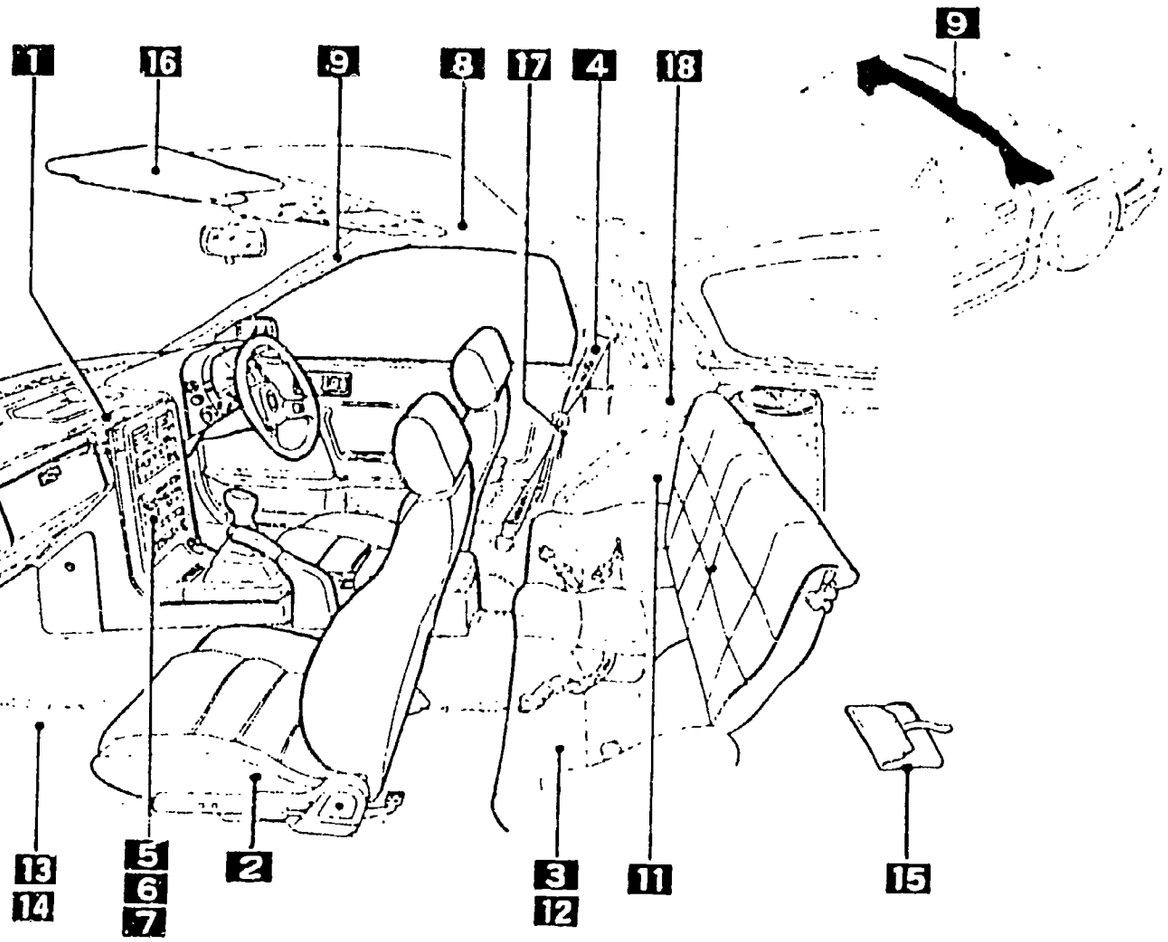

7 6684

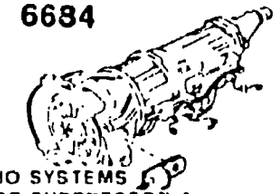

AUDIO SYSTEMS (NOISE SUPPRESSOR & EARTH CORD)

8 6800



CEILING TRIMS

18 7250

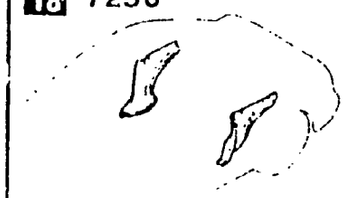

REAR WINDOW GLASSES & TRIMS

9 6820



PILLAR TRIMS

17 6930

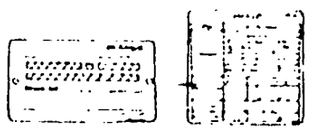

CAUTION PLATES & LABELS

10 6810

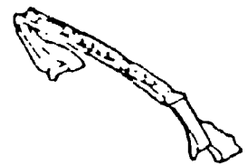

ROLLBAR

16 6900

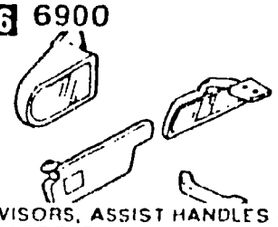

VISORS, ASSIST HANDLES & MIRRORS

15 6870



SERVICE TOOLS

14 6865

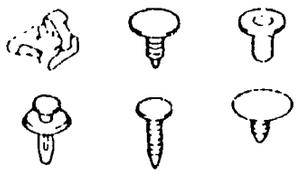

TRIM CLIPS & FASTENERS

13 6860

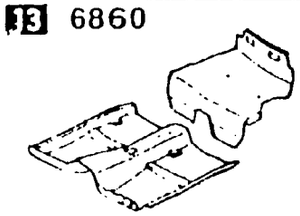

FLOOR MATS & PADS

12 6845

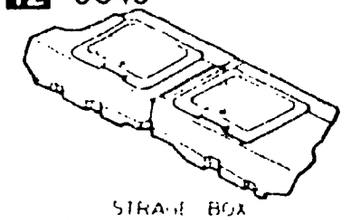

STRAGE BOX

11 6840



TRIMS & SCUFF PLATES

As this illustration is prepared for the application to all models, some parts are different or specifications from the parts listed in this parts catalog.

MODEL IDENTIFICATION

MDL NO.	ENG*		T/M		BODY		ROOF		SUSP		DIFF		BRK		SUSP		SEAT		PERIOD		YEAR			TRIM LEVEL								VIN (CHASSIS #)	COMPLETE ASSEMBLY UNIT		
	W/O TURBO	W/ TURBO	5 SPEED	AUTO	COUPE	CONV	NORM ROOF	SUNROOF	W/O AAS	W/ AAS	NORM	LIM SLIP	W/O ABS	W/ ABS	NORM	HARD	2 SEATER	2 + 2	FROM	TO	1986	1987	1988	BASE	LX PKG	SE	SPORT	GTU	GXL	TURBO	CONV	10TH ANNED		PART NUMBER		
																																	ENGINE	T/MISSION	CABIN
FB01	X		X		X		X		X		X		X		X		X		8/85	12/88	X	X	X	X		X							FC33*-100001-	N326-02-000	M582-03-000	FB01-07-000
FB02	X			X	X		X		X		X		X		X		X		8/85	12/88	X	X	X	X		X							FC33*-100001-	N327-02-000	BU17-19-090F	FB02-07-000
FB03	X		X		X			X	X		X		X		X		X		8/85	12/88	X	X	X		X	X							FC33*-100001-	N326-02-000	M582-03-000	FB03-07-000
FB04	X			X	X			X	X		X		X		X		X		8/85	12/88	X	X	X		X	X							FC33*-100001-	N327-02-000	BU17-19-090F	FB04-07-000
FB07	X		X		X			X		X		X	X			X	X		8/85	12/88	X	X	X						X				FC33*-100001-	N326-02-000	M582-03-000	FB07-07-000
FB08	X			X	X			X		X		X	X			X	X		8/85	12/88	X	X	X						X				FC33*-100001-	N327-02-000	BU17-19-090F	FB08-07-000
FB11	X		X		X			X		X		X	X			X		X	8/85	12/88	X	X	X						X				FC33*-100001-	N326-02-000	M582-03-000	FB07-07-000
FB12	X			X	X			X		X		X	X			X		X	8/85	12/88	X	X	X						X				FC33*-100001-	N327-02-000	BU17-19-090F	FB08-07-000
FB39	X		X		X		X		X		X		X		X			X	8/85	12/88	X	X	X	X		X							FC33*-100001-	N326-02-000	M582-03-000	FB01-07-000
FB40	X			X	X		X		X		X		X		X			X	8/85	12/88	X	X	X	X		X							FC33*-100001-	N327-02-000	BU17-19-090F	FB02-07-000
FB41	X		X		X			X	X		X		X		X			X	8/85	12/88	X	X	X		X	X							FC33*-100001-	N326-02-000	M582-03-000	FB03-07-000
FB42	X			X	X			X	X		X		X		X			X	8/85	12/88	X	X	X		X	X							FC33*-100001-	N327-02-000	BU17-19-090F	FB04-07-000
FB43	X		X		X		X		X		X		X			X	X		8/85	12/88	X	X	X				X	X					FC33 -100001-	N326-02-000	M582-03-000	FB01-07-000
FB47		X	X		X			X	X			X	X			X	X		2/86	12/88		X	X						X				FC33*-500001-	N332-02-000	R526-03-000	FB46-07-000
FB69	X		X		X			X	X		X		X			X	X		11/85	12/88	X	X	X				X	X					FC33*-100001-	N326-02-000	M582-03-000	FB03-07-000
FB55	X		X		X			X		X		X		X		X	X		6/86	12/88		X	X						X				FC33*-500001-	N326-02-000	M582-03-000	FB55-07-000
FB56	X			X	X			X		X		X		X		X	X		6/86	12/88		X	X						X				FC33*-500001-	N327-02-000	BU17-19-090F	FB56-07-000
FB57	X		X		X			X		X		X		X		X		X	6/86	12/88		X	X						X				FC33*-500001-	N326-02-000	M582-03-000	FB55-07-000

* 13B ENGINE.

MODEL IDENTIFICATION

MODEL NO.	ENG*		T/M		BODY		ROOF		SUSP		DIFF		BRK		SUSP		SEAT		PERIOD		YEAR			TRIM LEVEL									VIN (CHASSIS #)	COMPLETE ASSEMBLY UNIT		
	W/O TURBO	W/ TURBO	5 SPEED	AUTO	COUPE	CONV	NORM ROOF	SUNROOF	W/O AAS	W/ AAS	NORM	LIM SLIP	W/O ABS	W/ ABS	NORM	HARD	2 SEATER	2+2	FROM	TO	1986	1987	1988	BASE	LX PKG	SE	SPORT	GTU	GXL	TURBO	CONV	10TH ANNED		PART NUMBER		
																																		ENGINE	T/MISSION	CABIN
FB58	X			X	X			X		X		X		X		X		X	6/86	12/88		X	X					X					FC33*-500001-	N327-02-000	BU17-19-090F	FB56-07-000
FB61		X	X		X			X	X			X		X		X	X		6/86	12/88		X	X						X				FC33*-500001-	N332-02-000	R526-03-000	FB61-07-000
FB77	X		X		X		X		X			X	X			X	X		7/87	12/88			X				X	X					FC33*-600001-	N326-02-000	M582-03-000	FB01-07-000
FB78	X		X		X			X	X		X		X		X		X		7/87	12/88			X				X	X					FC33*-600001-	N326-02-000	M582-03-000	FB03-07-000
FB68	X		X			X			X		X		X		X		X		7/87	12/88			X							X			FC351-100001-	N338-02-000	M50N-03-000	FB67-07-000
FB79		X	X					X	X			X	X			X	X		2/88	12/88			X									X	FC33*-500001-	N332-02-000	R526-03-000	FB79-07-000

* 13B ENGINE

MODEL IDENTIFICATION

COUPE

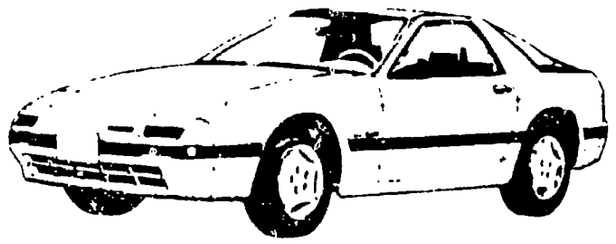

CONVERTIBLE

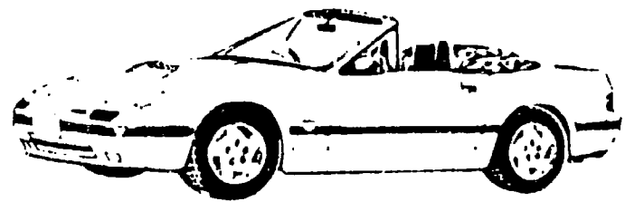

COMBINATION LIST OF BODY PAINTS AND INTERIOR COLORS

BODY PAINT		INTERIOR COLOR CODE						
NAME	CODE	COUPE				CONV.		EFFECTIVE DATE
ARCTIC SILVER METALLIC	J5		FD5	FD6		FD5	FD6	
TORONADE SILVER METALLIC	K8	FD2	FD5					
BRILLIANT BLACK	PZ	FD2	FD5			FD5		860402·
SUNRISE RED	RH	FD2	FD5			FD5		
CRYSTAL WHITE	UC				FD7			880215·
NOBLE WHITE	WY			FD6			FD6	
SATIN GOLD METALLIC	1A	FD2						
CLARET MICA	2H		FD5					870701·
SAPPHIRE BLUE METALLIC	5A		FD5	FD6			FD6	
PURE RED	NP		FD5					860402·
DOVER WHITE	WU	FD2	FD5	FD6				860402·
ROYAL MAROON METALLIC	3A	FD2	FD5					861225·

INTERIOR COLOR CODES

FD2 = RED
FD5 = GRAY
FD6 = BLUE
FD7 = BLACK

VIN BREAKDOWN

860402 FC33* -140427
861225 FC33* -528438
870701 FC33* -[illegible]

VEHICLE IDENTIFICATION SYSTEM FOR RX-7

SERIES (1986～1988)

VIN (= Vehicle Identification Number) for RX-7 series (1986 ~ 1988 Year Model) consists of WMI (= World Manufacturer Identifier), VDS (= Vehicle Description Section) and VIS (= Vehicle Identification Section). VDS consisting of six alphanumeric characters de notes the "MODEL SERIES". VIS consisting of eight alphanumeric characters de notes the serial unit number of vehicle and is sequentially numbered within each VDS.

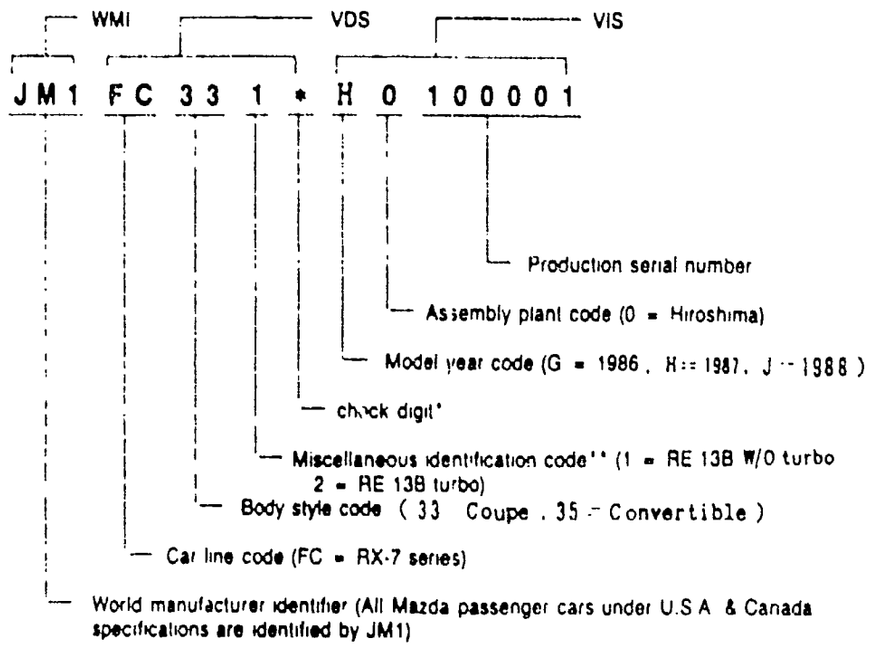

* Check digit is included as a VIN security feature to permit law enforcement verification of the authenticity of a suspected illegal VIN plate. This single digit number is determined, based upon a complex mathematical formula which is applied to each vehicle's VIN number.

** Miscellaneous Identification Code identifies major components such as engine, brake system, cab type, etc

LOCATION OF VIN PLATE

The plate is attached to the top ledge of the dash panel under the bonnet (engine hood), refer to the illustration shown right.

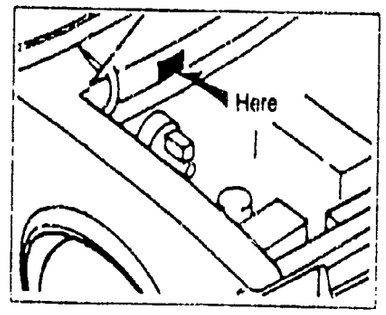

[NOTE]

If the VIN (chassis) reference number in the PCM (Parts catalog microfiche) appeared as.

FC33 *-100001

...the vehicle's VIN would be e.g. FC33111K0100001.

INSTRUCTIONS

HOW TO LOCATE PARTS

There are four approaches to locate parts as follows.

1. **PICTORIAL INDEX**
   (Picture → Section Number)
2. **SECTION NUMBER INDEX**
   (Section Name → Section Number)
3. **PART NUMBER INDEX**
   (Part Number → Section Number)
4. **ALPHABETICAL INDEX**
   (Part Name → Section Number)

Open the catalog to the illustration page indicating the referred section number at the upper left corner of the page

Find the D-code indicated for the desired part in the illustration

All your necessary information on the desired part is found at the referred D-code that is located within the related text (s) following the illustration

IMPORTANT

If you are not sure which parts catalog compiled to cover the model you are researching, refer to **MODEL IDENTIFICATION** and/or **VEHICLE IDENTIFICATION SYSTEM** located at the very front part of the parts catalog

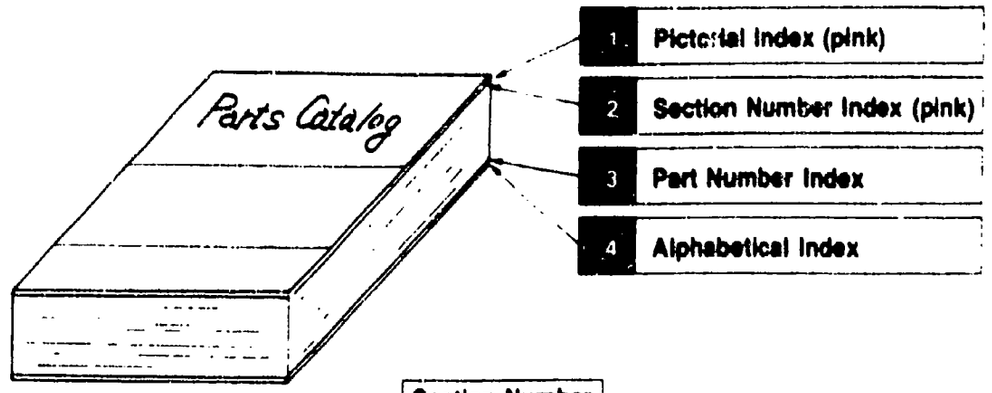

Section Number

The illustration and related text pages are compiled in numerical sequence by section number through the parts catalog
However, there is one exception : the section number, "0900 key sets" is always located in the first part of Body group

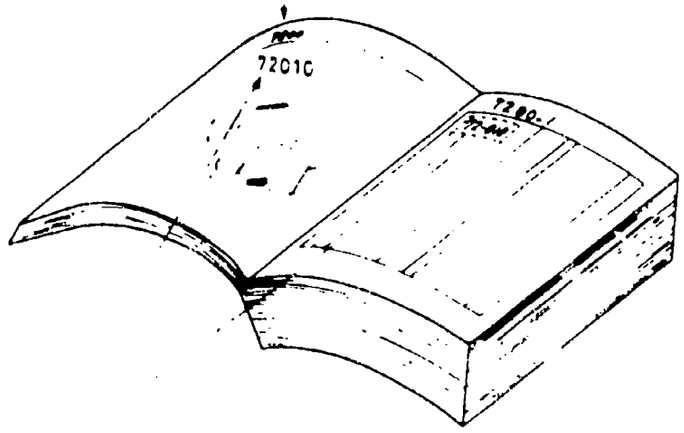

D-code

In the text, the D-codes and the related information are listed in the alphabetical and numerical sequence by D-code within each section number

HOW TO INTERPRET THE ILLUSTRATION

In the example shown below, each item is interpreted as follows

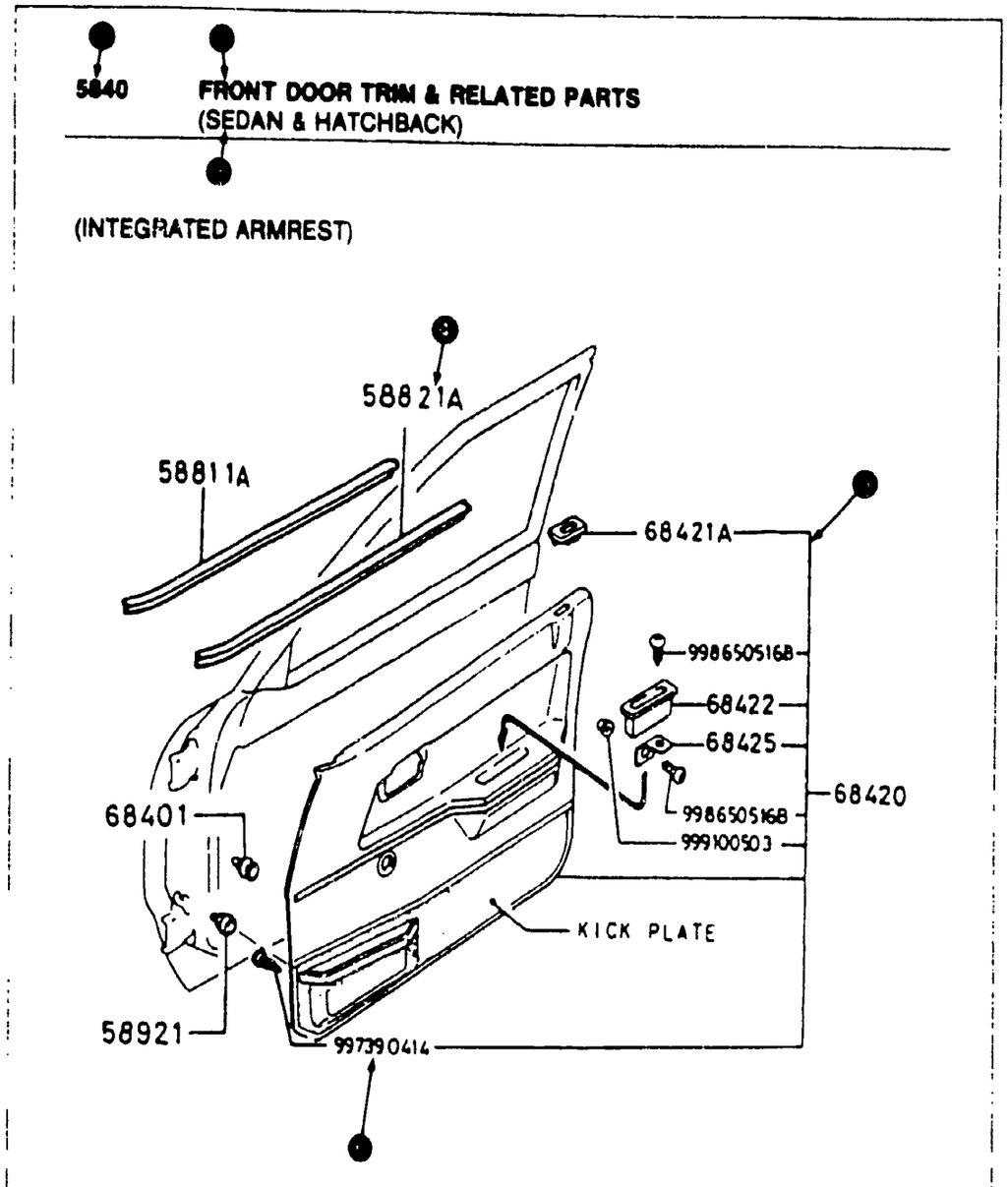

1 SECTION NUMBER
Each illustration is identified by Section Number which indicates the group of parts classified by function.

2 SECTION NAME

3 SECTION'S APPLICATION
The section's application is indicated in parentheses ( ) below the section name when the affected illustration/text is applicable to specific model, certain period of the production, etc.

4 D-CODE (KEY NUMBER)
The D-code consisting of five or six digits serves as a "KEY NUMBER" to co-ordinate a drawing with its detail information in the text.

5 RELATIONSHIP BETWEEN ASSEMBLY AND ITS COMPONENTS
The relationship between an Assembly and its Components is illustrated only by drawing.
The example shown left denotes that D-code 68420 includes D-codes, 68421A, 68422 and 68425 and standard part numbers, 998650516B, 999100503 and 997390414.

6 STANDARD PART NUMBER
Nine or ten-digit number which appears in the illustration is standard part number.
The standard part number indicated in the illustration instead of D-code does not appear in the related text.

HOW TO INTERPRET THE TEXT

In the example shown below, each item is interpreted as follows.

5840-2 FRONT DOOR TRIM & RELATED PARTS (SEDAN & HATCHBACK)

PART NO	QT	MODEL/RESTRICTION	MODEL/RESTRICTION	MODEL/RESTRICTION	FROM-TO
50-921		FASTENER	AGRAFE, GARNITURE	FIJADOR DECORACION	
G030-68-401	22	CE > SDN	MOT CONV > BRLN	MG > SDN	-3315
C (G030-68-401A)		CE > HB	MOT CONV > A/HYO AR	MG > DPT	
G030-68-401A	22	CE > SDN	MOT CONV > BRLN	MG > SDN	3315-
		CE > HB	MOT CONV > A/HYO AR	MG > DPT	
68-420		TRIM(R) DOOR	GARNITURE (D). PORTE	MOLDURA (DER). PUERTA	
GB06-68-420B	1	(INTEGRATED ARMREST)	(APPUI-BRAS INTEGRE)	(DESCANSABRAZO INTEGRADO)	-2B01
		CE > SDN	MOT CONV > BRLN	MG > SDN	
		CE > HB	MOT CONV > A/HYO AR	MG > DPT	
00		BA1 BLACK	BA1 NOIR	BA1 NEGRO	-2B01
A (GB06-68-420C00)					
10		BA2 RED	BA2 ROUGE	BA2 ROJO	-2B01
A (GB06-68-420C10)					
GB06-68-420C	1	(INTEGRATED ARMREST)	(APPUI BRAS INTEGRE)	(DESCANSABRAZO INTEGRADO)	2B01-
		CE > SDN	MOT CONV > BRLN	MG > SDN	
		CE > HB	MOT CONV > A/HYO AR	MG > DPT	
00		BA1 BLACK	BA1 NOIR	BA1 NEGRO	2B01-
10		BA2 RED	BA2 ROUGE	BA2 ROJO	2B01-

2B01 GC22?-503089
GC241-501129

3315 GC221-515671
GC241-504548

G030-68-401 C
G030-68-401A 01
9928-10-500 02

1 SECTION NUMBER

2 TEXT SEQUENCE NUMBER
The number following a hyphen denotes the text sequence number within each section number.

3 SECTION NAME

4 SECTION'S APPLICATION

5 D-CODE
In the text, D-codes and the related information are listed in the alphabetic and numeric sequence by D-code within each section number.

6 PART NAME
Part name is described for each D-code in one through three languages out of four languages such as English, French, Spanish and German.
The indicated languages vary, depending upon the market which the parts catalog is applicable to.

7 PART NUMBER
Under one D-code, if there are more than one part number due to the part change involved, the part numbers are listed in the sequence of the part production timing. the early used part number is shown first and the later one follows it

8 INTERCHANGEABILITY CODE
One-or two-digit alphabet appearing in the extrem left hand side of the text is an interchangeability code
This code indicates the nature of interchangeability between the two part numbers shown in the right with parentheses and above

The following interchangeability codes have been currently used in the parts catalog

Code		Definition
A	One Way	A new part can be used in place of the former part, but the former part cannot be used in place of the new part
A*	Both Way	A new part and the former part are fully interchangeable
C	Plus	A new part requires additional parts, to be used in place of the former part
CG	Plus	A new part requires additional part(s) and modification work to be used in place of the former part
G	Plus	A new part requires modification work to be used in place of the former part
S	One Way Backward	The former part can be used in place of a new part, but the new part cannot be used in place of the former part

⑧ SUPERSEDING PART NUMBER
When a part is changed and new part is interchangeable with the former part, the new part number as the superseding part is shown in parentheses right under the former (superseded) part number.

⑨ NEW PART NUMBER IDENTIFICATION
An asterisk (*) denotes that the indicated part number has been added since the last microfiche edition (not the last paper edition).
The microfiche parts catalog is revised more frequently than the paper one.

⑩ QUANTITY
This denotes the quantity of the part used under the indicated D-code within each section number.

⑪ MODEL APPLICATION
Model application for each part number is described in one through three languages out of four languages such as English, French, Spanish and German.

⑫ PART USAGE RESTRICTION
Part usage restriction is shown for factory installed option parts to indicate under what condition the part is installed.
This information is also described in one through three languages

⑬ COLOR CODE OF PART NUMBER
For color keyed parts, two-digit color code(s) appear(s) right under its basic part number consisting of nine or ten digits. The complete part number for color keyed parts consists of the basic part number (9 or 10 digits) and the color code (2 digits)

⑭ INTERIOR or PAINT CODE FOR VEHICLE
The applicable interior or paint code(s) for the vehicle is (are) indicated to each color code of part number.

⑮ COLOR DESCRIPTION OF PART
A color description of the part is indicated to each part's color code in one through three languages

⑰ PART CHANGE DATE
When a part is added, changed or deleted, the effective date coded in four digits is shown as follows.

Example

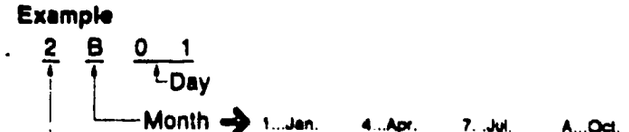

—2801 Used up to 2801
2801— Used from 2801
2801—3315. Used from 2801 to 3315

⑱ VIN NUMBER
The VIN number(s) related to the part change date is (are) shown in the footnote column, referring each date shown above

⑲ MULTIPLE SUPERSESSION
Shown as the example is a multiple supersession identified by the interchangeability codes "C" and "CG" one part can be replaced by more than one part
When the interchangeability codes "C" or "CG" appears in the text, a complete information on the multiple supersession will be shown in the footnote column of the same text

Example

G030-68-401	C	→	The left example should be interpreted as:
G030-68-401A	01		Part No. G030-68-401 can be replaced by Part Nos.
9928-10-500	02		G030-68-401A (1 pc.) and 99928-10-500 (2 pcs.).

HOW TO INTERPRET THE VIN APPLICATION

If the part change date appears as the example below:

PART NO.	QT	MODEL/RESTRICTION	MODEL/RESTRICTION	MODEL/RESTRICTION	FROM–TO
11-210 ROD, CONNECTING			BIELLE	BIELA	
E301-11-210	4	1100 1300	1100 1300	1100 1300	–3801
E301-11-210A	4	1100 1300	1100 1300	1100 1300	3801–4215
E301-11-210B	4	1100 1300	1100 1300	1100 1300	4215–

3801 BD1012 805812
BD1032 824340
4215 BD1012 816750
BD1032 830192

it should be interpreted:

① Part No. E301-11-210 is applicable to 1100 cc, from the initial production through BD1012 805911 (= 805912 minus 1) and 1300 cc, from the initial production through BD1032 824339 (= 824340 minus 1).

② Part No. E301-11-210A is applicable to 1100 cc, from BD1012 805912 through BD1012 816749 (= 816750 minus 1) and 1300 cc, from BD1032 824340 through BD1032 830191 (= 830192 minus 1).

③ Part No. E301-11-210B is applicable to 1100 cc, from and after BD1012 816750 and 1300 cc, from and after BD1032 83192.

Note:

The parts catalog often shows the catalog designation VIN instead of the actual VIN. For the correct interpretation for the catalog designation VIN, refer to explanation in "Vehicle Identification System" shown in the extreme right row of the last microfiche in the set.

HOW TO INTERPRET THE SUPERSESSION

If the supersession information appears as the example below:

	PART NO.	QT	MODEL/RESTRICTION
	58-921 FASTENER		
Interchangeability Code / Superseding Part Number	G030-68-401	22	1300 1500
	A (G030-68-401A)		Model Application for Part No. G030-68-401
	G030-68-401A	22	1300 1500
	68-420 TRIM (R) DOOR		
Color Code	GB06-68-420A	1	
	00		BA1 BLACK
Interchangeability Code / Superseding Part Number	A (GB06-68-420B00)		
	10		BA2 RED
	A (GB06-68-420B10)		
	GB06-68-420B	1	
	00		BA1 BLACK
	10		BA2 RED

it should be interpreted:

① Part No. G030-68-401A can be used in place of part No. G030-68-401.

② Part No. GB06-68-420B00 can be used in place of part No. GB06-68-420A00.

③ Part No. GB06-68-420B10 can be used in place of part No. GB06-68-420A10.

HOW TO INTERPRET THE MODEL APPLICATION

If the model application and the usage restriction appear as the example below:

Watch the information in parentheses( )!!

3210 -1 STEERING COLUMN
(SEDAN)

	PART NO.		QT	MODEL/RESTRICTION	MODEL/RESTRICTION	MODEL/RESTRICTION
	32-071	BUSH			BUSELURE	BUJE
①	B001-32-071		1			
	32-100	SHAFT, ENGY. ABSORBER			COLONE TELESCOPIQUE	EJE, AMORTIQUAD
②	BA29-32-100A		1	(W/POWER STEERING) 1300 > MT 1500 > MT	(A/DIRECTION ASSISTEE) 1300 > B. V. MANU 1500 > B. V. MANU	(C/DIRCCION DE POTENCIA) 1300 > TM 1500 > TM

it should be interpreted:

① Part No. B001-32-071 is applicable to all the Sedans covered by this particular catalog.

② Part No. BA29-32-100A is applicable to Sedan 1300 Manual Trans. and Sedan 1500 Manual Trans in case they are equipped with the power steering.

MAZDA PART NUMBERING SYSTEM

Mazda Part Numbers are generally classified into three categories:
General Service Parts & Accessories, Standard Parts and Special Tools.

Note: Mazda Part Number consists of numeric and alphabet letters. In order to avoid the confusion due to similar characters among number and alphabet, alphabet letters I and O are not used in the part number. However, these letters are rarely used in 10th digit of the part number as an exception.

MAZDA GENERAL SERVICE PARTS & MAZDA ACCESSORIES

These part numbers basically consist of nine or ten digits. The 10th digit (if applicable) identifies the engineering change of the part. The color keyed part, however, consists of twelve digits since two-digit color code are added to nine or ten-digit number to identify its color.

EXAMPLE

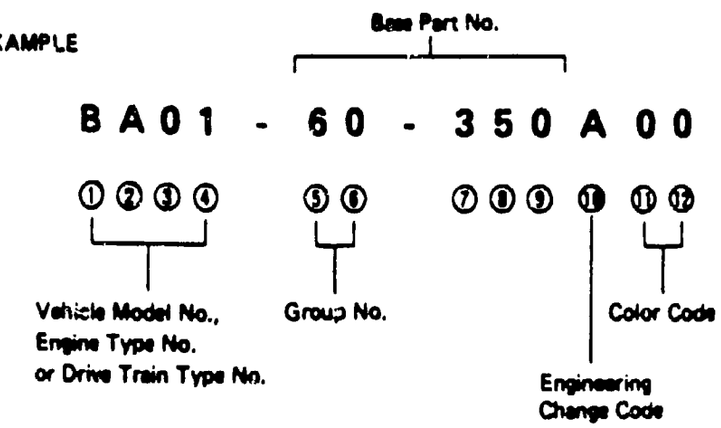

Note: In case the engineering change is not made to a part, the 10th digit of the part number is left blank even for the color coded part, e.g.,

BA01-60-350 00
↑ Blank

MAZDA STANDARD PARTS

The Parts standardized in form and dimension such as Bolts, Nuts, Washers, Hoses, Disc Wheels, etc. are called Mazda Standard Parts.

All Mazda Standard Part Numbers are identified by "9" in the first digit. The numbering structure of Standard Parts varies, depending upon the type of part.

The following is just one example of Standard Part Number.

For further details and examples, refer to the wall chart, "LIST OF STANDARD PARTS".

EXAMPLE

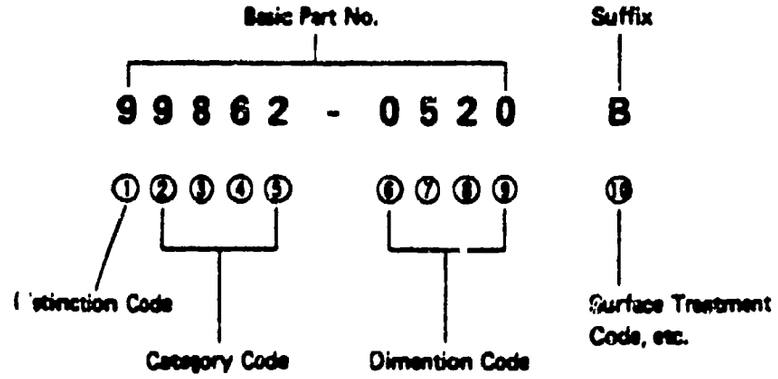

MAZDA SPECIAL TOOLS

In order to repair Mazda Vehicles, several special tools are required. These are called Mazda Special Tools. Mazda Special Tools are identified by the Part Number starting with "49".

EXAMPLE

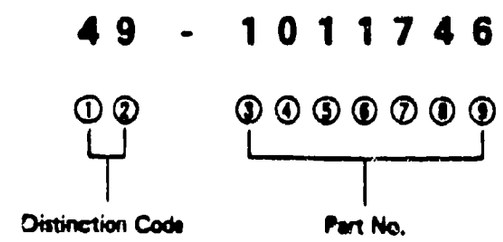

ABBREVIATION LIST

ABBREV.	MAY REPLACE
1ST	First
2ND	Second
3RD	Third
4TH	Fourth
4 SPD	Four Speed
4WS	Four Wheel Steering
4WD, 4X4	Four Wheel Drive
5TH	Fifth
5 SPD	Five Speed
A.A.	Anti Afterburn
A.A.S.	Auto Adjusting Suspension
ABS	Anti Lock Braking System
A/C	Air Conditioning
A.C.C.	Automatic Cruise Control
ACCEL.	Accelerator
A.C.V.	Air Control Valve
A.E.	Acoustical Equalizer
ALUM	Aluminum
ALL	Automatic Load Leveling
ALT.	Alternator
AMF.	Amplifier
ANT.	Antenna
APR.	April
ASSY.	Assembly
A/T	Automatic Transmission
AUG.	August
AUTO.	Automatic
BAL.	Balance
BELT.	Beltline
BFGR	B. F. Goodrich
BRDG	Bridgestone
BRG.	Bearing
BRKT.	Bracket
BRN.	Brown
BLK.	Black
BLU.	Blue
BMPR.	Bumper
B.S.V.	Bleed Solenoid Valve
BULL.	Bulletin
BW	Black Wall
CAL.	California
CASS.	Cassette
CAT.	Category
Cd	Coefficient Of Drag
CD	Compact Disk
C.G.R.	Constant Gear Ratio
CHG.	Change
CHK.	Check
CHMBR	Chamber
CHN.	Chain
CIGAR.	Cigarette
CI	Coefficient Of Lift
CLPR	Caliper
CNVTR.	Converter
COMB.	Combination
COND.	Condenser
COMP.	Compressor
CONV.	Convertible
C/P	Cab Plus
C.S.D.	Cold Start Device
CSTG.	Coasting
CTR.	Center
CTRL.	Control
CV	Constant Velocity
CVR.	Cover
CYL.	Cylinder
DASH.	Dashboard
Db	Decibels
DEC.	December
DEF.	Defroster
DIAPH	Diaphragm
DIFF.	Differential
DNLP	Dunlop
DOHC	Double Overhead Camshaft
DSL.	Diesel
DTSS	Dynamic Tracking Suspension System
DX	Deluxe
ECAT	Electronically Controlled A/T
EGI	Electronic Gas Injection
EGR	Exhaust Gas Recirculation

ABBREVIATION LIST

ABBREV.	MAY REPLACE
ELEC.	Electric
ENG.	Engine
ETR	Electronically Tuned Radio
EXC.	Except
EXH.	Exhaust
EXT.	Extension
EQ	Equalizer
FEB.	February
FED.	Federal
F.I.	Fuel Injection
FLEX	Flexible
F/LID	Fuel Lid
FRT.	Front
FRST	Firestone
FSTNR.	Fastener
G	Gram
GAS.	Gasoline
GDYR	Goodyear
GEN.	General
GOV.	Governor
GRN.	Green
GRY.	Gray
GSKT.	Gasket
H.A.C.	High Altitude Compensator
HARN.	Harness
H/B	Hatchback
HD.	Head
H/DUTY	Heavy Duty
HDWE.	Hardware
HI. ALT.	High Altitude
HSG.	House, Housing
HTR.	Heater
IC	Integrated Circuit
ID	Inside Diameter
IGN.	Ignition
ILLUM.	Illumination, Illuminated
INCL	Includes
IND	Indicator
INFO.	Information
INST.	Instrument
INN.	Inner
INT.	Interior
INTMT.	Intermittent
INJ.	Injector, Injected
I.R.S.	Independent Rear Suspension
JAN.	January
JUL.	July
JUN.	June
KG	Kilogram
KM	Kilometer
KW	Kilowatt
(L), LT	Left
L=	Length
LCD	Liquid Crystal Display
L/B	Long Bed
LH	Left Hand
LPG	Liquid Petroleum Gas
L.S.D.	Limited Slip Differential
LWR	Lower
LX	Luxury
M	Metallic
MAR.	March
MC	Mica
MCHN	Michelin
MLDG.	Moulding, Mould
MM	Millimeter
MNFLD.	Manifold
MPX	Multiplex
MSTR.	Master
M/T	Manual Transmission
MTG.	Mounting
MTR	Manually Tuned Radio
N=	Number Of Teeth
N/A	Not Available
N/B	Notchback
NO.	Number
NORM.	Normal
NOV.	November

ABBREVIATION LIST

ABBREV.	MAY REPLACE
OCT.	October
OD	Outer Diameter
O/DRIVE	Overdrive
OHC	Overhead Camshaft
OPT.	Optional
O.S.	Oversize
OUT.	Outer
PANSC	Panasonic
PARK.	Parking
PB	Parking Brake
PCV	Positive Crankcase Ventilation
PIN.	Pinion
PKG	Package
PLR	Pillar
PROD.	Production
P/S	Power Steering
P/TRIM	Pillar Trim
PTH	Phillips Truss Head
PWR.	Power
QTR.	Quarter
QTY.	Quantity
(R), RT	Right
RH	Right Hand
RAD.	Radiator
REINF.	Reinforcement
REG.	Regular
REGUL.	Regulator
REL.	Release
REM.	Remote
RET.	Return
REV.	Reverse
RR.	Rear
RWL	Raised White Letters
S/B	Short Bed
S/ROD	Shift Rod
S/S	Supercession
SDN.	Sedan
SEP.	September
SERV.	Service
SLND.	Solenoid
SOHC	Single Overhead
SPEC.	Specification
SPEEDO.	Speedometer
SPG.	Spring
SPKR.	Speaker
SPRKT.	Sprocket
SRS	Supplemental Restraint System
STAB.	Stabilizer
STD.	Standard
STRG.	Steering
S/ROOF	Sunroof
SUSP.	Suspension
S/W	Station Wagon
SW.	Switch
SYNC.	Synchronizer
T=	Thickness
TEMP.	Temperature
THERMO.	Thermostat
TMG.	Timing
T/MISSION	Transmission
TRK.	Truck
T/LID	Trunk Lid
T/S	Touring Sedan
TTL	Twin Trapezoidal Links
TURBO	Turbocharged
UP.	Upper
U.S.	Undersize
VAC.	Vacuum
V.G.R.	Variable Gear Ratio
VPV	Variable Port Valve
VNL.	Vinyl
W=	Width
W/	With
W/P	Water Pump
WGN.	Wagon
WHL.	Wheel
W/O	Without
WHT.	White
W/SHIELD	Wind Shield, Screen
	Wind Screen
WTR.	Water
W/W	White Walls

mazda

1986-88 RX-7 ACCESSORIES

AERO

0000-86-325 - Wing Spoiler
F061-V4-920 -0F - Factory Spoiler

AIR CONDITIONER
Refer to Accy. Bulletin XA-1 for Air Conditioner information.

ALARM

0000-88-1901 - Electronic Shock Sensor
Refer to Accy. Bulletin XG-6 for Alarm information.

ARM REST
Refer to Accy. Bulletin XN-1 for replacement parts.

BATTERY

0000-80-126F
Refer to Accy. Bulletin XG-4 for Battery information.

BLOCK HEATER

0000-88-6600
Refer to Accy. Bulletin XG-5 for installation information.

CAR COVER

0000-88-092A - Evolution 3 Blue
0000-88-090 -LK - Lock Kit
Refer to Accy. Bulletin XG-8 for more Car Cover information.

CARGO COVER

FB01-V1-350 -1F - Red
FB01-V1-350 -5F - Blue
FB01-V1-350 -7F - Grey

CIGARETTE LIGHTERS

B001-66-252

CRUISE CONTROL

8AF1-66-340 - Coupe
8AF2-66-340 - Convertible
Refer to Accy. Bulletin XG-7 for more Cruise Control information.

DOOR EDGE GUARDS

0000-88-3199-BK - Black Universal Type

FLOOR MATS

0000-88-7688-05 - Gray Plush Mat
0000-88-7688-11 - Wine Plush Mat
0000-88-7688-50 - Blue Plush Mat
0000-88-7688-TA - 10th Anniversary Edition Mat

FOG LIGHTS

0000-88-500A-R6 - Clear Complete Kit
Refer to Accy. Bulletin XE-4 for Fog Light parts information.

FRONT MASK

0000-88-0588 - JTU, w/o Air Dam

MUD GUARDS

F045-V3-350 -0F - Front Set
F045-V3-351 -0F - Front Left
F045-V3-352 -0F - Front Right
F045-V3-360 -0F - Rear Set
F045-V3-361 -0F - Rear Left
F045-V3-362 -0F - Rear Right

PAINT
Refer to Accy. Bulletin XE-2 for Touch-Up Paint information.

RACKS

0000-88-1077 - Piper Ski Rack
0000-88-1067 - Sport Rack
0000-88-1200 - Ski Attachment
0000-88-1300 - Bike Attachment
0000-88-1400 - Sail/Surf Attachment
0000-88-1500 - Luggage Attachment

STEREO EQUIPMENT
Refer to Accy. Bulletins XS-1, XS-2, and XS-3 for Audio information.

SUNROOF WIND DEFLECTOR

0000-86-3007

TIRES
Refer to Accy. Bulletins XE-1 for Tire information.

WHEEL LOCKS

0000-88-120C - Wheel Lock Set
0000-88-120C-BP - Lock Blister Pack
Refer to Accy. Bulletin XE-5 for more Wheel Lock information.

SECTION INDEX -- BODY

STARTING LOCATION	SECT. NO.	SECTION NAME
2 - C 3	0900A	KEY SETS
2 - E 3	5000	FRONT BUMPER
2 - F 3	5005	RADIATOR GRILLE
2 - G 3	5010A	REAR BUMPER
2 - H 3	5030A	WINDOW MOULDINGS
2 - I 3	5040A	BODY MOULDINGS
2 - J 3	5060A	SIDE PROTECTORS
2 - K 3	5100	HEAD LAMPS
2 - L 3	5103	HEAD LAMP RETRACTORS
2 - M 3	5105	FRONT COMBINATION LAMPS
2 - C 4	5110A	REAR COMBINATION LAMPS
2 - E 4	5120	LICENSE LAMPS
2 - F 4	5125	INTERIOR LAMPS
2 - G 4	5130	OVERHEAD CONSOLE (COUPE)
2 - H 4	5170	ORNAMENTS
2 - I 4	5180	COWL & EXTRACTOR GILLES
2 - K 4	5230	HOOD
2 - L 4	5260	TRUNK LID (CONVERTIBLE)
2 - M 4	5310	BODY PANELS (FRONT) (COUPE)
2 - N 4	5310A	BODY PANELS (FRONT) (CONVERTIBLE)
2 - C 5	5320	BODY PANELS (FENDER & WHEEL APRON) (COUPE)
2 - D 5	5320B	BODY PANELS (FENDER & WHEEL APRON) (CONVERTIBLE)
2 - E 5	5330	BODY PANELS (DASH & COWL PANEL)
2 - F 5	5340A	BODY PANELS (SIDE) (COUPE)
2 - H 5	5340AA	BODY PANELS (SIDE) (CONVERTIBLE)
2 - K 5	5360A	BODY PANELS (ROOF) (COUPE)
2 - L 5	5370	BODY PANELS (FLOOR) (COUPE)
2 - M 5	5370A	BODY PANELS (FLOOR) (CONVERTIBLE)
2 - C 6	5390	FLOOR ATTACHMENTS (COUPE)
2 - E 6	5390A	FLOOR ATTACHMENTS (CONVERTIBLE)
2 - G 6	5500	DASHBOARD EQUIPMENTS (COUPE) (W/O ANTI-LOCK BRAKE SYSTEM)
2 - I 6	5500A	DASHBOARD EQUIPMENTS (COUPE) (ANTI-LOCK BRAKE SYSTEM)
2 - J 6	5500B	DASHBOARD EQUIPMENTS (CONVERTIBLE)
2 - K 6	5520	METER HOOD
2 - L 6	5530	SPEEDOMETER CABLE
2 - M 6	5540	METER COMPONENTS (COUPE) (W/O ANTI-LOCK BRAKE SYSTEM)
2 - C 7	5540A	METER COMPONENTS (COUPE) (ANTI-LOCK BRAKE SYSTEM)
2 - E 7	5540B	METER COMPONENTS (CONVERTIBLE)
2 - F 7	5560	DASHBOARD & RELATED PARTS
2 - I 7	5570	CONSOLE
2 - K 7	5580	VENTILATOR
2 - C 8	5700A	FRONT SEATS (COUPE)
2 - C 9	5700AA	FRONT SEATS (COUPE) (LEATHER)
2 - C10	5700AB	FRONT SEATS (CONVERTIBLE) (CLOTH)
2 - F10	5700AC	FRONT SEATS (CONVERTIBLE) (LEATHER)
2 - J10	5750A	REAR SEATS (CLOTH)
2 - C11	5750AA	REAR SEATS (LEATHER)
2 - H11	5790A	SEAT BELTS
2 - J11	5800A	FRONT DOORS (COUPE)
2 - K11	5800AA	FRONT DOORS (CONVERTIBLE)
2 - C12	5830A	FRONT DOOR MECHANISMS (COUPE)
2 - H12	5830AA	FRONT DOOR MECHANISMS (CONVERTIBLE)
2 - C13	5840A	FRONT DOOR TRIMS & RELATED PARTS (COUPE)
2 - K13	5840AB	FRONT DOOR TRIMS & RELATED PARTS (CONVERTIBLE)
2 - N13	6100	HEATER
2 - C14	6110	HEATER UNIT COMPONENTS
2 - D14	6115	HEATER CONTROLS COMPONENTS
2 - E14	6120	HEATER BLOWER COMPONENTS
2 - F14	6130	AIR CONDITIONER (W/O AIR CONDITIONER)
2 - G14	6132A	CONDENSER PACKAGE
2 - I14	6142A	COMPRESSOR MOUNTING KIT, COMPRESSOR CLUTCH ASSEMBLY & REPAIR PARTS
2 - J14	6152A	EVAPORATOR PACKAGE
2 - K14	6200	LIFT GATE
2 - L14	6230	LIFT GATE MECHANISMS (COUPE)
2 - N14	6300A	WINDOW GLASSES
2 - C15	6330	SUNROOF (COUPE)
2 - E15	6330A	SOFT TOP (CONVERTIBLE)
2 - G15	6600B	SWITCHES & RELAYS (ENGINE) (W/O TURBO)
2 - J15	6600BA	SWITCHES & RELAYS (ENGINE) (TURBO)
2 - M15	6610	DASHBOARD SWITCHES (MANUAL OPERATING)
2 - N15	6611	COMBINATION SWITCH
2 - C16	6612	CLUSTER SWITCH
2 - D16	6615	POWER WINDOW SWITCHES
2 - E16	6620	DOOR SWITCH
2 - F16	6630	RELAYS & CPU (BODY)
2 - G16	6635	HORNS
2 - H16	6640	AUTO CRUISE CONTROL SYSTEM
2 - I16	6680	AUDIO SYSTEMS (RADIO & TAPE DECK)

0900A-1 KEY SETS

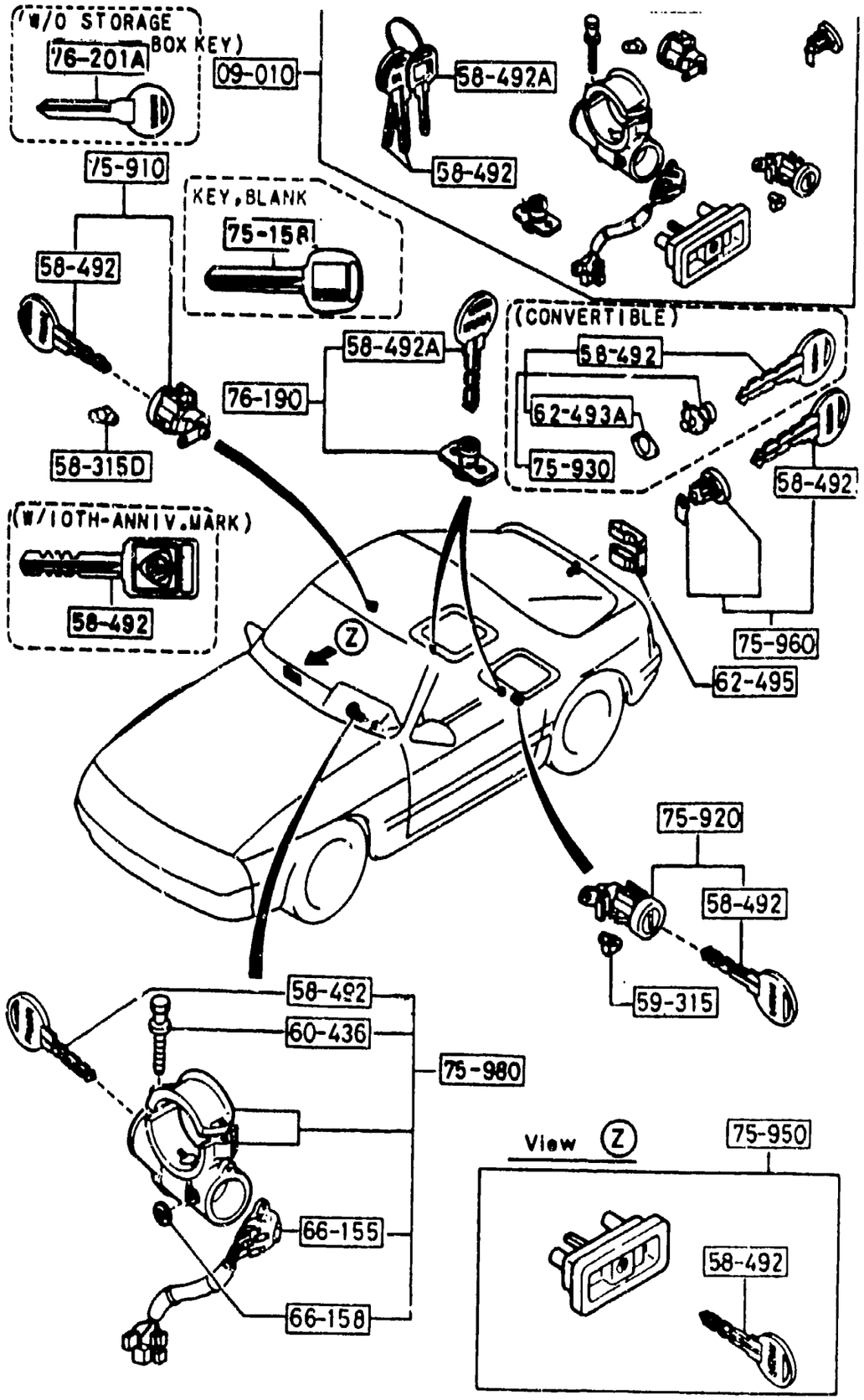

ITEM NO.	D-CODE	DESCRIPTION	PART NO.	QTY	MODEL/DESCRIPTION	REMARKS
	09 010	KEY SET	FB67-09-010B	1		
		DARK GRAY	07			
		BLUE	48			
			FB68-09-010B	1	CONV.	
		DARK GRAY	07			
		BLUE	48			
			FR01-09-010C	1	COUPE W/O STORAGE BOX	
		DARK GRAY	07			
		RED	10			
		BLUE	48			
			FB02-09-010C	1	COUPE W/ STORAGE BOX	
		DARK GRAY	07			
		RED	10			
		BLUE	48			
	58 315D	CLIP (R)	G030-58-315	1	COUPE	
				2	CONV.	
	58 492	KEY, PRIMARY	HA43-76-201A	2	KEY NO. REQUIRED	
	58 492A	KEY, SECONDARY	HA43-76-202	1	KEY NO. REQUIRED	
		REFER TO PARTS BULL. NO. A-2-4 FOR MORE KEY INFO.				
	59 315	CLIP	G030-59-315	1		
	60 436	BOLT, SET	H043-66-154	2		
	62 493A	GASKET, KEY CYLINDER	FB67-56-904	1	CONV.	
	62 495	RETAINER, LOCK CYLINDER	FB01-62-495	1	COUPE	
	66 155	SWITCH, IGNITION	FB01-66-151	1		
	66 158	NUT, SPEED-STEERING LOCK	BC46-66-158	2		
	75 158	KEY, BLANK	HA43-76-202	1		
	75 910	KEY SUB SET (R), DOOR	FR01-76-210B	1		
	75 920	KEY SUB SET (L), DOOR	FB01-76-220B	1		
	75 930	KEY SUB SET, TRUNK	FB66-76-230	1	CONV.	
	75 950	KEY SUB SET, GLOVE	FB01-76-250	1		-7701
		DARK GRAY	07			
		RED	10			
		BLUE	48			
			FB02-76-250	1		7701-
		DARK GRAY	07			
		RED	10			
		BLUE	48			
	75 960	KEY SUB SET, LIFT GATE	FB01-76-260	1		
	75 980	KEY SUB SET, IGNITION SWITCH	FB01-76-290	1		

7701 FC33* -550169

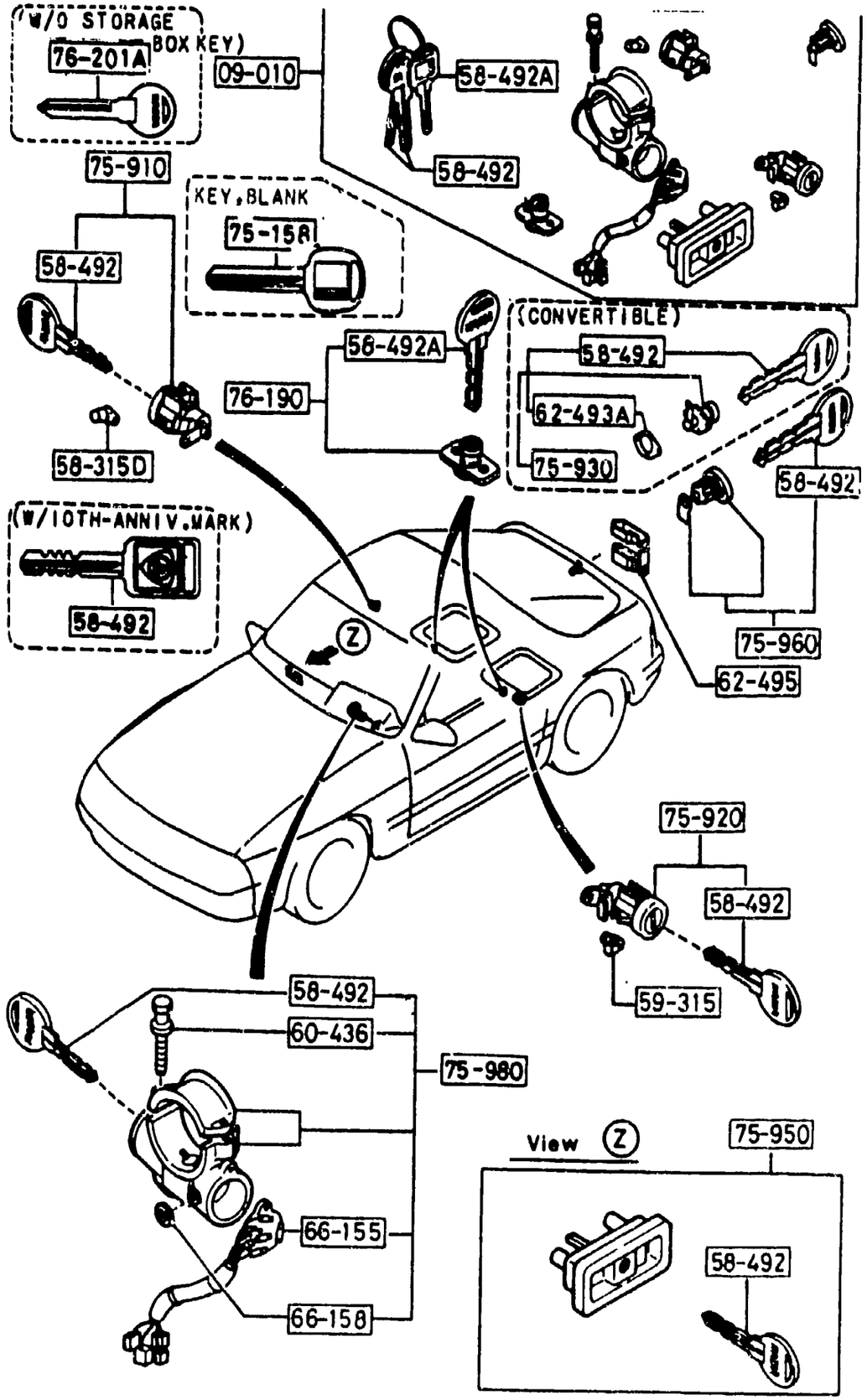

ITEM NO.	D-CODE	DESCRIPTION	PART NO.	QTY	MODEL/DESCRIPTION	REMARKS
	76 190	KEY SUB SET, STORAGE	FB02-76-190	1	W/ STORAGE BOX	
	76 202	KEY, BLANK-SECONDARY	HA43-76-201A	1		6901-

6901 FC33* -512255

5000-1 FRONT BUMPER

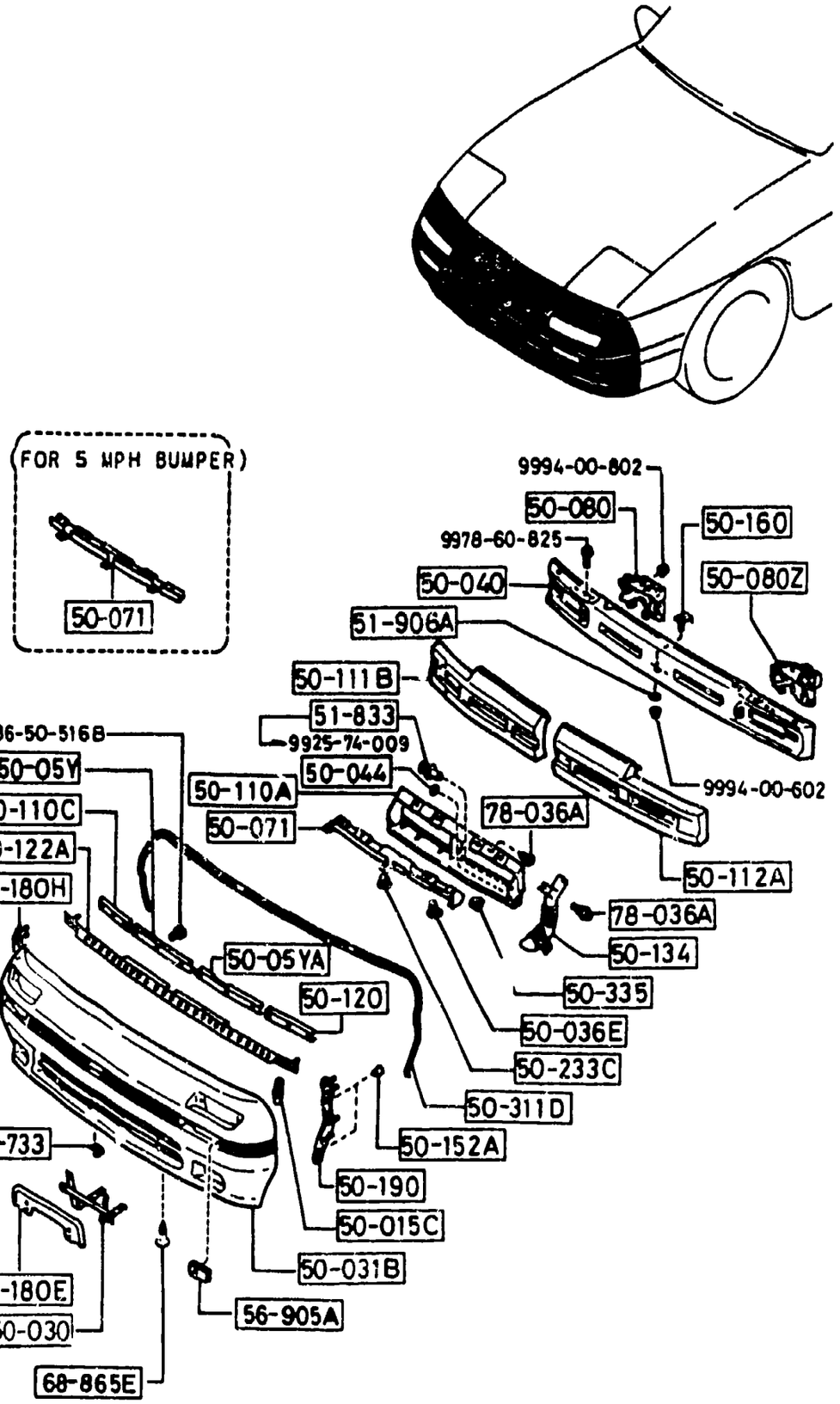

ITEM NO.	D-CODE	DESCRIPTION	PART NO.	QTY	MODEL/DESCRIPTION	REMARKS
	50 015C	BOLT	FB01-50-054	2		
	50 030	HOLDER, LICENSE PLATE	FB01-50-140	1		
	50 031B	FASCIA, FRONT	FB01-50-031C	1		
	50 036E	CLIP	FB01-50-072	4		
	50 040	REINFORCEMENT, BUMPER	FB01-50-151	1		
	50 044	WASHER	FB01-50-135	2		6B01-
	50 05Y	PLATE (R), SET-FRONT FASCIA	FB01-50-05Y	1		
	50 05YA	PLATE (L), SET-FRONT FASCIA	FB01-50-06Y	1		
	50 071	PLATE, SEAL-FRONT BUMPER	FB01-50-071	1		
	50 080	STAY (R), FRONT BUMPER	FB01-50-080A	1		
	50 080Z	STAY (L), FRONT BUMPER	FB01-50-090A	1		
	50 110A	BRACKET, BUMPER	FB01-50-131A	1		
	50 110C	PLATE (R), SET-FRONT BUMPER	FB01-50-110	1		
	50 111B	FOAM (R), ENERGY ABSORBER-FRONT BUMPER	FB01-50-171	1		
	50 112A	FOAM (L), ENERGY ABSORBER-FRONT BUMPER	FB01-50-172	1		
	50 120	PLATE (L), SET-FRONT BUMPER	FB01-50-120	1		
	50 122A	RETAINER, FRONT BUMPER	FB01-50-050A	1		
	50 134	DUCT 'A', AIR-FRONT	FB01-50-134	1		
	50 152A	CLIP	FB01-50-184	8		
	50 160	BRACKET, REINFORCEMENT-FRONT BUMPER	FB01-50-160	2		
	50 180E	PROTECTOR, LICENSE	FB01-50-144	1		
	50 180H	PLATE (R), SET-FRONT BUMPER	FB01-50-180	1		
	50 190	PLATE (L), SET-FRONT BUMPER	FB01-50-190	1		
	50 233C	FASTENER, REAR BUMPER	BF82-50-233	3		
	50 311D	RIBBON, FRONT BUMPER	FB01-50-311	1		
	50 335	NUT, CLIP	FB01-50-133	4		
	50 733	NUT, SPRING-AIR DAM SKIRT	FB01-50-733	13		-5A01
				15		5A01-
	51 833	RIVET, SPLASH SHIELD	B092-51-833	2		
	51 906A	WASHER, ROOF MOULDING	S232-51-906	2		
	56 905A	NUT, SPRING	0820-56-905	4		
	68 865E	FASTENER	S049-68-865	2		
		BLACK	00			
		GRAY	09			
		RED	10			
		BLUE	48			
	78 036A	BOLT	FB01-50-132	5		

5A01 FC33* -107570
6B01 FC33* -522333

5005-1 RADIATOR GRILLE

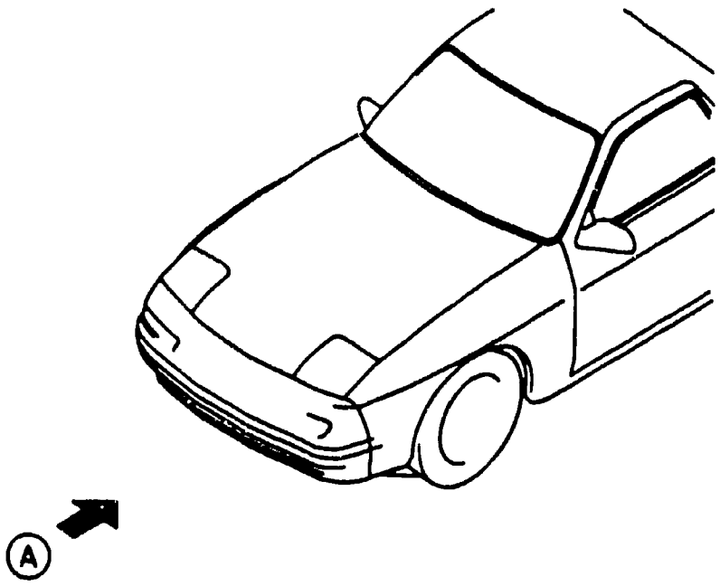

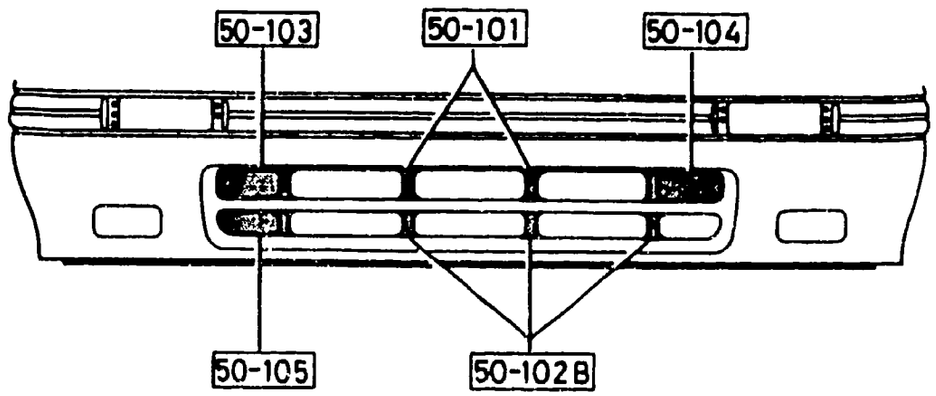

View (A)

ITEM NO.	D-CODE	DESCRIPTION	PART NO.	QTY	MODEL/DESCRIPTION	REMARKS
	50 101	COVER NO. 1, RADIATOR GRILLE	FB01-50-101	2		
	50 102B	COVER NO. 2, RADIATOR GRILLE	FB01-50-102	3		
	50 103	COVER NO. 3, RADIATOR GRILLE	FB01-50-103	1		
	50 104	COVER NO. 4, RADIATOR GRILLE	FB01-50-104	1		
	50 105	COVER NO. 5, RADIATOR GRILLE	FB01-50-105	1		

5010A-1 REAR BUMPER

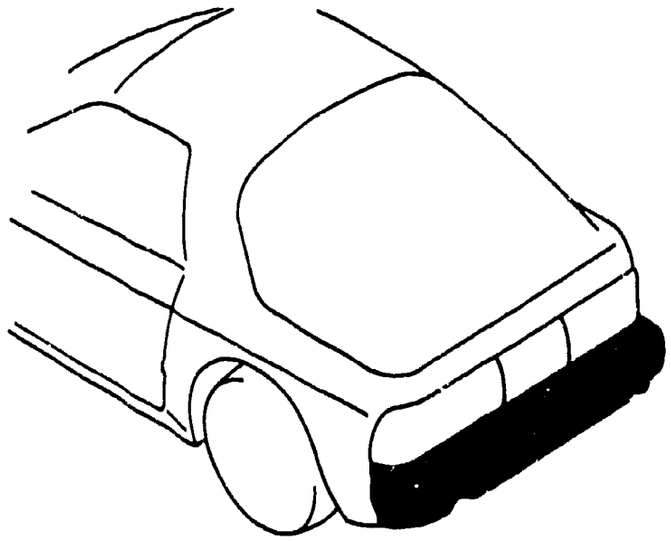

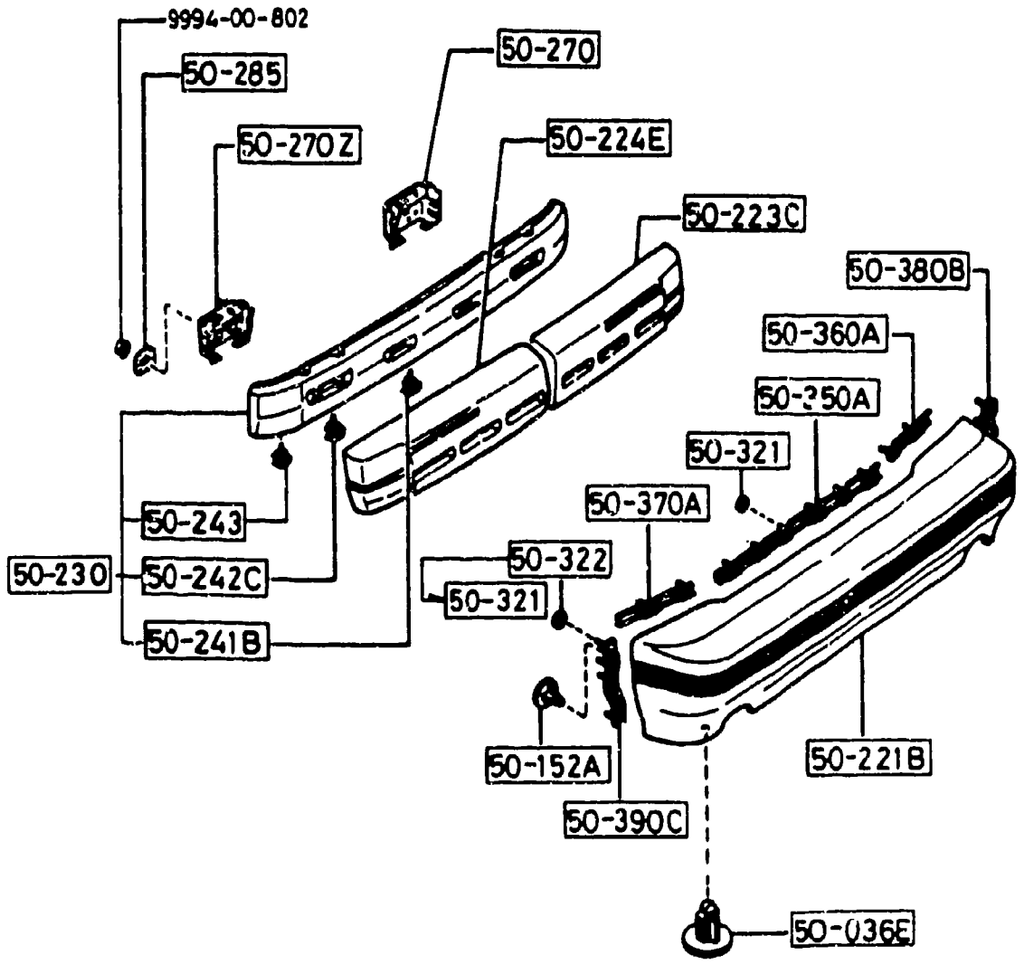

ITEM NO.	D-CODE	DESCRIPTION	PART NO.	QTY	MODEL/DESCRIPTION	REMARKS
	50 036E	CLIP	FB01-50-072	6		
	50 152A	CLIP	3597-50-152	10		
	50 221B	FACE, REAR BUMPER	FB01-50-221	1		
	50 223C	FOAM (R), ENERGY ABSORBER-REAR BUMPER	FB01-50-341	1		
	50 224E	FOAM (L), ENERGY ABSORBER-REAR BUMPER	FB01-50-342	1		
	50 230	REINFORCEMENT, BUMPER	FB01-50-330B	1		
	50 270	STAY (R), REAR BUMPER	FB01-50-280	1		
	50 270Z	STAY (L), REAR BUMPER	FB01-50-290	1		
	50 285	GASKET, SEAL	G030-50-285	2		
	50 321	GASKET 'A', REAR BUMPER	FB01-50-321	10		-5901
				12		5901-
	50 322	GASKET 'B', REAR BUMPER	FB01-50-322	2		-5901
	50 350A	PLATE (C), SET-REAR BUMPER	FB01-50-350	1		
	50 360A	PLATE (R), SET-REAR BUMPER	FB01-50-360	1		
	50 370A	PLATE (L), SET-REAR BUMPER	FB01-50-370	1		
	50 380B	PLATE (R), SET-REAR BUMPER	FB01-50-380	1		
	50 390C	PLATE (L), SET-REAR BUMPER	FB01-50-390	1		

5901 FC33* -102044

5030A-1 WINDOW MOULDINGS

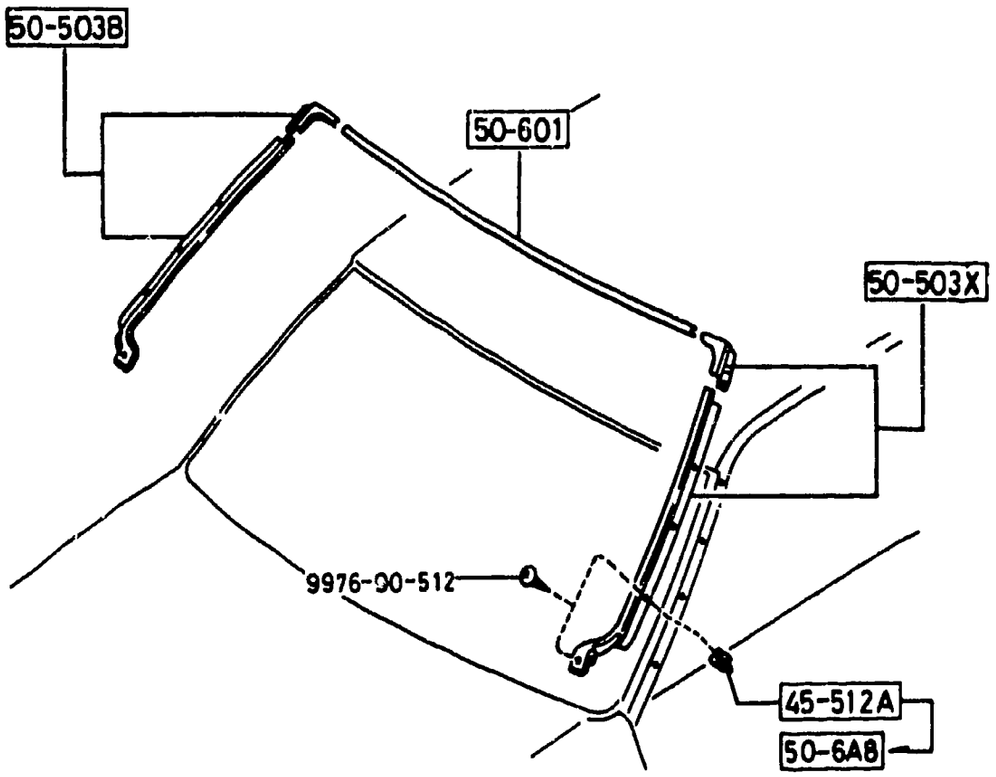

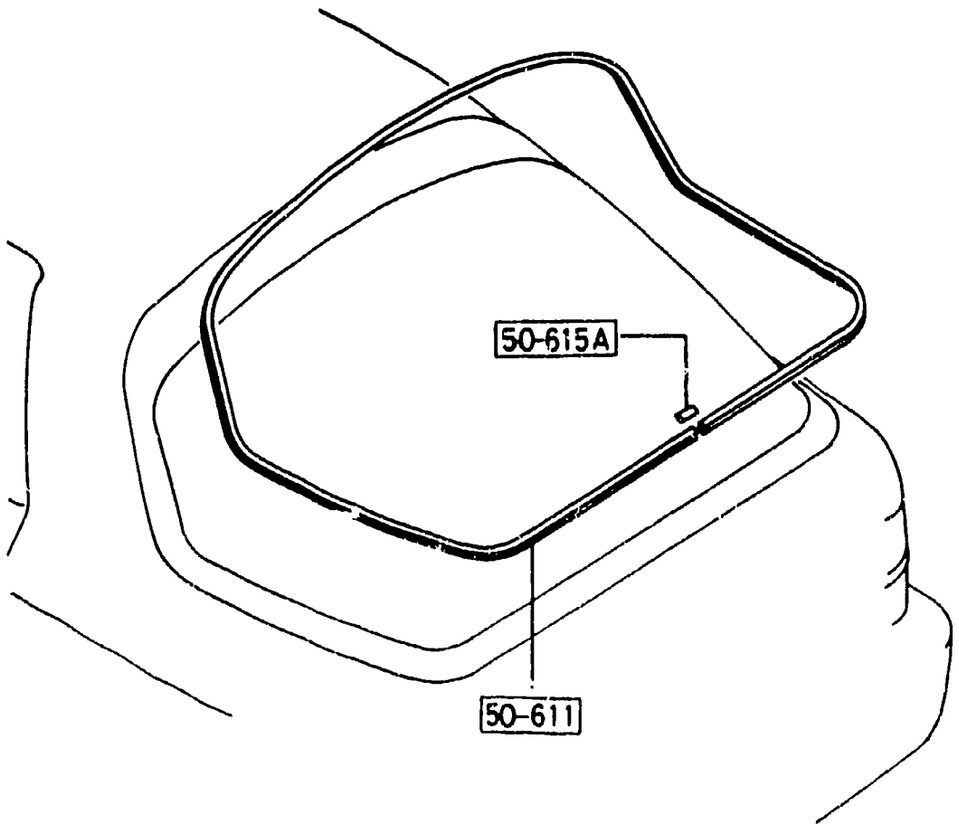

ITEM NO.	D-CODE	DESCRIPTION	PART NO.	QTY	MODEL/DISCRIPTION	REMARKS
	45 512A	GROMMET, SCREW	WA01-45-512	8		-5B18
	50 503B	MOULDING SET (R), FRONT SIDE	8AF1-50-860	1		
	50 503X	MOULDING SET (L), FRONT SIDE	8AF1-50-870	1		
	50 601	MOULDING, WINDOW-FRONT	FB01-50-601A	1		
	50 611	MOULDING, REAR WINDOW	FB01-50-611B	1	COUPE	-7701
		<A>	FB01-50-611C	1	COUPE	7701-
	50 615A	JOINT, BACK WIND MOULDING	FB01-50-615B	1	COUPE	-7701
			FB01-50-615C	1	COUPE	7701-
	50 6A8	GROMMET, SCREW-FRONT WINDOW MLDG.	FB01-50-6A8	8		5B18-

5B18 FC33* -116564
7701 FC33* -550169

5040A-1 BODY MOULDINGS

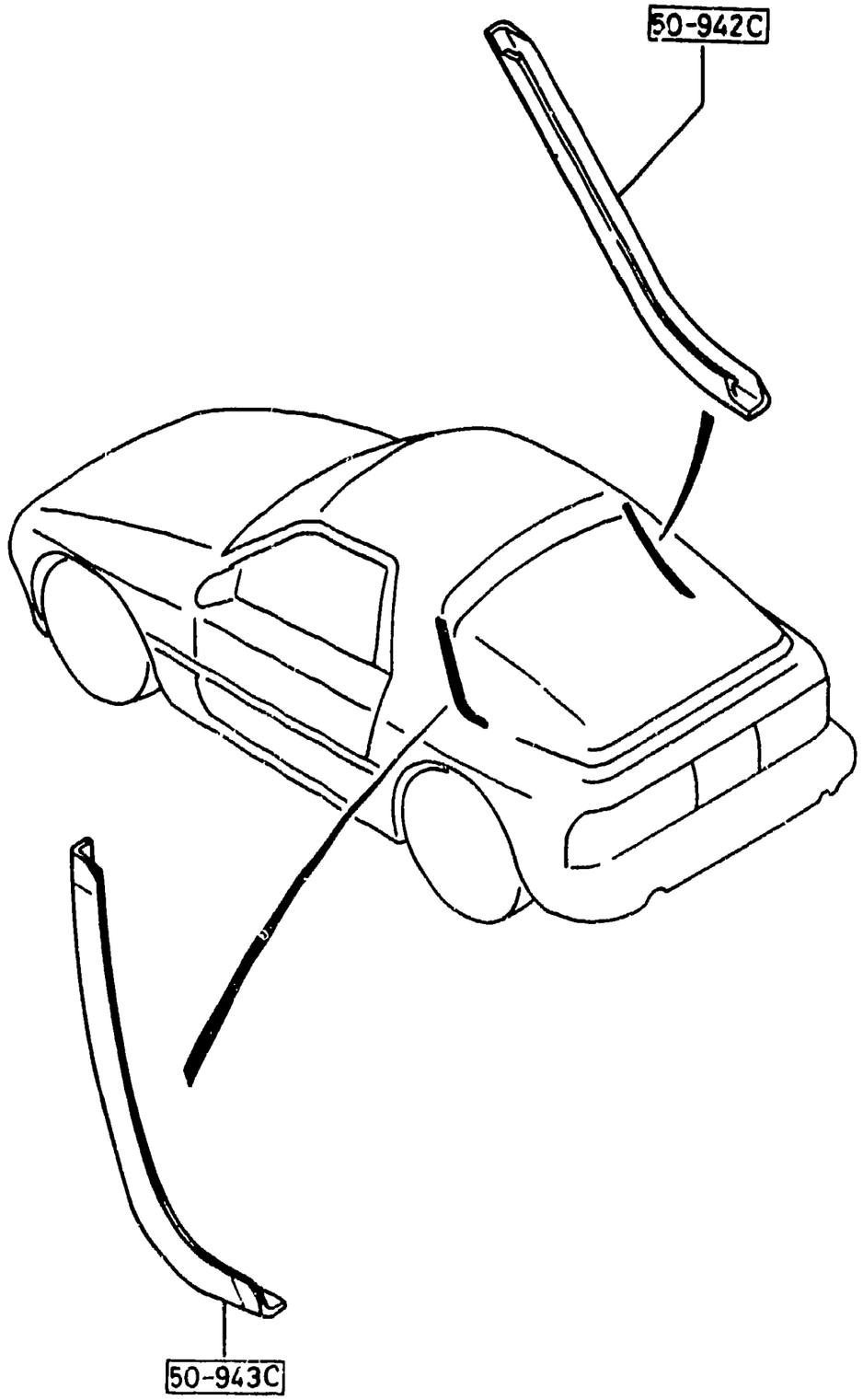

ITEM NO.	D-CODE	DESCRIPTION	PART NO.	QTY	MODEL/DESCRIPTION	REMARKS
	50 942C	MOULDING (R), REAR	FB01-50-942A	1	COUPE REGULAR TYPE	
			FB01-75-942	1	COUPE RAIN TYPE	
	50 943C	MOULDING (L), REAR	FB01-50-943A	1	COUPE REGULAR TYPE	
			FB01-75-943	1	COUPE RAIN TYPE	

5060A-1 SIDE PROTECTORS

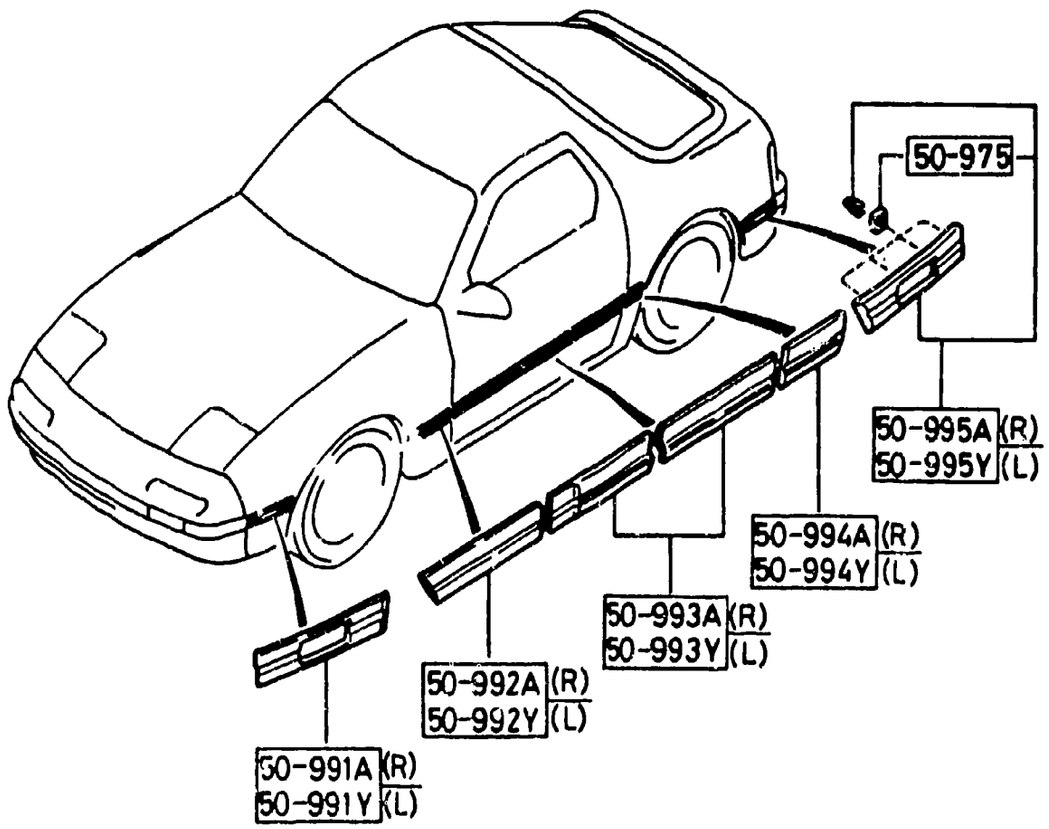

ITEM NO.	D-CODE	DESCRIPTION	PART NO.	QTY	MODEL/DESCRIPTION	REMARKS
	50 975	GASKET	FB01-50-945	6		
	50 991A	PROTECTOR 'A' (R), SIDE	FB01-50-910	1		
	50 991Y	PROTECTOR 'A' (L), SIDE	FB01-50-920	1		
	50 992A	PROTECTOR 'B' (R), SIDE	FB02-50-681	1		
	50 992Y	PROTECTOR 'B' (L), SIDE	FB02-50-691	1		
	50 993A	PROTECTOR 'C' (R), SIDE	FB02-50-682	1		
	50 993Y	PROTECTOR 'C' (L), SIDE	FB02-50-692	1		
	50 994A	PROTECTOR 'D' (R), SIDE	FB02-50-683	1		
	50 994Y	PROTECTOR 'D' (L), SIDE	FB02-50-693	1		
	50 995A	PROTECTOR 'E' (R), SIDE	FB01-50-930	1		
	50 995Y	PROTECTOR 'E' (L), SIDE	FB01-50-940	1		

5100-1 HEAD LAMPS

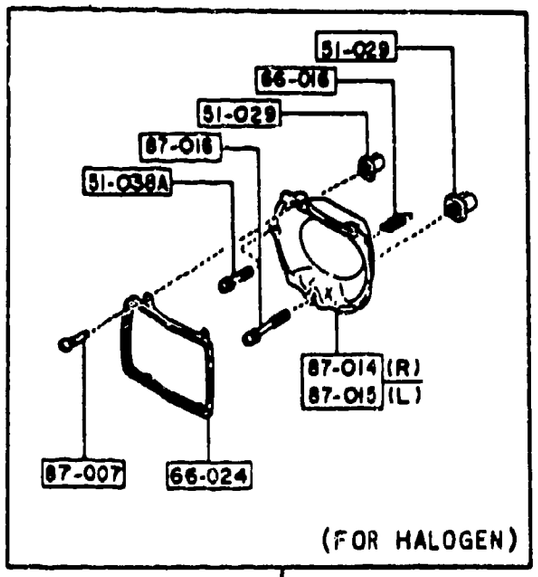

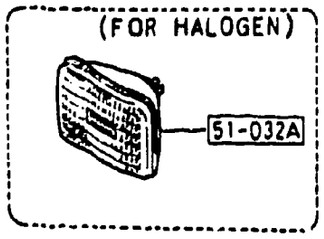

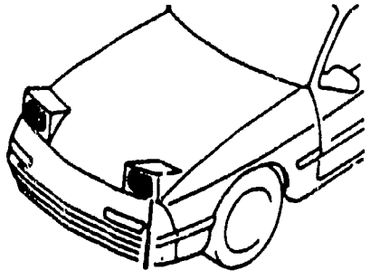

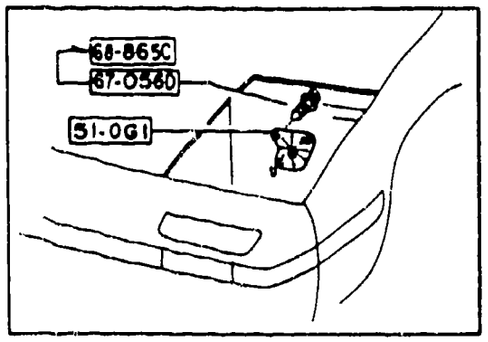

ITEM NO.	D-CODE	DESCRIPTION	PART NO.	QTY	MODEL/DESCRIPTION	REMARKS
	51 029	GROMMET, SCREW	0483-66-061A	4		
	51 031A	LAMP SUB SET (R), HEAD	8BF1-51-032	1	HALOGEN	
	51 031Y	LAMP SUB SET (L), HEAD	8BF1-51-042	1	HALOGEN	
	51 032A	UNIT, HEAD LAMP	0000-11-6054-HP	2	HALOGEN	
	51 038A	SCREW, ADJUST	FB01-51-047	2		
	51 0G1	COVER, SEAL-SHROUD	FB01-51-0G1	2		
	66 016	SPRING, ADJUST	FB01-51-036	2		
	66 024	RING, RETAINING	8A03-51-033	2		
	67 056D	RIVET	W023-67-056	6		
	84 851A	BEAM, SEALED	0000-11-6052	2		
	87 007	SCREW	8239-51-035	8		
	87 014	RING (R) MOUNTING	FB01-51-032	1		
	87 015	RING (L) MOUNTING	FB01-51-042	1		
	87 016	SCREW, ADJUST	FB01-51-037	2		
		REFER TO ACC. BULL. NO. XE-4 FOR FOG & DRIVING LIGHTS INFO.				

5103-1 HEAD LAMP RETRACTORS

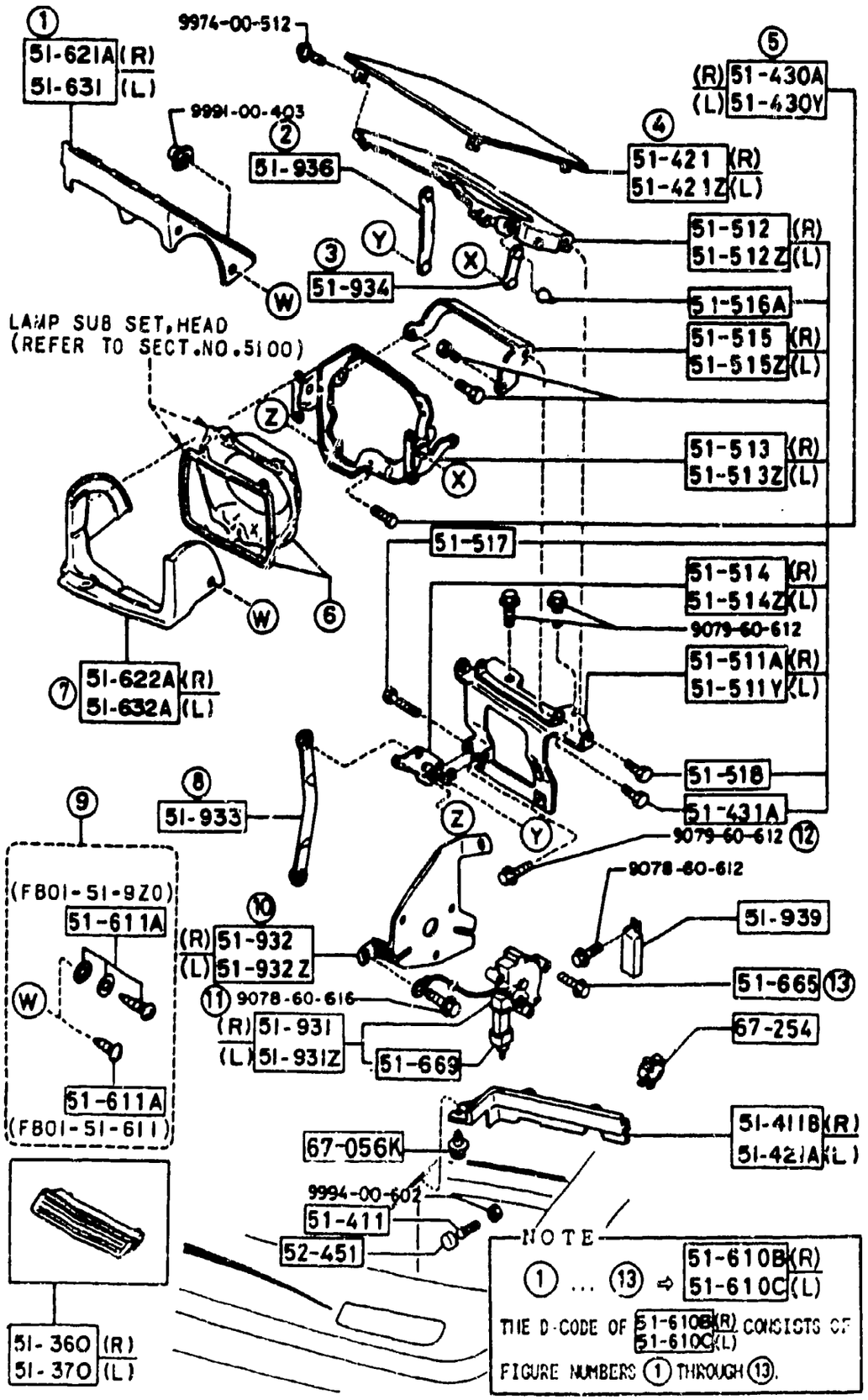

ITEM NO.	D-CODE	DESCRIPTION	PART NO.	QTY	MODEL/DESCRIPTION	REMARKS
	51 360	COVER (R), PASSING HOLE	FB01-51-360B	1		
	51 370	COVER (L), PASSING HOLE	FB01-51-370B	1		
	51 411	SCREW, STOPPER	8871-51-411	2		
	51 411B	PROTECTOR (R), RETRACTABLE	FB01-51-411A	1		
	51 421	LID (R), LAMP	FB01-51-623	1		
	51 421A	PROTECTOR (L), RETRACTABLE	FB01-51-421A	1		
	51 421Z	LID (L), LAMP	FB01-51-633	1		
	51 430A	HINGE (R), LID-LAMP	FB01-51-510F	1		
	51 430Y	HINGE (L), LID-LAMP	FB01-51-520F	1		
	51 431A	BOLT, HINGE	H001-51-511	10		
	51 511A	BRACKET (R), HINGE-LAMP LID	FB01-51-511	1		
	51 511Y	BRACKET (L), HINGE-LAMP LID	FB01-51-521	1		
	51 512	FRAME (R), LAMP LID	FB01-51-512	1		
	51 512Z	FRAME (L), LAMP LID	FB01-51-522	1		
	51 513	HOUSING (R), LAMP-LID HINGE	FB01-51-513D	1		
	51 513Z	HOUSING (L), LAMP-LID HINGE	FB01-51-523D	1		
	51 514	ARM (R), LOWER-LID HINGE	FB01-51-514	1		
	51 514Z	ARM (L), LOWER-LID HINGE	FB01-51-524	1		
	51 515	ARM (R), UPPER-LID HINGE	FB01-51-515	1		
	51 515Z	ARM (L), UPPER-LID HINGE	FB01-51-525	1		
	51 516A	CAP, HINGE-HEAD LAMP RETRACTABLE	FB01-51-516	10		
	51 517	BOLT, HINGE-HEAD LAMP RETRACTABLE	FB01-51-517	2		
	51 518	BOLT, HINGE-HEAD LAMP RETRACTABLE	FB01-51-518	4		
	51 611A	SCREW, HEAD LAMP BEZEL	FB01-51-611	12		
	51 621A	BEZEL (R), HEAD LAMP-UPPER	FB01-51-621A	1		
	51 622A	BEZEL (R), HEAD LAMP-LOWER	FB01-51-622A	1		
	51 631	BEZEL (HEAD LAMP-UPPER	FB01-51-631A	1		
	51 632A	BEZEL (L), HEAD LAMP-LOWER	FB01-51-632A	1		
	51 931	MOTOR (R)	FB01-51-66X	1	W/ RELAY	
	51 931Z	MOTOR (L)	FB01-51-67X	1	W/ RELAY	
	51 932	BRACKET (R)	FB01-51-662A	1		
	51 932Z	BRACKET (L)	FB01-51-672A	1		
	51 933	ROD, MOTOR	FB01-51-664A	2		
	51 934	ROD 'A'	FB01-51-651A	2		
	51 936	ROD 'B'	FB01-51-652A	2		
	51 939	RELAY	FB01-51-663	2		
	52 451	CUSHION	0866-52-451	2		
	67 056K	RIVET	UB39-50-795	6		
	67 254	CLIP, CABLE	S113-67-254A	2		

5105-1 FRONT COMBINATION LAMPS

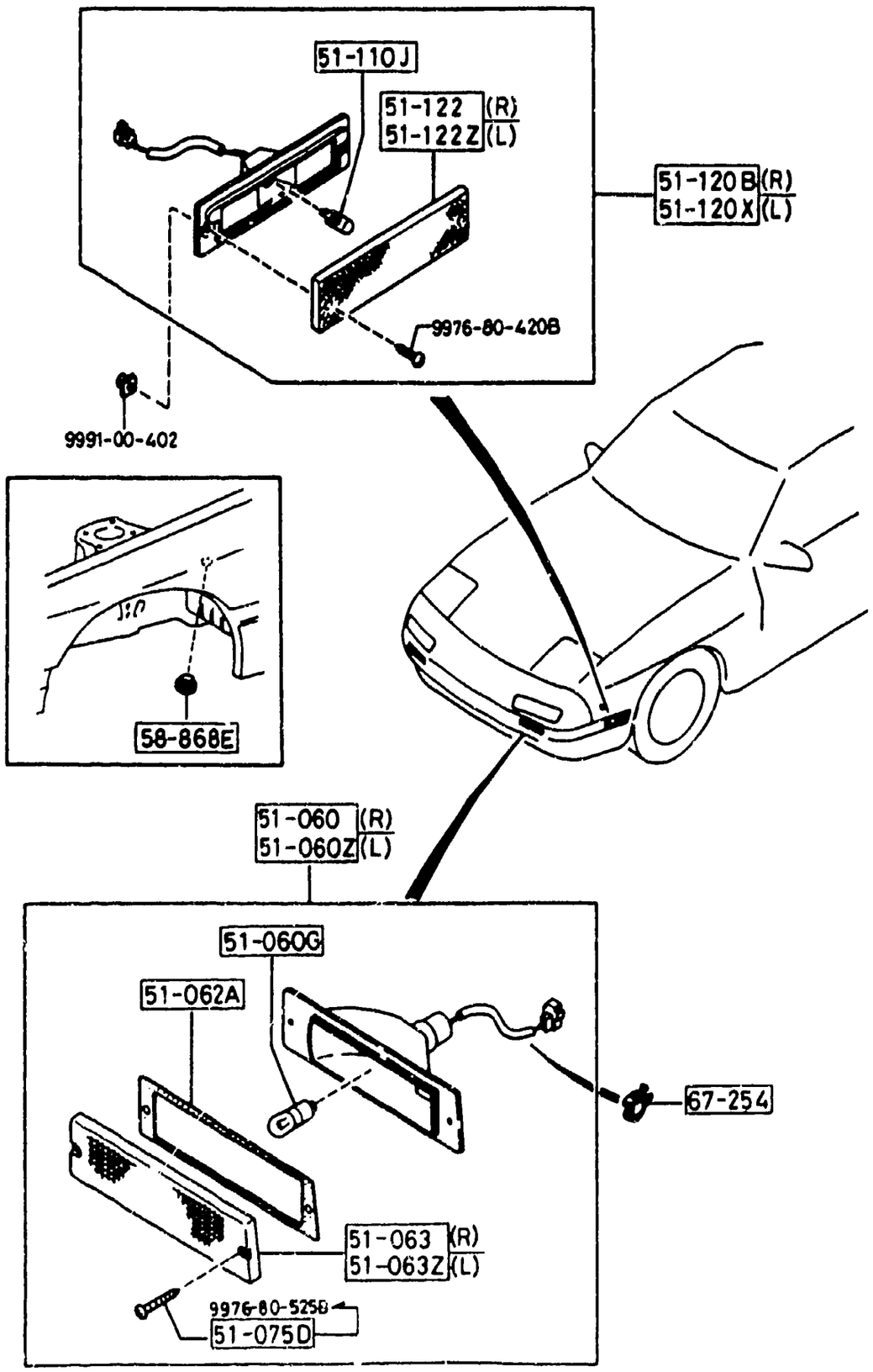

ITEM NO.	D-CODE	DESCRIPTION	PART NO	QTY	MODEL/DESCRIPTION	REMARKS
	51 060	LAMP SET (R), FRONT COMBINATION	8BF1-51-060A	1		
	51 060G	BULB	9970-14-278	2	12V 27W/8W	
	51 060Z	LAMP SET (L), FRONT COMBINATION	8BF1-51-070A	1		
	51 062A	GASKET, FRONT COMBINATION	FB01-51-063	2		
	51 063	LENS (R), FRONT COMBINATION	FB01-51-061	1		
	51 063Z	LENS (L), FRONT COMBINATION	FB01-51-071	1		
	51 075D	SCREW, TAPPING	G031-51-075	4		
	51 110J	BULB	0000-11-0194	2	12V 3.8W	
	51 120B	LAMP SET (R), SIDE TURN	8BF1-51-120	1		
	51 120X	LAMP SET (L), SIDE TURN	8BF1-51-130	1		
	51 122	LENS (R), SIDE TURN	FB01-51-123	1		
	51 122Z	LENS (L), SIDE TURN	FB01-51-133	1		
	58 868E	PLUG, SERVICE COVER	0559-58-868	2		
	67 254	CLIP, CABLE	S113-67-254A	2		

SECTION INDEX -- BODY

STARTING LOCATION	SECT NO	SECTION NAME
2 - C 3	0900A	KEY SETS
2 - E 3	5000	FRONT BUMPER
2 - F 3	5005	RADIATOR GRILLE
2 - G 3	5010A	REAR BUMPER
2 - H 3	5030A	WINDOW MOULDINGS
2 - I 3	5040A	BODY MOULDINGS
2 - J 3	5060A	SIDE PROTECTORS
2 - K 3	5100	HEAD LAMPS
2 - L 3	5103	HEAD LAMP RETRACTORS
2 - M 3	5105	FRONT COMBINATION LAMPS
2 - C 4	5110A	REAR COMBINATION LAMPS
2 - E 4	5120	LICENSE LAMPS
2 - F 4	5125	INTERIOR LAMPS
2 - G 4	5130	OVERHEAD CONSOLE (COUPE)
2 - H 4	5170	ORNAMENTS
2 - I 4	5180	COWL & EXTRACTOR GILLES
2 - K 4	5230	HOOD
2 - L 4	5260	TRUNK LID (CONVERTIBLE)
2 - M 4	5310	BODY PANELS (FRONT) (COUPE)
2 - N 4	5310A	BODY PANELS (FRONT) (CONVERTIBLE)
2 - C 5	5320	BODY PANELS (FENDER & WHEEL APRON) (COUPE)
2 - D 5	5320B	BODY PANELS (FENDER & WHEEL APRON) (CONVERTIBLE)
2 - E 5	5330	BODY PANELS (DASH & COWL PANEL)
2 - F 5	5340A	BODY PANELS (SIDE) (COUPE)
2 - H 5	5340AA	BODY PANELS (SIDE) (CONVERTIBLE)
2 - K 5	5360A	BODY PANELS (ROOF) (COUPE,
2 - L 5	5370	BODY PANELS (FLOOR) (COUPE)
2 - M 5	5370A	BODY PANELS (FLOOR) (CONVERTIBLE)
2 - C 6	5390	FLOOR ATTACHMENTS (COUPE)
2 - E 6	5390A	FLOOR ATTACHMENTS (CONVERTIBLE)
2 - G 6	5500	DASHBOARD EQUIPMENTS (COUPE) (W O ANTI-LOCK BRAKE SYSTEM)
2 - I 6	5500A	DASHBOARD EQUIPMENTS (COUPE) (ANTI-LOCK BRAKE SYSTEM)
2 - J 6	5500B	DASHBOARD EQUIPMENTS (CONVERTIBLE)
2 - K 6	5520	METER HOOD
2 - L 6	5530	SPEEDOMETER CABLE
2 - M 6	5540	METER COMPONENTS (COUPE) (W O ANTI-LOCK BRAKE SYSTEM)
2 - C 7	5540A	METER COMPONENTS (COUPE) (ANTI-LOCK BRAKE SYSTEM)
2 - E 7	5540B	METER COMPONENTS (CONVERTIBLE)
2 - F 7	5560	DASHBOARD & RELATED PARTS
2 - I 7	5570	CONSOLE
2 - K 7	5580	VENTILATOR
2 - C 8	5700A	FRONT SEATS (COUPE)
2 - C 9	5700AA	FRONT SEATS (COUPE) (LEATHER)
2 - C10	5700AB	FRONT SEATS (CONVERTIBLE) (CLOTH)
2 - F10	5700AC	FRONT SEATS (CONVERTIBLE) (LEATHER)
2 - J10	5750A	REAR SEATS (CLOTH)
2 - C11	5750AA	REAR SEATS (LEATHER)
2 - H11	5790A	SEAT BELTS
2 - J11	5800A	FRONT DOORS (COUPE)
2 - K11	5800AA	FRONT DOORS (CONVERTIBLE)
2 - C12	5830A	FRONT DOOR MECHANISMS (COUPE)
2 - H12	5830AA	FRONT DOOR MECHANISMS (CONVERTIBLE)
2 - C13	5840A	FRONT DOOR TRIMS & RELATED PARTS (COUPE)
2 - K13	5840AB	FRONT DOOR TRIMS & RELATED PARTS (CONVERTIBLE)
2 - N13	6100	HEATER
2 - C14	6110	HEATER UNIT COMPONENTS
2 - D14	6115	HEATER CONTROLS COMPONENTS
2 - E14	6120	HEATER BLOWER COMPONENTS
2 - F14	6130	AIR CONDITIONER (W O AIR CONDITIONER)
2 - G14	6132A	CONDENSER PACKAGE
2 - I14	6142A	COMPRESSOR MOUNTING KIT, COMPRESSOR CLUTCH ASSEMBLY & REPAIR PARTS
2 - J14	6152A	EVAPORATOR PACKAGE
2 - K14	6200	LIFT GATE
2 - L14	6230	LIFT GATE MECHANISMS (COUPE)
2 - N14	6300A	WINDOW GLASSES
2 - C15	6330	SUNROOF (COUPE)
2 - E15	6330A	SOFT TOP (CONVERTIBLE)
2 - G15	6600B	SWITCHES & RELAYS (ENGINE) (W O TURBO)
2 - J15	6600BA	SWITCHES & RELAYS (ENGINE) (TURBO)
2 - M15	6610	DASHBOARD SWITCHES (MANUAL OPERATING)
2 - N15	6611	COMBINATION SWITCH
2 - C16	6612	CLUSTER SWITCH
2 - D16	6615	POWER WINDOW SWITCHES
2 - E16	6620	DOOR SWITCH
2 - F16	6630	RELAYS & CPU (BODY)
2 - G16	6635	HORNS
2 - H16	6640	AUTO CRUISE CONTROL SYSTEM
2 - I16	6680	AUDIO SYSTEMS (RADIO & TAPE DECK)

5110A-1 REAR COMBINATION LAMPS

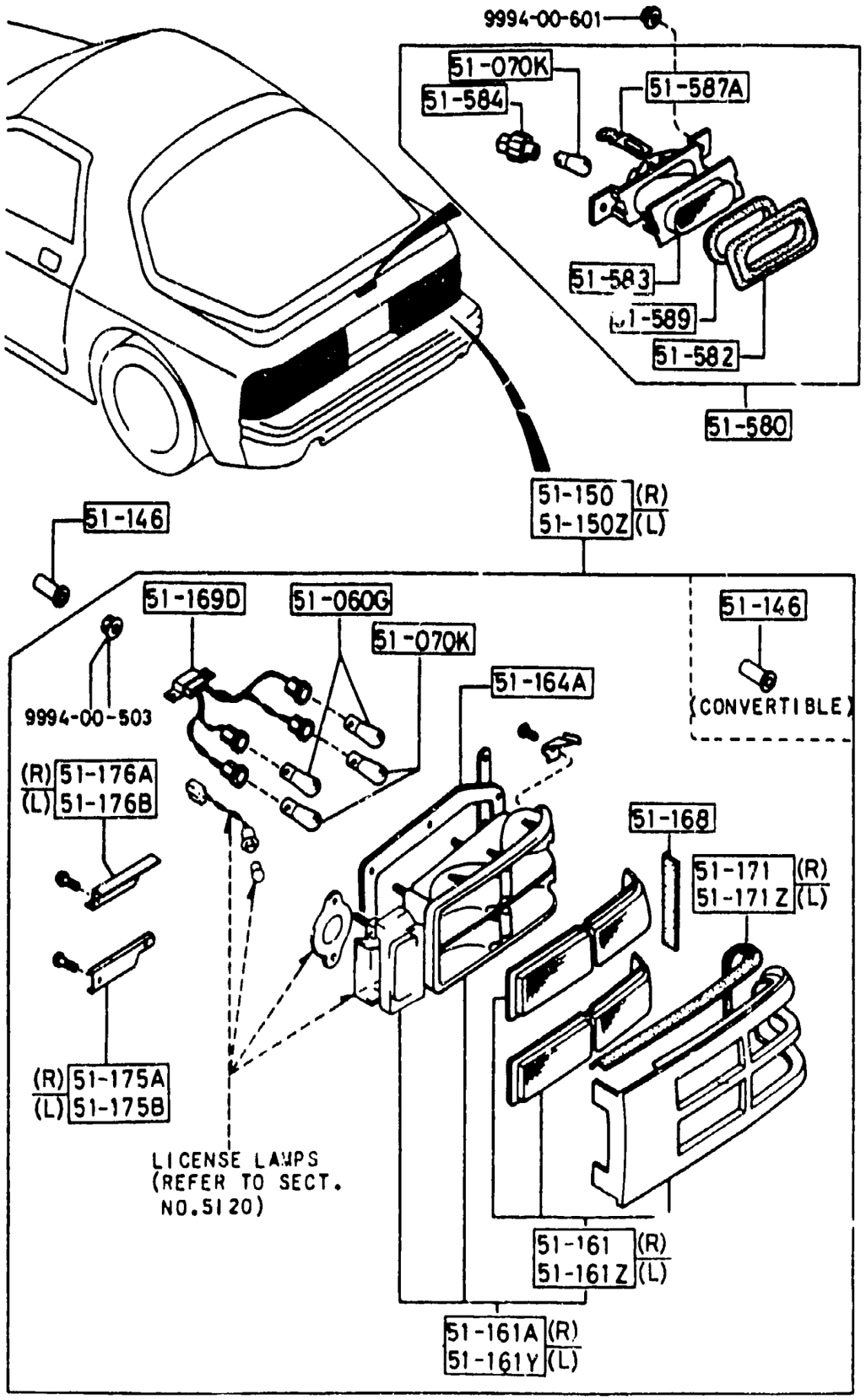

ITEM NO.	D-CODE	DESCRIPTION	PART NO.	QTY	MODEL/DESCRIPTION	REMARKS
	51 060G	BULB	9970-14-27B	4	12V 27W/8W	
	51 070K	BULB	0000-11-1156	5	12V 27W	
	51 146	GROMMET, SCREW-REAR COMBINATION	FB01-51-141	2	COUPE	
			FB67-51-141	2	CONV.	
	51 150	LAMP SET (R), REAR COMBINATION	BBF1-51-150	1	COUPE	
			BBF7-51-150	1	CONV.	
	51 150Z	LAMP SET (L), REAR COMBINATION	BBF1-51-160	1	COUPE	
				1	CONV.	
	51 161	LENS (R), REAR COMBINATION	FB01-51-151	1	COUPE	
			FB67-51-151	1	CONVERTIBLE	
	51 161A	LENS & BODY (R), REAR COMBINATION	FB01-51-170	1	COUPE	
			FB67-51-170	1	CONV.	
	51 161Y	LENS & BODY (L), REAR COMBINATION	FB01-51-180	1	COUPE	
			FB67-51-180	1	CONV.	
	51 161Z	LENS (L), REAR COMBINATION	FB01-51-161	1	COUPE	
			FB67-51-161	1	CONV.	
	51 164A	GASKET, REAR COMBINATION	FB01-51-156	2		
	51 168	PROTECTOR	FB01-51-171	2	COUPE	
			FB34-51-171	2	CONVERTIBLE	
	51 169D	CORD, REAR COMBINATION	FB01-51-158	2		
	51 171	PROTECTOR (R), REAR COMBINATION	FB01-51-159	1	COUPE	
			FB34-51-159	1	CONV.	
	51 171Z	PROTECTOR (L), REAR COMBINATION	FB01-51-169	1	COUPE	
			FB34-51-169	1	CONV.	
	51 175A	REINFORCEMENT (R), RR. COMB. LAMP-UP.	FB01-51-175	1	COUPE	
	51 175B	REINFORCEMENT (L), RR. COMB. LAMP-UP.	FB01-51-185	1	COUPE	
	51 176A	REINFORCEMENT (R), RR. COMB. LAMP-LWR.	FB01-51-176	1	COUPE	
	51 176B	REINFORCEMENT (L), RR. COMB. LAMP-LWR.	FB01-51-186	1	COUPE	
	51 580	LAMP, STOP-HIGH MOUNTED	FB01-51-580B	1		
	51 582	GASKET, STOP LAMP-HIGH MOUNTED	FB01-51-582A	1		
	51 583	LENS, STOP LAMP-HIGH MOUNTED	FB01-51-583A	1		

5110A-2 REAR COMBINATION LAMPS

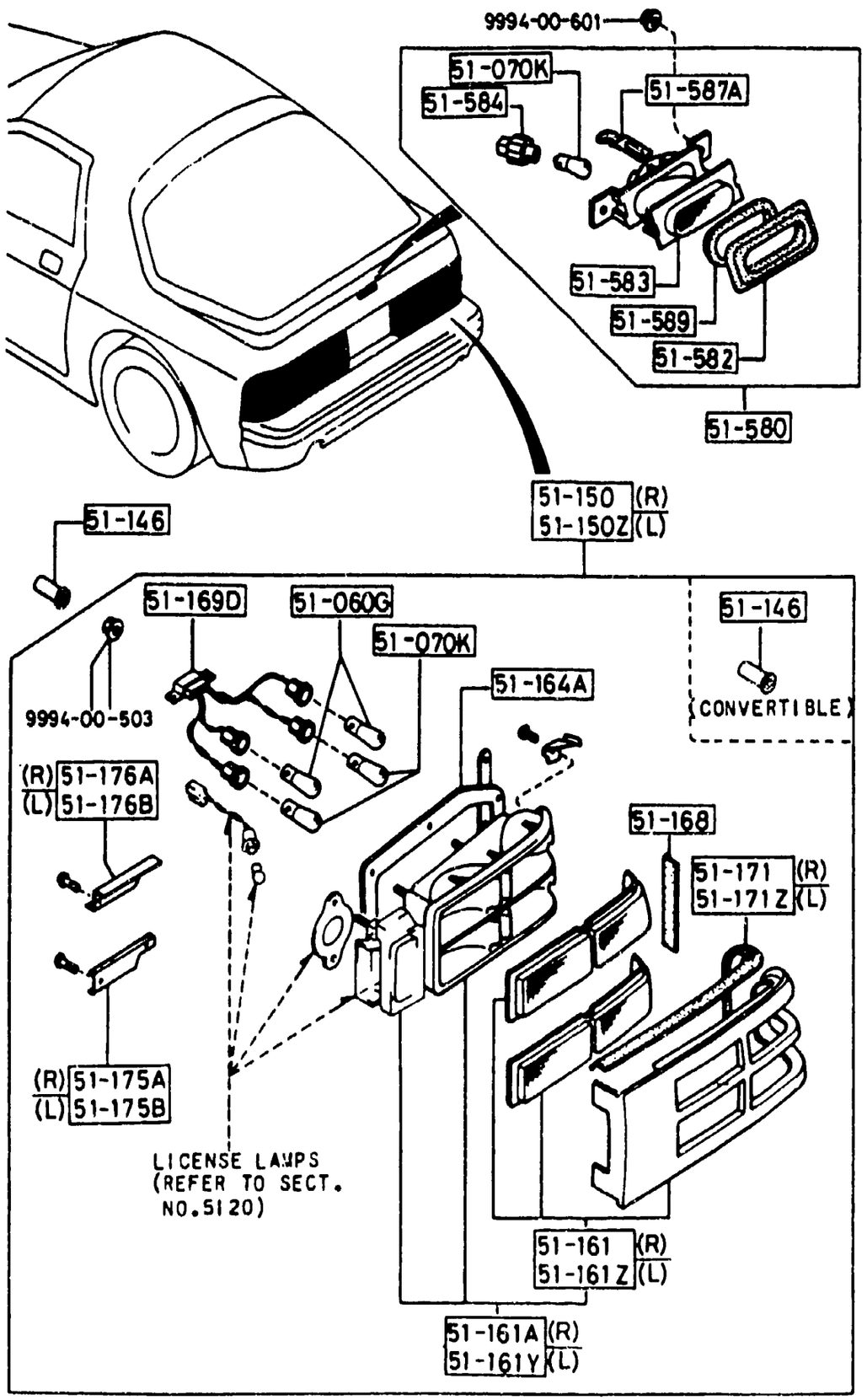

ITEM NO.	D-CODE	DESCRIPTION	PART NO.	QTY	MODEL/DESCRIPTION	REMARKS
	51 584	SOCKET, STOP LAMP-HIGH MOUNTED	FB01-51-584A	1		
	51 587A	CLIP, STOP LAMP-HIGH MOUNTED	FB01-51-587	1		
	51 589	PROTECTOR, STOP LAMP-HIGH MOUNTED	FB01-51-586	1		

5120-1 LICENSE LAMPS

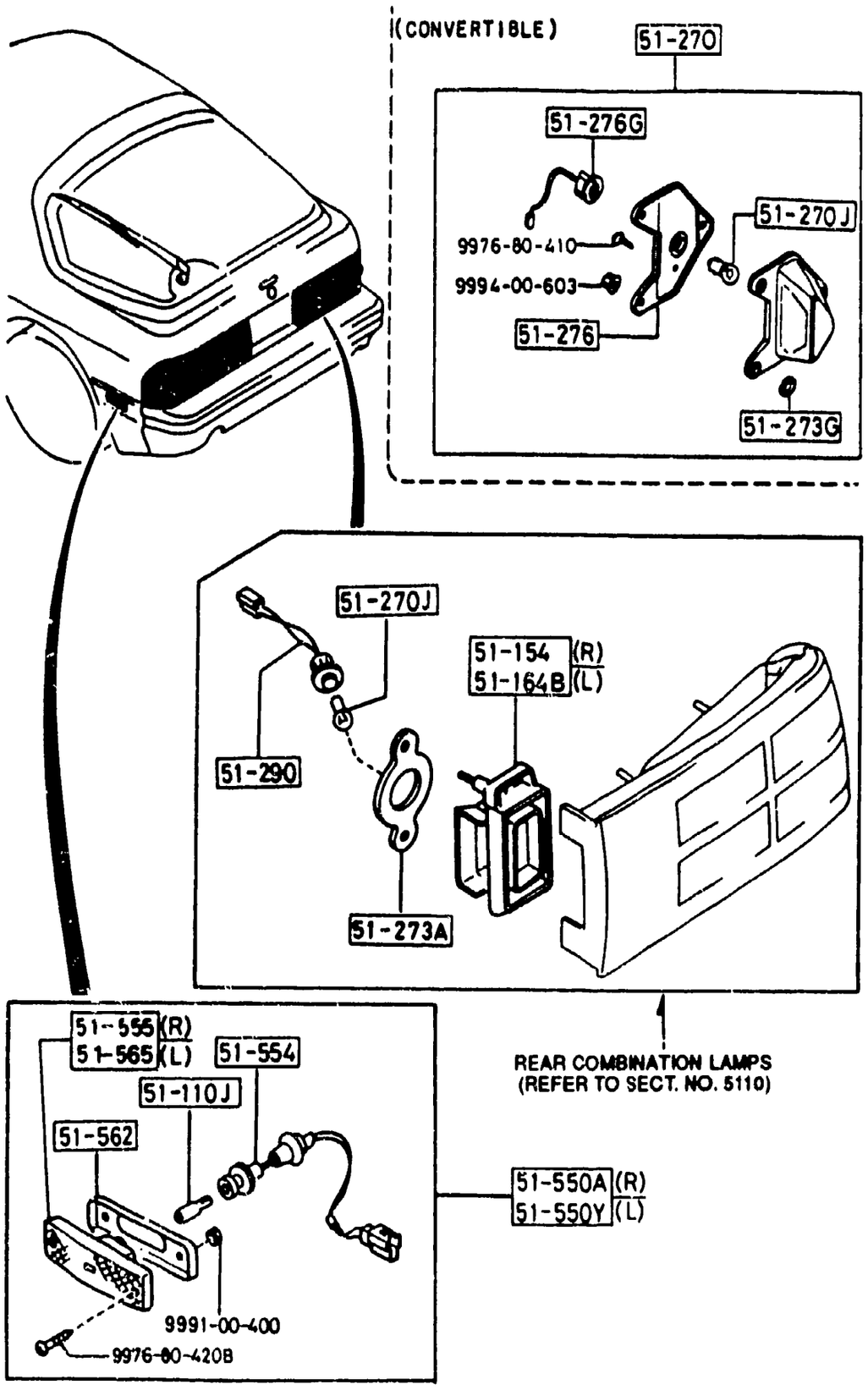

ITEM NO.	D-CODE	DESCRIPTION	PART NO.	QTY	MODEL/DESCRIPTION	REMARKS
	51 110J	BULB	0000-11-0194	2	12V 3.8W	
	51 154	HOUSING (R), LICENSE LAMP	FB01-51-154	1	COUPE	
	51 164B	HOUSING (L), LICENSE LAMP	FB01-51-164	1	COUPE	
	51 270	LAMP, LICENSE	8BF1-51-270	2	CONV.	
	51 270J	BULB	0000-11-0089	2	12V 7.5W	
	51 273A	GASKET, LICENSE	FB01-51-157	2	COUPE	
	51 273G	GASKET, LICENSE LAMP	FB67-51-273	2	CONV.	
	51 276	SHADE, LAMP-LICENSE	FB67-51-276	2	CONV.	
	51 276G	SOCKET, LICENSE LAMP	FB67-51-272	2	CONV.	
	51 290	CORD, LICENSE LAMP	FB01-51-172	2	COUPE	
	51 550A	LAMP (R), SIDE TURN-REAR	8BF1-51-550	1		
	51 550Y	LAMP (L), SIDE TURN-REAR	8BF1-51-560	1		
	51 554	SOCKET, REAR SIDE TURN LAMP	FB01-51-554	2		
	51 555	UNIT (R), SIDE TURN-REAR	FB01-51-555	1		
	51 562	GASKET, REAR SIDE TURN	FB01-51-552A	2		
	51 565	UNIT (L), SIDE TURN-REAR	FB01-51-565	1		

5125-1 INTERIOR LAMPS

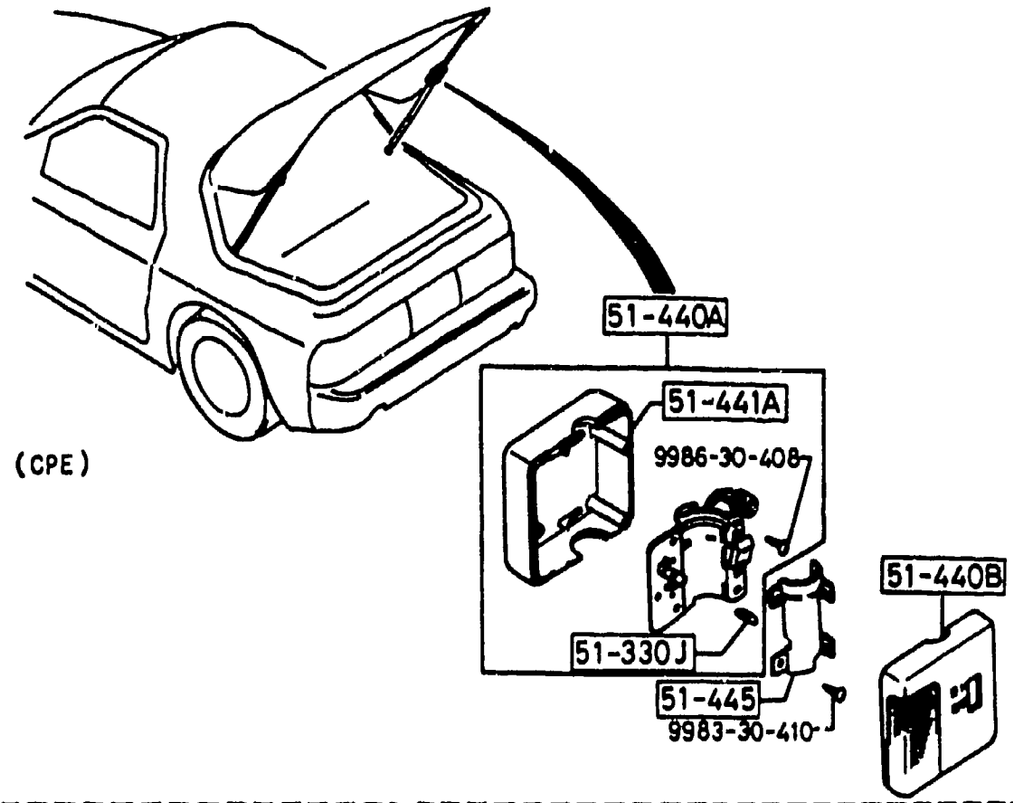

(CPE)

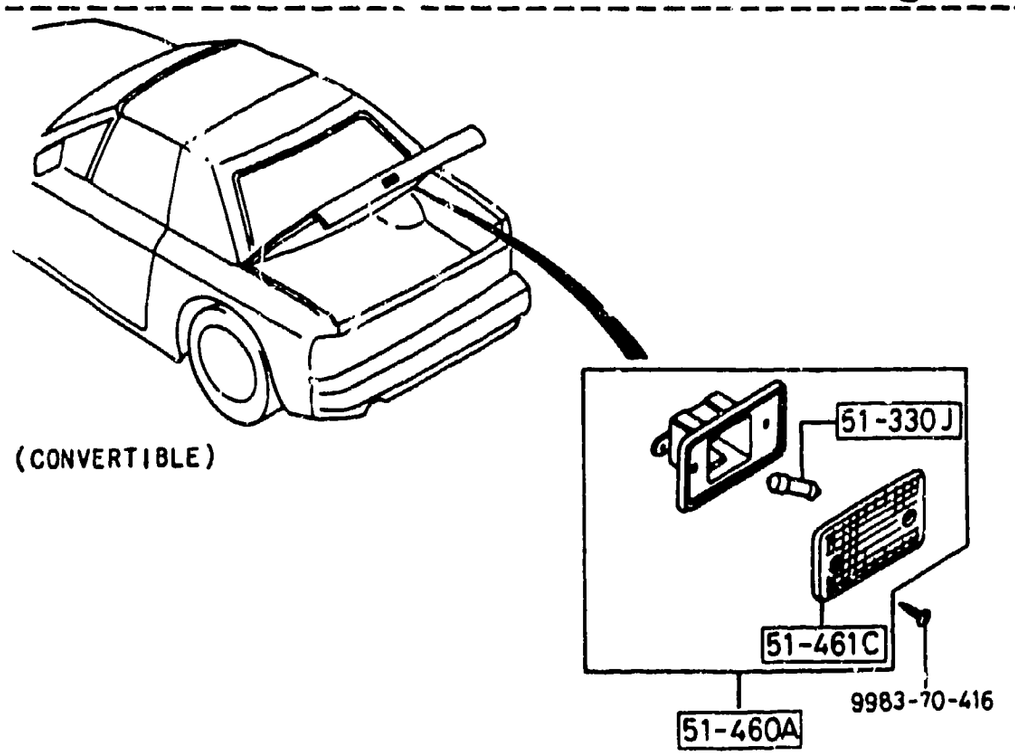

(CONVERTIBLE)

ITEM NO.	D-CODE	DESCRIPTION	PART NO.	QTY	MODEL/DESCRIPTION	REMARKS
	51 330J	BULB	9970-15-030	1	12V 5W	
		<AN>	0000-11-3022	1		
	51 440A	LAMP, CARGO ROOM	FB01-51-430	1	COUPE	
	51 440B	BODY 'B', LAMP-CARGO ROOM	FB01-51-442A	1	COUPE	
	51 441A	BODY 'A', LAMP-CARGO ROOM	FB01-51-441	1	COUPE	
	51 445	BRACKET 'B', LAMP-CARGO ROOM	FB01-51-445	1	COUPE	
	51 460A	LAMP, COURTESY	8545-51-460	1	CONV	
	51 461C	LENS, COURTESY	8545-51-461	1	CONV	

5130-1 OVERHEAD CONSOLE (COUPE)

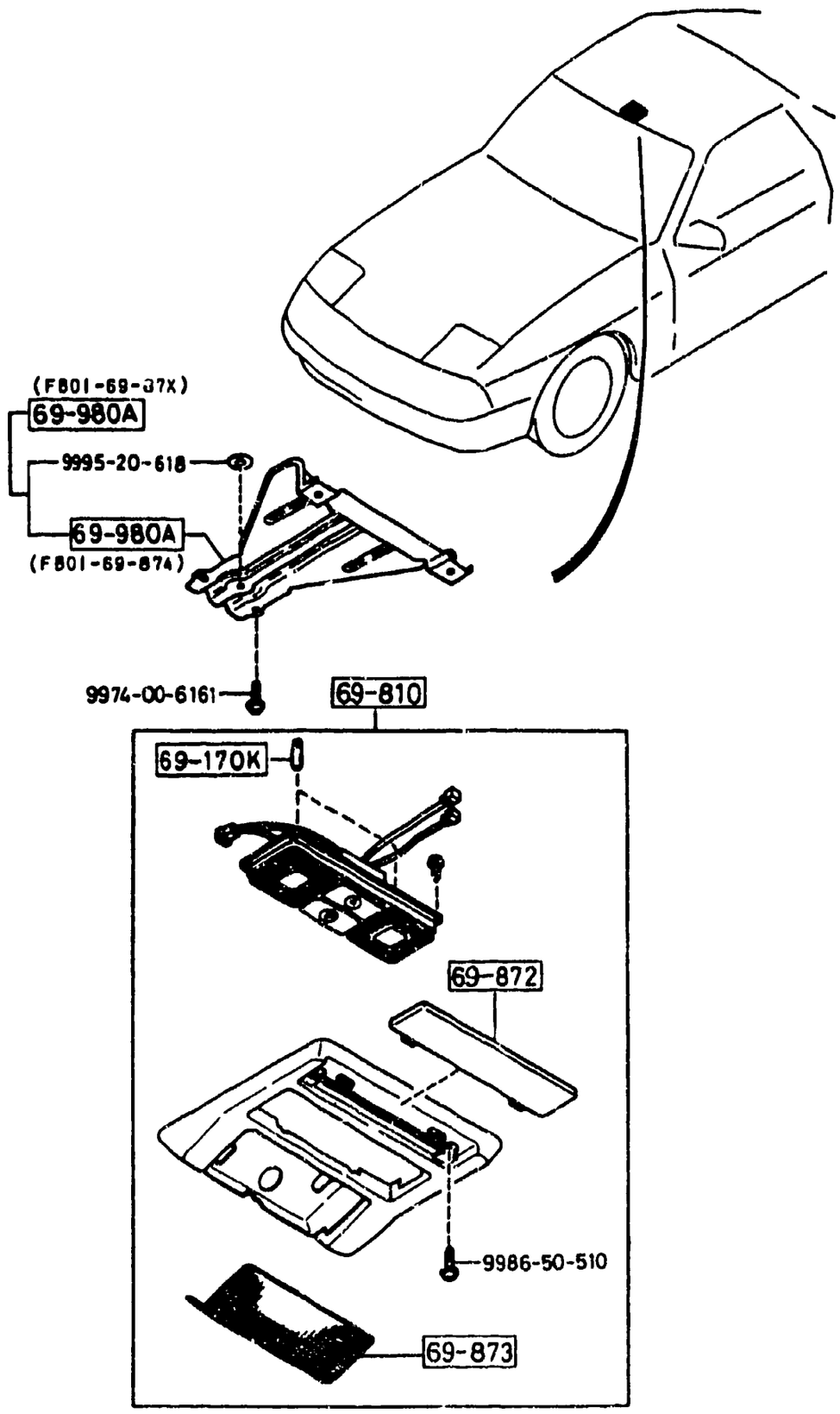

ITEM NO.	D-CODE	DESCRIPTION	PART NO.	QTY	MODEL/DESCRIPTION	REMARKS
	69 810	CONSOLE, OVERHEAD	FB02-69-870A	1	W/ SPOT LAMP W/O SUNROOF	
		DARK GRAY	07			
		RED	10			
		BLUE	48			
			FB03-69-870A	1	W/ SPOT LAMP W/ SUNROOF	-7501
		DARK GRAY	07			
		RED	10			
		BLUE	48			
	69 872	COVER, OVERHEAD CONSOLE	FB01-69-872	1		
		DARK GRAY	07			
		RED	10			
		BLUE	48			
	69 873	LENS, ROOM LAMP-HEAD CONSOLE	FB01-69-873	1		
	69 980A	BRACKET, OVERHEAD CONSOLE	FB01-69-87X	1	W/O SUNROOF	
			FB01-69-874	1	W/O SUNROOF	
			FB01-69-87X	1	SUNROOF	-7501
			FB01-69-874	1	SUNROOF	-7501

7501 FC33* -547831

5170-1 ORNAMENTS

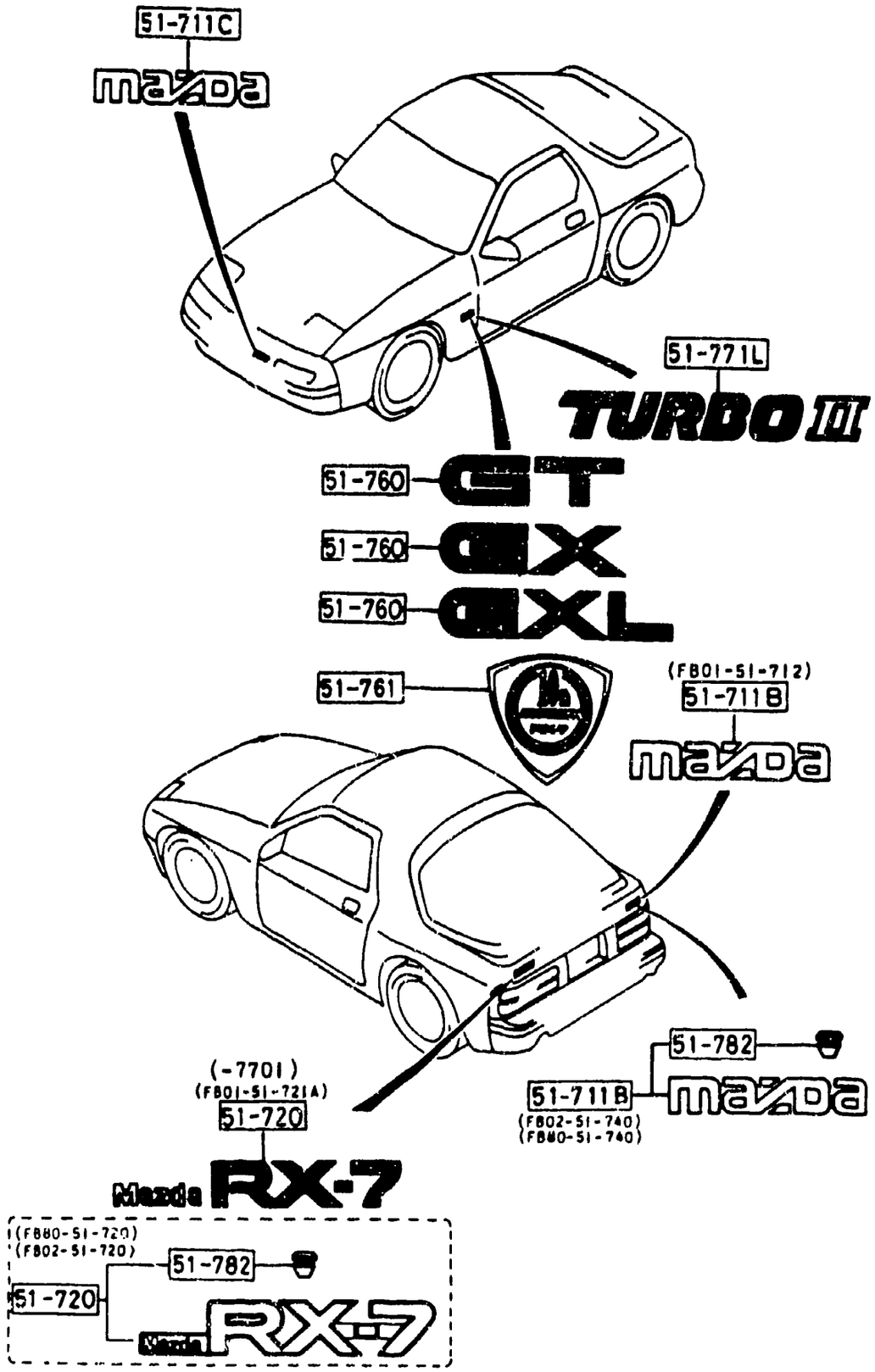

ITEM NO.	D-CODE	DESCRIPTION	PART NO.	QTY	MODEL/DESCRIPTION	REMARKS
	51 711B	ORNAMENT, MANUFACTURER NAME-REAR	FB01-51-712	1	'MAZDA'	-6206
		BLACK	01			
		SILVER	08			
			FB02-51-740	1	'MAZDA'	6206-
	51 711C	ORNAMENT, MANUFACTURER NAME-FRONT	FB01-51-711	1	'MAZDA'	
		BLACK	01			
		SILVER	08			
	51 720	ORNAMENT, CAR NAME-REAR	FB01-51-721A	1	'MAZDA RX-7'	-7701
		DARK GRAY/BLACK	05			
		SILVER	06			
			FB02-51-7200	1		7701-
	51 760	ORNAMENT, GRADE-REAR	FB02-51-761	1	'GX'	7701-
				2	'GX'	-7701
		BLACK	01			
		SILVER	08			
			FB01-51-761	1	'GXL'	7701-
				2	'GXL'	-7701
		BLACK	01			
		SILVER	08			
			F044-51-761	2	'GT'	-6206
		BLACK	01			
		SILVER	08			
	51 771L	ORNAMENT, TURBO-SIDE	FB51-51-761	2	'TURBO II'	-7701
				1		7701-
		SILVER	08			
		RED	10			
	51 782	CLIP, TUBULAR	H001-51-782	7		

6206 FC33* -130380
7701 FC33* -550169

(CPE) (THIS ILLUSTRATION CONSISTS OF 2 PAGES)

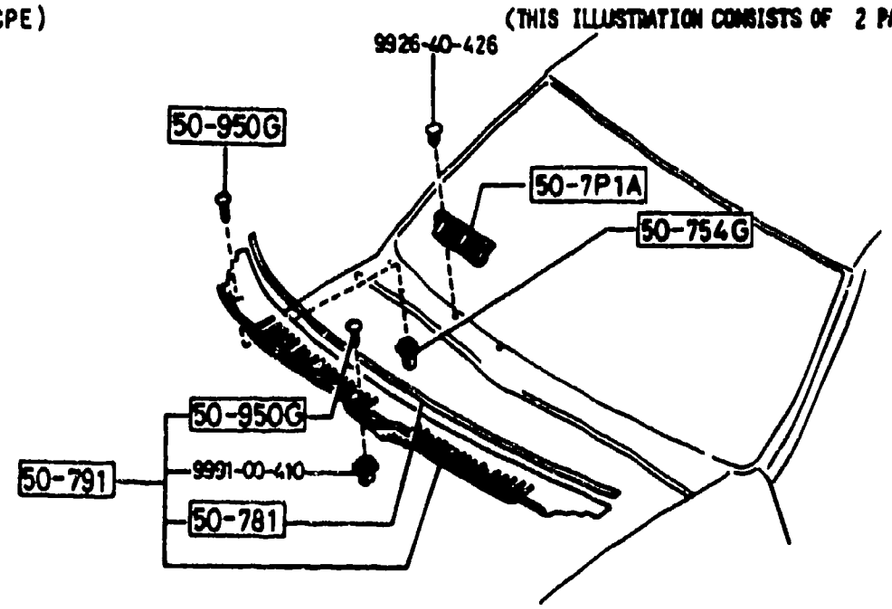

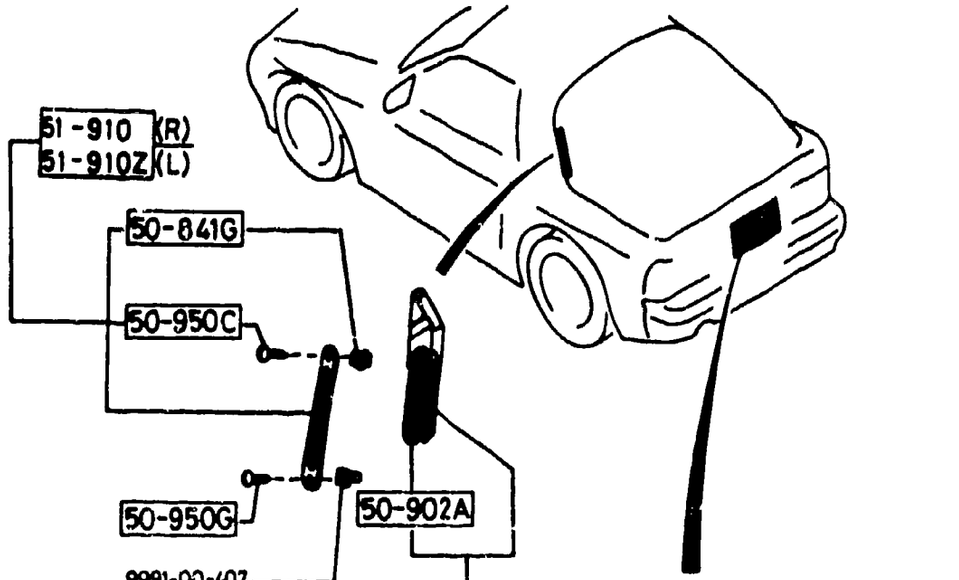

(CONVERTIBLE) (THIS ILLUSTRATION CONSISTS OF 2 PAGES)

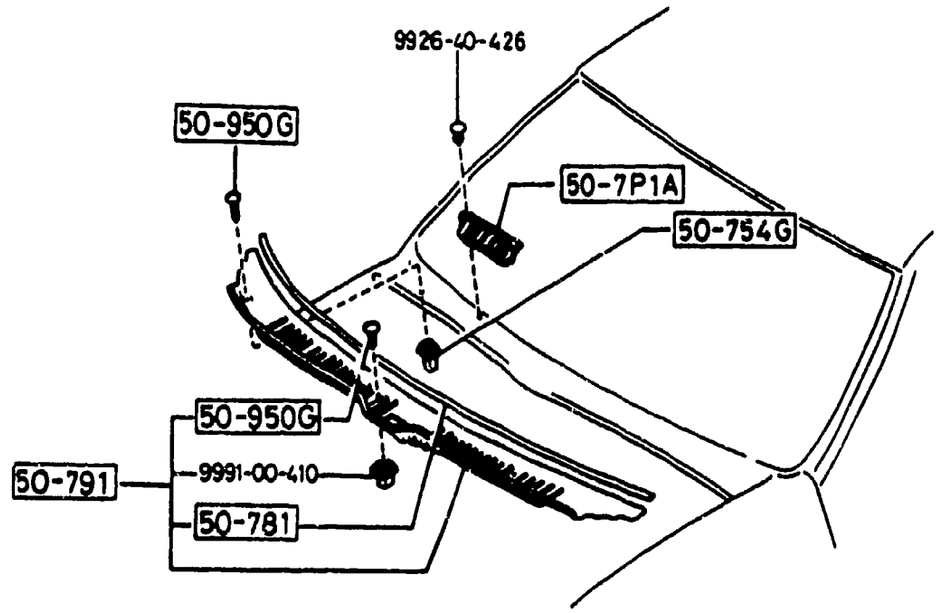

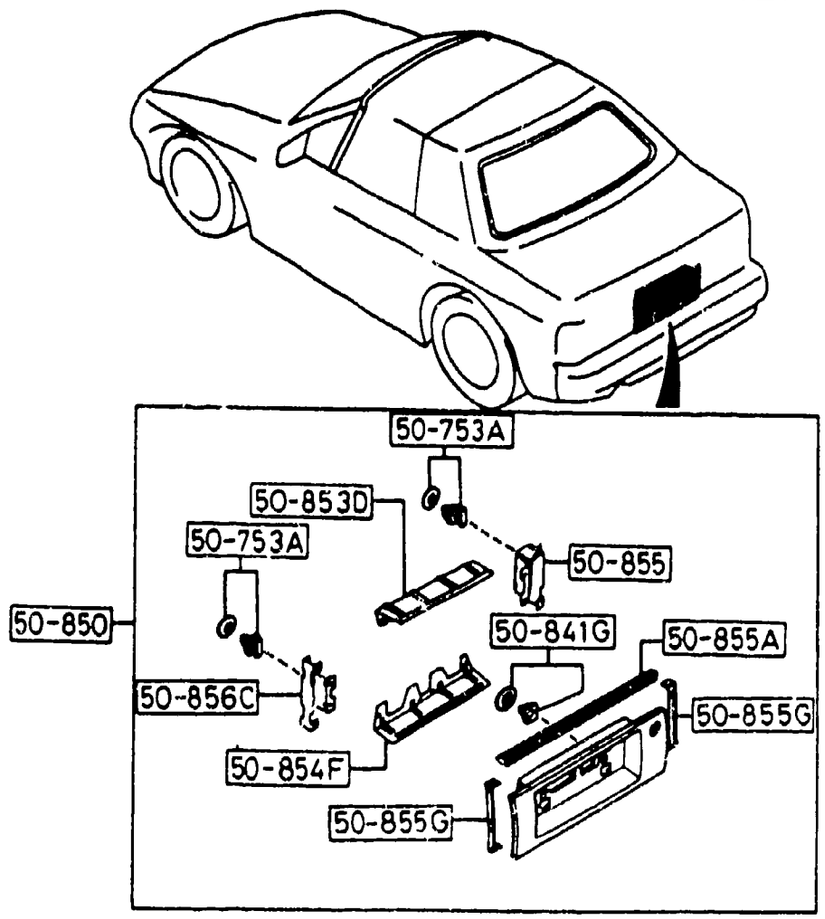

5180-2 COWL & EXTRACTOR GILLES

SEE ILLUSTRATION/S AT FRAME 2 - I 4

ITEM NO.	D-CODE	DESCRIPTION	PART NO.	QTY	MODEL/DESCRIPTION	REMARKS
	50 753A	FASTENER	G043-50-753	4	CONV.	
	50 754G	GROMMET, SCREW	FB01-50-818	4		
	50 781	PROTECTOR, COWL GRILLE	FB01-50-792	1		
	50 791	GRILLE, COWL	FB01-50-790B	1		
	50 7P1A	GRILLE (R), COWL-LOWER	FB01-50-7P1A	1		
	50 841B	GROMMET, SCREW	FB01-50-841	5	COUPE	-6A09
				3	COUPE	6A09-
	50 841G	GROMMET, SCREW	F044-51-912	2	COUPE	
				3	CONV.	
	50 850	FINISHER, REAR	FB67-50-850A	1	CONV.	
			FB01-50-850C	1	COUPE	
	50 853D	REINFORCEMENT (UPPER), FINISHER-REAR	FB01-50-853	1	COUPE	
			FB67-50-853	1	CONV.	
	50 854F	REINFORCEMENT (LOWER), FINISHER-REAR	FB01-50-854	1	COUPE	
			FB67-50-854	1	CONV	
	50 855	BRACKET NO. 1, FINISHER-REAR	FB67-50-855	1	CONV	
	50 855A	PROTECTOR, REAR FINISHER	FB01-50-852A	1	COUPE	
			FB67-50-852	1	CONV	
	50 855G	PROTECTOR, REAR FINISHER	FB67-50-857	2	CONV	
	50 856C	BRACKET NO. 2, FINISHER-REAR	FB67-50-856	1	CONV	
	50 902A	PLATE	FB01-51-922	2	COUPE	
	50 950C	SCREW	F044-51-890A	2	COUPE	
	50 950G	SCREW, COWL GRILLE	FB01-50-795A	6	CONV	
				8	COUPE	
	50 9V2	GROMMET, SCREW	B250-50-9V2	2	COUPE	
	51 910	GRILLE (R), EXTRACTOR	F044-51-910A	1	COUPE	
	51 910Z	GRILLE (L), EXTRACTOR	F044-51-930A	1	COUPE	
	51 9408	CHAMBER (R), EXTRACTOR	FB01-51-920A	1	COUPE	
	51 940X	CHAMBER (L), EXTRACTOR	FB01-51-940A	1	COUPE	

6A09 FC33* -519048

5230-1 HOOD

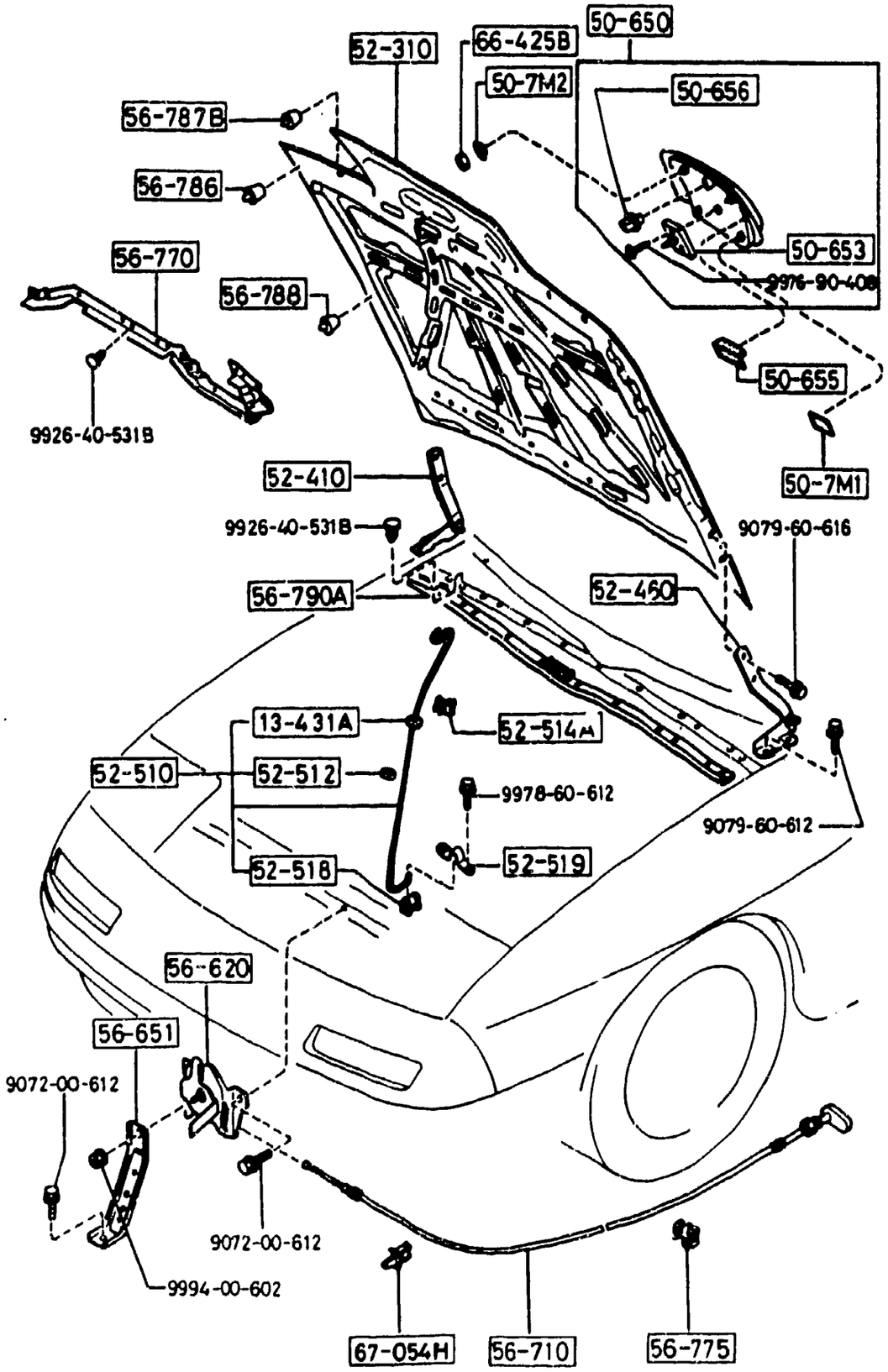

ITEM NO.	D-CODE	DESCRIPTION	PART NO.	QTY	MODEL/DESCRIPTION	REMARKS
	13 431A	WASHER, RUBBER	0118-13-431	1		7501-
	50 650	SCOOP, HOOD	F044-50-650B	1	TURBO	
	50 653	BRACKET, HOOD	F044-50-653A	1	TURBO	
	50 655	PROTECTOR, HOOD	F044-50-655B	4	TURBO	
	50 656	FASTENER, HOOD	F044-50-656A	1	TURBO	
	50 7M1	PROTECTOR, HOOD	F044-50-7M1	2	TURBO	
	50 7M2	WASHER, HOOD	F044-50-7M2	5	TURBO	
	52 310	HOOD	FB01-52-310H	1	STEEL, W/O TURBO	
		REFER TO PARTS BULL. NO. T-3-7 FOR MORE INFO.				
			FB13-52-310J	1	ALUM., W/O TURBO	
			F049-52-310N	1	ALUM., TURBO	
	52 410	HINGE (R), HOOD	FB13-52-410E	1		
	52 460	HINGE (L), HOOD	FB13-52-420E	1		
	52 510	STAY, HOOD	FB01-52-510D	1		
	52 512	SPACER, HOOD STAY	FB01-52-512	1		
	52 514A	HOLDER, HOOD STAY-SHROUD	FB67-52-514	1	CONV	
			FB01-52-514B	1	COUPE	
	52 518	HOLDER, HOOD STAY	FB01-52-518	1		
	52 519	PLATE, SET-HOLDER	FB01-52-519A	1		
	56 620	LOCK, HOOD	FB01-56-620E	1	W/O BURGLAR ALARM STEEL HOOD	
			FB02-56-620F	1	W/ BURGLAR ALARM STEEL HOOD	
			FB13-56-620C	1	W/O BURGLAR ALARM ALUM. HOOD	
			FB15-56-620F	1	W/ BURGLAR ALARM ALUM. HOOD	
	56 651	STAY, LOCK-HOOD	FB01-56-651	1		
	56 710	WIRE, RELEASE-HOOD	FB01-56-710C	1		
	56 770	RUBBER (C), SEAL-HOOD-FRONT	FB01-56-770A	1		
	56 775	CLIP, WIRE-BONNET	FB01-56-775B	4		-6701
				3		6701-
	56 786	RUBBER (C), CUSHION-HOOD	FB01-56-786A	2		
	56 787B	RUBBER, CUSHION-HOOD-FRONT	FB01-56-787A	2		
	56 788	RUBBER, CUSHION-HOOD-REAR	FB01-56-788	2		
	56 790A	RUBBER, SEAL-COWL PANEL	FB67-56-740	2	CONV.	
			FB01-56-780D	1	COUPE	
	66 425B	NUT, HOOD	F044-50-425	5	TURBO	
	67 054H	CLIP, OPENER CABLE	B130-56-897	1		

6701 FC33* -500010
7501 FC33* -547831

5260-1 TRUNK LID (CONVERTIBLE)

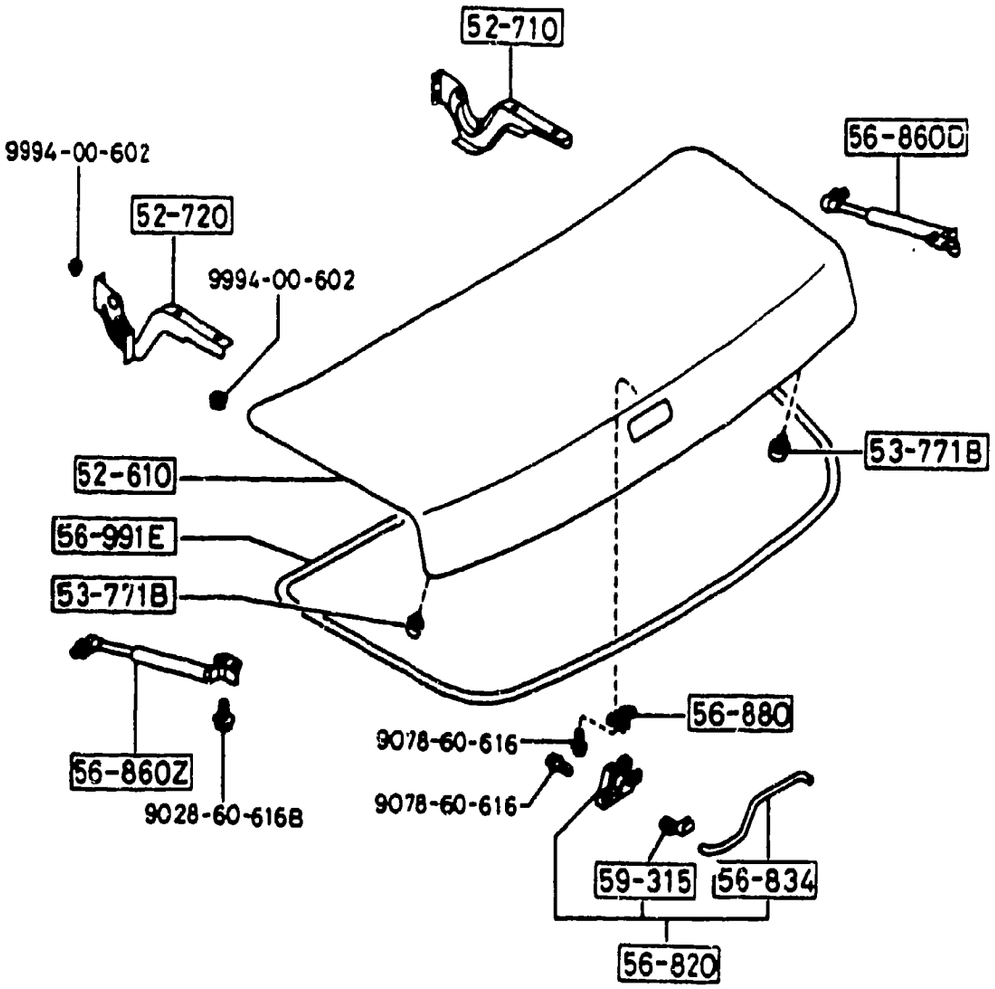

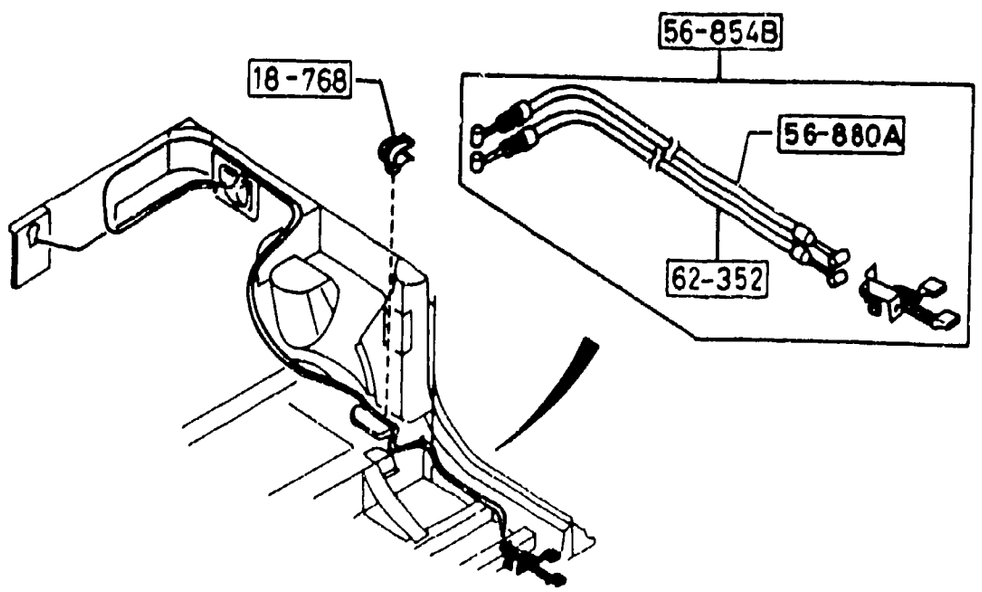

ITEM NO.	D-CODE	DESCRIPTION	PART NO.	QTY	MODEL/DESCRIPTION	REMARKS
	18 768	CLIP	E301-18-768	1		
	52 610	LID, TRUNK	FB67-52-610A	1		
	52 710	HINGE (R), TRUNK LID	FB67-52-710A	1		
	52 720	HINGE (L), TRUNK LID	FB67-52-720A	1		
	53 771B	RUBBER, CUSHION	FB67-56-802	2		
	56 820	LOCK, LID	FB67-56-820	1		
	56 834	ROD, TRUNK OPENING	FB67-56-835	1		
	56 854B	OPENER, TRUNK LID & FUEL LID	FB67-56-920D	1		
	56 860D	STAY (R), DAMPER-TRUNK LID	BBF1-56-860	1		
	56 860Z	STAY (L), DAMPER-TRUNK LID	BBF1-56-870	1		
	56 880	STRIKER, LID	FB67-56-840	1		
	56 991E	WEATHERSTRIP, LID	FB67-56-952	1		
	59 315	CLIP	G030-59-315	1		
	62 352	CABLE, OPENER	FB67-56-930D	1		

5310-1 BODY PANELS (FRONT) (COUPE)

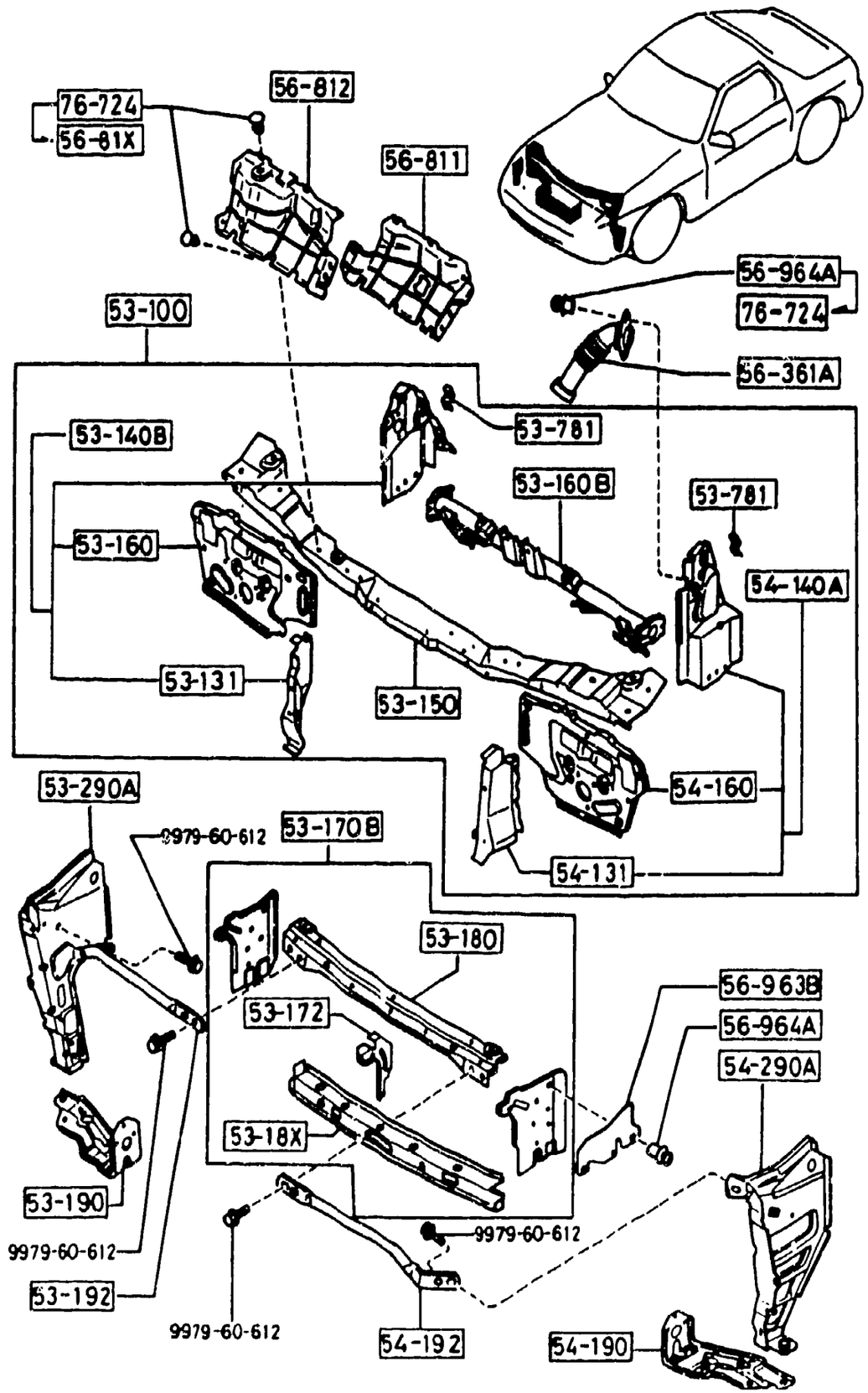

ITEM NO.	D-CODE	DESCRIPTION	PART NO	QTY	MODEL/DESCRIPTION	REMARKS
	53 100	PANEL, RADIATOR	FB01-53-100N	1		
	53 131	REINFORCEMENT (R), RADIATOR	FB01-53-131A	1		
	53 140B	PANEL (R), SHROUD-SIDE	FB01-53-12XB	1		6201-
	53 150	PLATE, SHROUD-UPPER	FB01-53-150D	1		
	53 160	PANEL (R), SHROUD	FB01-53-120C	1		
	53 160B	MEMBER, CROSS	FB01-53-160	1		
	53 170B	PLATE, SET-FASCIA	FB01-53-170K	1		
	53 172	STAY, SET PLATE-FASCIA	FB01-53-172	1		
	53 180	PLATE (UP.), SET-FASCIA	FB01-53-180C	1		
	53 18X	BRACKET, RELAY-SET PLATE	FB01-53-18XA	1		
	53 190	STAY (R), FENDER-LOWER	FB01-53-190	1		
	53 192	STAY (R), FENDER-UPPER	FB01-53-192	1		
	53 290A	BRACKET (R), FENDER	FB01-53-110A	1		
	53 781	BRACKET, GRILLE	0305-53-781A	2		
	54 131	REINFORCEMENT (L), RADIATOR SHROUD	FB01-54-131A	1		
	54 140A	PANEL (L), SHROUD-SIDE	FB01-54-12XE	1		
	54 160	PANEL (L), SHROUD	FB01-54-120D	1		
	54 190	STAY (L), FENDER-LOWER	FC01-54-190	1		
	54 192	STAY (L), FENDER-UPPER	FB01-54-192	1		
	54 290A	BRACKET (L), FENDER	FB01-54-110B	1		
	56 361A	DUCT, AIR-RADIATOR SHROUD	FB01-56-361A	1		
	56 811	PANEL (L), DUCT-RADIATOR SHROUD	FC01-56-811	1		
	56 812	PANEL (R), DUCT-RADIATOR SHROUD	FB01-56-812	1		
	56 81X	FASTENER, DUCT PANEL	FB01-56-81X	10		-6301
	56 963B	PLATE, SEAL-RADIATOR SHROUD	FB01-56-963	1		
	56 964A	RIVET, SEAL PLATE-SHROUD	FB01-56-964	3		
				2		-7501
	76 724	RIVET	8092-51-833	10		-6301
				2		-7501

6201 FC33* -129445
6301 FC33* -134718
7501 FC33* -547831

5310A-1 BODY PANELS (FRONT) (CONVERTIBLE)

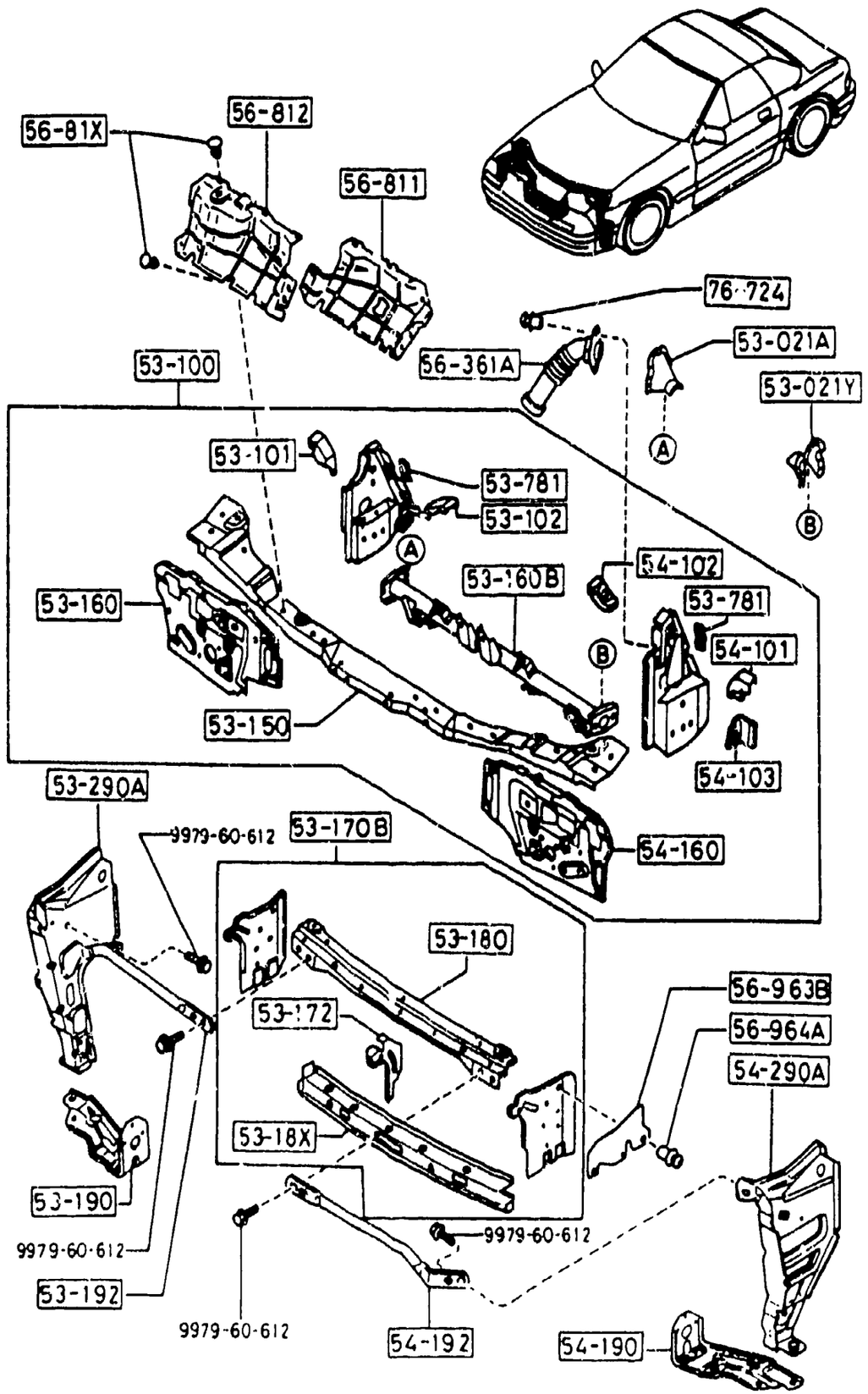

ITEM NO.	D-CODE	DESCRIPTION	PART NO	QTY	MODEL/DESCRIPTION	REMARKS
	53 021A	GUSSET (R), CROSS MEMBER NO. 1	FB67-53-021	1		
	53 021Y	GUSSET (L), CROSS MEMBER NO. 1	FB67-54-021	1		
	53 100	PANEL, RADIATOR SHROUD	FB67-53-100C	1		
	53 101	REINFORCEMENT 'A' (R), RADIATOR SHROUD	FB67-53-101	1		
	53 102	REINFORCEMENT 'B' (R), RADIATOR SHROUD	FB67-53-102	1		
	53 150	PLATE, SHROUD-UPPER	FB67-53-150	1		
	53 160	PANEL (R), SHROUD	FB67-53-12XC	1		
	53 160B	MEMBER, CROSS	FB67-53-160	1		
	53 170B	PLATE, SET-FASCIA	FB67-53-170B	1		
	53 172	STAY, SET PLATE-FASCIA	FB01-53-172	1		
	53 180	PLATE (UP.), SET-FASCIA	FC66-53-180	1		
	53 18X	BRACKET, RELAY-SET PLATE	FB01-53-18XA	1		
	53 190	STAY (R), FENDER-LOWER	FC01-53-190	1		
	53 192	STAY (R), FENDER-UPPER	FB01-53-192	1		
	53 290A	BRACKET (R), FENDER	FB01-53-110A	1		
	53 781	BRACKET, GRILLE	0305-53-781A	2		
	54 101	REINFORCEMENT 'A' (L), RADIATOR SHROUD	FB67-54-101	1		
	54 102	REINFORCEMENT 'B' (L), RADIATOR	FB67-54-102	1		
	54 103	REINFORCEMENT 'C' (L), RADIATOR	FB67-54-103	1		
	54 160	PANEL (L), SHROUD	FB67-54-12XC	1		
	54 190	STAY (L), FENDER-LOWER	FB01-54-190	1		
	54 192	STAY (L), FENDER-UPPER	FB01-54-192	1		
	54 290A	BRACKET (L), FENDER	FB01-54-110B	1		
	56 361A	DUCT, AIR-RADIATOR SHROUD	FB01-56-361A	1		
	56 811	PANEL (L), DUCT-RADIATOR SHROUD	FC01-56-811	1		
	56 812	PANEL (R), DUCT-RADIATOR SHROUD	FB01-56-812	1		
	56 81X	FASTENER, DUCT PANEL	FB01-56-81X	10		
	56 963B	PLATE, SEAL RADIATOR SHROUD	FB01-56-963	1		
	56 964A	RIVET, SEAL PLATE-SHROUD	FB01-56-964	3		
	76 724	RIVET	B092-51-833	2		

SECTION INDEX -- BODY

STARTING LOCATION	SECT NO	SECTION NAME
2 · C 3	0900A	KEY SETS
2 · E 3	5000	FRONT BUMPER
2 · F 3	5005	RADIATOR GRILLE
2 · G 3	5010A	REAR BUMPER
2 · H 3	5030A	WINDOW MOULDINGS
2 · I 3	5040A	BODY MOULDINGS
2 · J 3	5060A	SIDE PROTECTORS
2 · K 3	5100	HEAD LAMPS
2 · [illegible]	5103	HEAD LAMP RETRACTORS
2 · M 3	5105	FRONT COMBINATION LAMPS
2 · C 4	5110A	REAR COMBINATION LAMPS
2 · E 4	5120	LICENSE LAMPS
2 · F 4	5125	INTERIOR LAMPS
2 · G 4	5130	OVERHEAD CONSOLE (COUPE)
2 · H 4	5170	ORNAMENTS
2 · I 4	5180	COWL & EXTRACTOR GILLES
2 · K 4	5230	HOOD
2 · L 4	5260	TRUNK LID (CONVERTIBLE)
2 · M 4	5310	BODY PANELS (FRONT) (COUPE)
2 · N 4	5310A	BODY PANELS (FRONT) (CONVERTIBLE)
2 · C 5	5320	BODY PANELS (FENDER & WHEEL APRON) (COUPE)
2 · D 5	5320B	BODY PANELS (FENDER & WHEEL APRON) (CONVERTIBLE)
2 · E 5	5330	BODY PANELS (DASH & COWL PANEL)
2 · F 5	5340A	BODY PANELS (SIDE) (COUPE)
2 · H 5	5340AA	BODY PANELS (SIDE) (CONVERTIBLE)
2 · K 5	5360A	BODY PANELS (ROOF) (COUPE)
2 · L 5	5370	BODY PANELS (FLOOR) (COUPE)
2 · M 5	5370A	BODY PANELS (FLOOR) (CONVERTIBLE)
2 · C 6	5390	FLOOR ATTACHMENTS (COUPE)
2 · E 6	5390A	FLOOR ATTACHMENTS (CONVERTIBLE)
2 · G 6	5500	DASHBOARD EQUIPMENTS (COUPE) (W O ANTI-LOCK BRAKE SYSTEM)
2 · I 6	5500A	DASHBOARD EQUIPMENTS (COUPE) (ANTI-LOCK BRAKE SYSTEM)
2 · J 6	5500B	DASHBOARD EQUIPMENTS (CONVERTIBLE)
2 · K 6	5520	METER HOOD
2 · L 6	5530	SPEEDOMETER CABLE
2 · M 6	5540	METER COMPONENTS (COUPE) (W O ANTI-LOCK BRAKE SYSTEM)
2 · C 7	5540A	METER COMPONENTS (COUPE) (ANTI-LOCK BRAKE SYSTEM)
2 · E 7	5540B	METER COMPONENTS (CONVERTIBLE)
2 · F 7	5560	DASHBOARD & RELATED PARTS
2 · I 7	5570	CONSOLE
2 · K 7	5580	VENTILATOR
2 · C 8	5700A	FRONT SEATS (COUPE)
2 · C 9	5700AA	FRONT SEATS (COUPE) (LEATHER)
2 · C10	5700AB	FRONT SEATS (CONVERTIBLE) (CLOTH)
2 · F10	5700AC	FRONT SEATS (CONVERTIBLE) (LEATHER)
2 · J10	5750A	REAR SEATS (CLOTH)
2 · C11	5750AA	REAR SEATS (LEATHER)
2 · H11	5790A	SEAT BELTS
2 · J11	5800A	FRONT DOORS (COUPE)
2 · K11	5800AA	FRONT DOORS (CONVERTIBLE)
2 · C12	5830A	FRONT DOOR MECHANISMS (COUPE)
2 · H12	5830AA	FRONT DOOR MECHANISMS (CONVERTIBLE)
2 · C13	5840A	FRONT DOOR TRIMS & RELATED PARTS (COUPE)
2 · K13	5840AB	FRONT DOOR TRIMS & RELATED PARTS (CONVERTIBLE)
2 · N13	6100	HEATER
2 · C14	6110	HEATER UNIT COMPONENTS
2 · D14	6115	HEATER CONTROLS COMPONENTS
2 · E14	6120	HEATER BLOWER COMPONENTS
2 · F14	6130	AIR CONDITIONER (W O AIR CONDITIONER)
2 · G14	6132A	CONDENSER PACKAGE
2 · I14	6142A	COMPRESSOR MOUNTING KIT, COMPRESSOR CLUTCH ASSEMBLY & REPAIR PARTS
2 · J14	6152A	EVAPORATOR PACKAGE
2 · K14	6200	LIFT GATE
2 · L14	6230	LIFT GATE MECHANISMS (COUPE)
2 · N14	6300A	WINDOW GLASSES
2 · C15	6330	SUNROOF (COUPE)
2 · E15	6330A	SOFT TOP (CONVERTIBLE)
2 · G15	6600B	SWITCHES & RELAYS (ENGINE) (W O TURBO)
2 · J15	6600BA	SWITCHES & RELAYS (ENGINE) (TURBO)
2 · M15	6610	DASHBOARD SWITCHES (MANUAL OPERATING)
2 · N15	6611	COMBINATION SWITCH
2 · C16	6612	CLUSTER SWITCH
2 · D16	6615	POWER WINDOW SWITCHES
2 · E16	6620	DOOR SWITCH
2 · F16	6630	RELAYS & CPU (BODY)
2 · G16	6635	HORNS
2 · H16	6640	AUTO CRUISE CONTROL SYSTEM
2 · I16	6680	AUDIO SYSTEMS (RADIO & TAPE DECK)

5320-1 BODY PANELS (FENDER & WHEEL APRON) (COUPE)

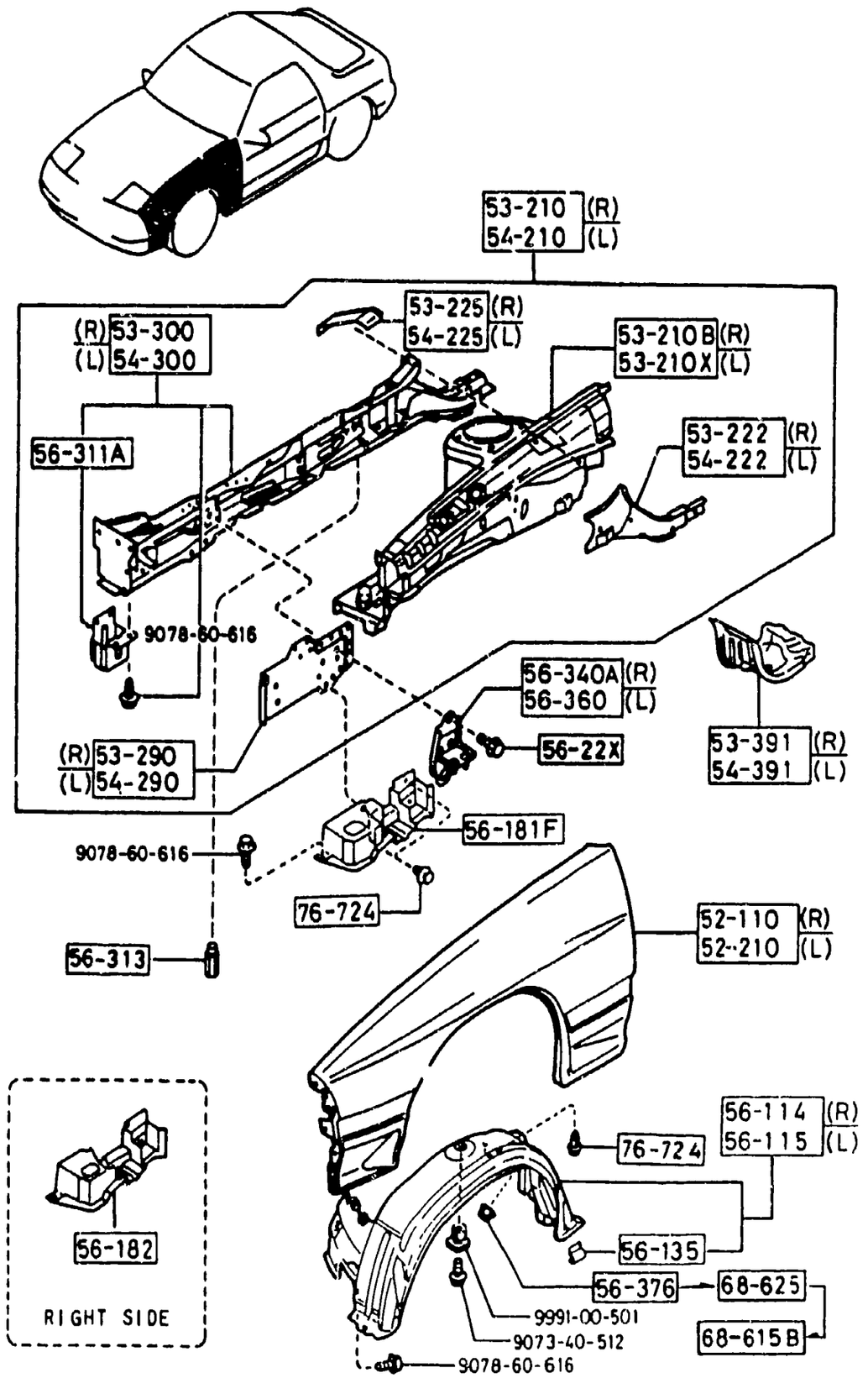

ITEM NO.	D-CODE	DESCRIPTION	PART NO.	QTY	MODEL/DESCRIPTION	REMARKS
	52 110	PANEL (R), FENDER-FRONT	FB01-52-111C	1		
	52 210	PANEL (L), FENDER-FRONT	FB01-52-211B	1		
	53 210	PANEL (R), WHEEL APRON	FB01-53-200D	1	W/O ABS	
			FB34-53-200D	1	W/ ABS	
	53 210B	PANEL (R), WHEEL APRON	FB01-53-210K	1	W/O ABS	
			FB34-53-210D	1	W/ ABS	
	53 210X	PANEL (L), WHEEL APRON	FB01-54-210D	1	W/O ABS	
			F044-54-210E	1	W/ ABS	
	53 222	PLATE (RR., R), CLOSING	FB01-53-250A	1		
	53 225	REINFORCEMENT (R), ABS-APRON	FB34-53-225	1		
	53 290	PLATE (FRT., R), CLOSING	FC66-53-240C	1		
	53 300	FRAME (R), SIDE-FRONT	FC01-53-310	1		
	53 391	BOX (R), TORQUE	FB01-53-391A	1		
	54 210	PANEL (L), WHEEL APRON	FB01-54-200J	1	W/O ABS	
			F044-54-200	1	W/ ABS	
	54 222	PLATE (RR., L), CLOSING	FB01-54-250A	1		
	54 225	REINFORCEMENT (L), ABS-APRON	F044-54-225	1		
	54 290	PLATE (FRT., L), CLOSING	FB01-54-240A	1		
	54 300	FRAME (L), SIDE-FRONT	FB01-54-310J	1		
	54 391	BOX (L), TORQUE	FB01-54-391A	1		
	56 114	GUARD (R), MUD	FC01-56-130	1		
	56 115	GUARD (L), MUD	FC01-56-140	1		
	56 135	RUBBER, STOP	8173-56-135	10		
	56 181F	PLATE (L), SEAL-CLOSING	FB01-56-181A	1		
	56 182	PLATE (R), SEAL-CLOSING	FB01-56-182A	1		
	56 22X	BOLT, TIE DOWN HOOK-FRONT	FB01-56-22X	6		
	56 311A	ADAPTER, TOOLING-FRAME	FB01-56-311	2	W/ AERO PARTS KIT	
	56 313	BOLT, SIDE FRAME-FRONT	FB01-56-313	2		
	56 340A	HOOK (R), TIE DOWN-FRONT	FB01-56-221A	1	W/O AERO PARTS KIT	
			FB34-56-220A	1	W/ AERO PARTS KIT	
	56 360	HOOK (L), TIE DOWN-FRONT	FB01-56-231A	1	W/O AERO PARTS KIT	
			FB34-56-230A	1	W/ AERO PARTS KIT	
	56 376	NUT, SELF LOCK	B001-56-376	2		
	68 615B	NUT, FLNGE-CAP	B100-68-615	2		
	68 625	NUT, CAP	B001-68-625	2		
	76 724	RIVET	B092-51-833	6		

5320B-1 BODY PANELS (FENDER & WHEEL APRON) (CONVERTIBLE)

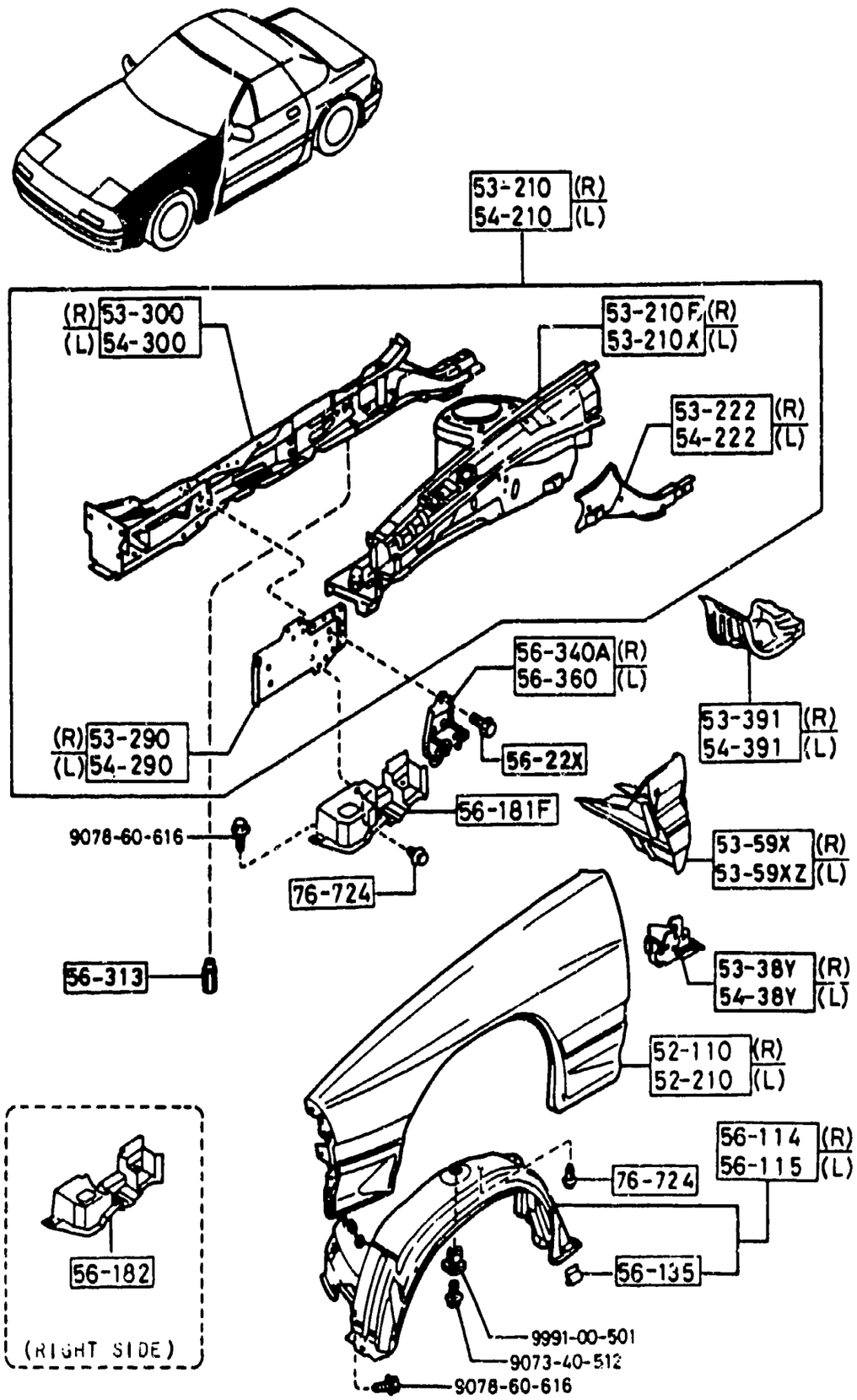

ITEM NO.	D-CODE	DESCRIPTION	PART NO.	QTY	MODEL/DESCRIPTION	REMARKS
	52 110	PANEL (R), FENDER-FRONT	FB01-52-111C	1		
	52 210	PANEL (L), FENDER-FRONT	FB01-52-211B	1		
	53 210	PANEL (R), WHEEL APRON	FB67-53-200C	1		
	53 210B	PANEL (R), WHEEL APRON	FB67-53-210C	1		
	53 210X	PANEL (L), WHEEL APRON	FB67-54-210G	1		
	53 222	PLATE (RR., R), CLOSING	FB01-53-250A	1		
	53 290	PLATE (FRT., R), CLOSING	FC66-53-240	1		
	53 300	FRAME (R), SIDE-FRONT	FB67-53-310B	1		
	53 391	BOX (R), TORQUE	FB67-53-391A	1		
	53 59X	REINFORCEMENT (R), WHEEL APRON	FB67-53-59XB	1		
	53 59XZ	REINFORCEMENT (L), WHEEL APRON	FB67-54-59XB	1		
	54 210	PANEL (L), WHEEL APRON	FC33-54-200	1		
	54 222	PLATE (RR., L), CLOSING	FB01-54-250A	1		
	54 290	PLATE (FRT., L), CLOSING	FB01-54-240A	1		
	54 300	FRAME (L), SIDE-FRONT	FB67-54-310B	1		
	54 391	BOX (L), TORQUE	FB67-54-391A	1		
	56 114	GUARD (R), MUD	FB67-56-130	1		
	56 115	GUARD (L), MUD	FB67-56-1	1		
	56 135	RUBBER, STOP	8173-56-135	10		
	56 181F	PLATE (L), SEAL-CLOSING	FB01-56-181A	1		
	56 182	PLATE (R), SEAL-CLOSING	FB01-56-182A	1		
	56 22X	BOLT, TIE DOWN HOOK-FRONT	FB01-56-22X	6		
	56 340A	HOOK (R), TIE DOWN-FRONT	FB01-56-221A	1		
	56 360	HOOK (L), TIE DOWN-FRONT	FB01-56-231A	1		
	76 724	RIVET	B092-51-833	6		

5330-1 BODY PANELS (DASH & COWL PANEL)

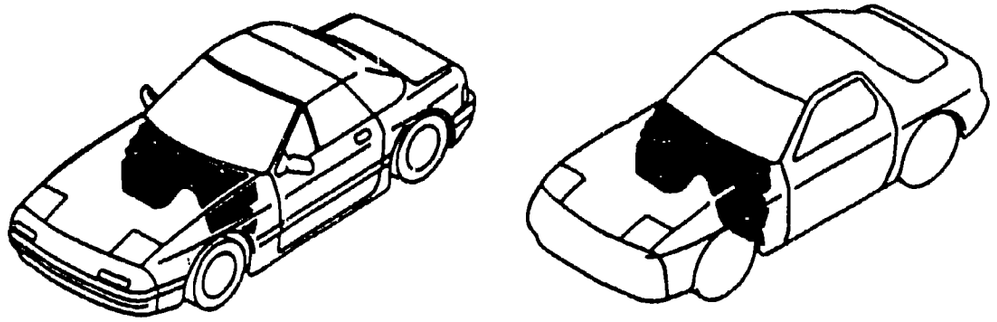

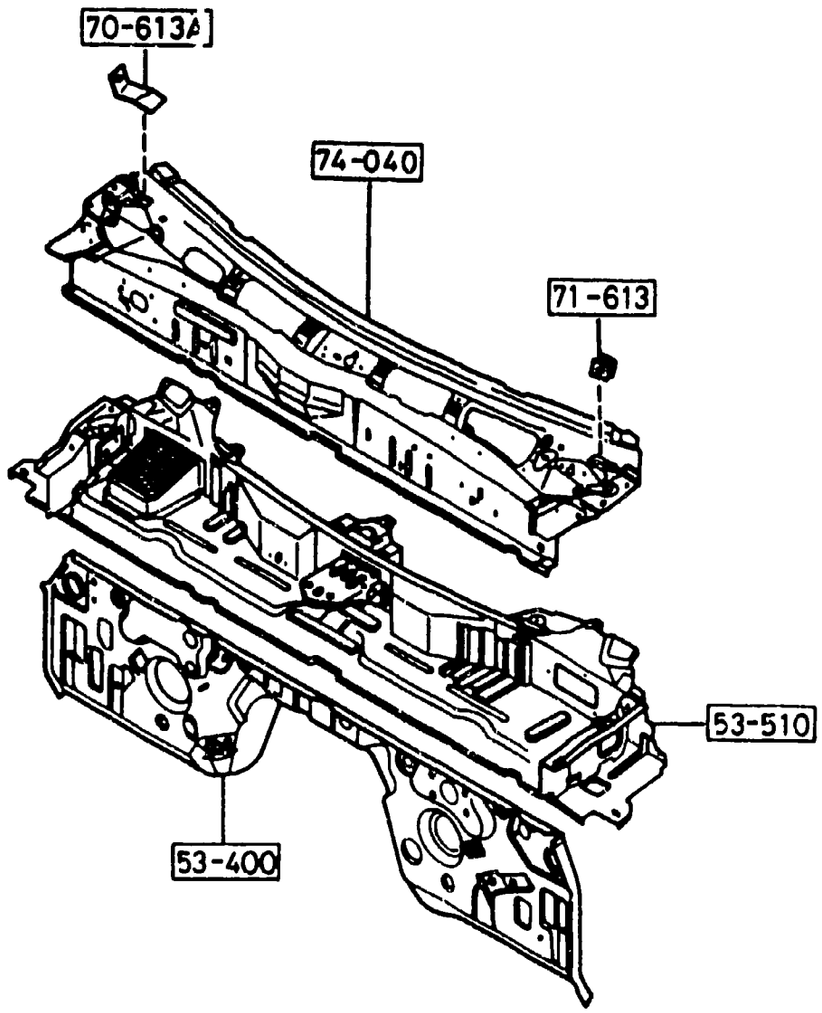

SUPPLEMENTARY EXPLANATION OF MODEL/RESTRICTION IN THE TEXT	
EXPRESSION IN THE TEXT	VEHICLE DISTINCTION
(NOR SUSP)	VEHICLE WITH 4 HOLES DISC WHEEL
(HARD SUSP) ((HARD SUSP) > (W/O A.A.SUSP)) ((HARD SUSP) > (A.A.SUSP))	VEHICLE WITH 5 HOLES DISC WHEEL

ITEM NO.	D-CODE	DESCRIPTION	PART NO.	QTY	MODEL/DESCRIPTION	REMARKS
	53 400	PANEL, DASH-LOWER	FB55-54-400D	1	W/ ABS	
			FB01-54-400H	1	W/O TURBO, NORM. DIFF.	
			FB05-54-400H	1	L/S DIFF.	
			FB67-54-400E	1	CONV.	
	53 510	PANEL, DASH-UPPER	FB01-53-510C	1	COUPE	
			FB67-53-510C	1	CONV.	
	70 613A	BRACKET (R), PILLAR GARNISH	FB01-70-613B	1		
	71 613	BRACKET (L), PILLAR GARNISH	FB01-71-613B	1		
	74 040	PANEL, COWL	FB01-70-610L	1	COUPE	
			FB67-70-610E	1	CONV.	

5340A-1 BODY PANELS (SIDE) (COUPE)

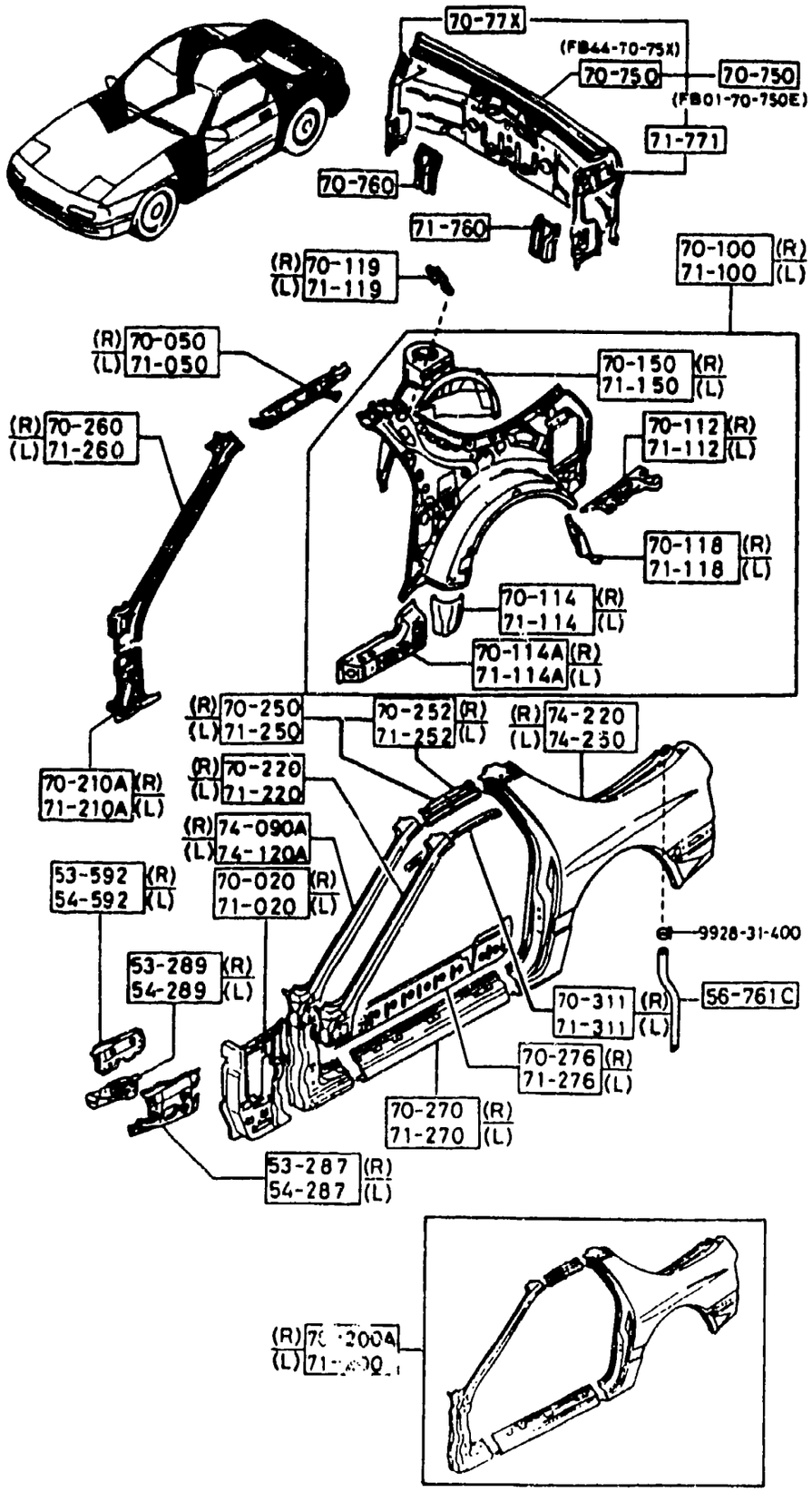

ITEM NO.	D-CODE	DESCRIPTION	PART NO.	QTY	MODEL/DESCRIPTION	REMARKS
	53 287	REINFORCEMENT (R), COWL SIDE PANEL	FB01-53-287A	1		
	53 289	REINFORCEMENT (R), COWL SIDE-INNER	FB01-53-289	1		
	53 592	PLATE (UP., R), COWL SIDE-OUTER	FB01-53-592B	1		
	54 287	REINFORCEMENT (L), COWL SIDE PANEL	FB01-54-287A	1		
	54 289	REINFORCEMENT (L), COWL SIDE-INNER	FB01-54-289	1		
	54 592	PLATE (UP., L), COWL SIDE-OUTER	FB01-54-592B	1		
	56 761C	PIPE, DRAIN-REAR FENDER	F301-56-761	2		
	70 020	PANEL (R), COWL SIDE	FB01-70-210E	1		
	70 050	RAIL (R), ROOF-INNER	FB01-70-050C	1	W/O SUNROOF	
			FB03-70-050C	1	W/ SUNROOF	
	70 100	PANEL (R), QUARTER	FC11-70-100B	1		
	70 112	PANEL (RR., R), QUARTER-LOWER	FB01-70-112A	1		
	70 114	PLATE (R), END	FC01-70-113	1		
	70 114A	JUNCTION (R), CORNER-QUARTER PANEL	FB01-70-114A	1		
	70 118	PROTECTOR (R), SPLASH	FB01-70-118A	1		
	70 119	BRACKET (R), TRIM-QUARTER PANEL	FB01-70-119A	1		
	70 150	PANEL (R), WHEEL HOUSE	FC01-70-150B	1		
	70 200A	FRAME (R), SIDE-OUTER	FBY4-70-200F	1		
	70 210A	PILLAR (R), HINGE	FB01-70-020	1		
	70 220	PILLAR (R, UP.), FRONT-OUTER	FB01-70-220D	1		
	70 250	RAIL (R), ROOF-OUTER	FBY1-70-251	1		
	70 260	PILLAR (R), FRONT-INNER	FC11-70-240	1		
	70 270	PANEL (R), SIDE SILL	FBY1-70-271	1		
		<C>	FBY1-70-271A	1	REQUIRES PLUG: FB03-51-9A1	
	70 276	REINFORCEMENT (R), SIDE SILL	FB01-70-273	1		
	70 311	RAIL (R), RAIN	FB01-70-321A	1		
	70 750	PANEL, REAR END	FC01-70-75X0	1		
	70 760	TOWER (R), LOCK-REAR END PANEL	FB01-70-760C	1		
	70 77X	PANEL (R), QUARTER-REAR END	FB01-70-77X	1		
	71 020	PANEL (L), COWL SIDE	FB01-71-210F	1		
	71 050	RAIL (L), ROOF-INNER	FB01-71-050C	1	W/O SUNROOF	
			FC03-71-050	1	W/ SUNROOF	
	71 100	PANEL (L), QUARTER	FC11-71-100B	1		
	71 112	PANEL (RR, L), QUARTER-LOWER	FB01-71-112D	1		
	71 114	PLATE (L), END	FB01-71-113A	1		

5340A-2 BODY PANELS (SIDE) (COUPE)

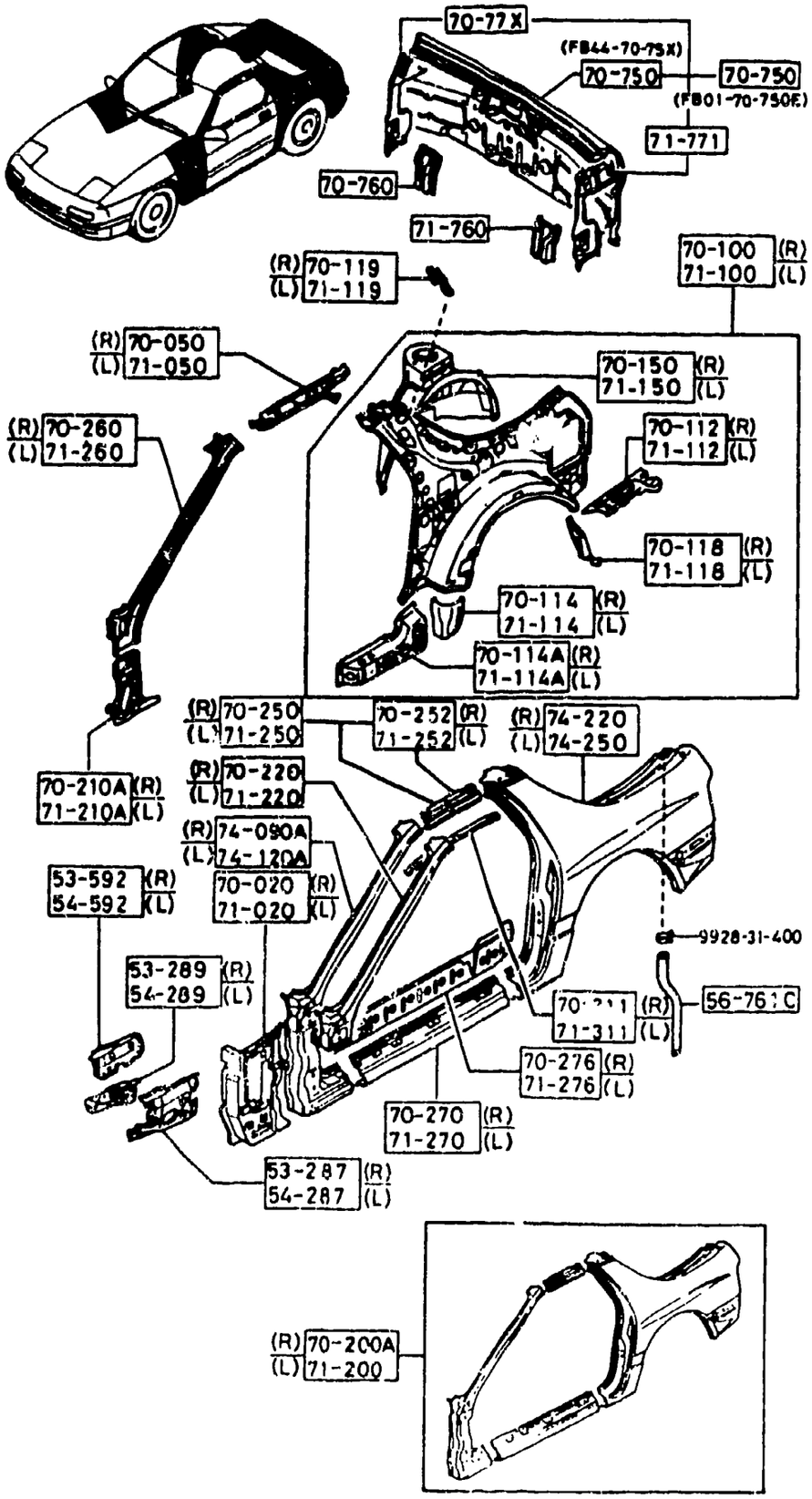

ITEM NO.	D-CODE	DESCRIPTION	PART NO.	QTY	MODEL/DESCRIPTION	REMARKS
	71 114A	JUNCTION (L), CORNER-QUAR'ER PANEL	FB01-71-114A	1		
	71 118	PROTECTOR (L), SPLASH	FB01-71-118A	1		
	71 119	BRACKET (L), TRIM-QUARTER PANEL	FB01-71-119A	1		
	71 150	PANEL (L), WHEEL HOUSE	FC01-71-150A	1		
	71 200	FRAME (L), SIDE-OUTER	FBY4-71-200D	1		
	71 210A	PILLAR (L), HINGE	FB01-71-020	1		
	71 220	PILLAR (L, UP.), FRONT-OUTER	FB01-71-220D	1		
	71 250	RAIL (L), ROOF-OUTER	FBY1-71-251	1		
	71 260	PILLAR (L), FRONT-INNER	FC11-71-240	1		
	71 270	PANEL (L), SIDE SILL	FBY1-71-271	1		
		<C>	FBY1-71-271A	1	REQUIRES PLUG: FB03-51-9A1	
	71 276	REINFORCEMENT (L), SIDE SILL	FB01-71-273	1		
	71 311	RAIL (L), RAIN	FB01-71-321A	1		
	71 760	TOWER (L), LOCK-REAR END PANEL	FB01-71-760B	1		
	71 771	PANEL (L), QUARTER-REAR END	FB01-71-771A	1		
	74 090A	PILLAR (R), FRONT-OUTER	FBY1-70-210C	1		
	74 120A	PILLAR (L), FRONT-OUTER	FBY1-71-210C	1		
	74 220	PANEL (R), FENDER-REAR	FBY4-70-400E	1		
	74 250	PANEL (L), FENDER-REAR	FBY4-71-400C	1		

5340AA-1 BODY PANELS (SIDE) (CONVERTIBLE)

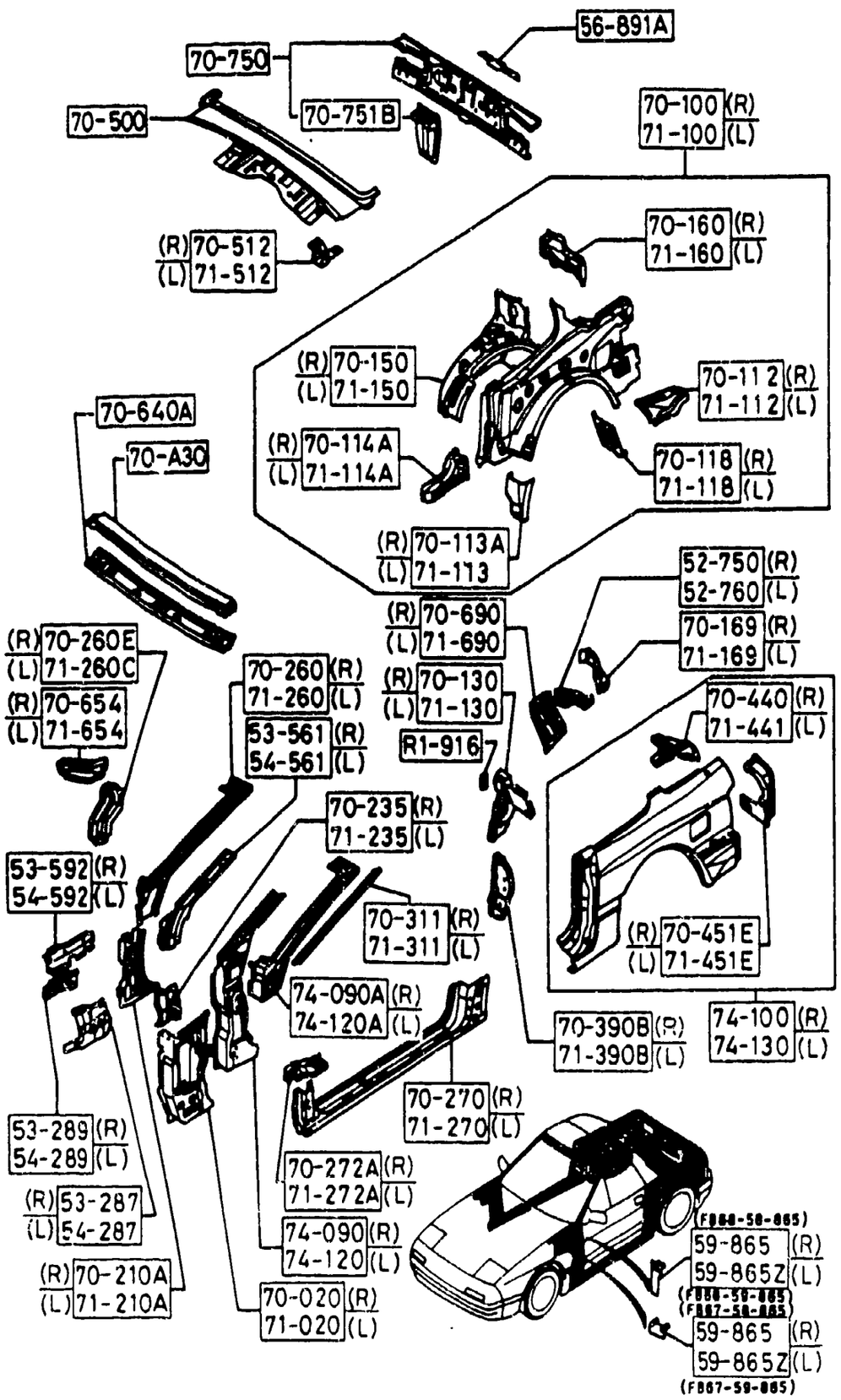

ITEM NO.	D-CODE	DESCRIPTION	PART NO.	QTY	MODEL/DESCRIPTION	REMARKS
	52 750	BRACKET (R), DAMPER STAY-QUARTER	FB67-52-750	1		
	52 760	BRACKET (L), DAMPER STAY-QUARTER	FB67-52-760	1		
	53 287	REINFORCEMENT (R), COWL SIDE PANEL	FB67-53-287	1		
	53 289	REINFORCEMENT (R), COWL SIDE-INNER	FB01-53-289	1		
	53 561	REINFORCEMENT (R), FRONT PILLAR-INNER	FB67-70-246B	1		
	53 592	PLATE (UP., R), COWL SIDE-OUTER	FB67-53-592	1		
	54 287	REINFORCEMENT (L), COWL SIDE PANEL	FB67-54-287	1		
	54 289	REINFORCEMENT (L), COWL SIDE-INNER	FB01-54-289	1		
	54 561	REINFORCEMENT (L), FRONT PILLAR-INNER	FB67-71-246B	1		
	54 592	PLATE (UP., L), COWL SIDE-OUTER	FB67-54-592	1		
	56 891A	REINFORCEMENT LOCK-REAR END PANEL	FB67-56-890	1		
	59 865	VALVE (R), SHUTTER	FB67-58-865	1		
			FB68-58-865	1		
	59 865Z	VALVE (L), SHUTTER	FB67-59-865	1		
			FB68-59-865	1		
	70 020	PANEL (R), COWL SIDE	FB67-70-230C	1		
	70 100	PANEL (R), QUARTER	FB67-70-100G	1		
	70 112	PANEL (RR., R), QUARTER-LOWER	FB01-70-112A	1		
	70 113A	PLATE (R), SEAL	FB67-70-113	1		
	70 114A	JUNCTION (R), CORNER-QUARTER PANEL	FB67-70-114	1		
	70 118	PROTECTOR (R), SPLASH	FB01-70-118A	1		
	70 130	BRACKET (R), FORMING BAR	FB67-70-130D	1		
	70 150	PANEL (R), WHEEL HOUSE	FB67-70-150D	1		
	70 160	PLATE (R), REAR CORNER-INNER	FB67-70-160B	1		
	70 169	REINFORCEMENT (R), QUARTER PANEL-REAR	FB67-70-169A	1		
	70 210A	PILLAR (R), HINGE	FB67-70-020B	1		
	70 235	GUSSET (R), HINGE PILLAR	FB67-53-698	1		
	70 260	PILLAR (R), FRONT-INNER	FB67-70-240A	1		
	70 260E	BRACKET (R), INSTRUMENT	FB67-70-260	1		
	70 270	PANEL (R), SIDE SILL	FB67-70-270B	1		
	70 272A	PLATE (R), FIXING-SIDE SILL	FB67-70-272	1		
	70 311	RAIL (R), RAIN	FB67-70-222A	1		
	70 390B	REINFORCEMENT (R), STRIKER	FB67-70-420	1		

5340AA-2 BODY PANELS (SIDE) (CONVERTIBLE)

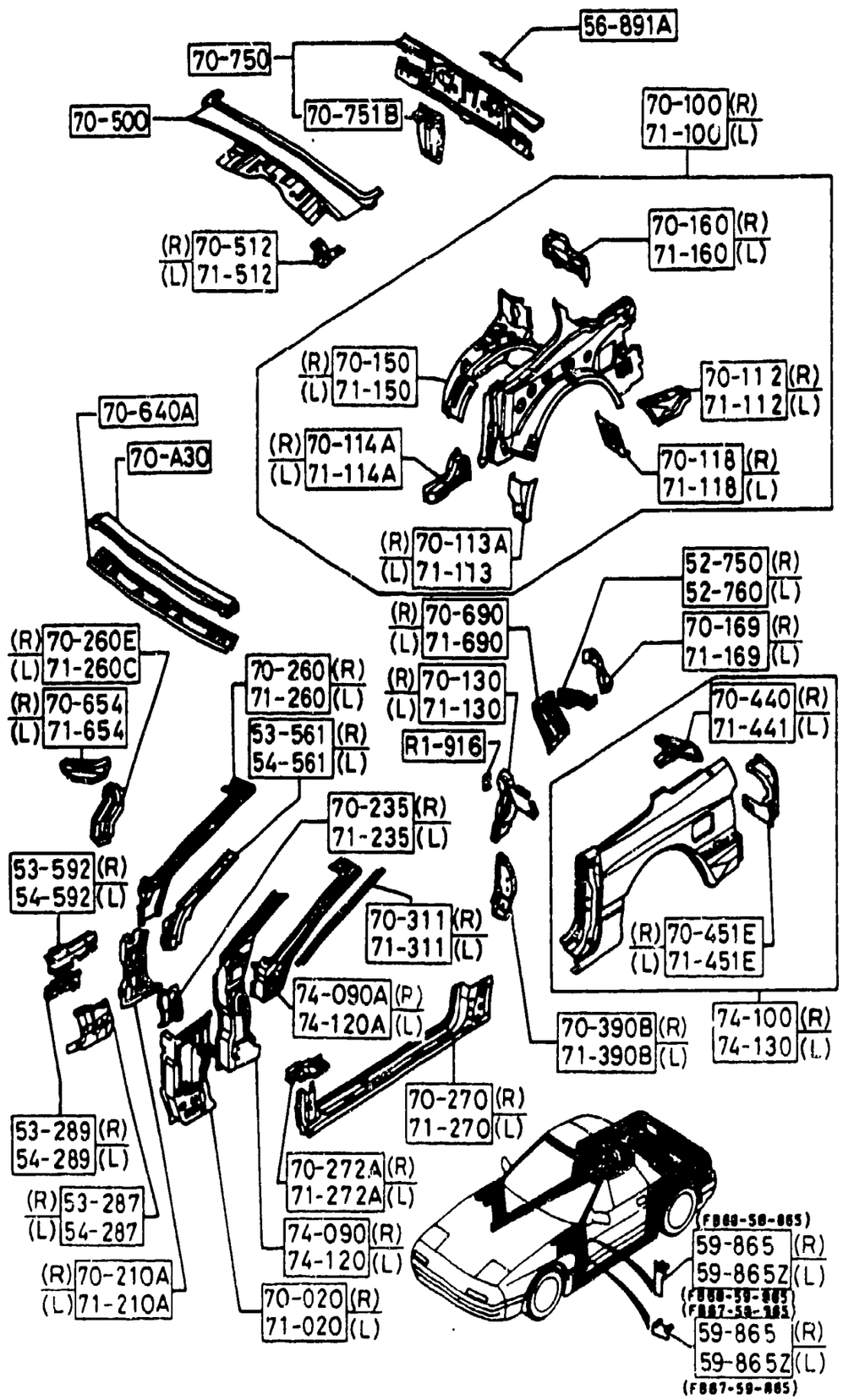

ITEM NO.	D-CODE	DESCRIPTION	PART NO.	QTY	MODEL/DESCRIPTION	REMARKS
	70 440	PLATE (R), CORNER	FB67-70-441A	1		
	70 451E	HOUSING (R), LAMP-REAR FENDER	FB67-70-491A	1		
	70 500	TRAY, PACKAGE	FB67-70-500D	1		
	70 512	BRACKET (R), TRIM-QUARTER PANEL	FB67-70-512	1		
	70 640A	HEADER, FRONT-INNER	FB67-70-640A	1		
	70 654	GUSSET (L), INSTRUNENT PANEL-DASH	FB67-70-654	1		
	70 690	GUSSET (R), WHEEL HOUSE	FB67-70-690A	1		
	70 750	PANEL, REAR END	FB67-70-750C	1		
	70 751B	MEMBER, REAR END	FB67-70-752	1		
	70 A30	HEADER, FRONT-OUTER	FB67-70-631B	1		
	71 020	PANEL (L), COWL SIDE	FB67-71-230C	1		
	71 100	PANEL (L), QUARTER	FC33-71-100A	1		
	71 112	PANEL (RR., L), QUARTER-LOWER	FB01-71-112D	1		
	71 113	PLATE (L), SEAL	FB67-71-113	1		
	71 114A	JUNCTION (L), CORNER-QUARTER PANEL	FB67-71-114	1		
	71 118	PROTECTOR (L), SPLASH	FB01-71-118A	1		
	71 130	BRACKET (L), FORMING BAR	FB67-71-130D	1		
	71 150	PANEL (L), WHEEL HOUSE	FB67-71-150B	1		
	71 160	PLATE (L), REAR CORNER-INNER	FB67-71-160B	1		
	71 169	REINFORCEMENT (L), QUARTER PANEL-REAR	FB67-71-169A	1		
	71 210A	PILLAR (L), HINGE	FB67-71-020B	1		
	71 235	GUSSET (L), HINGE PILLAR	FB67-54-698	1		
	71 260	PILLAR (L), FRONT-INNER	FB67-71-240A	1		
	71 260C	BRACKET (L), INSTRUMENT	FB67-71-260	1		
	71 270	PANEL (L), SIDE SILL	FB67-71-270B	1		
	71 272A	PLATE (L), FIXING-SIDE SILL	FB67-71-272	1		
	71 311	RAIL (L), RAIN	FB67-71-222A	1		
	71 390B	REINFORCEMENT (L), STRIKER	FB67-71-420	1		
	71 441	PLATE (L), CORNER	FB67-71-441A	1		
	71 451E	HOUSING (L), LAMP-REAR FENDER	FB67-71-491A	1		
	71 512	BRACKET (L), TRIM-QUARTER PANEL	FB67-71-512	1		
	71 654	GUSSET (L), INSTRUMENT PANEL-DASH	FB67-71-654	1		
	71 690	GUSSET (L), WHEEL HOUSE	FB67-71-690A	1		
	74 090	PILLAR (R), HINGE-OUTER	FB67-70-210A	1		
	74 090A	PILLAR (R), FRONT-OUTER	FB67-70-220B	1		
	74 100	PANEL (R), FENDER-REAR	FC33-70-400	1		

5340AA-3 BODY PANELS (SIDE) (CONVERTIBLE)

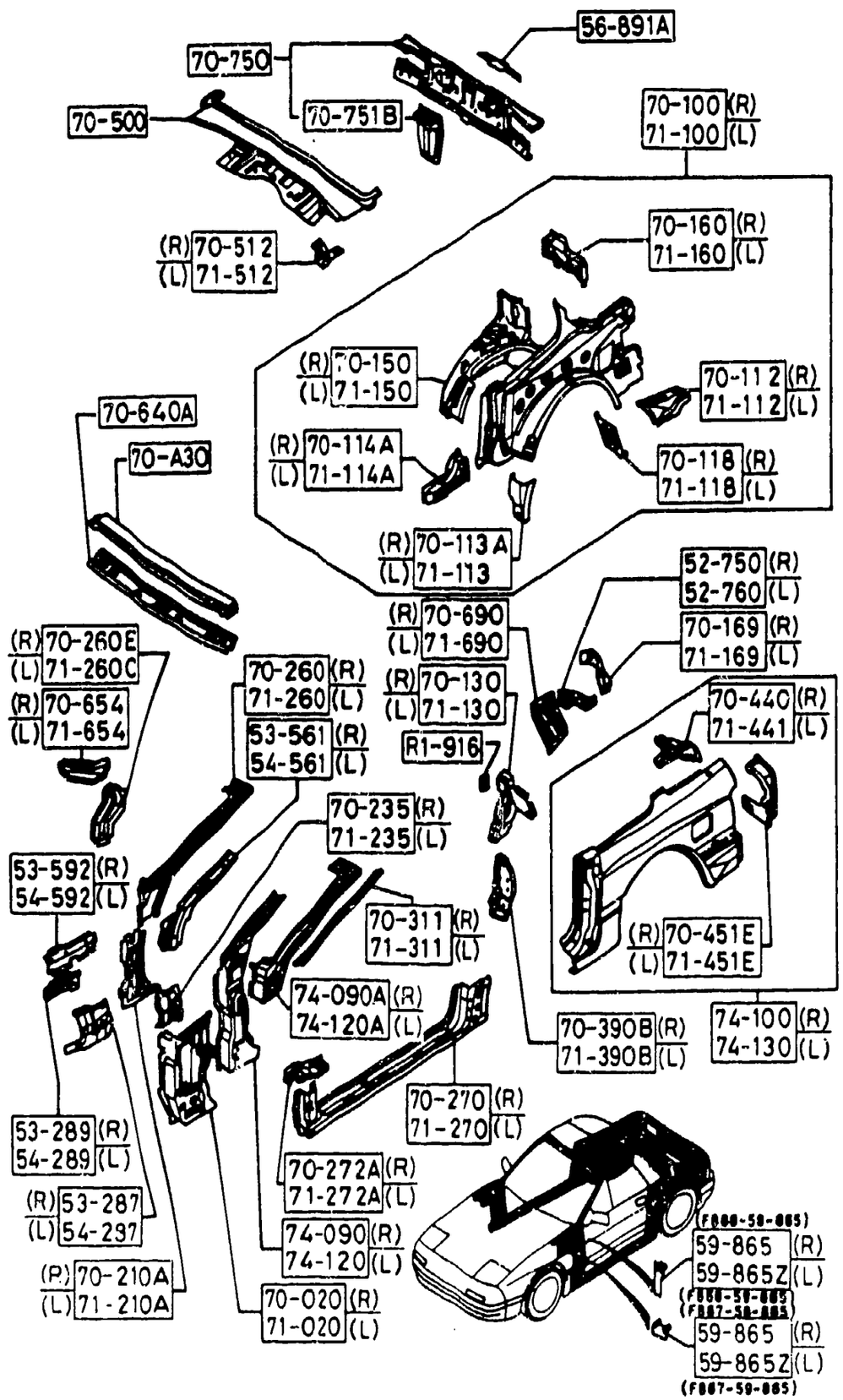

ITEM NO.	D-CODE	DESCRIPTION	PART NO.	QTY	MODEL/DESCRIPTION	REMARKS
	74 120	PILLAR (L), HINGE-OUTER	FB67-71-210A	1		
	74 120A	PILLAR (L), FRONT-OUTER	FB67-71-220B	1		
	74 130	PANEL (L), FENDER-REAR	FB67-71-400G	1		
	R1 916	PLATE, SET-HINGE BRACKET	FB67-R1-916	2		

5360A-1 BODY PANELS (ROOF) (COUPE)

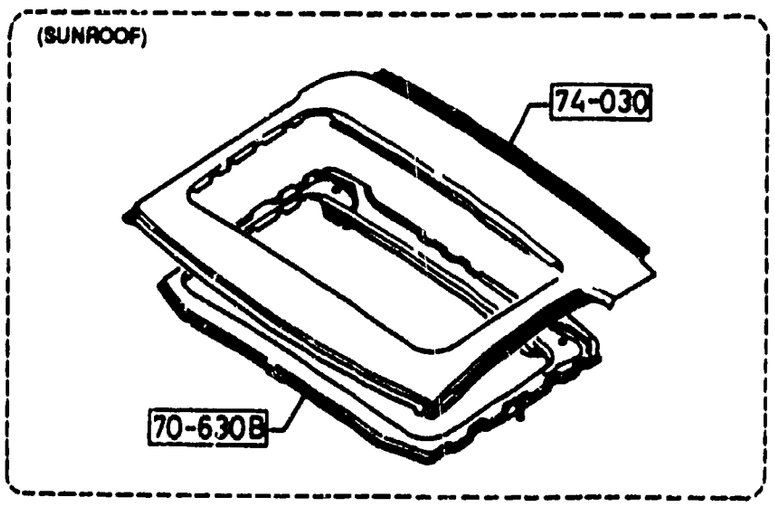

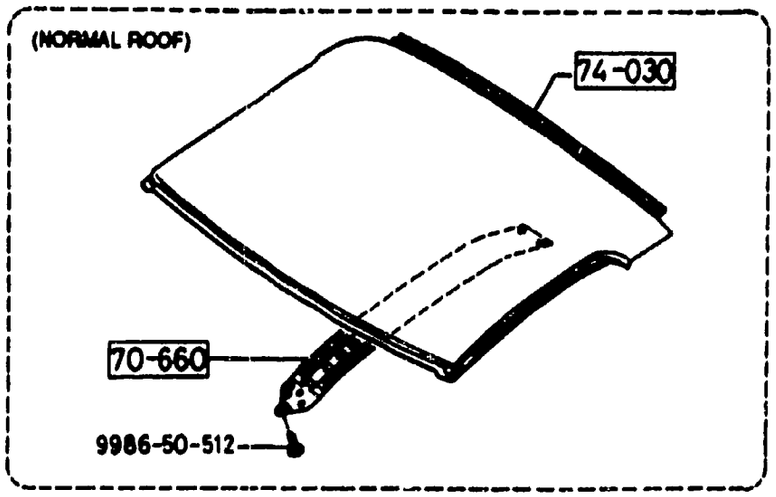

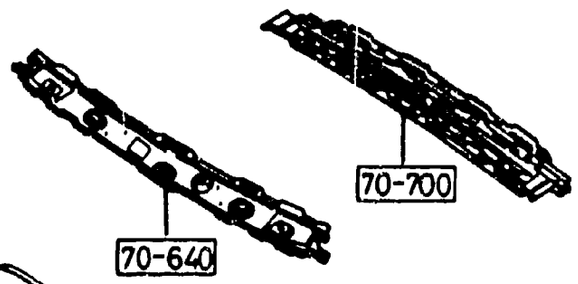

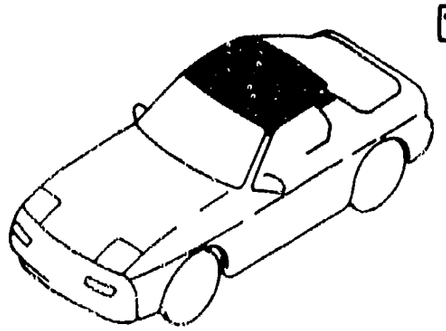

ITEM NO.	D-CODE	DESCRIPTION	PART NO.	QTY	MODEL/DESCRIPTION	REMARKS
	70 630B	PLATE, FIXING	FB03-70-630E	1	W/ SUNROOF	
	70 640	HEADER, FRONT	FB01-70-640A	1		
	70 660	REINFORCEMENT, ROOF	FB01-70-609A	1	W/O SUNROOF	
	70 700	HEADER, REAR	FB01-70-700C	1		
	74 030	PANEL, ROOF	FC01-70-601	1	W/O SUNROOF	
			FC03-70-601	1	W/ SUNROOF	

5370-1 BODY PANELS (FLOOR) (COUPE)

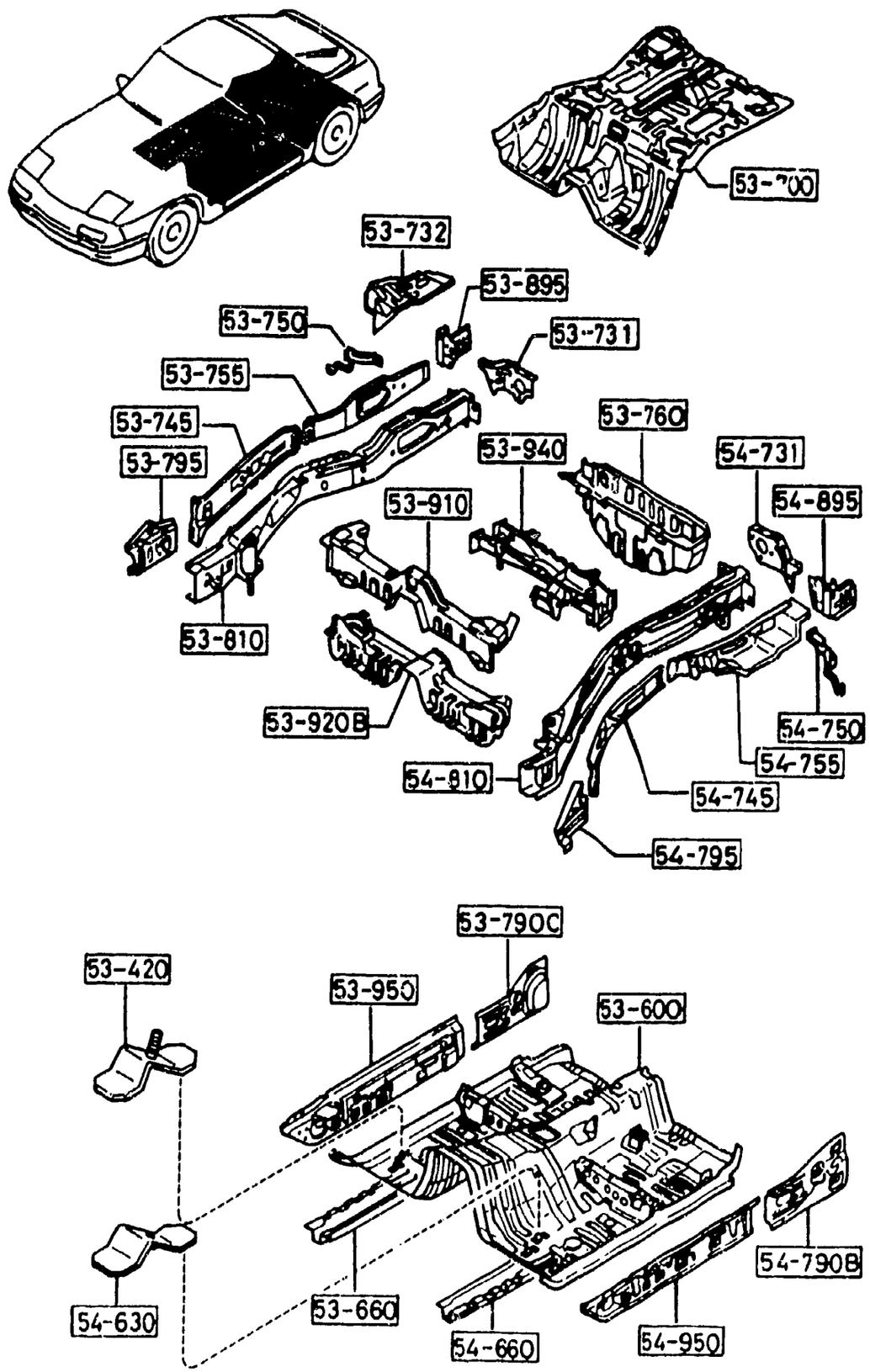

ITEM NO.	D-CODE	DESCRIPTION	PART NO	QTY	MODEL/DESCRIPTION	REMARKS
	53 420	BRACKET 'A', CONTROL UNIT	FB01-53-685	2		5901-
	53 600	PAN, FLOOR-FRONT	FB01-53-600F	1	M/T	
			FB02-53-600D	1	A/T	
	53 660	FRAME (RR., R), FRONT	FB01-53-660	1		
	53 700	PAN, FLOOR-REAR	FC01-53-710A	1		
	53 731	PLATE (R), SEAL-RR. SIDE FRAME	FB01-53-731B	1		
	53 732	PANEL (R), SIDE-RR. FLOOR	FB01-53-732	1		
	53 745	PLATE 'A' (R), CLOSING-FRONT	FB01-53-745C	1		
	53 750	BRACKET (R), SILENCER-SIDE PANEL	FE01-53-750B	1		
	53 755	PLATE 'A' (R), CLOSING-REAR	FB01-53-755	1		
	53 760	PAN, SPARE TIRE	FB01-53-760H	1		
	53 790C	PLATE 'B' (R), CLOSING-FRAME	FB01-53-790	1		
	53 795	PLATE 'C' (R), CLOSING-FRAME	FB01-53-796	1		
	53 810	FRAME (R), REAR SIDE	FB01-53-810L	1		
	53 895	GUSSET (R), LOCK TOWER	FB01-53-895B	1		
	53 910	MEMBER NO. 3, CROSS-UPPER	FC01-53-910	1		
	53 920B	MEMBER NO. 3, CROSS-LOWER	FB01-53-920C	1		
	53 940	MEMBER NO. 4, CROSS	FC01-53-930A	1		
	53 950	PANEL (R), SIDE SILL	FB01-53-951	1		
	54 630	BRACKET 'B', CONTROL UNIT	FB01-54-685	2		5901-
	54 660	FRAME (RR., L), FRONT	FC01-54-660	1		
	54 731	PLATE (L), SEAL-RR. SIDE FRAME	FB01-54-731B	1		
	54 745	PLATE 'A' (L), CLOSING-FRONT	FC01-54-74X			
	54 750	BRACKET (L), SILENCER-SIDE PANEL	FB01-54-750B	1		
	54 755	PLATE 'A' (L), CLOSING-REAR	FC01-54-75Y	1		
	54 790B	PLATE 'B' (L), CLOSING-FRAME	FB01-54-790	1		
	54 795	PLATE 'C' (L), CLOSING-FRAME	FB01-54-796	1		
	54 810	FRAME (L), REAR SIDE	FB01-54-810M	1		
	54 895	GUSSET (L), LOCK TOWER	FB01-54-895B	1		
	54 950	PANEL (L), SIDE SEAL	FB01-54-950	1		

5901 FC33* -102044

5370A-1 BODY PANELS (FLOOR) (CONVERTIBLE)

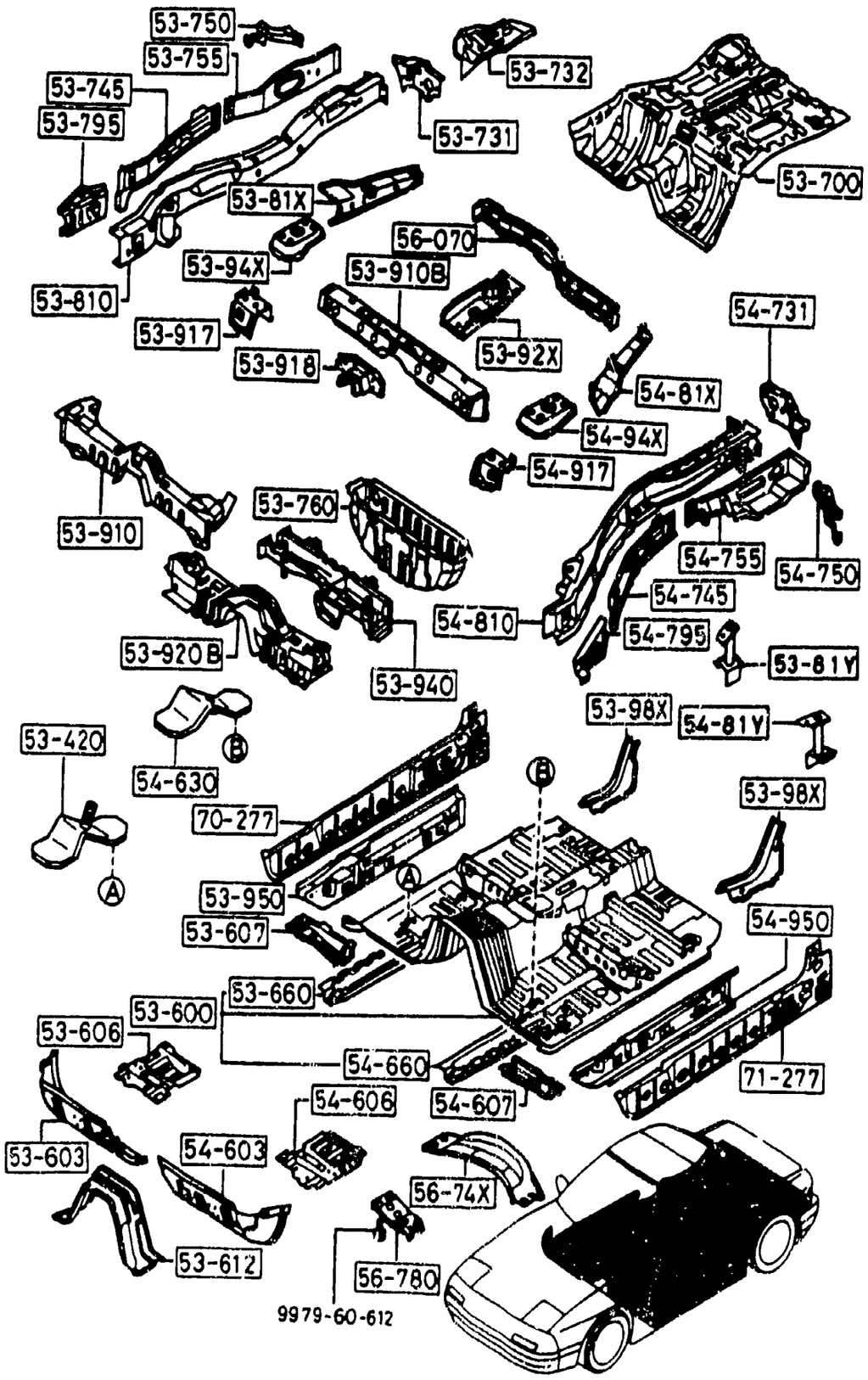

ITEM NO	D-CODE	DESCRIPTION	PART NO	QTY	MODEL/DESCRIPTION	REMARKS
	53 420	BRACKET 'A', CONTROL UNIT	FB01-53-685	2		
	53 600	PAN, FLOOR-FRONT	FC33-53-600A	1		
	53 603	REINFORCEMENT 'A' (R), FRONT FLOOR	FB67-53-603A	1		
	53 606	REINFORCEMENT 'B' (R), FRONT FLOOR	FB67-53-606	1		
	53 607	REINFORCEMENT 'C' (R), FRONT FLOOR	FB67-53-607A	1		
	53 612	REINFORCEMENT, TUNNEL-FRONT	FB67-53-612A	1		
	53 660	FRAME (RR., R), FRONT	FB67-53-660	1		
	53 700	PAN, FLOOR-REAR	FB01-53-710F	1		
	53 731	PLATE (R), SEAL-REAR SIDE FRAME	FB01-53-731B	1		
	53 732	PANEL (R), SIDE-REAR FLOOR	FB01-53-732A	1		
	53 745	PLATE 'A' (R), CLOSING-FRONT	FB67-53-74XA	1		
	53 750	BRACKET (R), SILENCER-SIDE PANEL	FB67-53-750A	1		
	53 755	PLATE 'A' (R), CLOSING-REAR	FC33-53-75X	1		
	53 760	PAN, SPARE TIRE	FB67-53-760B	1		
	53 795	PLATE 'C' (R), CLOSING-FRAME	FB01-53-796	1		
	53 810	FRAME (R), REAR SIDE	FB67-53-810A	1		
	53 81X	FRAME (R), REAR SIDE-UPPER	FB67-53-81XA	1		
	53 910	MEMBER NO. 3, CROSS-UPPER	FB01-53-910C	1		
	53 9108	REINFORCEMENT, CROSS MEMBER NO. 3-UPPER	FB67-53-910B	1		
	53 917	REINFORCEMENT (R), NO. 3 MEMBER-UPPER	FB67-53-917	1		
	53 918	REINFORCEMENT, TUNNEL-REAR	FB67-53-918	1		
	53 9208	MEMBER NO. 3, CROSS-LOWER	FB67-53-920	1		
	53 92X	REINFORCEMENT, SPARE TIRE	FB67-53-92X	1		
	53 940	MEMBER NO. 4, CROSS	FB01-53-930J	1		
	53 94X	BRACKET (R), MOTOR-SIDE FRAME	FB67-53-94X	1		
	53 950	PANEL (R), SIDE SILL	FB67-53-950	1		
	53 98X	GUSSET, FRONT FLOOR PAN	FB67-53-98XA	2		
	54 603	REINFORCEMENT 'A' (L), FRONT FLOOR	FB67-54-603A	1		
	54 606	REINFORCEMENT 'B' (L), FRONT FLOOR	FB67-54-606	1		
	54 607	REINFORCEMENT 'C' (L), FRONT FLOOR	FB67-54-607A	1		
	54 630	BRACKET 'B', CONTROL UNIT	FB01-54-685	2		
	54 660	FRAME (RR., L), FRONT	FB67-54-660	1		
	54 731	PLATE (L), SEAL-REAR SIDE FRAME	FB01-54-731B	1		
	54 745	PLATE 'A' (L), CLOSING-FRONT	FB67-54-74XA	1		

5370A-2 BODY PANELS (FLOOR) (CONVERTIBLE)

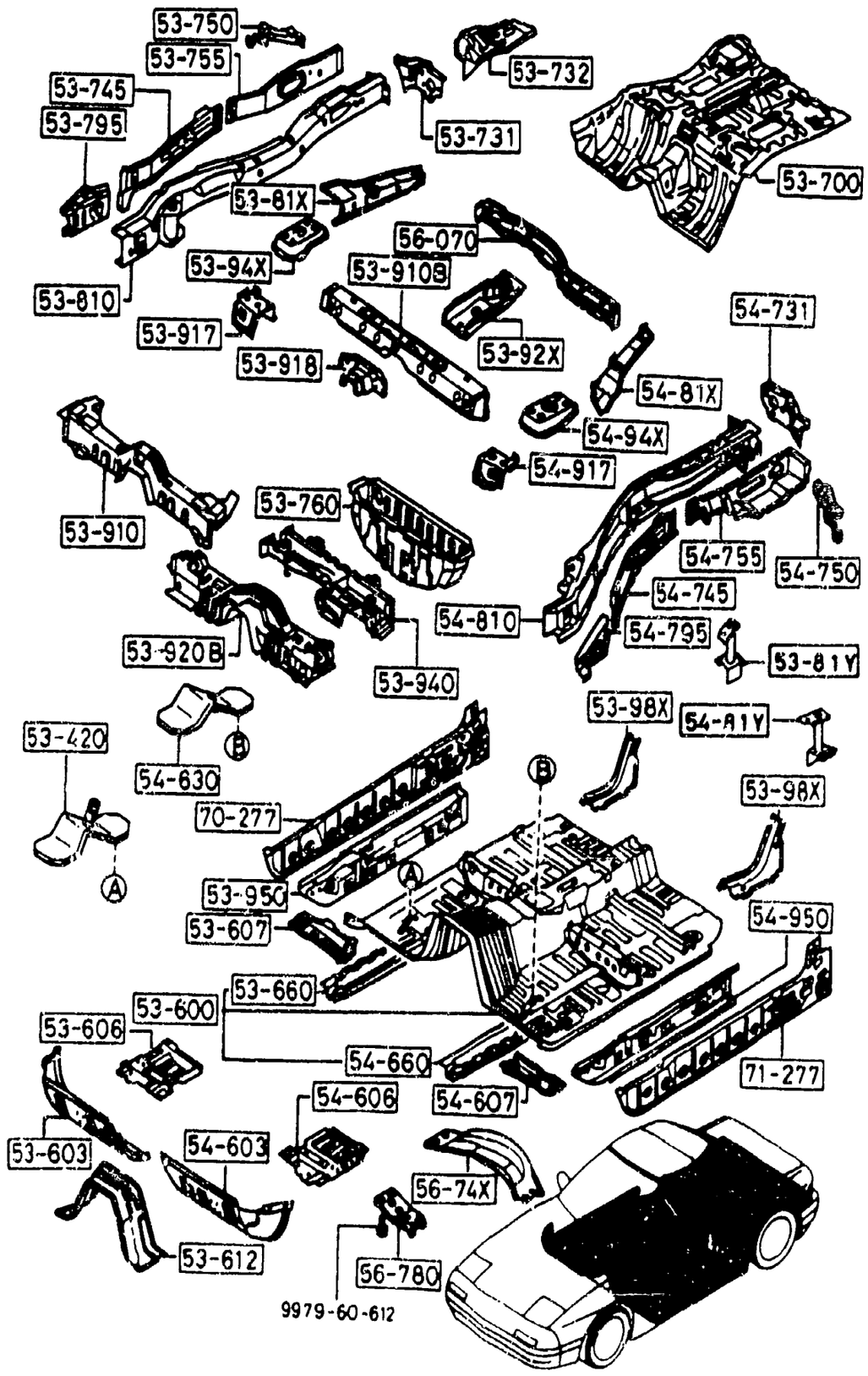

ITEM NO	D-CODE	DESCRIPTION	PART NO	QTY	MODEL/DESCRIPTION	REMARKS
	54 750	BRACKET (L), SILENCER-SIDE PANEL	FB67-54-750A	1		
	54 755	PLATE 'A' (L), CLOSING-REAR	FB67-54-75X	1		
	54 795	PLATE 'C' (L), CLOSING-FRAME	FB01-54-796	1		
	54 810	FRAME (L), REAR SIDE	FB67-54-810	1		
	54 81X	FRAME (L), REAR SIDE-UPPER	FB67-54-81XA	1		
	54 917	REINFORCEMENT (L), NO. 3 MEMBER-UPPER	FB67-54-917	1		
	54 94X	BRACKET (L), MOTOR-SIDE FRAME	FB67-54-94X	1		
	54 950	PANEL (L), SIDE SEAL	FB67-54-950	1		
	56 070	PANEL, BULK HEAD	FB67-53-726A	1		
	56 74X	MEMBER, FRONT FLOOR	FB67-56-74XA	1		
	56 780	GUSSET, FRONT FLOOR	FB67-56-780	2		
	70 277	REINFORCEMENT (R), SIDE SILL	FB67-53-790	1		
	71 277	REINFORCEMENT (L), SIDE SILL	FB67-54-790	1		

SECTION INDEX -- BODY

STARTING LOCATION	SECT NO	SECTION NAME
2 - C 3	0900A	KEY SETS
2 - E 3	5000	FRONT BUMPER
2 - F 3	5005	RADIATOR GRILLE
2 - G 3	5010A	REAR BUMPER
2 - H 3	5030A	WINDOW MOULDINGS
2 - I 3	5040A	BODY MOULDINGS
2 - J 3	5060A	SIDE PROTECTORS
2 - K 3	5100	HEAD LAMPS
2 - L 3	5103	HEAD LAMP RETRACTORS
2 - M 3	5105	FRONT COMBINATION LAMPS
2 - C 4	5110A	REAR COMBINATION LAMPS
2 - E 4	5120	LICENSE LAMPS
2 - F 4	5125	INTERIOR LAMPS
2 - G 4	5130	OVERHEAD CONSOLE (COUPE)
2 - H 4	5170	ORNAMENTS
2 - I 4	5180	COWL & EXTRACTOR GILLES
2 - K 4	5230	HOOD
2 - L 4	5260	TRUNK LID (CONVERTIBLE)
2 - M 4	5310	BODY PANELS (FRONT) (COUPE)
2 - N 4	5310A	BODY PANELS (FRONT) (CONVERTIBLE)
2 - C 5	5320	BODY PANELS (FENDER & WHEEL APRON) (COUPE)
2 - D 5	5320B	BODY PANELS (FENDER & WHEEL APRON) (CONVERTIBLE)
2 - E 5	5330	BODY PANELS (DASH & COWL PANEL)
2 - F 5	5340A	BODY PANELS (SIDE) (COUPE)
2 - H 5	5340AA	BODY PANELS (SIDE) (CONVERTIBLE)
2 - K 5	5360A	BODY PANELS (ROOF) (COUPE)
2 - L 5	5370	BODY PANELS (FLOOR) (COUPE)
2 - M 5	5370A	BODY PANELS (FLOOR) (CONVERTIBLE)
2 - C 6	5390	FLOOR ATTACHMENTS (COUPE)
2 - E 6	5390A	FLOOR ATTACHMENTS (CONVERTIBLE)
2 - G 6	5500	DASHBOARD EQUIPMENTS (COUPE) (W O ANTI-LOCK BRAKE SYSTEM)
2 - I 6	5500A	DASHBOARD EQUIPMENTS (COUPE) (ANTI-LOCK BRAKE SYSTEM)
2 - J 6	5500B	DASHBOARD EQUIPMENTS (CONVERTIBLE)
2 - K 6	5520	METER HOOD
2 - L 6	5530	SPEEDOMETER CABLE
2 - M 6	5540	METER COMPONENTS (COUPE) (W O ANTI-LOCK BRAKE SYSTEM)
2 - C 7	5540A	METER COMPONENTS (COUPE) (ANTI-LOCK BRAKE SYSTEM)
2 - E 7	5540B	METER COMPONENTS (CONVERTIBLE)
2 - F 7	5560	DASHBOARD & RELATED PARTS
2 - I 7	5570	CONSOLE
2 - K 7	5580	VENTILATOR
2 - C 8	5700A	FRONT SEATS (COUPE)
2 - C 9	5700AA	FRONT SEATS (COUPE) (LEATHER)
2 - C10	5700AB	FRONT SEATS (CONVERTIBLE) (CLOTH)
2 - F10	5700AC	FRONT SEATS (CONVERTIBLE) (LEATHER)
2 - J10	5750A	REAR SEATS (CLOTH)
2 - C11	5750AA	REAR SEATS (LEATHER)
2 - H11	5790A	SEAT BELTS
2 - J11	5800A	FRONT DOORS (COUPE)
2 - K11	5800AA	FRONT DOORS (CONVERTIBLE)
2 - C12	5830A	FRONT DOOR MECHANISMS (COUPE)
2 - H12	5830AA	FRONT DOOR MECHANISMS (CONVERTIBLE)
2 - C13	5840A	FRONT DOOR TRIMS & RELATED PARTS (COUPE)
2 - K13	5840AB	FRONT DOOR TRIMS & RELATED PARTS (CONVERTIBLE)
2 - N13	6100	HEATER
2 - C14	6110	HEATER UNIT COMPONENTS
2 - D14	6115	HEATER CONTROLS COMPONENTS
2 - E14	6120	HEATER BLOWER COMPONENTS
2 - F14	6130	AIR CONDITIONER (W O AIR CONDITIONER)
2 - G14	6132A	CONDENSER PACKAGE
2 - I14	6142A	COMPRESSOR MOUNTING KIT COMPRESSOR CLUTCH ASSEMBLY & REPAIR PARTS
2 - J14	6152A	EVAPORATOR PACKAGE
2 - K14	6200	LIFT GATE
2 - L14	6230	LIFT GATE MECHANISMS (COUPE)
2 - N14	6300A	WINDOW GLASSES
2 - C15	6330	SUNROOF (COUPE)
2 - E15	6330A	SOFT TOP (CONVERTIBLE)
2 - G15	6600B	SWITCHES & RELAYS (ENGINE) (W O TURBO)
2 - J15	6600BA	SWITCHES & RELAYS (ENGINE) (TURBO)
2 - M15	6610	DASHBOARD SWITCHES (MANUAL OPERATING)
2 - N15	6611	COMBINATION SWITCH
2 - C16	6612	CLUSTER SWITCH
2 - D16	6615	POWER WINDOW SWITCHES
2 - E16	6620	DOOR SWITCH
2 - F16	6630	RELAYS & CPU (BODY)
2 - G16	6635	HORNS
2 - H16	6640	AUTO CRUISE CONTROL SYSTEM
2 - I16	6680	AUDIO SYSTEMS (RADIO & TAPE DECK)

5390-1 FLOOR ATTACHMENTS (COUPE)

(THIS ILLUSTRATION CONSISTS OF 2 PAGES)

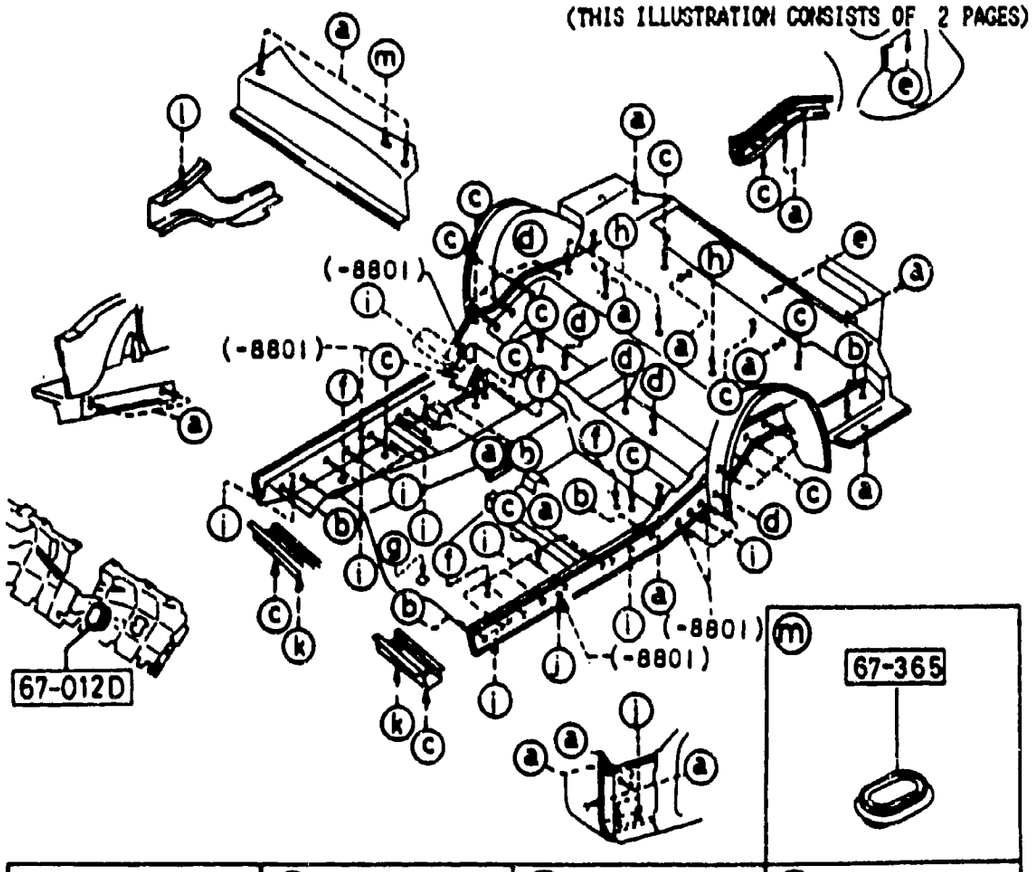

			ⓜ 67-365
ⓐ 56-242	ⓑ 66-971K	ⓒ 56-052	ⓓ 56-112B
ⓔ 56-639	ⓕ 56-971	ⓖ 56-051	ⓗ 9078-60-620
ⓘ 56-241B	ⓙ 43-095	ⓚ 56-241J	ⓛ 9978-60-816

(THIS ILLUSTRATION CONSISTS OF 2 PAGES)

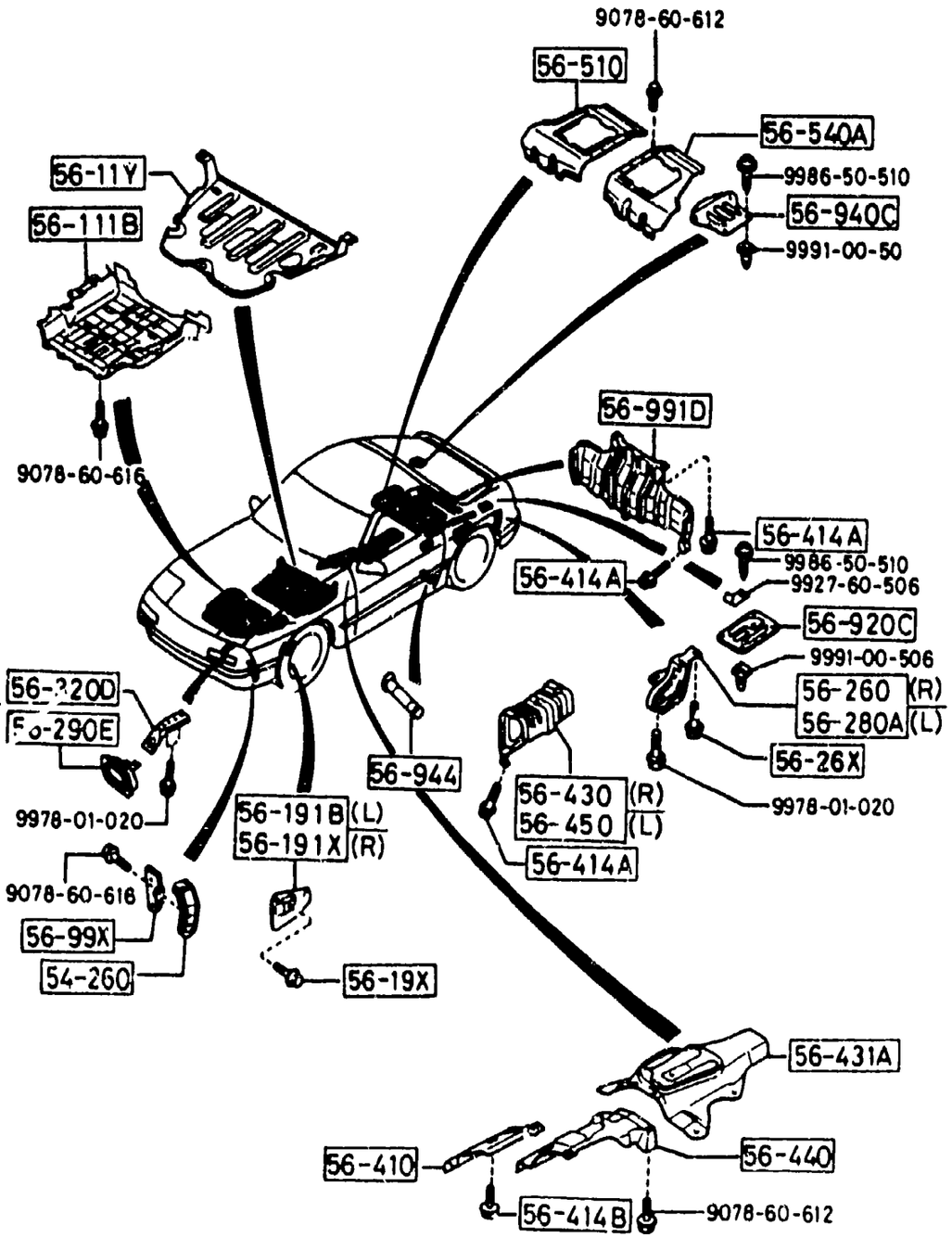

5390-2 FLOOR ATTACHMENTS (COUPE)

SEE ILLUSTRATION/S AT FRAME 2 - C 6

ITEM NO.	D-CODE	DESCRIPTION	PART NO.	QTY	MODEL/DESCRIPTION	REMARKS
	43 095	GROMMET	H001-43-095	4		
	54 260	BRACKET, BATTERY	FB01-56-990A	1		
	56 051	COVER, HOLE	1011-56-051	2		
	56 052	PLUG, DRAIN	FB01-56-056	23		-6801
				21		6801-
	56 111B	COVER, UNDER-FRONT	FB01-56-111C	1		
	56 112B	PLUG, DRAIN	FB01-56-057	4		
	56 11Y	COVER, UNDER-REAR	FB43-56-112D	1		
	56 191B	SHIELD (L), SPLASH-SIDE FRAME	FB01-56-191A	1		
	56 191X	SHIELD (R), SPLASH-SIDE FRAME	FB01-56-192A	1		
	56 19X	BOLT, SPLASH SHIELD	FB01-56-19XA	4	M/T W/ SUNROOF	
	56 241B	PLUG	B001-56-051	22		
	56 241J	PLUG, DRAIN	8477-56-241	2		
	56 242	PLUG, DRAIN	0118-56-242B	28	W/ SUNROOF	
				30	W/O SUNROOF	
	56 260	HOOK (R), REAR	FB01-56-260C	1		
	56 26X	BOLT, REAR HOOK	FB01-56-26X	10		6601-
	56 280A	HOOK (L), REAR	FB01-56-280C	1		
	56 290E	COVER, TOWING HOOK	FB01-56-290	1		
	56 320D	HOOK, TOWING	FB01-56-241	1		
	56 410	INSULATOR, HEAT-FRONT	FB01-56-410B	1		
	56 414A	BOLT, SILENCER	FB01-56-416	10		
	56 414B	BOLT, INSULATOR-FRONT HEAT	FB01-56-414	11		
	56 430	INSULATOR (R)	FB01-56-460B	1		
	56 431A	INSULATOR NO. 3, FRONT	FB01-56-430C	1		
	56 440	INSULATOR NO. 2, FRONT	FB01-56-420A	1		
	56 450	INSULATOR (L)	FB01-56-450D	1		
	56 510	DECK (R), FLOOR	FC11-56-510A	1		
	56 540A	DECK (L), FLOOR	FC11-56-521A	1		
	56 639	COVER, SERVICE HOLE	0810-56-639	3		
	56 920C	COVER (L), SERVICE-REAR FLOOR	FB01-56-920	1		
	56 940C	COVER (R), SERVICE-REAR FLOOR	FB01-56-940	1		
	56 944	COLLAR, HARNESS-SIDE SILL	FB01-56-944	2		
	56 971	COVER, HOLE	0866-56-971	4		
	56 991D	INSULATOR, TANK-FUEL	FB01-56-470A	1		
	56 99X	SEAL, SIDE FRAME & BATTERY BRACKET	FB01-56-99XC	1		
	66 971K	GROMMET	0222-66-971	6		
	67 012D	GROMMET	S083-67-012A	2		5A01-6801
				1		6B01-

5A01 FC33* -107570
6601 FC33* -152302
6301 FC33* -507386
6B01 FC33* -522333

5390A-1 FLOOR ATTACHMENTS (CONVERTIBLE)

(THIS ILLUSTRATION CONSISTS OF 2 PAGES)

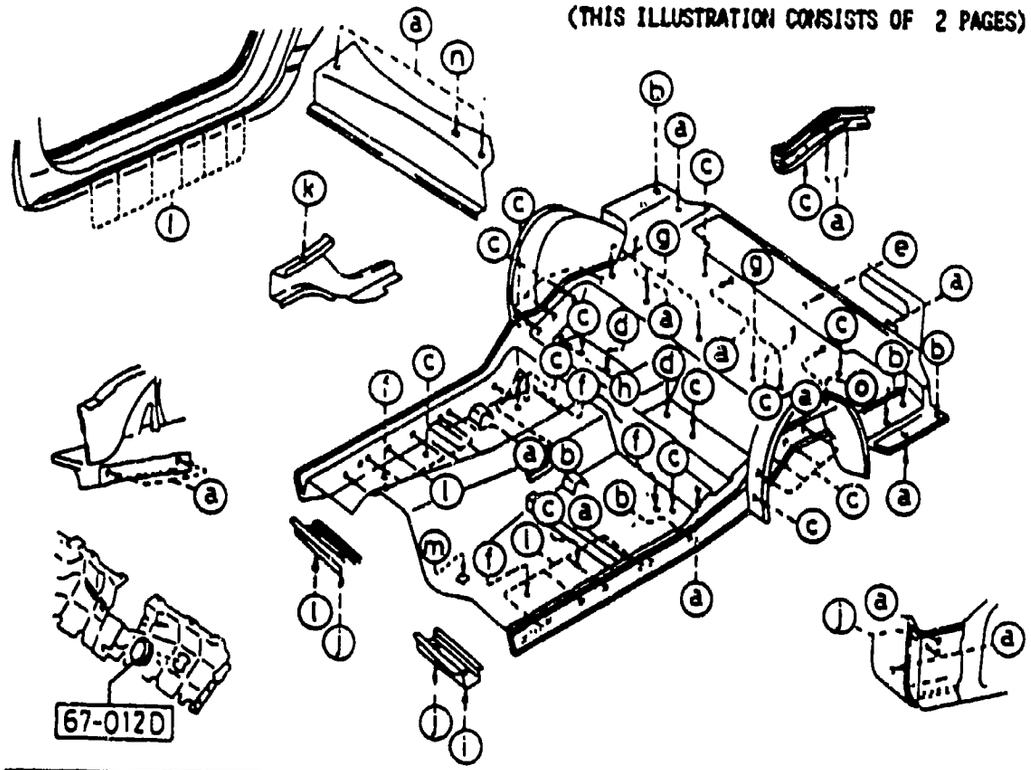

a 56-242	b 66-971K	c 56-052	d 56-112B	e 56-639
f 56-971	g 9070-60-620	h 67-506H	j 56-241J	k 9978-60-816
l 56-054	m 56-051	n 67-365	o 45-961B	

(THIS ILLUSTRATION CONSISTS OF 2 PAGES)

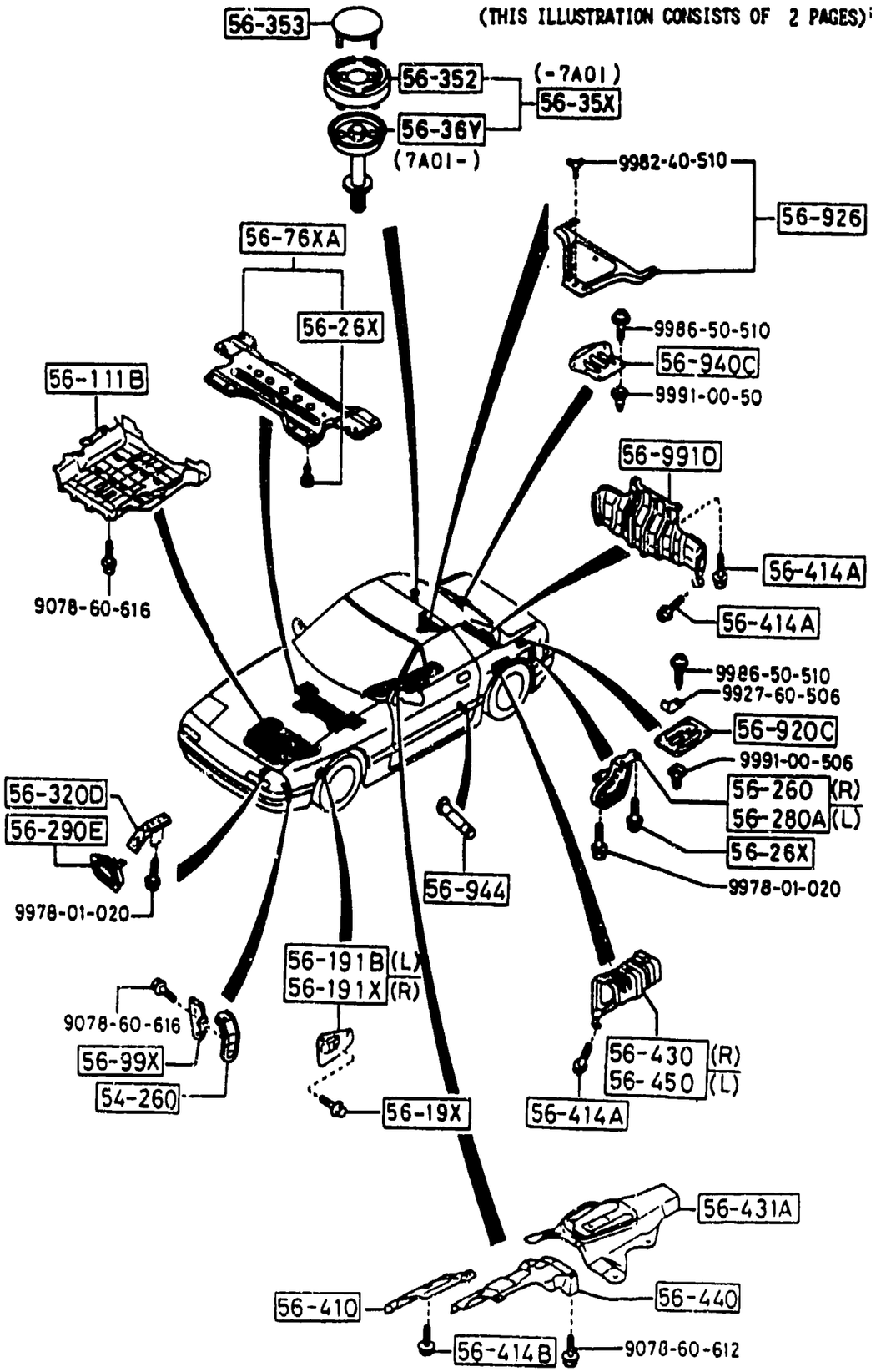

5390A-2 FLOOR ATTACHMENTS (CONVERTIBLE)

SEE ILLUSTRATION/S AT FRAME 2 - E 6

ITEM NO.	D-CODE	DESCRIPTION	PART NO.	QTY	MODEL/DESCRIPTION	REMARKS
	54 260	BRACKET, BATTERY	FB01-56-990A	1		
	56 051	COVER, HOLE	1011-56-051	2		
	56 052	PLUG, DRAIN	FB01-56-056	21		
	56 054	PLUG, HOLE	FB67-56-051	24		
	56 111B	COVER, UNDER-FRONT	FB01-56-111C	1		
	56 112B	PLUG, DRAIN	FB01-56-057	2		
	56 191B	SHIELD (L), SPLASH-SIDE FRAME	FB01-56-191A	1		
	56 191X	SHIELD (R), SPLASH-SIDE FRAME	FB01-56-192A	1		
	56 19X	BOLT, SPLASH SHIELD	FB01-56-19X	4		
	56 241J	PLUG, DRAIN	8477-56-241	4		
	56 242	PLUG, DRAIN	0118-56-242B	28		
	56 260	HOOK (R), REAR	FB01-56-260C	1		
	56 26X	BOLT, REAR HOOK	FB01-56-26X	18		
	56 280A	HOOK (L), REAR	FB01-56-280C	1		
	56 290E	COVER, TOWING HOOK	FB01-56-290	1		
	56 320D	HOOK, TOWING	FB01-56-241	1		
	56 410	INSULATOR, HEAT-FRONT	FB01-56-410B	1		
	56 414A	BOLT, SILENCER	FB01-56-416	10		
	56 414B	BOLT, INSULATOR-FRONT HEAT	FB01-56-414	11		
	56 430	INSULATOR (R)	FB01-56-460B	1		
	56 431A	INSULATOR NO. 3, FRONT	FB01-56-430C	1		
	56 440	INSULATOR NO. 2, FRONT	FB01-56-420A	1		
	56 450	INSULATOR (L)	FB01-56-450B	1		
	56 639	COVER, SERVICE HOLE	0810-56-639	1		
	56 76XA	MEMBER, CROSS-FRONT FRAME	FB67-56-76XB	1		
	56 920C	COVER (L), SERVICE-REAR FLOOR	FB01-56-920	1		
	56 926	COVER, TOOL BOX	FB67-56-926	1		
	56 940C	COVER (R), SERVICE-REAR FLOOR	FB01-56-940	1		
	56 944	COLLAR, HARNESS-SIDE SILL	FB01-56-944	2		
	56 971	COVER, HOLE	0866-56-971	4		
	56 991D	INSULATOR, TANK-FUEL	FB01-56-470A	1		
	56 99X	SEAL, SIDE FRAME & BATTERY BRACKET	FB01-56-99XC	1		
	66 971K	GROMMET	0222-66-971	6		
	67 012D	GROMMET	S083-67-012A	1		
	67 365	COVER, SEAL-COWL PANEL	FB31-56-058	1		
	67 506B	COVER, SERVICE HOLE	G043-67-506	2		

5500-1 DASHBOARD EQUIPMENTS (COUPE) (W/O ANTI-LOCK BRAKE SYSTEM)

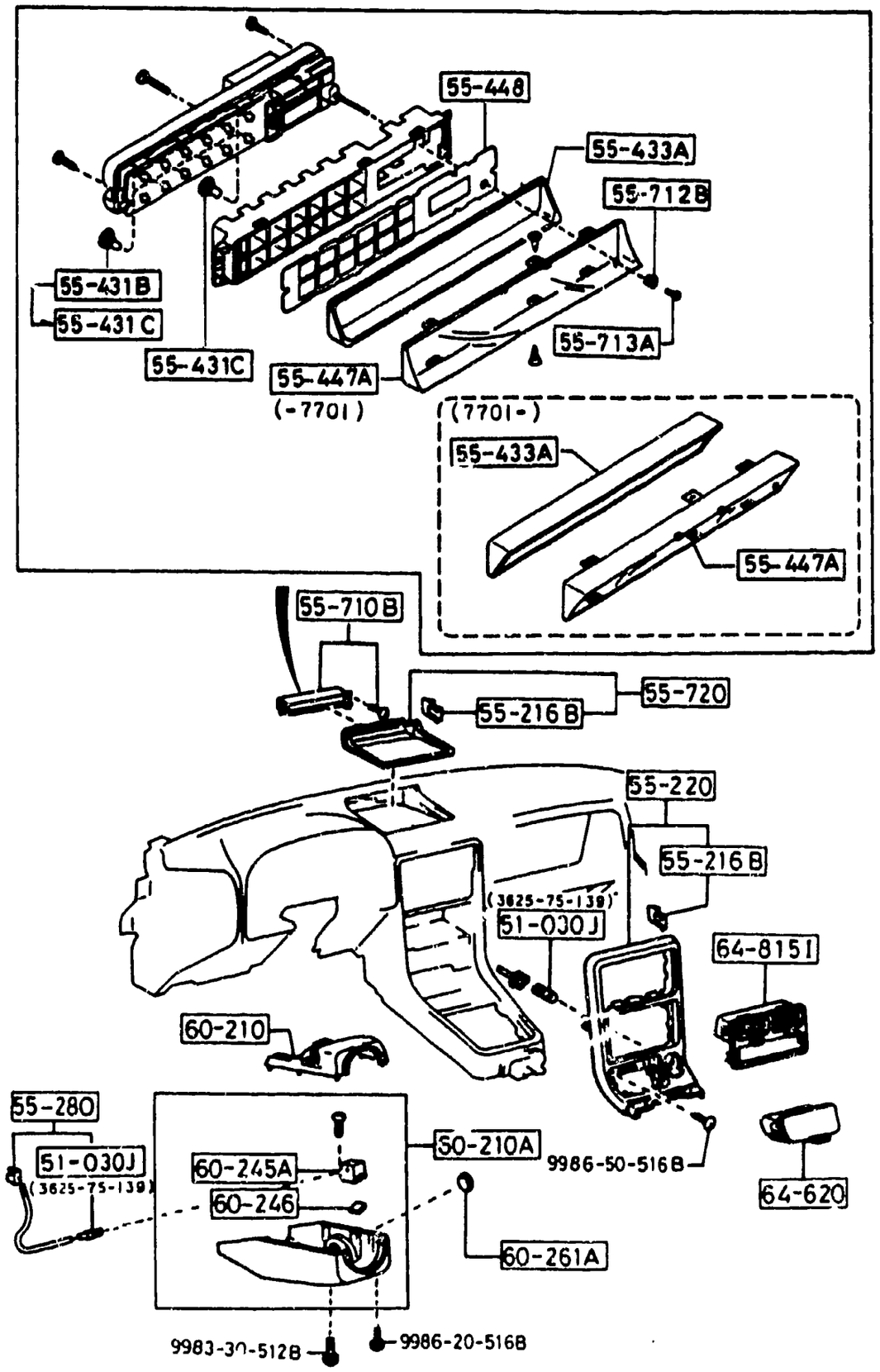

ITEM NO.	D-CODE	DESCRIPTION	PART NO.	QTY	MODEL/DESCRIPTION	REMARKS
	51 030J	BULB	0000-11-0194	1	12V 3.4W	
	55 216B	SPRING, CENTER PANEL	B092-55-257	4		
	55 220	PANEL, CENTER	FB01-55-210C	1	W/ COMPACT DISC	
			FB05-55-210B	1	W/O COMPACT DISC	
	55 280	BULB & SOCKET	G032-55-280A	1	W/ KEY ILLUM.	
	55 431B	BULB 'A', WARNING UNIT	FB01-55-431	10	M/T, W/O TURBO	-7701
				11	A/T, W/O TURBO M/T, TURBO	-7701
	55 431C	BULB 'B', WARNING UNIT	FB02-55-431	1		-7701
				11	M/T, W/O TURBO	7701-
				12	A/T, W/O TURBO M/T, TURBO	7701-
	55 433A	SEPARATOR, WARNING UNIT	FB01-55-433	2		
	55 447A	GLASS, FRONT-WARNING UNIT	FB02-55-447	1	W/ CLOCK	-7701
			FB02-55-447B	1	W/ CLOCK	7701-
	55 448	SHEET, WARNING-UNIT	FB02-55-448	1	W/ CLOCK M/T, W/O TURBO	-7701
			FB02-55-448A	1	W/ CLOCK M/T, W/O TURBO	7701-
			FB04-55-448	1	W/ CLOCK A/T, W/O TURBO M/T, TURBO	-7701
	55 710B	UNIT, WARNING	FB02-55-710D	1	W/ CLOCK M/T, W/O TURBO	-7701
			FB02-55-710F	1	W/ CLOCK M/T, W/O TURBO	7701-
			FB04-55-710D	1	W/ CLOCK M/T, TURBO A/T, W/O TURBO	-7701
			FB04-55-710F	1	W/ CLOCK A/T, W/O TURBO M/T, TURBO	7701-
	55 712B	KNOB, CLOCK	FB01-55-713	1	W/ CLOCK	
	55 713A	SCREW, RESET KNOB	FB01-55-714	1	W/ CLOCK	
	55 720	BEZEL, AUTO CLOCK	FB01-55-715A	1		-7701
		DARK GRAY	07			
		RED	10			
		BLUE	48			
			F055-55-71XB	1		7701-
		DARK GRAY	07			
		RED	10			
		BLUE	48			
	60 210	COVER, COLUMN-UPPER	FB01-60-221A	1		
	60 210A	COVER, COLUMN-LOWER	FB01-60-230	1		
	60 245A	CASE, LAMP	FB01-60-232	1		

7701 FC33* -550169

5500-2 DASHBOARD EQUIPMENTS (COUPE) (W/O ANTI-LOCK BRAKE SYSTEM)

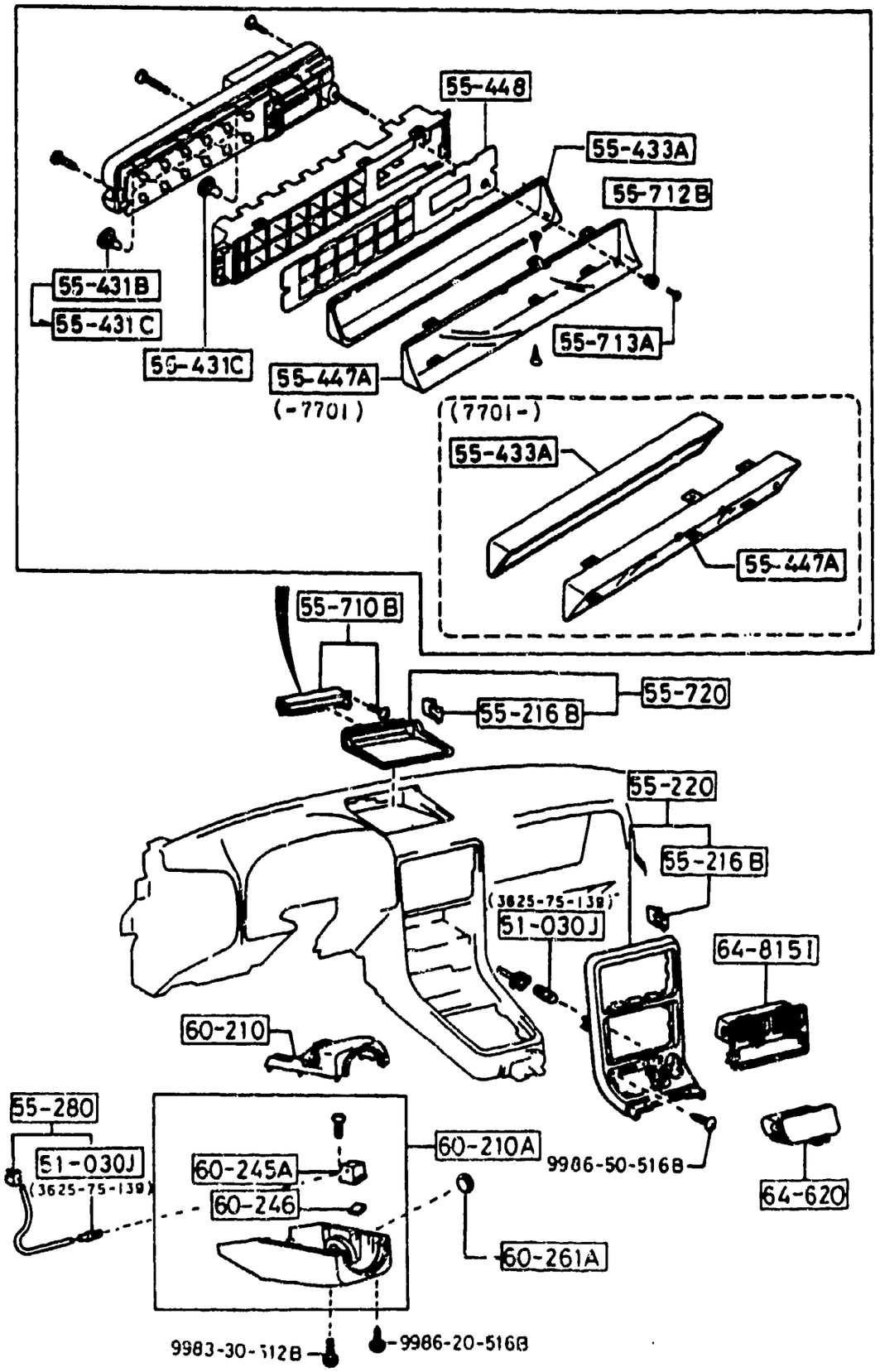

ITEM NO.	D-CODE	DESCRIPTION	PART NO.	QTY	MODEL/DESCRIPTION	REMARKS
	60 246	LENS, COLUMN COVER	FB01-60-233	1		
	60 261A	HOLDER, KEY CYLINDER	G001-60-261	1		-6B01
			FB01-60-261	1		6B01-
	64 620	TRAY, ASH	FB01-64-610D	1		
	64 8151	LOUVER	FB01-64-840B	1		

6B01 FC33* -522333

5500A-1 DASHBOARD EQUIPMENTS (COUPE) (ANTI-LOCK BRAKE SYSTEM)

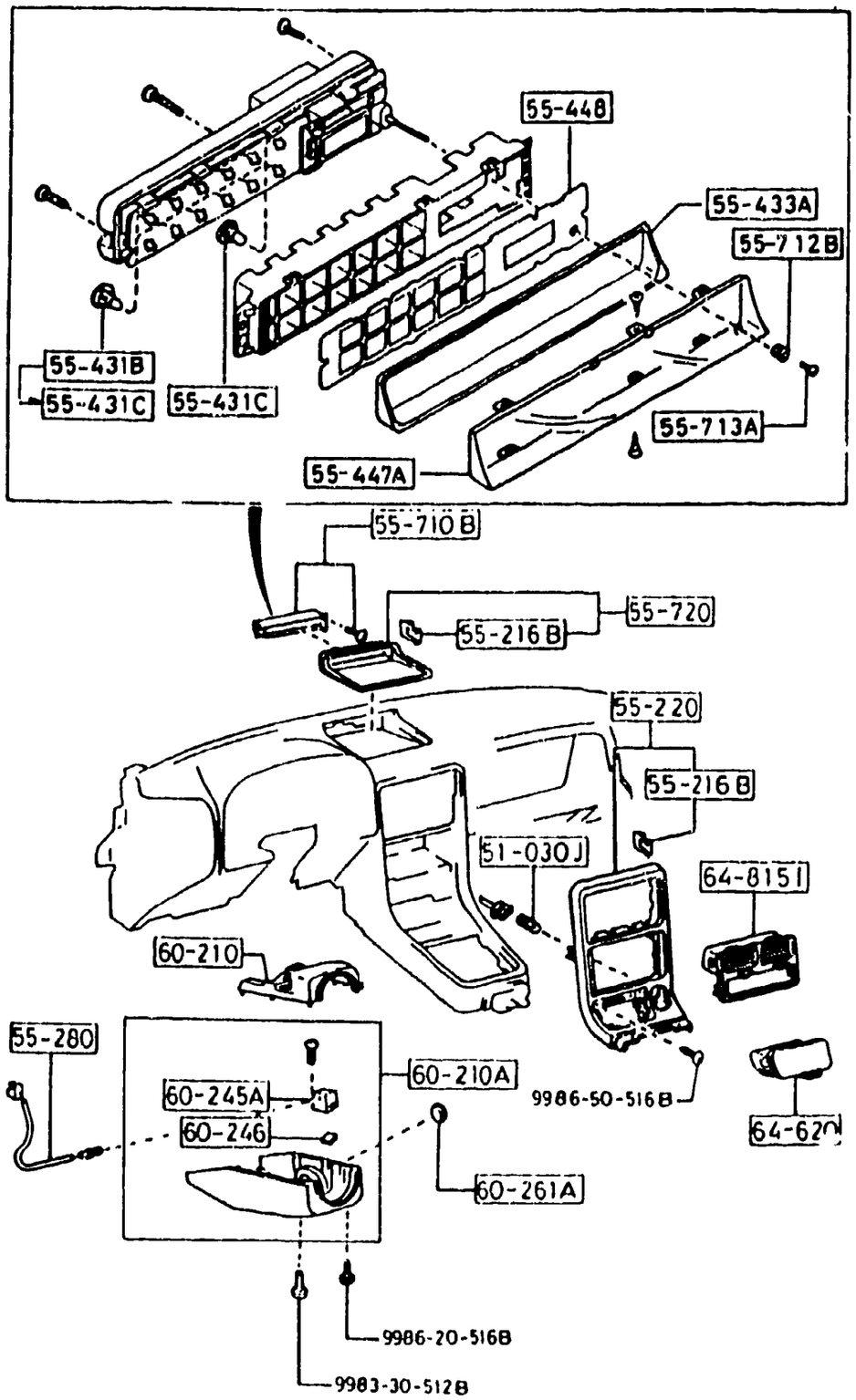

ITEM NO.	D-CODE	DESCRIPTION	PART NO.	QTY	MODEL/DESCRIPTION	REMARKS
	51 030J	BULB	0000-11-0194	1	12V 3.4W	
	55 216B	SPRING, CENTER PANEL	B092-55-257	4		
	55 220	PANEL, CENTER	FB01-55-210C	1	W/O COMPACT DISC	
			FB05-55-210B	1	W/ COMPACT DISC	
	55 280	BULB & SOCKET	G032-55-280A	1	W/ KEY ILLUM.	
	55 431B	BULB 'A', WARNING UNIT	FB01-55-431	11		-7701
	55 431C	BULB 'B', WARNING UNIT	FB02-55-431	1		-7701
				12		7701-
	55 433A	SEPARATOR, WARNING UNIT	FB01-55-433	2		
	55 447A	GLASS, FRONT-WARNING UNIT	FB02-55-447	1		-7701
			FB02-55-447B	1		7701-
	55 448	SHEET, WARNING-UNIT	FB55-55-448A	1		
	55 710B	UNIT, WARNING	FB55-55-710	1		-7701
			FB55-55-710B	1		7701-
	55 712B	KNOB, CLOCK	FB01-55-713	1		
	55 713A	SCREW, RESET KNIOB	FB01-55-714	1		
	55 720	BEZEL, AUTO CLOCK	FB01-55-715A	1		-7701
		DARK GRAY	07			
		RED	10			
		BLUE	48			
			F055-55-71XB	1		7701-
		DARK GRAY	07			
		RED	10			
		BLUE	48			
	60 210	COVER, COLUMN-UPPER	FB01-60-221	1		
	60 210A	COVER, COLUMN-LOWER	FB01-60-230	1		
	60 245A	CASE, LAMP	FB01-60-232	1		
	60 246	LENS, COLUMN COVER	FB01-60-233	1		
	60 261A	HOLDER, KEY CYLINDER	G001-60-261	1		-6B01
			FB01-60-261A	1		6B01-
	64 620	TRAY, ASH	FB01-64-610C	1		
	64 8151	LOUVER	FB01-64-840B	1		

6B01 FC33* -522333
7701 FC33* -550169

5500B-1 DASHBOARD EQUIPMENTS (CONVERTIBLE)

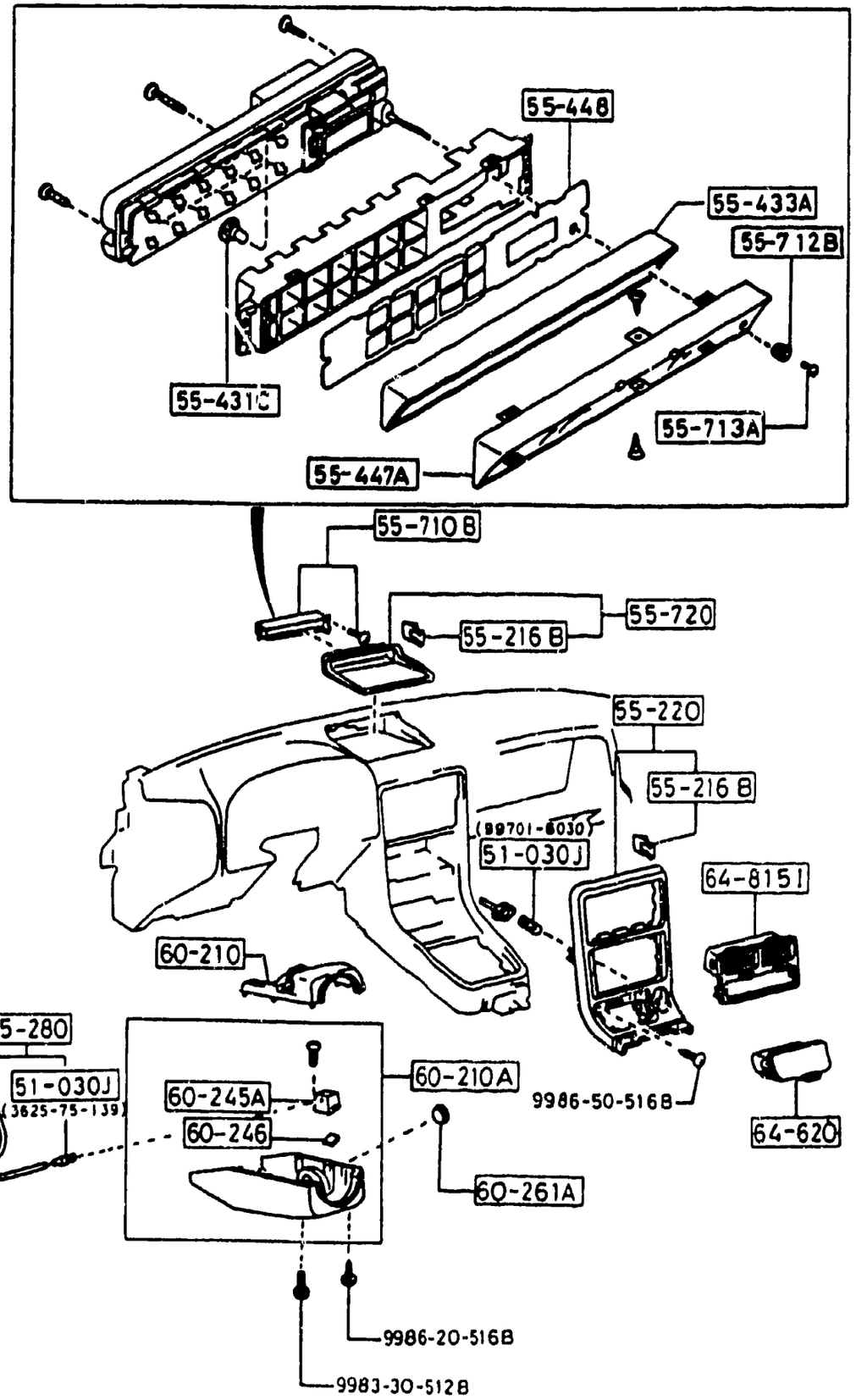

ITEM NO	D-CODE	DESCRIPTION	PART NO.	QTY	MODEL/DESCRIPTION	REMARKS
	51 030J	BULB	0000-11-0194	1	12V 3.4W	
	55 216B	SPRING, CENTER PANEL	B092-55-257	4		
	55 220	PANEL, CENTER	FB05-55-210B	1		
	55 280	BULB & SOCKET	G032-55-280A	1		
	55 431C	BULB 'B', WARNING UNIT	FB02-55-431	10		
	55 433A	SEPARATOR, WARNING UNIT	FB01-55-433	2		
	55 447A	GLASS, FRONT-WARNING UNIT	FB02-55-447B	1		
	55 448	SHEET, WARNING-UNIT	FB67-55-448A	1		
	55 710B	UNIT, WARNING	FB67-55-710A	1		
	55 712B	KNOB, CLOCK	FB01-55-713	1		
	55 713A	SCREW, RESET KNOB	FB01-55-714	1		
	55 720	BEZEL, AUTO CLOCK	F055-55-71XB	1		
		DARK GRAY	07			
		RED	10			
		BLUE	48			
	60 210	COVER, COLUMN-UPPER	FB01-60-221	1		
	60 210A	COVER, COLUMN-LOWER	FB01-60-230A	1		
	60 245A	CASE, LAMP	FB01-60-232	1		
	60 246	LENS, COLUMN COVER	FB01-60-233	1		
	60 261A	HOLDER, KEY CYLINDER	FB01-60-26'	1		
	64 620	TRAY, ASH	FB01-64-610D	1		
	64 8151	LOUVER	FB01-64-840B	1		

5520-1 METER HOOD

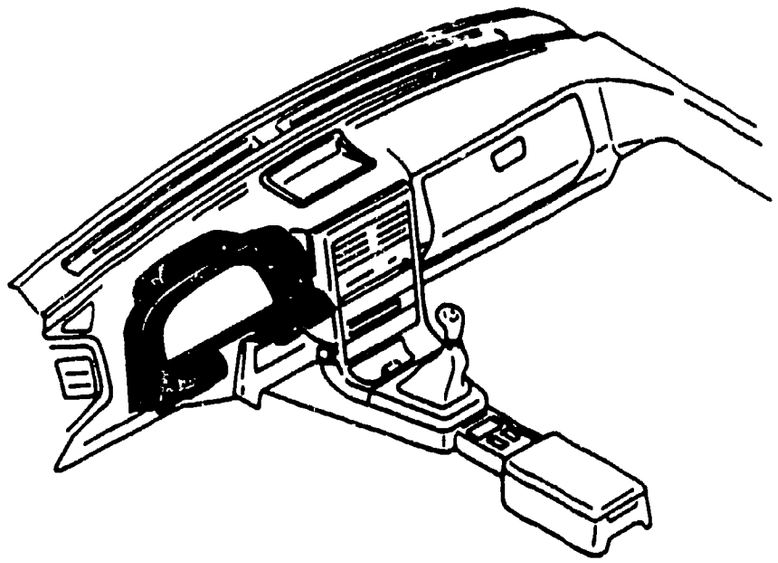

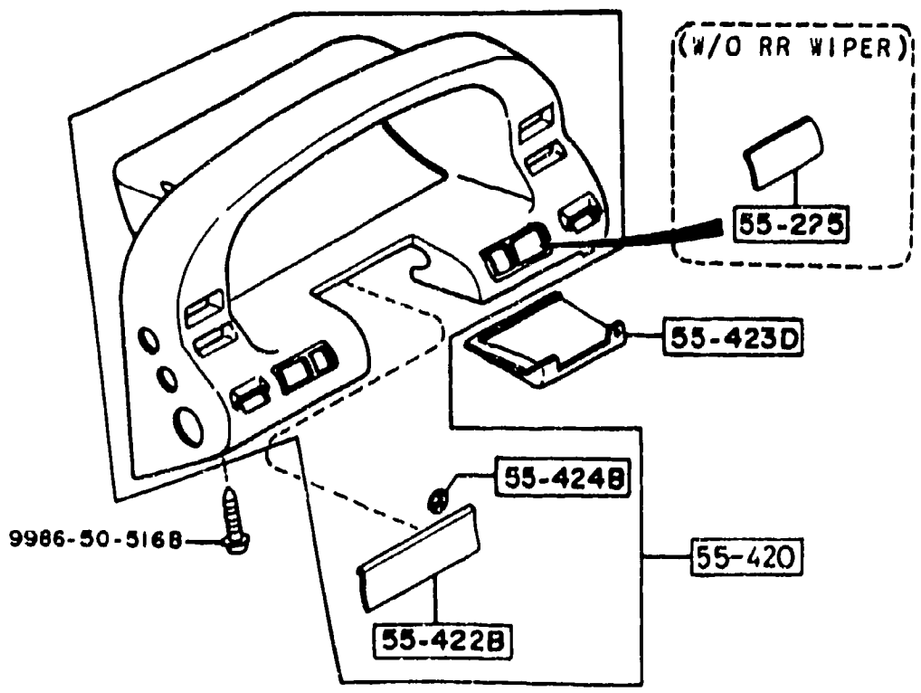

ITEM NO.	D-CODE	DESCRIPTION	PART NO.	QTY	MODEL/DESCRIPTION	REMARKS
	55 225	COVER, HOLE-CLUSTER SWITCH	FB01-55-225	1	W/O REAR WIPER	
	55 420	HOOD, METER & CLUSTER SWITCH	FB01-55-420C	1		
	55 422B	SEAL, DUST-CLUSTER SWITCH	FB01-55-422	1		
	55 423D	COVER, SERVICE HOLE-CLUSTER	FB01-55-423	1		
	55 424B	RING, PUSH-DUST SEAL	FB01-55-424	3		

5530-1 SPEEDOMETER CABLE

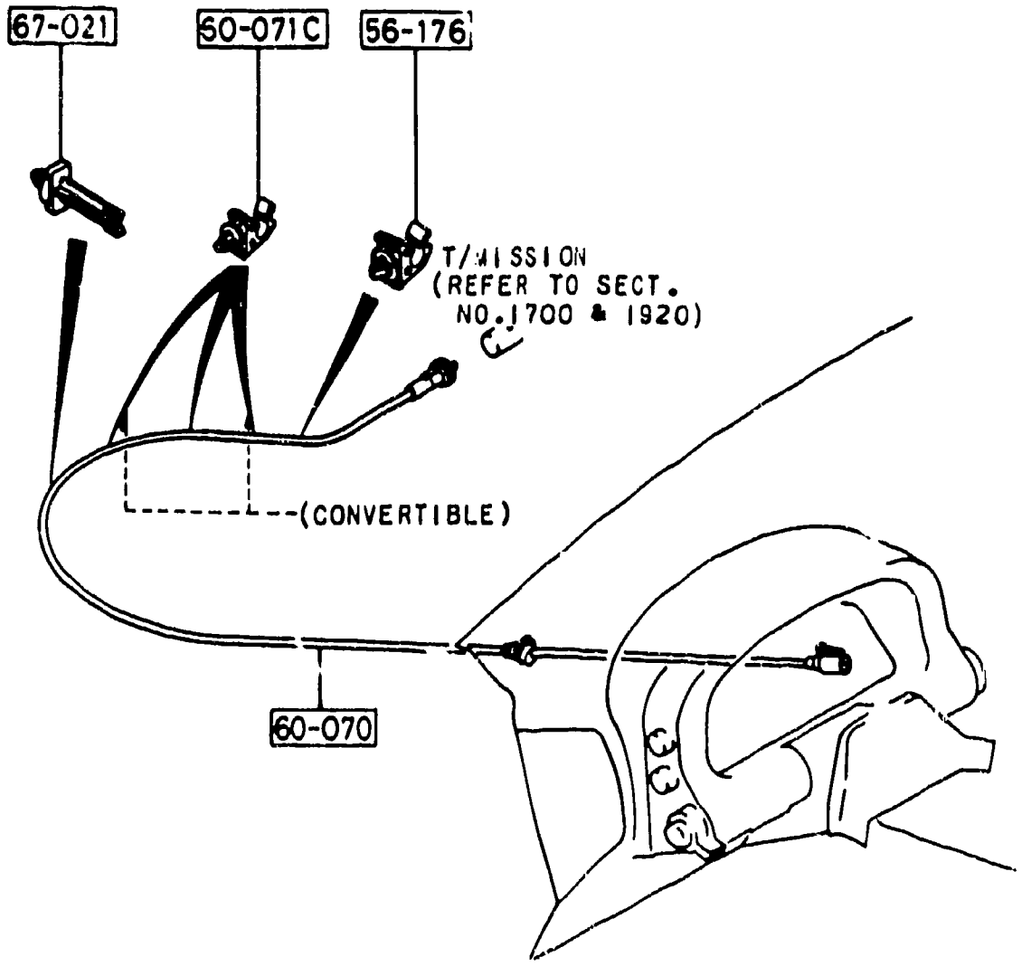

ITEM NO	D-CODE	DESCRIPTION	PART NO	QTY	MODEL/DESCRIPTION	REMARKS
	56 176	HOLDER, JACK HANDLE	G030-56-176	1		
	60 070	CABLE, SPEEDOMETER	FB01-60-070A	1	M/T, COUPE	
			FB02-60-070A	1	A/T, COUPE	
			FB67-60-070	1	M/T, CONV.	
	60 071C	CLIP	UB40-60-071	1	COUPE	
				3	CONV.	
	67 021	CLIP	FB01-67-021	1		

5540-1 METER COMPONENTS (COUPE) (W/O ANTI-LOCK BRAKE SYSTEM)

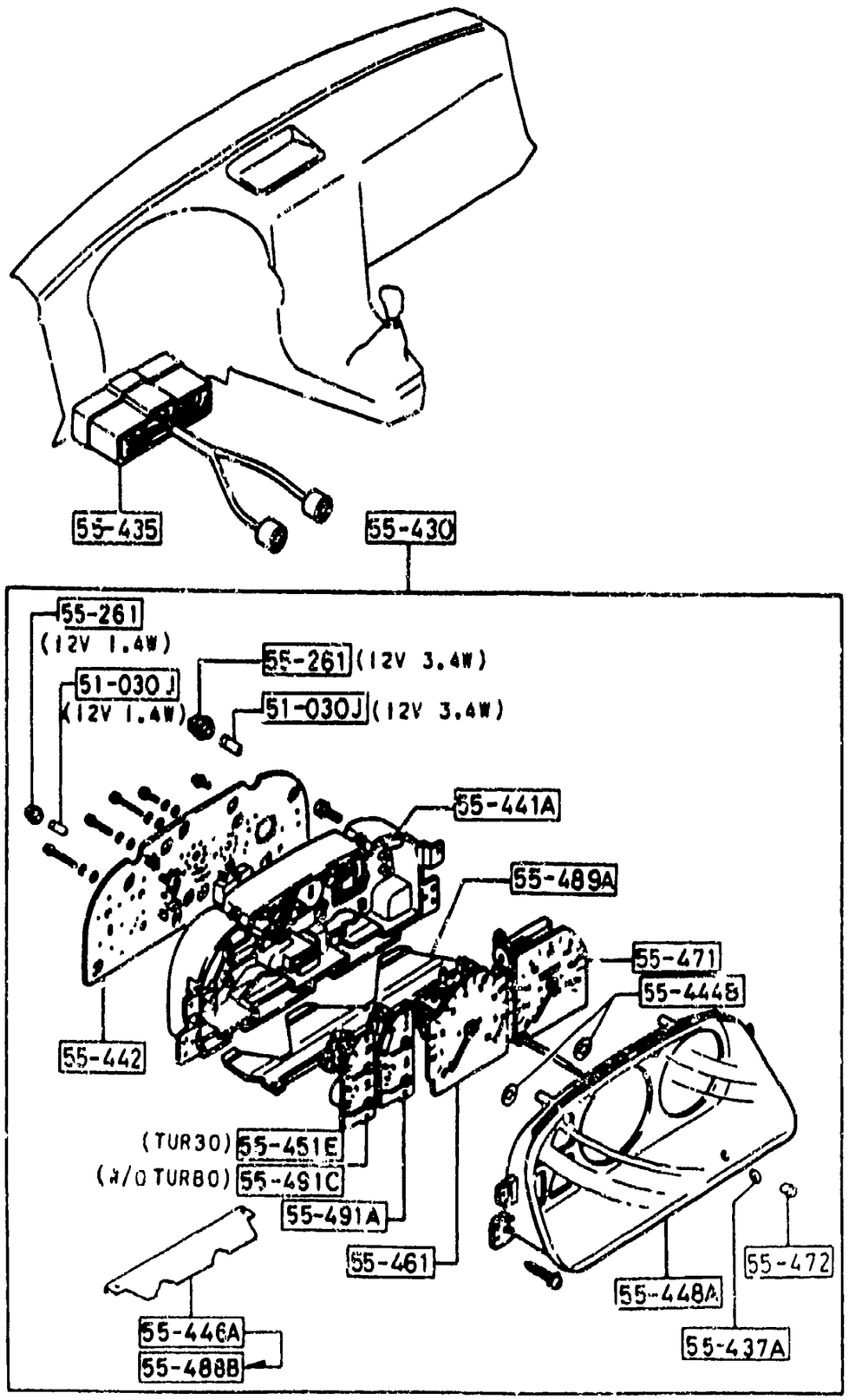

ITEM NO	D-CODE	DESCRIPTION	PART NO	QTY	MODEL/DESCRIPTION	REMARKS
	51 030J	BULB	0000-11-0074	1	12V 1.4W FOR WARNING	
			0000-11-0194	9	12V 3.4W	
	55 261	SOCKET	8548-55-261	1	12V 1 4W BLACK	
			1316-55-261	9	12V 3.4W	-7107
			8545-55-261	9	12V 3 4W	7107-
	55 430	METER SET	FB01-55-430B	1	MILE/KM A/T, W/O TURBO	
			FB02-55-430B	1	MILE/KM M/T, W/O TURBO	
			FB44-55-430	1	MILE/KM M/T, TURBO	-7601
		<A>	FB44-55-430A	1	MILE KM M T TURBO	7601-
	55 435	CORD, METER SET	FB01-55-435A	1	W O TURBO	
			FB44-55-435	1	TURBO	
	55 437A	GROMMET, KNOB-METER SET	FB01-55-437	1		7601-
	55 441A	CASE, METER	FB01-55-441	1		
	55 442	PLATE NO 1, PRINT	FB02-55-442	1	MILE KM M T	
	55 444B	LENS, WARNING	FB01-55-444	2		
	55 446A	PLATE, WINDOW	FB01-55-488	1		
	55 448A	LENS, FRONT	FB01-55-447A	1	MILE KM	
	55 451E	METER, BOOST & OIL	FB44-55-451	1	MILE KM TURBO	
	55 461	TACHOMETER	FB02-55-461	1	MILE KM M T	
	55 471	SPEEDOMETER	FB01-55-471A	1	MILE/KM W O TURBO	
			FB44-55-471A	1	MILE/KM TURBO	
	55 472	KNOB, TRIPMETER	1707-75-102A	1		
	55 488B	SHADOW, LIGHT GUIDE	FB01-55-488	1		5C11-
	55 489A	PLATE, LIGHT GUIDE-METER	FB01-55-489	1		
	55 491A	METER, FUEL & THERMO	FB01-55-481	1		
	55 491C	METER, OIL & VOLTAGE	FB01-55-491	1	MILE K'A W O TURBO	

5C11 FC33* -120343
7107 FC33* -528767
7601 FC33* -550168

SECTION INDEX -- BODY

STARTING LOCATION	SECT NO	SECTION NAME
2 - C 3	0900A	KEY SETS
2 - E 3	5000	FRONT BUMPER
2 - F 3	5005	RADIATOR GRILLE
2 - G 3	5010A	REAR BUMPER
2 - H 3	5030A	WINDOW MOULDINGS
2 - I 3	5040A	BODY MOULDINGS
2 - J 3	5060A	SIDE PROTECTORS
2 - K 3	5100	HEAD LAMPS
2 - L 3	5103	HEAD LAMP RETRACTORS
2 - M 3	5105	FRONT COMBINATION LAMPS
2 - C 4	5110A	REAR COMBINATION LAMPS
2 - E 4	5120	LICENSE LAMPS
2 - F 4	5125	INTERIOR LAMPS
2 - G 4	5130	OVERHEAD CONSOLE (COUPE)
2 - H 4	5170	ORNAMENTS
2 - I 4	5180	COWL & EXTRACTOR GILLES
2 - K 4	5230	HOOD
2 - L 4	5260	TRUNK LID (CONVERTIBLE)
2 - M 4	5310	BODY PANELS (FRONT) (COUPE)
2 - N 4	5310A	BODY PANELS (FRONT) (CONVERTIBLE)
2 - C 5	5320	BODY PANELS (FENDER & WHEEL APRON) (COUPE)
2 - D 5	5320B	BODY PANELS (FENDER & WHEEL APRON) (CONVERTIBLE)
2 - E 5	5330	BODY PANELS (DASH & COWL PANEL)
2 - F 5	5340A	BODY PANELS (SIDE) (COUPE)
2 - H 5	5340AA	BODY PANELS (SIDE) (CONVERTIBLE)
2 - K 5	5360A	BODY PANELS (ROOF) (COUPE)
2 - L 5	5370	BODY PANELS (FLOOR) (COUPE)
2 - M 5	5370A	BODY PANELS (FLOOR) (CONVERTIBLE)
2 - C 6	5390	FLOOR ATTACHMENTS (COUPE)
2 - E 6	5390A	FLOOR ATTACHMENTS (CONVERTIBLE)
2 - G 6	5500	DASHBOARD EQUIPMENTS (COUPE) (W O ANTI-LOCK BRAKE SYSTEM)
2 - I 6	5500A	DASHBOARD EQUIPMENTS (COUPE) (ANTI-LOCK BRAKE SYSTEM)
2 - J 6	5500B	DASHBOARD EQUIPMENTS (CONVERTIBLE)
2 - K 6	5520	METER HOOD
2 - L 6	5530	SPEEDOMETER CABLE
2 - M 6	5540	METER COMPONENTS (COUPE) (W O ANTI-LOCK BRAKE SYSTEM)
2 - C 7	5540A	METER COMPONENTS (COUPE) (ANTI-LOCK BRAKE SYSTEM)
2 - E 7	5540B	METER COMPONENTS (CONVERTIBLE)
2 - F 7	5560	DASHBOARD & RELATED PARTS
2 - I 7	5570	CONSOLE
2 - K 7	5580	VENTILATOR
2 - C 8	5700A	FRONT SEATS (COUPE)
2 - C 9	5700AA	FRONT SEATS (COUPE) (LEATHER)
2 - C10	5700AB	FRONT SEATS (CONVERTIBLE) (CLOTH)
2 - F10	5700AC	FRONT SEATS (CONVERTIBLE) (LEATHER)
2 - J10	5750A	REAR SEATS (CLOTH)
2 - C11	5750AA	REAR SEATS (LEATHER)
2 - H11	5790A	SEAT BELTS
2 - J11	5800A	FRONT DOORS (COUPE)
2 - K11	5800AA	FRONT DOORS (CONVERTIBLE)
2 - C12	5830A	FRONT DOOR MECHANISMS (COUPE)
2 - H12	5830AA	FRONT DOOR MECHANISMS (CONVERTIBLE)
2 - C13	5840A	FRONT DOOR TRIMS & RELATED PARTS (COUPE)
2 - K13	5840AB	FRONT DOOR TRIMS & RELATED PARTS (CONVERTIBLE)
2 - N13	6100	HEATER
2 - C14	6110	HEATER UNIT COMPONENTS
2 - D14	6115	HEATER CONTROLS COMPONENTS
2 - E14	6120	HEATER BLOWER COMPONENTS
2 - F14	6130	AIR CONDITIONER (W O AIR CONDITIONER)
2 - G14	6132A	CONDENSER PACKAGE
2 - I14	6142A	COMPRESSOR MOUNTING KIT COMPRESSOR CLUTCH ASSEMBLY & REPAIR PARTS
2 - J14	6152A	EVAPORATOR PACKAGE
2 - K14	6200	LIFT GATE
2 - L14	6230	LIFT GATE MECHANISMS (COUPE)
2 - N14	6300A	WINDOW GLASSES
2 - C15	6330	SUNROOF (COUPE)
2 - E15	6330A	SOFT TOP (CONVERTIBLE)
2 - G15	6600B	SWITCHES & RELAYS (ENGINE) (W O TURBO)
2 - J15	6600BA	SWITCHES & RELAYS (ENGINE) (TURBO)
2 - M15	6610	DASHBOARD SWITCHES (MANUAL OPERATING)
2 - N15	6611	COMBINATION SWITCH
2 - C16	6612	CLUSTER SWITCH
2 - D16	6615	POWER WINDOW SWITCHES
2 - E16	6620	DOOR SWITCH
2 - F16	6630	RELAYS & CPU (BODY)
2 - G16	6635	HORNS
2 - H16	6640	AUTO CRUISE CONTROL SYSTEM
2 - I16	6680	AUDIO SYSTEMS (RADIO & TAPE DECK)

5540A-1 METER COMPONENTS (COUPE) (ANTI-LOCK BRAKE SYSTEM)

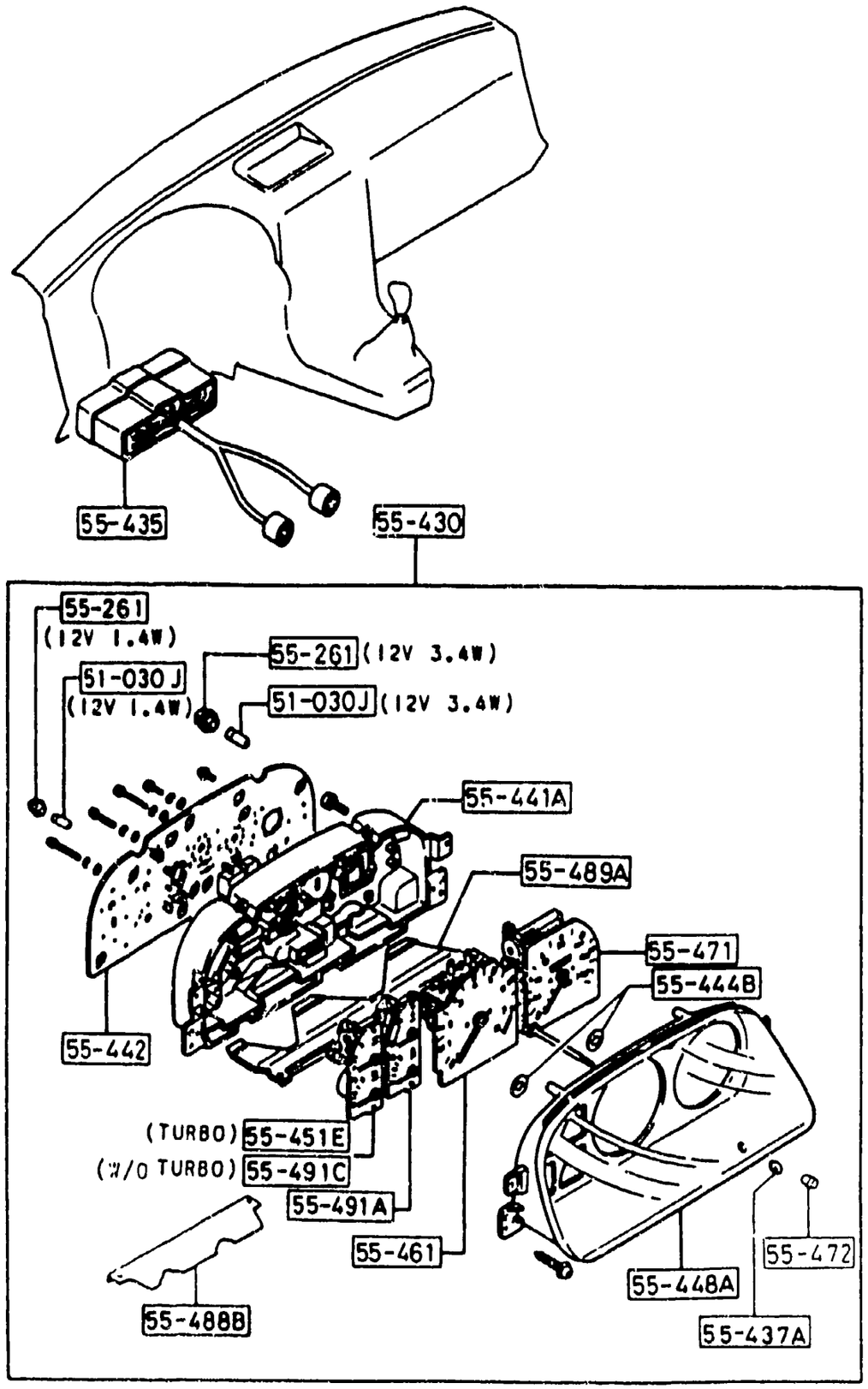

ITEM NO	D-CODE	DESCRIPTION	PART NO	QTY	MODEL/DESCRIPTION	REMARKS
	51 030J	BULB	0000-11-007A	1	12V 1.4W FOR WARNING	
			0000-11-0194	9	12V 3.4W	
	55 261	SOCKET	8548-55-261	1	12V 1.4W BLACK	
			1316-55-261	9	12V 3.4W	-7107
			8545-55-261	9	12V 3.4W	7107-
	55 430	METER SET	FB56-55-430B	1	MILE/KM A/T, W/O TURBO	
			FB02-55-430B	1	MILE/KM M/T, W/O TURBO	
			FB60-55-430	1	MILE/KM M/T, TURBO	
	55 435	CORD, METER SET	FB01-55-435A	1	M/T, W/O TURBO	
			FB44-55-435	1	A/T, W/O TURBO M/T, TURBO	
	55 437A	GROMMET, KNOB-METER SET	FB01-55-437	1		7601-
	55 441A	CASE, METER	FB01-55-441	1		
	55 442	PLATE NO. 1, PRINT	FB02-55-442	1	MILE/KM M/T, W/O TURBO	
			FB56-55-442	1	MILE/KM A/T, W/O TURBO M/T, TURBO	-6714
			FB58-55-442	1	MILE/KM A/T, W/O TURBO	6714-
	55 444B	LENS, WARNING	FB01-55-444	2		
	55 448A	LENS, FRONT	FB01-55-447A	1	MILE/KM	
	55 451E	METER, BOOST & OIL	FB44-55-451	1	MILE/KM TURBO	
	55 461	TACHOMETER	FB02-55-461	1	MILE/KM M/T, W/O TURBO M/T, TURBO	
	55 471	SPEEDOMETER	FB01-55-471A	1	MILE/KM W/O TURBO	
			FB44-55-471A	1	MILE/KM TURBO	
				1	USA (MILE/KM) (TURBO)	
	55 472	KNOB, TRIPMETER	1907-75-102A	1		
	55 488B	SHADOW, LIGHT GUIDE	FB01-55-488	1		
	55 489A	PLATE, LIGHT GUIDE-METER	FB01-55-489	1		
	55 491A	METER, FUEL & THERMO	FB01-55-481	1	M/T, W/O TURBO	
			FB56-55-481	1	A/T, W/O TURBO M/T, TURBO	
	55 491C	METER, OIL & VOLTAGE	FB01-55-491	1	MILE/KM M/T, W/O TURBO A/T, W/O TURBO	6901-

6714 FC33* -503142
6901 FC33* -512255
7107 FC33* -528767
7601 FC33* -550168

5540A-2 METER COMPONENTS (COUPE) (ANTI-LOCK BRAKE SYSTEM)

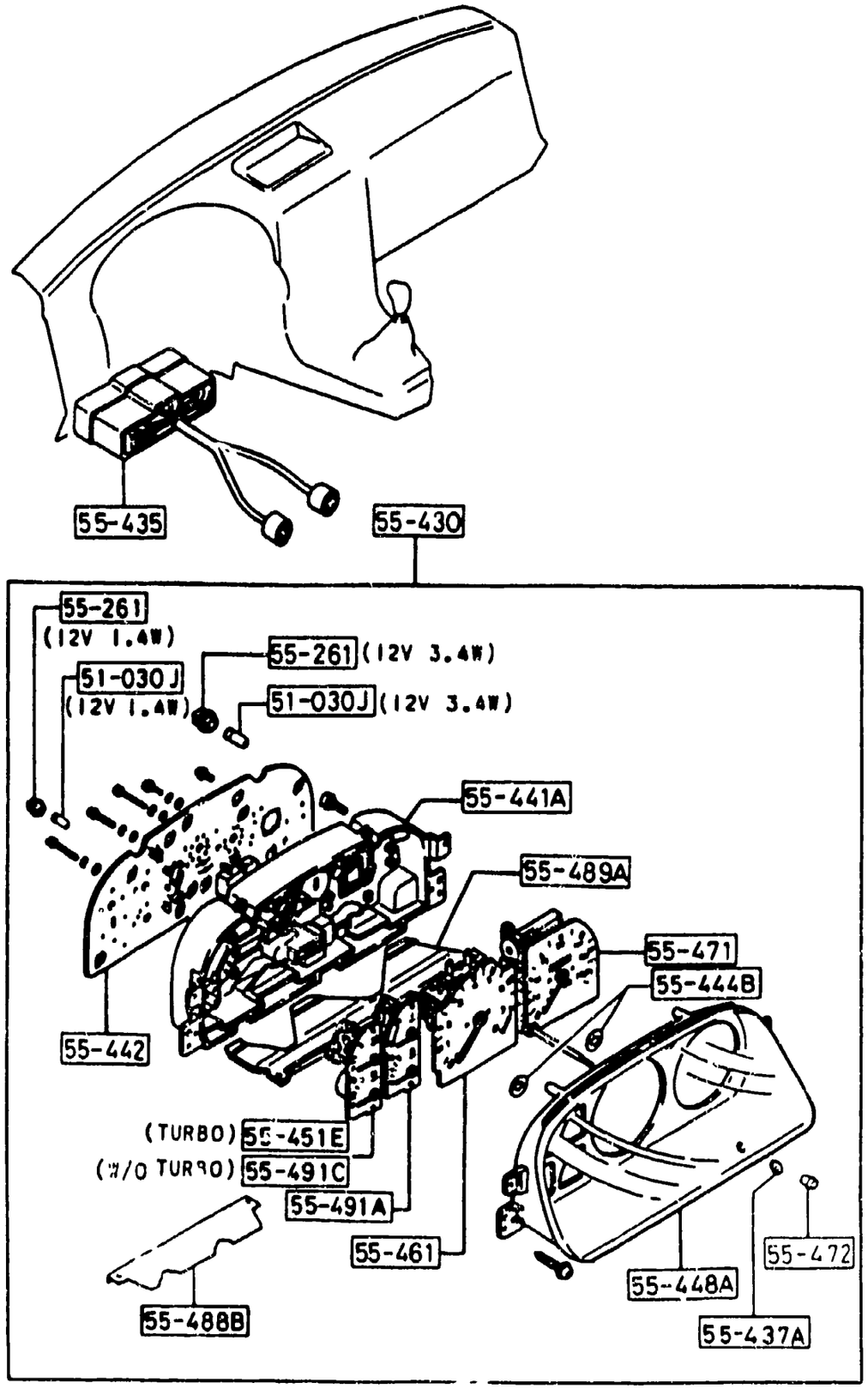

ITEM NO.	D-CODE	DESCRIPTION	PART NO.	QTY	MODEL/DESCRIPTION	REMARKS
	55 491C (CONT'D)			1	A/T, W/O TURBO	-6901

6901 FC33* -512255

55408-1 METER COMPONENTS (CONVERTIBLE)

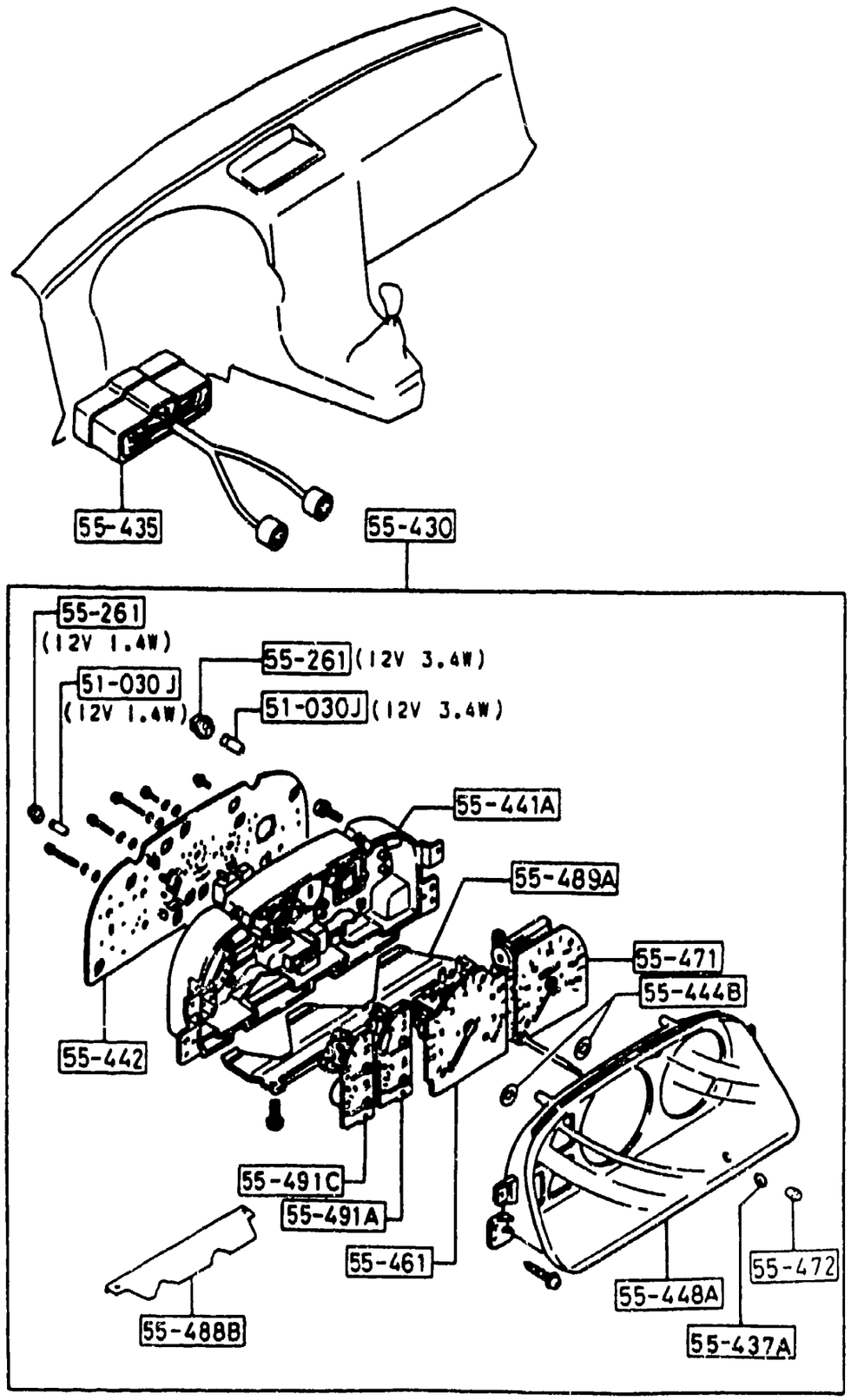

ITEM NO.	D-CODE	DESCRIPTION	PART NO.	QTY	MODEL/DESCRIPTION	REMARKS
	51 030J	BULB	0000-11-0074	1	12V 1.4W FOR WARNING	
			0000-11-0194	9	12V 3.4W	
	55 261	SOCKET	8545-55-261	9	12V 3.4W	
			8548-55-261	1	12V 1.4W BLACK	
	55 430	METER SET	FB02-55-430B	1	MILE/KM	
	55 435	CORD, METER SET	FB01-55-435A	1		
	55 437A	GROMMET, KNOB-METER SET	FB01-55-437	1		
	55 441A	CASE, METER	FB01-55-441	1		
	55 442	PLATE NO. 1, PRINT	FB02-55-442	1	MILE/KM	
	55 444B	LENS, WARNING	FB01-55-444	2		
	55 448A	LENS, FRONT	FB01-55-447A	1	MILE/KM	
	55 461	TACHOMETER	FB02-55-461	1	MILE/KM	
	55 471	SPEEDOMETER	FB01-55-471A	1	MILE/KM	
	55 472	KNOB, TRIPMETER	1907-75-102A	1		
	55 488B	SHADOW, LIGHT GUIDE	FB01-55-488	1		
	55 489A	PLATE, LIGHT GUIDE-METER	FB01-55-489	1		
	55 491A	METER, FUEL & THERMO	FB01-55-481	1		
	55 491C	METER, OIL & VOLTAGE	FB01-55-491	1	MILE/KM	

5560-1 DASHBOARD & RELATED PARTS

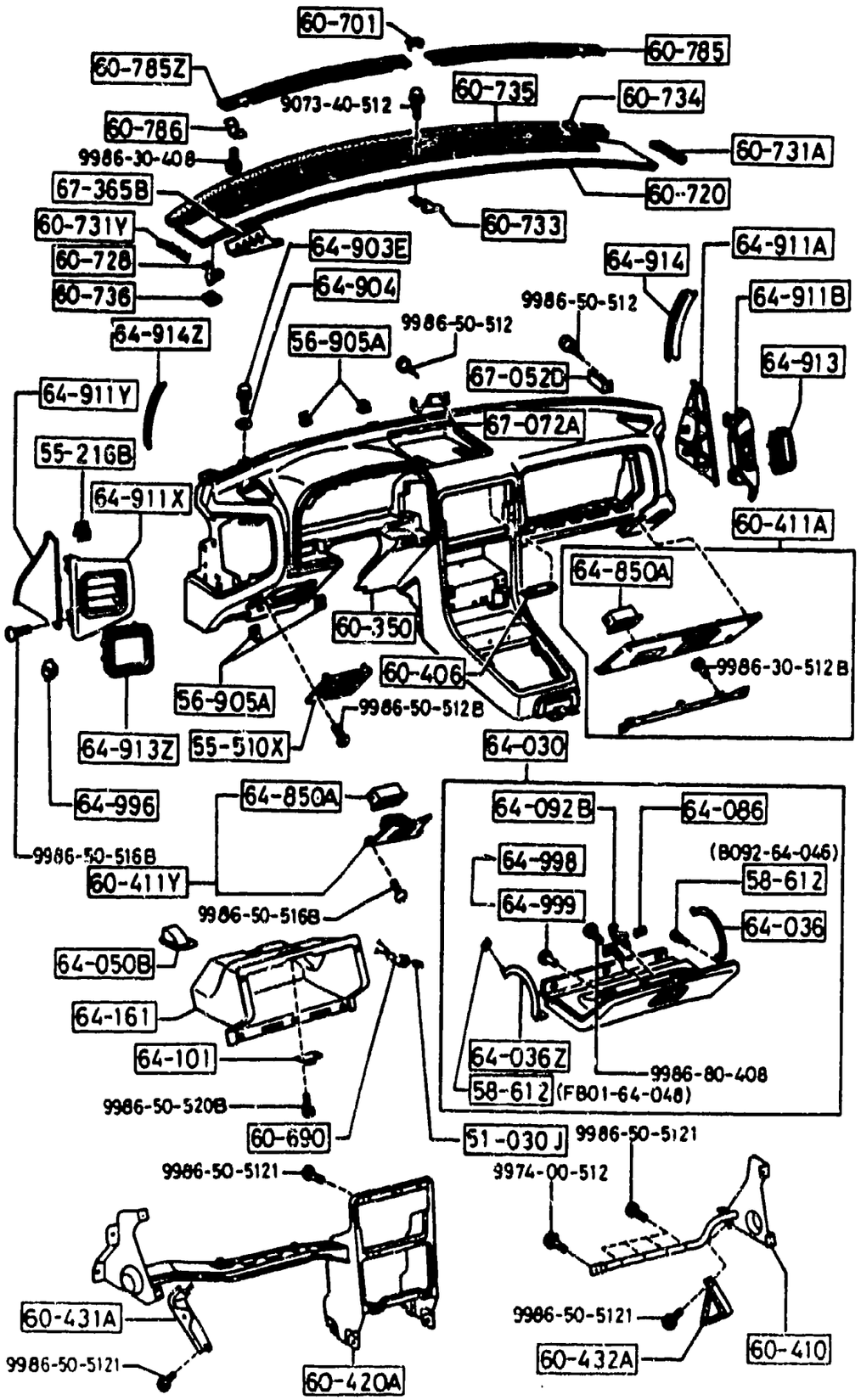

ITEM NO.	D-CODE	DESCRIPTION	PART NO.	QTY	MODEL/DESCRIPTION	REMARKS
	51 030J	BULB	0000-11-0194	1	12V 3.4W	
	55 216B	SPRING, CENTER PANEL	B092-55-257	4		
	55 510X	GRILLE (L), SPEAKER	FB01-60-821	1		
		DARK GRAY	07			
		RED	10			
		BLUE	48			
	56 905A	NUT, SPRING	B092-60-408	24		
	58 612	CUSHION, RUBBER	B092-64-046	2		
			FB01-64-048	2		
	60 350	PAD, CRUSH	FB01-60-350E	1	W/O VENT.	
	60 406	BRACKET, CENTER PANEL	FB01-55-216A	1		
	60 410	FRAME, INSTRUMENT PANEL	FB01-60-520B	1	COUPE	
	60 411A	PANEL (R), LOWER	FB01-64-250B	1		
		DARK GRAY	07			
		RED	10			
		BLUE	48			
	60 411Y	PANEL (L), LOWER	FB01-64-270A	1		
		DARK GRAY	07			
		RED	10			
		BLUE	48			
	60 420A	FRAME, INSTRUMENT	FB67-60-420C	1	CONV.	
			FB01-60-420G	1	COUPE	
	60 431A	BRACKET NO. 1	FB01-60-634	2		-5C01
			FB01-60-634A	2		5C01-
	60 432A	BRACKET NO. 2	FB01-60-635	1		
	60 690	SWITCH, GLOVE TRAY	FA54-66-540	1		
	60 701	CAP, GARNISH	FB01-64-905	1		
		DARK GRAY	07			
		RED	10			
		BLUE	48			
	60 720	GARNISH, U [illegible]	FB01-60-720A	1		
		DARK GRAY	07			
		RED	10			
		BLUE	48			
	60 728	CLIP, GARNISH-INSTRUMENT	FB01-60-728A	6		
	60 731A	COVER (R), GARNISH-INSTRUMENT	FB01-60-731A	1		
		DARK GRAY	07			
		RED	10			
		BLUE	48			
	60 731Y	COVER (L), GARNISH-INSTRUMENT	FB01-60-732A	1		

5C01 FC33* -118628

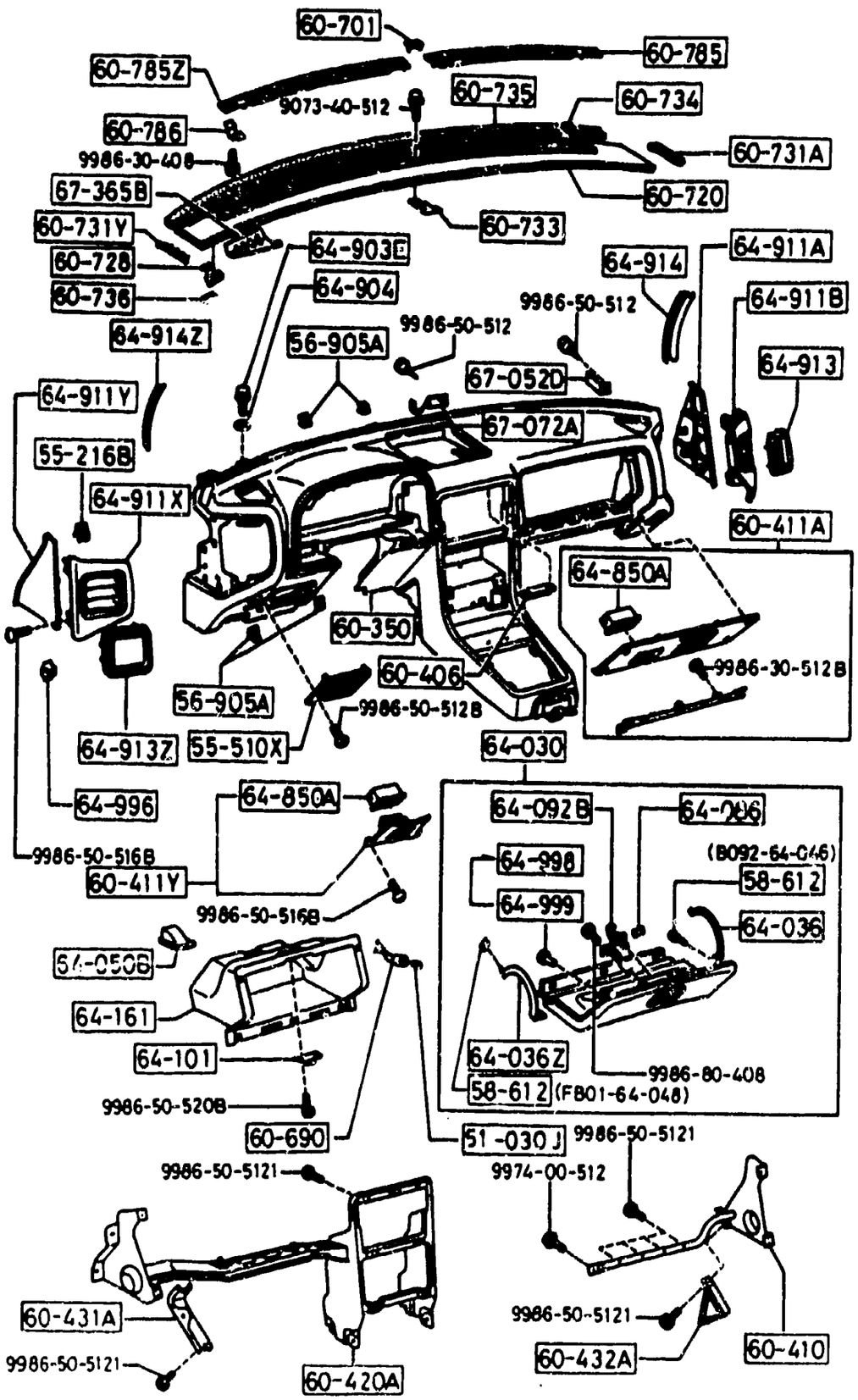

ITEM NO.	D-CODE	DESCRIPTION	PART NO.	QTY	MODEL/DESCRIPTION	REMARKS
	60 731Y (CONT'D)	DARK GRAY	07			
		RED	10			
		BLUE	48			
	60 733	BRACKET, GARNISH-INSTRUMENT	FB01-60-733	1		
	60 734	PAD NO. 1, GARNISH-UPPER	FB01-60-734A	4		
	60 735	PAD NO. 2, GARNISH-UPPER	FB01-60-735	1		
	60 736	RUBBER, CUSHION-GARNISH	FB01-60-736	6		7101-
	60 785	GRILLE (R), DEFROSTER NOZZLE	FB01-60-785A	1		
		DARK GRAY	07			
		RED	10			
		BLUE	48			
	60 785Z	GRILLE (L), DEFROSTER NOZZLE	FB01-60-795A	1		
		DARK GRAY	07			
		RED	10			
		BLUE	48			
	60 786	CLIP, DEFROSTER GRILLE	FB01-60-786A	4		
	64 030	LID, GLOVE POCKET	FB01-64-030	1		
		DARK GRAY	07			
		RED	10			
		BLUE	48			
	64 036	STOPPER (R) GLOVE LID	FB01-64-043	1		
	64 036Z	STOPPER (L), GLOVE LID	FB01-64 044	1		
	64 050B	BOX, BULB	H043-64-050	1		
	64 086	SPRING, GLOVE LID	FA54-64-044	1		
	64 092B	HOOK, GLOVE LID	FB01-64-045	1		
	64 101	STRIKER	FB01-64-101	1		
	64 161	TRAY, GLOVE LID	FB01-64-161A	1	STD., SE	
			FB02-64-161A	1	GXL, TURBO	
	64 850A	LOUVER, LAP-LOWER PAN	FB01-64-850	2		
		DARK GRAY	07			
		RED	10			
		BLUE	48			
	64 903E	BOLT	BE32-64-903	2		
	64 904	WASHER, RUBBER	BE32-64-904	2		
	64 911A	COVER (R), SIDE	FB01-64-912	1		
		DARK GRAY	07			
		RED	10			
		BLUE	48			
	64 911B	PANEL (R), SIDE-CRUSH PAD	FB01-64-911A	1		
		DARK GRAY	07			

7101 FC?3* -528625

5560-3 DASHBOARD & RELATED PARTS

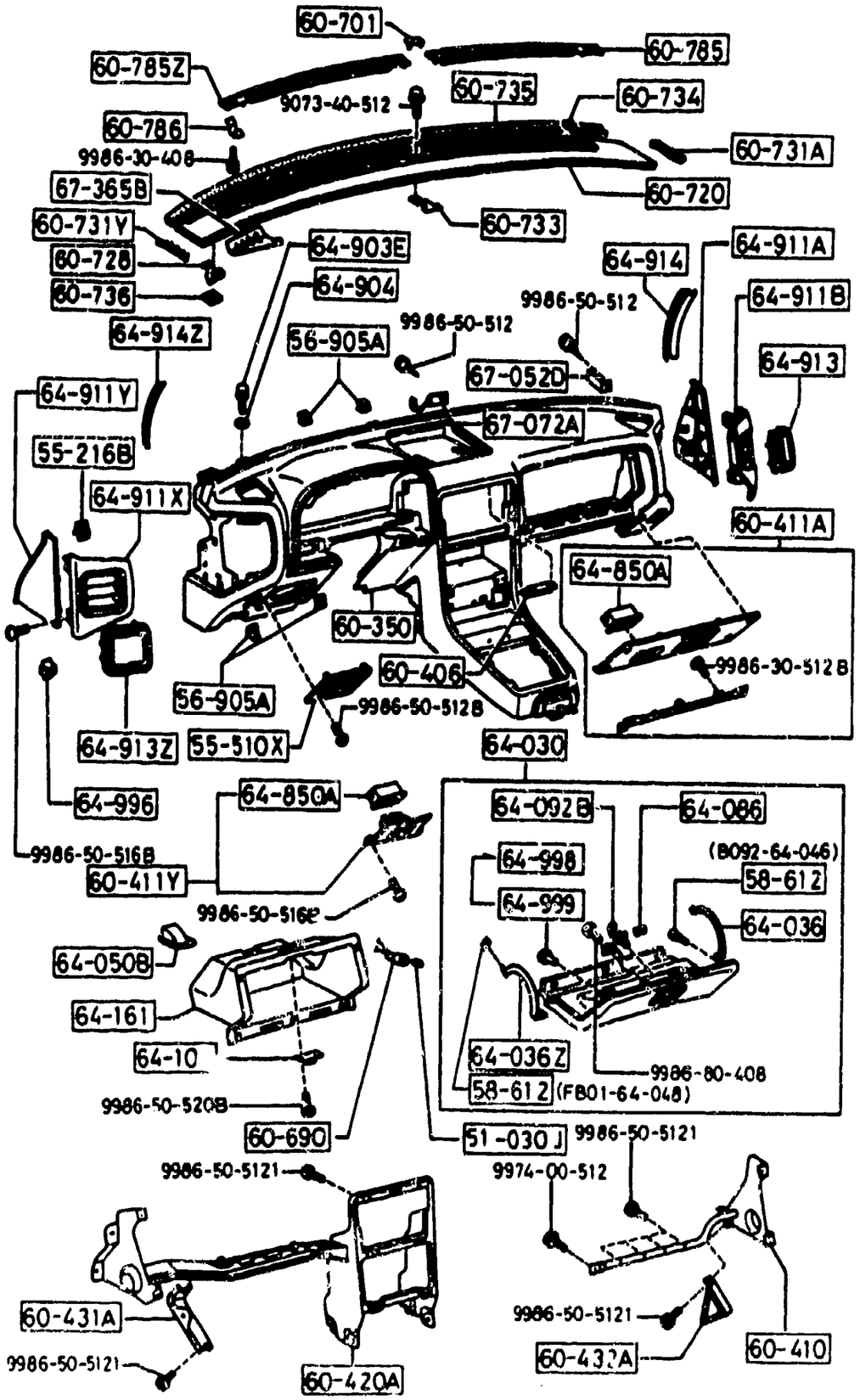

ITEM NO.	D-CODE	DESCRIPTION	PART NO.	QTY	MODEL/DESCRIPTION	REMARKS
	64 911B (CONT'D)	RED	10			
		BLUE	48			
	64 911X	PANEL (L), SIDE-CRUSH PAD	FB01-64-921A	1		
		DARK GRAY	07			
		RED	10			
		BLUE	48			
	64 911Y	COVER (L), SIDE	FB01-64-922	1		
		DARK GRAY	07			
		RED	10			
		BLUE	48			
	64 913	RUBBER (R), SEAL-SIDE PANEL	FB01-64-913	1		
	64 913Z	RUBBER (L), SEAL-SIDE PANEL	FB01-64-923	1		
	64 914	COVER (R), SIDE NO. 2	FB01-64-914	1		
		DARK GRAY	07			
		RED	10			
		BLUE	48			
	64 914Z	COVER (L), SIDE NO. 2	FB01-64-924	1		
		DARK GRAY	07			
		RED	10			
		BLUE	48			
	64 996	NUT, EXPANSION	H043-64-996A	13		
	64 998	SCREW, GLOVE LID	H199-64-998	10		5A01-
	64 999	SCREW, GLOVE LID	H199-64-999	10		-5A01
	47 052D	CLIP	8545-67-052	2		
	67 072A	CLIP	GC77-67-072	2		
	67 365B	COVER, SEAL	FB34-67-365	1		

5A01 FC33* -107570

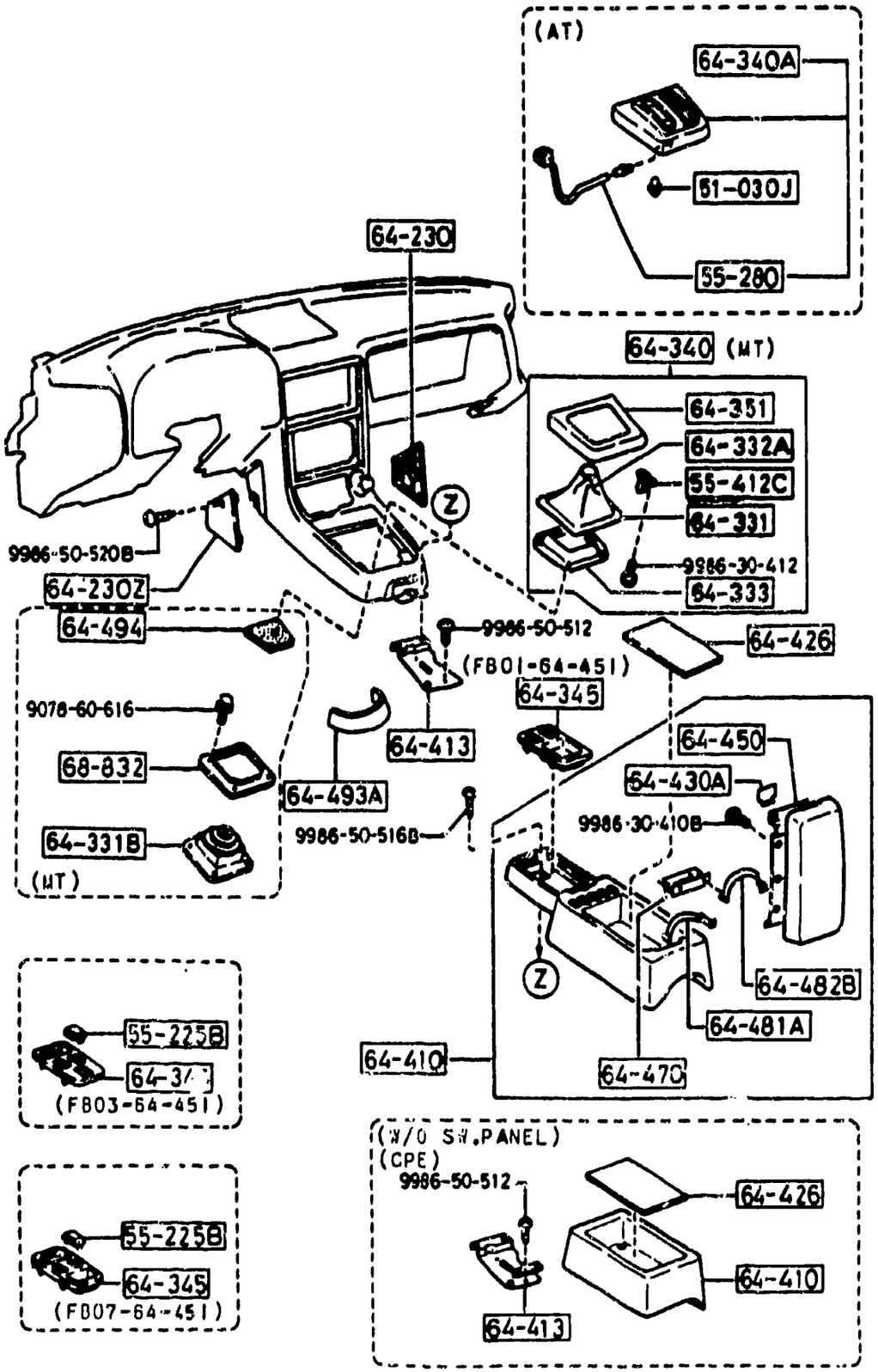

ITEM NO.	D-CODE	DESCRIPTION	PART NO.	QTY	MODEL/DESCRIPTION	REMARKS
	51 030J	BULB	9000-11-0194	1	12V 3.4W A/T	
	55 225B	COVER, HOLE	8001-55-225A	1		
	55 280	BULB & SOCKET	G032-55-280A	1	A/T	
	55 412C	SPRING	8531-55-412	4	M/T	
	64 230	WALL (R), SIDE	FB01-64-221A	1		
		DARK GRAY	07			
		RED	10			
		BLUE	48			
	64 230Z	WALL (L), SIDE	FB01-64-231A	1		
		DARK GRAY	07			
		RED	10			
		BLUE	48			
	64 331	BOOT, CHANGE	FB01-64-331A	1	M/T	
	64 331B	BOOT, CHANGE	FB01-64-490B	1	M/T	
	64 340	PLATE, UPPER	FB01-64-350C	1	M/T	
	64 340A	INDICATOR	FB02-64-350F	1	A/T	
	64 345	PANEL, SWITCH	FB01-64-451	1	W/O DOOR MIRROR SW.	
			FB03-64-451	1	W/ DOOR MIRROR SW. & COIN BOX	
			FB07-64-451	1	W/ DOOR MIRROR SW. A.A.S. SW. & SPKR. CONT. SW.	
	64 410	CONSOLE, REAR	FB03-64-411	1	W/O SW. PANEL	
		DARK GRAY	07			
		RED	10			
		BLUE	48			
			FB01-64-410C	1	STD., SE W/ SWITCH PANEL	
		DARK GRAY	07			
		RED	10			
		BLUE	48			
			FB02-64-410C	1	GXL, TURBO	
		DARK GRAY	07			
		RED	10			
		BLUE	48			
	64 413	BRACKET, CONSOLE-NO. 1	FB01-64-44X	1	W/ SWITCH PANEL	
	64 426	MAT, CONSOLE-REAR	FB01-64-425	1	W/ SWITCH PANEL	
	64 430A	LOCK, CONSOLE-REAR	FB01-64-430	1	W/ SWITCH PANEL	
	64 450	LID, CONSOLE	FB01-64-440B	1	W/ SWITCH PANEL	
		DARK GRAY	07			
		RED	10			

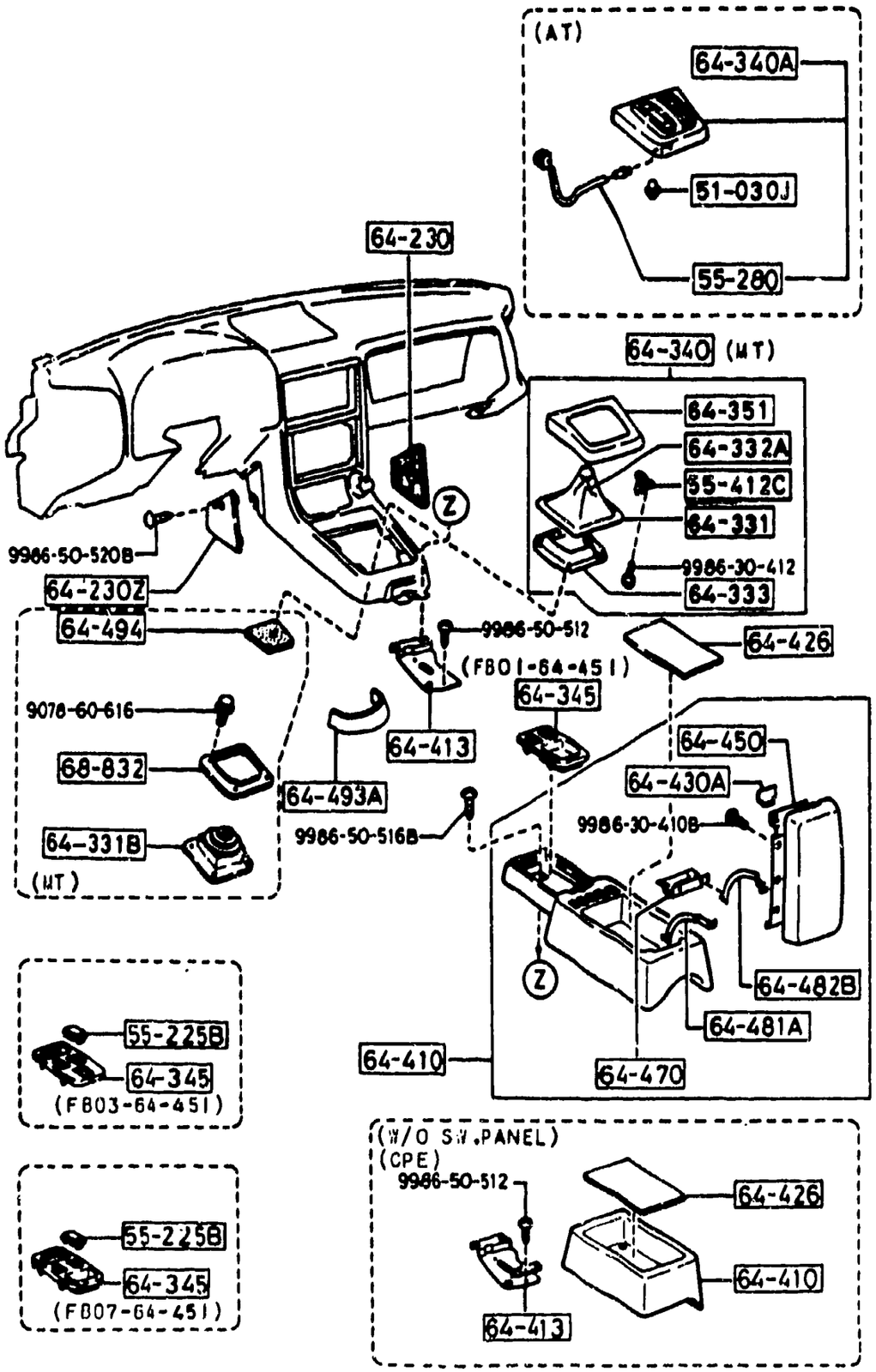

ITEM NO.	D-CODE	DESCRIPTION	PART NO.	QTY	MODEL/DESCRIPTION	REMARKS
	64 450 (CONT'D)	BLUE	48			
	64 470	HINGE	FB01-64-45X	1	W/ SWITCH PANEL	
		DARK GRAY	07			
		RED	10			
		BLUE	48			
	64 481A	STOPPER, CONSOLE LID	FB01-64-452	1	W/ SWITCH PANEL	
	64 482B	STOPPER, CONSOLE LID	FB01-64-453	1	W/ SWITCH PANEL	
	64 493A	PACK, SILENT	H001-64-493	1		
	64 494	PAD, CHANGE BOOT	FB01-64-495	1	M/T	
	68 832	SHEET, BOOT	FB01-64-491	1	M/T	

5580-1 VENTILATOR

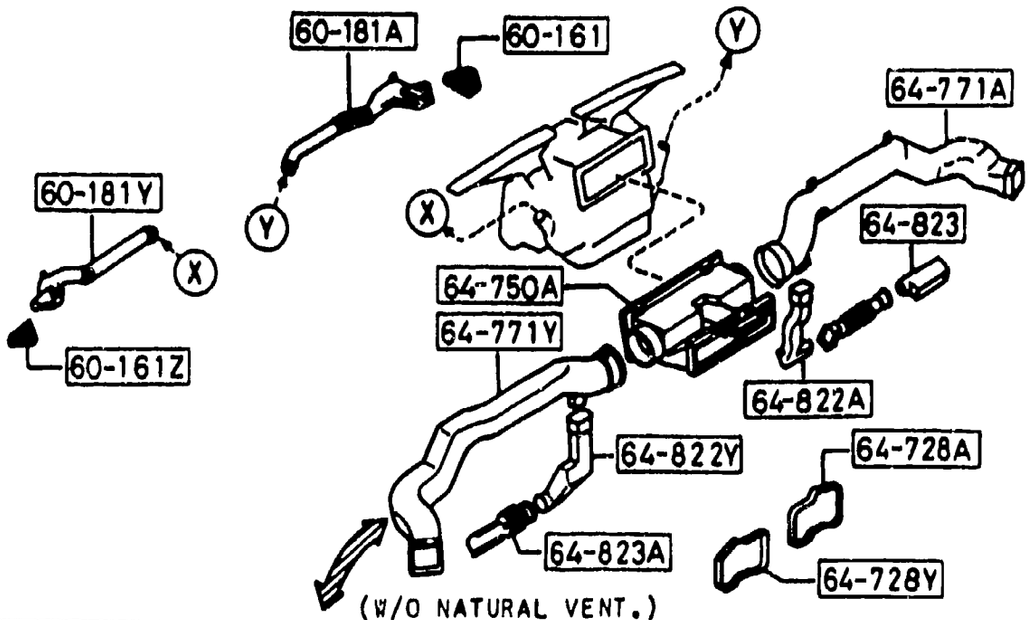

(FOR NATURAL VENT.)
(CPE)

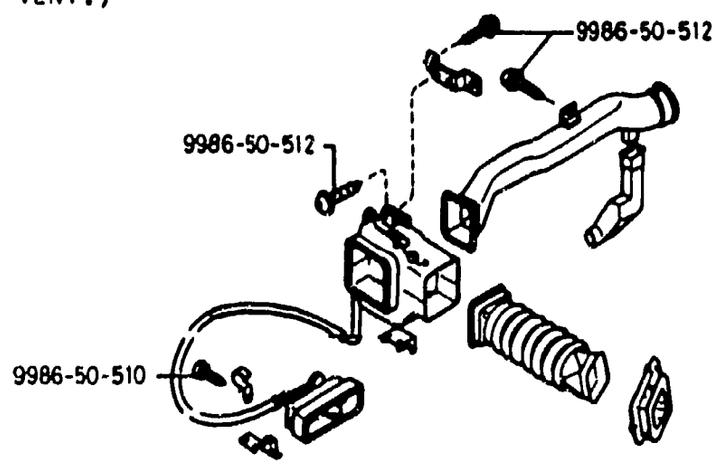

ITEM NO.	D-CODE	DESCRIPTION	PART NO	QTY	MODEL/DESCRIPTION	REMARKS
	60 161	GRILLE (R), DEMISTER	FB01-60-161A	1		
		DARK GRAY	07			
		RED	10			
		BLUE	48			
	60 161Z	GRILLE (L), DEMISTER	FB01-60-171A	1		
		DARK GRAY	07			
		RED	10			
		BLUE	48			
	60 181A	DUCT (R), SIDE DEMISTER	FB01-60-181	1		
	60 181Y	DUCT (L), SIDE DEMISTER	FB01-60-191	1		
	64 728A	GASKET (R)	FB01-64-728	1		
	64 728Y	GASKET (L)	FB01-64-828	1		
	64 750A	DUCT, CENTER	FB01-61-161	1		
	64 771A	DUCT NO. 1 (R)	FB01-64-760	1		
	64 771Y	DUCT NO. 1 (L)	FB01-64-770	1		
	64 822A	DUCT NO. 1 (R), VENTILATOR	FB01-64-822	1		
	64 822Y	DUCT NO. 1 (L), LAP-VENTILATOR	FB01-64-832A	1		
	64 823	DUCT NO. 2 (R), LAP-VENTILATOR	FB01-64-823	1		
	64 823A	DUCT NO. 2 (L), LAP-VENTILATOR	FB01-64-833	1		

SECTION INDEX -- BODY

STARTING LOCATION	SECT NO	SECTION NAME
2 - C 3	0900A	KEY SETS
2 - E 3	5000	FRONT BUMPER
2 - F 3	5005	RADIATOR GRILLE
2 - G 3	5010A	REAR BUMPER
2 - H 3	5030A	WINDOW MOULDINGS
2 - I 3	5040A	BODY MOULDINGS
2 - J 3	5060A	SIDE PROTECTORS
2 - K 3	5100	HEAD LAMPS
2 - L 3	5103	HEAD LAMP RETRACTORS
2 - M 3	5105	FRONT COMBINATION LAMPS
2 - C 4	5110A	REAR COMBINATION LAMPS
2 - E 4	5120	LICENSE LAMPS
2 - F 4	5125	INTERIOR LAMPS
2 - G 4	5130	OVERHEAD CONSOLE (COUPE)
2 - H 4	5170	ORNAMENTS
2 - I 4	5180	COWL & EXTRACTOR GILLES
2 - K 4	5230	HOOD
2 - L 4	5260	TRUNK LID (CONVERTIBLE)
2 - M 4	5310	BODY PANELS (FRONT) (COUPE)
2 - N 4	5310A	BODY PANELS (FRONT) (CONVERTIBLE)
2 - C 5	5320	BODY PANELS (FENDER & WHEEL APRON) (COUPE)
2 - D 5	5320B	BODY PANELS (FENDER & WHEEL APRON) (CONVERTIBLE)
2 - E 5	5330	BODY PANELS (DASH & COWL PANEL)
2 - F 5	5340A	BODY PANELS (SIDE) (COUPE)
2 - H 5	5340AA	BODY PANELS (SIDE) (CONVERTIBLE)
2 - P 5	5360A	BODY PANELS (ROOF) (COUPE)
2 - L 5	5370	BODY PANELS (FLOOR) (COUPE)
2 - M 5	5370A	BODY PANELS (FLOOR) (CONVERTIBLE)
2 - C 6	5390	FLOOR ATTACHMENTS (COUPE)
2 - E 6	5390A	FLOOR ATTACHMENTS (CONVERTIBLE)
2 - G 6	5500	DASHBOARD EQUIPMENTS (COUPE) (W O ANTI-LOCK BRAKE SYSTEM)
2 - I 6	5500A	DASHBOARD EQUIPMENTS (COUPE) (ANTI-LOCK BRAKE SYSTEM)
2 - J 6	5500B	DASHBOARD EQUIPMENTS (CONVERTIBLE)
2 - K 6	5520	METER HOOD
2 - L 6	5530	SPEEDOMETER CABLE
2 - M 6	5540	METER COMPONENTS (COUPE) (W O ANTI-LOCK BRAKE SYSTEM)
2 - C 7	5540A	METER COMPONENTS (COUPE) (ANTI-LOCK BRAKE SYSTEM)
2 - E 7	5540B	METER COMPONENTS (CONVERTIBLE)
2 - F 7	5560	DASHBOARD & RELATED PARTS
2 - I 7	5570	CONSOLE
2 - K 7	5580	VENTILATOR
2 - C 8	5700A	FRONT SEATS (COUPE)
2 - C 9	5700AA	FRONT SEATS (COUPE) (LEATHER)
2 - C10	5700AB	FRONT SEATS (CONVERTIBLE) (CLOTH)
2 - F10	5700AC	FRONT SEATS (CONVERTIBLE) (LEATHER)
2 - J10	5750A	REAR SEATS (CLOTH)
2 - C11	5750AA	REAR SEATS (LEATHER)
2 - H11	5790A	SEAT BELTS
2 - J11	5800A	FRONT DOORS (COUPE)
2 - K11	5800AA	FRONT DOORS (CONVERTIBLE)
2 - C12	5830A	FRONT DOOR MECHANISMS (COUPE)
2 - H12	5830AA	FRONT DOOR MECHANISMS (CONVERTIBLE)
2 - C13	5840A	FRONT DOOR TRIMS & RELATED PARTS (COUPE)
2 - K13	5840AB	FRONT DOOR TRIMS & RELATED PARTS (CONVERTIBLE)
2 - N13	6100	HEATER
2 - C14	6110	HEATER UNIT COMPONENTS
2 - D14	6115	HEATER CONTROLS COMPONENTS
2 - E14	6120	HEATER BLOWER COMPONENTS
2 - F14	6130	AIR CONDITIONER (W O AIR CONDITIONER)
2 - G14	6132A	CONDENSER PACKAGE
2 - I14	6142A	COMPRESSOR MOUNTING KIT COMPRESSOR CLUTCH ASSEMBLY & REPAIR PARTS
2 - J14	6152A	EVAPORATOR PACKAGE
2 - K14	6200	LIFT GATE
2 - L14	6230	LIFT GATE MECHANISMS (COUPE)
2 - N14	6300A	WINDOW GLASSES
2 - C15	6330	SUNROOF (COUPE)
2 - E15	6330A	SOFT TOP (CONVERTIBLE)
2 - G15	6600B	SWITCHES & RELAYS (ENGINE) (W O TURBO)
2 - J15	6600BA	SWITCHES & RELAYS (ENGINE) (TURBO)
2 - M15	6610	DASHBOARD SWITCHES (MANUAL OPERATING)
2 - N15	6611	COMBINATION SWITCH
2 - C16	6612	CLUSTER SWITCH
2 - D16	6615	POWER WINDOW SWITCHES
2 - E16	6620	DOOR SWITCH
2 - F16	6630	RELAYS & CPU (BODY)
2 - G16	6635	HORNS
2 - H16	6640	AUTO CRUISE CONTROL SYSTEM
2 - I16	6660	AUDIO SYSTEMS (RADIO & TAPE DECK)

(THIS ILLUSTRATION CONSISTS OF 4 PAGES)

SEAT TYPE / GRADE / SPECIFICATIONS		STB	
		STD-2-SEAT USA-SE-2-SEAT '87-SPORT-PKG CAN-GX-2-SEAT	
SEAT TRIM		(CLOTH "A") (-7701) 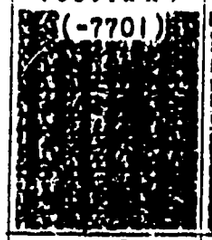	(CLOTH "A") (7701-) 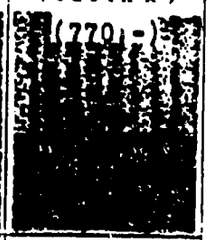
			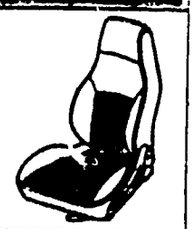
① SEAT BACK	HIGH	×	×
	LOW	–	–
② SWING PILLOW		–	–
DRIVER'S SEAT	③LUMBER SUPPORT	–	–
	④LIFTER	–	–
⑤ REAR SEAT		–	–

(THIS ILLUSTRATION CONSISTS OF 4 PAGES)

STC	STD	STS		STM
GXL-2-SEAT	GXL-4-SEAT	STD-4-SEAT SE-4-SEAT		SPORT-PKG TURBO USA-GTU
(CLOTH "B") 	(CLOTH "B") 	(CLOTH "A") (-7701) 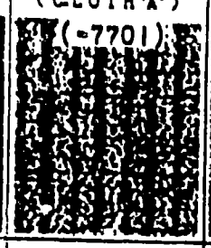	(CLOTH "A") (7701-) 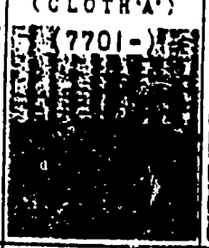	(CLOTH "C") 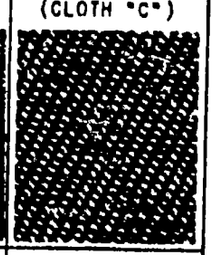
				
–	–	×	×	×
×	×	–	–	–
×	×	–	–	–
×	×	–	–	–
–	×	×	×	–

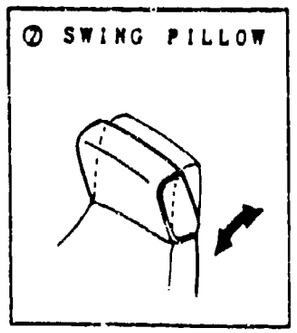

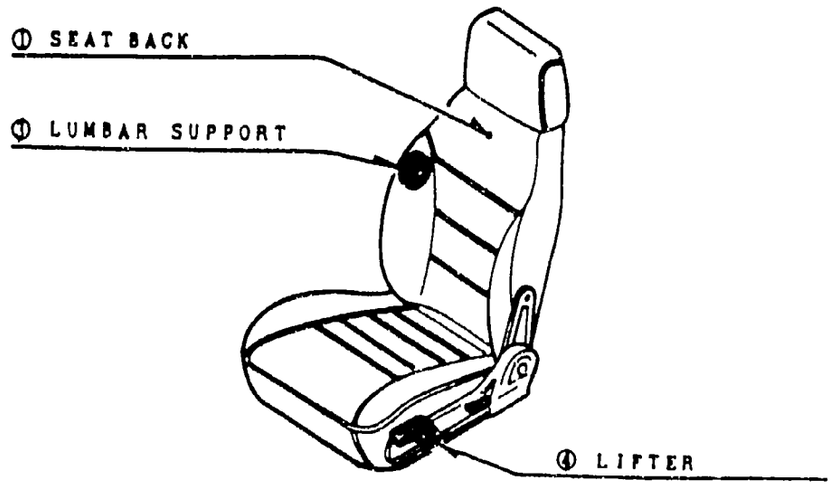

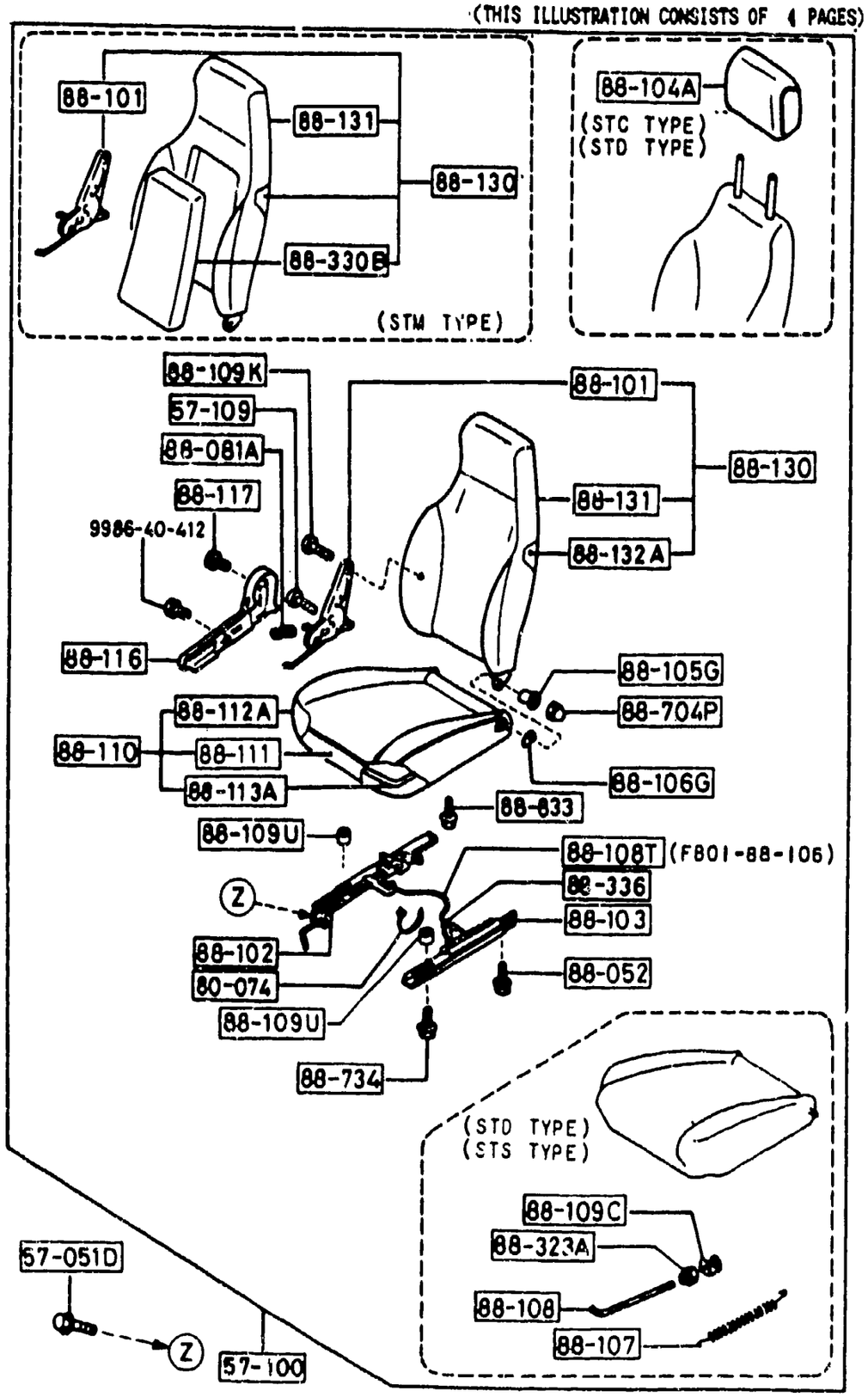
(THIS ILLUSTRATION CONSISTS OF 4 PAGES)
88-101
88-131
88-130
88-330B
(STM TYPE)
88-104A
(STC TYPE)
(STD TYPE)
88-109K
57-109
88-081A
88-117
9986-40-412
88-116
88-101
88-130
88-131
88-132A
88-105G
88-704P
88-106G
88-112A
88-110
88-111
88-113A
88-833
88-109U
88-108T (F801-88-105)
88-336
88-103
88-102
80-074
88-052
88-734
(STD TYPE)
(STS TYPE)
88-109C
88-323A
88-108
88-107
57-051D
Z
57-100

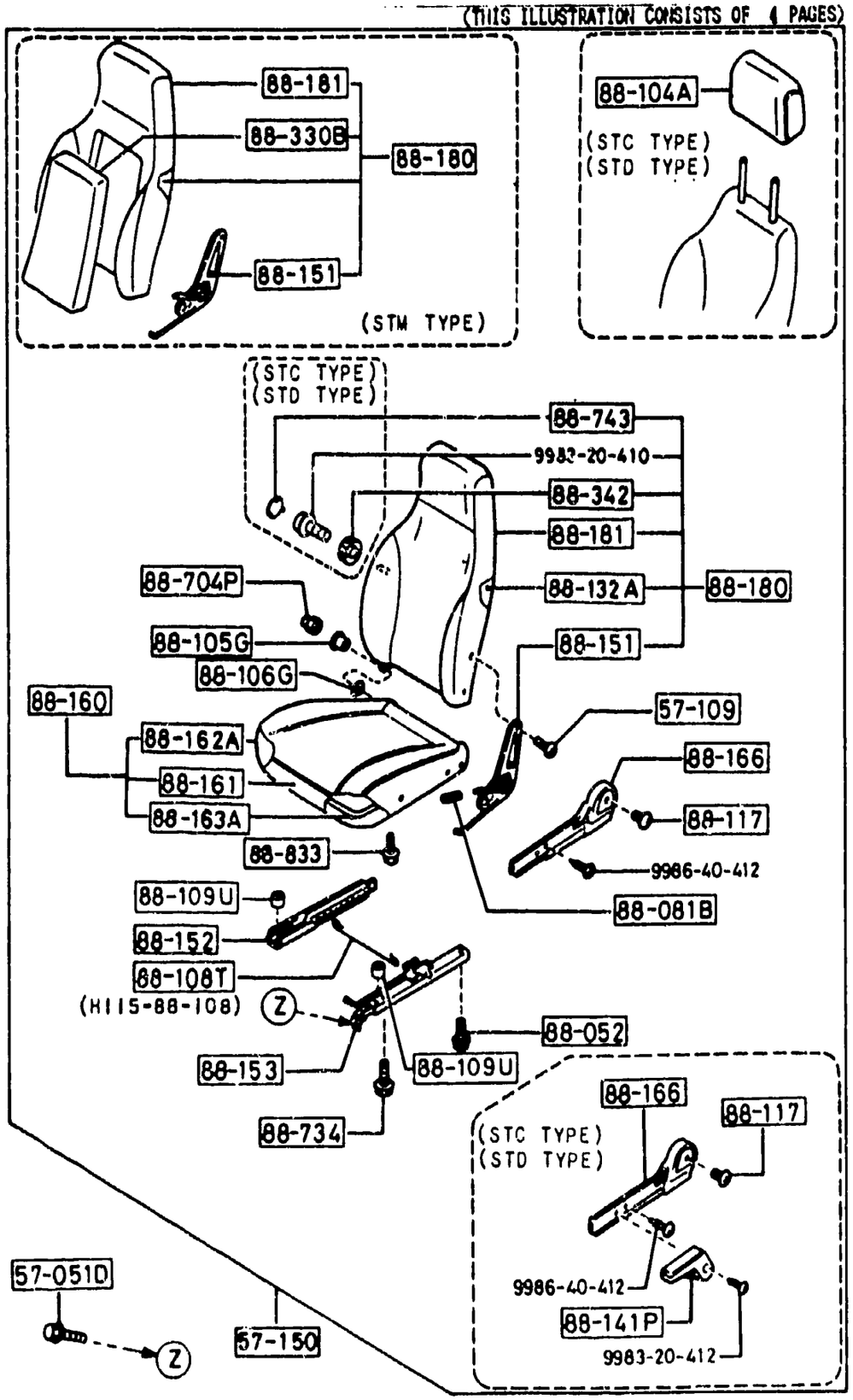
(THIS ILLUSTRATION CONSISTS OF 4 PAGES)
88-181
88-330B
88-180
88-151
(STM TYPE)
88-104A
(STC TYPE)
(STD TYPE)
(STC TYPE)
(STD TYPE)
88-743
9983-20-410
88-342
88-181
88-704P
88-132A
88-180
88-105G
88-106G
88-151
88-160
57-109
88-162A
88-166
88-161
88-163A
88-117
88-833
9986-40-412
88-081B
88-109U
88-152
88-108T
(H115-88-108)
88-052
88-153
88-109U
88-734
88-166
88-117
(STC TYPE)
(STD TYPE)
9986-40-412
88-141P
9983-20-412
57-051D
Z
57-150

5700A-3 FRONT SEATS (COUPE)

SEE ILLUSTRATION/S AT FRAME 2 - C 8

ITEM NO.	D-CODE	DESCRIPTION	PART NO.	QTY	MODEL/DESCRIPTION	REMARKS
	57 051D	BOLT, SET	UB40-57-05X	8		
	57 100	SEAT (R), FRONT	FB44-57-100A	1	SPT, TURBO STM TYPE	
		GRAY/DARK GRAY	07			
		RED	10			
		BLUE	48			
			FB02-57-100B	1	STD, SE, SPT. STB TYPE	
		DARK GRAY/GRAY	07			
		RED	10			
		BLUE	48			
			FB03-57-100B	1	GXL, 2-SEATER STC TYPE	
		DARK GRAY/GRAY	07			
		RED	10			
		BLUE	48			
			FB04-57-100B	1	GXL, 2 2 STD TYPE	
		DARK GRAY GRAY	07			
		RED	10			
		BLUE	48			
			FB08-57-100B	1	SE, 22 STS TYPE	
		DARK GRAY/GRAY	07	1		
		RED	10	1		
		BLUE	48			
	57 109	SCREW, KNUCKLE	0259-57-109	4		
	57 150	SEAT (L), FRONT	FB44-57-150A	1	SPT, TURBO STM TYPE	
		GRAY/DARK GRAY	07			
		RED	10			
		BLUE	48			
			FB02-57-150B	1	STD, SE, SPT STB, STS TYPE	
		DARK GRAY/GRAY	07			
		RED	10			
		BLUE	48			
			FB03-57-150B	1	GXL STC, STD TYPE	
		DARK GRAY GRAY	07			
		RED	10			
		BLUE	48			
	88 052	BOLT	B093-88-818	2	GXL STC, STD TYPE	

5700A-4 FRONT SEATS (COUPE)

SEE ILLUSTRATION/S AT FRAME 2 · C 8

ITEM NO	D-CODE	DESCRIPTION	PART NO.	QTY	MODEL/DESCRIPTION	REMARKS
	88 052 (CONT'D)			4	STD, SE, STP, TURBO STB, STM, STS TYPE	
	88 081A	KNOB (R), KNUCKLE	B001-88-081	1		
		DARK GRAY	09			
		RED	10			
		BLUE	48			
	88 081B	KNOB (L), KNUCKLE	B001-88-091	1		
		DARK GRAY	09			
		RED	10			
		BLUE	48			
	88 101	KNUCKLE (R), RECLINING	BF80-88-101	1	'87 SPT, SE 2-SEAT, GXL 2-SEAT STB, STC TYPE	
			BF82-88-101	1	SE 2 2, GXL 22 STD, STS TYPE	
			FB01-88-101	1	SPT. PKG., TURBO STM TYPE	
	88 102	ADJUSTER, NO. 1	FB01-88-102B	1	'87 SPT, SE 2-SEAT, GXL 2-SFAT STB, STC TYPE	
			FB04-88-102B	1	GXL 22, SE 22 STD, STS TYPE	
	88 103	ADJUSTER, NO. 2	FB01-88-103B	1		
	88 104A	RESTRAINT, HEAD	FB03-88-140	2	GXL STC, STD TYPE	
		DARK GRAY/GRAY	07			
		RED	10			
		BLUE	48			
	88 105G	BUSHING, HINGE	FB01-88-107	2		
	88 106G	WASHER, HINGE	FB01-88-105	2		
	88 107	SPRING, RETURN	F032-88-107	1	SE 22, GXL 22 STD, STS TYPE	
	88 108	ROD	FB04-88-109	1	SE 22, GXL 22 STD, STS TYPE	
			FB44-88-109	4	SPT. PKG., TURBO STM TYPE	
	88 108T	WIRE, RELEASE	FB01-88-106	1		
			H115-88-108	1		
	88 109C	STOPPER	8643-88-109	1	SE 22, GXL 22 STD, STS TYPE	
	88 109K	SCREW, KNUCKLE	B095-88-109	4		
	88 110	CUSHION (R), FRONT SEAT	FB44-88-110	1	SPT. PKG., TURBO STM TYPE	
		GRAY	07			

SEE ILLUSTRATION/S AT FRAME 2 - C 8

ITEM NO.	D-CODE	DESCRIPTION	PART NO.	QTY	MODEL/DESCRIPTION	REMARKS
	88 110 (CONT'D)	RED	10			
		BLUE	48			
			FB02-88-110A	1	SE STB, STS TYPE	
		DARK GRAY/GRAY	07			
		RED	10			
		BLUE	48			
			FB03-88-110A	1	GXL STC, STD TYPE	
		DARK GRAY/GRAY	07			
		RED	10			
		BLUE	48			
	88 111	TRIM (R), SEAT CUSHION	FB03-88-111	1	GXL STC, STD TYPE	
		DARK GRAY/GRAY	07			
		RED	10			
		BLUE	48			
			FB44-88-111	1	SPT. PKG., TURBO STM TYPE	
		GRAY	07			
		RED	10			
		BLUE	48			
			FB02-88-111	1	SE STB, STS TYPE	
		DARK GRAY/GRAY	07			
		RED	10			
		BLUE	48			
	88 116	COVER (R), KNUCKLE	F044-88-127A	1		
		DARK GRAY	07			
		RED	10			
		BLUE	48			
	88 117	SCREW, KNUCKLE	1243-88-117	2		
	88 130	BACK (R), FRONT SEAT	FB03-88-130	1	GXL 2-SEAT STC TYPE	
		DARK GRAY/GRAY	07			
		RED	10			
		BLUE	48			
			FB04-88-130	1	GXL, 2 2 STD TYPE	
		DARK GRAY/GRAY	07			
		RED	10			
		BLUE	48			

5700A-6 FRONT SEATS (COUPE)

SEE ILLUSTRATION/S AT FRAME 2 - C 8

ITEM NO.	D-CODE	DESCRIPTION	PART NO.	QTY	MODEL/DESCRIPTION	REMARKS
	88 130 (CONT'D)		FB44-88-130	1	SPT. PKG., TURBO STM TYPE	
		GRAY	07			
		RED	10			
		BLUE	48			
			FB02-88-130	1	'87 SPT, SE 2-SEAT STB TYPE	
		DARK GRAY/GRAY	07			
		RED	10			
		BLUE	48			
			FB08-88-130	1	SE 2 2 STS TYPE	
		DARK GRAY	07			
		RED	10			
		BLUE	48			
	88 131	TRIM (R), SEAT BACK	FB03-88-131	1	GXL STC, STD TYPE	
		DARK GRAY/GRAY	07			
		RED	10			
		BLUE	48			
			FB44-88-131	1	SPT, TURBO STM TYPE	
		GRAY	07			
		RED	10			
		BLUE	48			
			FB02-88-131	1	SE STB, STS TYPE	
		DARK GRAY/GRAY	07			
		RED	10			
		BLUE	48			
	88 141P	LEVER, LIFTER	FA58-88-831	1	GXL STC, STD TYPE	
		DARK GRAY	07			
		RED	10			
		BLUE	48			
	88 151	KNUCKLE (L), RECLINING	BF80-88-151	1	STD, SE, SPT. GXL STB, STC, STD, STS	
			FB01-88-151	1	SPT. PKG., TURBO STM TYPE	
	88 152	ADJUSTER, NO. 3	FB01-88-152B	1		
	88 153	ADJUSTER, NO. 4	FB01-88-153B	1		
	88 160	CUSHION (L), FRONT SEAT	FB44-88-160	1	SPT. PKG TURBO STM TYPE	

5700A-7 FRONT SEATS (COUPE)

SEE ILLUSTRATION/S AT FRAME 2 - C 8

ITEM NO.	D-CODE	DESCRIPTION	PART NO.	QTY	MODEL/DESCRIPTION	REMARKS
	88 160 (CONT'D)	GRAY	07			
		RED	10			
		BLUE	48			
			FB02-88-160A	1	STD, SE, SPT STB, STS TYPE	
		DARK GRAY/GRAY	07			
		RED	10			
		BLUE	48			
			FB03-88-160A	1	GXL STC, STD TYPE	
		DARK GRAY/GRAY	07			
		RED	10			
		BLUE	48			
	88 161	TRIM (L), SEAT CUSHION	FB03-88-161	1	GXL STC, STD TYPE	
		DARK GRAY/GRAY	07			
		RED	10			
		BLUE	48			
			FB44-88-161	1	SPT. PKG., TURBO STM TYPE	
		GRAY	07			
		RED	10			
		BLUE	48			
			FB02-88-161	1	STD, SE, SPT STB, STS TYPE	
		DARK GRAY/GRAY	07			
		RED	10			
		BLUE	48			
	88 166	COVER (L), KNUCKLE	FB03-88-177A	1	GXL STC, STD TYPE	
		DARK GRAY	07			
		RED	10			
		BLUE	48			
			F044-88-177A	1	STD, SE, SPT, TURBO STB, STM, STS	
		DARK GRAY	07			
		RED	10			
		BLUE	48			
	88 180	BACK (L), FRONT SEAT	FB03-88-180	1	GXL STC, STD TYPE	
		DARK GRAY GRAY	07			
		RED	10			
		BLUE	48			

5700A-8 FRONT SEATS (COUPE)

SEE ILLUSTRATION/S AT FRAME 2 - C 8

ITEM NO.	D-CODE	DESCRIPTION	PART NO.	QTY	MODEL/DESCRIPTION	REMARKS
	88 180 (CONT'D)		FB44-88-180	1	SPT PKG., TURBO	
					STM TYPE	
		GRAY	07			
		RED	10			
		BLUE	48			
			FB02-88-180	1	STD, SPT, SE STB, STS TYPE	
		DARK GRAY/GRAY	07			
		RED	10			
		BLUE	48			
	88 181	TRIM (L), SEAT BACK	FB03-88-181	1	GXL STC, STD TYPE	
		DARK GRAY/GRAY	07			
		RED	10			
		BLUE	48			
			FB44-88-181	1	SPT., TURBO STM TYPE	
		GRAY	07			
		RED	10			
		BLUE	48			
			FB02-88-181	1	SE, STD, SPT. STB, STS TYPE	
		DARK GRAY/GRAY	07			
		RED	10			
		BLUE	48			
	88 257Q	PAD, SPACER	H001-88-257	1	GXL 2 2, SE 22, STD, 22 STD, STS	
	88 323A	V-NUT	1243-88-323	1	GXL 22, SE 22, STD 22 STD, STS	
	88 336	RING, STOPPER	FA58-88-336	1		
	88 342	DIAL, LUMBAR SUPPORT	FB03-88-385	1	GXL STC, STD TYPE	
		GRAY	07			
		RED	10			
		BLUE	48			
	88 704P	NUT	B092-88-519	2		
	88 734	BOLT	B092-88-818	2	GXL STC, STD TYPE	
				4	SE, SPT. STB, STS TYPE	
	88 743	COVER, DIAL	FB03-88-386	1	GXL STC, STD TYPE	

FRONT SEATS (COUPE)

ITEM NO.	D-CODE	DESCRIPTION	PART NO.	QTY	MODEL/DESCRIPTION	REMARKS
	88 743 (CONT'D)	GRAY	07			
		RED	10			
		BLUE	48			
	88 833	BOLT, ADJUSTER-FRT. SEAT	F044-88-833	4	SPT. PKG., TURBO STM TYPE	

SEE ILLUSTRATION/S AT FRAME 2 - C 8

SECTION INDEX -- BODY

STARTING LOCATION	SECT NO	SECTION NAME
2 - C 3	0900A	KEY SETS
2 - E 3	5000	FRONT BUMPER
2 - F 3	5005	RADIATOR GRILLE
2 - G 3	5010A	REAR BUMPER
2 - H 3	5030A	WINDOW MOULDINGS
2 - I 3	5040A	BODY MOULDINGS
2 - J 3	5060A	SIDE PROTECTORS
2 - K 3	5100	HEAD LAMPS
2 - L 3	5103	HEAD LAMP RETRACTORS
2 - M 3	5105	FRONT COMBINATION LAMPS
2 - C 4	5110A	REAR COMBINATION LAMPS
2 - E 4	5120	LICENSE LAMPS
2 - F 4	5125	INTERIOR LAMPS
2 - G 4	5130	OVERHEAD CONSOLE (COUPE)
2 - H 4	5170	ORNAMENTS
2 - I 4	5180	COWL & EXTRACTOR GRILLES
2 - K 4	5230	HOOD
2 - L 4	5260	TRUNK LID (CONVERTIBLE)
2 - M 4	5310	BODY PANELS (FRONT) (COUPE)
2 - N 4	5310A	BODY PANELS (FRONT) (CONVERTIBLE)
2 - C 5	5320	BODY PANELS (FENDER & WHEEL APRON) (COUPE)
2 - D 5	5320B	BODY PANELS (FENDER & WHEEL APRON) (CONVERTIBLE)
2 - E 5	5330	BODY PANELS (DASH & COWL PANEL)
2 - F 5	5340A	BODY PANELS (SIDE) (COUPE)
2 - H 5	5340AA	BODY PANELS (SIDE) (CONVERTIBLE)
2 - K 5	5360A	BODY PANELS (ROOF) (COUPE)
2 - L 5	5370	BODY PANELS (FLOOR) (COUPE)
2 - M 5	5370A	BODY PANELS (FLOOR) (CONVERTIBLE)
2 - C 6	5390	FLOOR ATTACHMENTS (COUPE)
2 - E 6	5390A	FLOOR ATTACHMENTS (CONVERTIBLE)
2 - G 6	5500	DASHBOARD EQUIPMENTS (COUPE) (W O ANTI-LOCK BRAKE SYSTEM)
2 - I 6	5500A	DASHBOARD EQUIPMENTS (COUPE) (ANTI-LOCK BRAKE SYSTEM)
2 - J 6	5500B	DASHBOARD EQUIPMENTS (CONVERTIBLE)
2 - K 6	5520	METER HOOD
2 - L 6	5530	SPEEDOMETER CABLE
2 - M 6	5540	METER COMPONENTS (COUPE) (W O ANTI-LOCK BRAKE SYSTEM)
2 - C 7	5540A	METER COMPONENTS (COUPE) (ANTI-LOCK BRAKE SYSTEM)
2 - E 7	5540B	METER COMPONENTS (CONVERTIBLE)
2 - F 7	5560	DASHBOARD & RELATED PARTS
2 - I 7	5570	CONSOLE
2 - K 7	5580	VENTILATOR
2 - C 8	5700A	FRONT SEATS (COUPE)
2 - C 9	5700AA	FRONT SEATS (COUPE) (LEATHER)
2 - C10	5700AB	FRONT SEATS (CONVERTIBLE) (CLOTH)
2 - F10	5700AC	FRONT SEATS (CONVERTIBLE) (LEATHER)
2 - J10	5750A	REAR SEATS (CLOTH)
2 - C11	5750AA	REAR SEATS (LEATHER)
2 - H11	5790A	SEAT BELTS
2 - J11	5800A	FRONT DOORS (COUPE)
2 - K11	5800AA	FRONT DOORS (CONVERTIBLE)
2 - C12	5830A	FRONT DOOR MECHANISMS (COUPE)
2 - H12	5830AA	FRONT DOOR MECHANISMS (CONVERTIBLE)
2 - C13	5840A	FRONT DOOR TRIMS & RELATED PARTS (COUPE)
2 - K13	5840AB	FRONT DOOR TRIMS & RELATED PARTS (CONVERTIBLE)
2 - N13	6100	HEATER
2 - C14	6110	HEATER UNIT COMPONENTS
2 - D14	6115	HEATER CONTROLS COMPONENTS
2 - E14	6120	HEATER BLOWER COMPONENTS
2 - F14	6130	AIR CONDITIONER (W O AIR CONDITIONER)
2 - G14	6132A	CONDENSER PACKAGE
2 - I14	6142A	COMPRESSOR MOUNTING KIT COMPRESSOR CLUTCH ASSEMBLY & REPAIR PARTS
2 - J14	6152A	EVAPORATOR PACKAGE
2 - K14	6200	LIFT GATE
2 - L14	6230	LIFT GATE MECHANISMS (COUPE)
2 - N14	6300A	WINDOW GLASSES
2 - C15	6330	SUNROOF (COUPE)
2 - E15	6330A	SOFT TOP (CONVERTIBLE)
2 - G15	6600B	SWITCHES & RELAYS (ENGINE) (W O TURBO)
2 - J15	6600BA	SWITCHES & RELAYS (ENGINE) (TURBO)
2 - M15	6610	DASHBOARD SWITCHES (MANUAL OPERATING)
2 - N15	6611	COMBINATION SWITCH
2 - C16	6612	CLUSTER SWITCH
2 - D16	6615	POWER WINDOW SWITCHES
2 - E16	6620	DOOR SWITCH
2 - F16	6630	RELAYS & CPU (BODY)
2 - G16	6635	HORNS
2 - H16	6640	AUTO CRUISE CONTROL SYSTEM
2 - I16	6680	AUDIO SYSTEMS (RADIO & TAPE DECK)

(THIS ILLUSTRATION CONSISTS OF 9 PAGES)

SEAT TYPE		STE	STF	STZ
SPECIFICATIONS / GRADE		GXL-2-SEAT	GXL-4-SEAT	'88-TURBO, 10TH-ANNIV.
SEAT TRIM		LEATHER 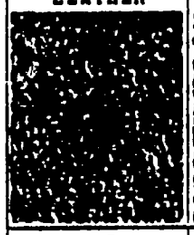	LEATHER 	LEATHER 
① SEAT BACK	HIGH	–	–	×
	LOW	×	×	–
② SWING PILLOW		×	×	–
DRIVER'S SEAT	③LUMBAR SUPPORT	×	×	–
	④LIFTER	×	×	–
⑤ REAR SEAT		–	×	–

② SWING PILLOW

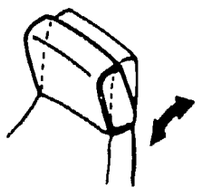

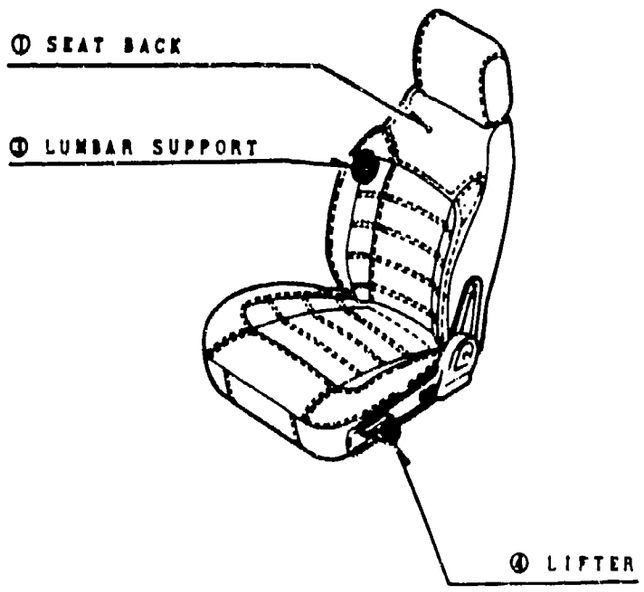

(THIS ILLUSTRATION CONSISTS OF 9 PAGES)

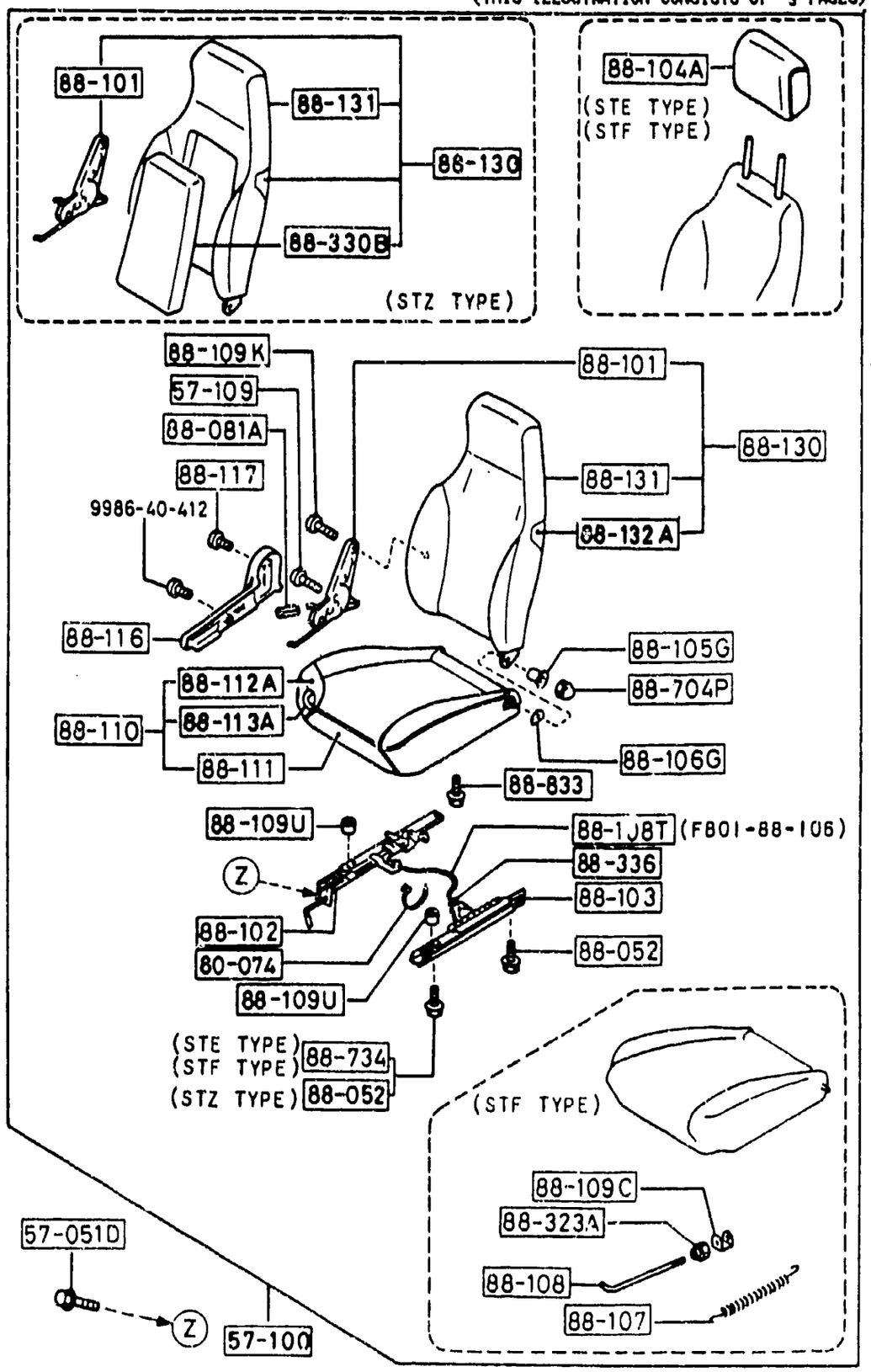

(THIS ILLUSTRATION CONSISTS OF 9 PAGES)

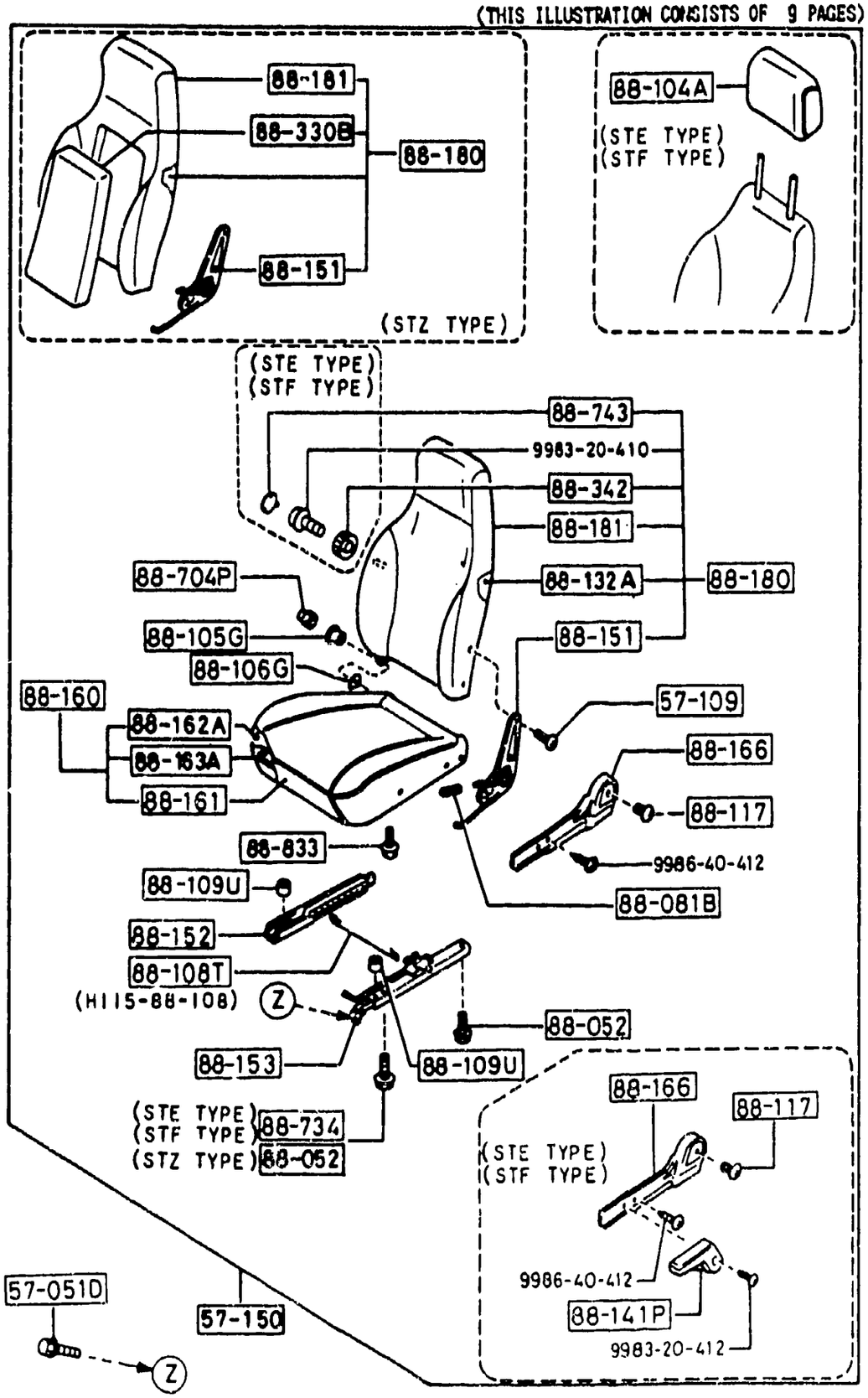

(STE TYPE)(STF TYPE)
(TRIM-SET RH)

(THIS ILLUSTRATION CONSISTS OF 9 PAGES)

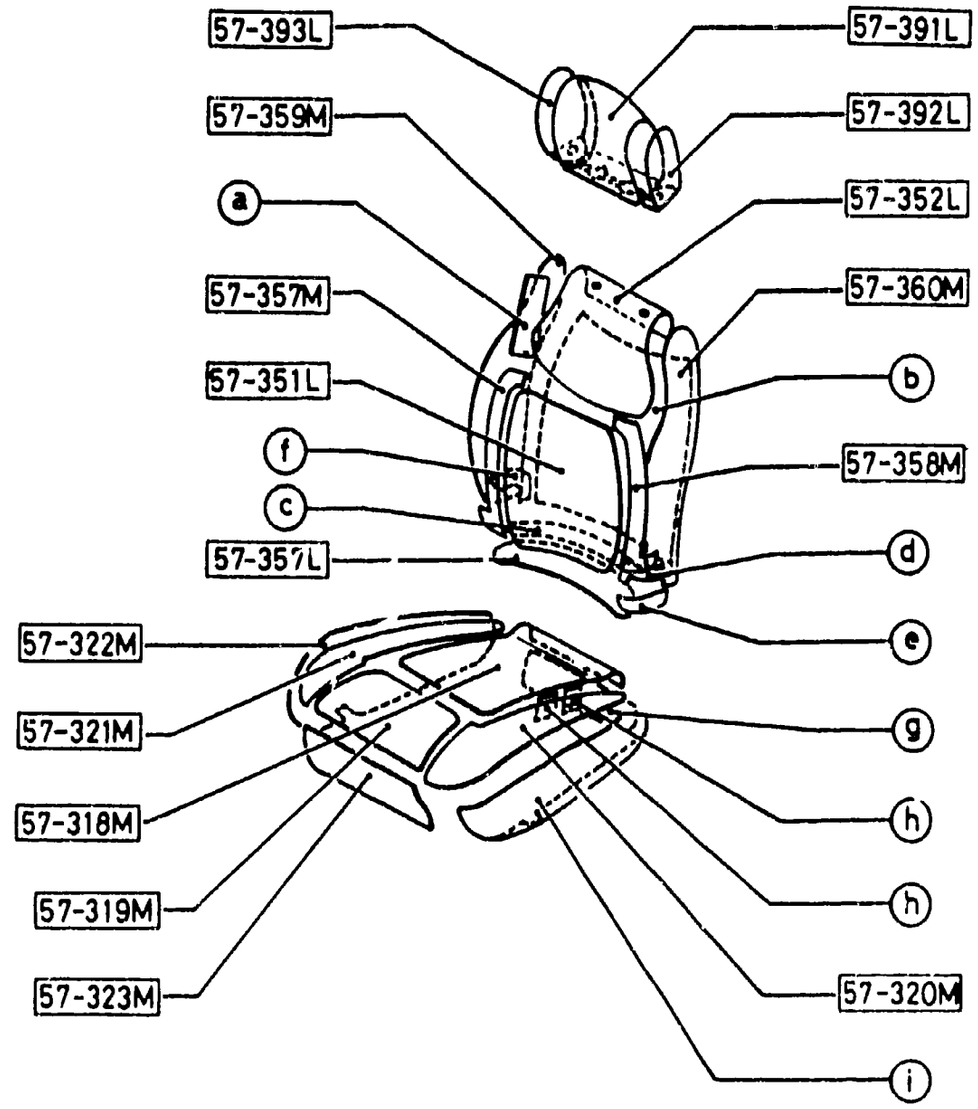

(STE TYPE) (STF TYPE)
(TRIM-SET RH)

(THIS ILLUSTRATION CONSISTS OF 9 PAGES)

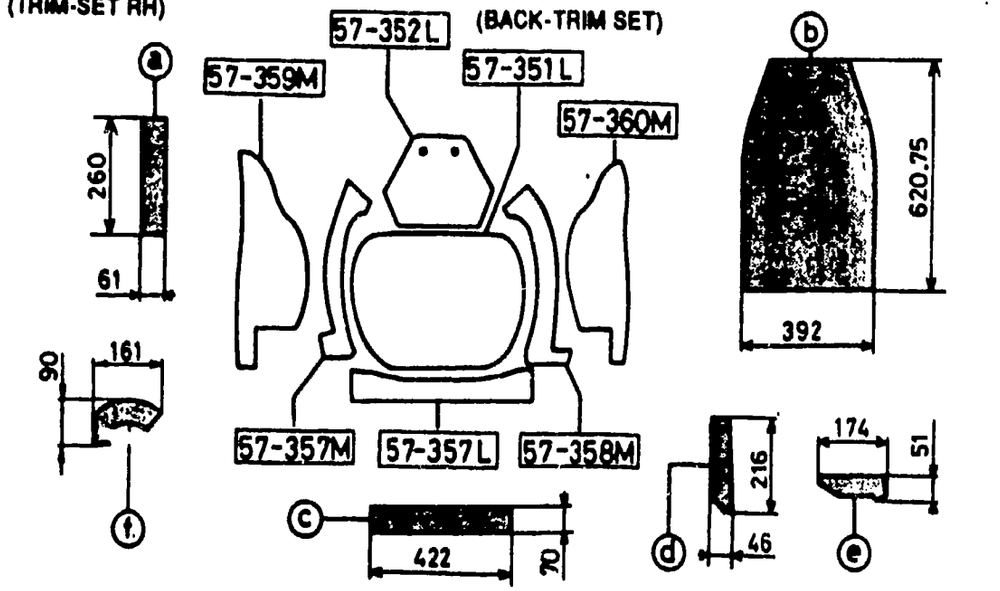

TRIM (R), HEAD REST

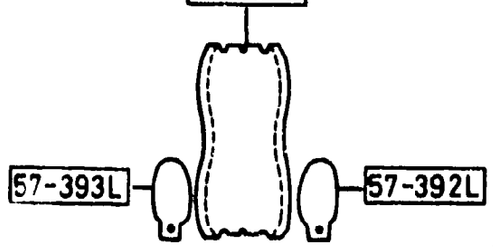

(NOTES)

A. PARTS INDICATED AS ■ ARE MADE OF VINYL.
B. LEATHER PATCHES ARE AVAILABLE FROM YOUR MAZDA DISTRIBUTORS UNDER DIFFERENT PART NUMBER THAN INDICATED. PLEASE REFER TO PARTS BULLETIN FOR DETAILS.

TRIM (R), CUSHION

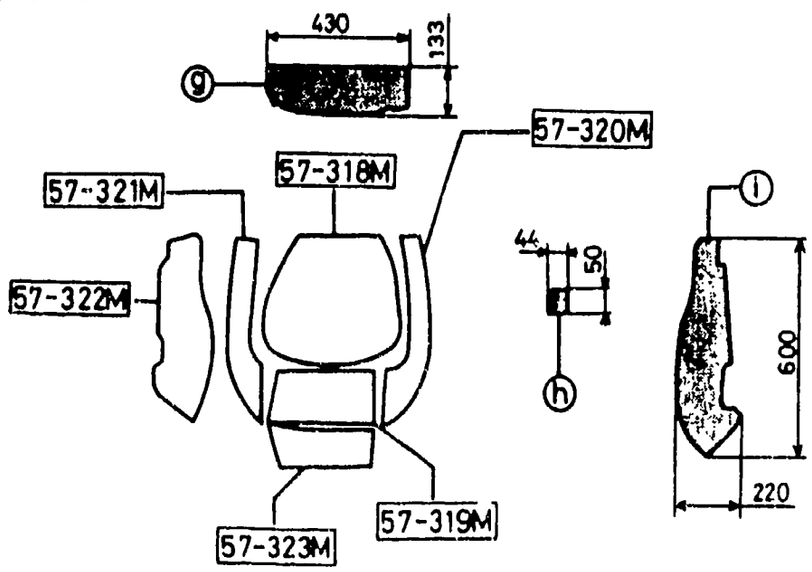

(STE TYPE) (STF TYPE)
(TRIM-SET LH)

(THIS ILLUSTRATION CONSISTS OF 9 PAGES)

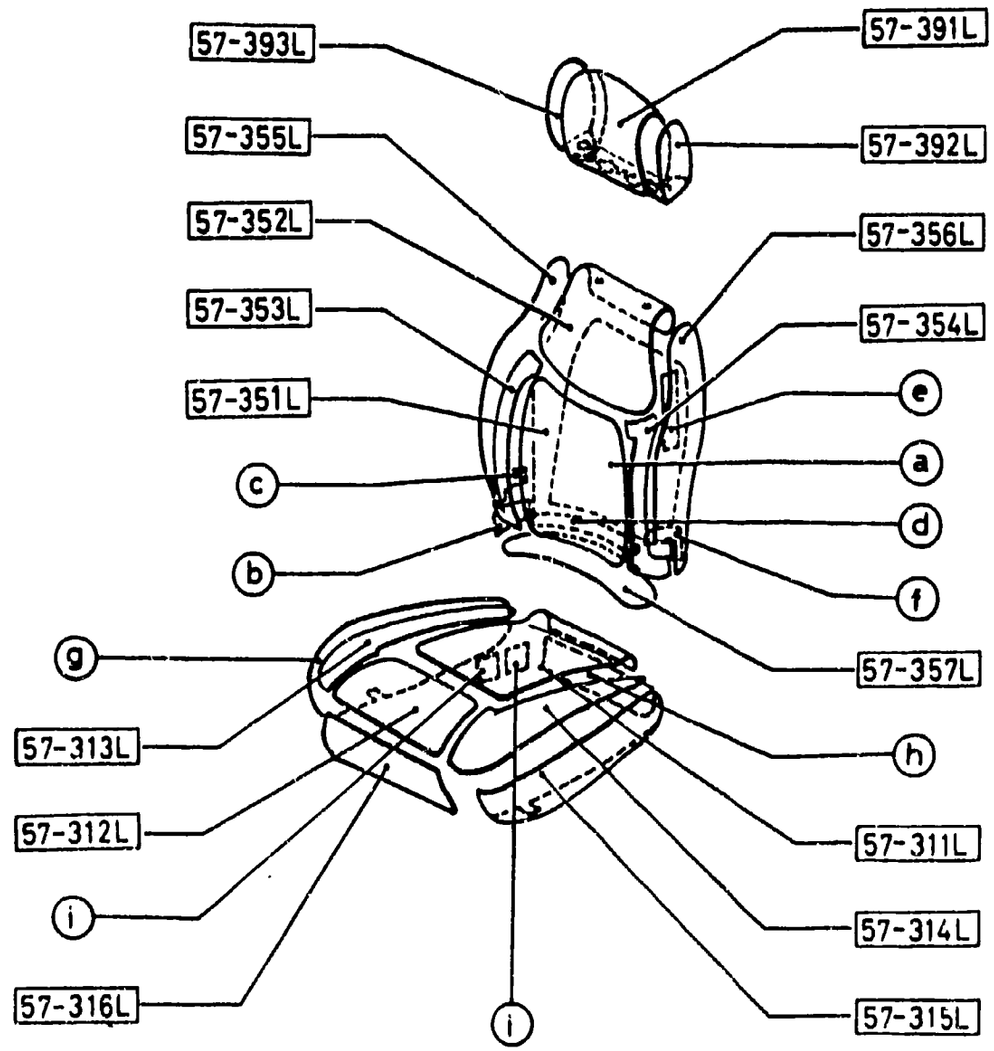

FRONT SEATS (COUPE) (LEATHER)

(STE TYPE) (STF TYPE)
(TRIM-SET LH)

(THIS ILLUSTRATION CONSISTS OF 9 PAGES)

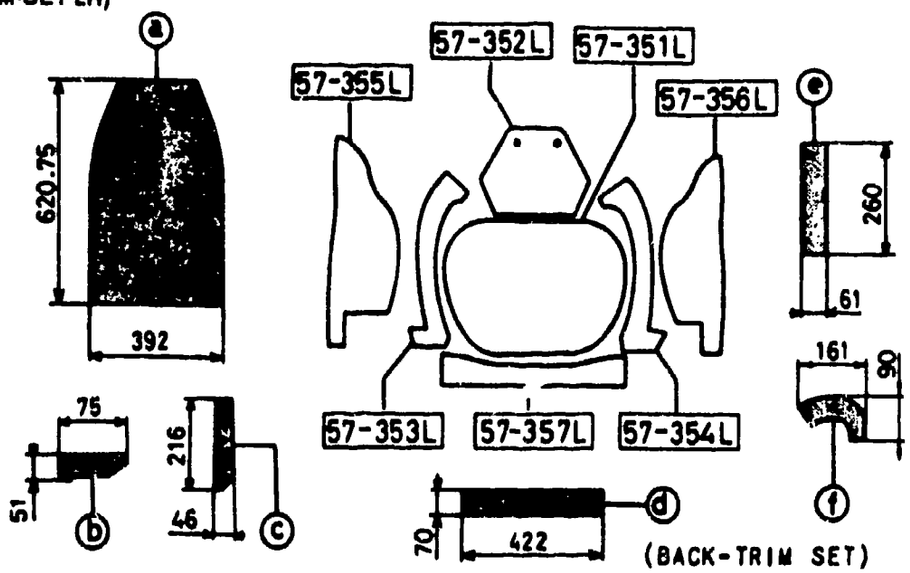

TRIM(L),HEAD REST

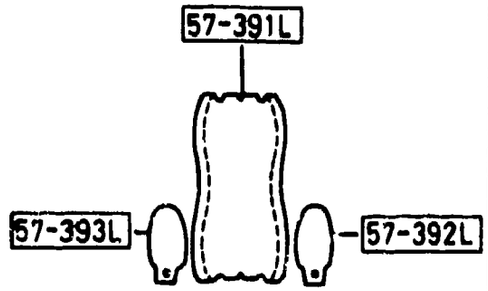

(NOTES)

A. PARTS INDICATED AS [redacted] ARE MADE OF VINYL.
B. LEATHER PATCHES ARE AVAILABLE FROM YOUR MAZDA DISTRIBUTORS UNDER DIFFERENT PART NUMBER THAN INDICATED. PLEASE REFER TO PARTS BULLETIN FOR DETAILS.

TRIM(L),CUSHION

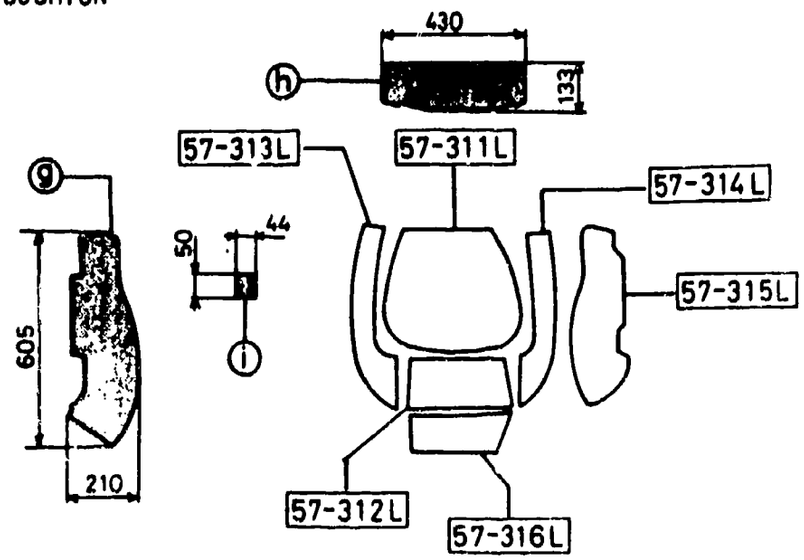

(STZ TYPE)
(BACK-TRIMSET)

(THIS ILLUSTRATION CONSISTS OF 9 PAGES)

(TRIM-SET RH)

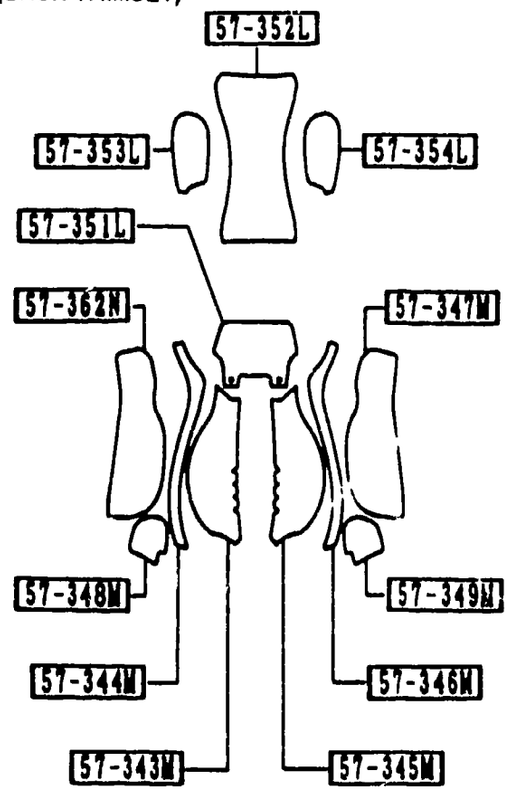

(BACK CENTER- TRIMSET)

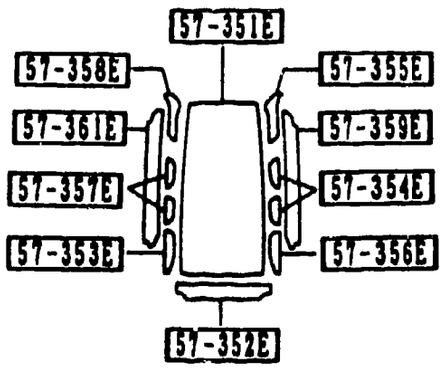

(CUSHION-TRIMSET)

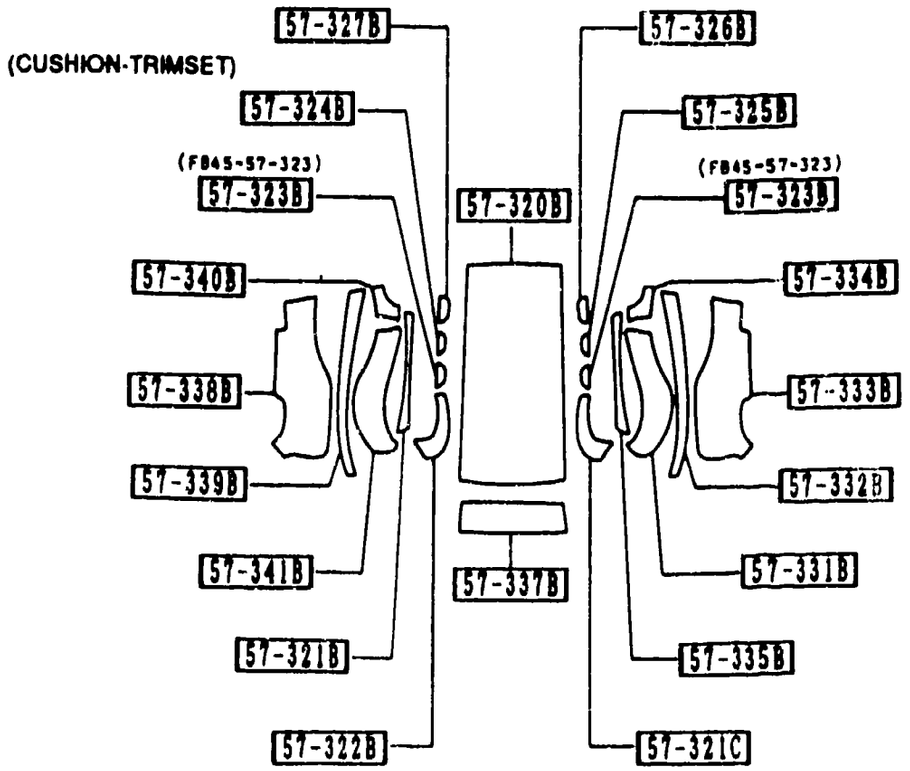

(THIS ILLUSTRATION CONSISTS OF 9 PAGES)

(STZ TYPE)
(BACK-TRIMSET)

(TRIM-SET LH)

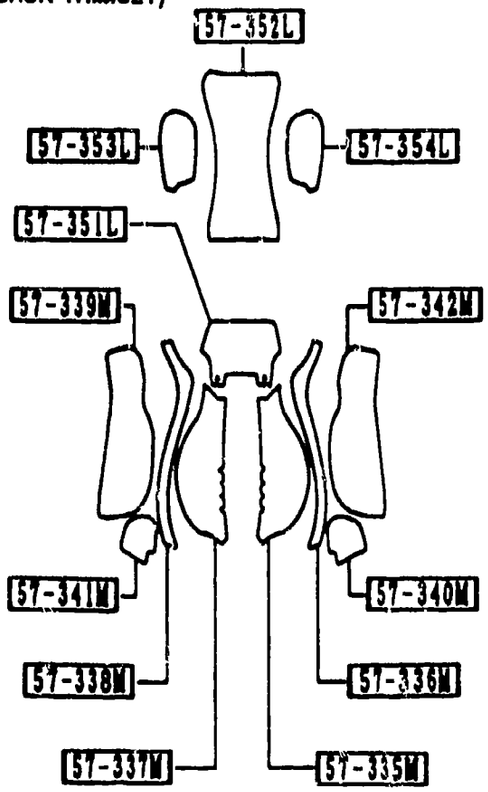

(BACK CENTER -TRIMSET)

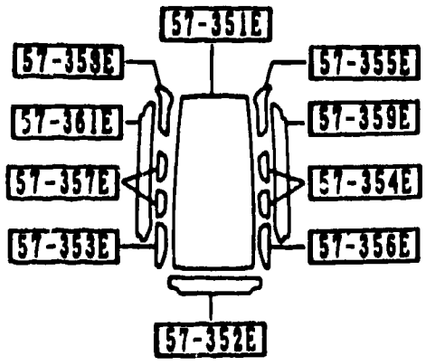

(CUSHION-TRIMSET)

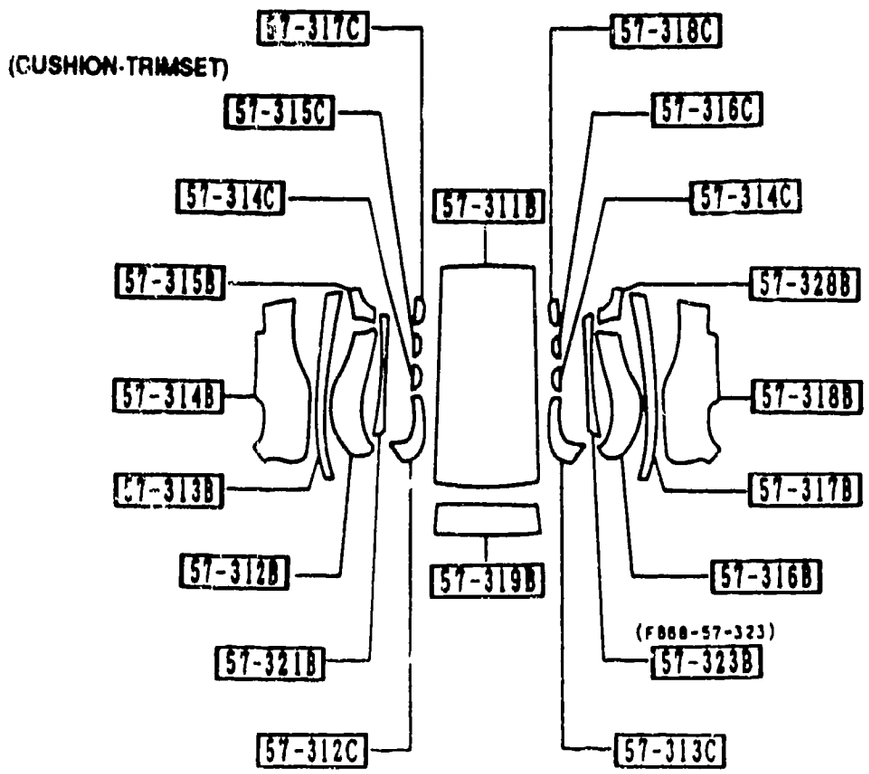

5700AA-0 FRONT SEATS (COUPE) (LEATHER)

SEE ILLUSTRATION/S AT FRAME 2 - C 9

ITEM NO.	D-CODE	DESCRIPTION	PART NO.	QTY	MODEL/DESCRIPTION	REMARKS
	57 010	BOLT, SET	UB40-57-05X	8		
	57 100	SEAT (R), FRONT	FB60-57-100	1	GXL, 2-SEAT STE TYPE	
		DARK GRAY	07			
		RED	10			
		BLUE	48			
			FB61-57-100	1	GXL, 22&STF TYPE	
		DARK GRAY	07			
		RED	10			
		BLUE	48			
			FB46-57-100	1	'88 TURBO STZ TYPE	
		DARK GRAY	09			
		RED	13			
		BLUE	49			
	57 109	SCREW, KNUCKLE	0259-57-109	4		
	57 150	SEAT (L), FRONT	FB60-57-150	1	GXL STE, STF TYPE	
		DARK GRAY	07			
		RED	10			
		BLUE	48			
	57 311L	TRIM NO. 1, CUSHION	FB10-57-311	1	GXL STE, STF TYPE	
		DARK GRAY	07			
		RED	10			
		BLUE	48			
	57 312L	TRIM NO. 2, CUSHION	FB10-57-312	1	GXL STE, STF TYPE	
		DARK GRAY	07			
		RED	10			
		BLUE	48			
	57 313L	TRIM NO. 3, CUSHION	FB10-57-313	1	GXL STE, STF TYPE	
		DARK GRAY	07			
		RED	10			
		BLUE	48			
	57 314L	TRIM NO 4, CUSHION	FB10-57-314	1	GXL STE, STF TYPE	
		DARK GRAY	07			
		RED	10			
		BLUE	48			
	57 315L	TRIM NO. 5, CUSHION	FB10-57-315	1	GXL STE, STF TYPE	
		DARK GRAY	07			
		RED	10			
		BLUE	48			

5700AA-7 FRONT SEATS (COUPE) (LEATHER)

SEE ILLUSTRATION/S AT FRAME 2 - C 9

ITEM NO.	D-CODE	DESCRIPTION	PART NO.	QTY	MODEL/DESCRIPTION	REMARKS
	57 316L	TRIM NO. 6, CUSHION	FB10-57-316	1	GXL STE, STF TYPE	
		DARK GRAY	07			
		RED	10			
		BLUE	48			
	57 318M	TRIM NO. 1 (R), CUSHION-FRT.	FB10-57-318	1	GXL STE, STF TYPE	
		DARK GRAY	07			
		RED	10			
		BLUE	48			
	57 319M	TRIM NO. 2 (R), CUSHION-FRT.	FB10-57-319	1	GXL STE, STF TYPE	
		DARK GRAY	07			
		RED	10			
		BLUE	48			
	57 320M	TRIM NO. 3 (R), CUSHION-FRT.	FB10-57-320	1	GXL STE, STF TYPE	
		DARK GRAY	07			
		RED	10			
		BLUE	48			
	57 321M	TRIM NO. 4 (R), CUSHION-FRT.	FB10-57-321	1	GXL STE, STF TYPE	
		DARK GRAY	07			
		RED	10			
		BLUE	48			
	57 322M	TRIM NO. 5 (R), CUSHION-FRT.	FB10-57-322	1	GXL STE, STF TYPE	
		DARK GRAY	07			
		RED	10			
		BLUE	48			
	57 323M	TRIM NO. 6 (R), CUSHION-FRT.	FB10-57-323	1	GXL STE, STF TYPE	
		DARK GRAY	07			
		RED	10			
		BLUE	48			
	57 351L	TRIM NO. 1, BACK	FB10-57-351	2	GXL STE, STF TYPE	
		DARK GRAY	07			
		RED	10			
		BLUE	48			
	57 352L	TRIM NO 2, BACK	FB10-57-352	2	GXL STE, STF TYPE	
		DARK GRAY	07			
		RED	10			
		BLUE	48			
	57 353L	TRIM NO. 3, BACK	FB10-57-353	1	GXL STE, STF TYPE	

5700AA-8 FRONT SEATS (COUPE) (LEATHER)

SEE ILLUSTRATION/S AT FRAME 2 - C 9

ITEM NO.	D-CODE	DESCRIPTION	PART NO.	QTY	MODEL/DESCRIPTION	REMARKS
	57 353L (CONT'D)	DARK GRAY	07			
		RED	10			
		BLUE	48			
	57 354L	TRIM NO. 4, BACK	FB10-57-354	1	GXL STE, STF TYPE	
		DARK GRAY	07			
		RED	10			
		BLUE	48			
	57 355L	TRIM NO. 5, BACK	FB10-57-355	1	GXL STE, STF TYPE	
		DARK GRAY	07			
		RED	10			
		BLUE	48			
	57 356L	TRIM NO. 6, BACK	FB10-57-356	1	GXL STE, STF TYPE	
		DARK GRAY	07			
		RED	10			
		BLUE	48			
	57 357L	TRIM NO. 7, BACK	FB10-57-361	2	GXL STE, STF TYPE	
		DARK GRAY	07			
		RED	10			
		BLUE	48			
	57 357M	TRIM NO. 3 (R), BACK-FRT.	FB10-57-357	1	GXL STE, STF TYPE	
		DARK GRAY	07			
		RED	10			
		BLUE	48			
	57 358M	TRIM NO. 4 (R), BACK-FRT	FB10-57-358	1	GXL STE, STF TYPE	
		DARK GRAY	07			
		RED	10			
		BLUE	48			
	57 359M	TRIM NO. 5 (R), BACK-FRT.	FB10-57-359	1	GXL STE, STF TYPE	
		DARK GRAY	07			
		RED	10			
		BLUE	48			
	57 360M	TRIM NO. 6 (R), BACK-FRT.	FB10-57-360	1	GXL STE, STF TYPE	
		DARK GRAY	07			
		RED	10			
		BLUE	48			
	57 391L	TRIM NO. 1, HEAD REST	FB10-57-391	2	GXL STE, STF TYPE	
		DARK GRAY	07			

5700AA-9 FRONT SEATS (COUPE) (LEATHER)

SEE ILLUSTRATION/S AT FRAME 2 - C 9

ITEM NO.	D-CODE	DESCRIPTION	PART NO	QTY	MODEL/DESCRIPTION	REMARKS
	57 391L (CONT'D)	RED	10			
		BLUE	48			
	57 392L	TRIM NO. 2, HEAD REST	FB10-57-392	2	GXL STE, STF TYPE	
		DARK GRAY	07			
		RED	10			
		BLUE	48			
	57 393L	TRIM NO. 3, HEAD REST	FB10-57-393	2	GXL STE, STF TYPE	
		DARK GRAY	07			
		RED	10			
		BLUE	48			
	88 052	BOLT	B093-88-818	2	GXL STE, STF TYPE	
				4	'89 TURBO STZ TYPE	7701-
	88 081A	KNOB (R), KNUCKLE	B001-88-081	1		
		DARK GRAY	09			
		RED	10			
		BLUE	48			
	88 081B	KNOB (L), KNUCKLE	B001-88-091	1		
		DARK GRAY	09			
		RED	10			
		BLUE	48			
	88 101	KNUCKLE (R), RECLINING	BF80-88-101	1	GXL 2-SEAT STE TYPE	
			BF82-88-101	1	GXL 2.2 STF TYPE	
			FB01-88-101	1	'88 TURBO STZ TYPE	7701-
	88 102	ADJUSTER, NO. 1	FB01-88-1028	1	GXL 2-SEAT STE TYPE	
			FB04-88-1028	1	GXL 22 STF TYPE	
	88 103	ADJUSTER, NO. 2	FB01-88-1038	1		
	88 104A	RESTRAINT, HEAD	FB10-88-140	2	GXL STE, STF TYPE	
		DARK GRAY	07			
		RED	10			
		BLUE	48			
	88 105G	BUSHING, HINGE	FB01-88-107	2		
	88 106G	WASHER, HINGE	FB01-88-105	2		
	88 107	SPRING, RETURN	F032-88-107	1	GXL 22 STF TYPE	
	88 108	ROD	FB04-88-109	1	GXL 22 STF TYPE	
			FB44-88-109	2	'88 TURBO STZ TYPE	

7701 FC33* -550169

5700AA-10 FRONT SEATS (COUPE) (LEATHER)

SEE ILLUSTRATION/S AT FRAME 2 - C 9

ITEM NO.	D-CODE	DESCRIPTION	PART NO	QTY	MODEL/DESCRIPTION	REMARKS
	88 108T	WIRE, RELEASE	FB01-88-106	1	GXL 22, '88 TURBO STF, STZ TYPE	
	88 109C	STOPPER	8643-88-109	1	GXL 22 STF TYPE	
	88 109K	SCREW, KNUCKLE	B095-88-109	4		
	88 110	CUSHION (R), FRONT SEAT	FB41-88-110A	1	GXL STE, STF TYPE	
		DARK GRAY	07			
		RED	10			
		BLUE	48			
			FB46-88-111	1	'88 TURBO STZ TYPE	
		DARK GRAY	09			
		RED	13			
		BLUE	49			
	88 111	TRIM (R), SEAT CUSHION	FB10-88-111	1	GXL STE, STF TYPE	
		DARK GRAY	07			
		RED	10			
		BLUE	48			
			FB45-88-111	1	'88 TURBO STZ TYPE	
		DARK GRAY	09			
		RED	13			
		BLUE	49			
	88 116	COVER (R), KNUCKLE	F044-88-127A	1		
		DARK GRAY	07			
		RED	10			
		BLUE	48			
	88 117	SCREW, KNUCKLE	1243-88-117	2		
	88 130	BACK (R), FRONT SEAT	FB10-88-130	1	GXL 2-SEAT STE TYPE	
		DARK GRAY	07			
		RED	10			
		BLUE	48			
			FB11-88-130	1	GXL 22 STF TYPE	
		DARK GRAY	07			
		RED	10			
		BLUE	49			
			FB45-88-130	1	'88 TURBO STZ TYPE	
		DARK GRAY	09			
		RED	13			
		BLUE	49			
	88 131	TRIM (R), SEAT BACK	FB10-88-131	1	GXL STE, STF TYPE	

5700AA-11 FRONT SEATS (COUPE) (LEATHER)

SEE ILLUSTRATION/S AT FRAME 2 - C 9

ITEM NO	D-CODE	DESCRIPTION	PART NO	QTY	MODEL DESCRIPTION	REMARKS
	88 151 (CONT'D)	DARK GRAY	07			
		RED	10			
		BLUE	48			
			F845-88-131	1	'88 TURBO ST2 TYPE	
		DARK GRAY	09			
		RED	13			
		BLUE	49			
	88 141P	LEVER, LIFTER	FA58-88-131	1	GXI STE, STF TYPE	
		DARK GRAY	07			
		RED	10			
		BLUE	48			
	88 151	KNUCKLE RL RECLINING	F830-88-151	1	GXI STE, STF TYPE	
			F801-88-131	1	'88 TURBO ST2 TYPE	
	88 152	ADJUSTER, NO 3	F801-88-1528	1		
	88 153	ADJUSTER, NO 4	F801-88-1538	1		
	88 160	CUSHION RL FRONT SEAT	F841-88-140A	1	GXI STE, STF TYPE	
		DARK GRAY	07			
		RED	10			
		BLUE	48			
			F845-88-140	1	'88 TURBO ST2 TYPE	
		DARK GRAY	09			
		RED	13			
		BLUE	49			
	88 161	TRIM RL SEAT CUSHION	F810-88-161	1	GXI STE, STF TYPE	
		DARK GRAY	07			
		RED	10			
		BLUE	48			
			F845-88-161	1	'88 TURBO ST2 TYPE	
		DARK GRAY	09			
		RED	13			
		BLUE	49			
	88 166	COVER RL KNUCKLE	F803-88-177A	1	GXI STE, STF TYPE	
		DARK GRAY	07			
		RED	10			
		BLUE	48			
			F044-88-177A	1	'88 TURBO ST2 TYPE	

ITEM NO	D-CODE	DESCRIPTION	PART NO	QTY	MODEL/DESCRIPTION	REMARKS
	88 166 (CONT'D)	DARK GRAY	07			
		RED	10			
		BLUE	48			
	88 180	BACK AL FRONT SEAT	FB10-88-180	1	GXL STE, STF TYPE	
		DARK GRAY	07			
		RED	10			
		BLUE	48			
			FB45-88-180	1	'88 TURBO ST2 TYPE	
		DARK GRAY	09			
		RED	13			
		BLUE	49			
	88 181	TRIM AL SEAT BACK	FB10-88-181	1	GXL STE, STF TYPE	
		DARK GRAY	07			
		RED	10			
		BLUE	48			
			FB45-88-181	1	'88 TURBO ST2 TYPE	
		DARK GRAY	09			
		RED	13			
		BLUE	49			
	88 323A	U-NUT	1243-88-323	1	GXL 2 2 STF TYPE	
	88 336	RING STOPPER	FA58-88-336	1	GXL 22, '88 TURBO STF, ST2 TYPE	
	88 342	DIAL LUMBAR SUPPORT	FB03-88-385	1	GXL STE STF TYPE	
		GRAY	07			
		RED	10			
		BLUE	48			
	88 704P	NUT	B092-88-519	2		
	88 734	BOLT	B092-88-818	2	GXL STE STF TYPE	
	88 743	COVER DIAL	FB03-88-386	1	GXL STE STF TYPE	
		GRAY	07			
		RED	10			
		BLUE	48			
	88 833	BOLT ADJUSTER-FRT SEAT	F044-88-833	4	'88 TURBO ST2 TYPE	

SEE ILLUSTRATION/S AT FRAME 2 - C 9

SECTION INDEX -- BODY

STARTING LOCATION	SECT NO	SECTION NAME
2 - C 3	0900	KEY SETS
2 - E 3	5000	FRONT BUMPER
2 - F 3	5005	RADIATOR GRILLE
2 - G 3	5010A	REAR BUMPER
2 - H 3	5020A	WINDOW MOULDINGS
2 - I 3	5040A	BODY MOULDINGS
2 - J 3	5060A	SIDE PROTECTORS
2 - K 3	5100	HEAD LAMPS
2 - L 3	5103	HEAD LAMP RETRACTORS
2 - M 3	5105	FRONT COMBINATION LAMPS
2 - C 4	5110A	REAR COMBINATION LAMPS
2 - E 4	5120	LICENSE LAMPS
2 - F 4	5125	INTERIOR LAMPS
2 - G 4	5130	OVERHEAD CONSOLE (COUPE)
2 - H 4	5170	ORNAMENTS
2 - I 4	5180	COWL & EXTRACTOR GILLES
2 - K 4	5230	HOOD
2 - L 4	5260	TRUNK LID (CONVERTIBLE)
2 - M 4	5310	BODY PANELS (FRONT) (COUPE)
2 - H 4	5310A	BODY PANELS (FRONT) (CONVERTIBLE)
2 - C 5	5320	BODY PANELS (FENDER & WHEEL APRON) (COUPE)
2 - D 5	5320B	BODY PANELS (FENDER & WHEEL APRON) (CONVERTIBLE)
2 - E 5	5330	BODY PANELS (DASH & COWL PANEL)
2 - F 5	5340A	BODY PANELS (SIDE) (COUPE)
2 - H 5	5340AA	BODY PANELS (SIDE) (CONVERTIBLE)
2 - K 5	5360A	BODY PANELS (ROOF) (COUPE)
2 - L 5	5370	BODY PANELS (FLOOR) (COUPE)
2 - M 5	5370A	BODY PANELS (FLOOR) (CONVERTIBLE)
2 - C 6	5390	FLOOR ATTACHMENTS (COUPE)
2 - E 6	5390A	FLOOR ATTACHMENTS (CONVERTIBLE)
2 - G 6	5500	DASHBOARD EQUIPMENTS (COUPE) (W O ANTI-LOCK BRAKE SYSTEM)
2 - I 6	5500A	DASHBOARD EQUIPMENTS (COUPE) (ANTI-LOCK BRAKE SYSTEM)
2 - J 6	5500B	DASHBOARD EQUIPMENTS (CONVERTIBLE)
2 - K 6	5520	METER HOOD
2 - L 6	5530	SPEEDOMETER CABLE
2 - M 6	5540	METER COMPONENTS (COUPE) (W O ANTI-LOCK BRAKE SYSTEM)
2 - C 7	5540A	METER COMPONENTS (COUPE) (ANTI-LOCK BRAKE SYSTEM)
2 - E 7	5540B	METER COMPONENTS (CONVERTIBLE)
2 - F 7	5560	DASHBOARD & RELATED PARTS
2 - I 7	5570	CONSOLE
2 - K 7	5580	VENTILATOR
2 - C 8	5700A	FRONT SEATS (COUPE)
2 - C 9	5700AA	FRONT SEATS (COUPE) (LEATHER)
2 - C10	5700AB	FRONT SEATS (CONVERTIBLE) (CLOTH)
2 - F10	5700AC	FRONT SEATS (CONVERTIBLE) (LEATHER)
2 - J10	5750A	REAR SEATS (CLOTH)
2 - C11	5750AA	REAR SEATS (LEATHER)
2 - H11	5790A	SEAT BELTS
2 - J11	5800A	FRONT DOORS (COUPE)
2 - K11	5800AA	FRONT DOORS (CONVERTIBLE)
2 - C12	5830A	FRONT DOOR MECHANISMS (COUPE)
2 - H12	5830AA	FRONT DOOR MECHANISMS (CONVERTIBLE)
2 - C13	5840A	FRONT DOOR TRIMS & RELATED PARTS (COUPE)
2 - K13	5840AB	FRONT DOOR TRIMS & RELATED PARTS (CONVERTIBLE)
2 - N13	6100	HEATER
2 - C14	6110	HEATER UNIT COMPONENTS
2 - D14	6115	HEATER CONTROLS COMPONENTS
2 - E14	6120	HEATER BLOWER COMPONENTS
2 - F14	6130	AIR CONDITIONER (W O AIR CONDITIONER)
2 - G14	6132A	CONDENSER PACKAGE
2 - I14	6142A	COMPRESSOR MOUNTING KIT COMPRESSOR CLUTCH ASSEMBLY & REPAIR PARTS
2 - J14	6152A	EVAPORATOR PACKAGE
2 - K14	6200	LIFT GATE
2 - L14	6230	LIFT GATE MECHANISMS (COUPE)
2 - N14	6300A	WINDOW GLASSES
2 - C15	6330	SUNROOF (COUPE)
2 - E15	6330A	SOFT TOP (CONVERTIBLE)
2 - G15	6600B	SWITCHES & RELAYS (ENGINE) (W O TURBO)
2 - J15	6600BA	SWITCHES & RELAYS (ENGINE) (TURBO)
2 - M15	6610	DASHBOARD SWITCHES (MANUAL OPERATING)
2 - N15	6611	COMBINATION SWITCH
2 - C16	6612	CLUSTER SWITCH
2 - D16	6615	POWER WINDOW SWITCHES
2 - E16	6620	DOOR SWITCH
2 - F16	6630	RELAYS & CPU (BODY)
2 - G16	6635	HORNS
2 - H16	6640	AUTO CRUISE CONTROL SYSTEM
2 - I16	6680	AUDIO SYSTEMS (RADIO & TAPE DECK)

(THIS ILLUSTRATION CONSISTS OF 2 PAGES)

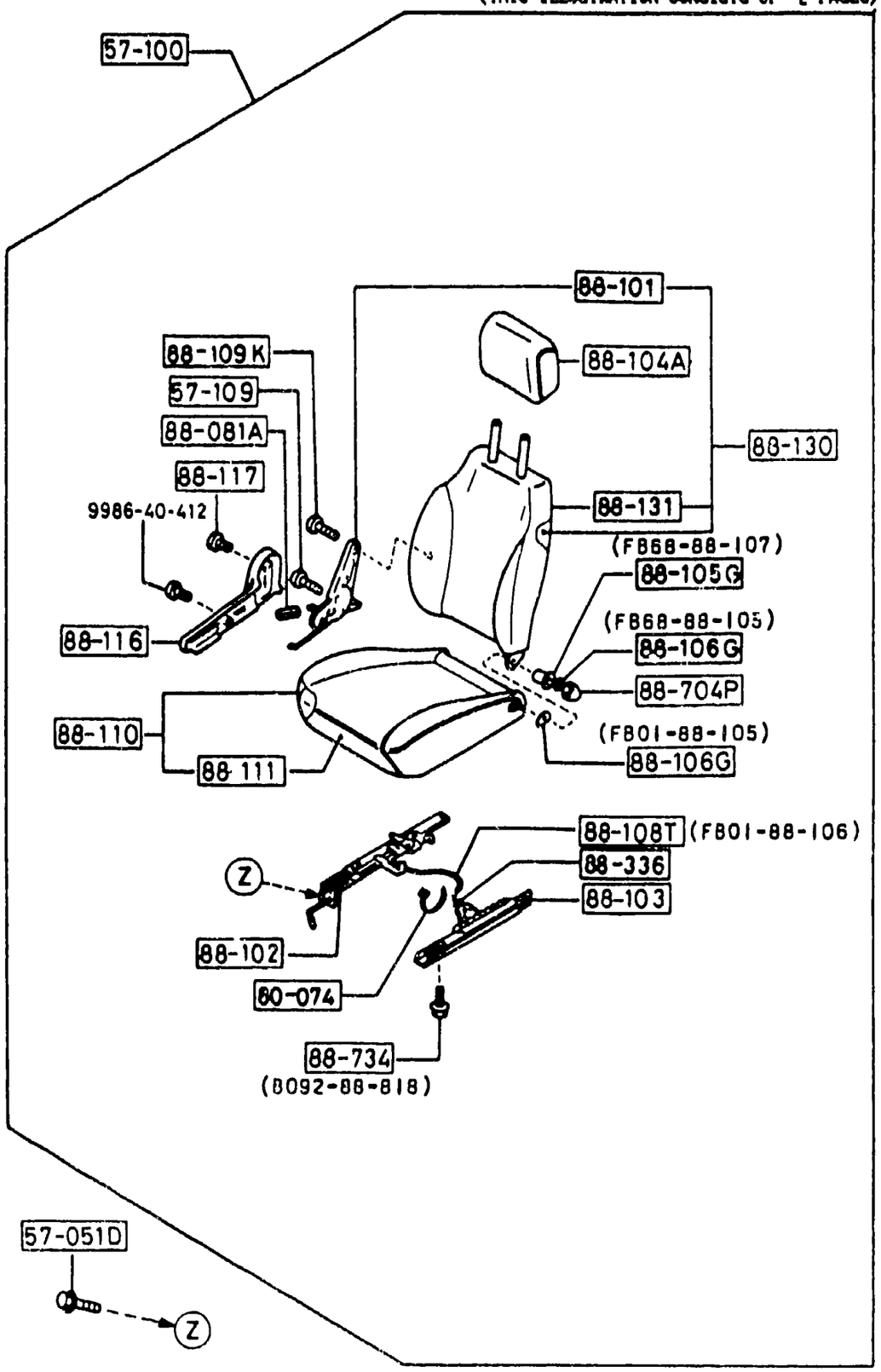

(THIS ILLUSTRATION CONSISTS OF 2 PAGES)

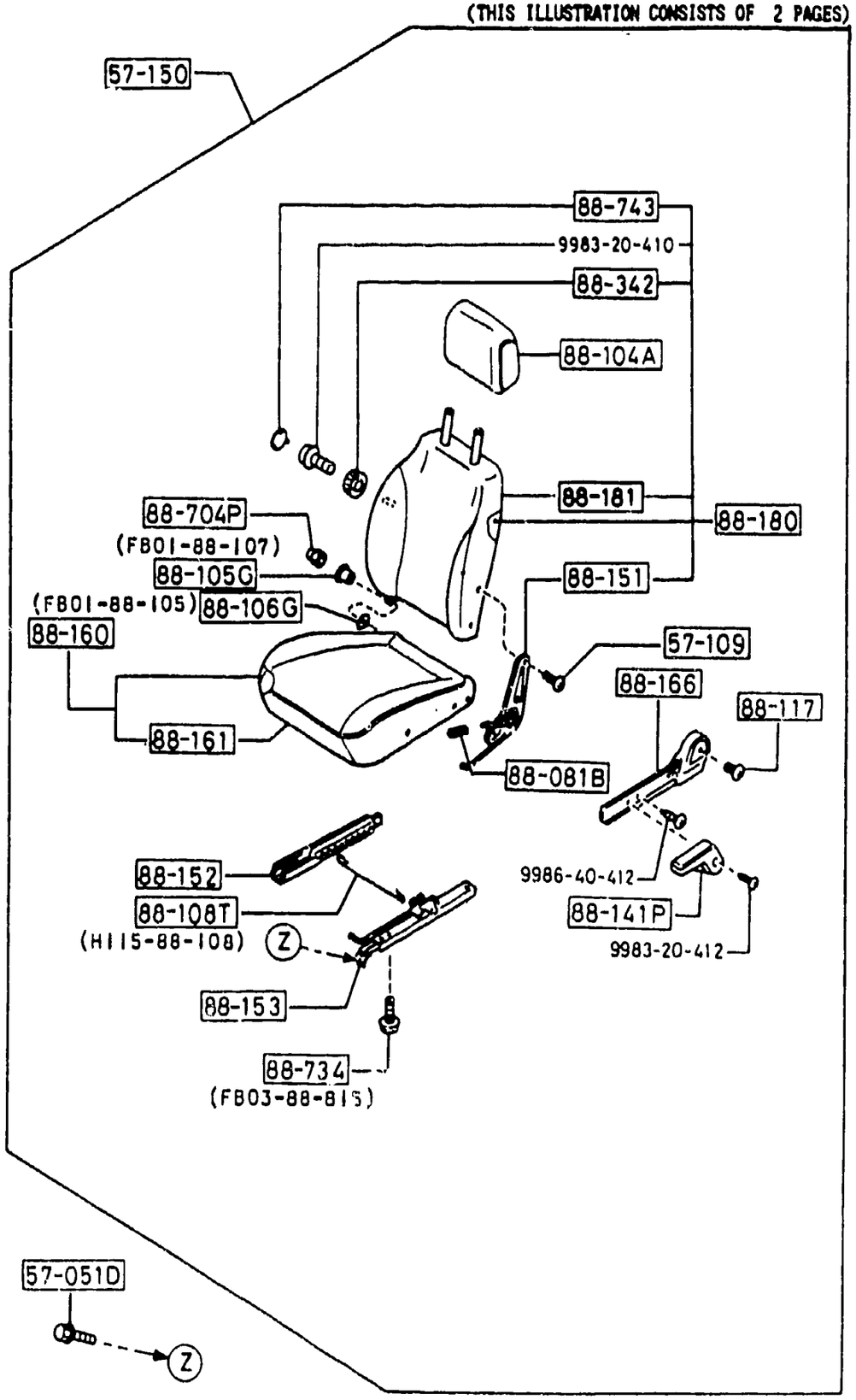

5700AB-2 FRONT SEATS (CONVERTIBLE) (CLOTH)

SEE ILLUSTRATION/S AT FRAME 2 - C10

ITEM NO.	D-CODE	DESCRIPTION	PART NO	QTY	MODEL/DESCRIPTION	REMARKS
	57 051D	BOLT, SET	UB40-57-05X	8		
	57 100	SEAT (R), FRONT	FB67-57-100	1		
		DARK GRAY/GRAY	07			
		BLUE	48			
	57 109	SCREW, KNUCKLE	0259-57-109	4		
	57 150	SEAT (L), FRONT	FB67-57-150	1		
		DARK GRAY/GRAY	07			
		BLUE	48			
	88 081A	KNOB (R), KNUCKLE	B001-88-081	1		
		DARK GRAY	09			
		BLUE	48			
	88 081B	KNOB (L), KNUCKLE	B001-88-091	1		
		DARK GRAY	09			
		BLUE	48			
	88 101	KNUCKLE (R), RECLINING	FB01-88-101	1		
	88 102	ADJUSTER, NO. 1	FB67-88-102	1		
	88 103	ADJUSTER, NO. 2	FB01-88-103B	1		
	88 104A	RESTRAINT, HEAD	FB67-88-140	2		
		DARK GRAY/GRAY	07			
		BLUE	48			
	88 105G	BUSHING, HINGE	FB01-88-107	1		
			FB68-88-107	1		
	88 106G	WASHER, HINGE	FB01-88-105	2		
			FB68-88-105	1		
	88 108T	WIRE, RELEASE	FB01-88-106	1		
			H115-88-108	1		
	88 109K	SCREW, KNUCKLE	B095-88-109	2		
	88 110	CUSHION (R), FRONT SEAT	FB67-88-110	1		
		DARK GRAY/GRAY	07			
		BLUE	48			
	88 111	TRIM (R), SEAT CUSHION	FB67-88-111	1		
		DARK GRAY/GRAY	07			
		BLUE	48			
	88 116	COVER (R), KNUCKLE	F044-88-127A	1		
		DARK GRAY	07			
		BLUE	48			
	88 117	SCREW, KNUCKLE	1243-88-117	2		
	88 130	BACK (R), FRONT SEAT	FB67-88-130	1		
		DARK GRAY/GRAY	07			
		BLUE	48			
	88 131	TRIM (R), SEAT BACK	FB67-88-131	1		

5700AB-3 FRONT SEATS (CONVERTIBLE) (CLOTH)

SEE ILLUSTRATION/S AT FRAME 2 - C10

ITEM NO.	D-CODE	DESCRIPTION	PART NO.	QTY	MODEL/DESCRIPTION	REMARKS
	88 131 (CONT'D)	DARK GRAY/GRAY	07			
		BLUE	48			
	88 141P	LEVER, LIFTER	FA58-88-831	1		
		DARK GRAY	07			
		BLUE	48			
	88 151	KNUCKLE (L), RECLINING	FB01-88-151	1		
	88 152	ADJUSTER, NO. 3	FB01-88-152B	1		
	88 153	ADJUSTER, NO. 4	FB67-88-153	1		
	88 160	CUSHION (L), FRONT SEAT	FB67-88-160	1		
		DARK GRAY/GRAY	07			
		BLUE	48			
	88 161	TRIM (L), SEAT CUSHION	FB67-88-161	1		
		DARK GRAY/GRAY	07			
		BLUE	48			
	88 166	COVER (L), KNUCKLE	FB03-88-177A	1		
		DARK GRAY	07			
		BLUE	48			
	88 180	BACK (L), FRONT SEAT	FB67-88-180	1		
		DARK GRAY/GRAY	07			
		BLUE	48			
	88 181	TRIM (L), SEAT BACK	FB67-88-181	1		
		DARK GRAY/GRAY	07			
		BLUE	48			
	88 336	RING, STOPPER	FA58-88-336	1		
	88 342	DIAL, LUMBAR SUPPORT	FB03-88-385	1		
		GRAY	07			
		BLUE	48			
	88 704P	NUT	B092-88-519	2		
	88 734	BOLT	FB03-88-815	4		
			B092-88-818	4		
	88 743	COVER, DIAL	FB03-88-386	1		
		GRAY	07			
		BLUE	48			

(THIS ILLUSTRATION CONSISTS OF 4 PAGES)

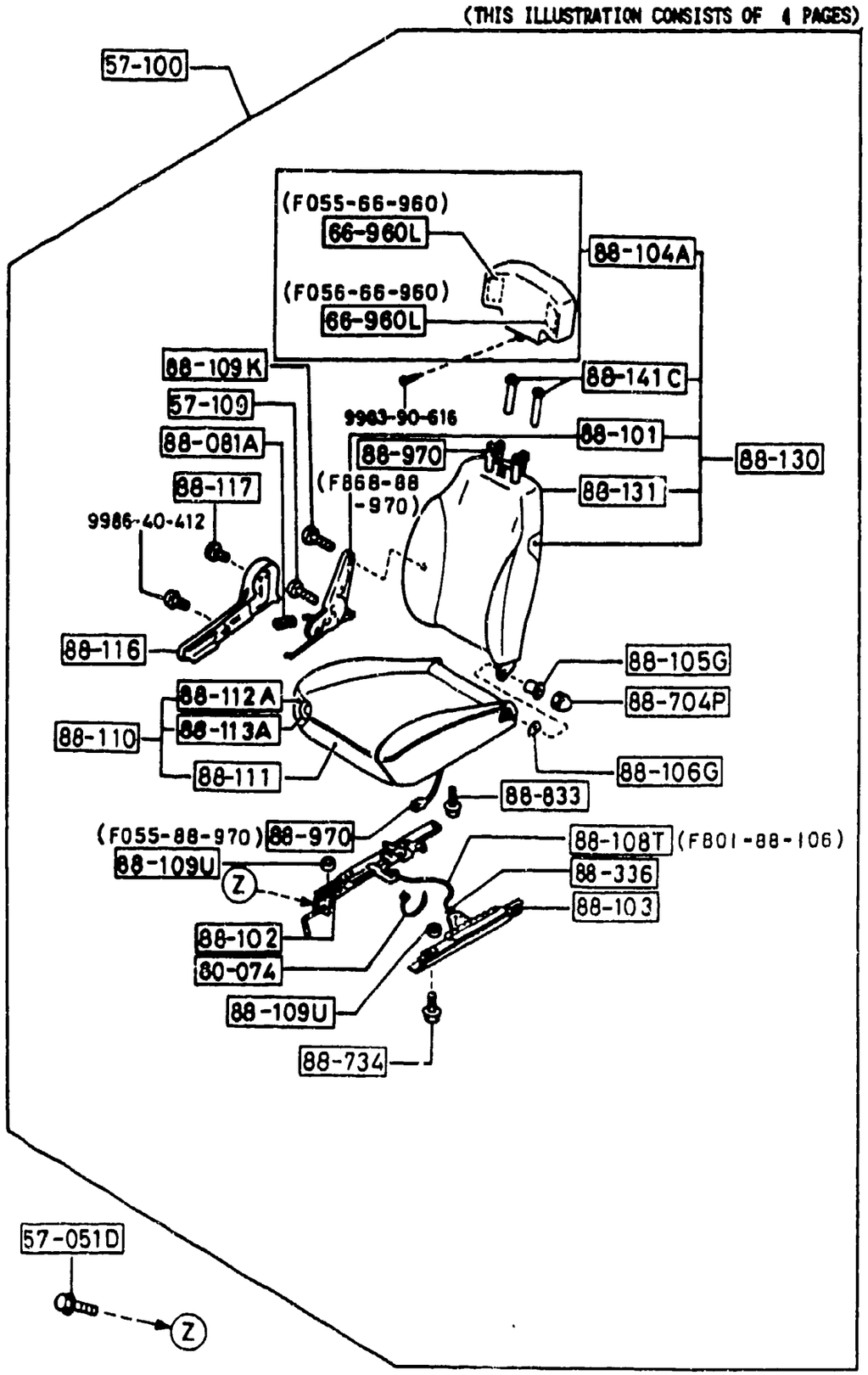

(THIS ILLUSTRATION CONSISTS OF 4 PAGES)

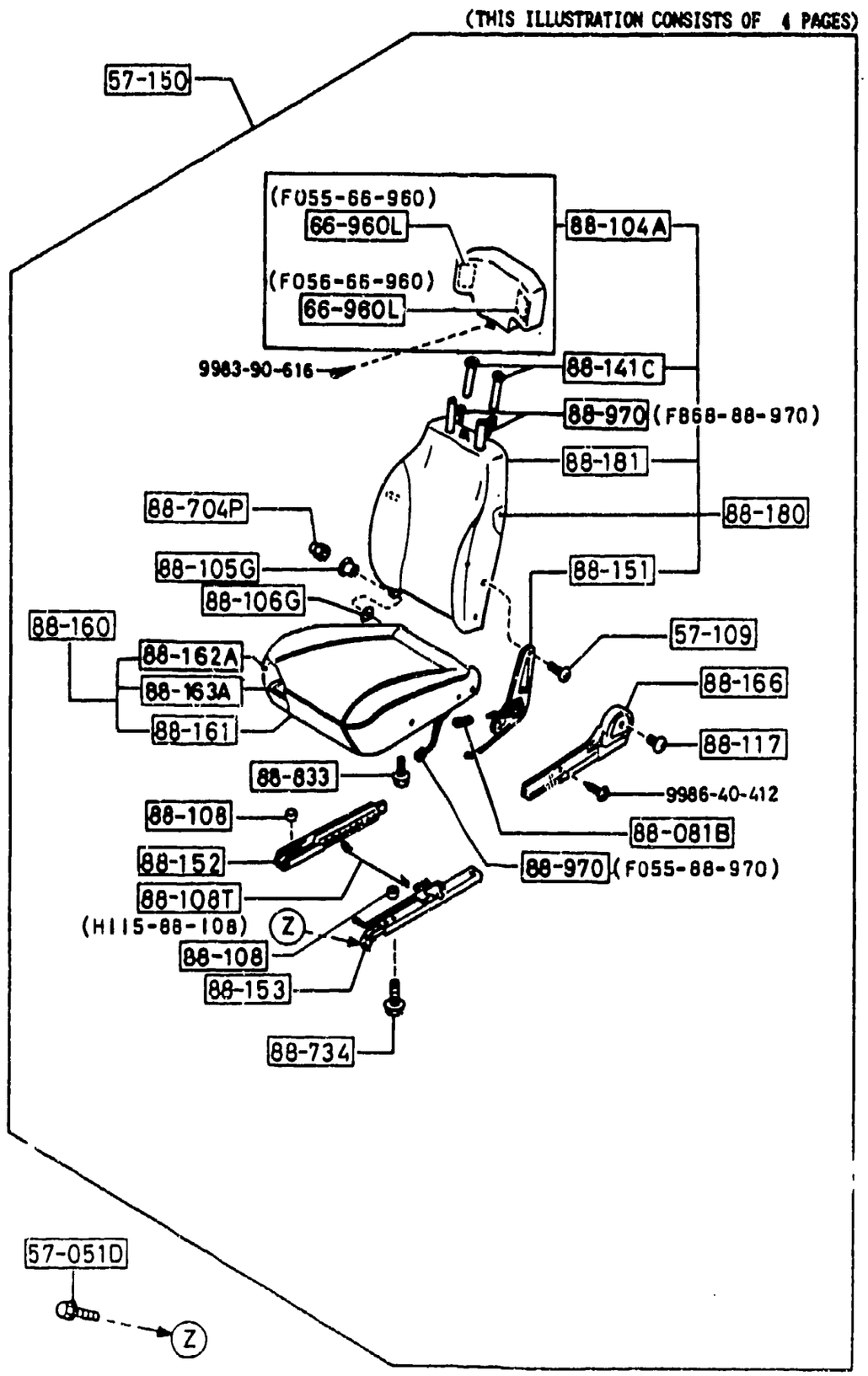

(HEADREST RAINT TRIMSET)

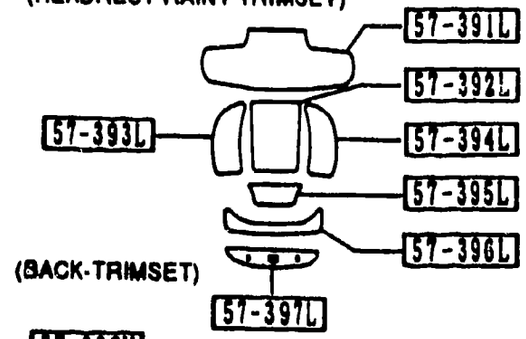

(BACK-TRIMSET)

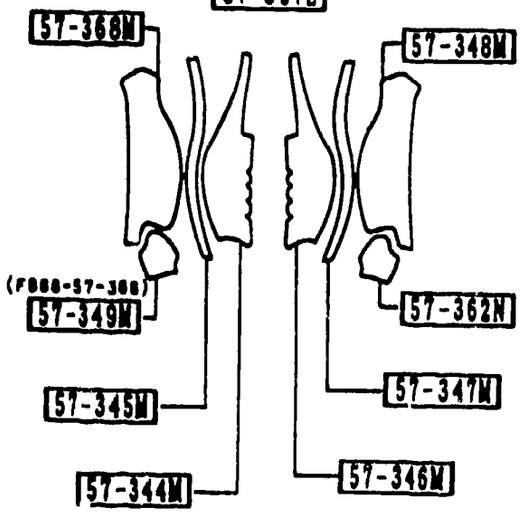

(CUSHION-TRIMSET)

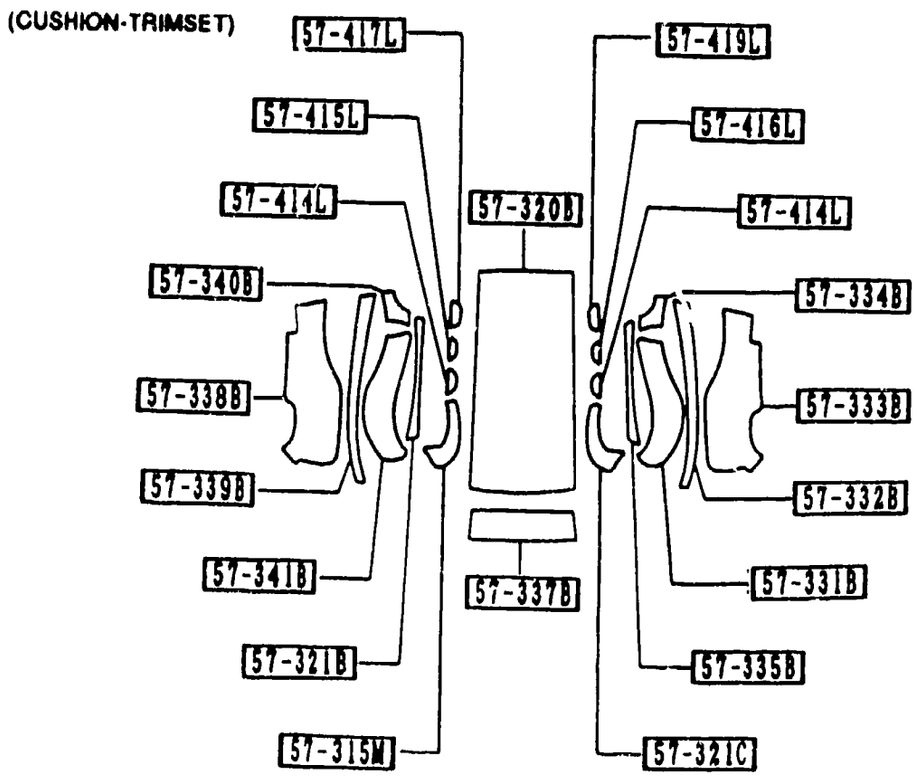

(THIS ILLUSTRATION CONSISTS OF 4 PAGES)

(TRIM-SET RH)

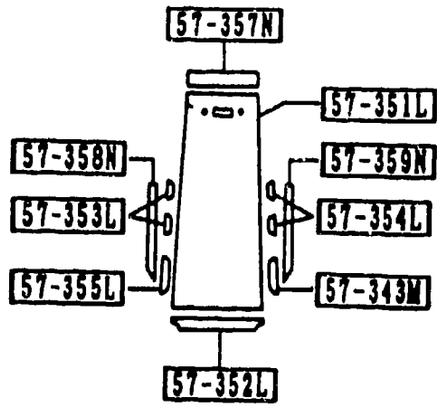

(HEADREST RAINT TRIMSET)

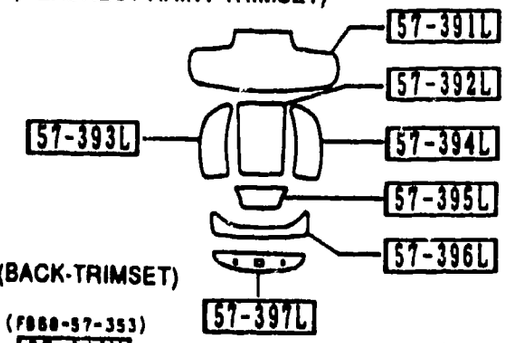

(BACK-TRIMSET)

(F868-57-353)

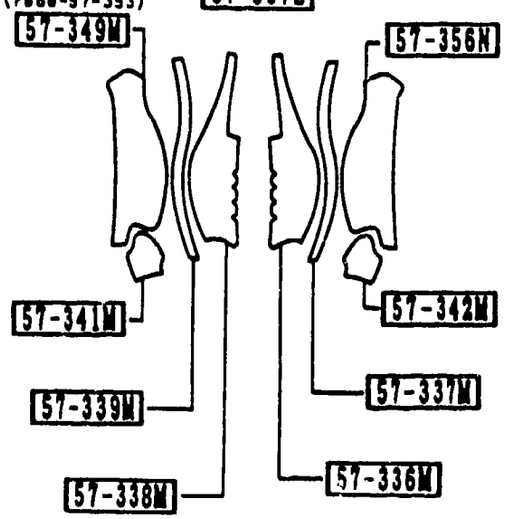

(CUSHION-TRIMSET)

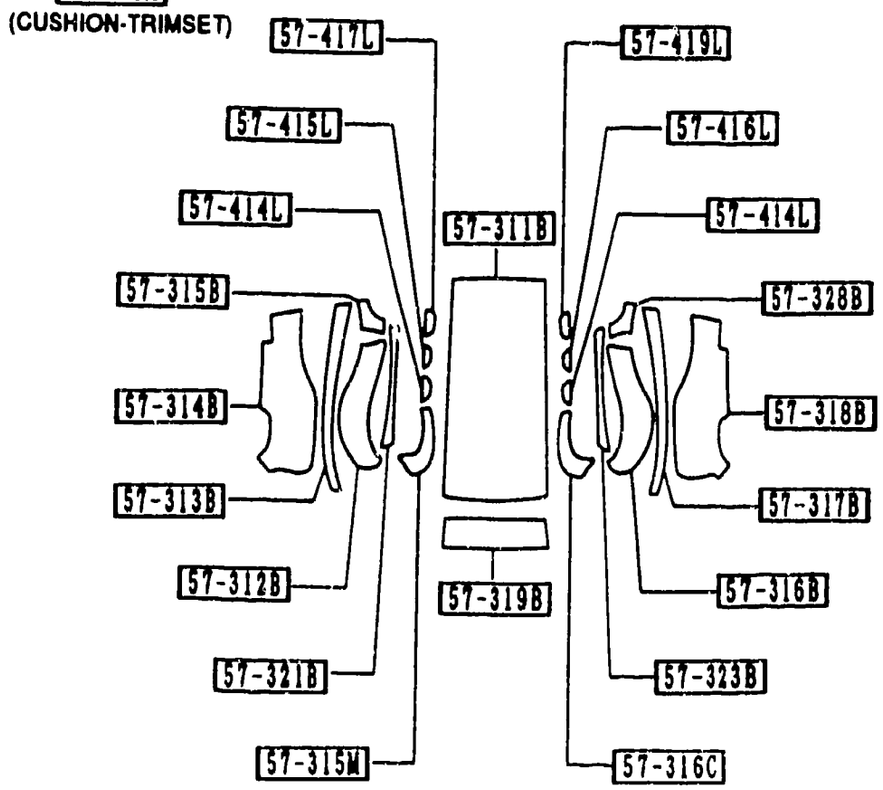

(THIS ILLUSTRATION CONSISTS OF 4 PAGES)

(TRIM-SET LH)

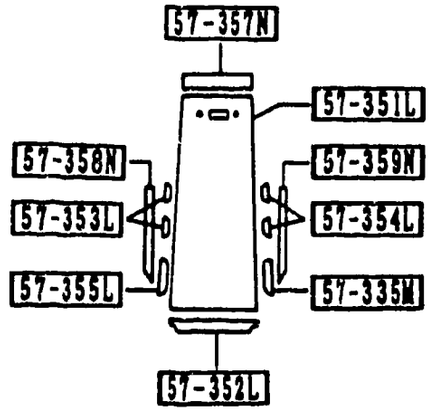

5700AC-3 FRONT SEATS (CONVERTIBLE) (LEATHER)

SEE ILLUSTRATION/S AT FRAME 2 - F10

ITEM NO.	D-CODE	DESCRIPTION	PART NO.	QTY	MODEL/DESCRIPTION	REMARKS
	57 051D	BOLT, SET	U840-57-05X	8		
	57 100	SEAT (R), FRONT	FB69-57-100	1		
		DARK GRAY	07			
		BLUE	48			
	57 109	SCREW, KNUCKLE	2155-57-109	4		
	57 150	SEAT (L), FRONT	FB69-57-150	1		
		DARK GRAY	07			
		BLUE	48			
	66 960L	SPEAKER (L), W/ BOX & AMP.	0000-81-5822	2		
			0000-81-5823	2		
	66 965A	CORD, SPEAKER	F055-66-970	2		
	88 081A	KNOB (R), KNUCKLE	B001-88-081	1		
		DARK GRAY	09			
		BLUE	48			
	88 081B	KNOB (L), KNUCKLE	B001-88-091	1		
		DARK GRAY	09			
		BLUE	48			
	88 101	KNUCKLE (R), RECLINING	FB01-88-101	1		
	88 102	ADJUSTER, NO. 1	FB67-88-102	1		
	88 103	ADJUSTER, NO. 2	FB01-88-103B	1		
	88 104A	RESTRAINT, HEAD	FB68-88-140	2		
		DARK GRAY	07			
		BLUE	48			
	88 105G	BUSHING, HINGE	FB68-88-107	2		
	88 106G	WASHER, HINGE	FB01-88-105	2		
	88 108	ROD	FB44-88-109	4		
	88 108T	WIRE, RELEASE	FB01-88-106	1		
			H115-88-108	1		
	88 109K	SCREW, KNUCKLE	B095-88-109	4		
	88 110	CUSHION (R), FRONT SEAT	FB68-88-110	1		
		DARK GRAY	07			
		BLUE	48			
	88 111	TRIM (R), SEAT CUSHION	FB68-88-111	1		
		DARK GRAY	07			
		BLUE	48			
	88 116	COVER (R), KNUCKLE	F044-88-127A	1		
		DARK GRAY	07			
		BLUE	48			
	88 117	SCREW, KNUCKLE	1243-88-117	2		
	88 130	BACK (R), FRONT SEAT	FB68-88-130	1		
		DARK GRAY	07			

SEE ILLUSTRATION/S AT FRAME 2 - F10

ITEM NO.	D-CODE	DESCRIPTION	PART NO.	QTY	MODEL/DESCRIPTION	REMARKS
	88 130 (CONT'D)	BLUE	48			
	88 131	TRIM (R), SEAT BACK	FB68-88-131	1		
		DARK GRAY	07			
		BLUE	48			
	88 141C	GUIDE, POLE-NO. 1	FB68-88-134	4		
		DARK GRAY	07			
		BLUE	48			
	88 151	KNUCKLE (L), RECLINING	FB01-88-151	1		
	88 152	ADJUSTER NO. 3	FB01-88-152B	1		
	88 153	ADJUSTER NO. 4	FB67-88-153	1		
	88 160	CUSHION (L), FRONT SEAT	FB68-88-160	1		
		DARK GRAY	07			
		BLUE	48			
	88 161	TRIM (L), SEAT CUSHION	FB68-88-161	1		
		DARK GRAY	07			
		BLUE	48			
	88 166	COVER (L), KNUCKLE	F044-88-177A	1		
		DARK GRAY	07			
		BLUE	48			
	88 180	BACK (L), FRONT SEAT	FB68-88-180	1		
		DARK GRAY	07			
		BLUE	48			
	88 181	TRIM (L), SEAT BACK	FB68-88-181	1		
		DARK GRAY	07			
		BLUE	48			
	88 336	RING, STOPPER	FA58-88-336	1		
	88 704P	NUT	B092-88-519	2		
	88 734	BOLT	B092-88-818	4		
	88 833	BOLT, ADJUSTER-FRT. SEAT	F044-88-833	4		
	88 970	CORD, SHORT-FRT. SEAT BACK	FB68-88-970	2		

(THIS ILLUSTRATION CONSISTS OF 2 PAGES)

SEAT TYPE / GRADE / SPECIFICATIONS	STD	STS	
	GXL	STD-4 SE-4	
SEAT TRIM	(CLOTH"B")	(CLOTH"A") (-7701)	(CLOTH"A") (7701-)
	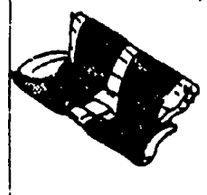		

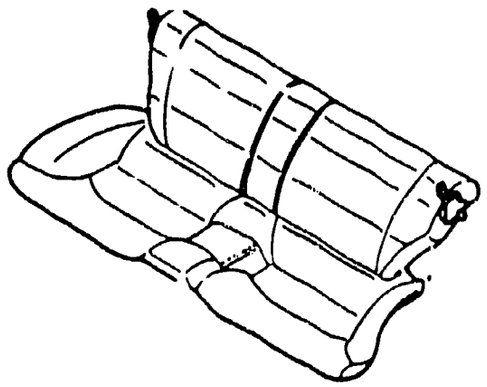

(THIS ILLUSTRATION CONSISTS OF 2 PAGES)

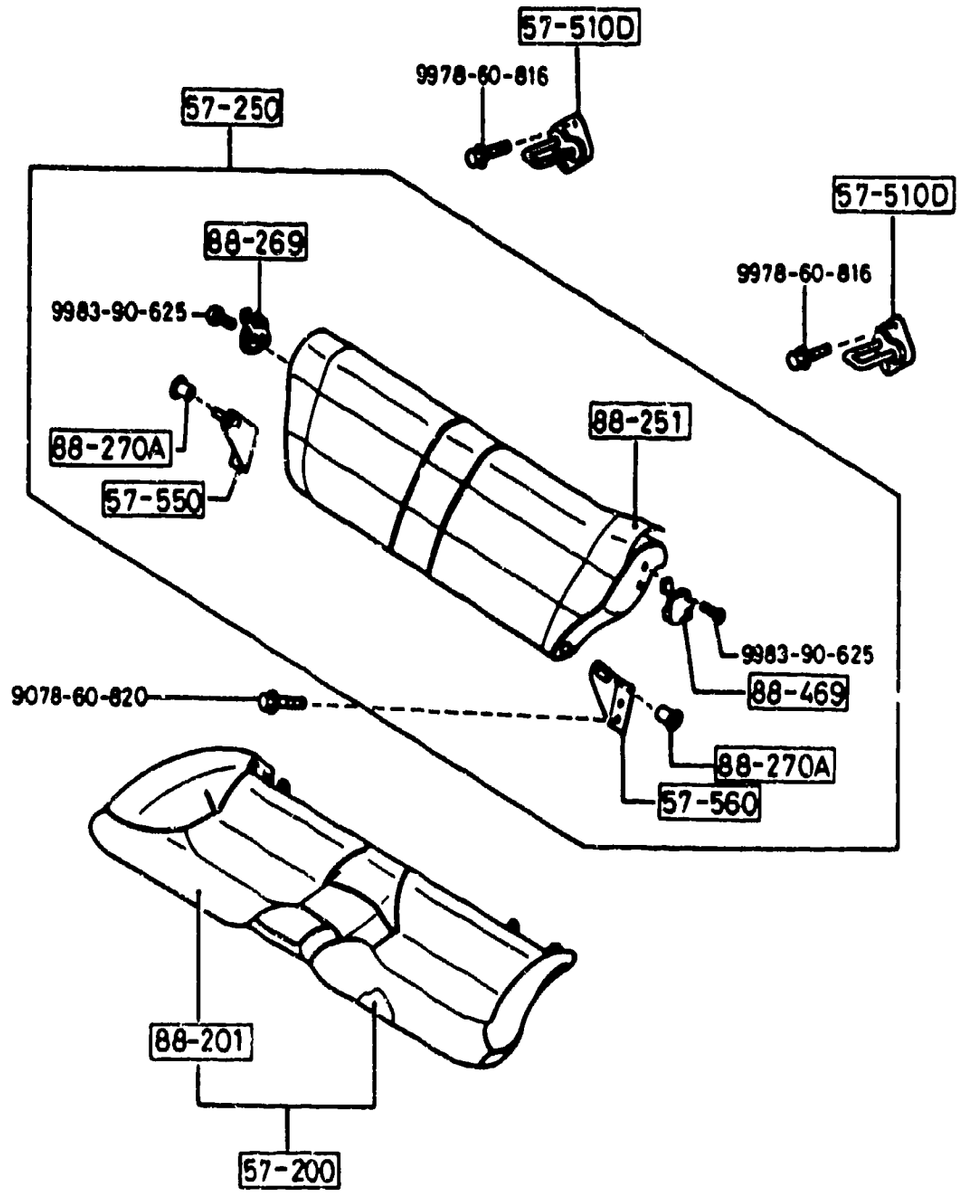

5750A-2 REAR SEATS (CLOTH)

SEE ILLUSTRATION/S AT FRAME 2 - J10

ITEM NO.	D-CODE	DESCRIPTION	PART NO.	QTY	MODEL/DESCRIPTION	REMARKS
	57 200	CUSHION, REAR SEAT	FB09-57-200	1	GXL STD TYPE	
		DARK GRAY/GRAY	07			
		RED	10			
		BLUE	48			
			FB38-57-200	1	STD, SE	
		DARK GRAY/GRAY	07			
		RED	10			
		BLUE	48			
	57 250	BACK, REAR SEAT	FB09-57-250	1	GXL STD TYPE	
		DARK GRAY/GRAY	07			
		RED	10			
		BLUE	48			
			FB38-57-250	1	STD, SE STS TYPE	
		DARK GRAY/GRAY	07			
		RED	10			
		BLUE	48			
	57 510D	STRIKER, RR. SEAT CUSHION	FB10-57-510	2		
	57 550	HINGE (R), REAR BACK	FB10-57-550	1		
	57 560	HINGE (L), REAR BACK	FB10-57-560	1		
	88 201	TRIM, REAR SEAT CUSHION	FB09-88-201A	1	GXL STD TYPE	
		DARK GRAY/GRAY	07			
		RED	10			
		BLUE	48			
			FB38-88-201A	1	STD, SE STS TYPE	
		DARK GRAY/GRAY	07			
		RED	10			
		BLUE	48			
	88 251	TRIM, REAR SEAT BACK	FB09-88-251	1	GXL STD TYPE	
		DARK GRAY/GRAY	07			
		RED	10			
		BLUE	48			
			FB38-88-251	1	STD, SE STS TYPE	
		DARK GRAY/GRAY	07			
		RED	10			
		BLUE	48			
	88 269	CATCH (R), RR. SEAT BACK	FB10-88-269	1		

5750A-3 REAR SEATS (CLOTH)

SEE ILLUSTRATION/S AT FRAME 2 - J10

ITEM NO.	D-CODE	DESCRIPTION	PART NO	QTY	MODEL/DESCRIPTION	REMARKS
	88 270A	TUBE	B001-88-270	2		
	88 469	CATCH (L), RR. SEAT BACK	FB10-88-469	1		

SECTION INDEX -- BODY

STARTING LOCATION	SECT NO	SECTION NAME
2 - C 3	0900A	KEY SETS
2 - E 3	5000	FRONT BUMPER
2 - F 3	5005	RADIATOR GRILLE
2 - G 3	5010A	REAR BUMPER
2 - H 3	5030A	WINDOW MOULDINGS
2 - I 3	5040A	BODY MOULDINGS
2 - J 3	5060A	SIDE PROTECTORS
2 - K 3	5100	HEAD LAMPS
2 - L 3	5103	HEAD LAMP RETRACTORS
2 - M 3	5105	FRONT COMBINATION LAMPS
2 - C 4	5110A	REAR COMBINATION LAMPS
2 - E 4	5120	LICENSE LAMPS
2 - F 4	5125	INTERIOR LAMPS
2 - G 4	5130	OVERHEAD CONSOLE (COUPE)
2 - H 4	5170	ORNAMENTS
2 - I 4	5180	COWL & EXTRACTOR GILLES
2 - K 4	5230	HOOD
2 - L 4	5260	TRUNK LID (CONVERTIBLE)
2 - M 4	5310	BODY PANELS (FRONT) (COUPE)
2 - N 4	5310A	BODY PANELS (FRONT) (CONVERTIBLE)
2 - C 5	5320	BODY PANELS (FENDER & WHEEL APRON) (COUPE)
2 - D 5	5320B	BODY PANELS (FENDER & WHEEL APRON) (CONVERTIBLE)
2 - E 5	5330	BODY PANELS (DASH & COWL PANEL)
2 - F 5	5340A	BODY PANELS (SIDE) (COUPE)
2 - H 5	5340AA	BODY PANELS (SIDE) (CONVERTIBLE)
2 - K 5	5360A	BODY PANELS (ROOF) (COUPE)
2 - L 5	5370	BODY PANELS (FLOOR) (COUPE)
2 - M 5	5370A	BODY PANELS (FLOOR) (CONVERTIBLE)
2 - C 6	5390	FLOOR ATTACHMENTS (COUPE)
2 - E 6	5390A	FLOOR ATTACHMENTS (CONVERTIBLE)
2 - G 6	5500	DASHBOARD EQUIPMENTS (COUPE) (W O ANTI-LOCK BRAKE SYSTEM)
2 - I 6	5500A	DASHBOARD EQUIPMENTS (COUPE) (ANTI-LOCK BRAKE SYSTEM)
2 - J 6	5500B	DASHBOARD EQUIPMENTS (CONVERTIBLE)
2 - K 6	5520	METER HOOD
2 - L 6	5530	SPEEDOMETER CABLE
2 - M 6	5540	METER COMPONENTS (COUPE) (W O ANTI LOCK BRAKE SYSTEM)
2 - C 7	5540A	METER COMPONENTS (COUPE) (ANTI-LOCK BRAKE SYSTEM)
2 - E 7	5540B	METER COMPONENTS (CONVERTIBLE)
2 - F 7	5560	DASHBOARD & RELATED PARTS
2 - I 7	5570	CONSOLE
2 - K 7	5580	VENTILATOR
2 - C 8	5700A	FRONT SEATS (COUPE)
2 - C 9	5700AA	FRONT SEATS (COUPE) (LEATHER)
2 - C10	5700AB	FRONT SEATS (CONVERTIBLE) (CLOTH)
2 - F10	5700AC	FRONT SEATS (CONVERTIBLE) (LEATHER)
2 - J10	5750A	REAR SEATS (CLOTH)
2 - C11	5750AA	REAR SEATS (LEATHER)
2 - H11	5790A	SEAT BELTS
2 - J11	5800A	FRONT DOORS (COUPE)
2 - K11	5800AA	FRONT DOORS (CONVERTIBLE)
2 - C12	5830A	FRONT DOOR MECHANISMS (COUPE)
2 - H12	5830AA	FRONT DOOR MECHANISMS (CONVERTIBLE)
2 - C13	5840A	FRONT DOOR TRIMS & RELATED PARTS (COUPE)
2 - K13	5840AB	FRONT DOOR TRIMS & RELATED PARTS (CONVERTIBLE)
2 - N13	6100	HEATER
2 - C14	6110	HEATER UNIT COMPONENTS
2 - D14	6115	HEATER CONTROLS COMPONENTS
2 - E14	6120	HEATER BLOWER COMPONENTS
2 - F14	6130	AIR CONDITIONER (W O AIR CONDITIONER)
2 - G14	6132A	CONDENSER PACKAGE
2 - I14	6142A	COMPRESSOR MOUNTING KIT COMPRESSOR CLUTCH ASSEMBLY & REPAIR PARTS
2 - J14	6152A	EVAPORATOR PACKAGE
2 - K14	6200	LIFT GATE
2 - L14	6230	LIFT GATE MECHANISMS (COUPE)
2 - N 4	6300A	WINDOW GLASSES
2 - C15	6330	SUNROOF (COUPE)
2 - E15	6330A	SOFT TOP (CONVERTIBLE)
2 - G15	6600B	SWITCHES & RELAYS (ENGINE) (W O TURBO)
2 - J15	6600BA	SWITCHES & RELAYS (ENGINE) (TURBO)
2 - M15	6610	DASHBOARD SWITCHES (MANUAL OPERATING)
2 - N15	6611	COMBINATION SWITCH
2 - C16	6612	CLUSTER SWITCH
2 - D16	6615	POWER WINDOW SWITCHES
2 - E16	6620	DOOR SWITCH
2 - F16	6630	RELAYS & CPU (BODY)
2 - G16	6635	HORNS
2 - H16	6640	AUTO CRUISE CONTROL SYSTEM
2 - I16	6680	AUDIO SYSTEMS (RADIO & TAPE DECK)

5750AA-1 REAR SEATS (LEATHER)

(THIS ILLUSTRATION CONSISTS OF 4 PAGES)

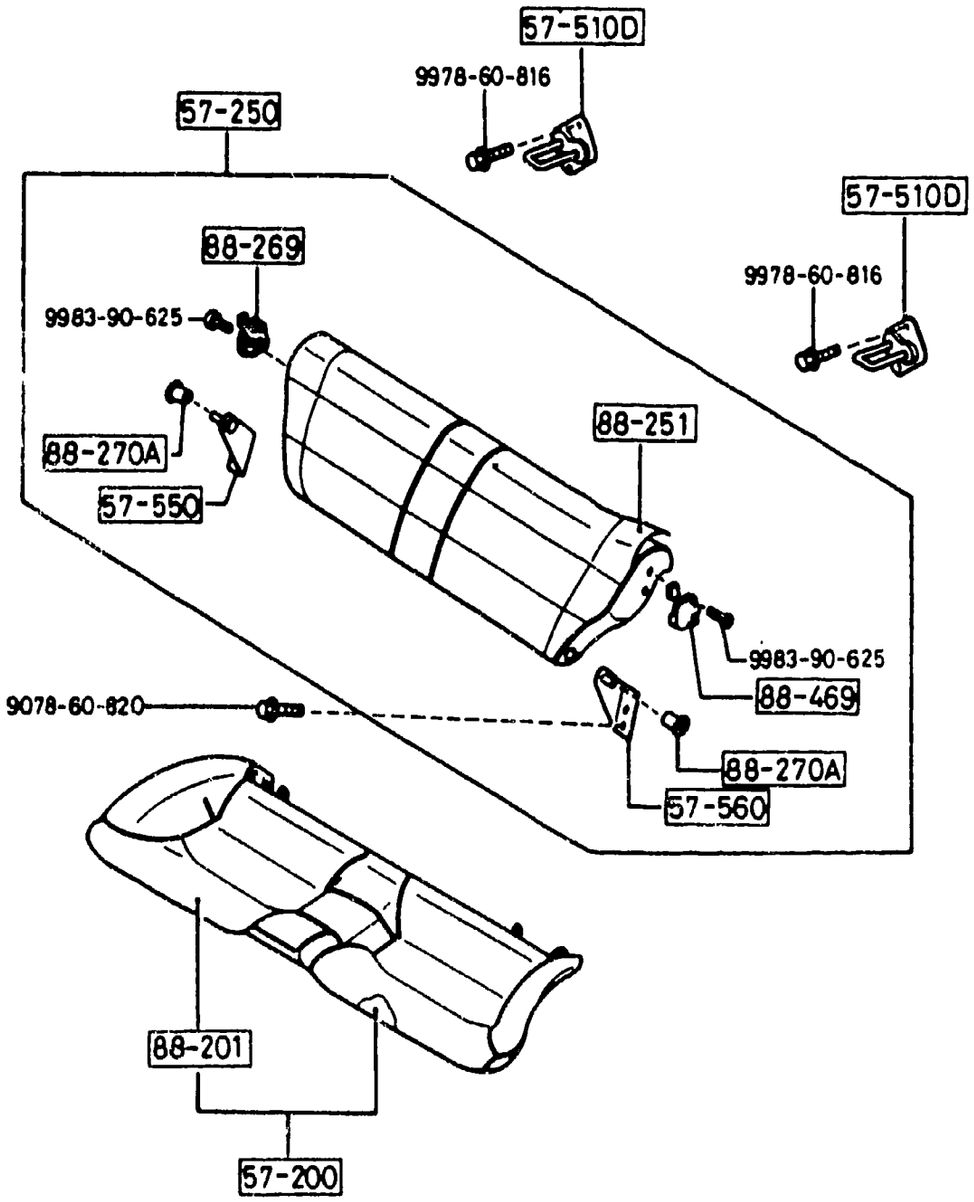

(THIS ILLUSTRATION CONSISTS OF 4 PAGES)

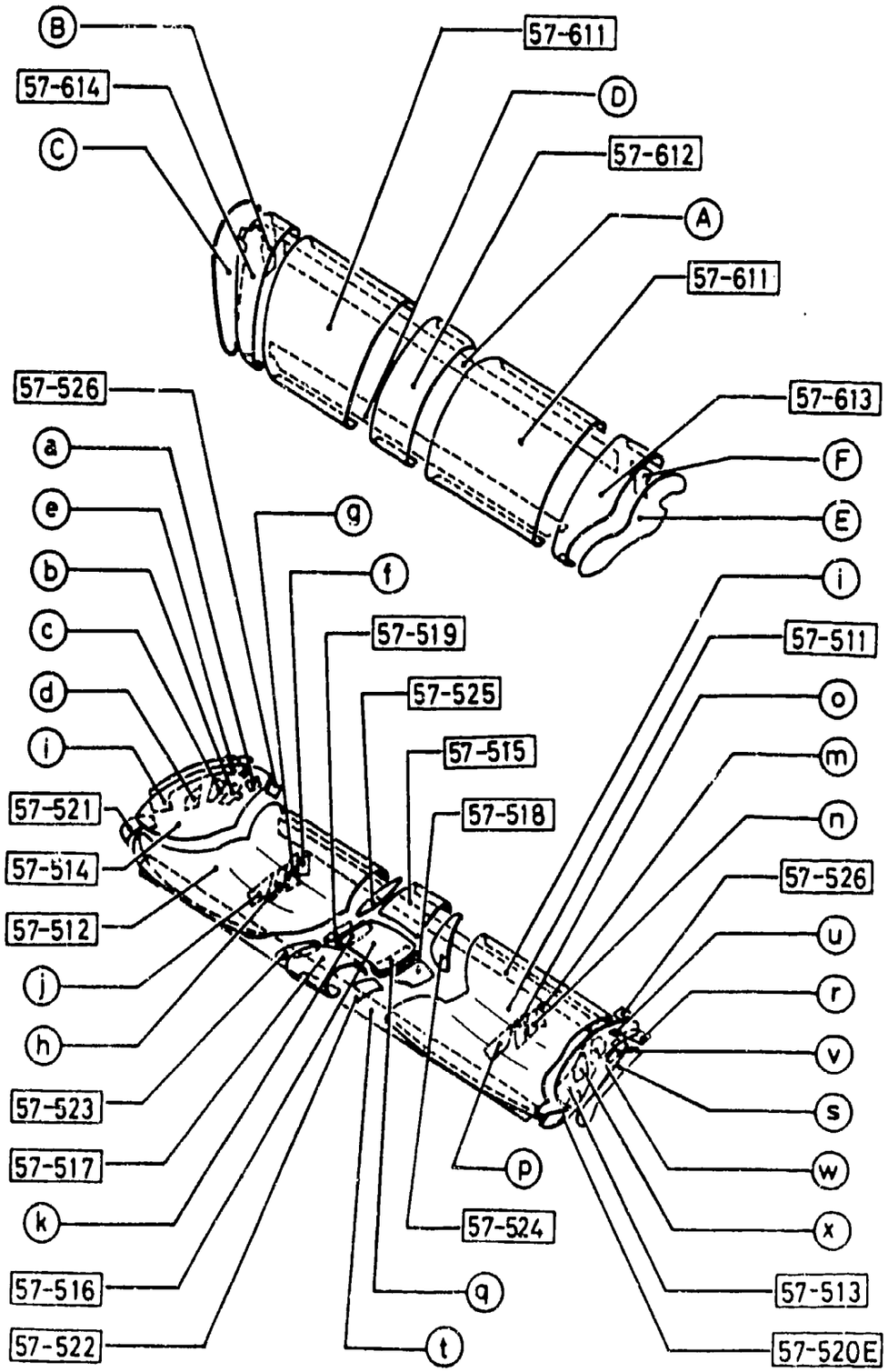

TRIM REAR BACK (THIS ILLUSTRATION CONSISTS OF 4 PAGES)

(NOTES)

A. PARTS INDICATED AS [redacted] ARE MADE OF VINYL.
B. LEATHER PATCHES ARE AVAILABLE FROM YOUR MAZDA DISTRIBUTORS UNDER DIFFERENT PART NUMBER THAN INDICATED.
PLEASE REFER TO PARTS BULLETIN FOR DETAILS.

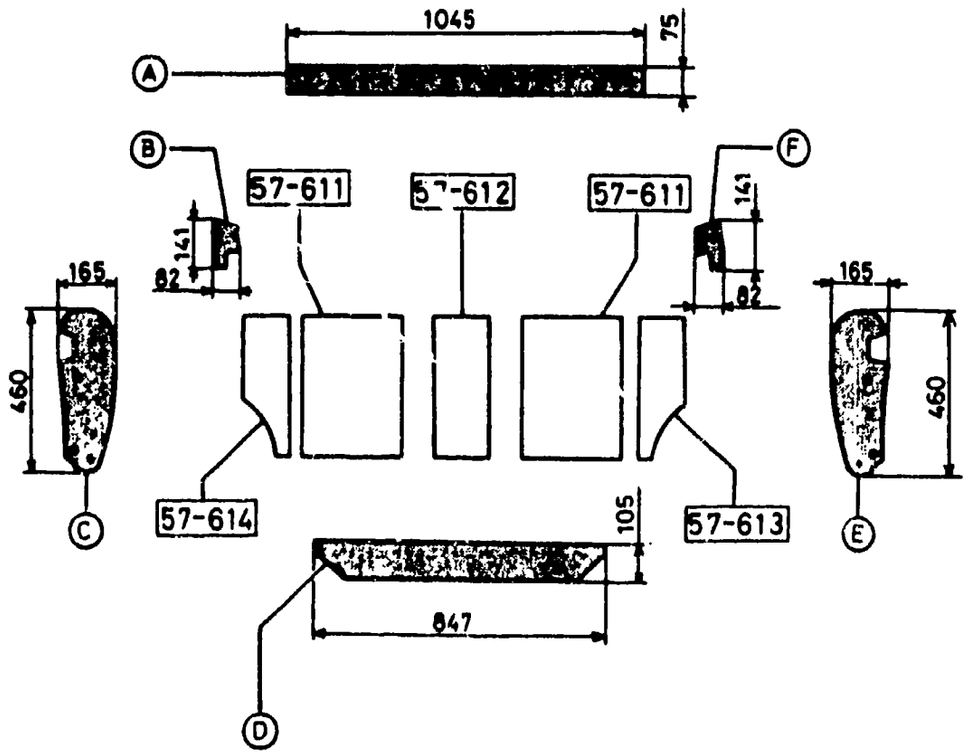

TRIM REAR CUSHION (THIS ILLUSTRATION CONSISTS OF 4 PAGES)

(NOTES)

A. PARTS INDICATED AS [redacted] ARE MADE OF VINYL.
B. LEATHER PATCHES ARE AVAILABLE FROM YOUR MAZDA DISTRIBUTORS UNDER DIFFERENT PART NUMBER THAN INDICATED.
PLEASE REFER TO PARTS BULLETIN FOR DETAILS.

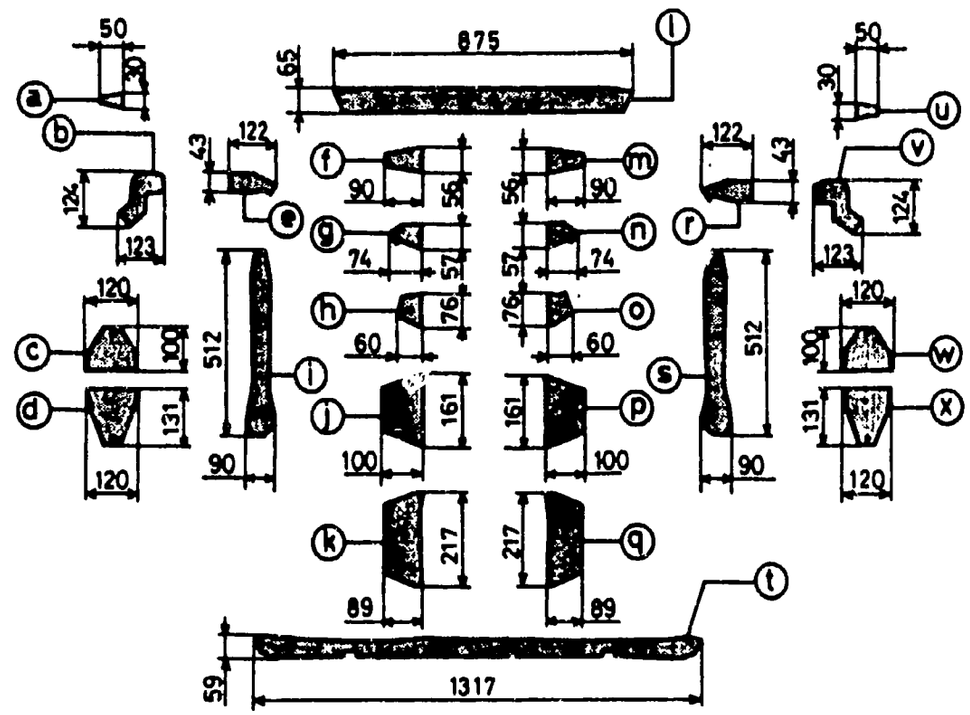

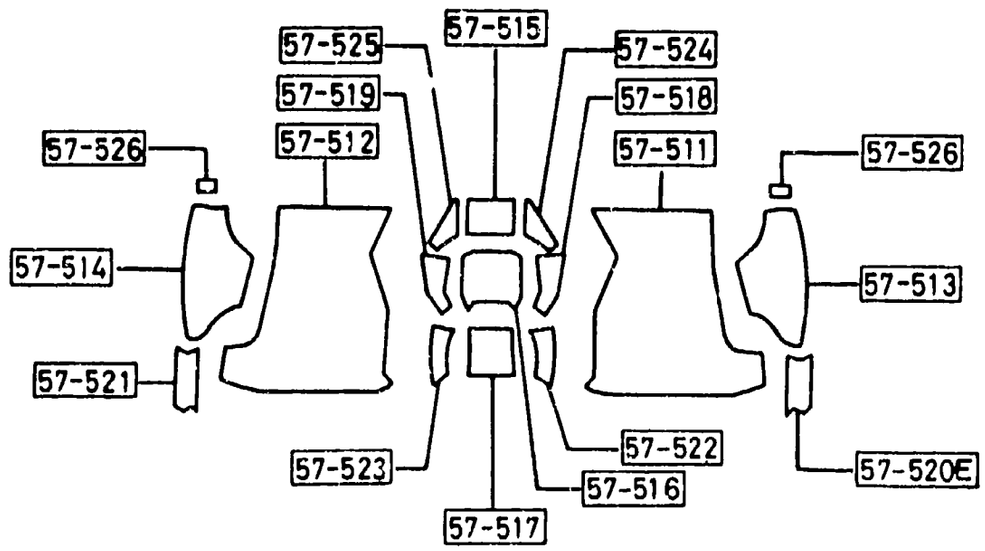

5750AA-3 REAR SEATS (LEATHER)

SEE ILLUSTRATION/S AT FRAME 2 - C11

ITEM NO.	D-CODE	DESCRIPTION	PART NO.	QTY	MODEL/DESCRIPTION	REMARKS
	57 200	CUSHION, REAR SEAT	FB41-57-200	1		
		DARK GRAY	07			
		RED	10			
		BLUE	48			
	57 250	BACK, REAR SEAT	FB41-57-25Y	1		
		DARK GRAY	07			
		RED	10			
		BLUE	48			
	57 510D	STRIKER, RR. SEAT CUSHION	FB10-57-510	2		
	57 511	TRIM NO. 1, CUSHION-REAR	FB10-57-511	1		
		DARK GRAY	07			
		RED	10			
		BLUE	48			
	57 512	TRIM NO. 2, CUSHION REAR	FB10-57-512	1		
		DARK GRAY	07			
		RED	10			
		BLUE	48			
	57 513	TRIM NO. 3, CUSHION-REAR	FB10-57-513	1		
		DARK GRAY	07			
		RED	10			
		BLUE	48			
	57 514	TRIM NO. 4, CUSHION-REAR	FB10-57-514	1		
		DARK GRAY	07			
		RED	10			
		BLUE	48			
	57 515	TRIM NO. 5, CUSHION-REAR	FB10-57-515	1		
		DARK GRAY	07			
		RED	10			
		BLUE	48			
	57 516	TRIM NO. 6, CUSHION-REAR	FB10-57-516	1		
		DARK GRAY	07			
		RED	10			
		BLUE	48			
	57 517	TRIM NO. 7, CUSHION-REAR	FB10-57-517	1		
		DARK GRAY	07			
		RED	10			
		BLUE	48			
	57 518	TRIM NO. 8, CUSHION-REAR	FB10-57-518	1		
		DARK GRAY	07			
		RED	10			
		BLUE	48			

5750AA-4 REAR SEATS (LEATHER)

SEE ILLUSTRATION/S AT FRAME 2 - C11

ITEM NO.	D-CODE	DESCRIPTION	PART NO.	QTY	MODEL/DESCRIPTION	REMARKS
	57 519	TRIM NO. 9, CUSHION-REAR	FB10-57-519	1		
		DARK GRAY	07			
		RED	10			
		BLUE	48			
	57 520E	TRIM NO. 10, CUSHION-REAR	FB10-57-520	1		
		DARK GRAY	07			
		RED	10			
		BLUE	48			
	57 521	TRIM NO. 11, CUSHION-REAR	FB10-57-521	1		
		DARK GRAY	07			
		RED	10			
		BLUE	48			
	57 522	TRIM NO. 12, CUSHION-REAR	FB10-57-522	1		
		DARK GRAY	07			
		RED	10			
		BLUE	48			
	57 523	TRIM NO. 13, CUSHION-REAR	FB10-57-523	1		
		DARK GRAY	07			
		RED	10			
		BLUE	48			
	57 524	TRIM NO. 14, CUSHION-REAR	FB10-57-524	1		
		DARK GRAY	07			
		RED	10			
		BLUE	48			
	57 525	TRIM NO. 15, CUSHION-REAR	FB10-57-525	1		
		DARK GRAY	07			
		RED	10			
		BLUE	48			
	57 526	TRIM NO. 16, CUSHION-REAR	FB10-57-526	2		
		DARK GRAY	07			
		RED	10			
		BLUE	48			
	57 550	HINGE (R), REAR BACK	FB10-57-550	1		
	57 560	HINGE (L), REAR BACK	FB10-57-560	1		
	57 611	TRIM NO. 1, BACK-REAR	FB10-57-611	2		
		DARK GRAY	07			
		RED	10			
		BLUE	48			
	57 612	TRIM NO. 2, BACK-REAR	FB10-57-612	1		
		DARK GRAY	07			
		RED	10			

5750AA-5 REAR SEATS (LEATHER)

ITEM NO.	D-CODE	DESCRIPTION	PART NO.	QTY	MODEL/DESCRIPTION	REMARKS
	57 612 (CONT'D)	BLUE	48			
	57 613	TRIM NO. 3, BACK-REAR	FB10-57-613	1		
		DARK GRAY	07			
		RED	10			
		BLUE	48			
	57 614	TRIM NO. 4, BACK-REAR	FB10-57-614	1		
		DARK GRAY	07			
		RED	10			
		BLUE	48			
	88 201	TRIM, REAR SEAT CUSHION	FB41-88-201A	1		
		DARK GRAY	07			
		RED	10			
		BLUE	48			
	88 251	TRIM, REAR SEAT BACK	FB10-88-251	1		
		DARK GRAY	07			
		RED	10			
		BLUE	48			
	88 269	CATCH (R), RR. SEAT BACK	FB10-88-269	1		
	88 270A	TUBE	B001-88-270	2		
	88 469	CATCH (L), RR. SEAT BACK	FB10-88-469	1		

SEE ILLUSTRATION/S AT FRAME 2 - C11

5790A-1 SEAT BELTS

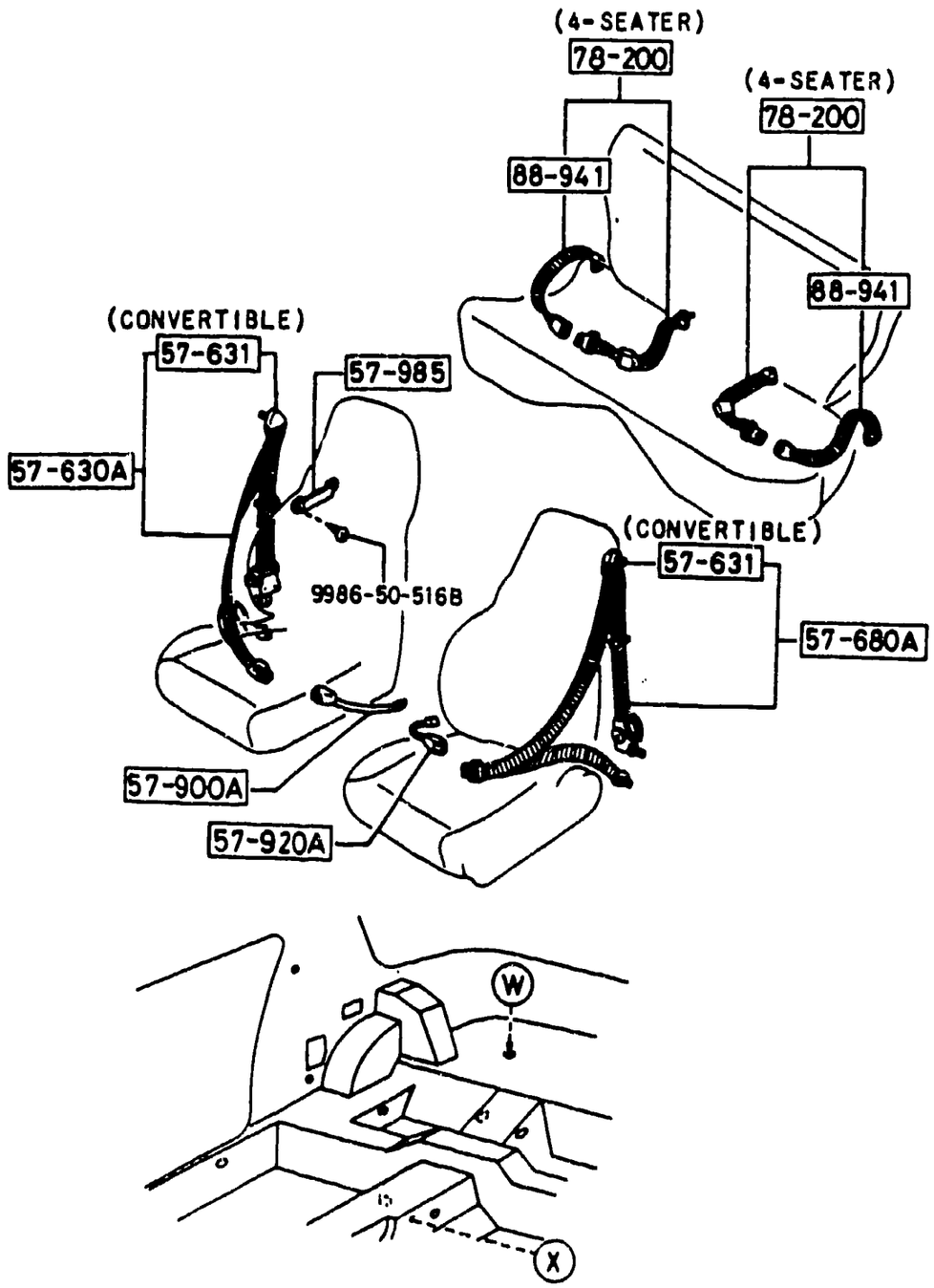

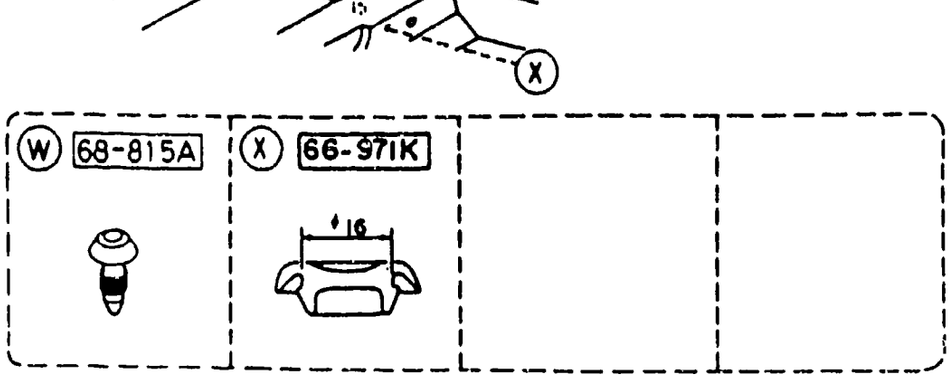

ITEM NO.	D-CODE	DESCRIPTION	PART NO.	QTY	MODEL/DESCRIPTION	REMARKS
	57 630A	BELT 'B' (R), FRONT SEAT	FB40-57-630A	1	COUPE EXTRA LENGTH	
		DARK GRAY	07			
		RED	10			
		BLUE	48			
			FB67-57-630B	1	CONV.	
		DARK GRAY	07			
		BLUE	48			
			FB10-57-630B	1	COUPE STD TYPE	
		DARK GRAY	07			
		RED	10			
		BLUE	48			
	57 631	COVER, SASH GUIDE	FB67-57-631	2	CONV.	
		DARK GRAY	07			
		BLUE	48			
	57 680A	BELT 'B' (L), FRONT SEAT	FB40-57-690A	1	COUPE EXTRA LENGTH	
		DARK GRAY	07			
		RED	10			
		BLUE	48			
			FB67-57-690B	1	CONV.	
		DARK GRAY	07			
		BLUE	48			
			FB05-57-690C	1	COUPE STD TYPE	
		DARK GRAY	07			
		RED	10			
		BLUE	48			
	57 900A	BELT 'A' (R), FRONT SEAT	FB10-57-620C	1		
		DARK GRAY	07			
		RED	10			
		BLUE	48			
	57 920A	BELT 'A' (L), FRONT SEAT	FB10-57-680A	1		
		DARK GRAY	07			
		RED	10			
		BLUE	48			
	57 985	PLATE, SEAT BELT SET	B120-57-985	2		
	68 815A	TACKER	1011-68-815	2		
	78 200	BELT, REAR SEAT	FB10-57-710	2	22	
		DARK GRAY	07			
		RED	10			
		BLUE	48			

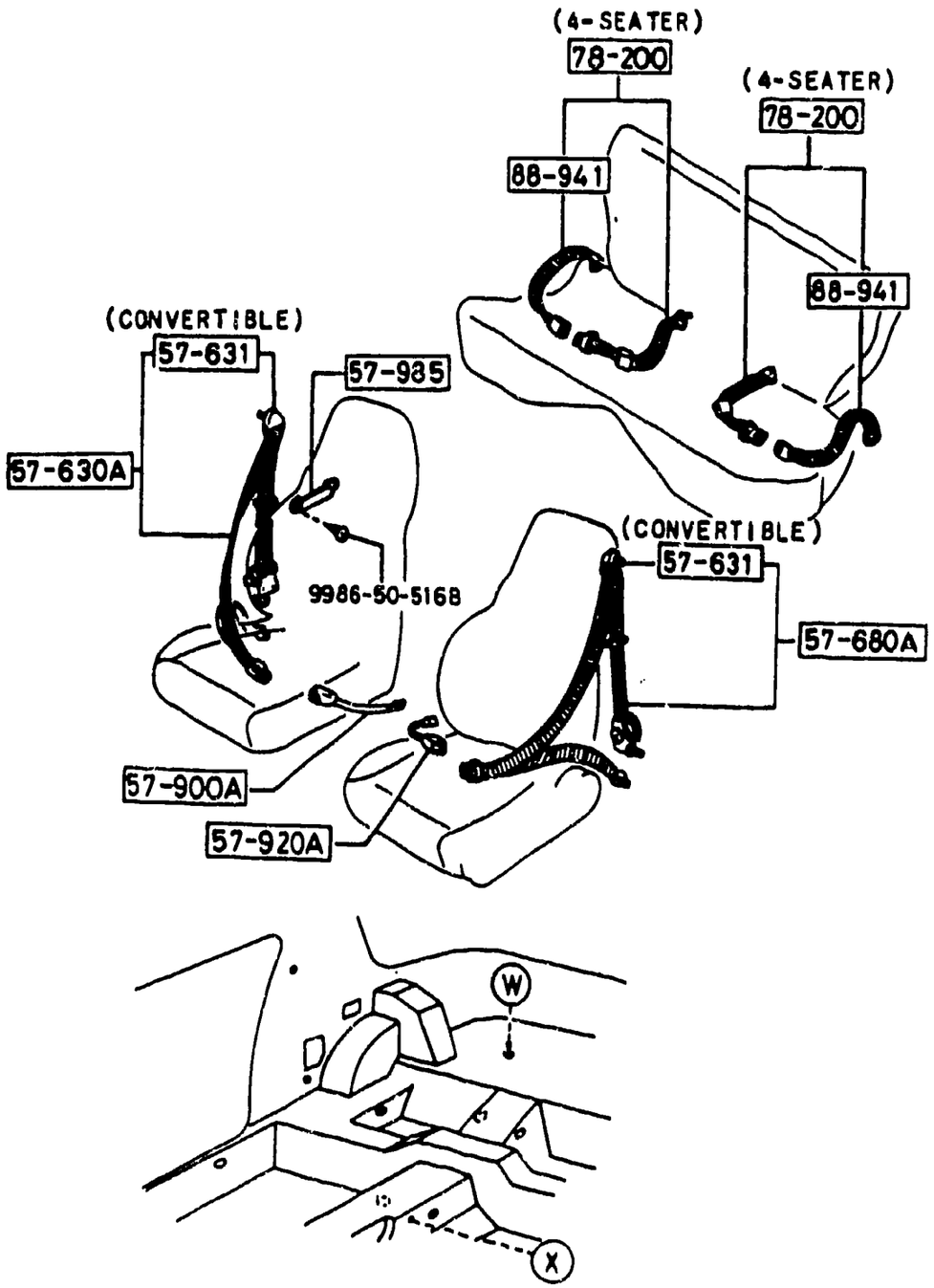

ITEM NO.	D-CODE	DESCRIPTION	PART NO.	QTY	MODEL/DESCRIPTION	REMARKS
	88 941	BELT 'A', REAR SEAT	FB10-57-720	2	22	
		DARK GRAY	07			
		RED	10			
		BLUE	48			

W 68-815A	X 66-971K		
	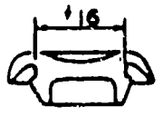		

5800A-1 FRONT DOORS (COUPE)

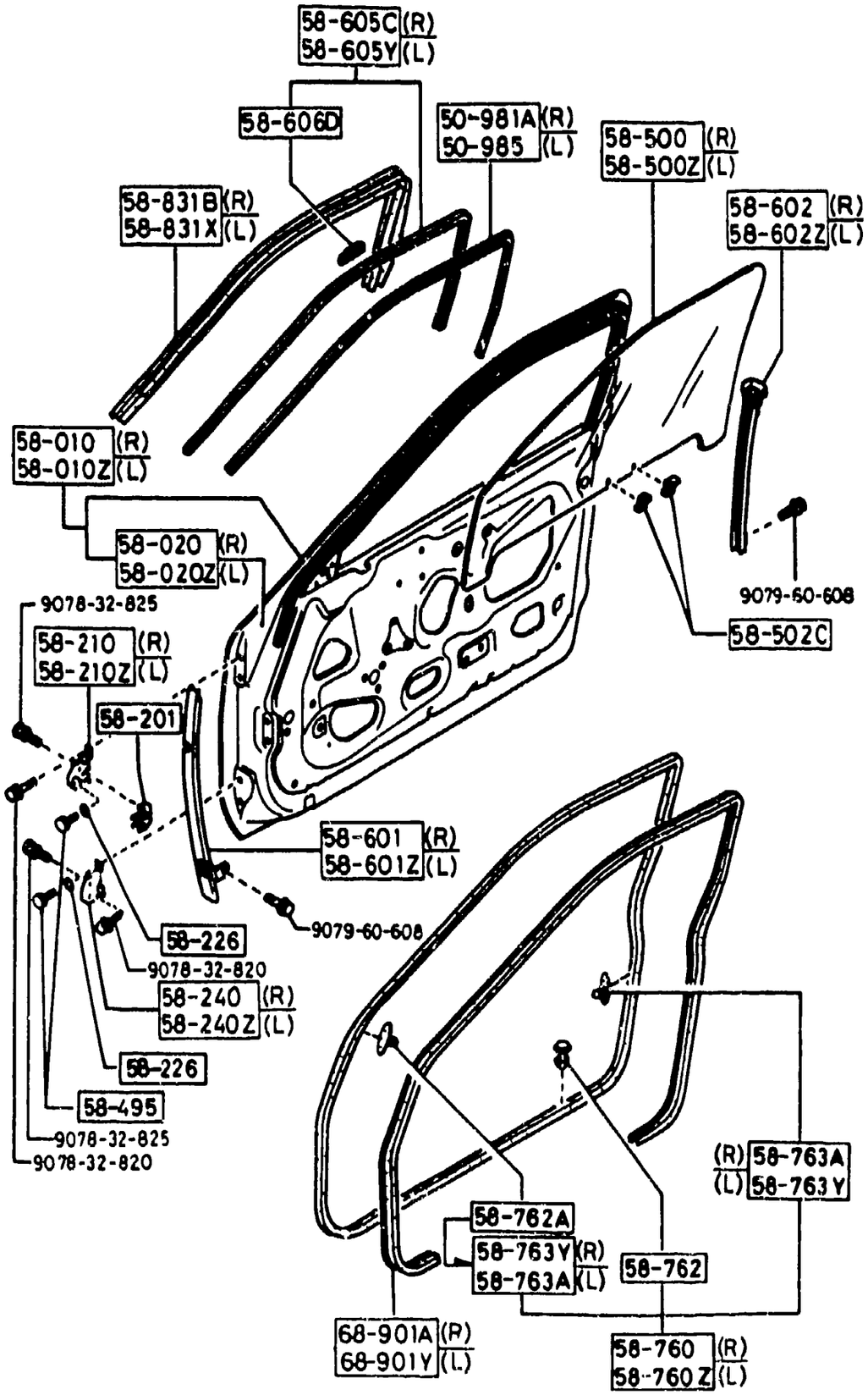

ITEM NO.	D-CODE	DESCRIPTION	PART NO.	QTY	MODEL/DESCRIPTION	REMARKS
	50 981A	MOULDING (R), SASH-DOOR	FB01-50-981B	1		
	50 985	MOULDING (L), SASH-DOOR	FB01-50-985B	1		
	58 010	BODY (R), FRONT DOOR	FB05-58-020H	1		
	58 010Z	BODY (L), FRONT DOOR	FB05-59-020H	1		
	58 020	PANEL (R), OUTER-FRONT DOOR	FB01-58-031D	1		
	58 020Z	PANEL (L), OUTER-FRONT DOOR	FB01-59-031D	1		
	58 201	SHIM, HINGE-DOOR	B092-58-201A	2		
	58 210	HINGE (R), DOOR-UPPER	FB01-58-210	1		
	58 210Z	HINGE (L), DOOR-UPPER	FB01-59-210	1		
	58 240	HINGE (R), DOOR-LOWER	B092-58-240	1		
	58 240Z	HINGE (L), DOOR-LOWER	B092-59-240	1		
	58 500	GLASS (R), DOOR-FRONT	FB01-58-511	1		
	58 500Z	GLASS (L), DOOR-FRONT	FB01-59-511	1		
	58 502C	GROMMET, SCREW	S084-58-502	4		
	58 601	GUIDE 'A' (R), GLASS	FB01-58-603A	1		
	58 601Z	GUIDE 'A' (L), GLASS	FB01-59-603A	1		
	58 602	GUIDE 'B' (R), GLASS	FB01-58-604A	1		
	58 602Z	GUIDE 'B' (L), GLASS	FB01-59-604A	1		
	58 605C	CHANNEL (R), GLASS RUN	FB01-58-60XD	1		
	58 605Y	CHANNEL (L), GLASS RUN	FB01-59-60XD	1		
	58 606D	ADJUSTER, GLASS-FRONT DOOR	FB01-58-606A	2		
	58 760	WEATHERSTRIP (R), DOOR	FB01-58-760C	1		
	58 760Z	WEATHERSTRIP (L), DOOR	FB01-59-760C	1		
	58 762	FASTENER	G031-58-762	52		
	58 762A	FASTENER	B092-58-762	2		-5921
	58 763A	FASTENER (R)	FB02-58-762A	2		5921-
	58 763Y	FASTENER (L)	FB02-59-762A	2		5921-
	58 831B	WEATHERSTRIP (R), RAIN RAIL	FB01-58-831E	1		
	58 831X	WEATHERSTRIP (L), RAIN RAIL	FB01-59-831E	1		
	68 901A	WELT (R), SEAMING	FB01-68-911	1		
		DARK GRAY	07			
		RED	10			
		BLUE	48			
	68 901Y	WELT (L), SEAMING	FB01-68-912	1		
		DARK GRAY	07			
		RED	10			
		BLUE	48			

5921 FC33* -106084

5800AA-1 FRONT DOORS (CONVERTIBLE)

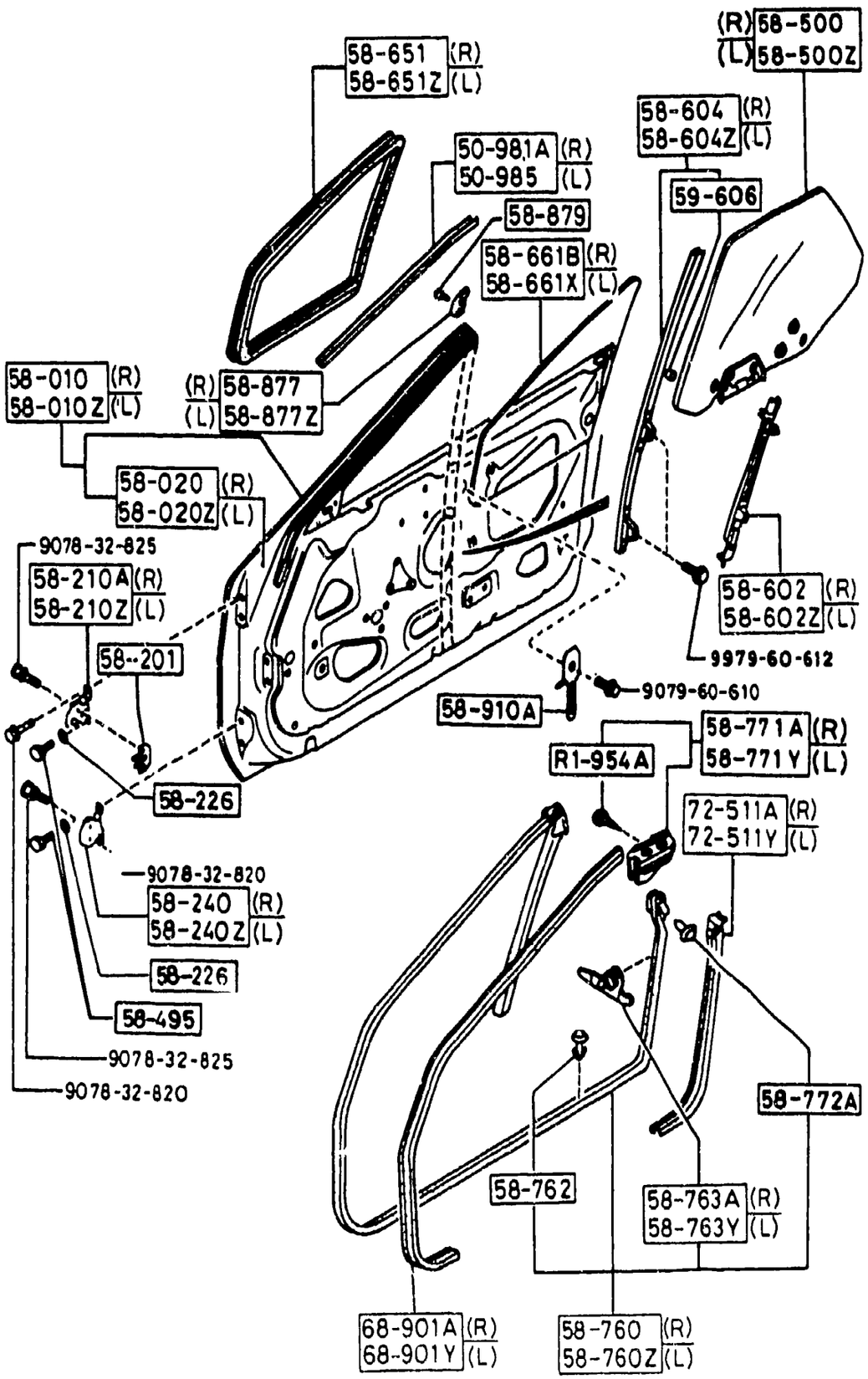

ITEM NO.	D-CODE	DESCRIPTION	PART NO	QTY	MODEL/DESCRIPTION	REMARKS
	50 981A	MOULDING (R), SASH-DOOR	FB67-50-981	1		
		<C>	FB67-50-981A	1	REQUIRES PROTECTOR: FB67-58-877C	
	50 985	MOULDING (L), SASH-DOOR	FB67-50-985	1		
		<C>	FB67-50-985A	1	REQUIRES PROTECTOR: FB67-58-877C	
	58 010	BODY (R), FRONT DOOR	FB67-58-020L	1		
	58 010Z	BODY (L), FRONT DOOR	FB67-59-020K	1		
	58 020	PANEL (R), OUTER-FRONT DOOR	FB67-58-031C	1		
	58 020Z	PANEL (L), OUTER-FRONT DOOR	FB67-59-031C	1		
	58 201	SHIM, HINGE-DOOR	B092-58-201	2		
	58 210	HINGE (R), DOOR-UPPER	FB01-58-210	1		
	58 210Z	HINGE (L), DOOR-UPPER	FB01-59-210	1		
	58 240	HINGE (R), DOOR-LOWER	B092-58-240	1		
	58 240Z	HINGE (L), DOOR-LOWER	B092-59-240	1		
	58 500	GLASS (R), DOOR-FRONT	FB67-58-510C	1		
	58 500Z	GLASS (L), DOOR-FRONT	FB67-59-510C	1		
		BLUE	48			
	58 602	GUIDE 'B' (R), GLASS	FB67-58-61XB	1		
	58 602Z	GUIDE 'B' (L), GLASS	FB67-59-61XB	1		
	58 604	CHANNEL (R), DIVISION-DOOR	FB67-58-6A0A	1		
	58 604Z	CHANNEL (L), DIVISION-DOOR	FB67-59-6A0A	1		
	58 651	WEATHERSTRIP (R)	FB67-58-651	1		
	58 651Z	WEATHERSTRIP (L)	FB67-59-651	1		
	58 661B	GLASS (R), QUARTER-FRONT DOOR	FB67-58-661B	1		
	58 661X	GLASS (L), QUARTER-FRONT DOOR	FB67-59-661B	1		
	58 760	WEATHERSTRIP (R), DOOR	FB67-58-760B	1		
	58 760Z	WEATHERSTRIP (L), DOOR	FB67-59-760B	1		
	58 762	FASTENER	G031-58-762	52		
	58 763A	FASTENER (R)	FB02-58-762A	2		
	58 763Y	FASTENER (L)	FB02-59-762A	2		
	58 771	WEATHERSTRIP (R), ROOF	FB67-58-770B	1		
	58 771Y	WEATHERSTRIP (L), CABIN SIDE	FB67-59-770F	1		
	58 772A	FASTENER	9926-40-531B	4		
	58 877	PROTECTOR (R), DOOR SASH	FB67-58-877B	1		
	58 877Z	PROTECTOR (L), DOOR SASH	FB67-59-877B	1		
	58 879	SCREW, PROTECTOR-SASH	FB67-58-879	4		
	58 910A	STOPPER, GLASS	FB67-58-910	2		
	68 901A	WELT (R), SEAMING	FB67-68-911A	1		
		GRAY	07			
		BLUE	48			

5800AA-2 FRONT DOORS (CONVERTIBLE)

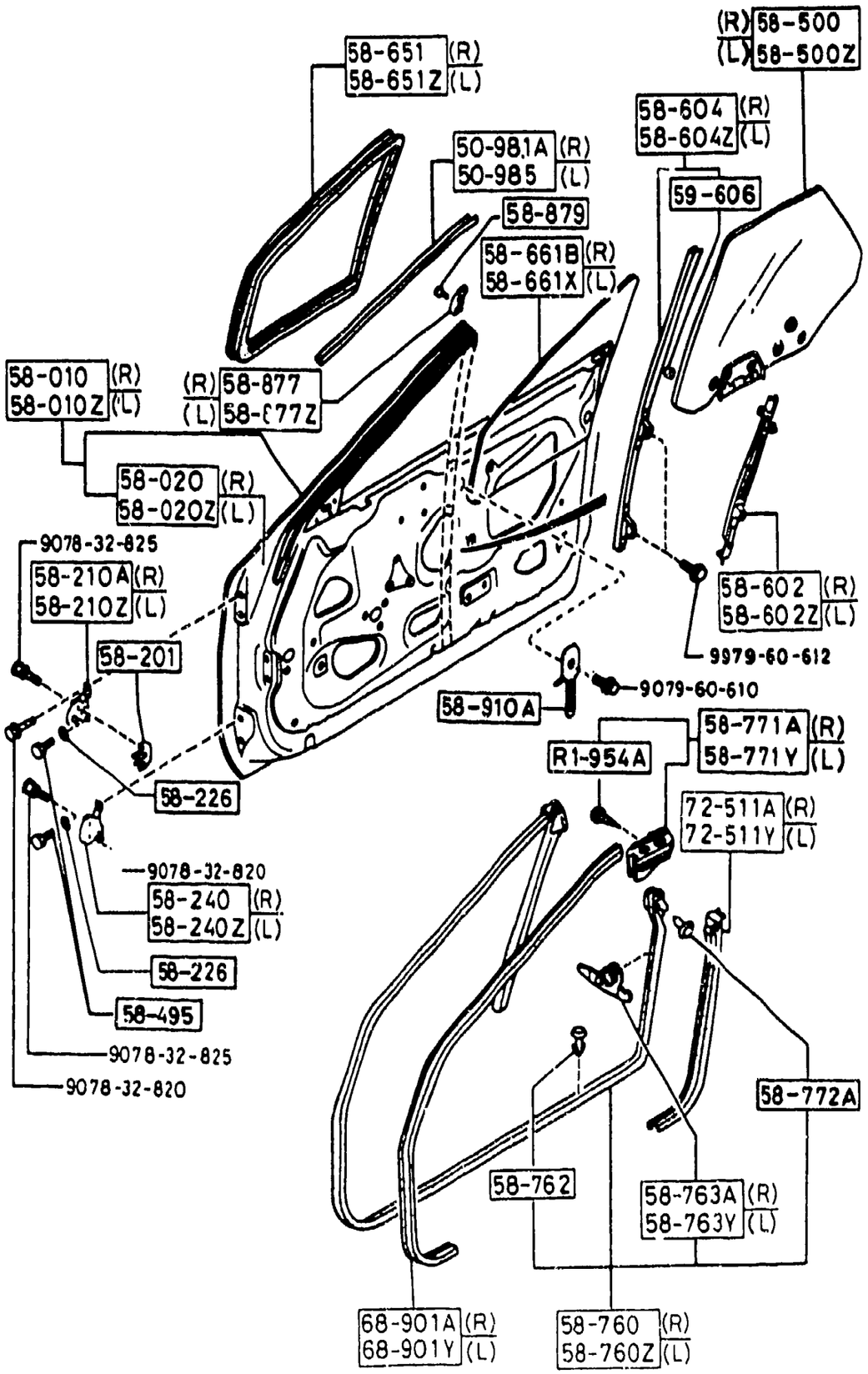

ITEM NO.	D-CODE	DESCRIPTION	PART NO	QTY	MODEL/DESCRIPTION	REMARKS
	68 901Y	WELT (L), SEAMING	FB67-68-912A	1		
		GRAY	07			
		BLUE	48			
	72 511A	WELT (R), SEAMING	FB67-68-921	1		
		GRAY	07			
		BLUE	48			
	72 511Y	WELT (L), SEAMING	FB67-68-922	1		
		GRAY	07			
		BLUE	48			

SECTION INDEX -- BODY

STARTING LOCATION	SECT NO	SECTION NAME
2 - C 3	0900A	KEY SETS
2 - E 3	5000	FRONT BUMPER
2 - F 3	5005	RADIATOR GRILLE
2 - G 3	5010A	REAR BUMPER
2 - H 3	5030A	WINDOW MOULDINGS
2 - I 3	5040A	BODY MOULDINGS
2 - J 3	5060A	SIDE PROTECTORS
2 - K 3	5100	HEAD LAMPS
2 - L 3	5103	HEAD LAMP RETRACTORS
2 - M 3	5105	FRONT COMBINATION LAMPS
2 C 4	5110A	REAR COMBINATION LAMPS
2 - E 4	5120	LICENSE LAMPS
2 - F 4	5125	INTERIOR LAMPS
2 - G 4	5130	OVERHEAD CONSOLE (COUPE)
2 - H 4	5170	ORNAMENTS
2 - I 4	5180	COWL & EXTRACTOR GILLES
2 - K 4	5230	HOOD
2 - L 4	5260	TRUNK LID (CONVERTIBLE)
2 - M 4	5310	BODY PANELS (FRONT) (COUPE
2 - N 4	5310A	BODY PANELS (FRONT) (CONVERTIBLE)
2 - C 5	5320	BODY PANELS (FENDER & WHEEL APRON) (COUPE)
2 - D 5	5320B	BODY PANELS (FENDER & WHEEL APRON) (CONVERTIBLE)
2 - E 5	5330	BODY PANELS (DASH & COWL PANEL)
2 - F 5	5340A	BODY PANELS (SIDE) (COUPE)
2 - H 5	5340AA	BODY PANELS (SIDE) (CONVERTIBLE)
2 - K 5	5360A	BODY PANELS (ROOF) (COUPE)
2 - L 5	5370	BODY PANELS (FLOOR) (COUPE)
2 - M 5	5370A	BODY PANELS (FLOOR) (CONVERTIBLE)
2 - C 6	5390	FLOOR ATTACHMENTS (COUPE)
2 - E 6	5390A	FLOOR ATTACHMENTS (CONVERTIBLE)
2 - G 6	5500	DASHBOARD EQUIPMENTS (COUPE) (W O ANTI-LOCK BRAKE SYSTEM)
2 - I 6	5500A	DASHBOARD EQUIPMENTS (COUPE) (ANTI-LOCK BRAKE SYSTEM)
2 - J 6	5500B	DASHBOARD EQUIPMENTS (CONVERTIBLE)
2 - K 6	5520	METER HOOD
2 - L 6	5530	SPEEDOMETER CABLE
2 - M 6	5540	METER COMPONENTS (COUPE W O ANTI-LOCK BRAKE SYSTEM)
2 - C 7	5540A	METER COMPONENTS (COUPE) (ANTI-LOCK BRAKE SYSTEM)
2 - E 7	5540B	METER COMPONENTS (CONVERTIBLE)
2 - F 7	5560	DASHBOARD & RELATED PARTS
2 - I 7	5570	CONSOLE
2 - K 7	5580	VENTILATOR
2 - C 8	5700A	FRONT SEATS (COUPE)
2 - C 9	5700AA	FRONT SEATS (COUPE) (LEATHER)
2 - C10	5700AB	FRONT SEATS (CONVERTIBLE) (CLOTH)
2 - F10	5700AC	FRONT SEATS (CONVERTIBLE) (LEATHER)
2 - J10	5750A	REAR SEATS (CLOTH)
2 - C11	5750AA	REAR SEATS (LEATHER)
2 - H11	5790A	SEAT ...
2 - J11	5800A	FRONT DOORS (COUPE)
2 - F11	5800AA	FRONT DOORS (CONVERTIBLE)
2 - C12	5830A	FRONT DOOR MECHANISMS (COUPE)
2 - H12	5830AA	FRONT DOOR MECHANISMS (CONVERTIBLE)
2 - C13	5840A	FRONT DOOR TRIMS & RELATED PARTS (COUPE)
2 - K13	5840AB	FRONT DOOR TRIMS & RELATED PARTS (CONVERTIBLE)
2 - N13	6100	HEATER
2 - C14	6110	HEATER UNIT COMPONENTS
2 - D14	6115	HEATER CONTROLS COMPONENTS
2 - E14	6120	HEATER BLOWER COMPONENTS
2 - F14	6130	AIR CONDITIONER (W O AIR CONDITIONER)
2 - G14	6132A	CONDENSER PACKAGE
2 - I14	6142A	COMPRESSOR MOUNTING KIT COMPRESSOR CLUTCH ASSEMBLY & REPAIR PARTS
2 - J14	6152A	EVAPORATOR PACKAGE
2 - K14	6200	LIFT GATE
2 - L14	6230	LIFT GATE MECHANISMS (COUPE)
2 - N14	6300A	WINDOW GLASSES
2 - C15	6330	SUNROOF (COUPE)
2 E15	6330A	SOFT TOP (CONVERTIBLE)
2 - G15	6600B	SWITCHES & RELAYS (ENGINE) (W O TURBO)
2 - J15	6600BA	SWITCHES & RELAYS (ENGINE) (TURBO)
2 M1:	6610	DASHBOARD SWITCHES (MANUAL OPERATING)
2 - N15	6611	COMBINATION SWITCH
2 - C16	6612	CLUSTER SWITCH
2 - D16	6615	POWER WINDOW SWITCHES
2 - E16	6620	DOOR SWITCH
2 - F16	6630	RELAYS & CPU (BODY)
2 - G16	6635	HORNS
2 - H16	6640	AUTO CRUISE CONTROL SYSTEM
2 - I16	6680	AUDIO SYSTEMS (RADIO & TAPE DECK)

5830A-1 FRONT DOOR MECHANISMS (COUPE)

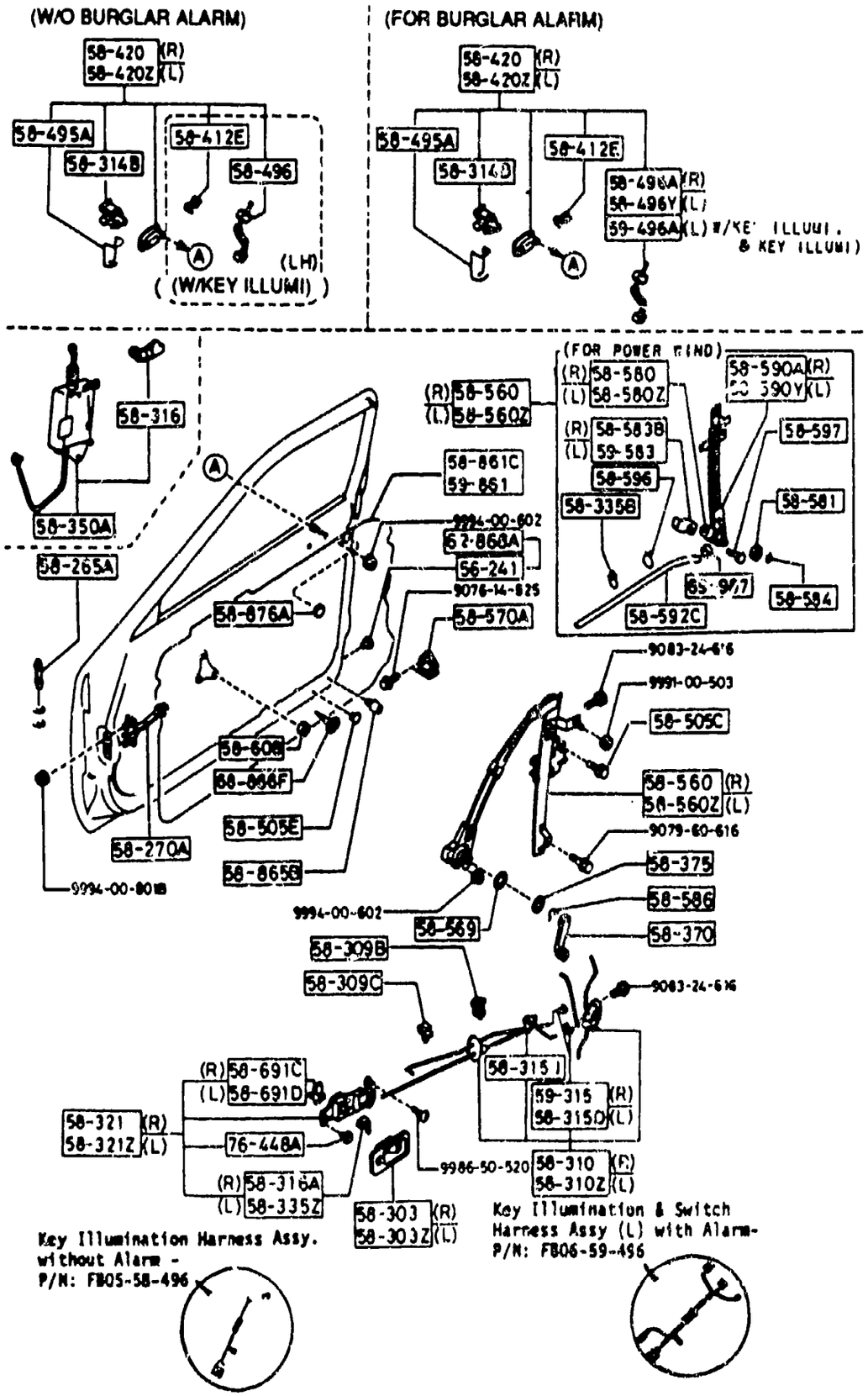

ITEM NO.	D-CODE	DESCRIPTION	PART NO	QTY	MODEL/DESCRIPTION	REMARKS
	56 241	PLUG, DRAIN	0118-56-241	2		
	58 265A	PIN, CHECKER	H260-58-265C			
	58 270A	CHECKER, DOOR	FB01-58-270B	2		
	58 303	COVER (R), INNER HANDLE	FB01-58-303B	1		
		DARK GRAY	07			
		RED	10			
		BLUE	48			
	58 303Z	COVER (L), INNER HANDLE	FB01-59-303B	1		
		DARK GRAY	07			
		RED	10			
		BLUE	48			
	58 309B	HOLDER (UPR), ROD-INNER HANDLE	FB02-58-309	2		
	58 309C	HOLDER (LWR), ROD-INNER HANDLE	FB01-58-309A	2		
	58 310	LOCK (R), DOOR	FB05-58-310A	1		
	58 310Z	LOCK (L), DOOR	FB05-59-310A	1		
	58 314B	JOINT	H043-72-411	2		
	58 315D	CLIP (R)	G030-58-315	4	W/O COMPACT DISC	
				5	W/ COMPACT DISC	
	58 315J	CLIP	H001-58-315	2		
	58 316	CLIP	B093-58-351	1		7701-
	58 316A	CLIP	B001-59-335	1		
	58 321	HANDLE (R), INNER	FB01-58-330B	1	W/O BURGLAR ALARM	
		DARK GRAY	07			
		RED	10			
		BLUE	48			
			FB02-58-330A	1	W/ BURGLAR ALARM	
		DARK GRAY	07			
		RED	10			
		BLUE	48			
	58 321Z	HANDLE (L), INNER	FB01-59-330B	1	W/O BURGLAR ALARM	
		DARK GRAY	07			
		RED	10			
		BLUE	48			
			FB02-59-330A	1	W/ BURGLAR ALARM	
		DARK GRAY	07			
		RED	10			
		BLUE	48			
	58 335Z	CLIP (L), INNER HANDLE	FB01-58-335	1		
	58 350A	ACTUATOR (R), POWER LOCK	FB06-58-350A	1		
7701	FC33*	-550169				

5830A-2 FRONT DOOR MECHANISMS (COUPE)

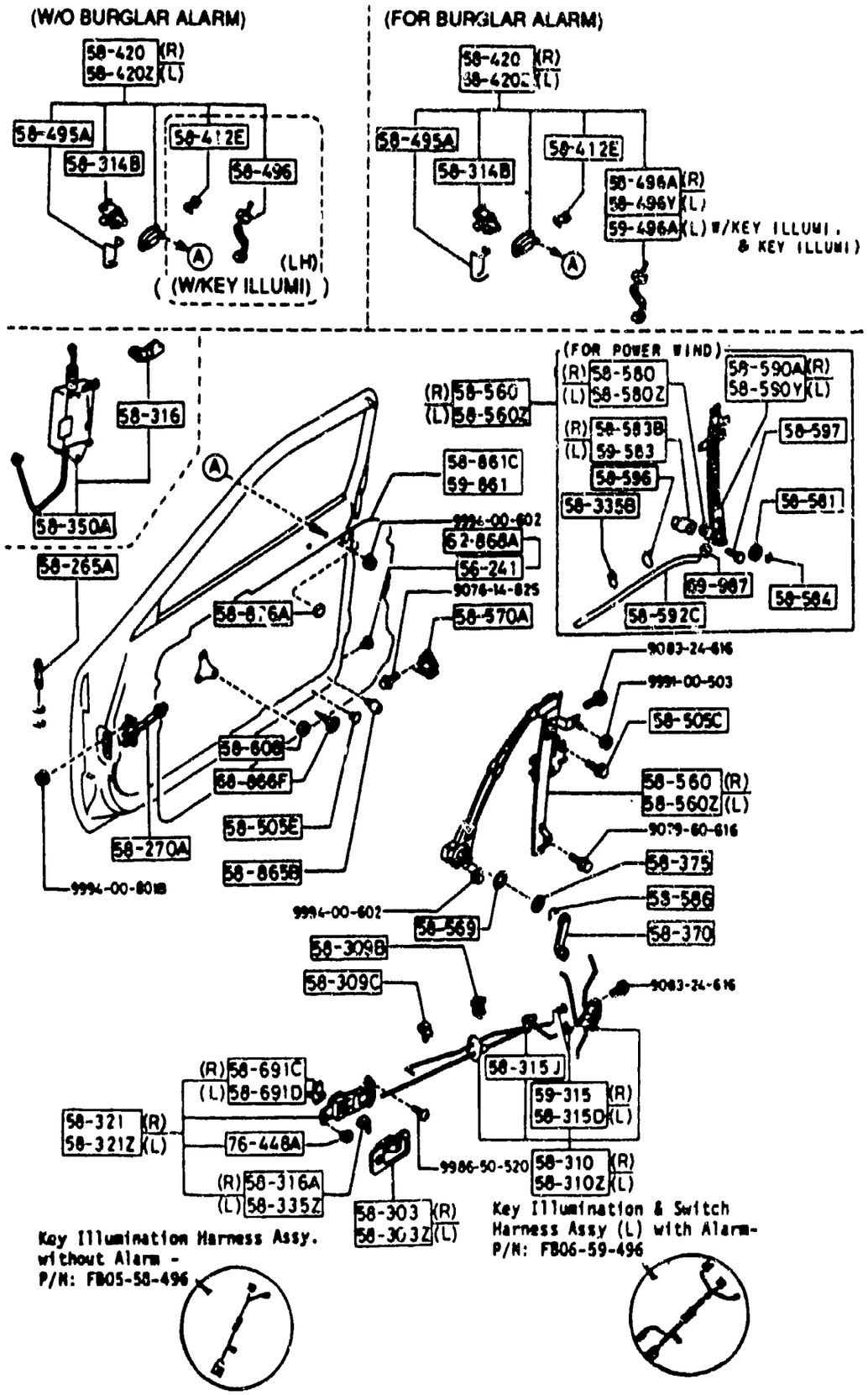

ITEM NO.	D-CODE	DESCRIPTION	PART NO.	QTY	MODEL/DESCRIPTION	REMARKS
	58 370	HANDLE, REGULATOR	B092-58-580	2	W/O POWER WINDOW W/O ALUM. CAP	
		DARK GRAY	07			
		DARK GRAY	09			
		RED	10			
		BLUE	48			
	58 375	ESCUTCHEON	B001-58-582A	2	W/O POWER WINDOW	
		DARK GRAY	07			
		RED	10			
		BLUE	48			
	58 412E	CLIP, HARNESS-OUTER HANDLE	FB01-58-412	2		6623-
	58 420	HANDLE (R), OUTER	FB01-58-410B	1	W/O BURGLAR ALARM	
		ARCTIC SILVER METALLIC	J5			
		TORNADO SILVER METALLIC	K8			
		PURE RED	NP			
		BRILLIANT BLACK	PZ			
		SUNRISE RED	RH			
		DOVER WHITE	WU			
		NOBLE WHITE	WY			
		SATIN GOLD METALLIC	1A			
		CLARET METALLIC	2H			
		ROYAL MALLON	3A			
		SAPPHIRE BLUE METALLIC	5A			
			FB02-58-410B	1	W/ BURGLAR ALARM	
		ARCTIC SILVER METALLIC	J5			
		TORNADO SILVER METALLIC	K8			
		PURE RED	NP			
		BRILLIANT BLACK	PZ			
		SUNRISE RED	RH			
		DOVER WHITE	WU			
		NOBLE WHITE	WY			
		SATIN GOLD METALLIC	1A			
		CLARET METALLIC	2H			
		ROYAL MALLON	3A			
		SAPPHIRE BLUE METALLIC	5A			
	58 420Z	HANDLE (L), OUTER	FB01-59-410B	1	W O BURGLAR ALARM W/O KEY ILLUM.	
		ARCTIC SILVER METALLIC	J5			
		TORNADO SILVER METALLIC	K8			
		PURE RED	NP			
		BRILLIANT BLACK	PZ			
		SUNRISE RED	RH			

6623 FC33* -157179

5830A-3 FRONT DOOR MECHANISMS (COUPE)

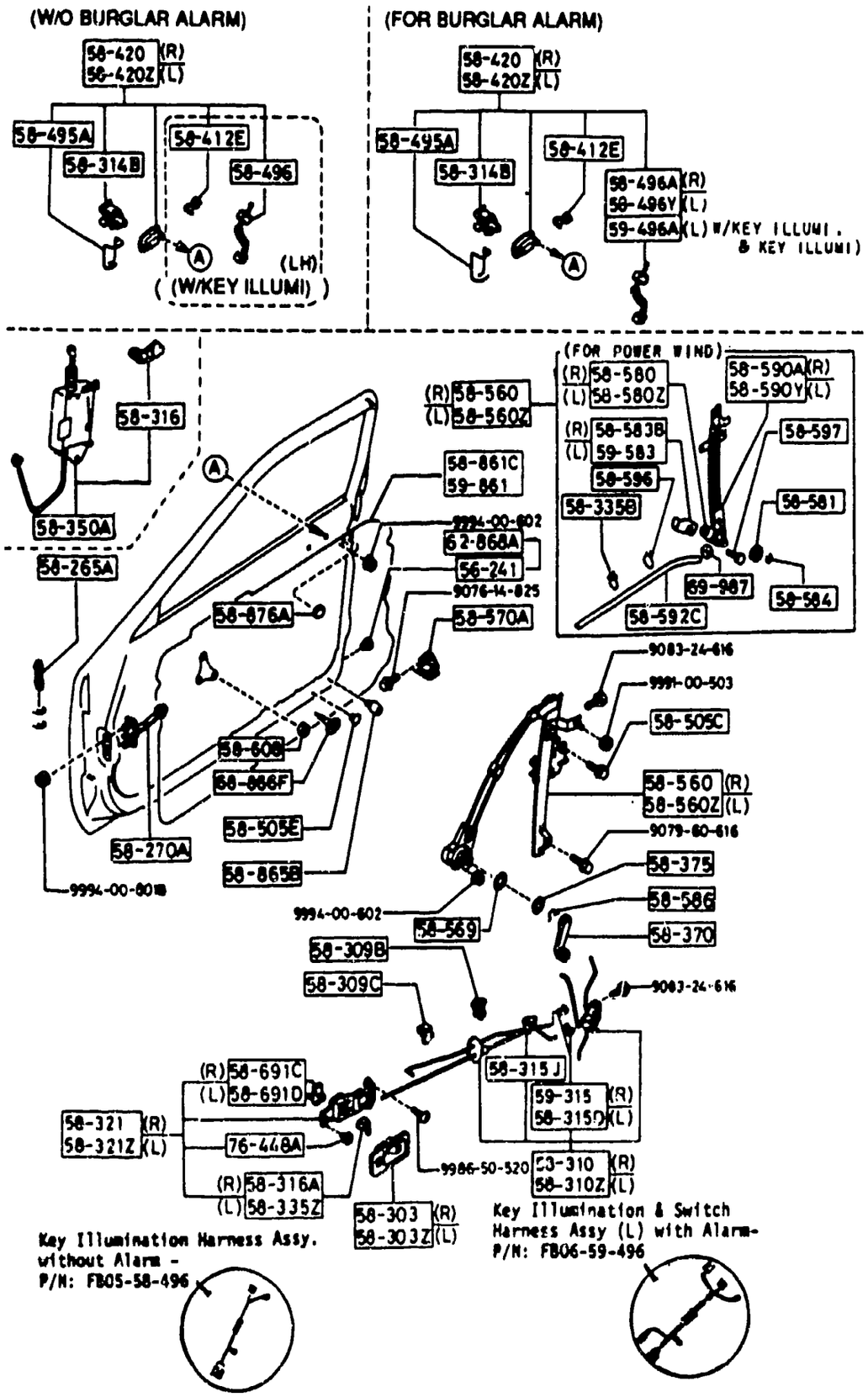

ITEM NO.	D-CODE	DESCRIPTION	PART NO.	QTY	MODEL/DESCRIPTION	REMARKS
	58 420Z (CONT'D)	DOVER WHITE	WU			
		NOBLE WHITE	WY			
		SATIN GOLD METALLIC	1A			
		CLARET METALLIC	2H			
		ROYAL MALLON	3A			
		SAPPHIRE BLUE METALLIC	5A			
			FB02-59-410B	1	W/ BURGLAR ALARM W/O KEY ILLUM.	
		ARCTIC SILVER METALLIC	J5			
		TORNADO SILVER METALLIC	K8			
		PURE RED	NP			
		BRILLIANT BLACK	PZ			
		SUNRISE RED	RH			
		DOVER WHITE	WU			
		NOBLE WHITE	WY			
		SATIN GOLD METALLIC	1A			
		CLARET METALLIC	2H			
		ROYAL MALLON	3A			
		SAPPHIRE BLUE METALLIC	5A			
			FB05-59-410C	1	W/O BURGLAR ALARM W/ KEY ILLUM.	
		ARCTIC SILVER METALLIC	J5			
		TORNADO SILVER METALLIC	K8			
		PURE RED	NP			
		BRILLIANT BLACK	PZ			
			RH			
		DOVER WHITE	WU			
		NOBLE WHITE	WY			
		SATIN GOLD METALLIC	1A			
		ROYAL MALLON	3A			
		SAPPHIRE BLUE METALLIC	5A			
			FB06-59-410C	1	W/ BURGLAR ALARM W/ KEY ILLUM.	
		ARCTIC SILVER METALLIC	J5			
		TORNADO SILVER METALLIC	K8			
		PURE RED	NP			
		BRILLIANT BLACK	PZ			
		SUNRISE RED	RH			
		DOVER WHITE	WU			
		NOBLE WHITE	WY			
		SATIN GOLD METALLIC	1A			
		ROYAL MALLON	3A			

5830A-4 FRONT DOOR MECHANISMS (COUPE)

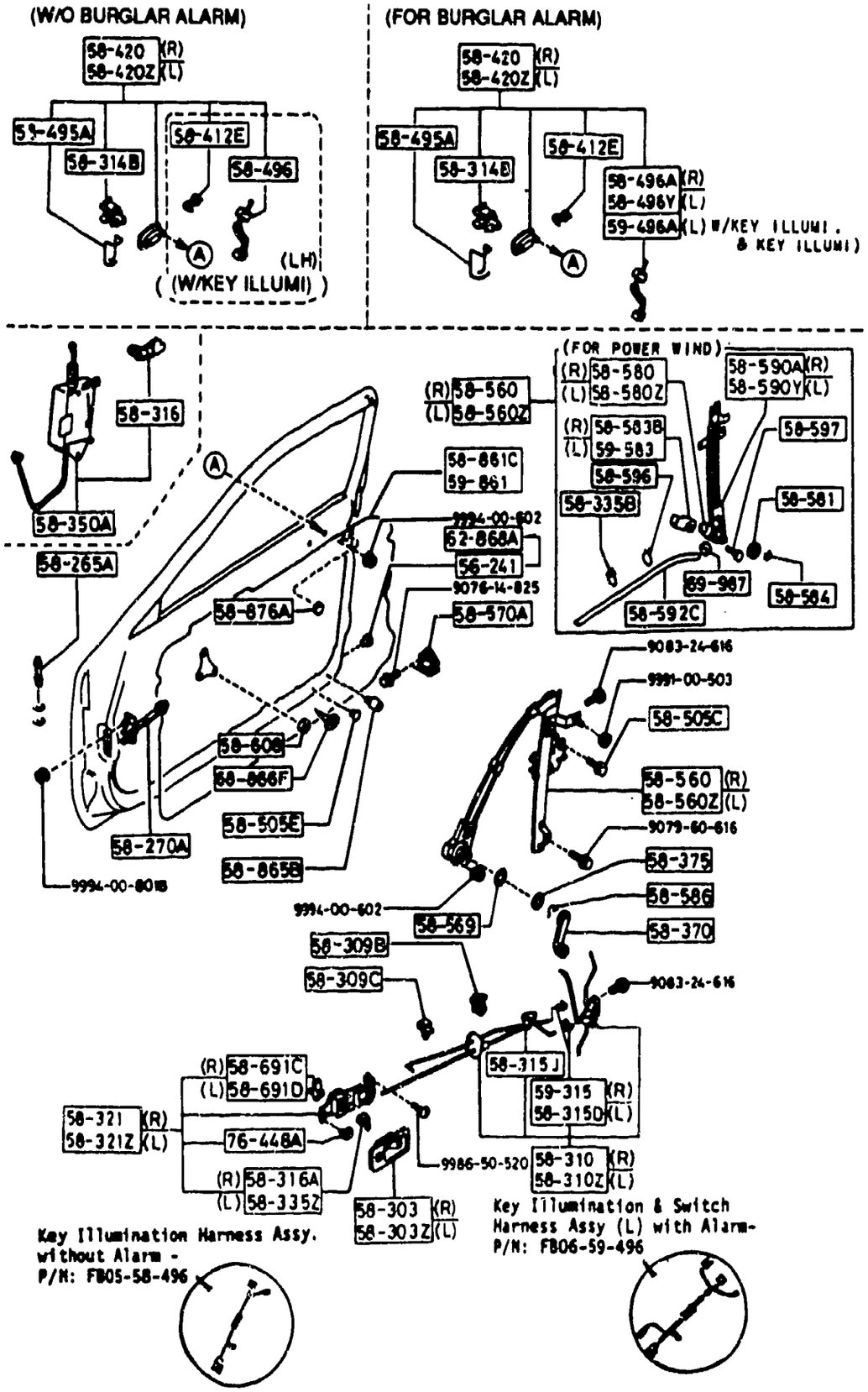

ITEM NO.	D-CODE	DESCRIPTION	PART NO.	QTY	MODEL/DESCRIPTION	REMARKS
	58 420Z (CONT'D)	SAPPHIRE BLUE METALLIC	5A			
	58 495A	RETAINER, LOCK CYLINDER	FB01-58-495	2		
	58 496	HARNESS, KEY ILLUMINATION	FB05-58-496	1	W/O BURGLAR ALARM W/ KEY ILLUM.	
	58 496A	SWITCH (R), LOCK-CYLINDER	FB03-58-496	1	W/ BURGLAR ALARM	
	58 496Y	SWITCH (L), LOCK-CYLINDER	FB03-59-496	1	W/ BURGLAR ALARM	
	58 505C	SCREW, WINDOW REGULATOR	B092-58-505	4		
	58 505E	CAP	B092-58-355	2		
	58 560	REGULATOR (R), WINDOW	FB01-58-560E	1	W/O POWER WINDOW	
			FB05-58-560J	1	W/ POWER WINDOW	
	58 560Z	REGULATOR (L), WINDOW	FB01-59-560E	1	W/O POWER WINDOW	
			FB05-59-560J	1	W/ POWER WINDOW	
	58 570A	STRIKER	B001-58-361	2		
	58 580	MOTOR (R), WINDOW	FB05-58-58X	1	W/ POWER WINDOW	
	58 580Z	MOTOR (L), WINDOW	FB05-59-58X	1	W/ POWER WINDOW	
	58 581	SPROCKET, REGULATOR GUIDE	FB05-58-581	2	W/ POWER WINDOW	
	58 583B	HOLDER (R), MOTOR-REGULATOR	FB05-58-583A	1	W/ POWER WINDOW	
	58 584	RING 'C', SPROCKET-REGULATOR	B094-58-584	2	W/ POWER WINDOW	
	58 586	RING, SNAP	B001-58-585	2	W/O POWER WINDOW	
	58 590A	GUIDE (R), REGULATOR-POWER WINDOW	FB05-58-590B	1	W/ POWER WINDOW	
	58 590Y	GUIDE (L), REGULATOR-POWER WINDOW	FB05-59-590B	1	W/ POWER WINDOW	
	58 592C	TUBE, REGULATOR GUIDE	FB05-58-592	2	W/ POWER WINDOW	
	58 596	CLIP, TUBE-REGULATOR GUIDE	FB05-58-596	4	W/ POWER WINDOW	
	58 597	BOLT, COVER-REGULATOR GUIDE	FB05-58-597	6	W/ POWER WINDOW	
	58 608	PAD	B092-58-863A	2	W/O POWER WINDOW	
	58 691C	KNOB (R), DOOR LOCK	FB01-58-316B	1	W/O BURGLAR ALARM	
		DARK GRAY	07			
		RED	10			
		BLUE	48			
			FB02-58-316A	1	W/ BURGLAR ALARM	
		DARK GRAY	07			
		RED	10			
		BLUE	48			
	58 691D	KNOB (L), DOOR LOCK	FB01-59-316B	1	W/O BURGLAR ALARM	
		DARK GRAY	07			
		RED	10			
		BLUE	48			
			FB02-59-316A	1	W/ BURGLAR ALARM	
		DARK GRAY	07			
		RED	10			

5830A-5 FRONT DOOR MECHANISMS (COUPE)

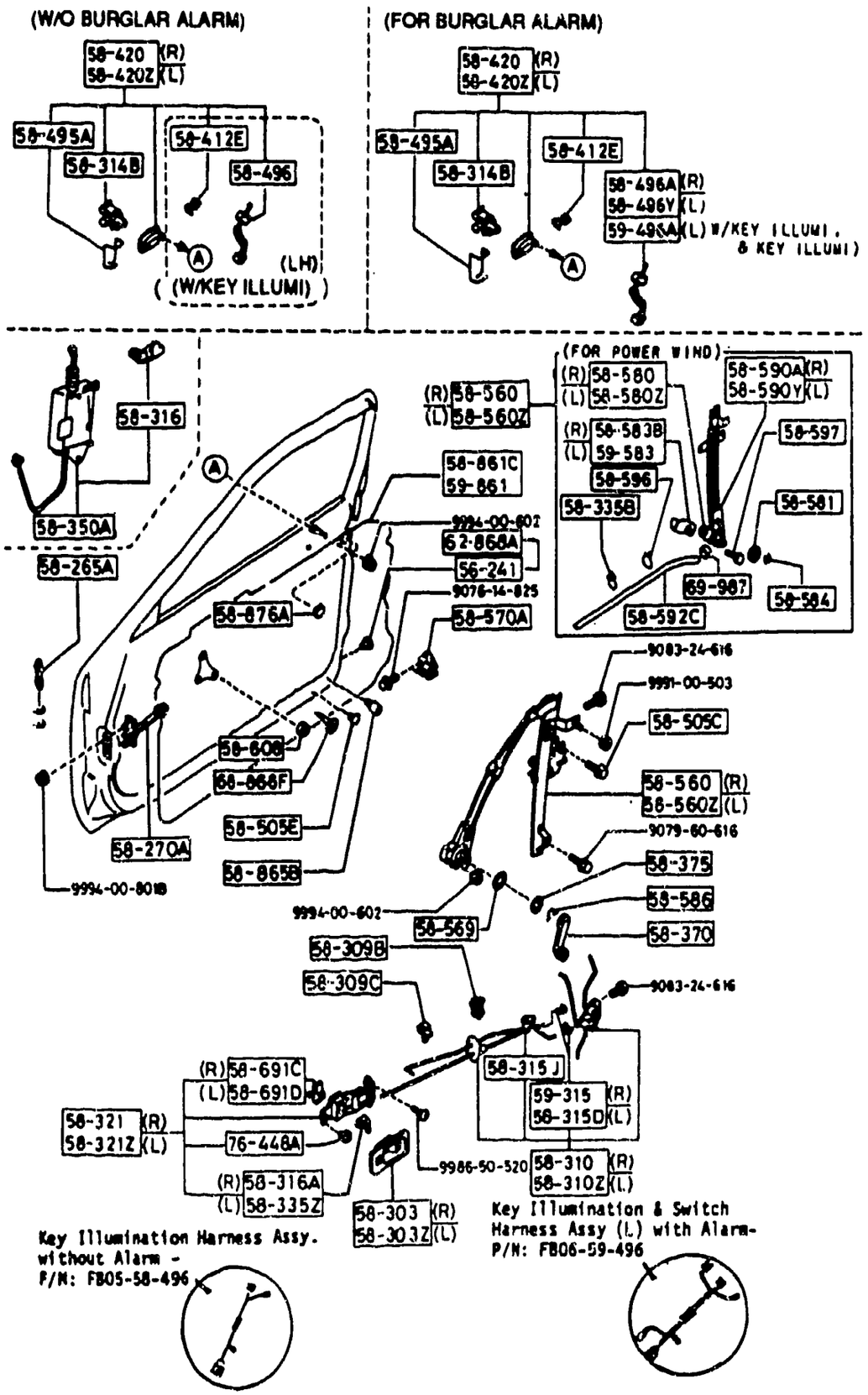

ITEM NO.	D-CODE	DESCRIPTION	PART NO.	QTY	MODEL/DESCRIPTION	REMARKS
	58 691D (CONT'D)	BLUE	48			
	58 763	CLIP	B094-58-595	4	W/ POWER WINDOW	
	58 865B	CUSHION, RUBBER	G067-58-873	2		
	58 876A	COVER, DOOR BODY	FB01-58-876	2		
	59 315	CLIP	G030-59-315	4	W/O COMPACT DISC	
				5	W/ COMPACT DISC	
	59 496A	HARNESS (L), ILLUM. & SWITCH	FB06-59-496	1	W/ BURGLAR ALARM W/ KEY ILLUM.	
	59 583	HOLDER (L), MOTOR-REGULATOR	FB05-59-583A	1	W/ POWER WINDOW	
	68 866F	FASTENER, SEAL	G031-68-866B	2	W/O BURGLAR ALARM	
	69 987	BAND	B094-58-513	2	W/ POWER WINDOW	
	76 448A	CLIP	G030-76-448	2		

5830AA-1 FRONT DOOR MECHANISMS (CONVERTIBLE)

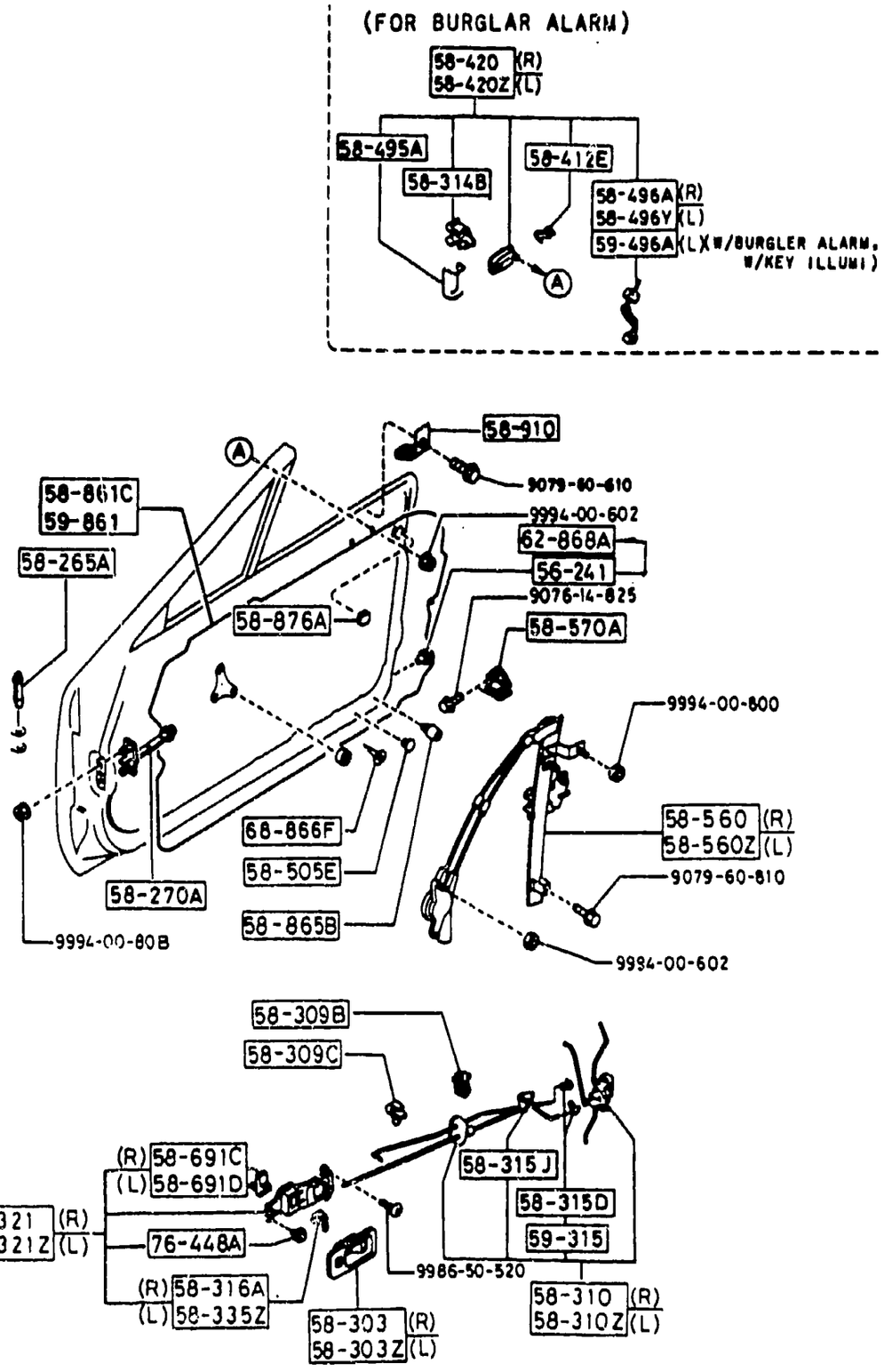

ITEM NO.	D-CODE	DESCRIPTION	PART NO.	QTY	MODEL/DESCRIPTION	REMARKS
	56 241	PLUG, DRAIN	0118-56-241	2		
	58 265A	PIN, CHECKER	H260-58-265C	2		
	58 270A	CHECKER, DOOR	FB01-58-270B	2		
	58 303	COVER (R), IN. HANDLE	FB01-58-303B	1		
		DARK GRAY	07			
		RED	10			
		BLUE	48			
	58 303Z	COVER (L), INNER HANDLE	FB01-59-303B	1		
		DARK GRAY	07			
		RED	10			
		BLUE	48			
	58 309B	HOLDER (UP.), ROD-INNER HANDLE	FB02-58-309	2		
	58 309C	HOLDER (LWR.), ROD-INNER HANDLE	FB01-58-309A	2		
	58 310	LOCK (R), DOOR	FB05-58-310A	1		
	58 310Z	LOCK (L), DOOR	FB05-59-310A	1		
	58 314B	JOINT	H043-72-411	2		
	58 315D	CLIP (R)	G030-58-315	4		
	58 315J	CLIP	H001-58-315	2		
	58 316A	CLIP	B001-59-335	1		
	58 321	HANDLE (R), INNER	FB02-58-330A	1	W/ BURGLAR ALARM	
		DARK GRAY	07			
		RED	10			
		BLUE	48			
	58 321Z	HANDLE (L), INNER	FB02-59-330A	1	W/ BURGLAR ALARM	
		DARK GRAY	07			
		RED	10			
		BLUE	48			
	58 335Z	CLIP (L), INNER HANDLE	FB01-58-335	1		
	58 412E	CLIP, HARNESS-OUTER HANDLE	FB01-58-412	2		
	58 420	HANDLE (R), OUTER	FB02-58-410B	1	W/ BURGLAR ALARM	
		ARCTIC SILVER METALLIC	J5			
		TORNADO SILVER METALLIC	K8			
		BRILLIANT BLACK	PZ			
		SUNRISE RED	RH			
		NOBLE WHITE	WY			
		SATIN GOLD METALLIC	1A			
		CLARET METALLIC	2H			
		SAPPHIRE BLUE METALLIC	5A			
	58 420Z	HANDLE (L), OUTER	FB06-59-410C	1	W/ BURGLAR ALARM	
		ARCTIC SILVER METALLIC	J5			

5830AA-2 FRONT DOOR MECHANISMS (CONVERTIBLE)

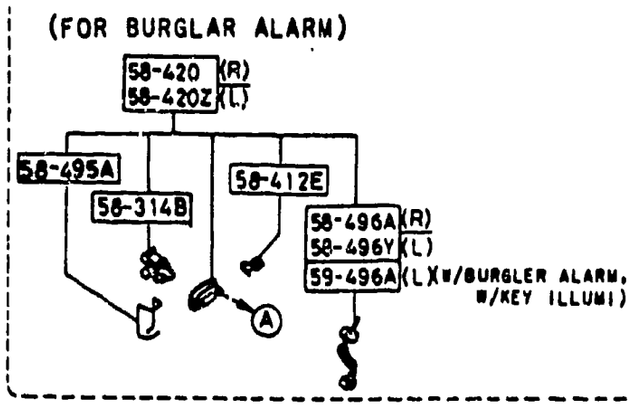

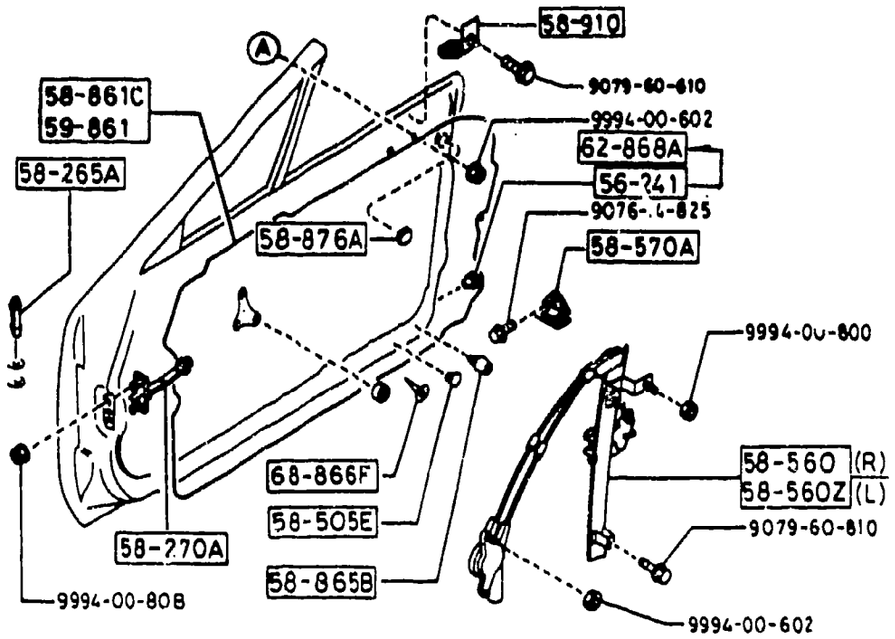

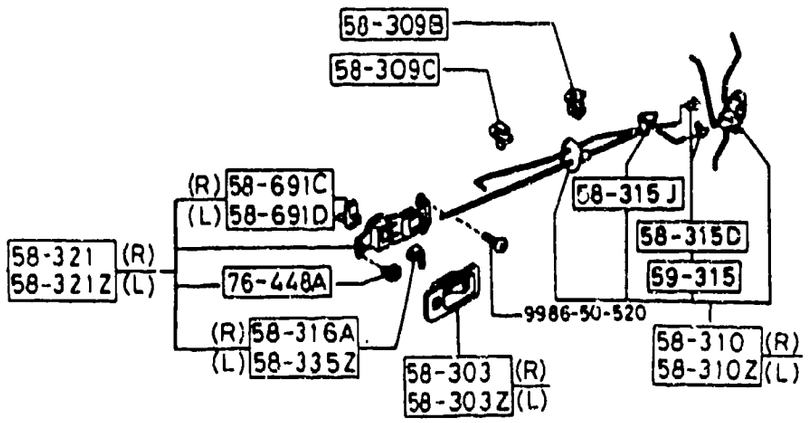

ITEM NO.	D-CODE	DESCRIPTION	PART NO	QTY	MODEL/DESCRIPTION	REMARKS
	58 420Z (CONT'D)	TORNADO SILVER METALLIC	K8			
		BRILLIANT BLACK	PZ			
		SUNRISE RED	RH			
		NOBLE WHITE	WY			
		SATIN GOLD METALLIC	1A			
		CLARET METALLIC	2H			
		SAPPHIRE BLUE METALLIC	5A			
	58 495A	RETAINER, LOCK CYLINDER	FB01-58-495	2		
	58 496	HARNESS, KEY ILLUMINATION	FB05-58-496	1		
	58 496A	SWITCH (R), LOCK-CYLINDER	FB03-58-496	1	W/ BURGLAR ALARM	
	58 496Y	SWITCH (L), LOCK-CYLINDER	FB03-59-496	1	W/ BURGLAR ALARM	
	58 505E	CAP	B092-58-355	2		
	58 560	REGULATOR (R), WINDOW	FB67-58-560B	1		
	58 560Z	REGULATOR (L), WINDOW	FB67-59-560B	1		
	58 570A	STRIKER	B001-58-361A	2		
	58 691C	KNOB (R), DOOR LOCK	FB02-58-316A	1	W/ BURGLAR ALARM	
		DARK GRAY	07			
		RED	10			
		BLUE	48			
	58 691D	KNOB (L), DOOR LOCK	FB02-59-316A	1	W/ BURGLAR ALARM	
		DARK GRAY	07			
		RED	10			
		BLUE	48			
	58 865B	CUSHION, RUBBER	G067-58-873	2		
	58 876A	COVER, DOOR BODY	FB01-58-876	2		
	58 910	STOPPER, GLASS	H272-58-911	2		
	59 315	CLIP	G030-59-315	4		
	59 496A	HARNESS (L), ILLUM. & SWITCH	FB06-59-496	1	W/ BURGLAR ALARM	
	68 866F	FASTENER, SEAL	G031-68-866B	1		
	76 448A	CLIP	G030-76-448	2		

SECTION INDEX -- BODY

STARTING LOCATION	SECT NO	SECTION NAME
2 - C 3	0900A	KEY SETS
2 - E 3	5000	FRONT BUMPER
2 - F 3	5005	RADIATOR GRILLE
2 - G 3	5010A	REAR BUMPER
2 - H 3	5030A	WINDOW MOULDINGS
2 - I 3	5040A	BODY MOULDINGS
2 - J 3	5060A	SIDE PROTECTORS
2 - K 3	5100	HEAD LAMPS
2 - L 3	5103	HEAD LAMP RETRACTORS
2 - M 3	5105	FRONT COMBINATION LAMPS
2 - C 4	5110A	REAR COMBINATION LAMPS
2 - E 4	5120	LICENSE LAMPS
2 - F 4	5125	INTERIOR LAMPS
2 - G 4	5130	OVERHEAD CONSOLE (COUPE)
2 - H 4	5170	ORNAMENTS
2 - I 4	5180	COWL & EXTRACTOR GILLES
2 - K 4	5230	HOOD
2 - L 4	5260	TRUNK LID (CONVERTIBLE)
2 - M 4	5310	BODY PANELS (FRONT) (COUPE)
2 - N 4	5310A	BODY PANELS (FRONT) (CONVERTIBLE)
2 - C 5	5320	BODY PANELS (FENDER & WHEEL APRON) (COUPE)
2 - D 5	5320B	BODY PANELS (FENDER & WHEEL APRON) (CONVERTIBLE)
2 - E 5	5330	BODY PANELS (DASH & COWL PANEL)
2 - F 5	5340A	BODY PANELS (SIDE) (COUPE)
2 - H 5	5340AA	BODY PANELS (SIDE) (CONVERTIBLE)
2 - K 5	5360A	BODY PANELS (ROOF) (COUPE)
2 - L 5	5370	BODY PANELS (FLOOR) (COUPE)
2 - M 5	5370A	BODY PANELS (FLOOR) (CONVERTIBLE)
2 - C 6	5390	FLOOR ATTACHMENTS (COUPE)
2 - E 6	5390A	FLOOR ATTACHMENTS (CONVERTIBLE)
2 - G 6	5500	DASHBOARD EQUIPMENTS (COUPE) (W O ANTI-LOCK BRAKE SYSTEM)
2 - I 6	5500A	DASHBOARD EQUIPMENTS (COUPE) (ANTI-LOCK BRAKE SYSTEM)
2 - J 6	5500B	DASHBOARD EQUIPMENTS (CONVERTIBLE)
2 - K	5520	METER HOOD
2 - L 6	5530	SPEEDOMETER CABLE
2 - M 6	5540	METER COMPONENTS (COUPE) (W O ANTI-LOCK BRAKE SYSTEM)
2 - C 7	5540A	METER COMPONENTS (COUPE) (ANTI LOCK BRAKE SYSTEM)
2 - E 7	5540B	METER COMPONENTS (CONVERTIBLE)
2 - F 7	5560	DASHBOARD & RELATED PARTS
2 - I 7	5570	CONSOLE
2 - K 7	5580	VENTILATOR
2 - C 8	5700A	FRONT SEATS (COUPE)
2 - C 9	5700AA	FRONT SEATS (COUPE) (LEATHER)
2 - C10	5700AB	FRONT SEATS (CONVERTIBLE) (CLOTH)
2 - F10	5700AC	FRONT SEATS (CONVERTIBLE) (LEATHER)
2 - J10	5750A	REAR SEATS (CLOTH)
2 - C11	5750AA	REAR SEATS (LEATHER)
2 - H11	5790A	SEAT BELTS
2 - J11	5800A	FRONT DOORS (COUPE)
2 - K11	5800AA	FRONT DOORS (CONVERTIBLE)
2 - C12	5830A	FRONT DOOR MECHANISMS (COUPE)
2 - H12	5830AA	FRONT DOOR MECHANISMS (CONVERTIBLE)
2 - C13	5840A	FRONT DOOR TRIMS & RELATED PARTS (COUPE)
2 - K13	5840AB	FRONT DOOR TRIMS & RELATED PARTS (CONVERTIBLE
2 - N13	6100	HEATER
2 - C14	6110	HEATER UNIT COMPONENTS
2 - D14	6115	HEATER CONTROLS COMPONENTS
2 - E14	6120	HEATER BLOWER COMPONENTS
2 - F14	6130	AIR CONDITIONER (W O AIR CONDITIONER)
2 - G14	6132A	CONDENSER PACKAGE
2 - I14	6142A	COMPRESSOR MOUNTING KIT COMPRESSOR CLUTCH ASSEMBLY & REPAIR PARTS
2 - J14	6152A	EVAPORATOR PACKAGE
2 - K14	6200	LIFT GATE
2 - L14	6230	LIFT GATE MECHANISMS (COUPE)
2 - N14	6300A	WINDOW GLASSES
2 - C15	6330	SUNROOF (COUPE)
2 - E15	6330A	SOFT TOP (CONVERTIBLE)
2 - G15	6600B	SWITCHES & RELAYS (ENGINE) (W O TURBO)
2 - J15	6600BA	SWITCHES & RELAYS (ENGINE) (TURBO)
2 - M15	6610	DASHBOARD SWITCHES (MANUAL OPERATING)
2 - N15	6611	COMBINATION SWITCH
2 - C16	6612	CLUSTER SWITCH
2 - D16	6615	POWER WINDOW SWITCHES
2 - E16	6620	DOOR SWITCH
2 - F16	6630	RELAYS & CPU (BODY)
2 - G16	6635	HORNS
2 - H16	6640	AUTO CRUISE CONTROL SYSTEM
2 - I16	6680	AUDIO SYSTEMS (RADIO & TAPE DECK)

5840A-1 FRONT DOOR TRIMS & RELATED PARTS (COUPE)

(W/O C.D.SPEAKER)

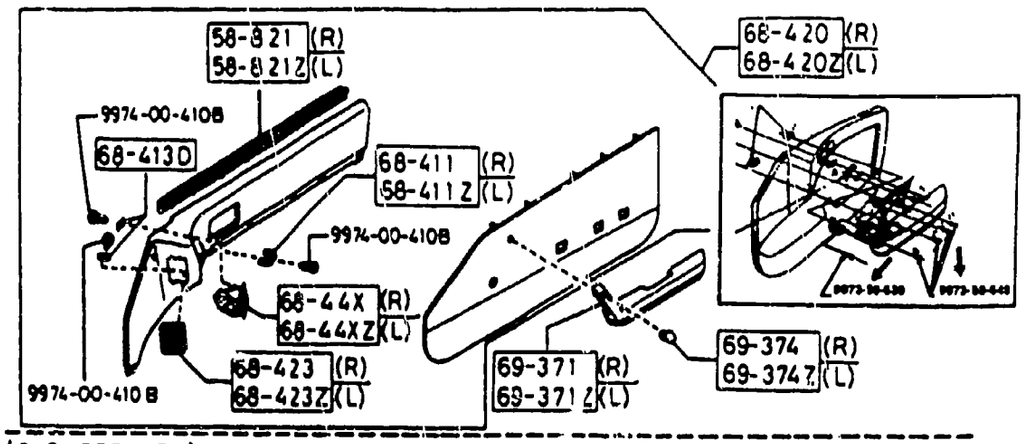

(W/C.D.SPEAKER)

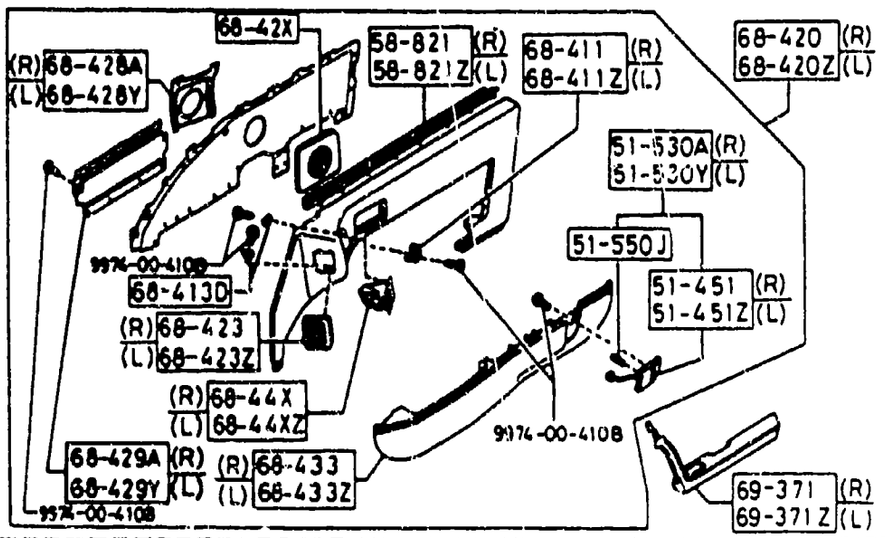

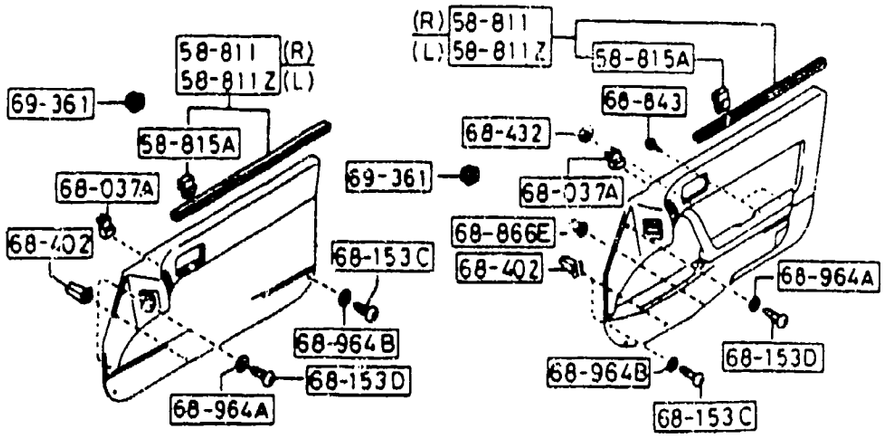

ITEM NO.	D-CODE	DESCRIPTION	PART NO.	QTY	MODEL/DESCRIPTION	REMARKS
	51 451	LENS (R), COURTESY LAMP	FB05-51-531	1	GXL, TURBO W/ COURTESY LAMP	
	51 451Z	LENS (L), COURTESY LAMP	FB05-51-591	1	GXL, TURBO W/ COURTESY LAMP	
	51 530A	LAMP (R), COURTESY-DOOR TRIM	FB05-51-530	1	GXL, TURBO W/ COURTESY LAMP	
	51 530Y	LAMP (R), COURTESY-DOOR TRIM	FB05-51-590	1	GXL, TURBO W/ COURTESY LAMP	
	51 550J	BULB	0000-11-0194	2	12V, 3.8W GXL, TURBO W/ COURTESY LAMP	
	58 811	WEATHERSTRIP (R), OUTER	FB01-58-810	1		
	58 811Z	WEATHERSTRIP (L), OUTER	FB01-59-810	1		
	58 815A	CLIP, WEATHERSTRIP, OUTER	FB01 58-815	12		
	58 821	WEATHERSTRIP (R), INNER	FB01-58-821	1		
	58 821Z	WEATHERSTRIP (L), INNER	FB01-59-821	1		
	68 037A	GROMMET, SCREW	FB01-68-403	2		
	68 153C	SCREW, TAPPING	FB01-68-425	6		8215-
		BLACK	02			
		GRAY	04			
		RED	11			
		BLUE	48			
	68 153D	SCREW, TAPPING	FA56-68-025B	2		-7401
			09			
			11			
			48			
	68 402	GROMMET, SCR.	FA54-68-402	8		
	68 411	BRACKET NO. 1 (R), GRILLE-TRIM	FB01-68-411	1	W/O POWER WINDOW	
			FB01-68-414	1	W/ POWER WINDOW	
	68 411Z	BRACKET NO. 1 (L), GRILLE-TRIM	FB01-68-412	1	W/O POWER WINDOW	
			FB01-68-415	1	W/ POWER WINDOW	
	68 413D	WASHER	FB01-68-413	10		
	68 420	TRIM (R), DOOR	FB05-68-420B	1	GXL, CLOTH W/ PWR. WIND. & CD	-7701
		DARK GRAY	07			
		RED	10			
		BLUE	50			
			FB09-68-420	1	GXL, CLOTH W/ PWR. WIND & CD	7701-
		DARK GRAY	09			
		RED	10			
		BLUE	50			

7401 FC33* -543109
7701 FC33* -550149
8215 FC33* -621379

5840A-2 FRONT DOOR TRIMS & RELATED PARTS (COUPE)

(W/O C.D.SPEAKER)

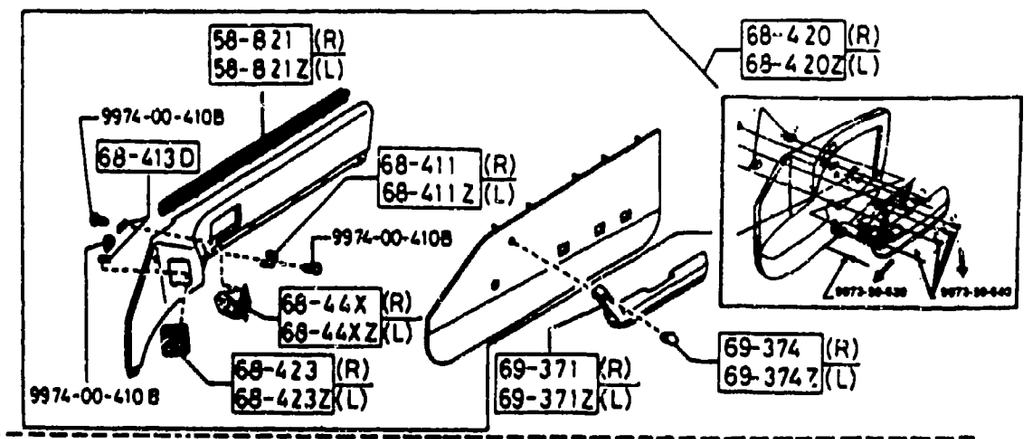

(W/C.D.SPEAKER)

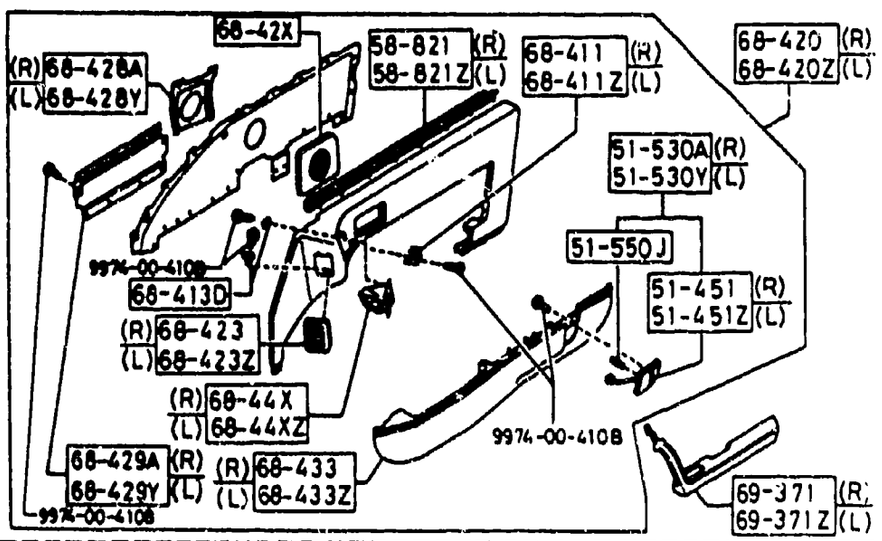

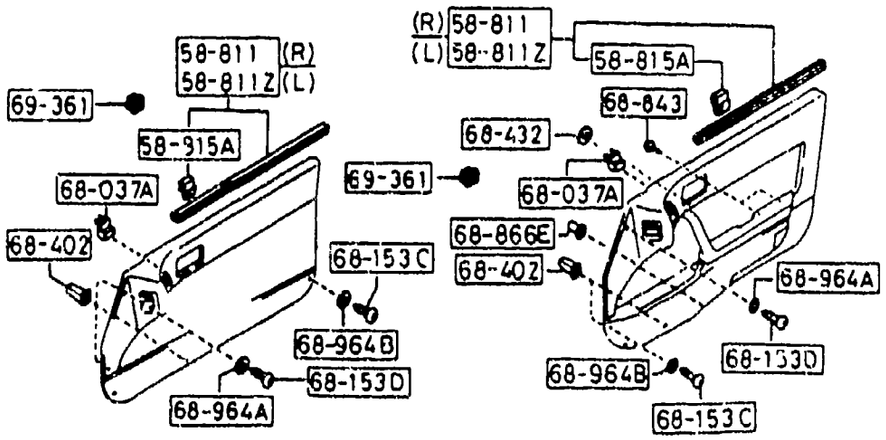

ITEM NO.	D-CODE	DESCRIPTION	PART NO.	QTY	MODEL/DESCRIPTION	REMARKS
	68 420 (CONT'D)		FB03-68-420A	1	GXL, CLOTH W/ PWR. WIND., W/O CD	-7701
		DARK GRAY	07			
		RED	10			
		BLUE	48			
			FB07-68-420	1	GXL, CLOTH W/ PWR. WIND., W/O CD	7701-
		DARK GRAY	07			
		RED	10			
		BLUE	48			
			FB04-68-420A	1	GXL, LEATHER W/ PWR. WIND., W/O CD	-7701
		DARK GRAY	07			
		RED	10			
		BLUE	48			
			FB08-68-420	1	GXL, TURBO, LEATHER W/ PWR. WIND., W/O CD	7701-
		DARK GRAY	07			
		RED	13			
		BLUE	48			
			FB45-68-420A	1	TURBO, CLOTH W/ PWR. WIND., W/O CD	-7701
		DARK GRAY	07			
		RED	10			
		BLUE	49			
			FB60-68-420	1	TURBO, CLOTH W/ PWR. WIND., W/O CD	7701-
		DARK GRAY	07			
		RED	10			
		BLUE	49			
			FB46-68-420B	1	TURBO, CLOTH W/ PWR. WIND. & CD	-7701
		DARK GRAY	09			
		RED	10			
		BLUE	48			
			FB61-68 420	1	TURBO, CLOTH W/ PWR. WIND. & CD	7701-
		DARK GRAY	09			

7701 FC33* -550169

5840A-3 FRONT DOOR TRIMS & RELATED PARTS (COUPE)

(W/O C.D.SPEAKER)

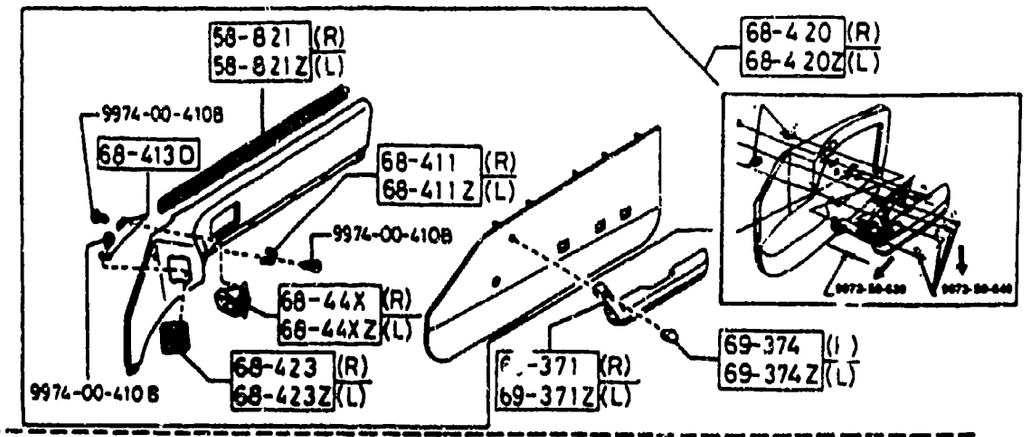

(W/C.D.SPEAKER)

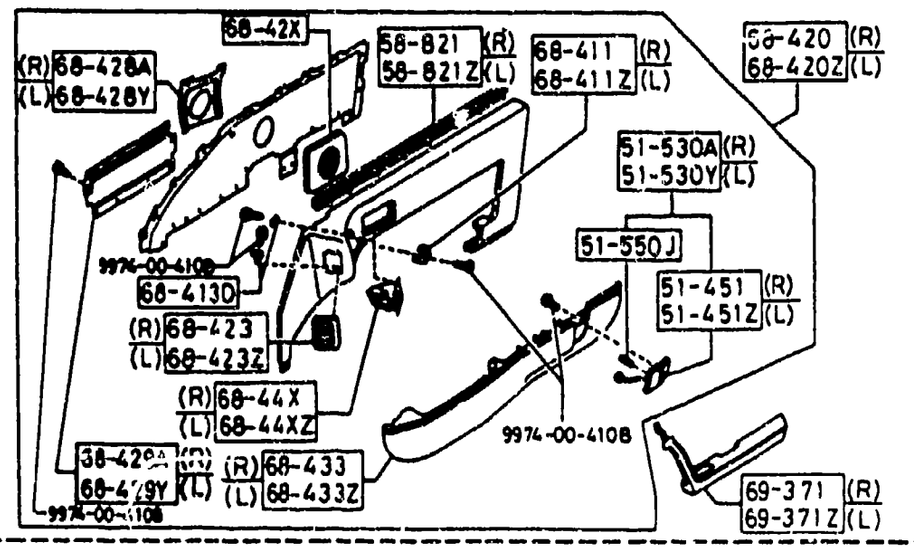

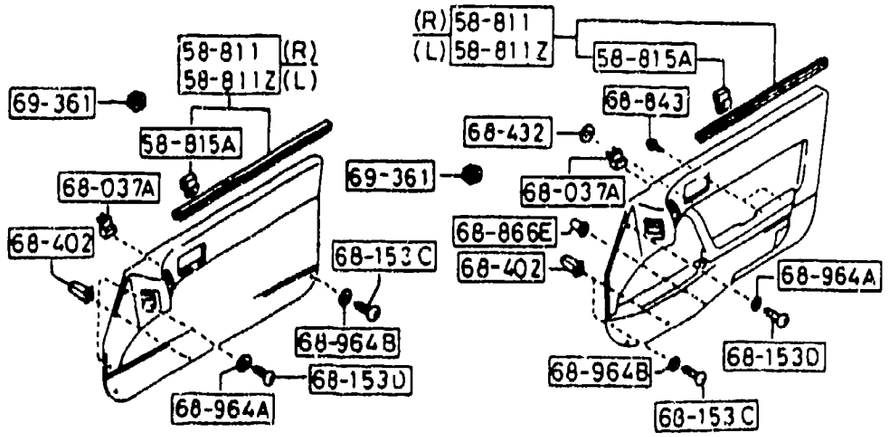

ITEM NO.	D-CODE	DESCRIPTION	PART NO.	QTY	MODEL/DESCRIPTION	REMARKS
	68 420 (CONT'D)	RED	10			
		BLUE	50			
			FB02-68-420A	1	BASE, SE, CLOTH W/O PWR. WIND. & CD	-7701
		DARK GRAY	07			
		RED	10			
		BLUE	48			
			FB41-68-420	1	BASE, SE, CLOTH W/O PWR. WIND. & CD	7701-
		DARK GRAY	07			
		RED	10			
		BLUE	48			
			FB06-68-420B	1	GXL, LEATHER W/ PWR. WIND. & CD	-7701
		DARK GRAY	07			
		RED	13			
		BLUE	50			
			FB10-68-420	1	GXL, TURBO, LEATHER W/ PWR. WIND. & CD	7701-
		DARK GRAY	09			
		RED	13			
		BLUE	50			
			FB44-68-420A	1	SPORT, GTU, CLOTH W/ PWR. WIND. & CD	
		DARK GRAY	07			
		RED	10			
		BLUE	49			
			FB79-68-420	1	10TH ANNIV. ED., LEATHER W/ PWR. WIND., W/O CD	8215-
		BLACK	02			
	68 420Z	TRIM (L), DOOR	FB05-68-450B	1	GXL, CLOTH W/ PWR. WIND. & CD	-7701
		DARK GRAY	07			
		RED	10			
		BLUE	50			
			FB09-68-450	1	GXL, CLOTH W/ PWR. WIND. & CD	7701-
		DARK GRAY	09			
		RED	10			
		BLUE	50			

7701 FC33* -530169
8215 FC33* -621379

5840A-4 FRONT DOOR TRIMS & RELATED PARTS (COUPE)

(W/O C.D.SPEAKER)

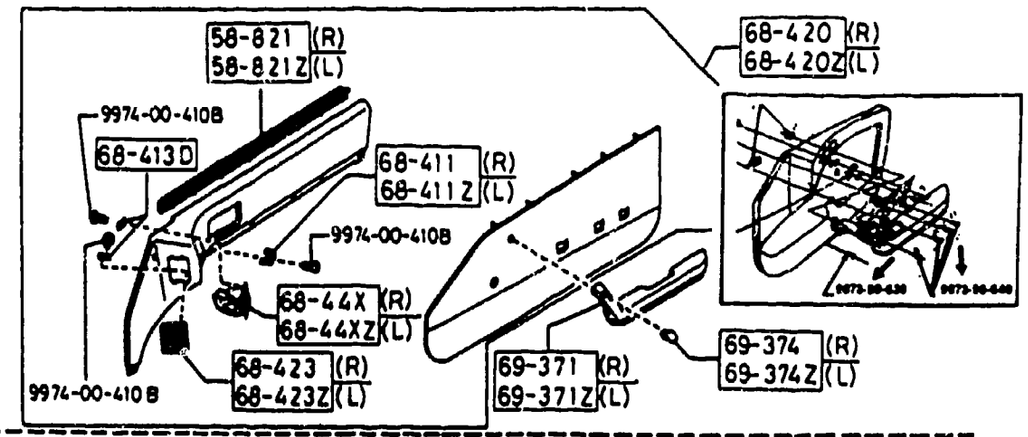

(W/C.D.SPEAKER)

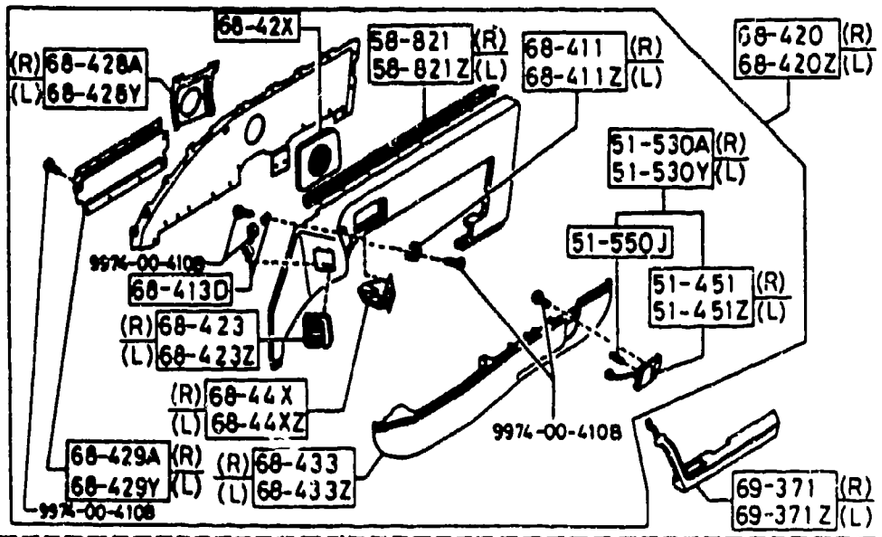

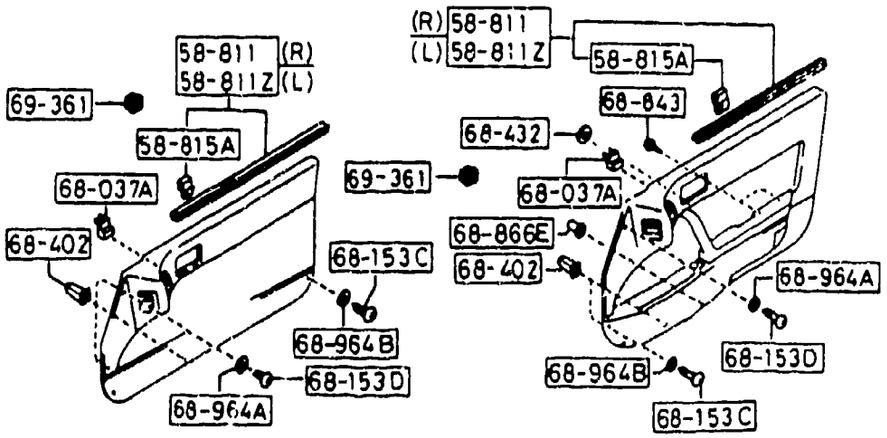

ITEM NO.	D-CODE	DESCRIPTION	PART NO.	QTY	MODEL/DESCRIPTION	REMARKS
	68 420Z (CONT'D)		FB03-68-450A	1	GXL, CLOTH W/ PWR. WIND., W/O CD	-7701
		DARK GRAY	07			
		RED	10			
		BLUE	48			
			FB07-67-450	1	GXL, CLOTH W/ PWR. WIND., W/O CD	7701-
		DARK GRAY	07			
		RED	10			
		BLUE	48			
			FB04-68-45**	1	GXL, LEATHER W/ PWR. WIND., W/O CD	-7701
		DARK GRAY	07			
		RED	13			
		BLUE	48			
			FB08-68-450	1	GXL, TURBO, LEATHER W/ PWR. WIND., W/O CD	7701-
		DARK GRAY	07			
		RED	13			
		BLUE	48			
			FB45-68-450A	1	TURBO, CLOTH W/ PWR. WIND., W/O CD	-7701
		DARK GRAY	07			
		RED	10			
		BLUE	49			
			FB60-68-450	1	TURBO, CLOTH W/ PWR. WIND., W/O CD	7701-
		DARK GRAY	07			
		RED	10			
		BLUE	49			
			FB46-68-450B	1	TURBO, CLOTH W/ PWR. WIND. & CD	-7701
		DARK GRAY	07			
		RED	10			
		BLUE	48			
			FB61-68-450	1	TURBO, CLOTH W/ PWR. WIND. & CD	7701-
		DARK GRAY	09			

7701 FC33* -550169

5840A-5 FRONT DOOR TRIMS & RELATED PARTS (COUPE)

(W/O C.D.SPEAKER)

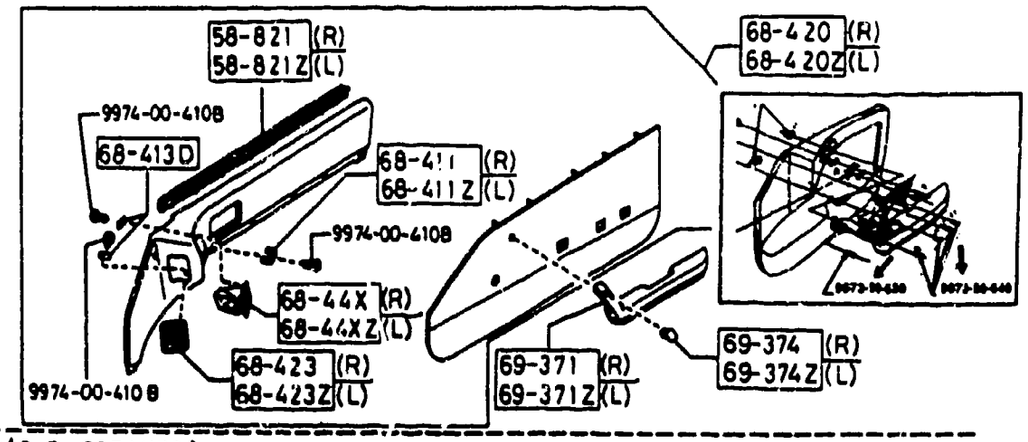

(W/C.D.SPEAKER)

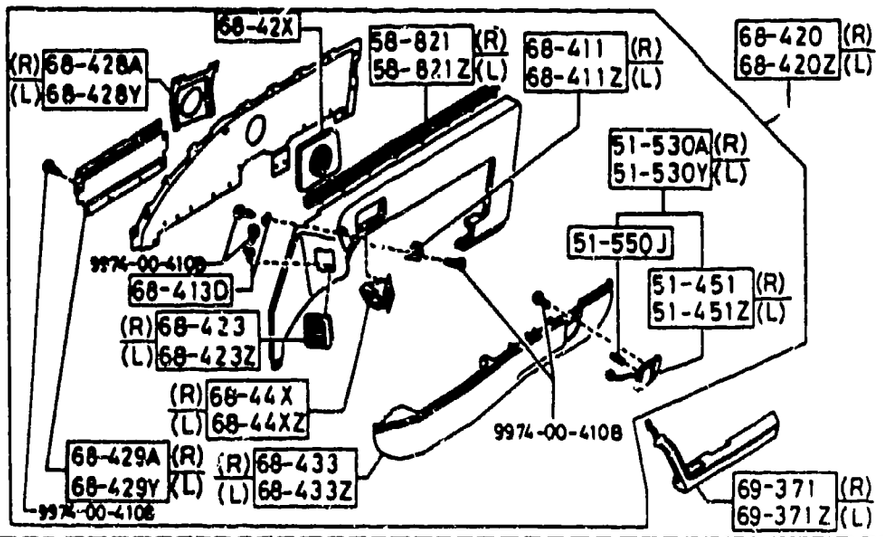

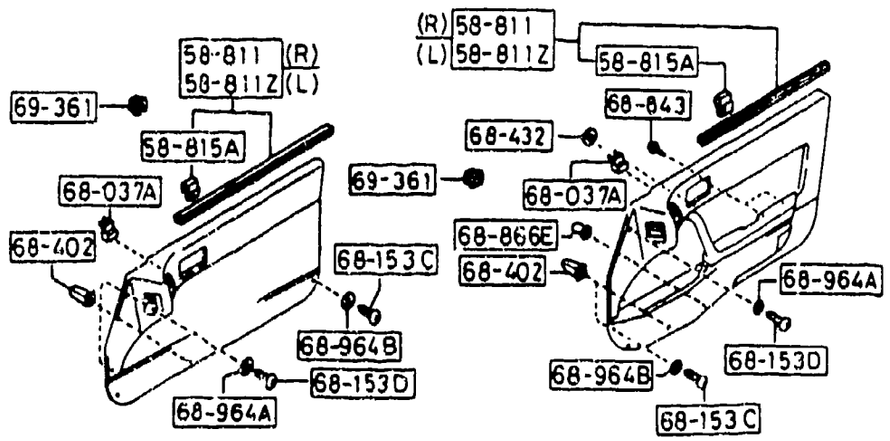

ITEM NO.	D-CODE	DESCRIPTION	PART NO.	QTY	MODEL/DESCRIPTION	REMARKS
	68 420Z (CONT'D)	RED	10			
		BLUE	50			
			FB02-68-450A	1	BASE, SE, CLOTH W/O PWR. WIND. & CD	-7701
		DARK GRAY	07			
		RED	10			
		BLUE	48			
			FB41-68-450	1	BASE, SE, CLOTH W/O PWR. WIND. & CD	7701-
		DARK GRAY	07			
		RED	10			
		BLUE	48			
			FB06-68-450B	1	GXL, LEATHER W/ PWR. WIND. & CD	-7701
		DARK GRAY	09			
		RED	13			
		BLUE	48			
			FB10-68-450	1	GXL, TURBO, LEATHER W/ PWR. WIND. & CD	7701-
		DARK GRAY	09			
		RED	13			
		BLUE	50			
			FB44-68-450A	1	SPORT, GTU, CLOTH W/O PWR. WIND & CD	
		DARK GRAY	07			
		RED	10			
		BLUE	49			
			FB79-68-450	1	10TH ANNIV. ED., LEATHER W/ PWR. WIND., W/O CD	8215-
		BLACK	02			
	68 423	COVER (R), DUST-DOOR TRIM	FB01-68-423	1		
		BLACK	02			8215-
		DARK GRAY	07			
		RED	10			
		BLUE	48			
	68 423Z	COVER (L), DUST-DOOR TRIM	FB01-68-453	1		
		BLACK	02			8215-
		DARK GRAY	07			
		RED	10			
		BLUE	48			

7701 FC33* -550169
8215 FC33* -621379

5840A-6 FRONT DOOR TRIMS & RELATED PARTS (COUPE)

(W/O C.D.SPEAKER)

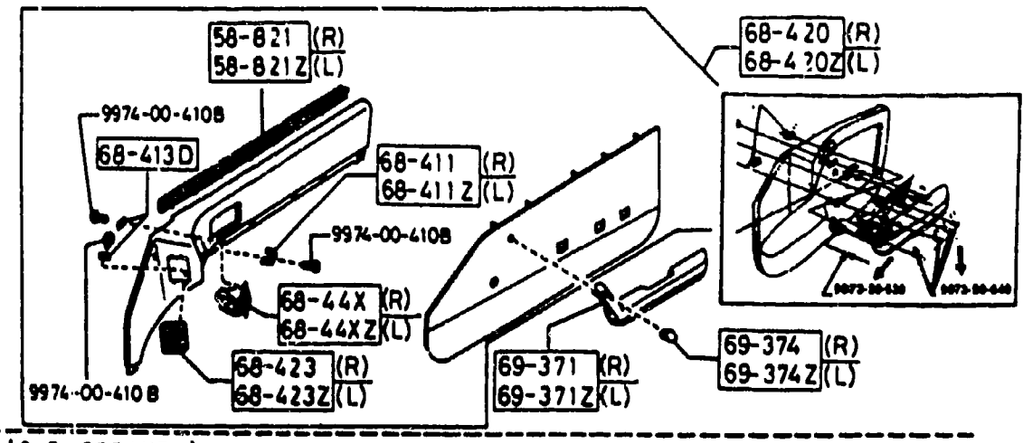

(W/C.D.SPEAKER)

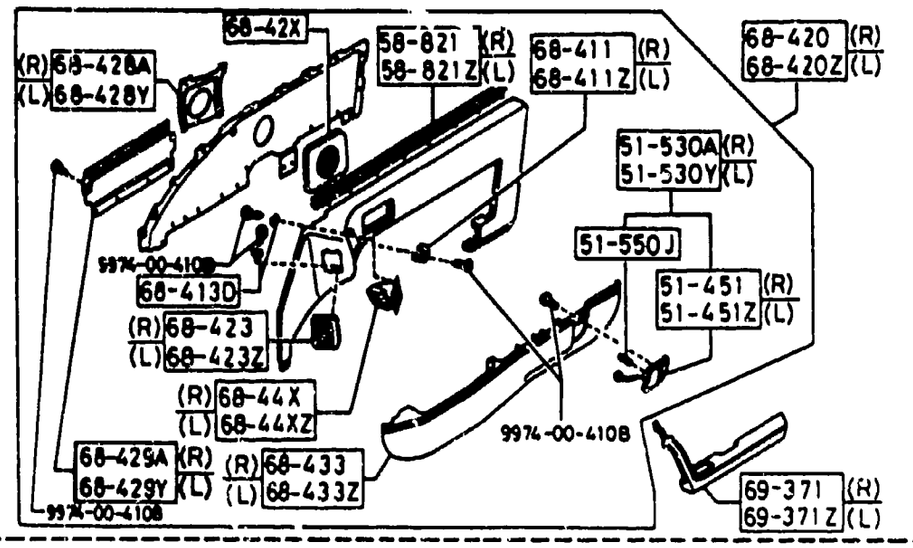

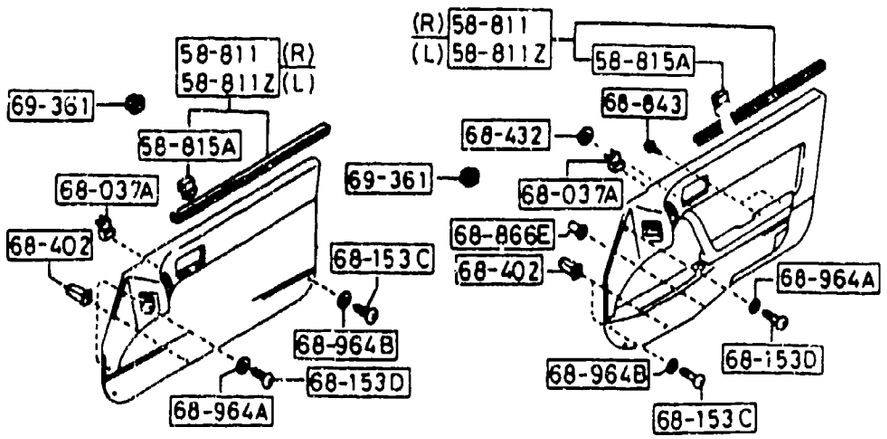

ITEM NO.	D-CODE	DESCRIPTION	PART NO.	QTY	MODEL/DESCRIPTION	REMARKS
	68 428A	BRACKET (R), SPEAKER GRILLE	FB05-68-428	1	GXL, TURBO W/ CD	
	68 428Y	BRACKET (L), SPEAKER GRILLE	FB05-68-458	1	GXL, TURBO W/ CD	
	68 429A	COVER (R), POCKET-DOOR TRIM	FB03-68-429	1	GXL, TURBO	
		BLACK	02			8215-
		DARK GRAY	07			
		RED	10			
		BLUE	48			
	68 429Y	COVER (L), POCKET-DOOR TRIM	FB03-68-459	1	GXL, TURBO	
		BLACK	02			8215-
		DARK GRAY	07			
		RED	10			
		BLUE	48			
	68 42X	GRILLE, SPEAKER-DOOR TRIM	FB05-68-42X	2	W/ CD GRILLE	
		DARK GRAY	07			-6A01
		DARK GRAY	09			6A01-
		RED	10			
		BLUE	48			-6A01
		BLUE	50			6A01-
	68 432	NUT, SPEED	G033-68-432	2		
	68 433	POCKET (R), DOOR TRIM	FB03-68-427	1	GXL, TURBO	7701-
		DARK GRAY	07			
		RED	10			
		BLUE	48			
			FB67-68-427			
		BLACK	02			7701-
		RED	10			
		BLUE	48			
	68 433Z	POCKET (L), DOOR TRIM	FB03-68-457	1	GXL, TURBO	7701-
		DARK GRAY	07			
		RED	10			
		BLUE	48			
			FB67-68-457			
		BLACK	02			7701-
		RED	10			
		BLUE	48			
	68 44X	GRILLE (L), VENT-DOOR TRIM	FB01-68-47X	1		
		BLACK	02			8215-
		DARK GRAY	07			
		RED	10			
		BLUE	48			

6A01 FC33* -517640
7701 FC33* -550169
8215 FC33* -621379

5840A-7 FRONT DOOR TRIMS & RELATED PARTS (COUPE)

(W/O C.D.SPEAKER)

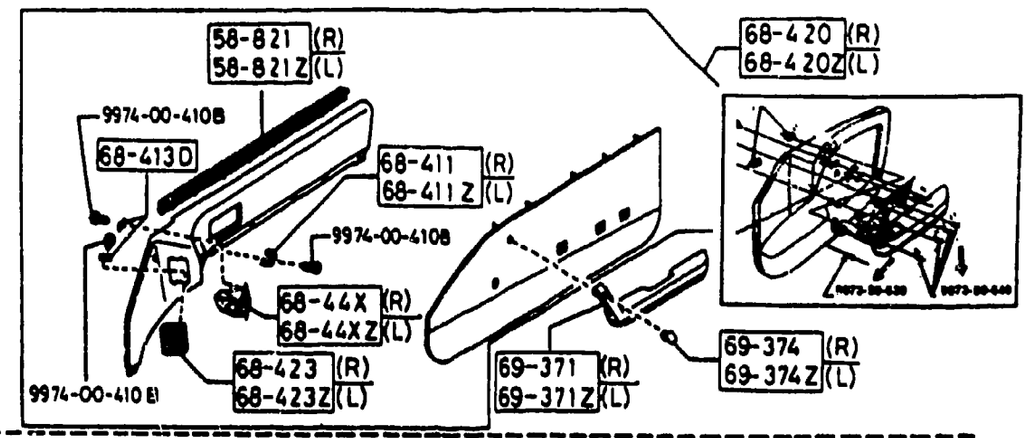

(W/C.D.SPEAKER)

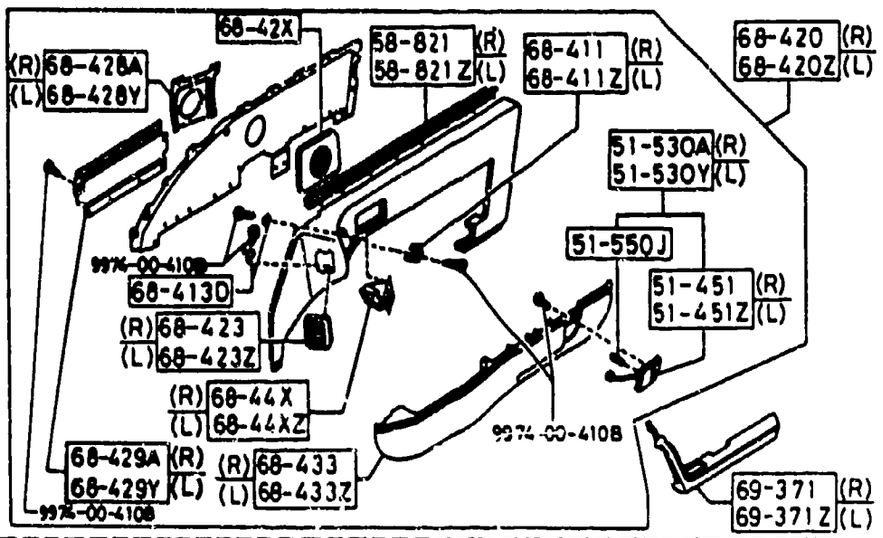

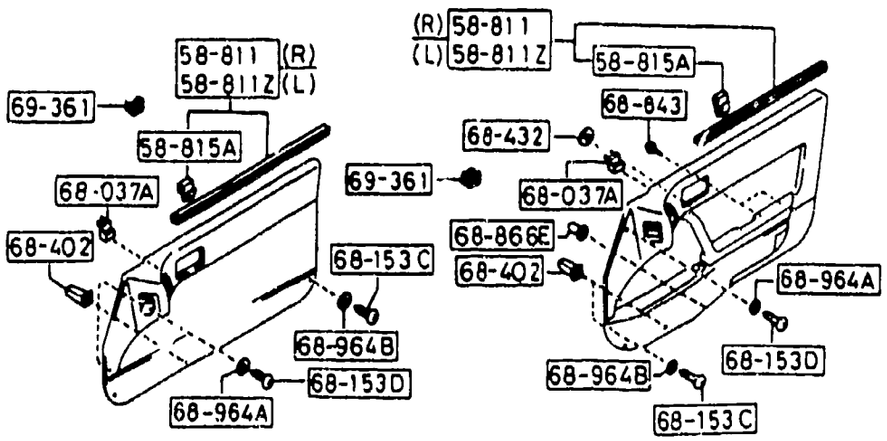

ITEM NO.	D-CODE	DESCRIPTION	PART NO.	QTY	MODEL/DESCRIPTION	REMARKS
	68 843	SCREW, TAPPING	UB39-68-805	4		
	68 866E	FASTENER, SEAL	0187-58-922	2		
	68 964A	WASHER	G030-68-964C	2		
		DARK GRAY	09			
		RED	11			
		BLUE	48			
	68 964B	WASHER	FB01-68-427	6		
		BLACK	02			
		DARK GRAY	04			
		RED	11			
		BLUE	48			
	69 361	GROMMET, SCREW	H001-69-361	12		-8801
			B316-69-361	12		8801-
	69 371	REST (R), ARM	FB01-69-370	1	GXL, TURBO W/ PWR. WIND.	
		BLACK	02			
		DARK GRAY	07			
		RED	10			
		BLUE	48			
			FB02-69-370	1	BASE, SPORT, SE, GTU W/O PWR. WIND.	
		BLACK	02			
		DARK GRAY	07			
		RED	10			
		BLUE	48			
	69 371Z	REST (R), ARM	FB01-69-390	1	GXL, TURBO W/ PWR. WIND.	
		BLACK	02			
		DARK GRAY	07			
		RED	10			
		BLUE	48			
			FB02-69-390	1	BASE, SPORT, SE, GTU W/O PWR. WIND.	
		BLACK	02			
		DARK GRAY	07			
		RED	10			
		BLUE	48			
	69 374	CAP (R), PULL HANDLE	BF70-69-372	1	BASE, SPORT, SE, GTU W/O PWR. WIND	
		BLACK	02			
		DARK GRAY	07			
		RED	10			
		BLUE	48			

8801 FC33* -627778

5840A-8 FRONT DOOR TRIMS & RELATED PARTS (COUPE)

(W/O C.D.SPEAKER)

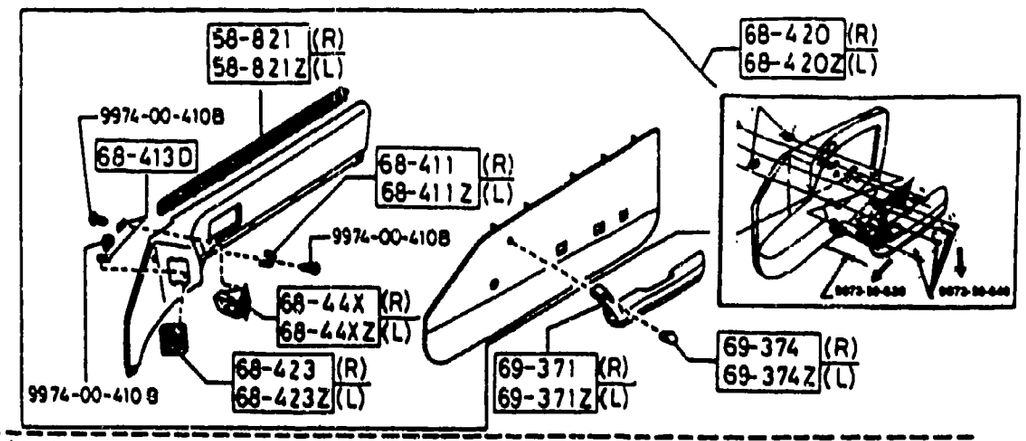

(W/C.D.SPEAKER)

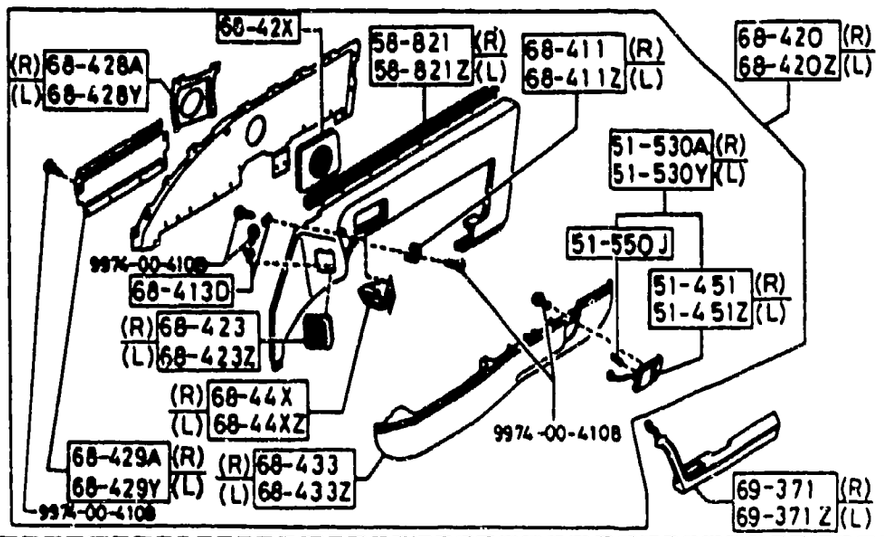

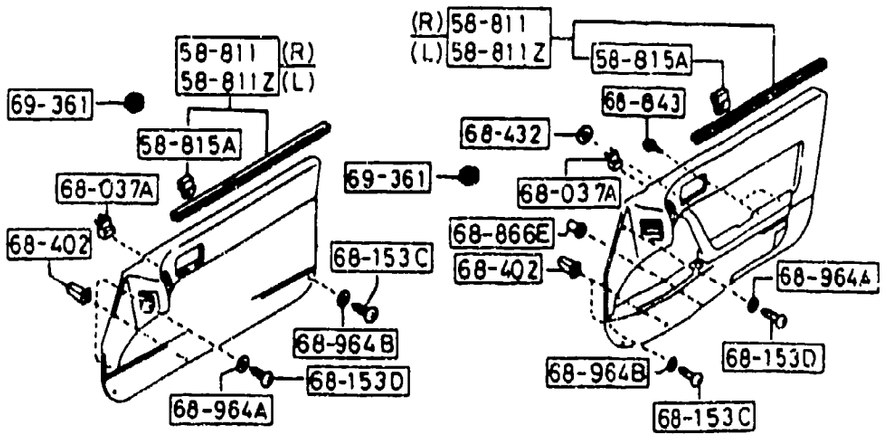

ITEM NO.	D-CODE	DESCRIPTION	PART NO.	QTY	MODEL/DESCRIPTION	REMARKS
	69 374Z	CAP (L), PULL HANDLE	BF70-69-392	1	BASE, SPORT, SE, GTU W/O PWR. WIND.	
		BLACK	02			
		DARK GRAY	07			
		RED	10			
		BLUE	48			

5840AB-1 FRONT DOOR TRIMS & RELATED PARTS (CONVERTIBLE)

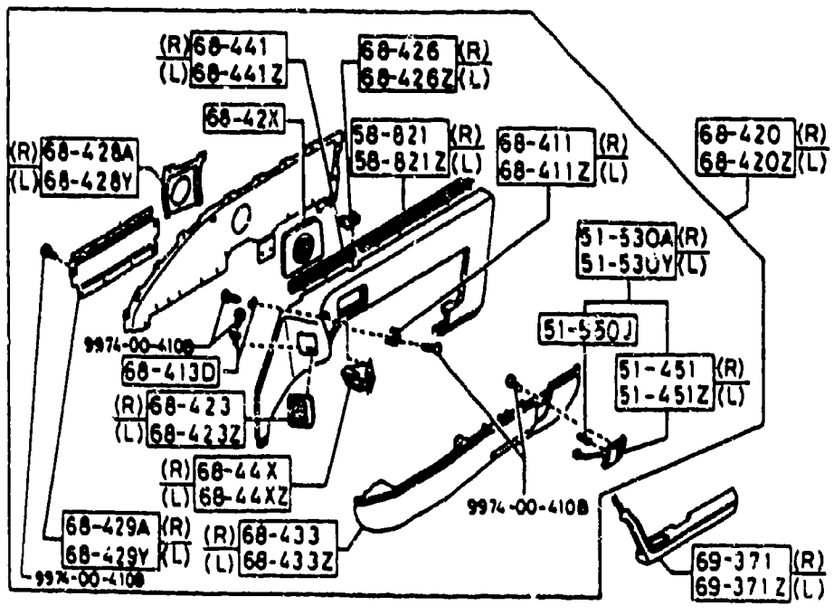

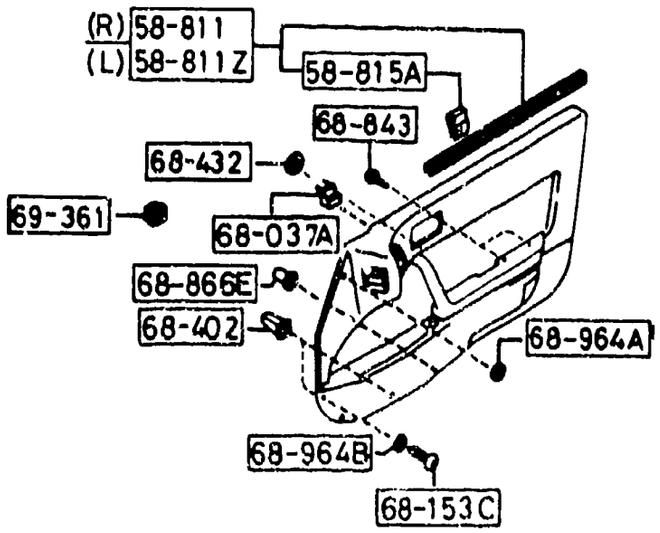

ITEM NO.	D-CODE	DESCRIPTION	PART NO.	QTY	MODEL/DESCRIPTION	REMARKS
	51 451	LENS (R), COURTESY LAMP	FB05-51-531	1		
	51 451Z	LENS (L), COURTESY LAMP	FB05-51-591	1		
	51 530A	LAMP (R), COURTESY-DOOR TRIM	FB05-51-530	1		
	51 530Y	LAMP (L), COURTESY-DOOR TRIM	FB05-51-590	1		
	51 550J	BULB	0000-11-0194	2	12V, 3.8W	
	58 811	WEATHERSTRIP (R), OUTER	FB67-58-810C	1		-7A14
			FB67-58-810D	1		7A14-
	58 811Z	WEATHERSTRIP (L), OUTER	FB67-59-810D	1		
	58 815A	CLIP, WEATHERSTRIP-OUTER	FB01-58-815	12		
	58 821	WEATHERSTRIP (R), INNER	FB67-58-821	1		
	58 821Z	WEATHERSTRIP (L), INNER	FB67-59-821	1		
	68 037A	GROMMET, SCREW	FB01-68-403	2		
	68 153C	SCREW, TAPPING	FB01-68-425	6		
		BLACK	02			
		GRAY	04			
		RED	11			
		BLUE	48			
	68 402	GROMMET, SCREW	FA54-68-402	8		
	68 411	BRACKET NO. 1 (R), GRILLE-TRIM	FB01-6J-414	1		
	68 411Z	BRACKET NO. 1 (L), GRILLE-TRIM	FB01-68-415	1		
	68 413D	WASHER	FB01-68-413	10		
	68 420	TRIM (R), DOOR	FB67-68-420	1	CLOTH W/ PWR. WIND. & CD	
		DARK GRAY	09			
		BLUE	50			
			FB68-68-420	1	LEATHER W/ PWR. WIND. & CD	
		DARK GRAY	09			
		BLUE	50			
	68 420Z	TRIM (L), DOOR	FB67-68-450	1	CLOTH W/ PWR. WIND. & CD	
		DARK GRAY	09			
		BLUE	50			
			FB68-68-450	1	LEATHER W/ PWR. WIND. & CD	
		DARK GRAY	09			
		BLUE	50			
	68 423	COVER (R), DUST-DOOR TRIM	FB01-68-423	1		
		BLACK	02			
		DARK GRAY	07			
		RED	10			
		BLUE	48			
	68 423Z	COVER (L), DUST-DOOR TRIM	FB01-68-453	1		

7A14 FC351 -101140

5840AB-2 FRONT DOOR TRIMS & RELATED PARTS (CONVERTIBLE)

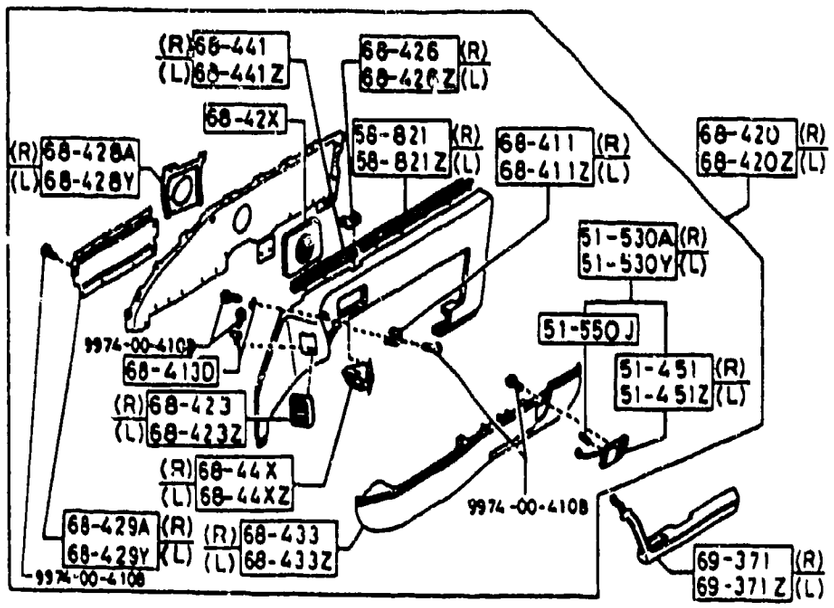

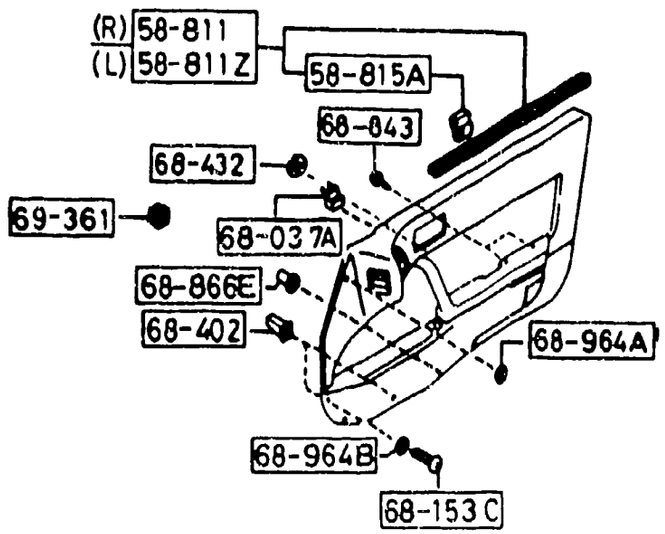

ITEM NO.	D-CODE	DESCRIPTION	PART NO.	QTY	MODEL/DESCRIPTION	REMARKS
	68 423Z (CONT'D)	BLACK	02			
		DARK GRAY	07			
		RED	10			
		BLUE	48			
	68 426	VESSEL (R), CHANNEL	FB67-68-426	1		
	68 426Z	VESSEL (L), CHANNEL	FB67-68-456	1		
	68 428A	BRACKET (R), SPEAKER GRILLE	FB05-68-428	1		
	68 428Y	BRACKET (L), SPEAKER GRILLE	FB05-68-4[illegible]	1		
	68 429A	COVER (R), POCKET-DOOR TRIM	FB03-68-429	1		
		BLACK	02			
		DARK GRAY	07			
		RED	10			
		BLUE	48			
	68 429Y	COVER (L), POCKET-DOOR TRIM	FB03-68-459	1		
		BLACK	02			
		DARK GRAY	07			
		RED	10			
		BLUE	48			
	68 42X	GRILLE, SPEAKER-DOOR TRIM	FB05-68-42X	2		
		DARK GRAY	07			
		DARK GRAY	09			
		RED	10			
		BLUE	48			
		BLUE	50			
	68 432	NUT, SPEED	G033-68-432	2		
	68 433	POCKET (R), DOOR TRIM	FB67-68-427	1		
		BLACK	02			
		DARK GRAY	07			
		BLUE	48			
	68 433Z	POCKET (L), DOOR TRIM	FB67-68-457	1		
		BLACK	02			
		DARK GRAY	07			
		BLUE	48			
	68 441	GARNISH (R), DOOR	FB67-68-422	1		
	68 441Z	GARNISH (L), DOOR	FB67-68-452	1		
	68 44X	GRILLE (R), VENT-DOOR TRIM	FB01-68-44X	1		
		BLACK	02			
		DARK GRAY	07			
		RED	10			
		BLUE	48			
	68 44XZ	GRILLE (L), VENT-DOOR TRIM	FB01-68-47X	1		

5840AB-3 FRONT DOOR TRIMS & RELATED PARTS (CONVERTIBLE)

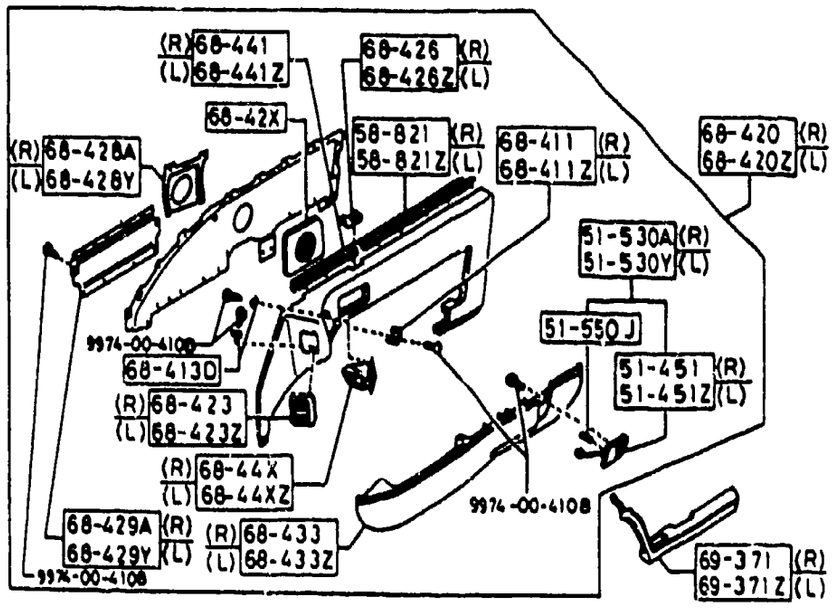

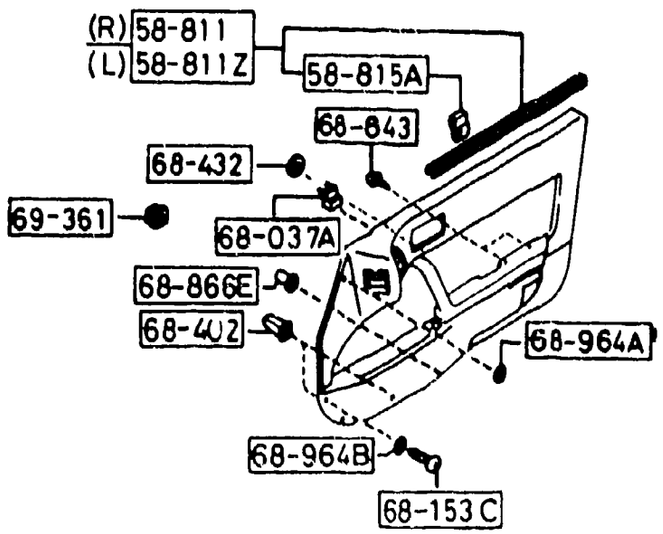

ITEM NO.	D-CODE	DESCRIPTION	PART NO.	QTY	MODEL/DESCRIPTION	REMARKS
	68 44XZ (CONT'D)	BLACK	02			
		DARK GRAY	07			
		RED	10			
		BLUE	48			
	68 843	SCREW, TAPPING	UB39-68-805	4		
	68 866E	FASTENER, SEAL	0187-58-922	2		
	68 964A	WASHER	G030-68-964C	2		
		BLACK	00			
	68 964B	WASHER	FB01-68-427	6		
		BLACK	02			
		DARK GRAY	04			
		RED	11			
		BLUE	48			
	69 361	GROMMET, SCREW	H001-69-361	12		-8801
			B316-69-361	12		8801-
	69 371	REST (R), ARM	FB01-69-370	1		
		BLACK	02			
		DARK GRAY	04			
		RED	11			
		BLUE	48			
	69 371Z	REST (L), ARM	FB01-69-390	1		
		BLACK	02			
		DARK GRAY	04			
		RED	11			
		BLUE	48			

8801 FC33* -627778

6100-1 HEATER

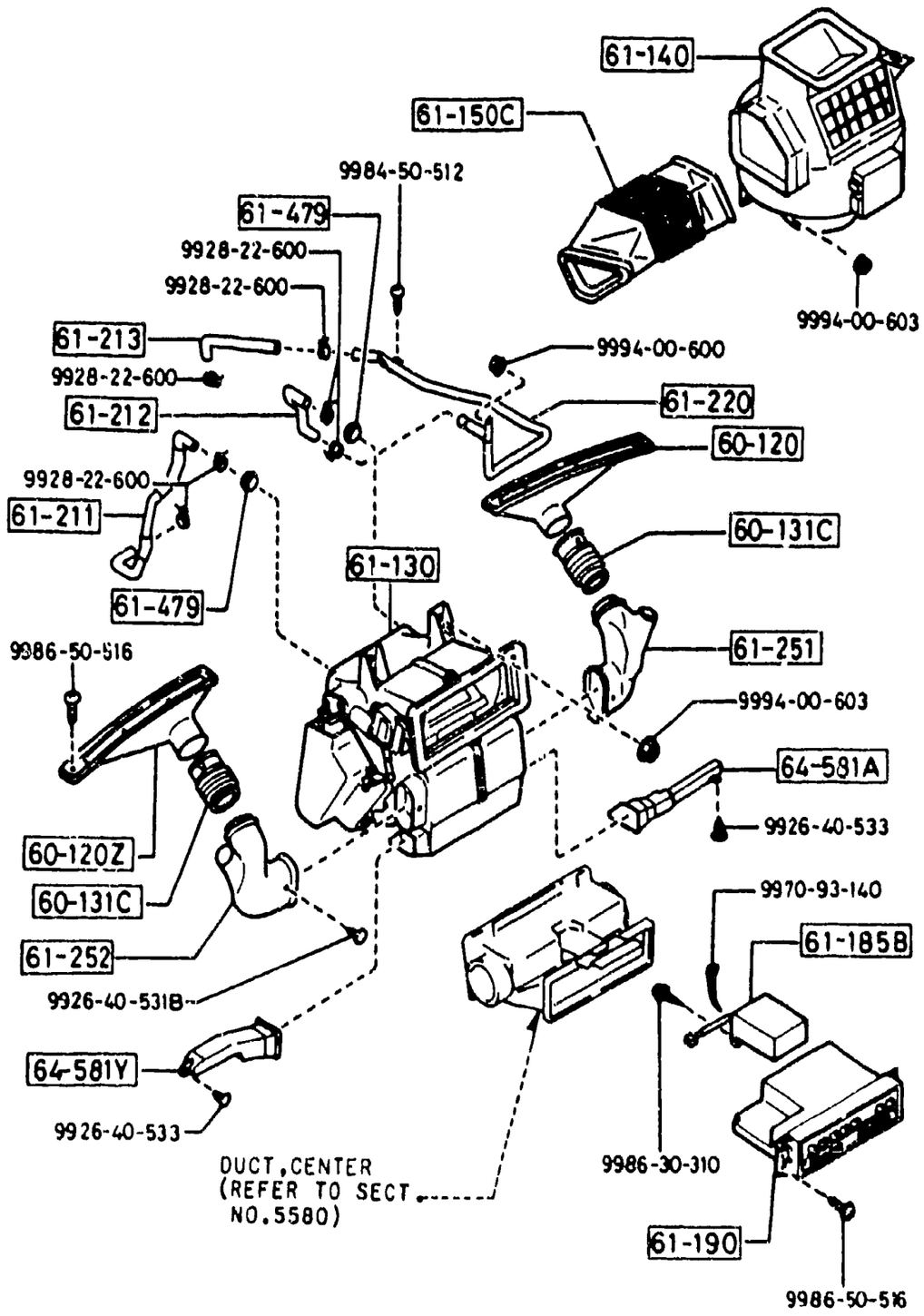

ITEM NO	D-CODE	DESCRIPTION	PART NO.	QTY	MODEL/DESCRIPTION	REMARKS
	60 120	NOZZLE (R), DEFROSTER	FB01-60-121B	1		
	60 120Z	NOZZLE (L), DEFROSTER	FB01-60-141B	1		
	60 131C	DUCT, DEFROSTER	FB01-61-256	2		
	61 130	HEATER UNIT	FB01-61-130A	1		
	61 140	BLOWER UNIT	FB05-61-140	1	W/O IGN. RELAY	
			FB01-61-140F	1	W. IGN. RELAY	
	61 150C	DUCT, AIR	FB01-61-150A	1		
	61 185B	BOX, AMP-HEATER CONTROL	FB01-61-185A	1		
		REFER TO SERV. BULL. NO. 037 86, CAT. 15, FOR MORE INFO.				
		<A>	FB01-61-185B	1		
	61 190	CONTROL, HEATER	FB03-61-190C	1		
	61 211	HOSE NO. 1, WATER	FB03-61-211	1	TURBO, M T	-6220
				1	M T, W O TURBO	5912-
			FB01-61-211C	1	M T, W O TURBO	-5912
				1	M T, TURBO	6220-6401
	61 212	HOSE NO 2, WATER	FB01-61-212B	1		
	61 213	HOSE NO 3, WATER	FB01-61-213	1		
	61 220	PIPE, HEATER	FB44-61-220A	1	TURBO	
			FB01-61-220C	1	W O TURBO	
	61 251	HOSE, DEFROSTER	FB01-61-251A	1		
	61 252	HOSE DEFROSTER	FB01-61-252	1		
	61 479	GROMMET	8871-61-219A	2		
	64 581A	DUCT (R), SHOWER	FB02-61-155C	1		
		DARK GRAY	07			
		RED	10			
		BLUE	48			
	64 581Y	DUCT (L) SHOWER	FB02-61-156B	1		

5912	FC33*	104162
6220	FC33*	132891
6401	FC33*	140158

SECTION INDEX -- BODY

STARTING LOCATION	SECT NO	SECTION NAME
2 - C 3	0900A	KEY SETS
2 - E 3	5000	FRONT BUMPER
2 - F 3	5005	RADIATOR GRILLE
2 - G 3	5010A	REAR BUMPER
2 - H 3	5030A	WINDOW MOULDINGS
2 - I 3	5040A	BODY MOULDINGS
2 - J 3	5060A	SIDE PROTECTORS
2 - K 3	5100	HEAD LAMPS
2 - L 3	5103	HEAD LAMP RETRACTORS
2 - M 3	5105	FRONT COMBINATION LAMPS
2 - C 4	5110A	REAR COMBINATION LAMPS
2 - E 4	5120	LICENSE LAMPS
2 - F 4	5125	INTERIOR LAMPS
2 - G 4	5130	OVERHEAD CONSOLE (COUPE)
2 - H 4	5170	ORNAMENTS
2 - I 4	5180	COWL & EXTRACTOR GILLES
2 - K 4	5230	HOOD
2 - L 4	5260	TRUNK LID (CONVERTIBLE)
2 - M 4	5310	BODY PANELS (FRONT) (COUPE)
2 - N 4	5310A	BODY PANELS (FRONT) (CONVERTIBLE)
2 - C 5	5320	BODY PANELS (FENDER & WHEEL APRON) (COUPE)
2 - D 5	5320B	BODY PANELS (FENDER & WHEEL APRON) (CONVERTIBLE)
2 - E 5	5330	BODY PANELS (DASH & COWL PANEL)
2 - F 5	5340A	BODY PANELS (SIDE) (COUPE)
2 - H 5	5340AA	BODY PANELS (SIDE) (CONVERTIBLE)
2 - K 5	5360A	BODY PANELS (ROOF) (COUPE)
2 - L 5	5370	BODY PANELS (FLOOR) (COUPE)
2 - M 5	5370A	BODY PANELS (FLOOR) (CONVERTIBLE)
2 - C 6	5390	FLOOR ATTACHMENTS (COUPE)
2 - E 6	5390A	FLOOR ATTACHMENTS (CONVERTIBLE)
2 - G 6	5500	DASHBOARD EQUIPMENTS (COUPE) (W O ANTI-LOCK BRAKE SYSTEM)
2 - I 6	5500A	DASHBOARD EQUIPMENTS (COUPE) (ANTI-LOCK BRAKE SYSTEM)
2 - J 6	5500B	DASHBOARD EQUIPMENTS (CONVERTIBLE)
2 - K 6	5520	METER HOOD
2 - L 6	5530	SPEEDOMETER CABLE
2 - M 6	5540	METER COMPONENTS (COUPE) (W O ANTI-LOCK BRAKE SYSTEM)
2 - C 7	5540A	METER COMPONENTS (COUPE) (ANTI-LOCK BRAKE SYSTEM)
2 - E 7	5540B	METER COMPONENTS (CONVERTIBLE)
2 - F 7	5560	DASHBOARD & RELATED PARTS
2 - I 7	5570	CONSOLE
2 - K 7	5580	VENTILATOR
2 - C 8	5700A	FRONT SEATS (COUPE)
2 - C 9	5700AA	FRONT SEATS (COUPE) (LEATHER)
2 - C10	5700AB	FRONT SEATS (CONVERTIBLE) (CLOTH)
2 - F10	5700AC	FRONT SEATS (CONVERTIBLE) (LEATHER)
2 - J10	5750A	REAR SEATS (CLOTH)
2 - C11	5750AA	REAR SEATS (LEATHER)
2 - H11	5790A	SEAT BELTS
2 - J11	5800A	FRONT DOORS (COUPE)
2 - K11	5800AA	FRONT DOORS (CONVERTIBLE)
2 - C12	5830A	FRONT DOOR MECHANISMS (COUPE)
2 - H12	5830AA	FRONT DOOR MECHANISMS (CONVERTIBLE)
2 - C13	5840A	FRONT DOOR TRIMS & RELATED PARTS (COUPE)
2 - K13	5840AB	FRONT DOOR TRIMS & RELATED PARTS (CONVERTIBLE)
2 - N13	6100	HEATER
2 - C14	6110	HEATER UNIT COMPONENTS
2 - D14	6115	HEATER CONTROLS COMPONENTS
2 - E14	6120	HEATER BLOWER COMPONENTS
2 - F14	6130	AIR CONDITIONER (W O AIR CONDITIONER)
2 - G14	6132A	CONDENSER PACKAGE
2 - I14	6142A	COMPRESSOR MOUNTING KIT. COMPRESSOR CLUTCH ASSEMBLY & REPAIR PARTS
2 - J14	6152A	EVAPORATOR PACKAGE
2 - K14	6200	LIFT GATE
2 - L14	6230	LIFT GATE MECHANISMS (COUPE)
2 - N14	6300A	WINDOW GLASSES
2 - C15	6330	SUNROOF (COUPE)
2 - E15	6330A	SOFT TOP (CONVERTIBLE)
2 - G15	6600B	SWITCHES & RELAYS (ENGINE) (W O TURBO)
2 - J15	6600BA	SWITCHES & RELAYS (ENGINE) (TURBO)
2 - M15	6610	DASHBOARD SWITCHES (MANUAL OPERATING)
2 - N15	6611	COMBINATION SWITCH
2 - C16	6612	CLUSTER SWITCH
2 - D16	6615	POWER WINDOW SWITCHES
2 - E16	6620	DOOR SWITCH
2 - F16	6630	RELAYS & CPU (BODY)
2 - G16	6635	HORNS
2 - H16	6640	AUTO CRUISE CONTROL SYSTEM
2 - I16	6680	AUDIO SYSTEMS (RADIO & TAPE DECK)

6110-1 HEATER UNIT COMPONENTS

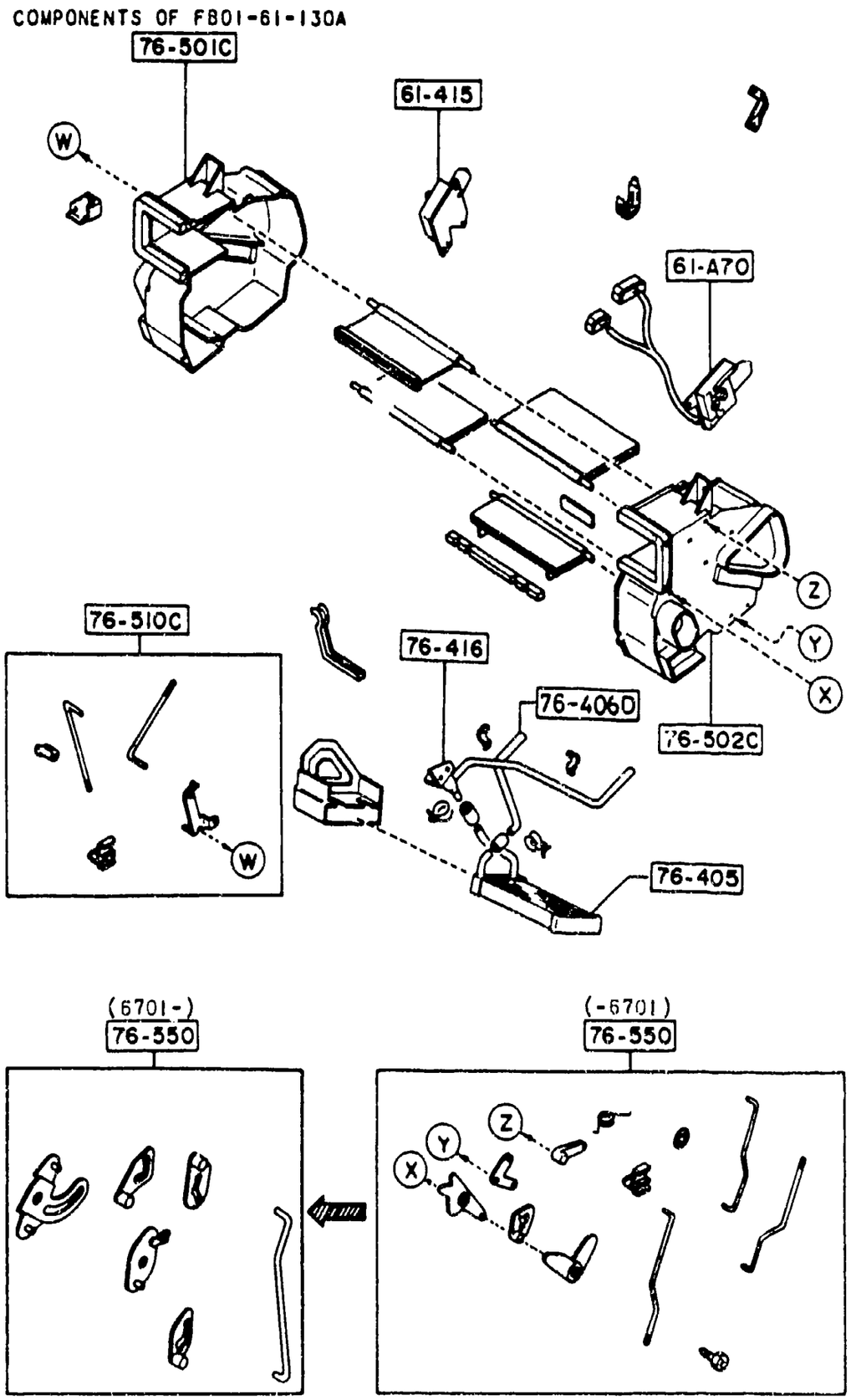

ITEM NO	D-CODE	DESCRIPTION	PART NO.	QTY	MODEL/DESCRIPTION	REMARKS
	61 415	ACTUATOR, TEMPERATURE	FB01-61-A60A	1		
	61 A70	ACTUATOR, MODE-HEATER UNIT	FB01-61-A70	1		-6701
			FB01-61-A70A	1		6701-
	76 405	CORE, HEATER	FB01-61-A10	1		
	76 406D	PIPE, HEATER UNIT	FB01-61-A15	1		
	76 416	VALVE, WATER	FB01-61-A40	1		
	76 501C	CASE (R), HEATER UNIT	FB01-61-A01	1		
	76 502C	CASE (L), HEATER UNIT	FB01-61-A02	1		-6701
			FB01-61-A02A	1		6701-
	76 510C	LINK SET TEMPERATURE	FB01-61-A20	1		
	76 550	LINK SET, MODE	FB01-61-A30	1		-6701
			FB01-61-A30A	1		6701-

6701 FC33* -500010

6115-1 HEATER CONTROLS COMPONENTS

COMPONENTS OF FB03-61-1908
FB03-61-190C

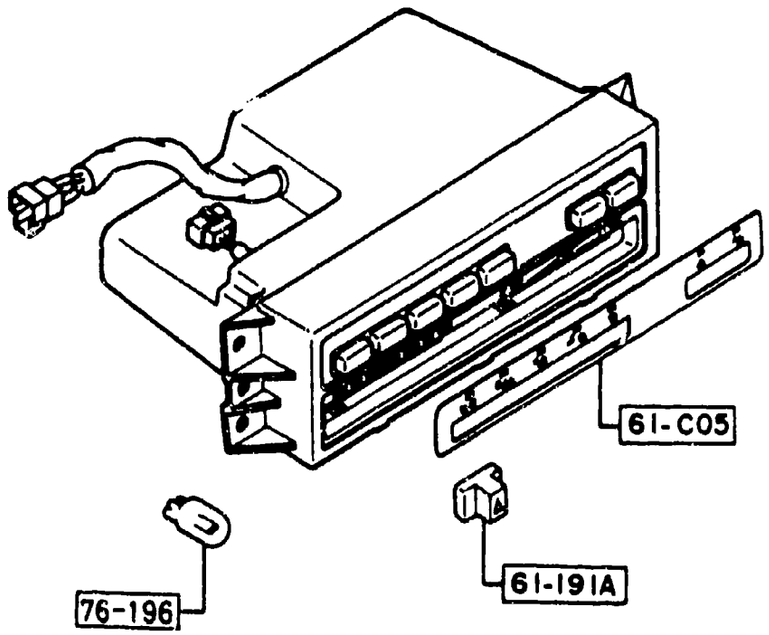

ITEM NO.	D-CODE	DESCRIPTION	PART NO.	QTY	MODEL/DESCRIPTION	REMARKS
	61 191A	KNOB NO. 1	FB03-61-191	2		
	61 C05	FILM PANEL-NO. 1	FB03-61-C05	1		
	76 196	BULB	FA55-76-196	2		

6120-1 HEATER BLOWER COMPONENTS

COMPONENTS OF FB01-61-140F
FB05-61-140

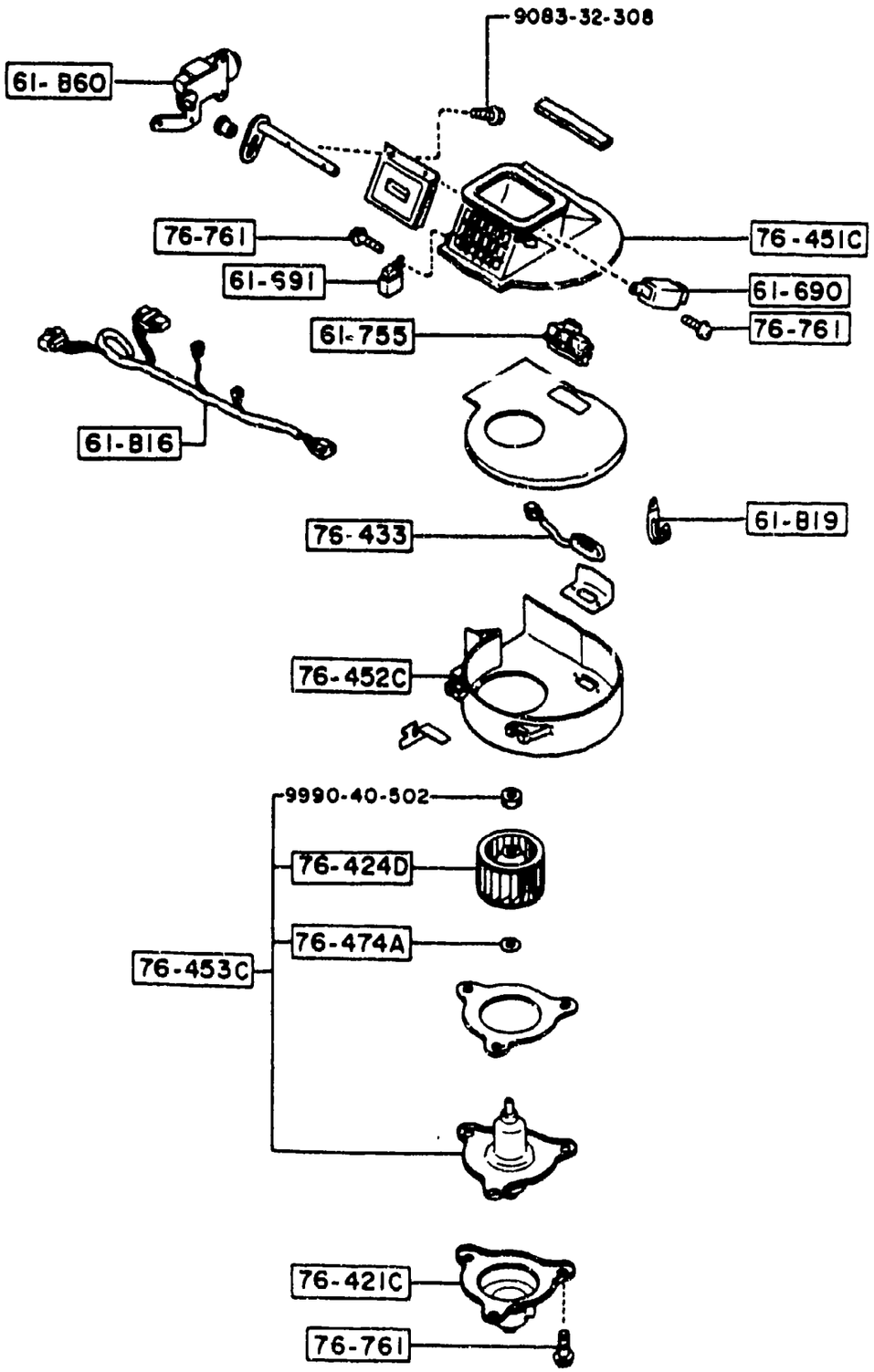

ITEM NO.	D-CODE	DESCRIPTION	PART NO.	QTY	MODEL/DESCRIPTION	REMARKS
	61 690	RELAY	FB03-61-591	1	W/ IGN. RELAY BLOWER	
	61 691	RELAY	FB02-61-691	1		
	61 755	TRANSISTOR, POWER	FB01-61-769	1		
	61 B16	HARNESS, BLOWER UNIT	FB01-61-B16A	1	W/ IGN. RELAY BLOWER	
			FB05-61-B16	1	W/O IGN. RELAY BLOWER	
	61 B19	CLIP, MOTOR-BLOWER UNIT	FB01-61-B19	1		
	61 B60	ACTUATOR, RECYCLE & FRESH	FB01-61-B00	1		
	76 421C	COVER, MOTOR	UB39-61-B40	1		
	76 424D	FAN, MOTOR	8871-76-456	1		
	76 433	RESISTOR, BLOWER UNIT	FB01-61-B15	1		
	76 451C	CASE (R), BLOWER	FB01-61-B01	1		
	76 452C	CASE (L), BLOWER	FB01-61-B02A	1		
	76 453C	MOTOR, BLOWER	UB94-61-B10	1		
	76 474A	WASHER, PLAIN	FA55-76-474	1		
	76 761	SCREW	FA55-76-455	5		

AIR CONDITIONER (W/O AIR CONDITIONER)

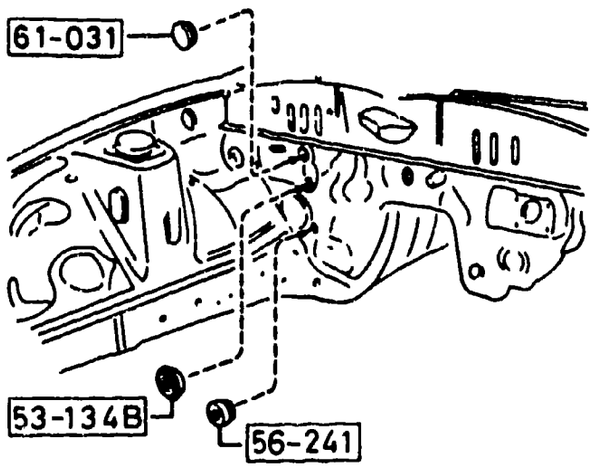

ITEM NO.	D-CODE	DESCRIPTION	PART NO.	QTY	MODEL/DESCRIPTION	REMARKS
	53 134B	RUBBER, DUST SEAL	0187-53-134	1		
	56 241	PLUG, DRAIN	0118-56-241	1		
	61 031	PLUG, HOLE	1708-61-031	1		

6132A-1 CONDENSER PACKAGE

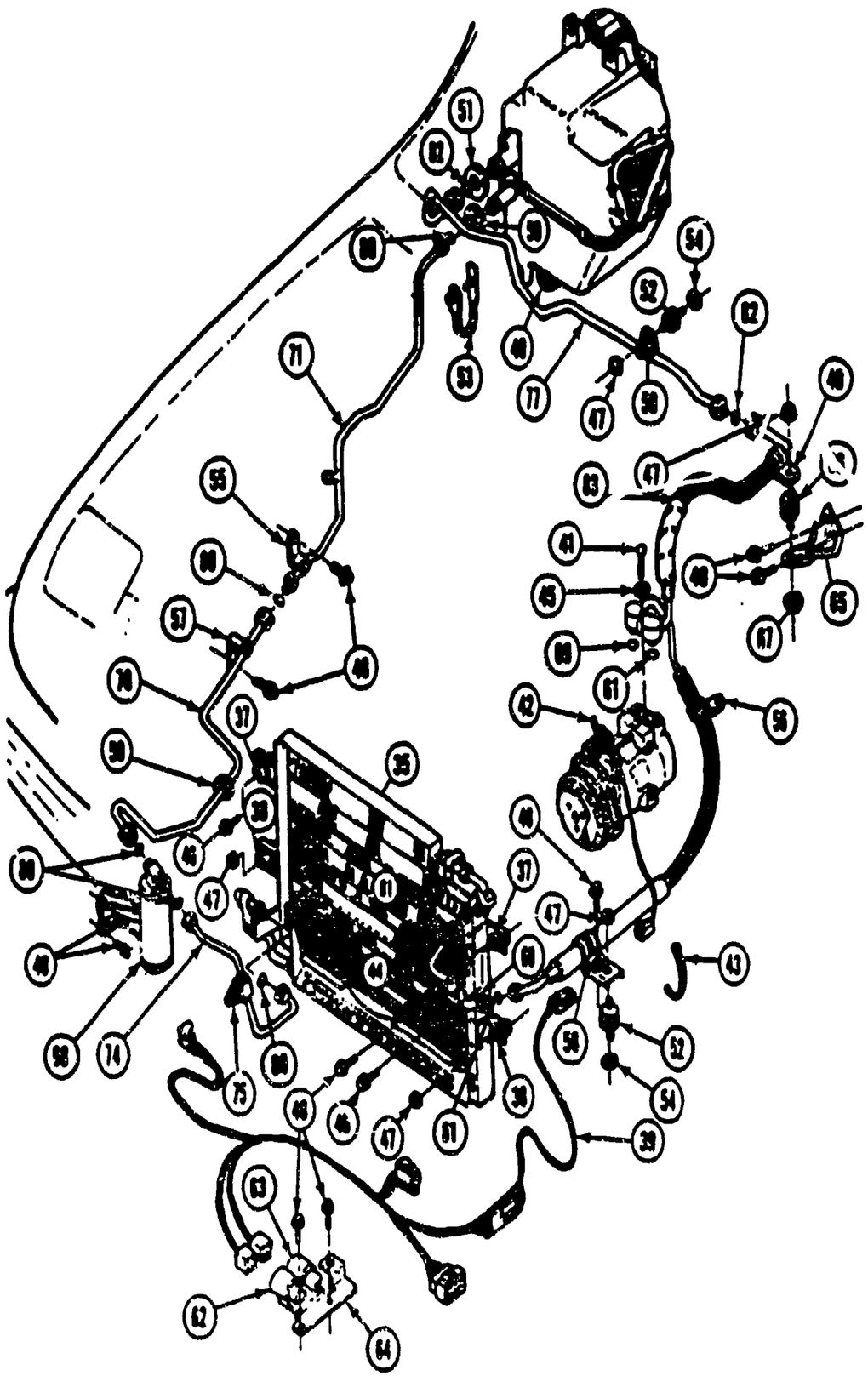

ITEM NO.	D-CODE	DESCRIPTION	PART NO.	QTY	MODEL/DESCRIPTION	REMARKS
		REFER TO ACC. BULL. NO. XA-1 FOR A/C ACC. INFO.				
35		CONDENSER ASSEMBLY	0000-67-A10A-6A	1		FC33* -860917
		<A>	0000-67-A00A-7A	1		FC33* 860918-
37		GROMMET	0000-67-A48A-6F	2		
38		BUSHING	0000-67-A49A-6F	2		
39		HARNESS, WIRE	0000-67-B80A-6A	1		
40		CLIP	0000-67-A43A-6A	1		
41		BOLT	0000-67-X10M-25	1		
42		TY-RAP	0000-67-1410-27	1		
43			0000-67-X60A-00	6		
44		CLIP	0000-67-A42A-6A	1	USE W/ 0000-67-A10A-6A	
45		WASHER	0000-67-1983-82	1		
46		BOLT	0000-67-X4[illegible]-36	2		
47		NUT	0000-67-X20M-00	5		
48		BOLT	0000-67-X40M-35	10		
49		GROMMET	0000-67-B01A-6A	1	'87 TURBO	
50			0000-67-A44A-6F	2		
51		L-GROMMET	0000-67-A434-6F	1		
52		INSULATOR, RUBBER	0000-67-A57B-6P	2		
53		CLIP	0000-67-B54A-6A	1		
54		WASHER	0000-67-X40M-25	2		
55		CLIP	0000-67-A45A-6A	1		
56			0000-67-A41A-6A	1		
57			0000-67-A40A-6A	1		
58			0000-67-A44A 3A	1		
5[illegible]			0000-67-A28A-6A	1		
60		O-RING	0000-67-0123-38	1		
61			0000-67-0123-39	1		
62		RELAY	0000-67-B46A-6A	1		
63			0000-67-B48A-6A	1		
64		BRACKET	0000-67-A29A-6A	1		
65			0000-67-A27A-6A	1		
66		INSULATOR, RUBBER	0000-67-A57B-6P	1		
67		NUT	0000-67-X20M-02	1		
68		RECEIVER/DRIER	0000-67-A90A-6A	1		
69		PIPE NO. 2	0000-67-E414-6A	1	USE W/ 0000-67-A10A-6A	
70		PIPE NO. 4	0000-67-E21A-6A	1	'86	
			0000-67-E24A-6A	1	'87 TURBO	
71		PIPE NO. 5	0000-67-E22A-6A	1	'86	

6132A-2 CONDENSER PACKAGE

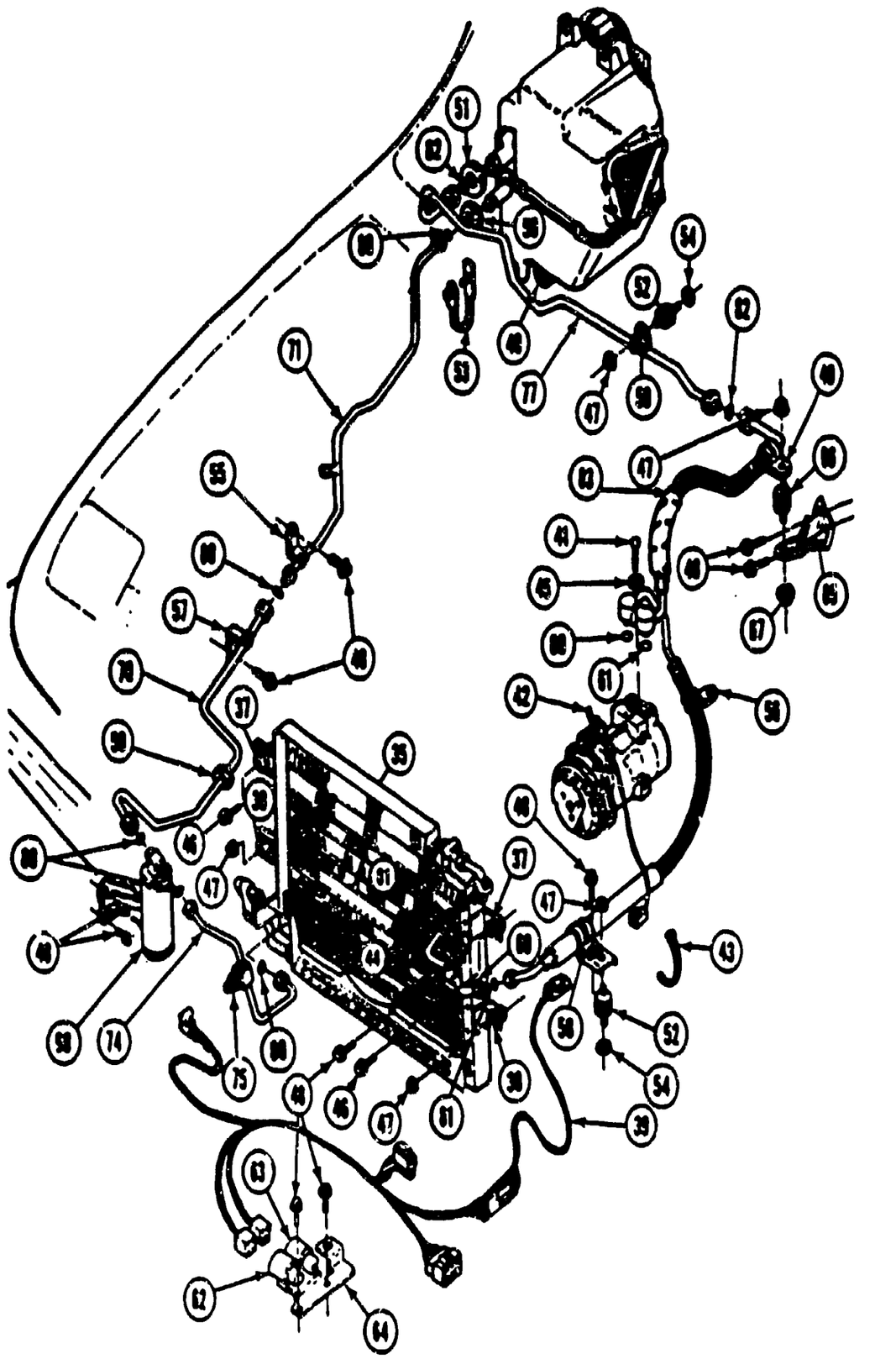

ITEM NO.	D-CODE	DESCRIPTION	PART NO.	QTY	MODEL/DESCRIPTION	REMARKS
	61 031 (CONT'D)		0000-67-E25B-6A	1	'87 TURBO	
		VALVE, SCHRAEDER	0000-67-501A-7F	1		
74		PIPE NO. 6	0000-67-E20A-6A	1		
75		SWITCH	0000-67-A92A-3B	1		
		O-RING	0000-67-0508-43	1		
77		PIPE, COOLER NO. 7	0000-67-E23A-6A	1		
			0000-67-E21A-7A	1	'87 SI ABS	
			0000-67-E26A-6A	1	'87 TURBO	
80		O-RING	0000-67-0123-17	5		
81			0000-67-0123-18	2		
82			0000-67-0123-19	2		
83		HOSE ASSEMBLY, FLEXIBLE	0000-67-E10A-6A	1		

6142A-1 COMPRESSOR MOUNTING KIT, COMPRESSOR/CLUTCH ASSEMBLY & REPAIR PARTS

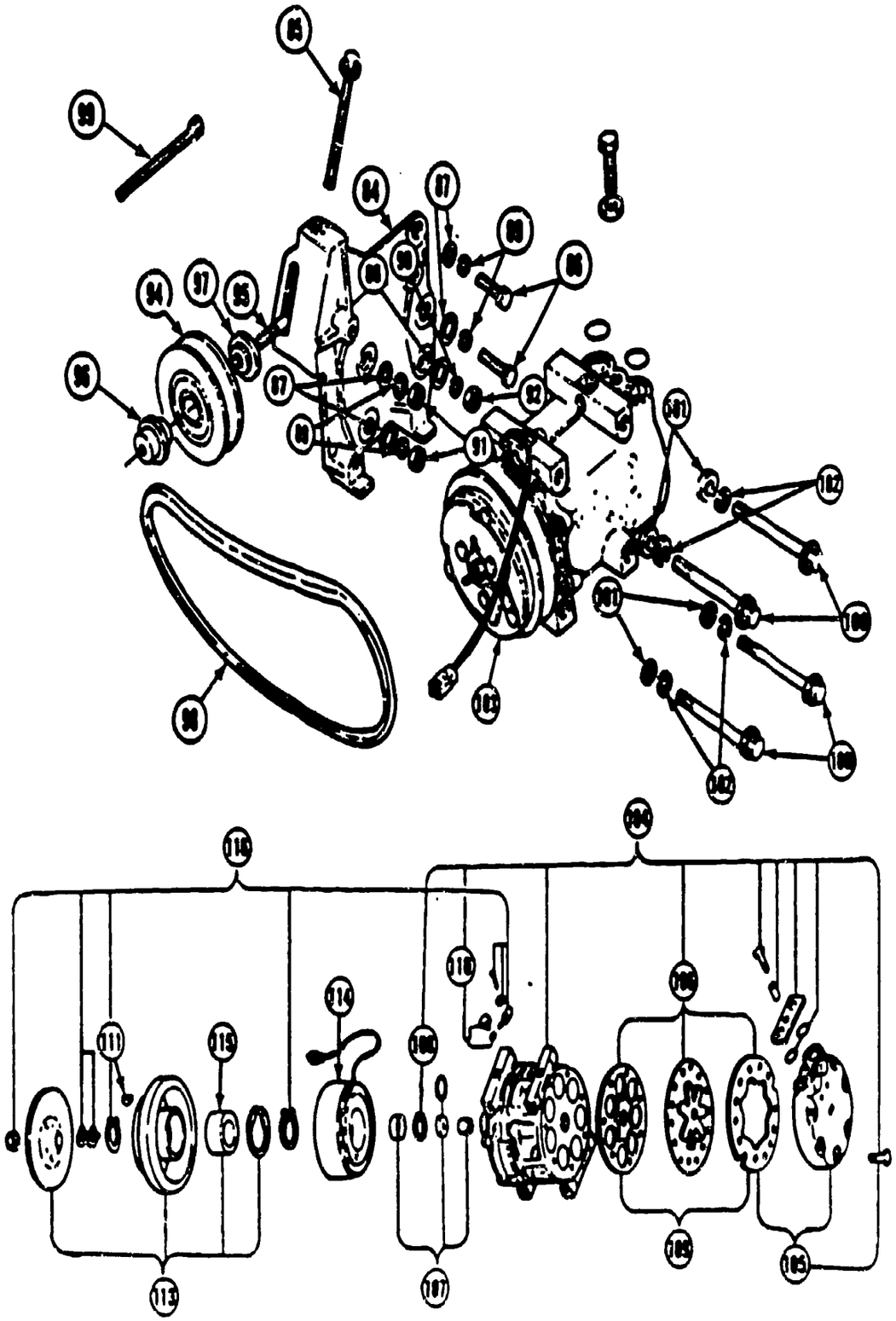

ITEM NO.	D-CODE	DESCRIPTION	PART NO.	QTY	MODEL/DESCRIPTION	REMARKS
		REFER TO ACC. BULL. NO. XA-1 FOR A/C ACC. INFO.				
84		BRACKET, COMPRESSOR	0000-67-C10A-6A	1		
85		BOLT, ADJUSTING	0000-67-X10M-30	1		
86		BOLT	0000-67 5715-75	2		
87		WASHER	0000-67-1983-82	4		
88			0000-67-X40A-02	1		
89			9997-11-0000	4		
90			0000-67-X40A-01	1		
91		NUT	0000-67-1983-77	2		
92			0000-67-1983-76	1		
84		BRACKET, COMPRESSOR	0000-67-C10A-6A	1		
94		PULLEY, IDLER	0000-67-C42A-6A	1		
95		SHAFT, IDLER PULLEY	0000-67-C41A-6A	1		
96		NUT	0000-67-C44A-3F	1		
97		SPACER	0000-67-C43A-3F	1		
98		BELT	0000-67-C31A-6A	1		
99		BOLT	0000-67-X10M-34	1		
100			0000-67-X10M-48	4		
101		WASHER	0000-67-X40M-09	4		
102			0000-67-X40M-15	4		
103		COMPRESSOR/CLUTCH ASSEMBLY	0000-67-D10A-6A	1		
104		COMPRESSOR	0000-67-D00A-6A	1		
105		HEAD, CYLINDER	0000-67-D56A-6A	1	W/ GASKET	
106		VALVE PLATE ASSEMBLY	0000-67-D51A-6A	1		
107		SEAL KIT & FELT RING	0000-67-D12A-6A	1		
108		RING, SNAP	0000-67-D60A-6A	1		
109		GASKET KIT	0000-67-D13A-6A	1		
110		PLUG	0000-67-D61A-6A	1	W/O RING	
111		KEY, SHAFT	0000-67-D11A-6A	1		
		CLUTCH ASSEMBLY	0000-67-D20A-6A	1		
113		PLATE & ROTOR, FRONT	0000-67-D22A-6A	1		
114		COIL, FIELD	0000-67-D24A-6A	1		
115		BEARING	0000-67-D23A-6A	1		
116		ACCESSORY KIT	0000-67-D21A-6A	1		

6152A-1 EVAPORATOR PACKAGE

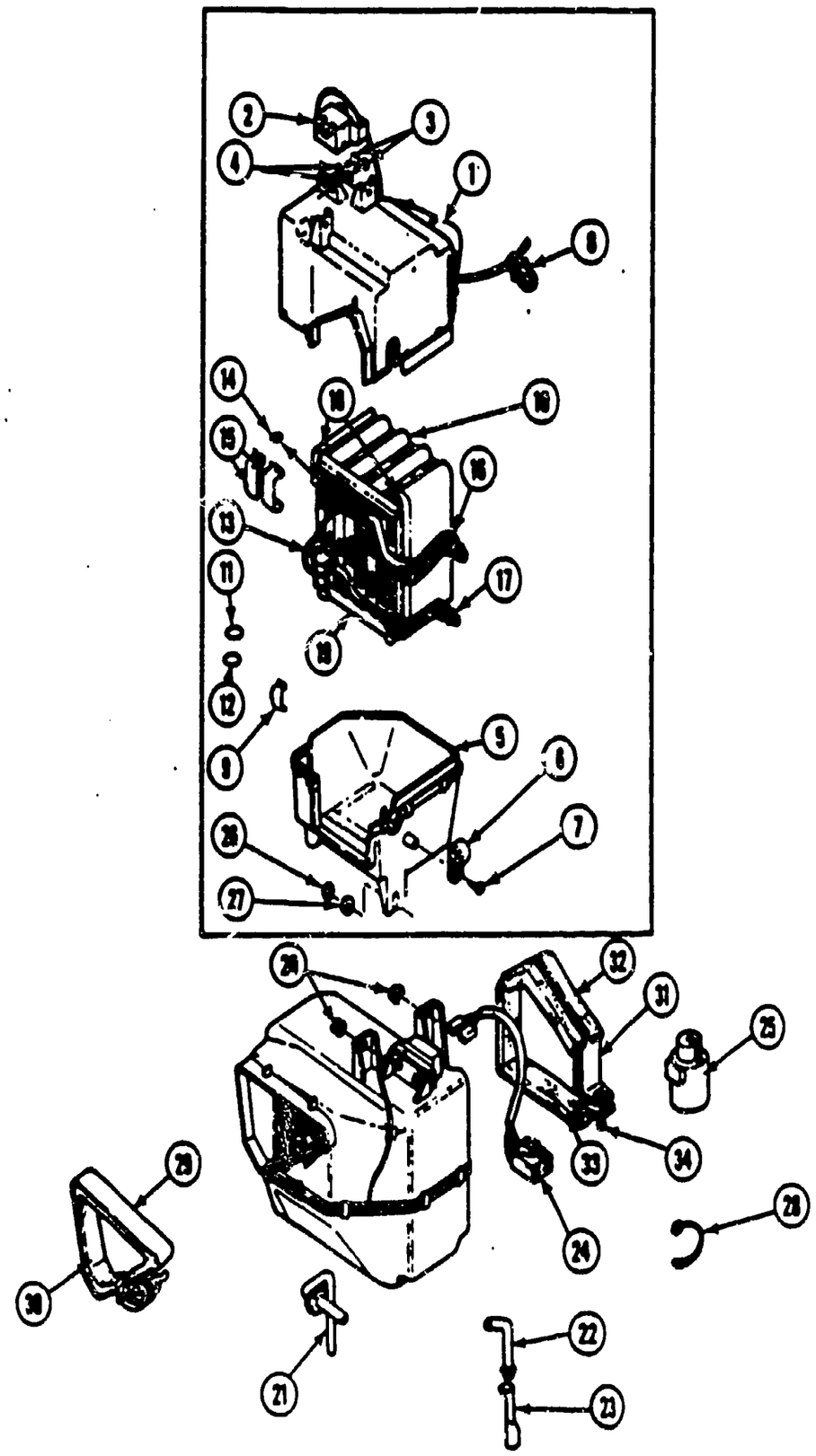

ITEM NO.	D-CODE	DESCRIPTION	PART NO.	QTY	MODEL/DESCRIPTION	REMARKS
		REFER TO ACC. BULL. NO. XA-1 FOR A/C ACC. INFO.				
1		CASE, TOP	0000-67-B11A-6A	1	W/ INSULATOR	
2		THERMOSTAT	0000-67-B93A-6F	1		
3		BOLT	0000-67-X10M-36	2		
4		WASHER	0000-67-X40M-30	2		
5		CABINET, BOTTOM	0000-67-B21A-6A	1	W/ INSULATION	
6		CLIP	0000-67-B51A-6A	1		
7		SCREW	0000-67-X30B-03	1		
8		RETAINER, T-STAT	0000-67-B56A-6F	1		
9		CLIP	0000-67-B46A-3B	1		
10		COIL, EVAPORATOR	0000-67-B30A-6A	1		
11		O-RING	0000-67-0123-18	1		
12			0000-67-0123-19	1		
13		VALVE, EXPANSION	0000-67-B40B-6A	1		
14		O-RING	0000-67-0123-21	1		
15		CLAMP	0000-67-B44A-3B	2		
16		TAPE, PRESTITE	0000-67-B16A-8F	1		
17		TUBE, EXTENSION	0000-67-B38A-6A	1		
18		TAPE, INSULATION	0000-67-B28A-6F	2		
19			0000-67-B52A-6A	2		
20		NUT	0000-67-X20M-00	2		
21		HOSE, DRAIN	0000-67-B39A-6A	1		
22			0000-67-B03A-6A	1		
23		PIPE, COOLER	0000-67-B04A-6A	1		
24		HARNESS, WIRE	0000-67-B81A-6A	1		
25		RELAY	0000-67-B46A-6A	1		
26		NUT	0000-67-0411-12	1		
27		WASHER	0000-67-X40M-02	1		
28		TY-RAP	0000-67-X60A-00	1		
29		PLATE NO. 2, SEAL	0000-67-B13A-6A	1		
30		TAPE, FOAM	0000-67-B41A-6A	1		
31		PLATE NO. 1, SEAL	0000-67-B14A-6A	1		
32		TAPE, FOAM	0000-67-B41A-6A	1		
33			0000-67-X40A-32	1		
34		SCREW	9983-00-525	1		

6200-1 LIFT GATE

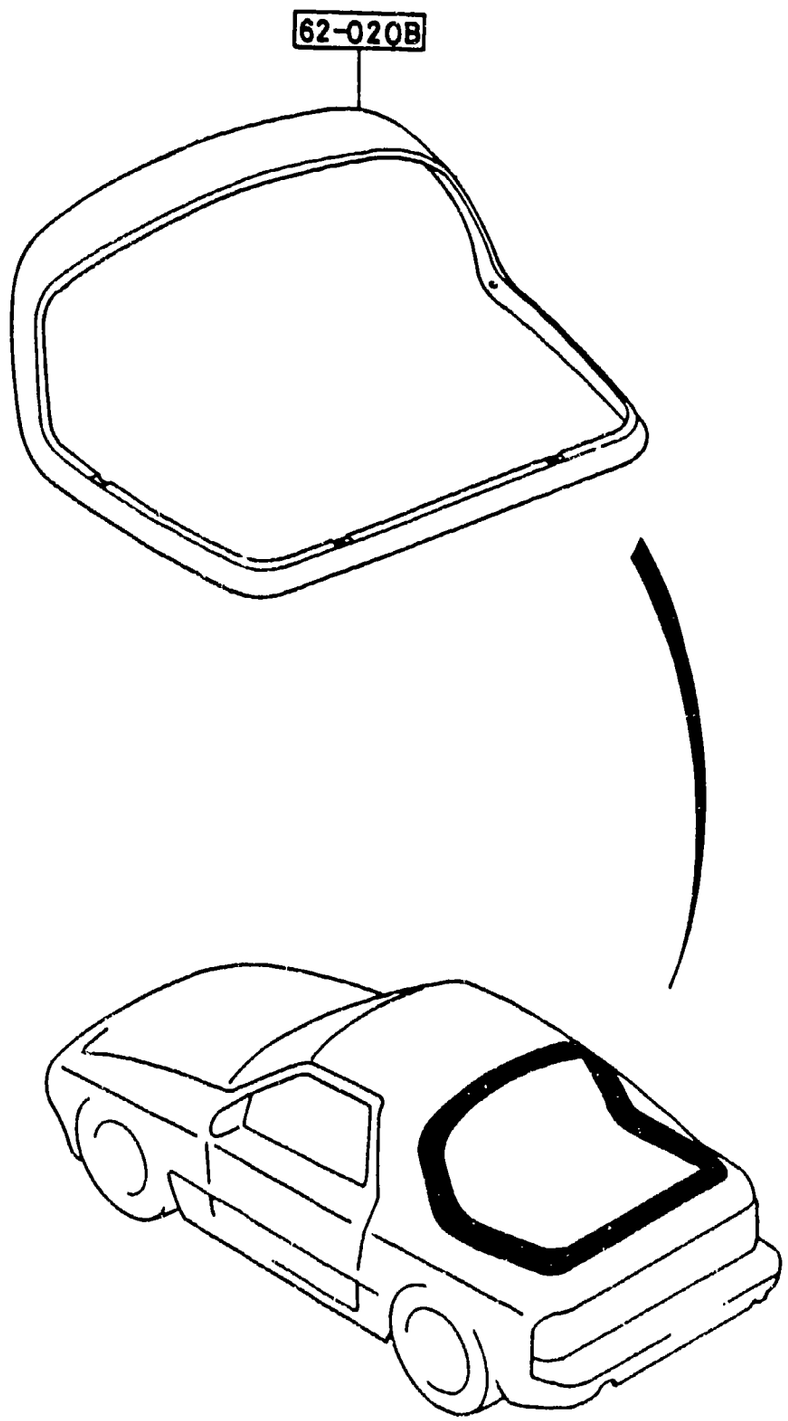

ITEM NO.	D-CODE	DESCRIPTION	PART NO.	QTY	MODEL/DESCRIPTION	REMARKS
	62 020B	FRAME, GLASS HATCH	FB01-62-020F	.	W/O RR. WIPER	
			FB02-62-020E	1	W/ RR. WIPER	

6230-1 LIFT GATE MECHANISMS (COUPE)

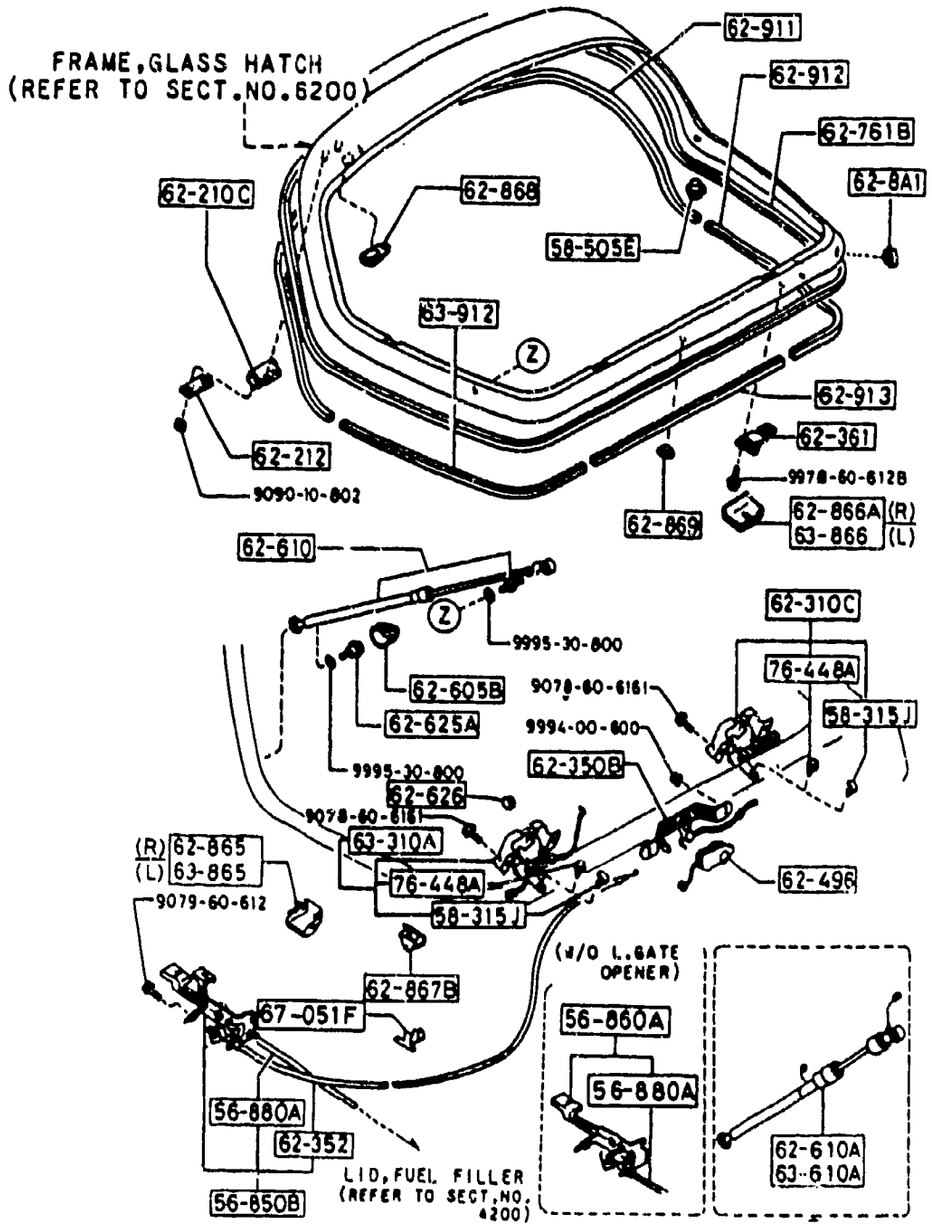

D-CODE	SPECIFICATIONS		PART NO OF STAY DAMPER		FROM – TO
	REAR WIPER	CARGO ROOM LAMP	RIGHT SIDE	LEFT SIDE	
62-610 (R) 62-610 (L)	–	–	8BF1-62-620 8BF1-62-620A	8BF1-62-620 8BF1-62-620A	– 7701 7701 –
62-610 (R) 62-610 (L)	–	×	8BF2-62-620 8BF2-62-620A	8BF1-62-620 8BF1-62-620A	– 7701 7701 –
62-610A (R) 63-610A (L)	×	–	8BF4-62-620 8BF4-62-620A	8BF2-63-620 8BF2-63-620A	– 7701 7701 –
62-610A (R) 63-610A (L)	×	×	8BF3-62-620 8BF3-62-620A	8BF2-63-620 8BF2-63-620A	– 7707 7707 –

ITEM NO.	D-CODE	DESCRIPTION	PART NO.	QTY	MODEL/DESCRIPTION	REMARKS
	56 850B	OPENER, L/GATE & F/LID	FB01-56-850B	1		-5901
			FB02-56-850E	1		5901-
	56 860A	LEVER, OPENER	G031-56-860A	1	W/O L/GATE OPENER	
	56 880A	CABLE, F/LID OPENER	FB01-56-870B	1		
	58 315J	CLIP	H001-58-315	2	COUPE	
	58 505E	CAP	B092-58-355	1		-5B01
				2	COUPE	5B01-
	62 210C	HINGE, GLASS HATCH	FB01-62-210A	2	COUPE	
	62 212	GASKET, HINGE-LIFT GATE	FB01-62-212	2	COUPE	
	62 310C	LOCK (R), GLASS HATCH	FB01-62-310D	1		
	62 350B	UNIT, OPENER-GLASS HATCH	FB01-62-350D	1		
	62 352	CABLE, OPENER	FB67-56-930D	1	CONV.	
			FB01-56-880B	1		
	62 361	STRIKER, LOCK	FB01-62-361B	2		
	62 496	SWITCH, LOCK CYLINDER	FB02-62-496A	1	W/ BURGLAR ALARM	
	62 605B	COVER, DAMPER STAY	FB01-62-615	2		
	62 610	STAY, DAMPER	8BF1-62-620	2	W/O RR. WIPER	-7701
			8BF1-62-620B	2	W/O RR. WIPER	7701-
	62 610A	STAY (R), DAMPER	8BF2-62-620	1	W/O RR. WIPER W/ 3RD BRAKE LIGHT	7701-
			8BF2-62-620A	1	W/O RR. WIPER W/ 3RD BRAKE LIGHT	7701-
			8BF3-62-620	1	W/ RR. WIPER W/ 3RD BRAKE LIGHT	-7701
			8BF3-62-620A	1	W/ RR. WIPER W/ 3RD BRAKE LIGHT	7701-
			8BF4-62-620	1	W/ RR. WIPER W/O 3RD BRAKE LIGHT	-7701
			8BF4-62-620A	1	W/ RR. WIPER W/O 3RD BRAKE LIGHT	7701-
	62 625A	BOLT, BRACKET-STAY DAMPER	FB01-62-625	2		
	62 626	PLUG, HOLE-LAMP & WIPER HARNESS	FB01-62-626	2		
	62 761B	WEATHERSTRIP, GLASS HATCH	FB01-62-761B	1		-7601
		<AN>	FB01-62-761C	1		7601-
	62 865	COVER 'A' (R), FRAME-GLASS HATCH	FB01-62-865A	1		
	62 866A	COVER 'B' (R), FRAME-GLASS HATCH	FB01-62-866B	1		
	62 867B	COVER, BRACKET-DAMPER STAY	FB01-62-867A	2		
	62 868	PLUG, HOLE-HATCH FRAME-UPPER	FB01-62-868	2		
	62 869	PLUG, HOLE-HATCH FRAME-LOWER	FB01-62-869	1		

5901 FC33* -102044
5B01 FC33* -113629
7601 FC33* -550168
7701 FC33* -550169

6230-2 LIFT GATE MECHANISMS (COUPE)

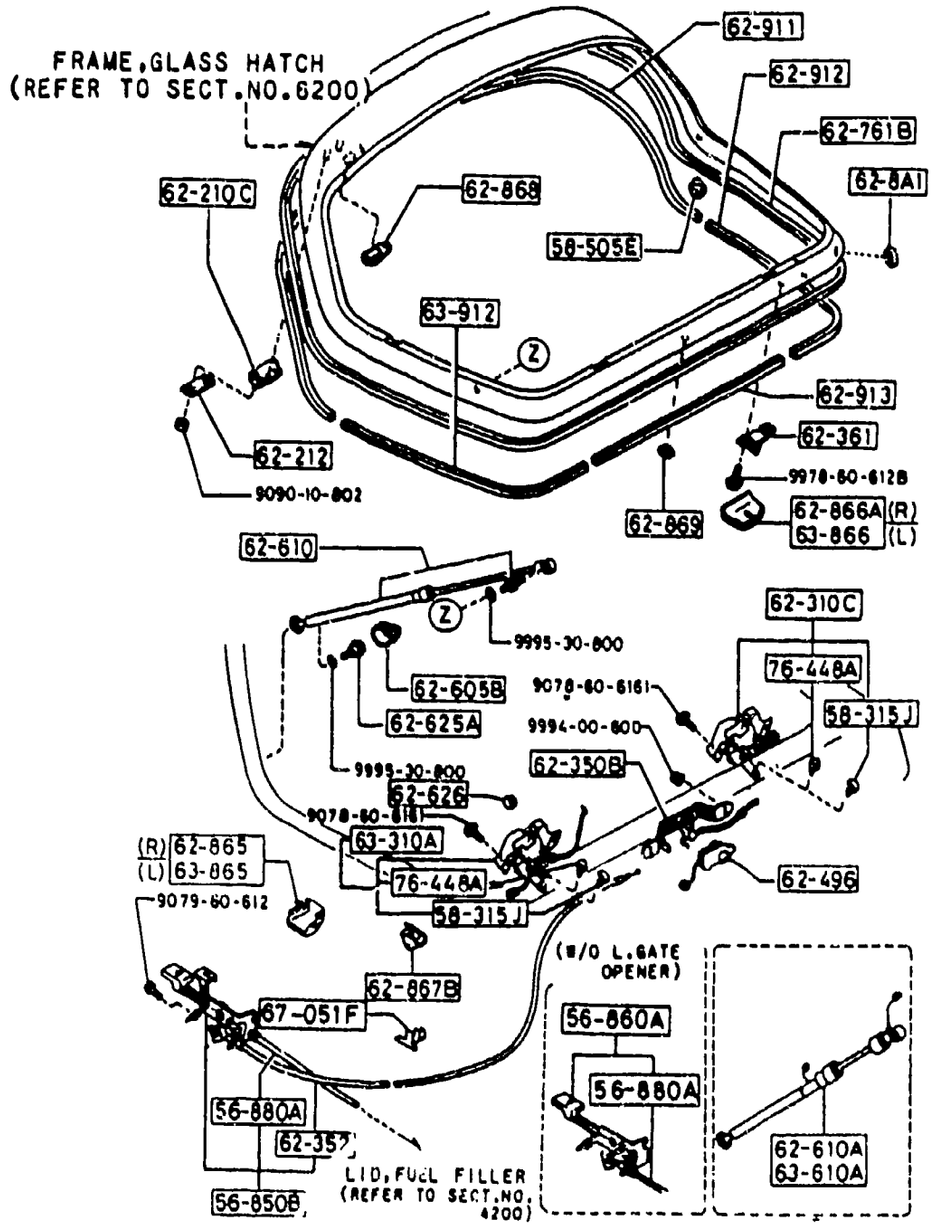

D-CODE	SPECIFICATIONS		PART NO OF STAY DAMPER		FROM-TO
	REAR WIPER	CARGO ROOM LAMP	RIGHT SIDE	LEFT SIDE	
62-610 (R) 62-610 (L)	–	–	8BF1-62-620 8BF1-62-620A	8BF1-62-620 8BF1-62-620A	–7701 7701–
62-610 (R) 62-610 (L)	–	×	8BF2-62-620 8BF2-62-620A	8BF1-62-620 8BF1-62-620A	–7701 7701–
62-610A (R) 63-610A (L)	×	–	8BF4-62-620 8BF4-62-620A	8BF2-63-620 8BF2-63-620A	–7701 7701–
62-610A (R) 63-610A (L)	×	×	8BF3-62-620 8BF3-62-620A	8BF2-63-620 8BF2-63-620A	–7707 7707–

ITEM NO.	D-CODE	DESCRIPTION	PART NO.	QTY	MODEL/DESCRIPTION	REMARKS
	62 8A1	PLUG, HOLE-HATCH FRAME-LOWER	FB01-62-8A1A	2		
	62 911	WELT, SEAMING-GLASS HATCH-UPPER	FB01-62-911C	1		
	62 912	WELT (R), SEAMING-GLASS HATCH	FB01-62-912B	1		
	62 913	WELT, SEAMING-GLASS HATCH-LWR.	FB01-62-913C	1	W/O RR. WIPER	
			FB02-62-913B	1	W/ RR. WIPER	
	63 310A	LOCK (L), GLASS HATCH	FB01-63-310E	1		
	63 610A	STAY (L), DAMPER	8BF2-63-620	1	W/ WIPER HARNESS	-7701
			8BF2-63-620B	1	W/ WIPER HARNESS	7701-
	63 865	COVER 'A' (L), FRAME-GLASS HATCH	FB01-63-865A	1		
	63 866	COVER 'B' (L), FRAME-GLASS HATCH	FB01-63-866B	1		
	63 912	WELT (L), SEAMING-GLASS HATCH	FB01-63-912C	1	W/O RR. WIPER	
			FB02-63-912B	1	W/ RR. WIPER	
	67 051F	CLIP	FB01-67-051	1		
	76 448A	CLIP	G030-76-448	2		

7701 FC33* -550169

6300A-1 WINDOW GLASSES

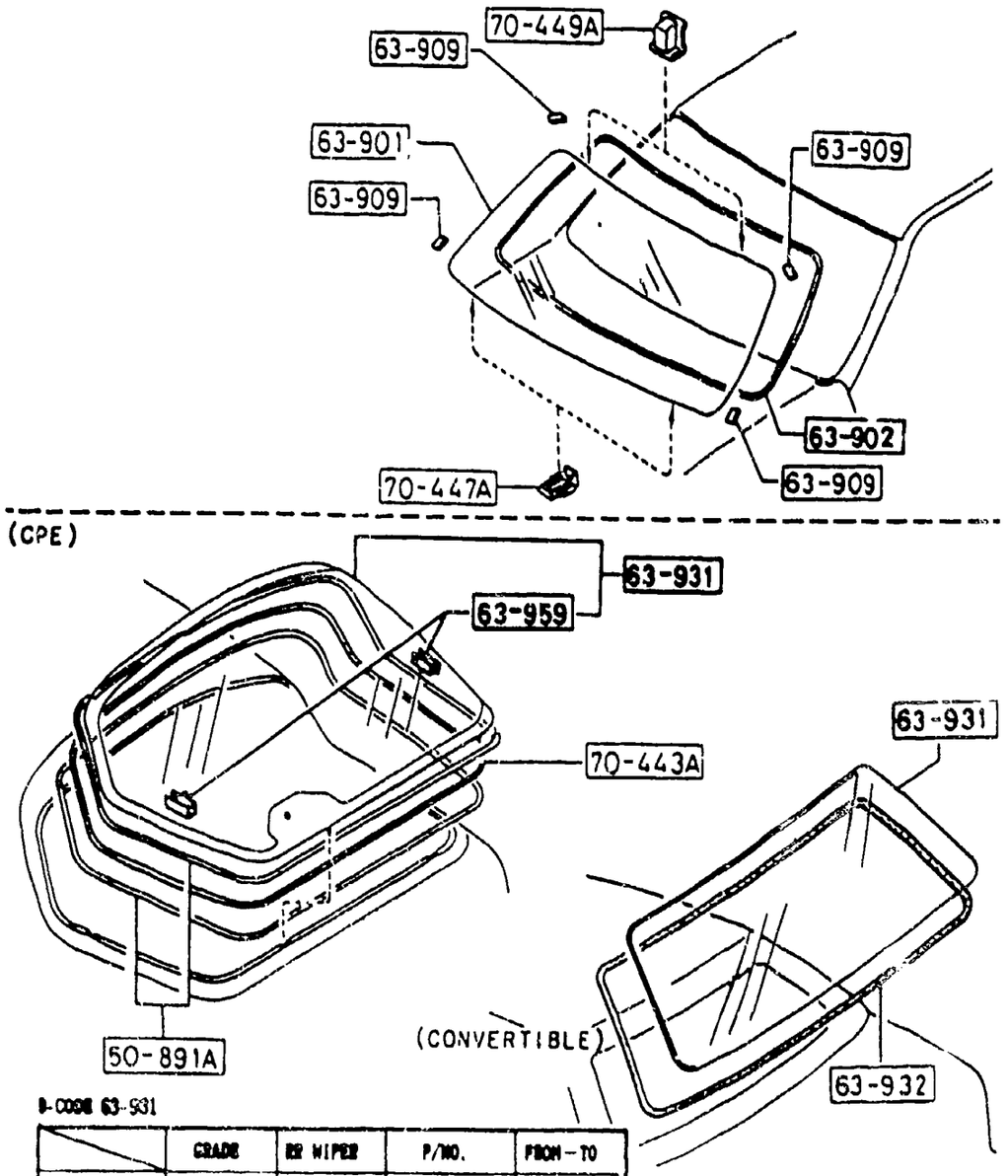

B-CODE 63-931

	GRADE	RR WIPER	P/NO.	FROM – TO
COUPE	CAN-GX SPORT-PKG USA-SE USA-GTU STD	–	FB03-63-931B	– 5901
			FB01-63-931D	5901 – 6116
			FB01-63-931E	6116 – 7701
			FB01-63-930	7701 –
	GXL TURBO	×	FB04-63-931B	– 5901
			FB02-63-931D	5901 – 6116
			FB02-63-931E	6116 – 7701
			FB02-63-930	7701 –
	10TH-ANNIV	×	FB57-63-930	–
CONVERTIBLE		×	FB67-63-931A	–

ITEM NO.	D-CODE	DESCRIPTION	PART NO	QTY	MODEL/DESCRIPTION	REMARKS
	50 891A	SPACER, WINDOW	FB01-50-891	2	COUPE	
	63 901	GLASS, WINDSHIELD	FB02-63-901E		BLUE, W/O SUNSHIELD, W/ RADIO ANTENNA COUPE	
			FB01-63-901C		BLUE, W/O SUNSHIELD, W/O RADIO ANTENNA COUPE	
			FB03-63-901E		BLUE, W/ SUNSHIELD, W/ RADIO ANTENNA TURBO, CONV.	
	63 902	DAM, FRT WINDSHIELD GLASS	FB01-50-895A	1		
	63 909	SPACER	8182-63-903	2		5822-5A01
				4		5A01-
	63 931	GLASS, BACK WINDOW	FB67-63-931A	1	CONV.	
			FB01-63-931E	1	W/O RR. WIPER COUPE	
			FB02-63-931E	1	W/ RR. WIPER COUPE	
	63 932	WEATHERSTRIP, RR. WINDOW	FB67-63-932B	1	CONV.	
	70 443A	DAM, RR. WINDOW GLASS	FB01-50-896	1	COUPE	
	70 447A	SPACER 'A'	FB01-50-893	2		
	70 449A	SPACER 'C'	FB01-50-897	2		

5822 FC33* -100361
5A01 FC33* 107570

SECTION INDEX -- BODY

STARTING LOCATION	SECT NO	SECTION NAME
2 - C 3	0900A	KEY SETS
2 - E 3	5000	FRONT BUMPER
2 - F 3	5005	RADIATOR GRILLE
2 - G 3	5010A	REAR BUMPER
2 - H 3	5030A	WINDOW MOULDINGS
2 - I 3	5040A	BODY MOULDINGS
2 - J 3	5060A	SIDE PROTECTORS
2 - K 3	5100	HEAD LAMPS
2 - L 3	5103	HEAD LAMP RETRACTORS
2 - M 3	5105	FRONT COMBINATION LAMPS
2 - C 4	5110A	REAR COMBINATION LAMPS
2 - E 4	5120	LICENSE LAMPS
2 - F 4	5125	INTERIOR LAMPS
2 - G 4	5130	OVERHEAD CONSOLE (COUPE)
2 - H 4	5170	ORNAMENTS
2 - I 4	5180	COWL & EXTRACTOR GILLES
2 - K 4	5230	HOOD
2 - L 4	5260	TRUNK LID (CONVERTIBLE)
2 - M 4	5310	BODY PANELS (FRONT) (COUPE)
2 - N 4	5310A	BODY PANELS (FRONT) (CONVERTIBLE)
2 - C 5	5320	BODY PANELS (FENDER & WHEEL APRON) (COUPE)
2 - D 5	5320B	BODY PANELS (FENDER & WHEEL APRON) (CONVERTIBLE)
2 - E 5	5330	BODY PANELS (DASH & COWL PANEL)
2 - F 5	5340A	BODY PANELS (SIDE) (COUPE)
2 - H 5	5340AA	BODY PANELS (SIDE) (CONVERTIBLE)
2 - K 5	5360A	BODY PANELS (ROOF) (COUPE)
2 - L 5	5370	BODY PANELS (FLOOR) (COUPE)
2 - M 5	5370A	BODY PANELS (FLOOR) (CONVERTIBLE)
2 - C 6	5390	FLOOR ATTACHMENTS (COUPE)
2 - E 6	5390A	FLOOR ATTACHMENTS (CONVERTIBLE)
2 - G 6	5500	DASHBOARD EQUIPMENTS (COUPE) (W O ANTI LOCK BRAKE SYSTEM)
2 - I 6	5500A	DASHBOARD EQUIPMENTS (COUPE) (ANTI-LOCK BRAKE SYSTEM)
2 - J 6	5500B	DASHBOARD EQUIPMENTS (CONVERTIBLE)
2 - K 6	5520	METER HOOD
2 - L 6	5530	SPEEDOMETER CABLE
2 - M 6	5540	METER COMPONENTS (COUPE) (W O ANTI-LOCK BRAKE SYSTEM)
2 - C 7	5540A	METER COMPONENTS (COUPE) (ANTI-LOCK BRAKE SYSTEM)
2 - E 7	5540B	METER COMPONENTS (CONVERTIBLE)
2 - F 7	5560	DASHBOARD & RELATED PARTS
2 - I 7	5570	CONSOLE
2 - K 7	5580	VENTILATOR
2 - C 8	5700A	FRONT SEATS (COUPE)
2 - C 9	5700AA	FRONT SEATS (COUPE) (LEATHER)
2 - C10	5700AB	FRONT SEATS (CONVERTIBLE) (CLOTH)
2 - F10	5700AC	FRONT SEATS (CONVERTIBLE) (LEATHER)
2 - J10	5750A	REAR SEATS (CLOTH)
2 - C11	5750AA	REAR SEATS (LEATHER)
2 - H11	5790A	SEAT BELTS
2 - J11	5800A	FRONT DOORS (COUPE)
2 - K11	5800AA	FRONT DOORS (CONVERTIBLE)
2 - C12	5830A	FRONT DOOR MECHANISMS (COUPE)
2 - H12	5830AA	FRONT DOOR MECHANISMS (CONVERTIBLE)
2 - C13	5840A	FRONT DOOR TRIMS & RELATED PARTS (COUPE)
2 - K13	5840AB	FRONT DOOR TRIMS & RELATED PARTS (CONVERTIBLE)
2 N13	6100	HEATER
2 - C14	6110	HEATER UNIT COMPONENTS
2 - D14	6115	HEATER CONTROLS COMPONENTS
2 - E14	6120	HEATER BLOWER COMPONENTS
2 - F14	6130	AIR CONDITIONER (W O AIR CONDITIONER)
2 - G14	6132A	CONDENSER PACKAGE
2 - I14	6142A	COMPRESSOR MOUNTING KIT, COMPRESSOR CLUTCH ASSEMBLY & REPAIR PARTS
2 - J14	6152A	EVAPORATOR PACKAGE
2 - K14	6200	LIFT GATE
2 - L14	6230	LIFT GATE MECHANISMS (COUPE)
2 - N14	6300A	WINDOW GLASSES
2 - C15	6330	SUNROOF (COUPE)
2 - E15	6330A	SOFT TOP (CONVERTIBLE)
2 - G15	6600B	SWITCHES & RELAYS (ENGINE) (W O TURBO)
2 - J15	6600BA	SWITCHES & RELAYS (ENGINE) (TURBO)
2 - M15	6610	DASHBOARD SWITCHES (MANUAL OPERATING)
2 - N15	6611	COMBINATION SWITCH
2 - C16	6612	CLUSTER SWITCH
2 - D16	6615	POWER WINDOW SWITCHES
2 - E16	6620	DOOR SWITCH
2 - F16	6630	RELAYS & CPL (BODY)
2 - G16	6635	HORNS
2 - H16	6640	AUTO CRUISE CONTROL SYSTEM
2 - I16	6680	AUDIO SYSTEMS (RADIO & TAPE DECK)

6330-1 SUNROOF (COUPE)

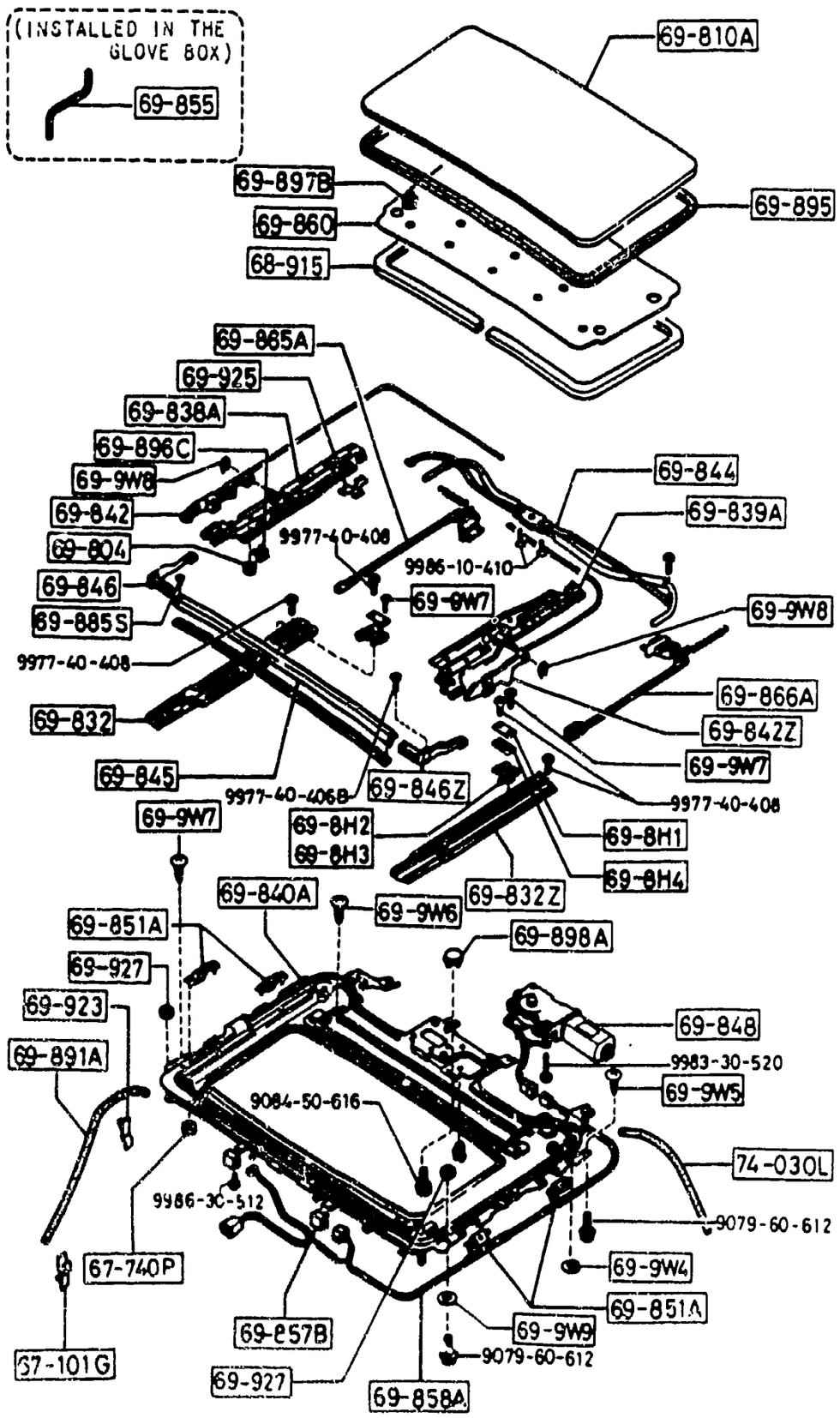

ITEM NO.	D-CODE	DESCRIPTION	PART NO.	QTY	MODEL/DESCRIPTION	REMARKS
	67 101G	CLIP, DRAIN HOSE-FRONT	FB01-67-101	4		-5903
			FB03-69-928	4		5903-
	67 740P	RELAY, SUNROOF	FB03-69-873	1		6901-
	68 915	WELT, SEAMING	FB03-69-915A	1		
		DARK GRAY	07			
		RED	10			
		BLUE	48			
	69 804	NUT, PANEL-SUNROOF	FB03-69-804	6		-6601
	69 810A	PANEL, SUNROOF	FB03-69-810H	1		
	69 832	RAIL (R), GUIDE	FB03-69-832A	1		
	69 832Z	RAIL (L), GUIDE	FB03-69-833A	1		
	69 838A	PANEL (R), LOWER	FB03-69-838C	1		
	69 839A	PANEL (L), LOWER	FB03-69-839C	1		
	69 840A	FRAME, SLIDING SUNROOF ROOF	FB03-69-831J	1		
	69 842	GUIDE (R), REAR	FB03-69-842A	1		
	69 842Z	GUIDE (L), REAR	FB03-69-843A	1		
	69 844	BRACKET, DRIVE UNIT	FB03-69-844A	1		
	69 845	DEFLECTOR	FB03-69-845	1		
	69 846	LINK (R), DEFLECTOR	FB03-69-846B	1		
	69 846Z	LINK (L), DEFLECTOR	FB03-69-847B	1		
	69 848	MOTOR, SUNROOF	FB03-69-848A	1		
	69 851A	BRACKET, SET-SUNROOF FRAME	FB03-69-849	4		
	69 855	HANDLE, SUNROOF	FB03-69-982	1		
	69 857B	RELAY, SUNROOF	FB03-69-857	1		-6901
			FB03-69-857A	1		6901-
	69 858A	HARNESS SUNROOF	FB03-69-858	1		
	69 860	TRIM, SUNROOF	FB03-69-860C	1		
		DARK GRAY	07			
		RED	10			
		BLUE	48			
	69 865A	SHUTTING (R), SUNROOF	FB03-69-865	1		
	69 866A	SHUTTING (L), SLIDING ROOF	FB03-69-866	1		
	69 885S	CLIP, DEFLECTOR LINK	FB03-69-885	2		
	69 891A	HOSE, DRAIN-SUNROOF FRONT	FB03-69-891A	2		
	69 895	WEATHERSTRIP, SUNROOF	FB03-69-895B	1		
	69 896C	SHIM, LOWER PANEL FRONT	FB03-69-896A	2		-5B01
				6		5B01-
	69 897B	FASTENER, TRIM-SUNROOF	FB03-69-897	8		
	69 898A	COVER, MOTOR-SUNROOF	FB03-69-898	1		
		DARK GRAY	07			
		RED	10			

5903	FC33*	-102271
5B01	FC33*	-113629
6601	FC33*	-152302
6901	FC33*	-512255

6330-2 SUNROOF (COUPE)

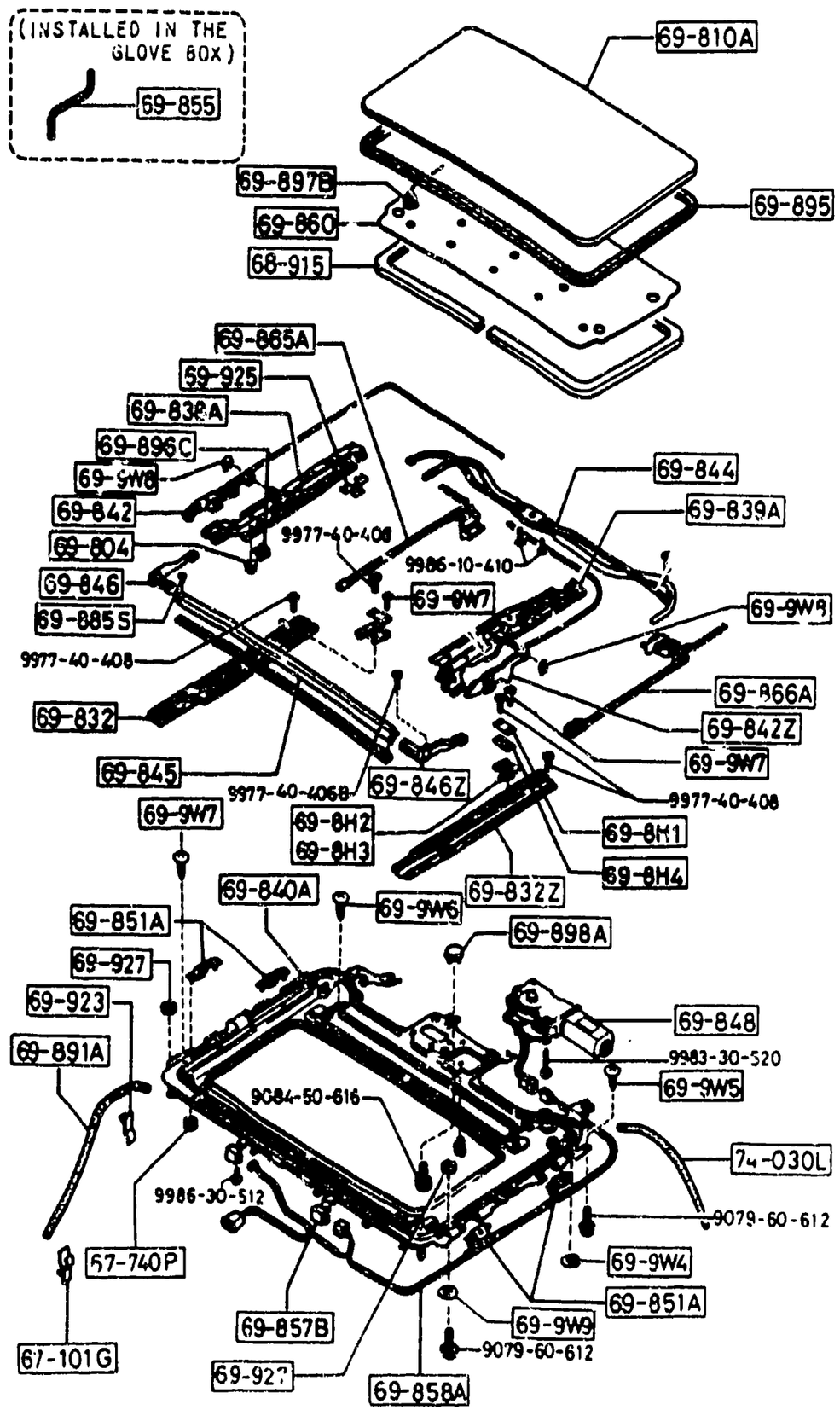

ITEM NO.	D-CODE	DESCRIPTION	PART NO.	QTY	MODEL/DESCRIPTION	REMARKS
	69 898A (CONT'D)	BLUE	48			
	69 923	CLIP, DRAIN HOSE-SUNROOF	FB03-69-923	2		
	69 925	SHIM, LOWER PANEL-REAR	FB03-69-925A	2		5A01-5B01
				4		5B01-
	69 927	NUT, ADJUST-SUNROOF FRAME	FB03-69-927	4		
	69 9W4	RING 'A', SNAP-LOWER UNIT	FB03-69-9W4	4		6901-
	69 9W5	SCREW, TAPPING-LOWER UNIT	FB03-69-9W5	2		6901-
	69 9W6	SCREW 'A', LOWER UNIT-SUNROOF	FB03-69-9W6	4		6901-
	69 9W7	SCREW 'B', LOWER UNIT-SUNROOF	FB03-69-9W7	4		6901-
	69 9W8	RING 'B', SNAP-LOWER UNIT	FB03-69-9W8	2		6901-
	69 9W9	WASHER, LOWER UNIT-SUNROOF	FB03-69-9W9	8		6901-
	74 030L	HOSE, DRAIN-REAR	FB03-69-892A	2		

5A01	FC33*	-107570
5B01	FC33*	-113629
6901	FC33*	-51?255

6330A-1 SOFT TOP (CONVERTIBLE)

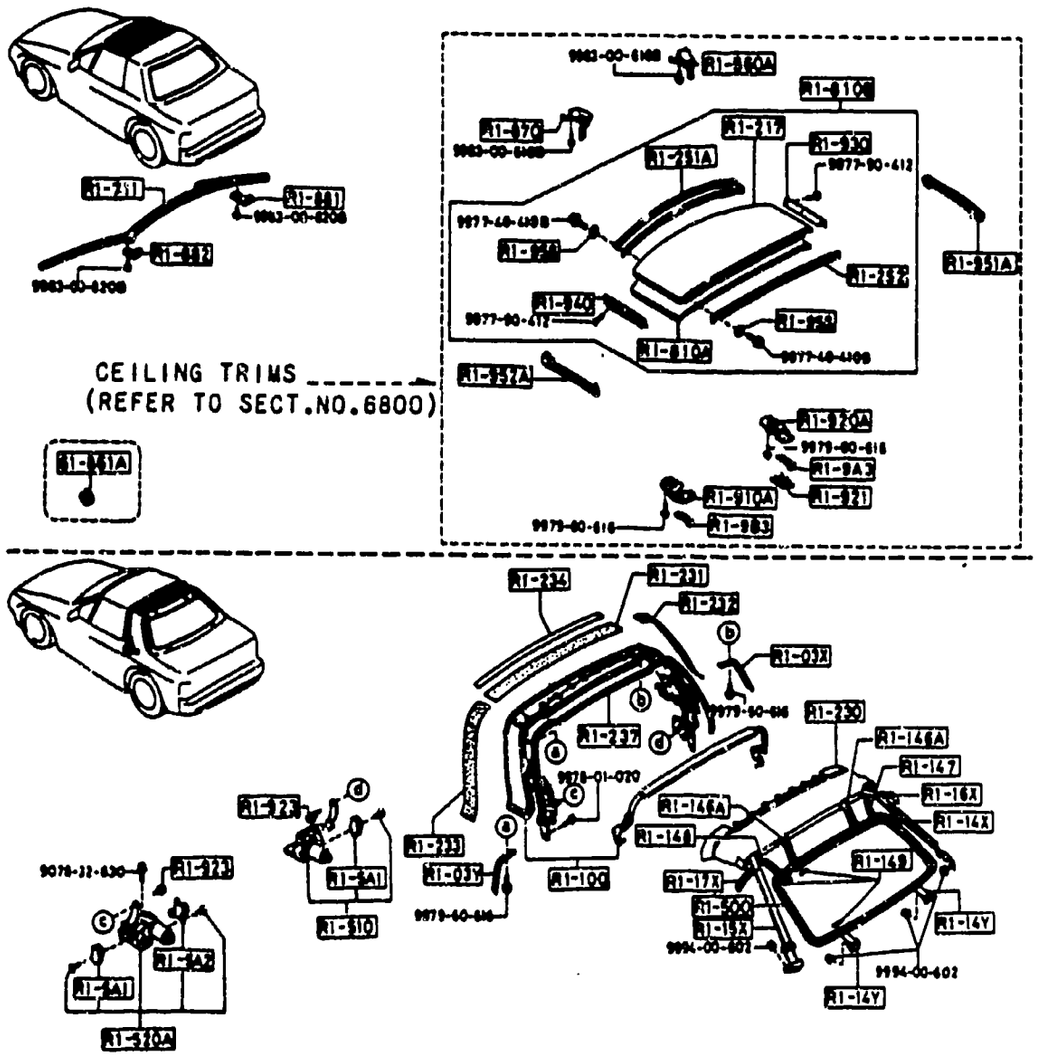

ITEM NO.	D-CODE	DESCRIPTION	PART NO.	QTY	MODEL/DESCRIPTION	REMARKS
	61 861A	GROMMET	SA94-61-861	2		
	68 885	FASTENER	UB54-68-885	17		
		BLACK	00			
		DARK GRAY	07			
		BLUE	48			
	R1 01Y	BAR (FRT.), FORMING-SOFT TOP	FB67-R1-01YC	1		
	R1 110A	BAR (RR.), FORMING-SOFT TOP	FB67-R1-110A	1		
	R1 210A	HOOD, OUTER SOFT TOP	FC23-R1-210	1		
	R1 217	CLOTH, ROOF PANEL	FB67-R1-217B	1		
	R1 218	BOLT, HOOD OUTER	FB67-R1-218	2		
	R1 219	NUT, HOOD OUTER	FB67-R1-219	2		
	R1 220	CEILING, TOP-HOOD	FB67-P1-212A	1		
		DARK GRAY	07			
		BLUE	48			
	R1 230	INSULATOR TOP CEILING	FB67-R1-213	1		
	R1 240	PLATE, SET-HOOD REAR	FB67-R1-214A	1		
	R1 500	FRAME, BACK WINDOW	FB67-R1-421A	1		
	R1 510	MOTOR (R), TOP	FB67-R1-510D	1		
	R1 520A	MOTOR (L), TOP	FB67-R1-520B	1		
	R1 711	WEATHERSTRIP, FRONT HEADER	FB67-R1-711A	1		
	R1 721	WEATHERSTRIP, HOMING BAR-FRONT	FB67-R1-721E	1		
	R1 810A	PANEL, ROOF-SOFT TOP	FB67-R1-810H	1		
	R1 860A	LOCK (R), TOP	FB67-R1-860D	1		
	R1 860B	BOOT, TOP	FB67-R1-960C	1		
		GRAY-RED	07			
		BLUE	48			
	R1 870	LOCK (L), TOP	FB67-R1-870D	1		
	R1 881	STRIKER (R), LOCK-TOP	FB67-R1-881C	1		
	R1 882	STRIKER (L), LOCK-TOP	FB67-R1-882C	1		
	R1 910A	LOCK (R), HINGE-TOP	FB67-R1-910C	1		
		DARK GRAY	07			
		BLUE	48			
	R1 911	RETAINER (C), FORMING BAR	FB67-R1-911A	1		
	R1 912	RETAINER (R), FORMING BAR	FB67-R1 912A	1		
	R1 913	RETAINER (L), FORMING BAR	FB67-R1-913A	1		
	R1 914	HOOK 'A', HOOD	FB67-R1-91YC	8		
	R1 915	HOOK 'B', HOOD	FB67-R1-91ZC	5		
	R1 920A	LOCK (L), HINGE-TOP	FB67-R1-920C	1		
		DARK GRAY	07			
		BLUE	48			
	R1 921	COVER, KNOB-HINGE	FB67-R1-921A	1		

6330A-2 SOFT TOP (CONVERTIBLE)

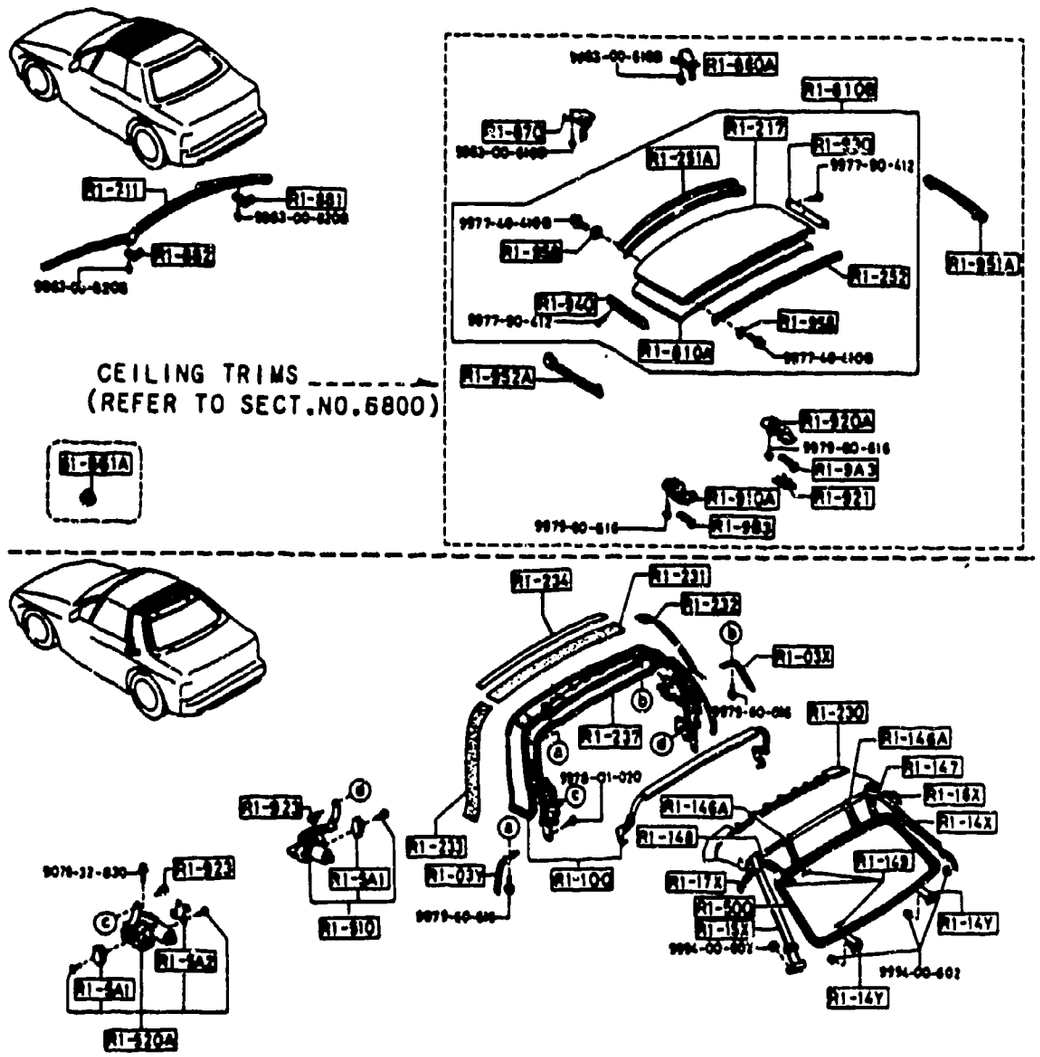

ITEM NO.	D-CODE	DESCRIPTION	PART NO.	QTY	MODEL/DESCRIPTION	REMARKS
	R1 921 (CONT'D)	DARK GRAY	07			
		BLUE	48			
	R1 923	BOLT, JOINT-MOTOR LINK	FB67-R1-923	2		
	R1 926	WASHER, HOOK-HOOD COVER	FB67-R1-926	13		
	R1 930	RETAINER (R), ROOF PANEL	FB67-R1-930A	1		
	R1 940	RETAINER (L), ROOF PANEL	FB67-R1-940A	1		
	R1 951A	WEATHERSTRIP (R), ROOF PANEL	FC54-R1-951B	1		
	R1 952A	WEATHERSTRIP (L), ROOF PANEL	FC54-R1-952B	1		

SWITCHES & RELAYS (ENGINE) (W/O TURBO)

(THIS ILLUSTRATION CONSISTS OF 2 PAGES)

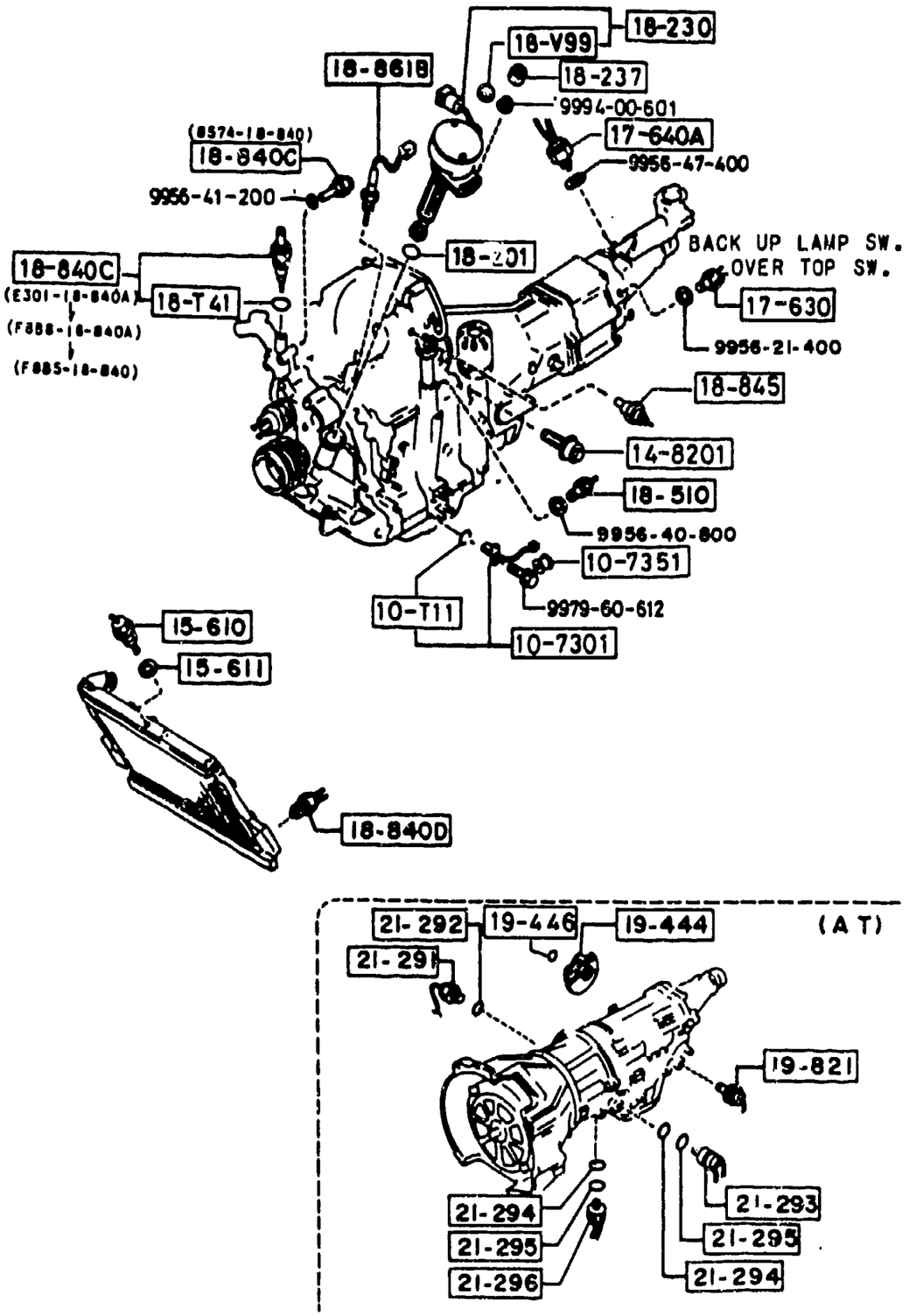

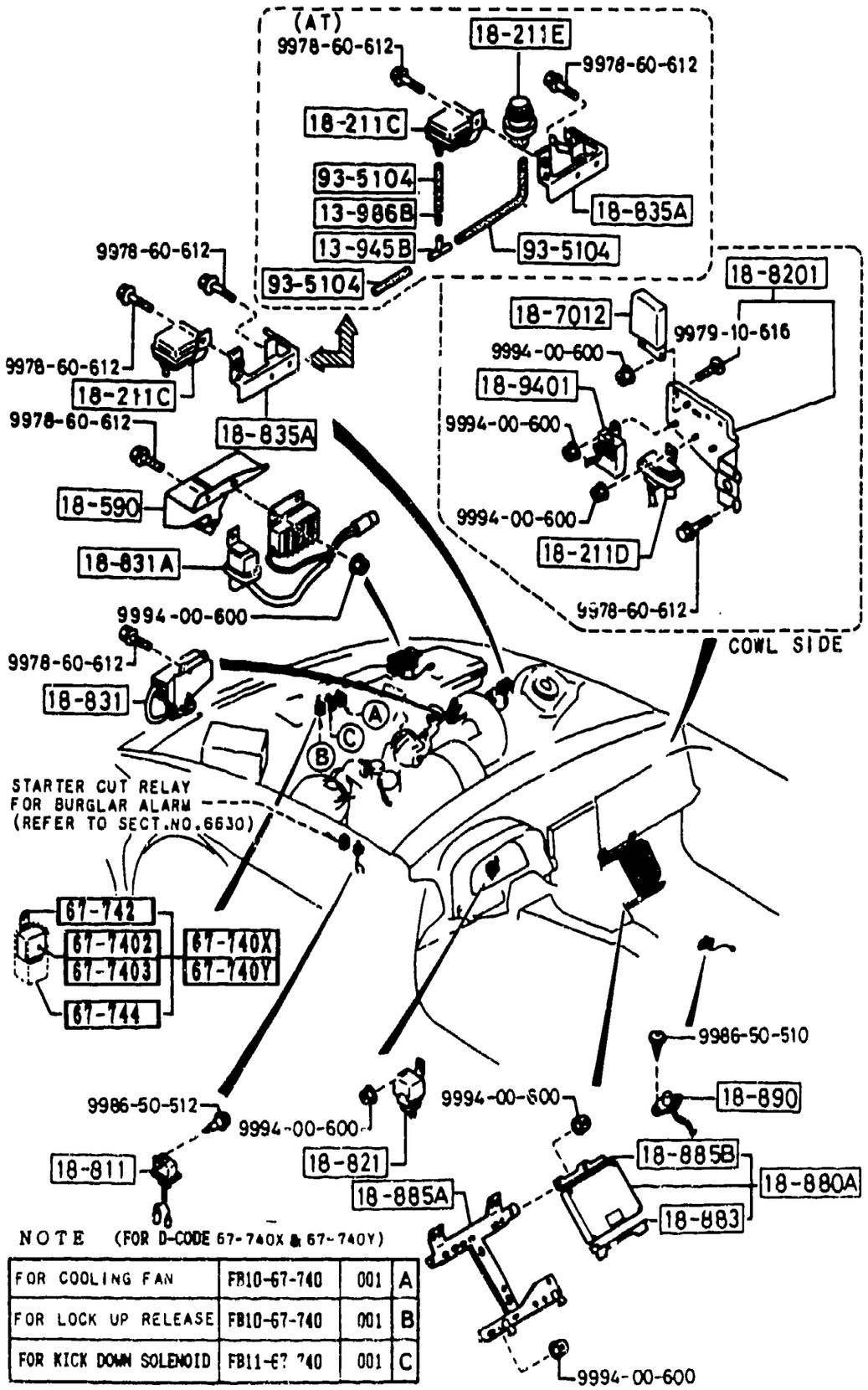

NOTE (FOR D-CODE 67-740X & 67-740Y)

FOR COOLING FAN	FB10-67-740	001	A
FOR LOCK UP RELEASE	FB10-67-740	001	B
FOR KICK DOWN SOLENOID	FB11-67-740	001	C

6600B-2 SWITCHES & RELAYS (ENGINE) (W/O TURBO)

SEE ILLUSTRATION/S AT FRAME 2 - G15

ITEM NO.	D-CODE	DESCRIPTION	PART NO.	QTY	MODEL/DESCRIPTION	REMARKS
	10 7301	SENSOR, OIL LEVEL	N326-10-470	1		
	10 7351	PROTECTOR	N231-10-735	1		
	10 T11	O-RING-OIL LEVEL SENSOR	N326-10-T11	1		
	13 945B	CONNECTOR	1700-13-945A	1	A/T	
	13 986B	ORIFICE	8931-13-986	1	D=0.5 BLACK	
	14 8201	GAUGE UNIT, OIL PRESSURE	N201-14-820	1		
	15 610	SENSOR, WATER LEVEL	8553-15-610B	1		-6620
			N326-15-610	1		6620-
	15 611	GASKET	8553-15-611	1		
	17 630	SWITCH	8130-17-640C	1	M/T	
	17 640A	SWITCH, NEUTRAL	M502-17-640A	1	M/T	
	18 211C	SENSOR, BOOST	N327-18-211	1		
	18 211D	SENSOR, BOOST	N326-18-211	1		
	18 211E	SWITCH, BOOST	N320-18-211	1	A/T	
	18 230	SENSOR, CRANK ANGLE	N326-18-230	1		
	18 237	CAP, CRANK ANGLE SENSOR	N326-18-237	1		
	18 510	UNIT, HEAT GAUGE	8569-18-510A	1		
	18 590	BRACKET, RESISTOR	N320-18-835	1		
	18 630	SWITCH, WATER THERMO	E301-18-840A	1	A/T	
	18 7012	UNIT, CONTROL	N327-18-780A	1	A/T	
	18 811	RELAY, MAIN	N326-18-811B	1		
	18 8201	BRACKET, CONTROL UNIT	N326-18-945C	1		
	18 821	RELAY, CIRCUIT OPEN	N326-18-821A	1		
	18 831	RESISTOR	HE21-18-831	1		-7601
	18 831A	RESISTOR, SOLENOID-FUEL PUMP	N319-18-831	1		
	18 835A	BRACKET	N319-18-835A	1	A/T	
			N322-18-835A	1	M/T	
	18 840C	SENSOR, WATER TEMPERATURE	8574-18-840	1		
	18 840D	SWITCH, WATER THERMO	FE85-18-840	1		
	18 845	SENSOR, AIR TEMPERATURE	N326-18-845	1		
	18 861B	SENSOR, OXYGEN	N326-18-861	1		
	18 880A	CONTROL UNIT, E.G.I.	N338-18-880R	1	CONV.	
		REFER TO SERV. BULL. NO. 049/88, CAT. 4 FOR MORE INFO.				
			N3Y6-18-881R	1	COUPE	-7601
			N327-18-881R	1	COUPE	7601-
	18 883	BRACKET, CONTROL UNIT	N326-18-883	1		
	18 885A	BRACKET, CONTROL UNIT	N326-18-885	1		-7204
			N326-18-885A	1		7204-
	18 885B	BRACKET, CONTROL UNIT	HE21-18-885A	1		
	18 890	SWITCH, THERMO	N326-18-890A	1		

6620 FC33* -156850
7204 FC33* -533083
7601 FC33* -550168

6600B-3 SWITCHES & RELAYS (ENGINE) (W/O TURBO)

SEE ILLUSTRATION/S AT FRAME 2 - G15

ITEM NO.	D-CODE	DESCRIPTION	PART NO.	QTY	MODEL/DESCRIPTION	REMARKS
	18 9401	CONTROL UNIT	N326-18-941	1	A/T	
	18 T41	O-RING-WATER THERMO SWITCH	E301-18-T41	1	A/T	
	18 V99	CAP, BLIND-CRANK ANGLE SENSOR	N326-18-V99	1		5C05-
	19 444	SWITCH, INHIBITOR	BU17-19-444A	1	A/T	
	19 446	O-RING	0338-19-446	1	A/T	
	19 821	SOLENOID, DOWN SHIFT	BU17-19-821	1	A/T	
	21 291	SWITCH, OIL PRESSURE	BU17-21-291A	1		
	21 292	O-RING	BU01-21-292	1	A/T	
	21 293	SOLENOID, OVER DRIVE	BU01-21-293A	1	A/T	
	21 294	O-RING	BU01-21-294	2	A/T	
	21 295	O-RING	BU01-21-295	2	A/T	
	21 296	SOLENOID, LOCK-UP CONTROL	BU17-21-296A	1	A/T	
	67 7402	RELAY, N.C.	FB25-67-740	2	10A, A/T	
	67 740X	RELAY & COVER, NORMAL CLOSE	FB10-67-740	2	10A, A/T	
	67 740Y	RELAY & COVER, NORMAL OPEN	FB11-67-740	1	30A, A/T	
	67 742	BRACKET, RELAY	FB10-67-742	3	A/T	
	67 744	BOOT, RELAY-WATER PROOF	FB10-67-744	3	A/T	
	93 5104	HOSE	9935-10-4999	1		
	99 560	GASKET	9956-41-200	1		

5C05 FC33* -119333

(THIS ILLUSTRATION CONSISTS OF 2 PAGES)

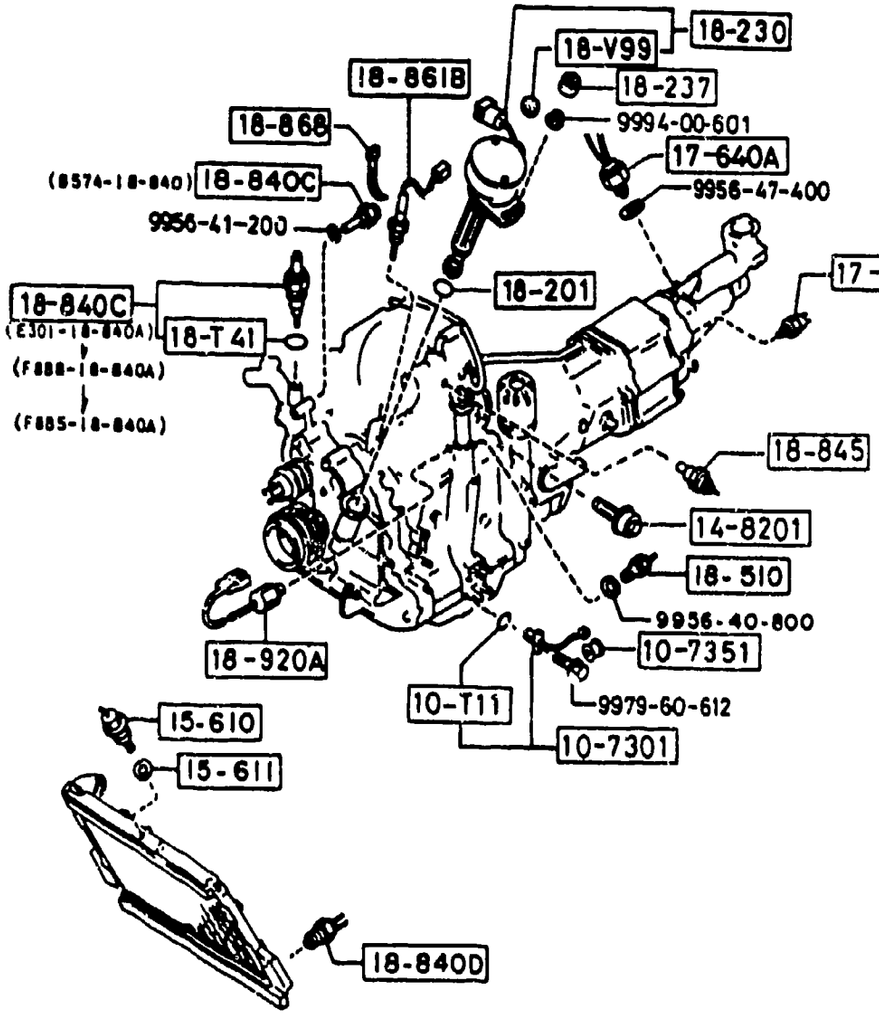

(THIS ILLUSTRATION CONSISTS OF 2 PAGES)

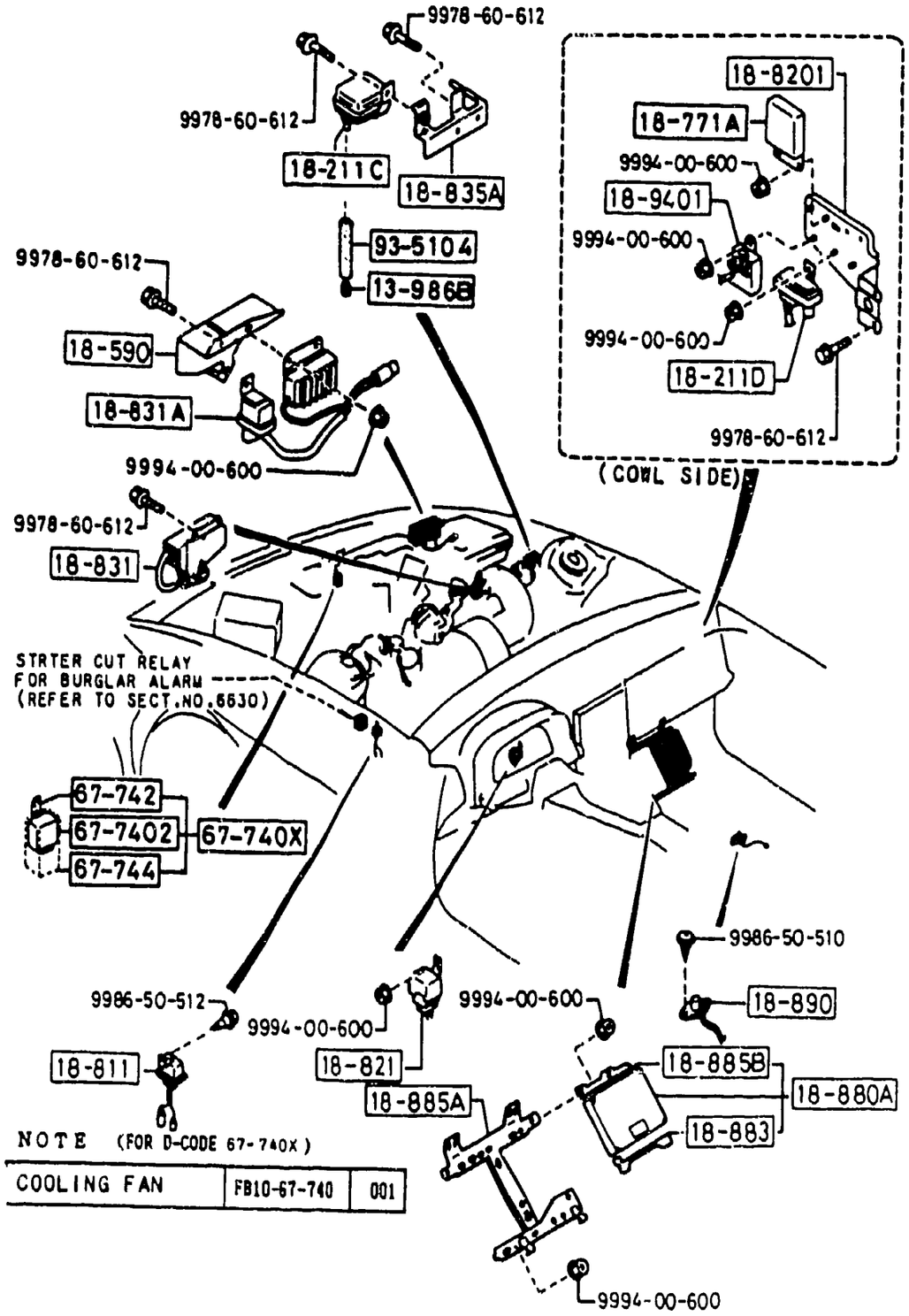

NOTE (FOR D-CODE 67-740X)

COOLING FAN	FB10-67-740	001

6600BA-2 SWITCHES & RELAYS (ENGINE) (TURBO)

SEE ILLUSTRATION/S AT FRAME 2 - J15

ITEM NO.	D-CODE	DESCRIPTION	PART NO.	QTY	MODEL/DESCRIPTION	REMARKS
	10 7301	SENSOR, OIL LEVEL	N326-10-470	1		
	10 7351	PROTECTOR	N231-10-735	1		
	10 T11	O-RING-OIL LEVEL SENSOR	N326-10-T11	1		
	13 986B	ORIFICE	8931-13-986	1	D=0.5 BLACK	
	14 8201	GAUGE UNIT, OIL PRESSURE	N201-14-820	1		
	15 610	SENSOR, WATER LEVEL	8553-15-610B	1		-6620
			N326-15-610	1		6620-
	15 611	GASKET	8553-15-611	1		
	17 640	SWITCH, BACK-UP LAMP	1281-17-640	1		
	17 640A	SWITCH, NEUTRAL	M502-17-640C	1		
	18 211C	SENSOR, BOOST	N318-18-211	1		
	18 211D	SENSOR, BOOST	N326-18-211	1		
	18 230	SENSOR, CRANK ANGLE	N326-18-230	1		
	18 237	CAP, CRANK ANGLE SENSOR	N326-18-237	1		
	18 510	UNIT, HEAT GAUGE	8569-18-510A	1		
	18 590	BRACKET, RESISTOR	N320-18-835	1		
	18 630	SWITCH, WATER THERMO	F8B8-18-840A	1		
	18 771A	CONTROL UNIT, KNOCK	N318-18-771A	1		
	18 811	RELAY, MAIN	N326-18-811B	1		
	18 8201	BRACKET, CONTROL UNIT	N326-18-945C	1		
	18 821	RELAY, CIRCUIT OPEN	N326-18-821A	1		
	18 831	RESISTOR	HE21-18-831	1		-7601
	18 831A	RESISTOR, SOLENOID-FUEL PUMP	N319-18-831	1		
	18 835A	BRACKET	N322-18-835A	1		
	18 840C	SENSOR, WATER TEMPERATURE	8574-18-840	1		
	18 840D	SWITCH, WATER THERMO	FE85-18-840	1		
	18 845	SENSOR, AIR TEMPERATURE	N326-18-845	1		
	18 861B	SENSOR, OXYGEN	N326-18-861	1		
	18 868	BAND, CORD-OXYGEN SENSOR	N318-18-868	2		-6501
				1		6501-
	18 880A	CONTRO' UNIT, E.G.I.	N332-18-881R	1	REBUILT	-7601
		REFER TO SERV. BULL. NO. 049-88, CAT. 4 FOR MORE INFO.				
			N333-18-881R	1	REBUILT	7601-
	18 883	BRACKET, CONTROL UNIT	N326-18-883	1		
	18 885A	BRACKET, CONTROL UNI	N326-18-885	1		-7204
			N326-18-885A	1		7204-
	18 885B	BRACKET, CONTROL UNIT	HE21-18-885A	1		
	18 890	SWITCH, THERMO	N326-18-890A	1		
	18 920A	SENSOR, KNOCK	N318-18-921	1		
	18 9401	CONTROL UNIT	N326-18-941	1		

6501 FC33* -146093
6620 FC33* -156850
7204 FC33* -533083
7601 FC33* -550168

6600BA-3 SWITCHES & RELAYS (ENGINE) (TURBO)

ITEM NO.	D-CODE	DESCRIPTION	PART NO.	QTY	MODEL/DESCRIPTION	REMARKS
	18 T41	O-RING-WATER THERMO SWITCH	E301-18-T41	1		
	18 V99	CAP, BLIND-CRANK ANGLE SENSOR	N326-18-V99	1		
	67 7402	RELAY, N.C.	FB25-67-740	1	10A	
	67 740X	RELAY & COVER, NORMAL CLOSE	FB10-67-740	1	10A	
		<C>	FB25-67-740	1	10A, REQUIRES BRACKET - FB10-67-742 & BOOT - FB10-67-744	
	67 742	BRACKET, RELAY	FB10-67-742	1		
	67 744	BOOT, RELAY-WATER PROOF	FB10-67-744	1		
	93 5104	HOSE	9935-10-4999	1		
	99 560	GASKET	9956-41-200	1		

SEE ILLUSTRATION/S AT FRAME 2 · J15

6610-1 DASHBOARD SWITCHES (MANUAL OPERATING)

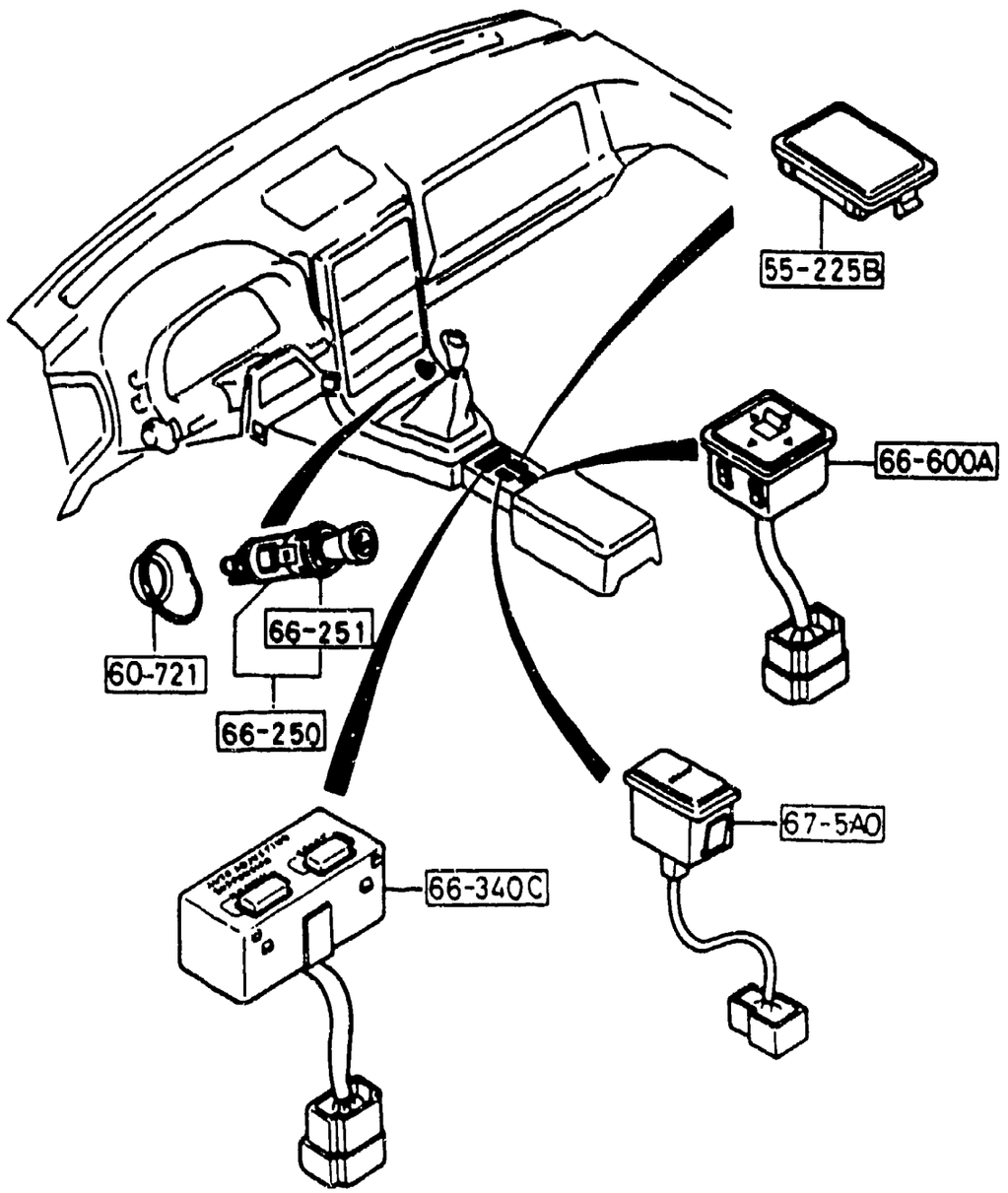

ITEM NO.	D-CODE	DESCRIPTION	PART NO.	QTY	MODEL/DESCRIPTION	REMARKS
	55 225B	COVER, HOLE	B001-55-225A	1		
	60 721	PROTECTOR	FB01-66-241	1		
	66 250	LIGHTER, CIGAR	FB01-66-250	1		
	66 251	RING, ILLUMINATION	UB40-66-251	1		7401-
	66 340C	SWITCH, ADJUSTABLE DAMPER	FB07-66-340	1	W. A.A.S.	
	66 600A	SWITCH, REMOTE CONTROL MIRROR	FB02-66-600A	1		
	67 5A0	DISPLAY, SECURITY-ALARM	FB01-67-5A0A	1	W BURGLAR ALARM	

7401 FC33* -543109

6611-1 COMBINATION SWITCH

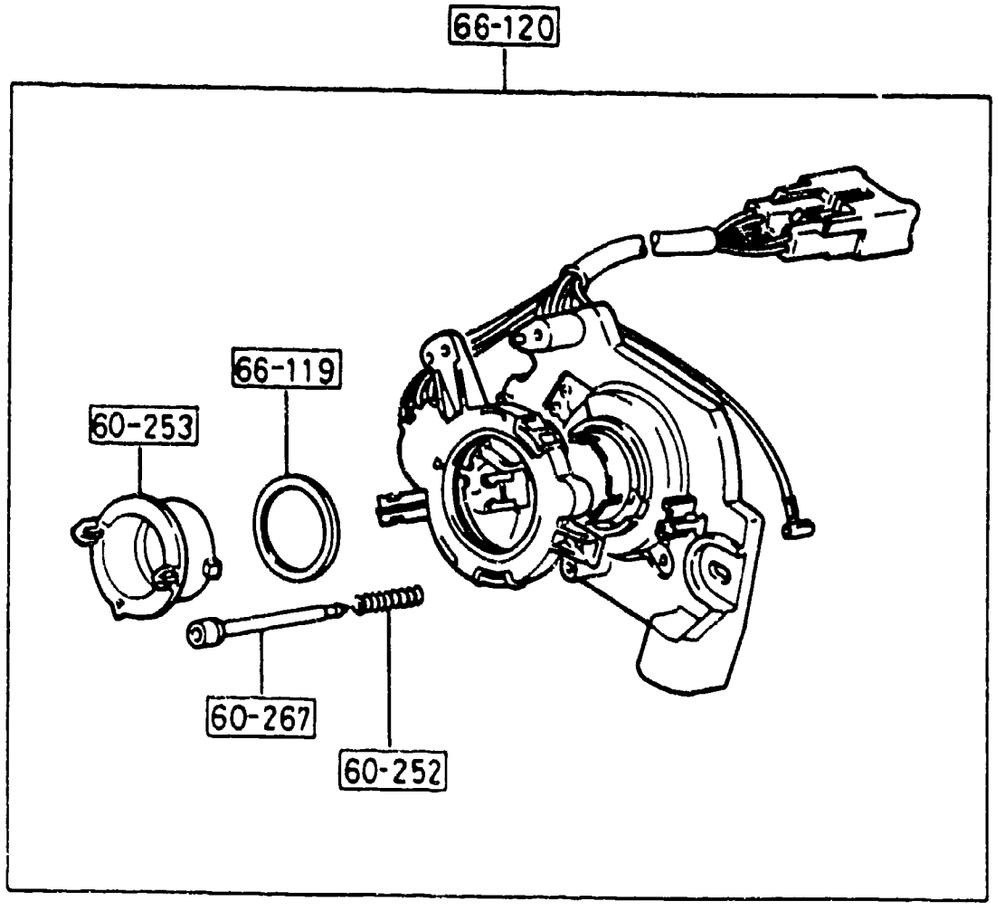

ITEM NO	D-CODE	DESCRIPTION	PART NO.	QTY	MODEL/DESCRIPTION	REMARKS
	60 252	SPRING	FB01-66-117	1		
	60 253	CAM, CANCEL	FB01-66-126	1		
	60 267	CONTACT, HORN	FB01-66-127	1		
	66 119	WASHER, CONTACT SPRING	FB01-66-119	1		
	66 120	SENSOR, TURN CANCEL	FB01-66-120	1	W/O P/S W/O A.A.S.	
			FB07-66-120	1	W/ P/S	

SECTION INDEX -- BODY

STARTING LOCATION	SECT NO	SECTION NAME
2 - C 3	0900A	KEY SETS
2 - E 3	5000	FRONT BUMPER
2 - F 3	5005	RADIATOR GRILLE
2 - G 3	5010A	REAR BUMPER
2 - H 3	5030A	WINDOW MOULDINGS
2 - I 3	5040A	BODY MOULDINGS
2 - J 3	5060A	SIDE PROTECTORS
2 - K 3	5100	HEAD LAMPS
2 - L 3	5103	HEAD LAMP RETRACTORS
2 - M 3	5105	FRONT COMBINATION LAMPS
2 - C 4	5110A	REAR COMBINATION LAMPS
2 - E 4	5120	LICENSE LAMPS
2 - F 4	5125	INTERIOR LAMPS
2 - G 4	5130	OVERHEAD CONSOLE (COUPE)
2 - H 4	5170	ORNAMENTS
2 - I 4	5180	COWL & EXTRACTOR GILLES
2 - K 4	5230	HOOD
2 - L 4	5260	TRUNK LID (CONVERTIBLE)
2 - M 4	5310	BODY PANELS (FRONT) (COUPE)
2 - N 4	5310A	BODY PANELS (FRONT) (CONVERTIBLE)
2 - C 5	5320	BODY PANELS (FENDER & WHEEL APRON) (COUPE)
2 - D 5	5320B	BODY PANELS (FENDER & WHEEL APRON) (CONVERTIBLE)
2 - E 5	5330	BODY PANELS (DASH & COWL PANEL)
2 - F 5	5340A	BODY PANELS (SIDE) (COUPE)
2 - H 5	5340AA	BODY PANELS (SIDE) (CONVERTIBLE)
2 - K 5	5360A	BODY PANELS (ROOF) (COUPE)
2 - L 5	5370	BODY PANELS (FLOOR) (COUPE)
2 - M 5	5370A	BODY PANELS (FLOOR) (CONVERTIBLE)
2 - C 6	5390	FLOOR ATTACHMENTS (COUPE)
2 - E 6	5390A	FLOOR ATTACHMENTS (CONVERTIBLE)
2 - G 6	5500	DASHBOARD EQUIPMENTS (COUPE) (W/O ANTI-LOCK BRAKE SYSTEM)
2 - I 6	5500A	DASHBOARD EQUIPMENTS (COUPE) (ANTI-LOCK BRAKE SYSTEM)
2 - J 6	5500B	DASHBOARD EQUIPMENTS (CONVERTIBLE)
2 - K 6	5520	METER HOOD
2 - L 6	5530	SPEEDOMETER CABLE
2 - M 6	5540	METER COMPONENTS (COUPE) (W/O ANTI-LOCK BRAKE SYSTEM)
2 - C 7	5540A	METER COMPONENTS (COUPE) (ANTI-LOCK BRAKE SYSTEM)
2 - E 7	5540B	METER COMPONENTS (CONVERTIBLE)
2 - F 7	5560	DASHBOARD & RELATED PARTS
2 - I 7	5570	CONSOLE
2 - K 7	5580	VENTILATOR
2 - C 8	5700A	FRONT SEATS (COUPE)
2 - C 9	5700AA	FRONT SEATS (COUPE) (LEATHER)
2 - C10	5700AB	FRONT SEATS (CONVERTIBLE) (CLOTH)
2 - F10	5700AC	FRONT SEATS (CONVERTIBLE) (LEATHER)
2 - J10	5750A	REAR SEATS (CLOTH)
2 - C11	5750AA	REAR SEATS (LEATHER)
2 - H11	5790A	SEAT BELTS
2 - J11	5800A	FRONT DOORS (COUPE)
2 - K11	5800AA	FRONT DOORS (CONVERTIBLE)
2 - C12	5830A	FRONT DOOR MECHANISMS (COUPE)
2 - H12	5830AA	FRONT DOOR MECHANISMS (CONVERTIBLE)
2 - C13	5840A	FRONT DOOR TRIMS & RELATED PARTS (COUPE)
2 - K13	5840AB	FRONT DOOR TRIMS & RELATED PARTS (CONVERTIBLE)
2 - N13	6100	HEATER
2 - C14	6110	HEATER UNIT COMPONENTS
2 - D14	6115	HEATER CONTROLS COMPONENTS
2 - E14	6120	HEATER BLOWER COMPONENTS
2 - F14	6130	AIR CONDITIONER (W/O AIR CONDITIONER)
2 - G14	6132A	CONDENSER PACKAGE
2 - I14	6142A	COMPRESSOR MOUNTING KIT COMPRESSOR CLUTCH ASSEMBLY & REPAIR PARTS
2 - J14	6152A	EVAPORATOR PACKAGE
2 - K14	6200	LIFT GATE
2 - L14	6230	LIFT GATE MECHANISMS (COUPE)
2 - N14	6300A	WINDOW GLASSES
2 - C15	6330	SUNROOF (COUPE)
2 - E15	6330A	SOFT TOP (CONVERTIBLE)
2 - G15	6600B	SWITCHES & RELAYS (ENGINE) (W/O TURBO)
2 - J15	6600BA	SWITCHES & RELAYS (ENGINE) (TURBO)
2 - M15	6610	DASHBOARD SWITCHES (MANUAL OPERATING)
2 - N15	6611	COMBINATION SWITCH
2 - C16	6612	CLUSTER SWITCH
2 - D16	6615	POWER WINDOW SWITCHES
2 - E16	6620	DOOR SWITCH
2 - F16	6630	RELAYS & CPU (BODY)
2 - G16	6635	HORNS
2 - H16	6640	AUTO CRUISE CONTROL SYSTEM
2 - I16	6680	AUDIO SYSTEMS (RADIO & TAPE DECK)

6612-1 CLUSTER SWITCH

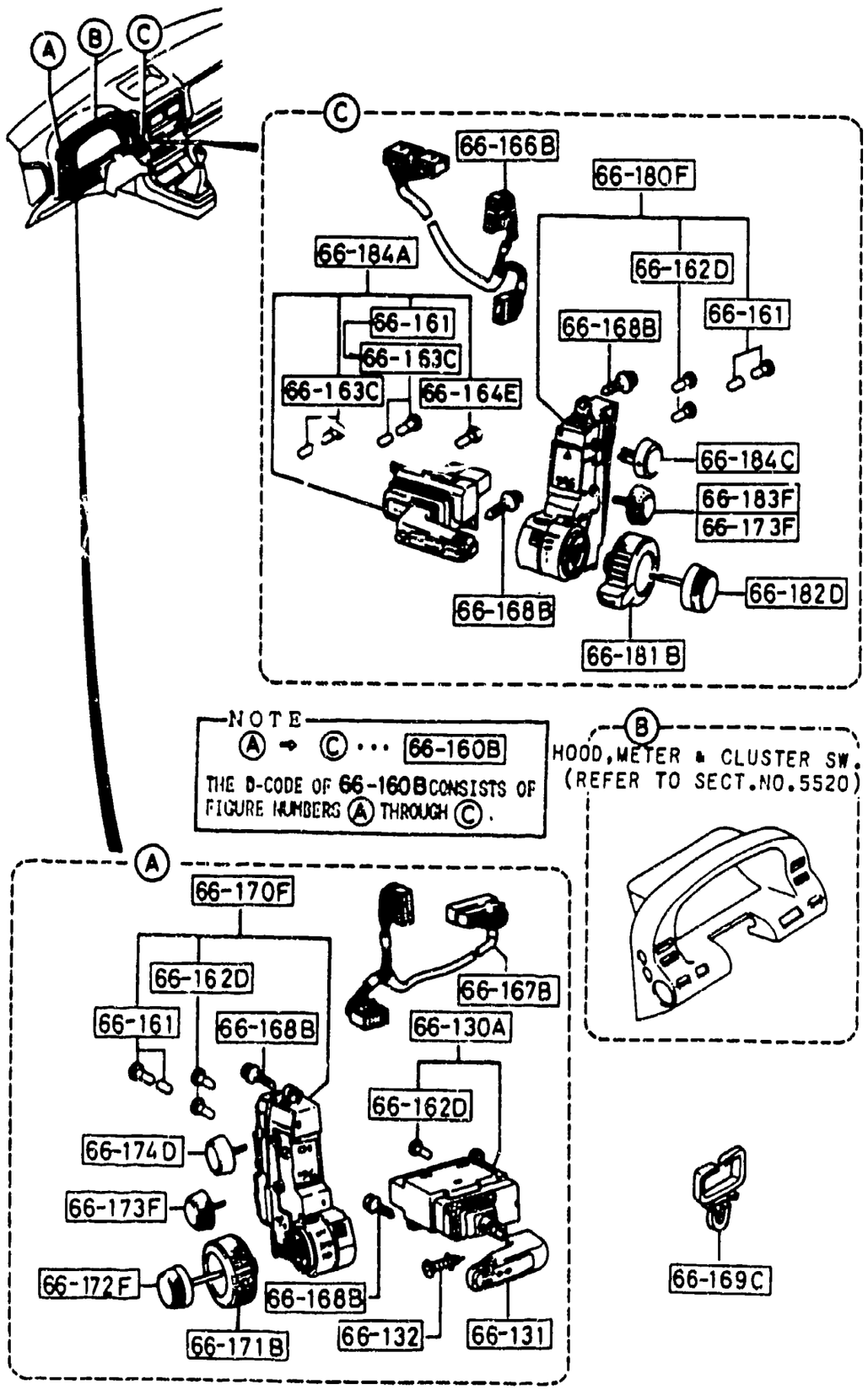

ITEM NO.	D-CODE	DESCRIPTION	PART NO	QTY	MODEL/DESCRIPTION	REMARKS
	66 130A	SWITCH, TURN-CLUSTER	FB01-66-130	1		
	66 131	KNOB, TURN-CLUSTER SWITCH	FB01-66-131	1		
	66 132	SCREW & WASHER, TURN KNOB	FB01-66-132	1		
	66 160B	SWITCH, CLUSTER	FB67-66-160B	1	CONV	
			FB01-66-160F	1	SPORT PKG., SE	
			FB07-66-160F	1	GXL, TURBO	
	66 161	BULB 'A', CLUSTER SWITCH	FB01-66-161	3		-5B01
				2		5B01-
	66 162D	BULB 'B', CLUSTER SWITCH	FB01-66-162	4	CONV.	
				5	COUPE	
	66 163C	BULB 'C', CLUSTER SWITCH	FB01-66-163	1	W/ RR. WIPER & A.C.C.	-5B01
				2	W/ RR. WIPER & A.C.C.	5B01-
	66 164E	BULB 'D', CLUSTER SWITCH	FB01-66-164	1	W. RR. WIPER & A.C.C.	
	66 166B	HARNESS, WIPER-CLUSTER SWITCH	FB01-66-166	1		
	66 167B	HARNESS, LIGHT-CLUSTER SWITCH	FB01-66-167	1		
	66 168B	SCREW, CLUSTER SWITCH	FB01-66-168	8		
	66 169C	CLIP, CORD-CLUSTER SWITCH	FB01-66-169	1		5C01-
	66 170F	SWITCH, LIGHT-CLUSTER SWITCH	FB01-66-170	1		
	66 171B	KNOB, LIGHT-CLUSTER SWITCH	FB01-66-171	1		
	66 172F	KNOB, PANEL LIGHT-CLUSTER	FB01-66-172	1		
	66 173F	KNOB, SMALL-CLUSTER SWITCH	FB01-66-173	2		
	66 174D	KNOB, REAR DEFFOGER-CLUSTER	FB01-66-174	1		
	66 180F	SWITCH, WIPER-CLUSTER SWITCH	FB01-66-180	1	W/O RR. WIPER W/O A.C.C.	
			FB07-66-180	1	W/ RR. WIPER W/ A.C.C.	
			FB67-66-180	1	CONV.	
	66 181B	KNOB, WIPER-CLUSTER SWITCH	FB01-66-181	1		
	66 182D	KNOB, WASHER-CLUSTER SWITCH	FB01-66-182	1		
	66 183F	KNOB, DUMMY-CLUSTER SWITCH	FB01-66-183	1	W/O RR. WIPER W O A.C.C	
	66 184A	SWITCH, CRUISE-CLUSTER	FB07-66-34X	1	W/ RR. WIPER W A.C.C.	
	66 184C	KNOB, HAZARD-CLUSTER SWITCH	FB01-66-184	1		

5B01 FC33* -113629
5C01 FC33* -118628

6615-1 POWER WINDOW SWITCHES

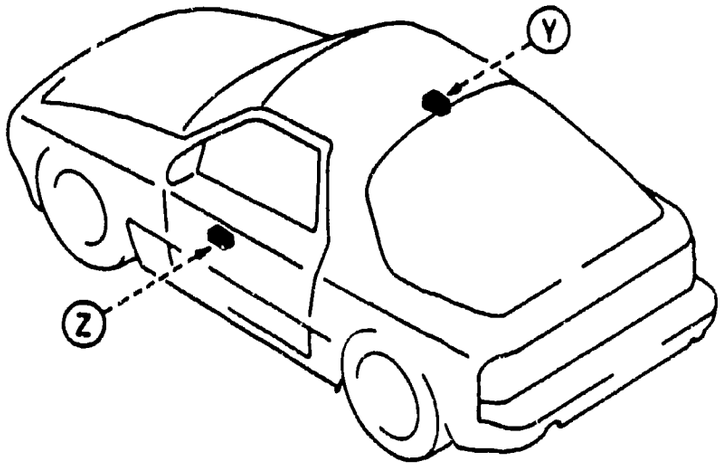

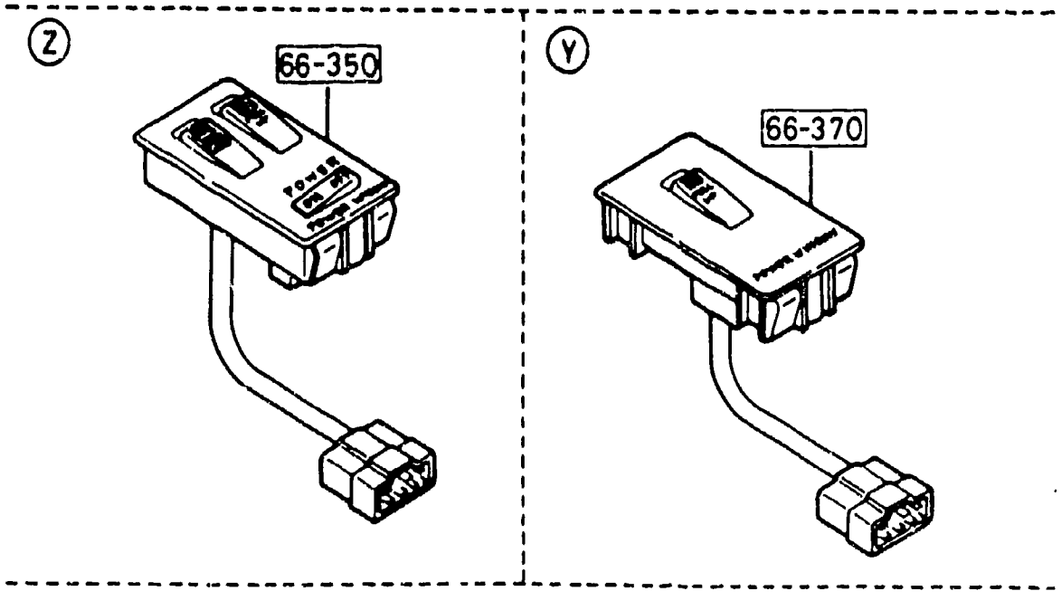

ITEM NO.	D-CODE	DESCRIPTION	PART NO.	QTY	MODEL/DESCRIPTION	REMARKS
	66 350	SWITCH, POWER WINDOW	FB05-66-350A	1		
	66 370	SWITCH, POWER WINDOW	FB05-66-370A	1		

6620-1 DOOR SWITCH

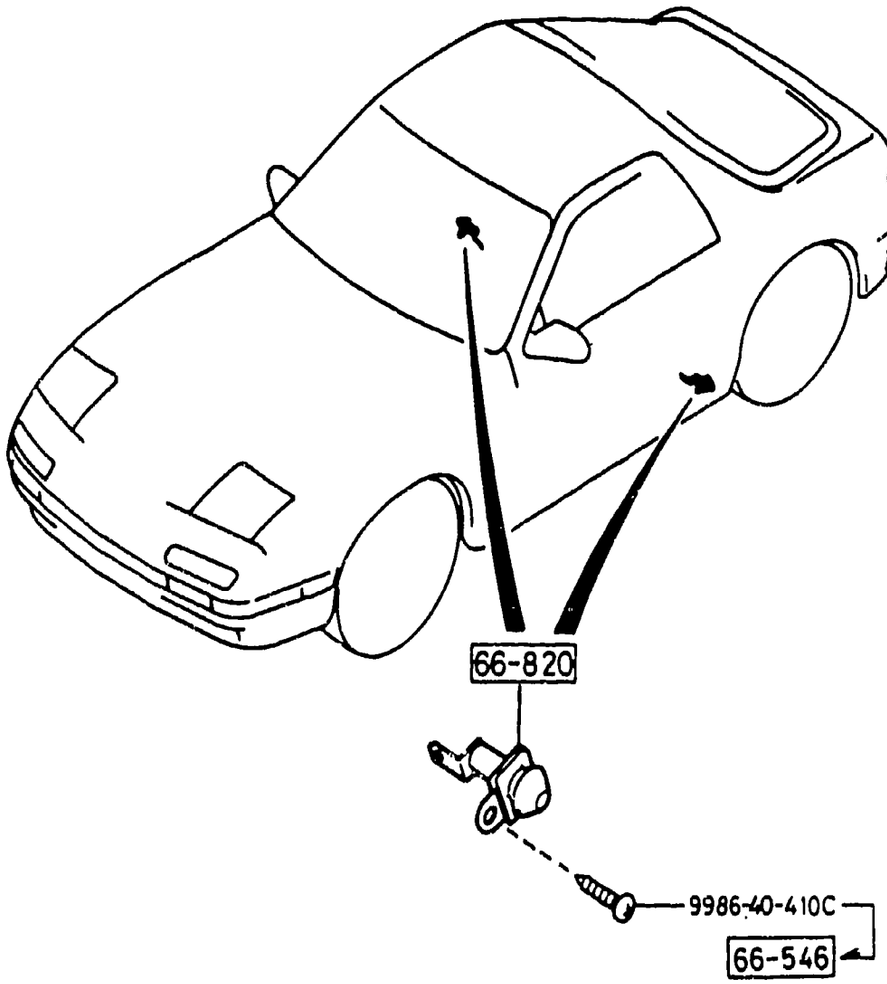

ITEM NO.	D-CODE	DESCRIPTION	PART NO.	QTY	MODEL/DESCRIPTION	REMARKS
	66 546	SCREW, DOOR SWITCH	H260-66-546	2		6801-
	66 820	SWITCH, DOOR	FB01-66-540	2		

6801 FC33* -507386

6630-1 RELAYS & CPU (BODY)

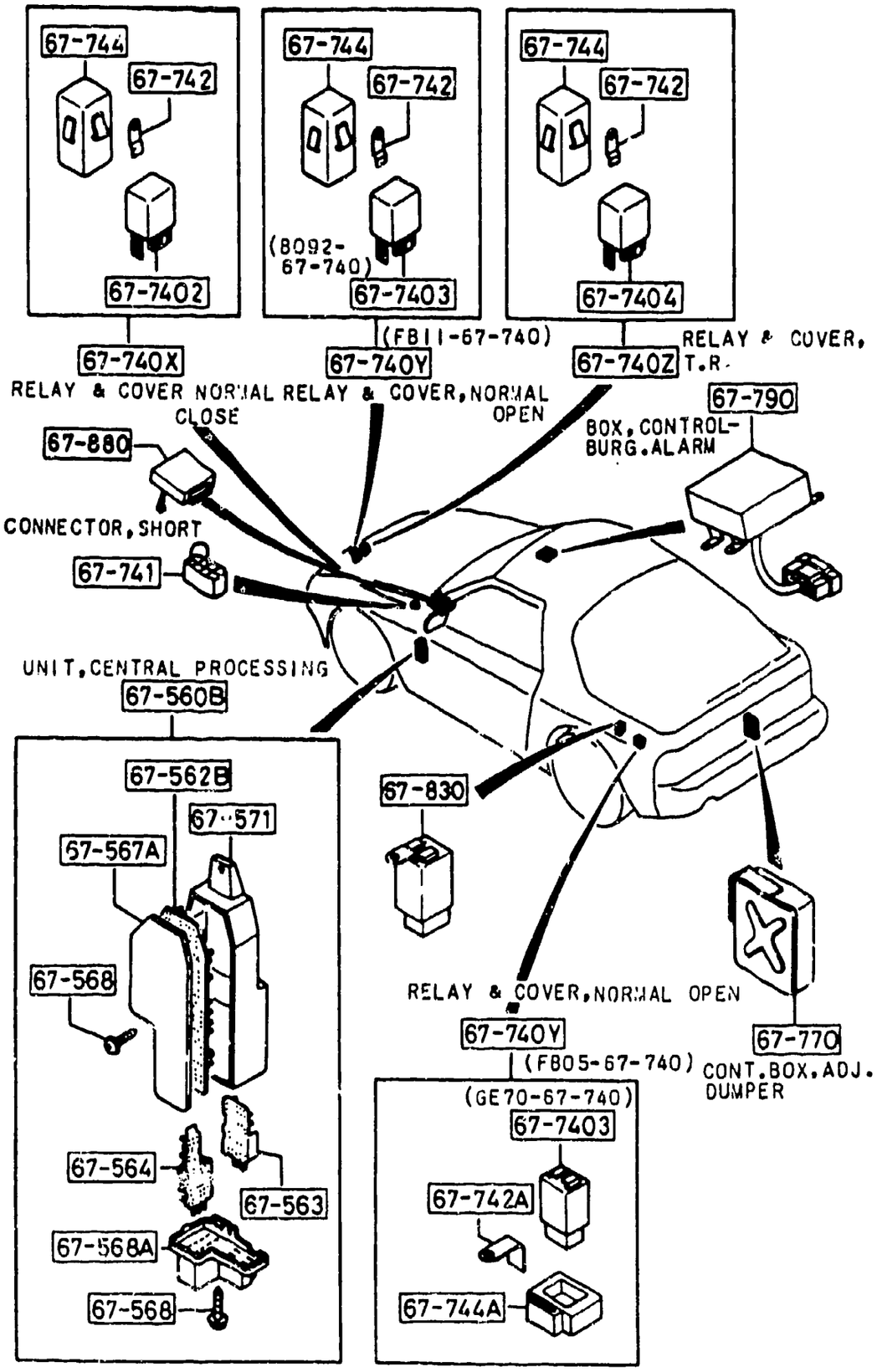

ITEM NO.	D-CODE	DESCRIPTION	PART NO.	QTY	MODEL/DESCRIPTION	REMARKS
	67 560B	UNIT, CIU	FB01-67-560	1	W/O KEY ILLUM.	
			FB05-67-560	1	W/ KEY ILLUM.	
	67 562B	PLATE, MAIN-CPU	FB01-67-562	1	W/O KEY ILLUM.	
			FB05-67-562	1	W/ KEY ILLUM.	
	67 563	PLATE, LAMP CHECK-CPU	FB01-67-563	1		
	67 564	PLATE, FLASHER-CPU	FB01-67-564	1		
		REFER TO SERV. BULL. NO. 021/86, CAT. 15, FOR MORE INFO.				
	67 567A	COVER, MAIN-CPU	FB01-67-567	1		
	67 568	SCREW, TAPPING	FB01-67-569	2		
	67 568A	COVER, SUB-CPU	FB01-67-568	1		
	67 571	CASE, CONTROL UNIT	FB01-67-566	1		
	67 7402	RELAY, N.C.	FB25-67-740	1	10A W/ BURGLAR ALARM	
	67 7403	RELAY, N.O.	BO92-67-740	1		
			GE70-67-740	1	30A	
	67 7404	RELAY, TRANSFER	FB02-67-740	1	20A	
	67 740X	RELAY & COVER, NORMALLY CLOSE	FB10-67-740	1	W/ BURGLAR ALARM	
	67 740Y	RELAY & COVER, NORMALLY OPEN	FB05-67-740	1	30A	
			FB11-67-740	1	30A	
	67 740Z	RELAY & COVER	FB12-67-740	1	20A	
	67 741	CONNECTOR, SHORT	WB22-67-741	1	W/O BURGLAR ALARM	
	67 742	BRACKET, RELAY	FB10-67-742	3	W/ BURGLAR ALARM	
	67 742A	BRACKET, RELAY	FB05-67-742	1		
	67 744	BOOT, RELAY-WATER PROOF	FB10-67-744	3	W/ BURGLAR ALARM	
	67 744A	BAND, RELAY-SOUND PREVENT	FB05-67-744	1		
	67 770	BOX, CONTROL	FB07-67-770A	1	W/ A.A.S.	
	67 790	BOX, CONTROL-BURGLAR ALARM	FB01-67-790C	1		-7701
			FB67-67-790A	1		7701-
	67 830	UNIT, DOOR LOCK & TIMER	FB01-67-830	1		7701-
7701	FC33*	-550169				

6635-1 HORNS

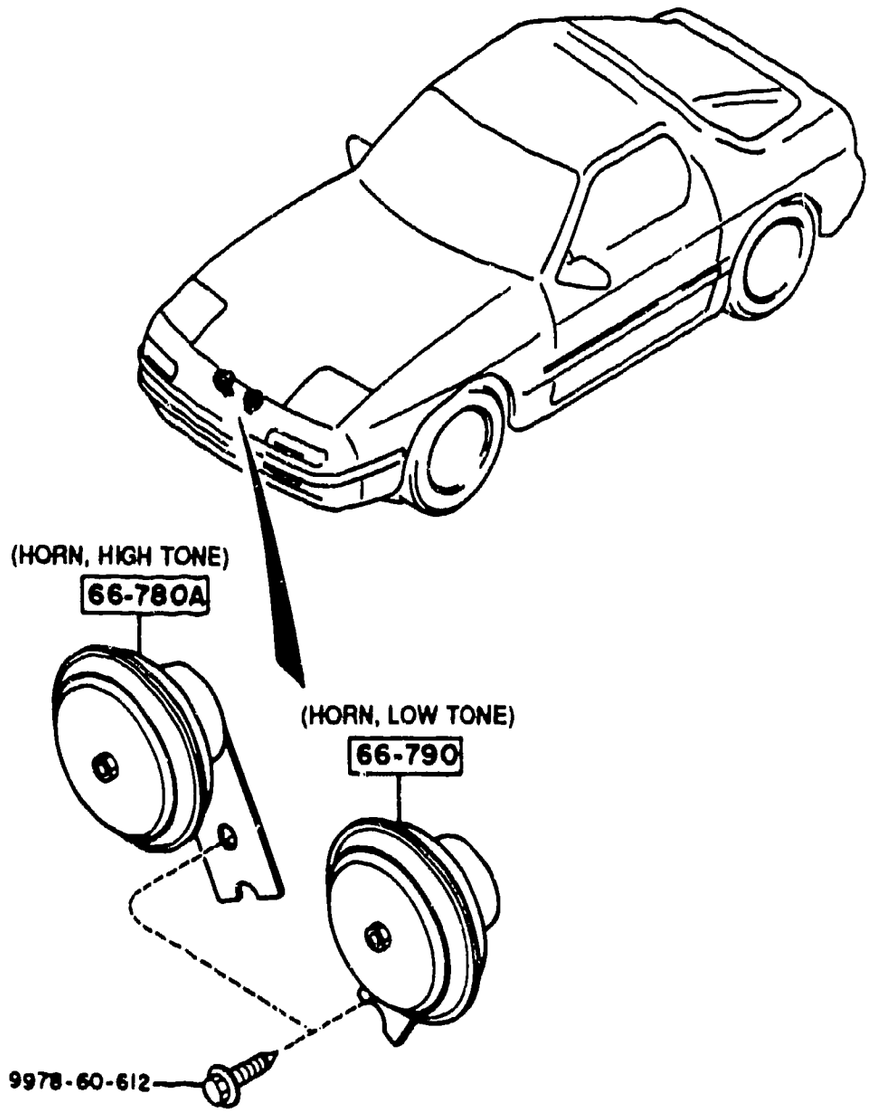

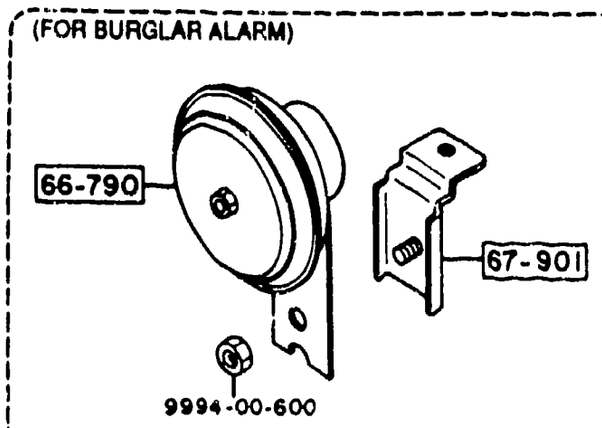

ITEM NO.	D-CODE	DESCRIPTION	PART NO.	QTY	MODEL/DESCRIPTION	REMARKS
	66 780A	HORN, HIGH TONE	FB01-66-780	1	80X2D HORN	-5C01
			H001-66-780B	1	100X2D HORN	-5C01
			FB03-66-780	1		5C01-
	66 790	HORN, LOW TONE	FB01-66-790	2	80X2D HORN	-5C01
			H001-66-790B	1	100X2D HORN	-5C01
			FB01-66-790	1	W/ BURGLAR ALARM	5C01-
			FB03-66-790	1		5C01-
	67 901	BRACKET, HORN	FB05-66-792	1	W/ BURGLAR ALARM	

5C01 FC33* -118628

6640-1 AUTO CRUISE CONTROL SYSTEM

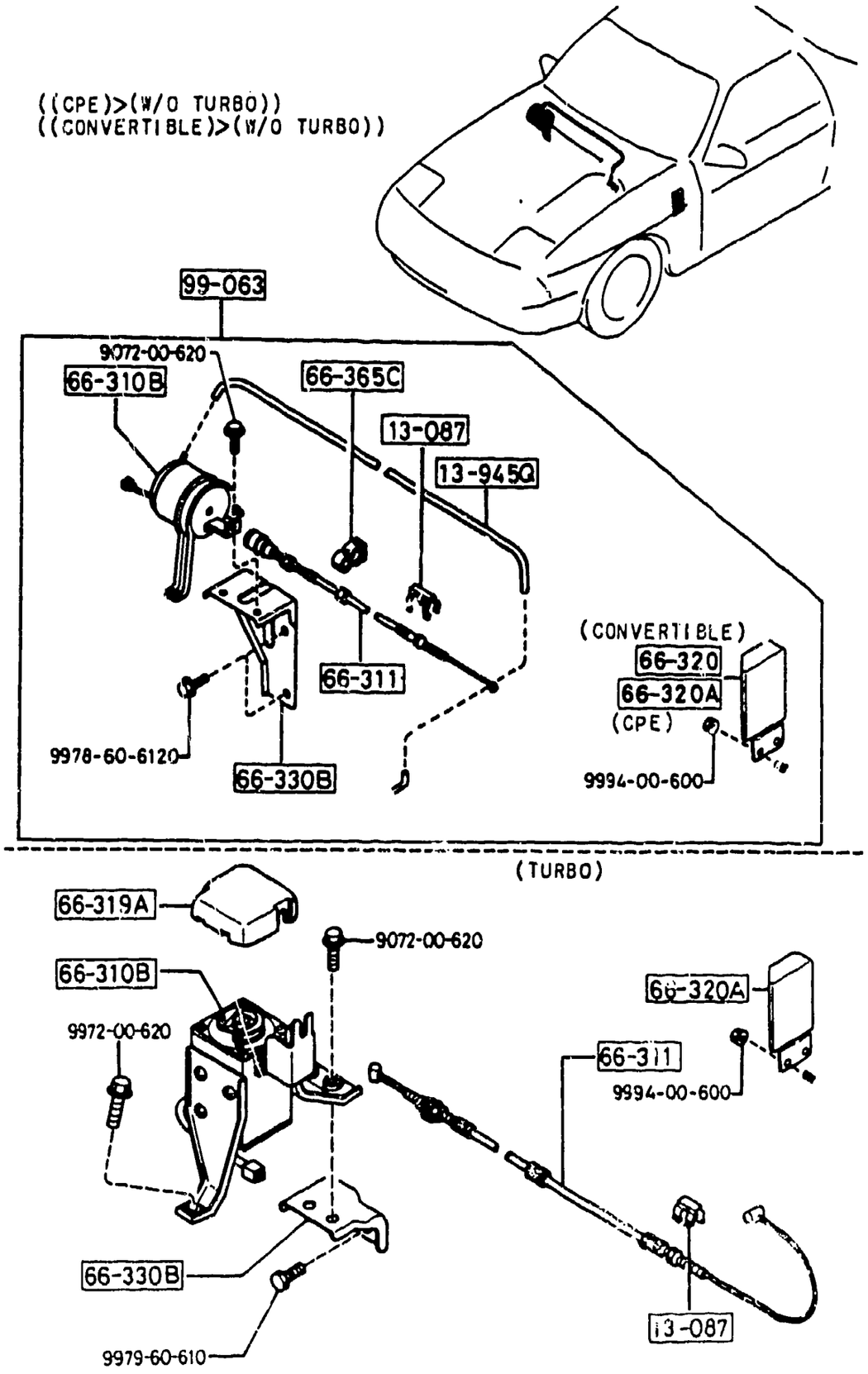

ITEM NO.	D-CODE	DESCRIPTION	PART NO.	QTY	MODEL/DESCRIPTION	REMARKS
	13 087	SPRING	8871-13-087A	1		
	13 945Q	PIPE	FA43-66-361A	1	W/O TURBO	
	66 310B	ACTUATOR, A.C.C.	FB01-66-310A	1	W/O TURBO	
			F046-66-310B	1	TURBO	
	66 311	WIRE, A.C.C.	FB01-66-311B	1	W/O TURBO	
			FB44-66-311A	1	TURBO	
	66 319A	COVER, ACTUATOR	B107-66-319	1	TURBO	
	66 320A	UNIT, A.C.C. CONTROL	FB01-66-320A	1	W/O TURBO	
			FB44-66-320	1	TURBO	
	66 330B	BRACKET, A.C.C. BOX	FB01-66-330	1	CAL.	
			FB02-66-330	1	FED.	
	66 365C	CLIP	UB40-66-365	2	W/O TURBO	
	99 063	A.C.C. SET	8AF1-66-340	1	COUPE	
			8AF2-66-340	1	CONVERTIBLE	

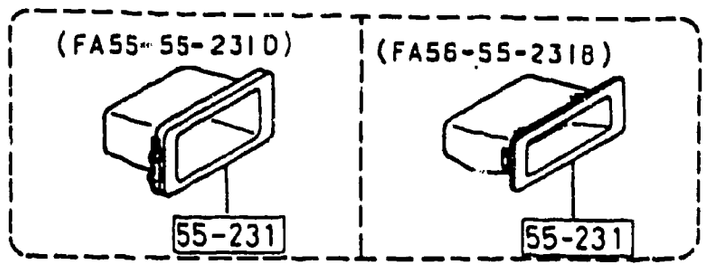
(FA55-55-231D)
(FA56-55-231B)
55-231
55-231

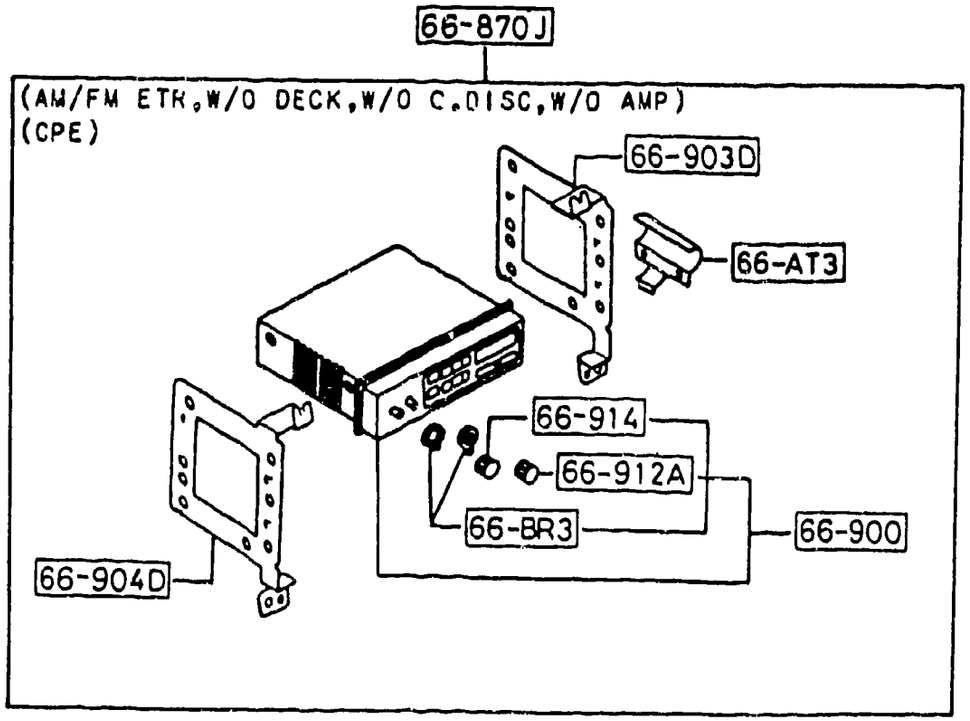
66-870J
(AM/FM ETR,W/O DECK,W/O C.DISC,W/O AMP)
(CPE)
66-903D
66-AT3
66-914
66-912A
66-BR3
66-900
66-904D

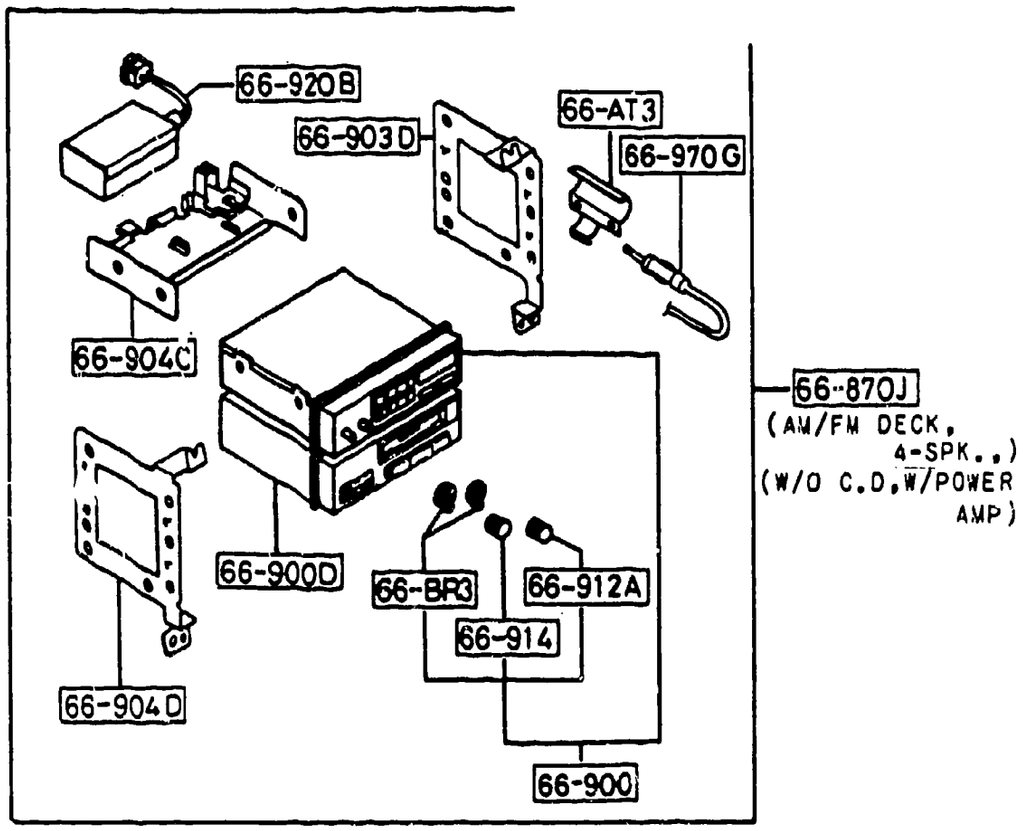
66-920B
66-903D
66-AT3
66-970G
66-904C
66-900D
66-BR3
66-912A
66-914
66-904D
66-900
66-870J
(AM/FM DECK, 4-SPK.,)
(W/O C.D,W/POWER AMP)

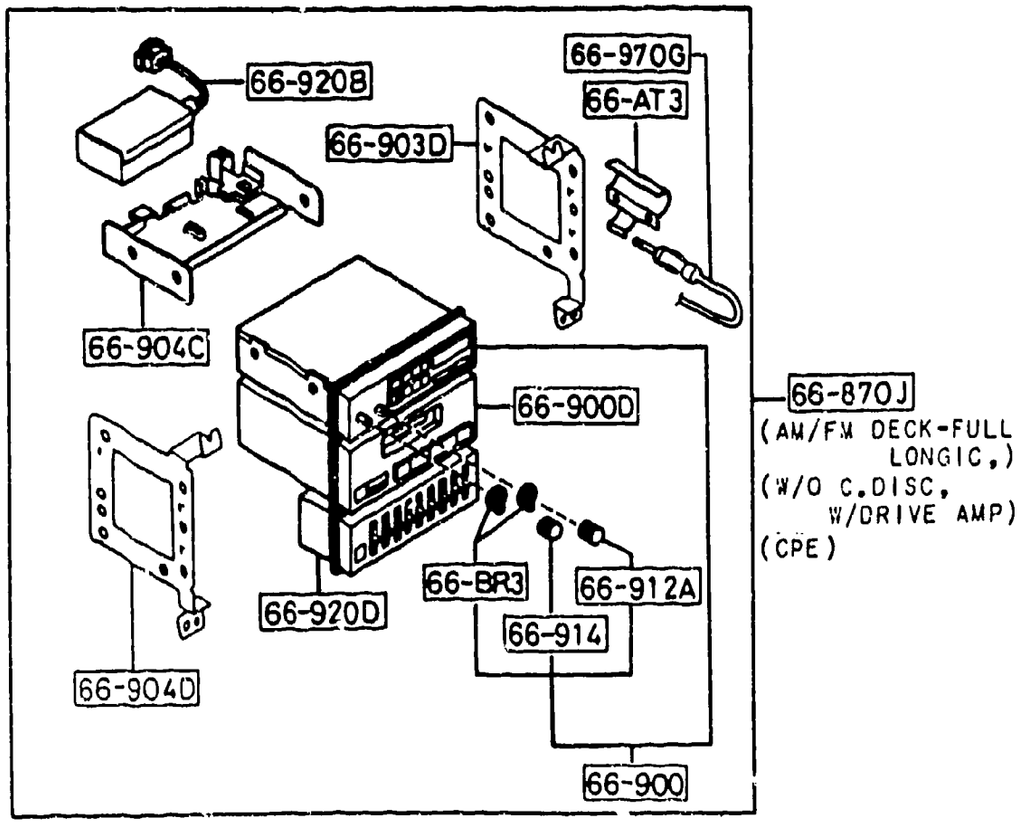
66-920B
66-970G
66-AT3
66-903D
66-904C
66-900D
66-870J
(AM/FM DECK-FULL LONGIC,)
(W/O C.DISC, W/DRIVE AMP)
(CPE)
66-BR3
66-912A
66-914
66-920D
66-904D
66-900

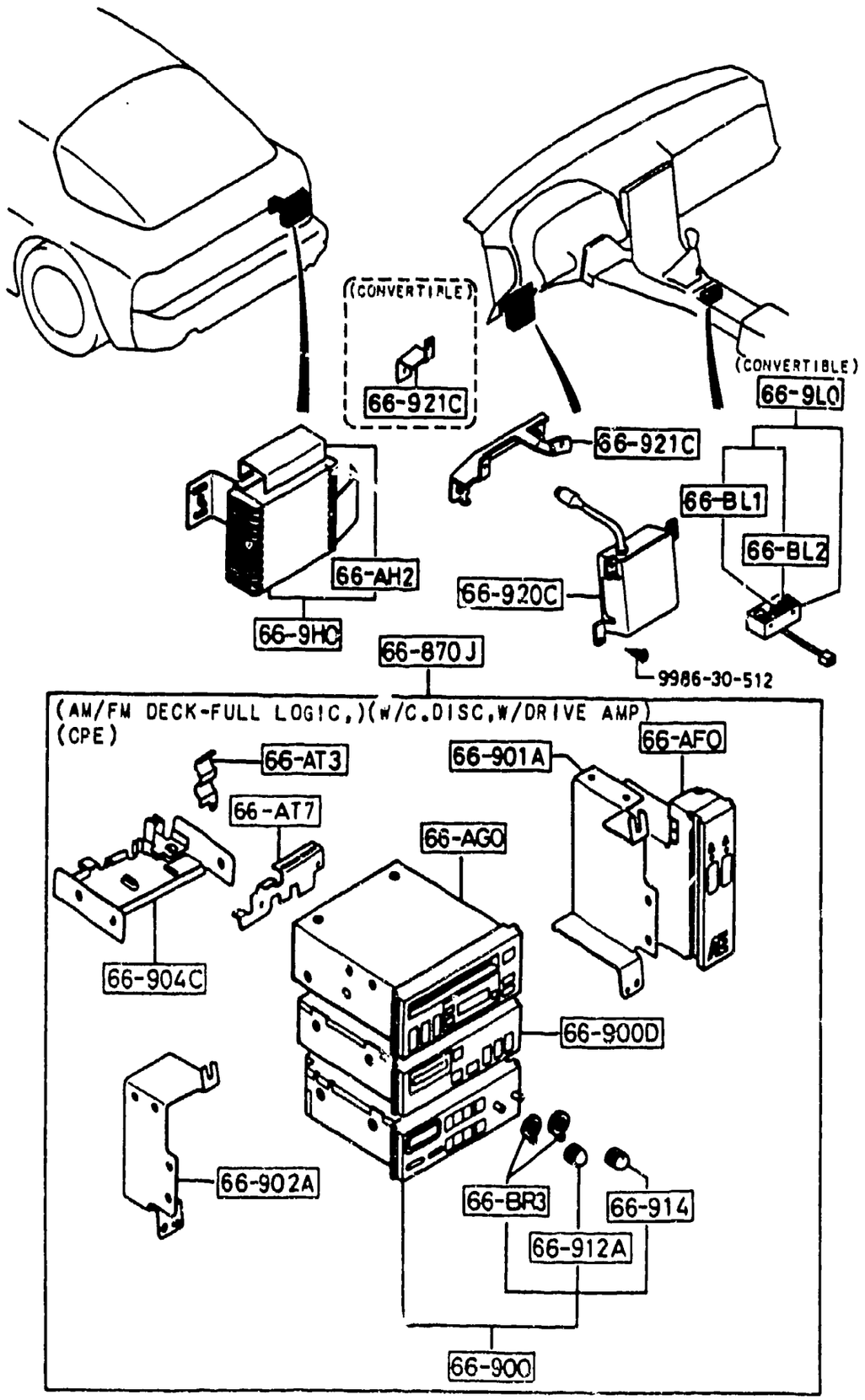
(CONVERTIBLE)
66-921C
(CONVERTIBLE)
66-9LQ
66-921C
66-BL1
66-BL2
66-AH2
66-920C
66-9HC
66-870J
9986-30-512
(AM/FM DECK-FULL LOGIC,)(W/C.DISC,W/DRIVE AMP)
(CPE)
66-AT3
66-AFQ
66-901A
66-AT7
66-AGQ
66-904C
66-900D
66-902A
66-BR3
66-914
66-912A
66-900

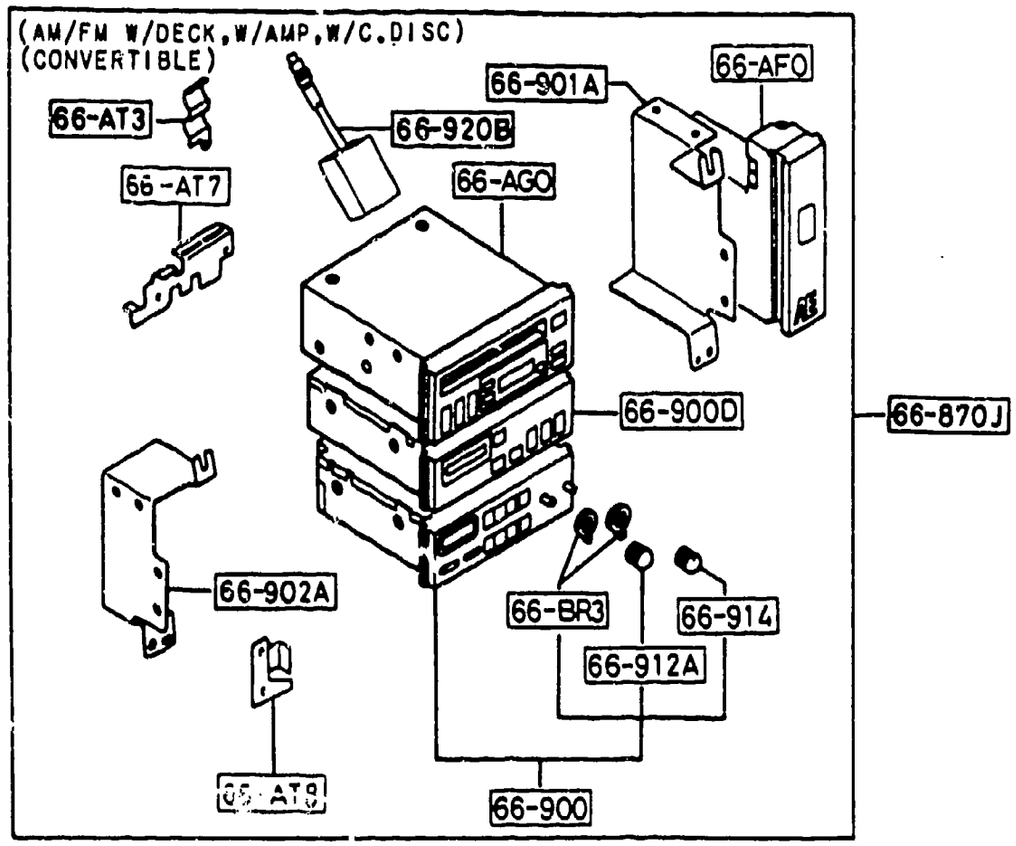
(AM/FM W/DECK,W/AMP,W/C.DISC)
(CONVERTIBLE)
66-AT3
66-901A
66-AFQ
66-920B
66-AT7
66-AGQ
66-900D
66-870J
66-902A
66-BR3
66-914
66-912A
66-900

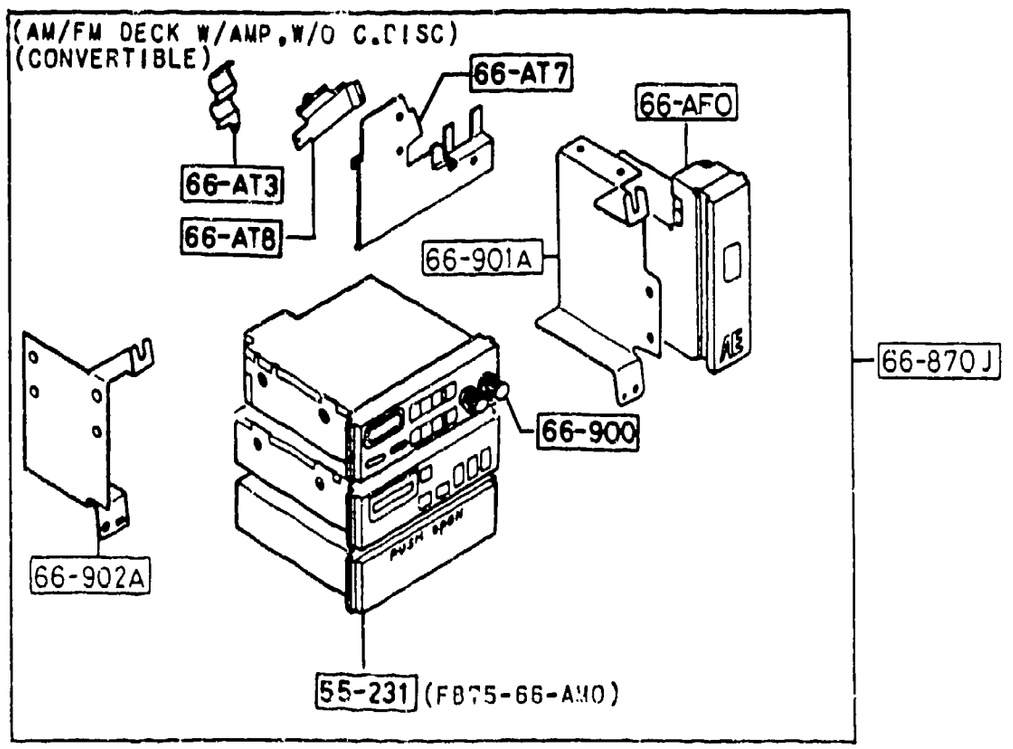
(AM/FM DECK W/AMP,W/O C.DISC)
(CONVERTIBLE)
66-AT7
66-AT3
66-AFQ
66-AT8
66-901A
66-870J
66-900
66-902A
55-231 (FB75-66-AMO)

SEE ILLUSTRATION/S AT FRAME 2 - I16

ITEM NO.	D-CODE	DESCRIPTION	PART NO.	QTY	MODEL/DESCRIPTION	REMARKS
	55 231	ORNAMENT, STEREO	FA56-55-231B	1	W/ CASS. W/O C.D. COUPE	
		BLACK	00			
			FB75-66-AM0	1	W/O C.D. CONV.	
			FA55-55-231D	1	W/O CASS. COUPE	
		BLACK	00			
	55 991	ORNAMENT, TUNER	FA60-55-231A	1		
		BLACK	00			
	66 870J	AUDIO SET	0000-81-9105	1		
	66 878	BRACKET, AUDIO	FB05-66-870	1		
	66 900	TUNER	0000-81-903B	1	W/O CASS.	
			0000-81-9105	1	W/ CASS. W/O C.D.	
			0000-81-5101	1	W/ C.D.	
	66 900D	DECK, TAPE-CASSETTE	0000-81-805B	1	W/O C.D. STD, SPT, SE, LX	
			0000-81-8052	1	W/O C.D. GXL, TURBO	
			0000-81-6110		W/ C.D. GXL, TURBO, CONV.	
	66 901A	BRACKET (R), TUNER	0000-81-5101-KT	1		
	66 902A	BRACKET (L), TUNER	0000-81-5101-KT	1		
	66 903D	BRACKET (R), REAR-AUDIO	FB03-66-902	1	W/O C.D.	
		<A>	0000-81-9035-KT	1		
	66 904C	BRACKET, LOW	0000-81-9035-KT	1		
	66 904D	BRACKET (L), REAR-AUDIO	0000-81-9035-KT	1	W/O C.D.	
	66 912A	KNOB, TONE-TUNER	0000-81-9035-KB	1	W/O C.D.	
			0000-81-5101-KB	1	W/ C.D.	
	66 914	KNOB, VOLUME-TUNER	0000-81-9035-KB	1	W/O C.D.	
			0000-81-5101-KB	1	W/ C.D.	
	66 920B	AMPLIFIER, POWER-AUDIO	0000-81-580T	1		
	66 920C	AMP, AE SYSTEM-AUDIO	0000-81-4103	1	W C.D.	
	66 920D	EQUALIZER, GRAPHIC	0000-81-5792	1	W/ C.D.	
		REFER TO ACC. BULL. NO. XS-3 FOR EXTENSION DIN CORD INFO.				
	66 921C	BRACKET, AMP-AE SYSTEM	FB76-66-921	1	CONV.	
			FB11-66-921A	1	W/ C.D. COUPE	
	66 970G	CORD, SHORT	FB03-66-A40	1	W/ CASS. W/O C.D.	
	66 9H0	HIDEAWAY, C.D.	0000-81-8102	1		

ITEM NO	D-CODE	DESCRIPTION	PART NO.	QTY	MODEL/DESCRIPTION	REMARKS
	66 9L0	CONTROL, REMOTE-AUDIO	F055-66-9L0A	1	CONV. W/ C.D.	
	66 AF0	CONTROLLER, AE SYSTEM-DISC	0000-81-2101	1		
	66 AG0	PLAYER, COMPACT DISC	0000-81-6102	1		
	66 AH2	COVER, HIDEAWAY-C.D.	FB11-66-AH2	1		-6801
	66 AT3	BRACKET (R), ANTENNA	FB03-66-AT3	1	W/O C.D.	
			FB11-66-AT3	1	W. C.D.	
	66 AT7	BRACKET (RR.), AUDIO	0000-81-5101-KT	1		
	66 AT8	BRACKET NO. 2, LWR.-AUDIO	FB11-66-AT8	1	CONV. W/ C.D.	
	66 BL1	KNOB, VOL.-REMOTE CONTROL	F055-66-BL1	1	CONV. W/ C.D.	
	66 BL2	SPRING, REMOTE CONT.-AUDIO	F055-66-BL2	1		
	66 BR3	KNOB, BALANCE-TUNER	0000-81-9035-KB	2		
		REFER TO ACC. BULL. NO. XS-1 FOR MORE AUDIO SYSTEM INFO.				

SEE ILLUSTRATION/S AT FRAME 2 - I16

6801 FC33* -507386