Parts Catalog

Mazda RX-7

('86-'88)

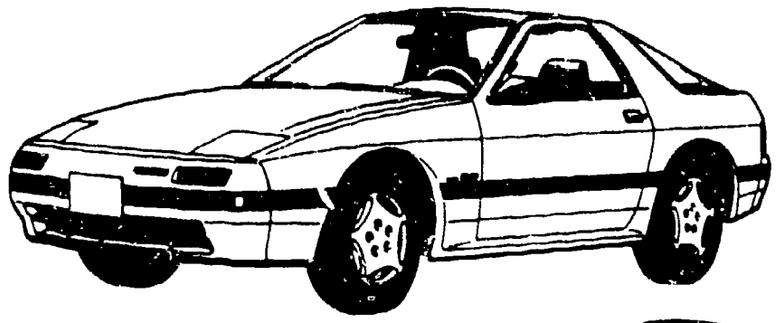

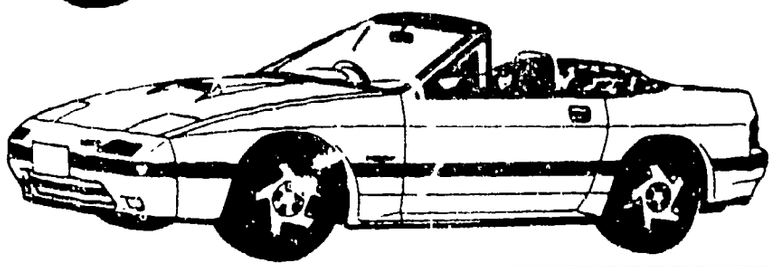

FC33•-100001~
FC351-100001~

August 1991

mazda

PICTORIAL INDEX

ROTARY ENGINE (1/2)

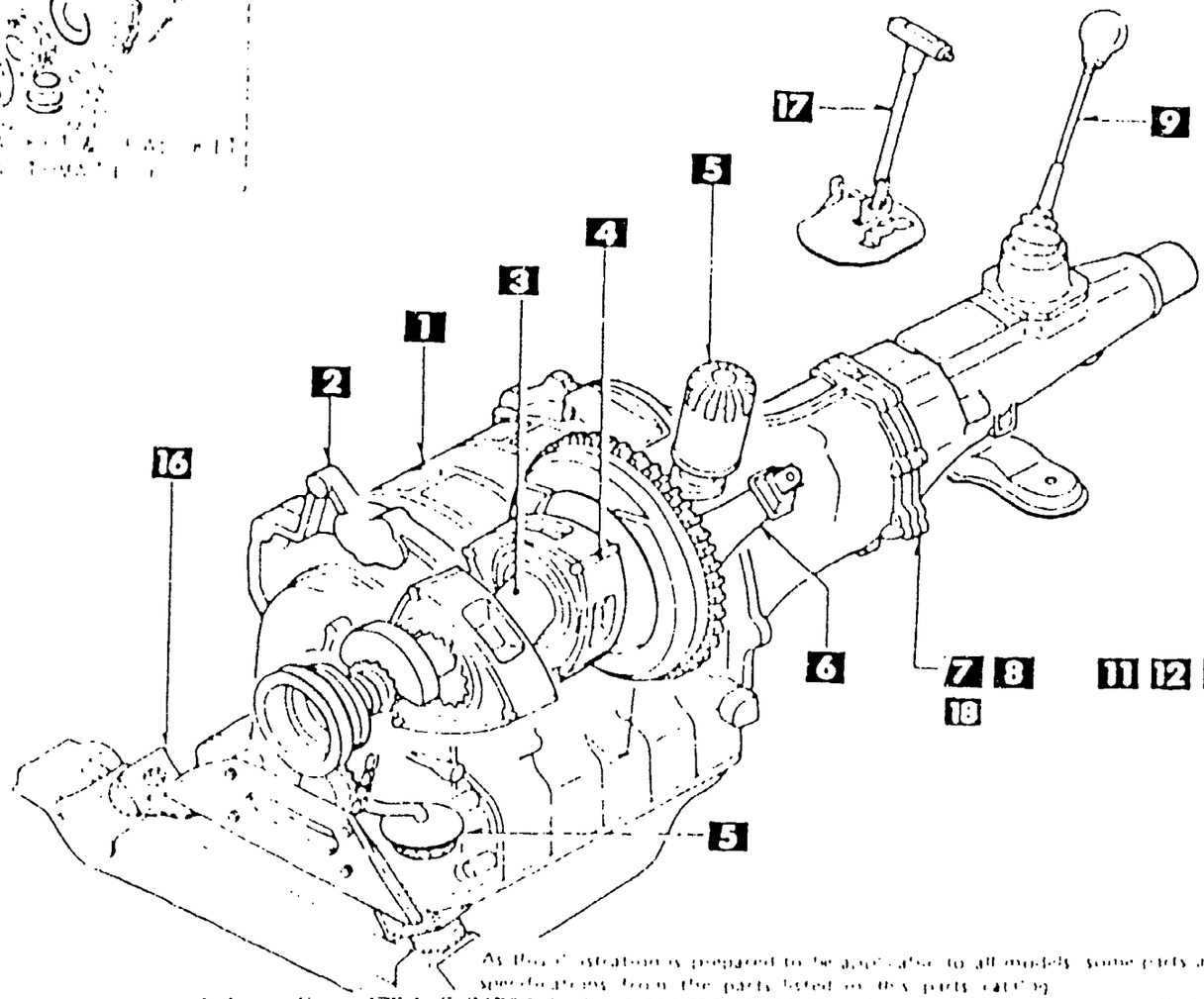

1000

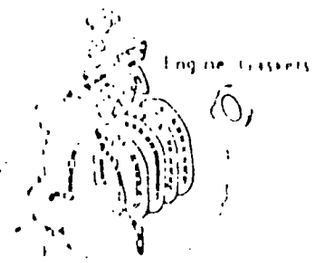

SHORT ENGINE & GASKET SETS

17 4600

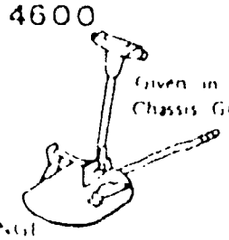

CONTROLS (MANUAL)

16 3900



& MOUNTINGS

1 1030

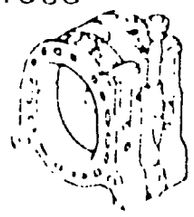

2 1040



OIL PAN & FRONT & REAR HOUSINGS

3 1100

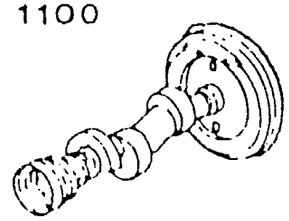

ECCENTRIC SHAFT & FLYWHEEL

4 1110

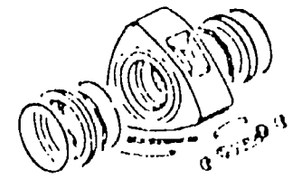

ROTOR & RELATED

5 1400

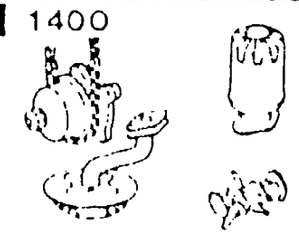

OIL PUMP & FILTER

6 1600

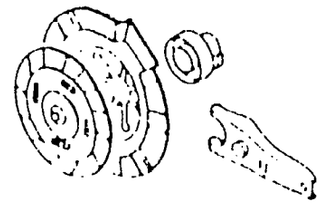

CLUTCH (MANUAL)

7 1700

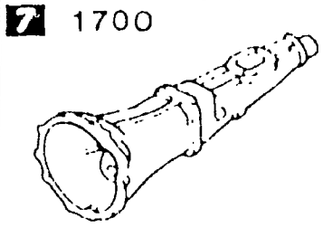

T/MISSION CASE (MANUAL)

8 1710

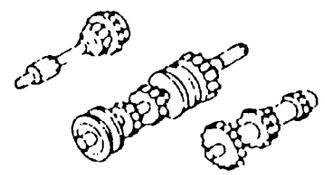

T/MISSION GEARS (MANUAL)

9 1720

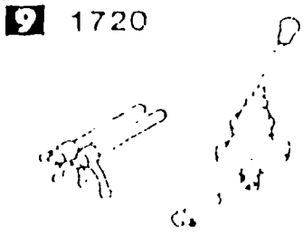

CHANGE COVER (MANUAL)

10

11 1910



CONVERTER OIL PUMP & PIPE

12 1920



13 1930

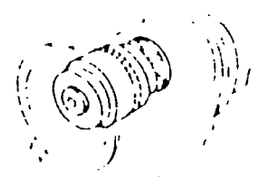

14 1940

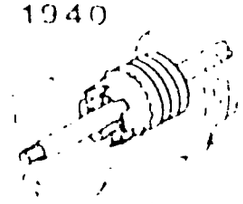

15 1950

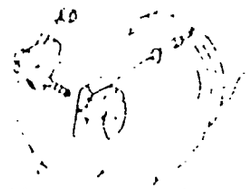

As this illustration is prepared to be applicable to all models, some parts are different or specifications from the parts listed on this parts catalog.

PICTORIAL INDEX

1 1300

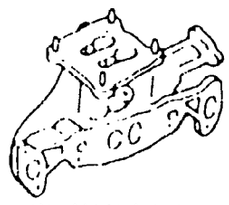

IN. MANIFOLD

2 1310

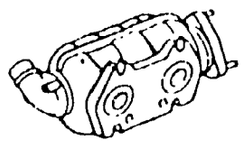

THERMAL REACTOR

3 1320



FUEL SYSTEM

4 1330

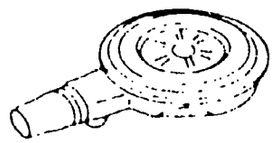

AIR CLEANER

5 1350



STARTING ASSIST SYSTEM

6 1364



THROTTLE BODY

7 1371



EMISSION CONTROLS
AIR PUMP & CONTROL VALVE

ROTARY ENGINE (2/2)

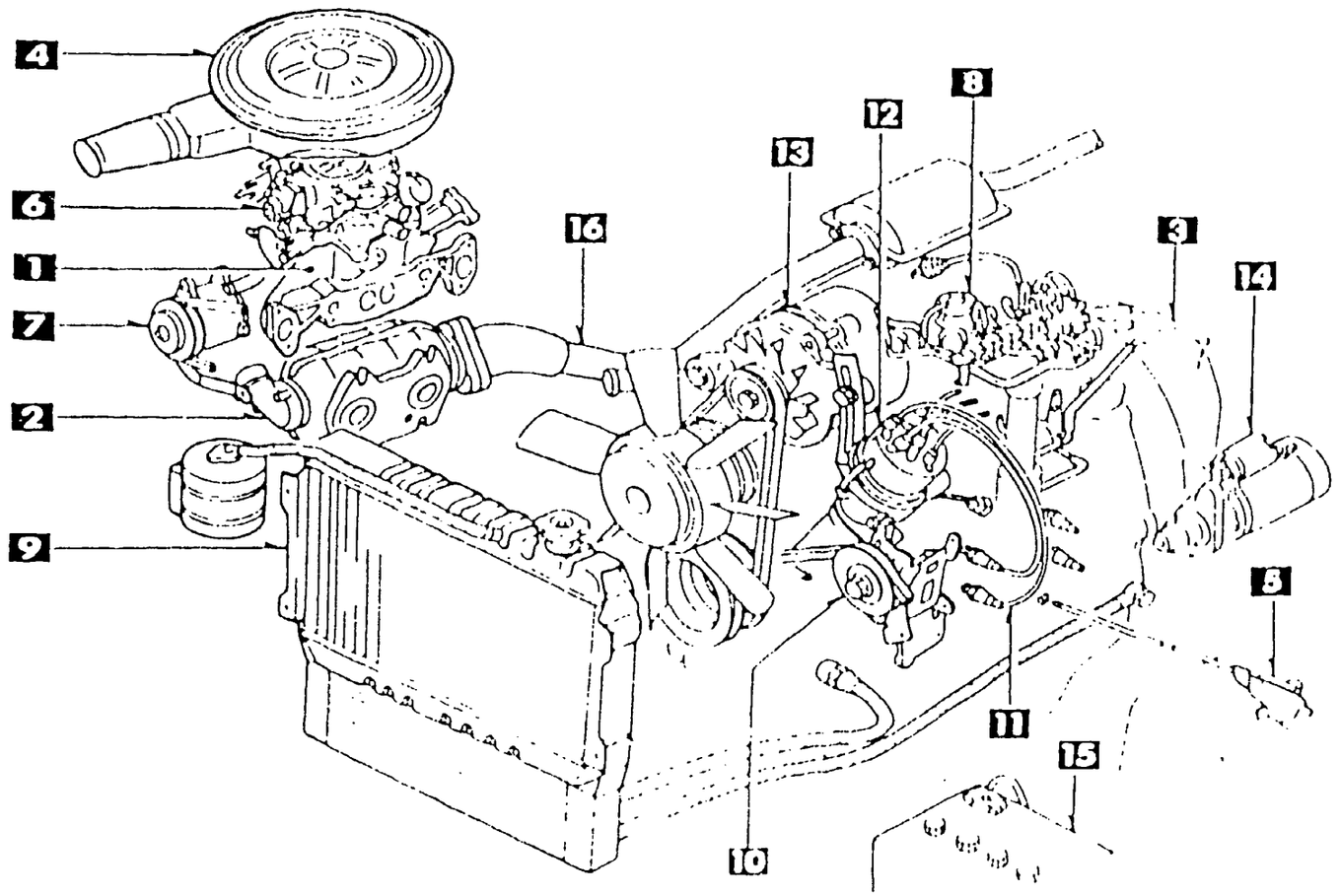

8 1380



EMISSION CONTROLS (EX. SIDE)

9 1500



COOLING SYSTEM

10 1580



16 4000



15 1850

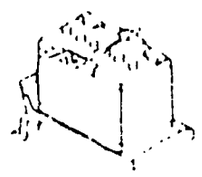

BATTERY

14 1840

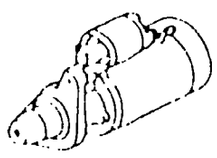

STARTER

13 1830



ALTERNATOR

12 1820



DISTRIBUTOR

11 1800



ELECTRICAL SYSTEM (EXCEPT

PICTORIAL INDEX

1 2500

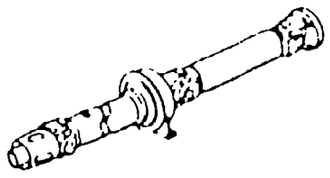

PROPELLER SHAFT

2 2550



REAR DRIVE SHAFTS

2600

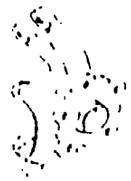

REAR AXLE

3 2610

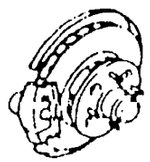

REAR BRAKE MECHANISMS

4 2710



DIFFERENTIAL (REAR)

5 2800
2810

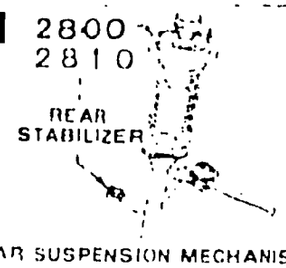

REAR SUSPENSION MECHANISMS

2830

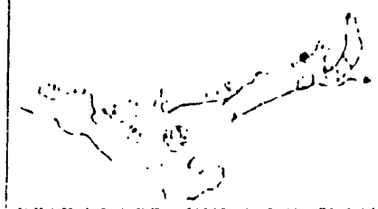

REAR LOWER ARMS & SUB FRAME

6 3200



STEERING WHEEL

7 3210

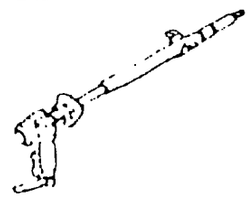

STEERING GEAR & LINKAGE

8 3220 3230



9 3240



POWER STEERING SYSTEM

10

11 3300

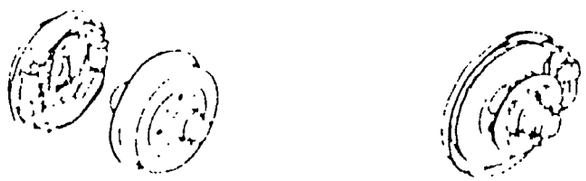

FRONT AXLE & WHEEL

12 3400



FRONT SUSPENSION

13 3410

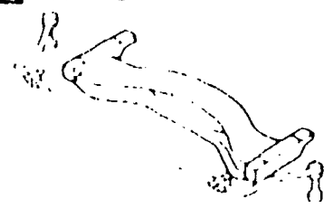

CROSSMEMBER & STABILIZER

14 3900



ENGINE & TRANSMISSION MOUNTINGS

15 4000

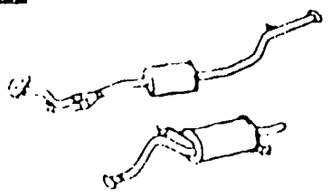

EXHAUST SYSTEM

16 4600

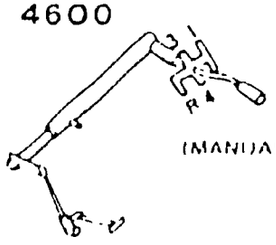

CHANGE CONTROLS

17 1720

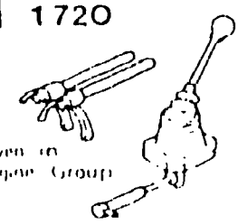

CHANGE CONTROLS (MANUAL)

CHASSIS (1/2)

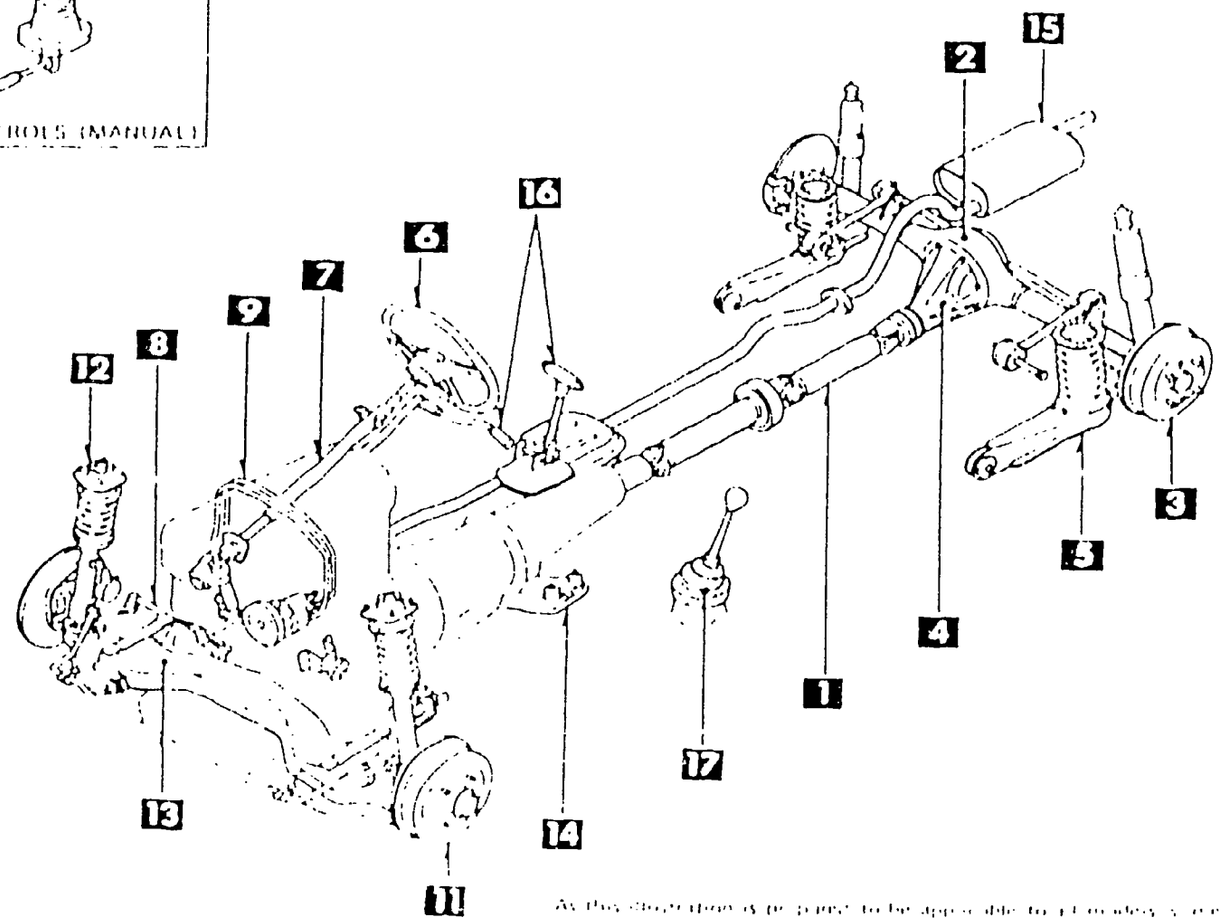

As this illustration is for guide to the applicable parts numbers, some parts may differ from the parts used on this model.

PICTORIAL INDEX

1 3700

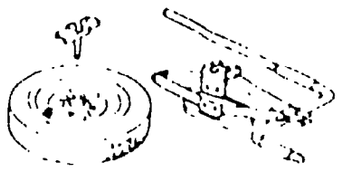

TIRE & JACK

2 4140



CLUTCH RELEASE & MASTER CYLINDERS

3 4160

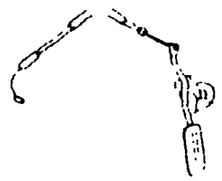

ACCELERATOR CONTROLS

4 4200

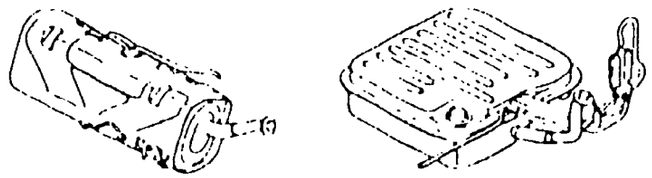

FUEL TANK

5 4300



CLUTCH & BRAKE

CHASSIS (2/2)

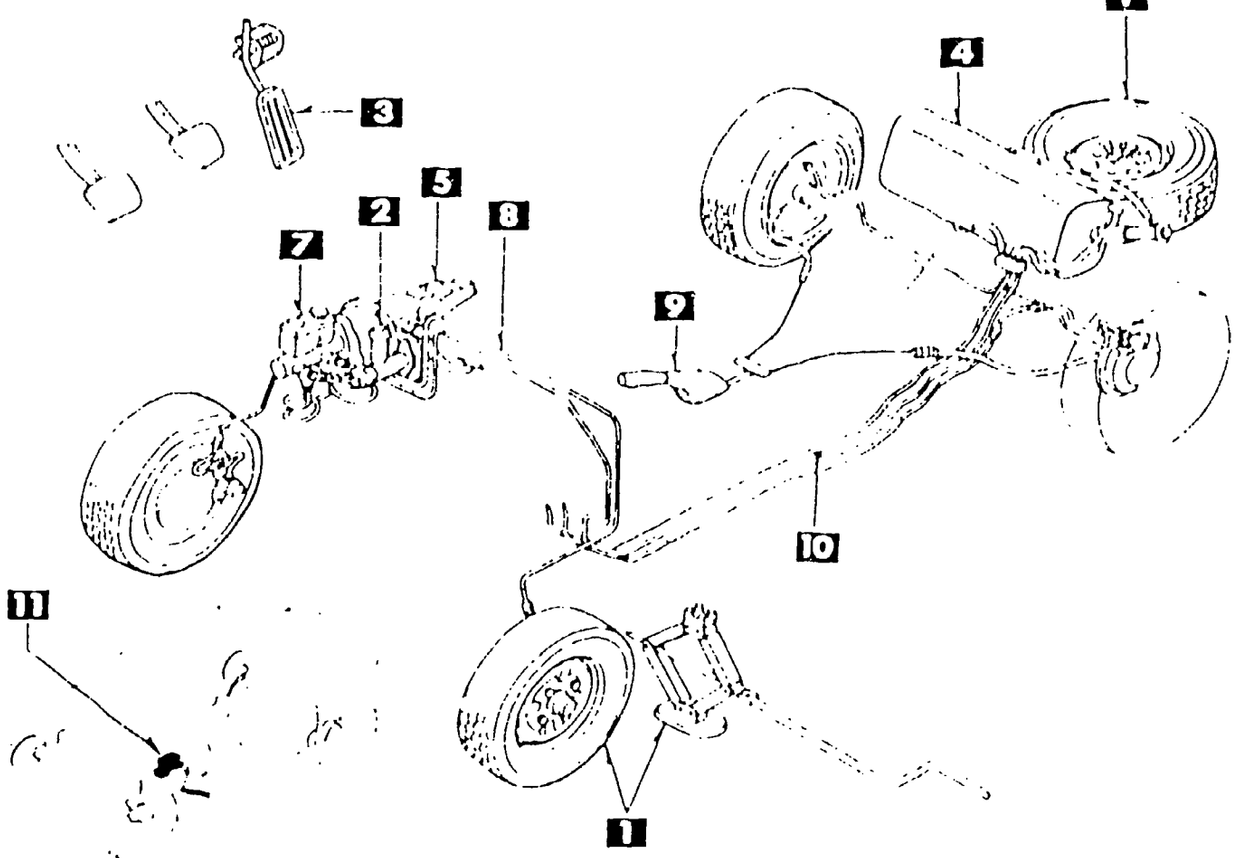

6

7 4340



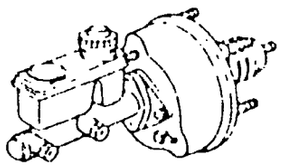

TANDEM MASTER CYL. & VACUUM POWER ASSIST SYSTEM

8 4360

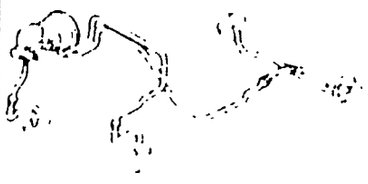

BRAKE PIPING

As the illustration is prepared for the application of various types of optional equipment, some items may not be used on this model. Refer to the parts manual for the exact content.

11 4370



AUTO. BRAKE SYSTEM

10 4500



PARKING BRAKE & LINKAGE

9 4400

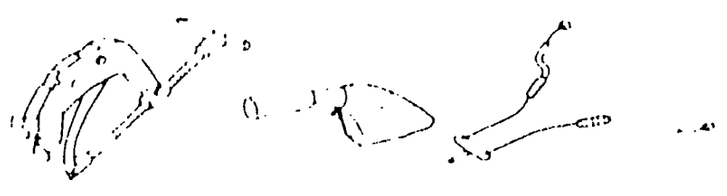

PARKING BRAKE SYSTEM

PICTORIAL INDEX

1 0900

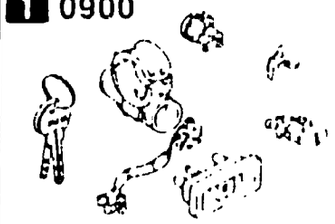

KEY SETS

2 5020

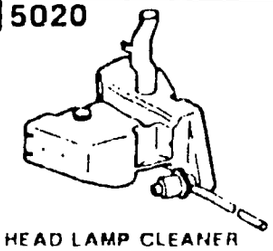

HEAD LAMP CLEANER

3 5100



HEAD LAMPS

4 5103

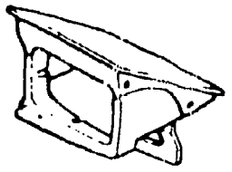

HEAD LAMP RETRACTORS

5 5105

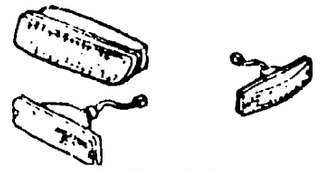

FRONT COMBINATION LAMPS

6 5110

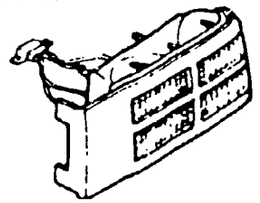

REAR COMBINATION LAMPS

19 6704

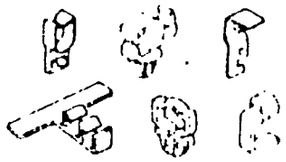

WIRING HARNESS CLAMPS

20 6720

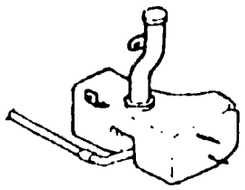

WINDSHIELD WASHER

21 6730

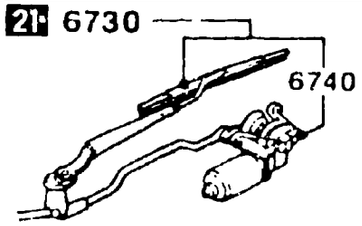

WINDSHIELD WIPERS

22 6750

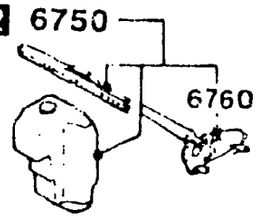

WINDOW WIPER & WASHER (REAR)

7 5120

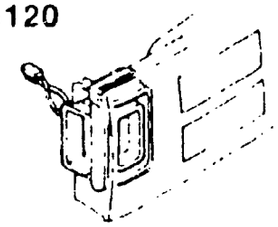

LICENSE LAMPS

18 6703



WIRING HARNESSES (DOOR, FLOOR/CEILING)

BODY (1/4)

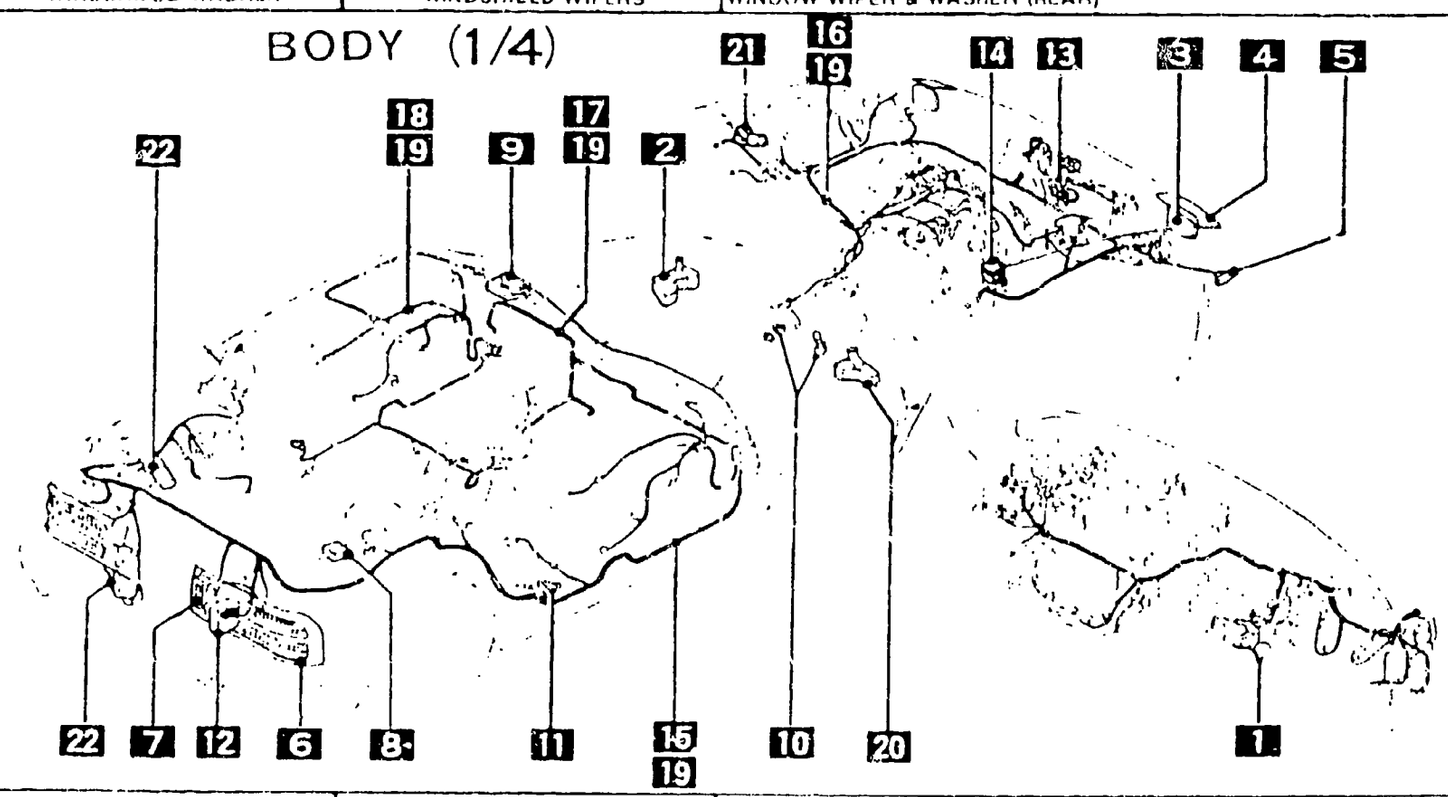

8 5125

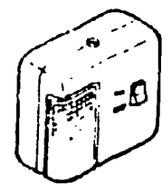

INTERIOR LAMPS

17 6702



WIRING HARNESSES (DASHBOARD)

9 5130

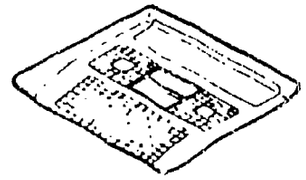

OVERHEAD CONSOLE

16 6701

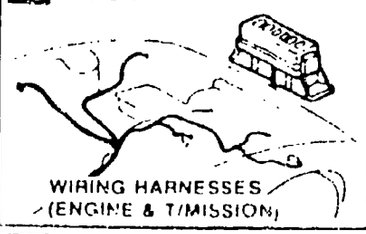

WIRING HARNESSES (ENGINE & T/MISSION)

10 6600

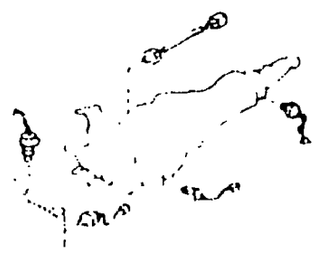

SWITCHES & RELAYS (ENGINE)

15 6700



WIRING HARNESSES (FRONT & REAR)

14 6640

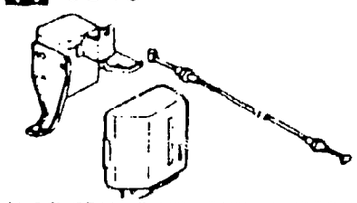

AUTO CRUISE CONTROL SYSTEM

13 6635

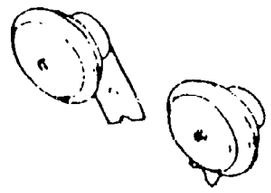

HORNS

12 6630

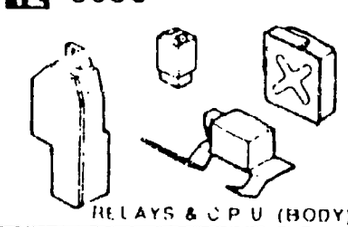

RELAYS & C P U (BODY)

11 6620



DOOR, PARKING LAMP & KICKDOWN SWITCHES

PICTORIAL INDEX

1 5000

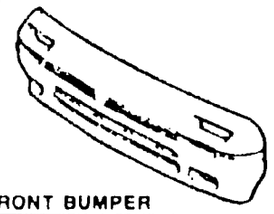

FRONT BUMPER

2 5005

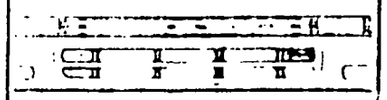

RADIATOR GRILLE

3 5010

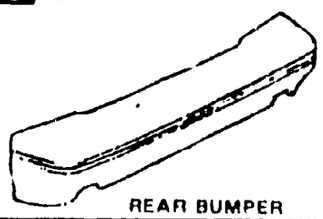

REAR BUMPER

4 5030

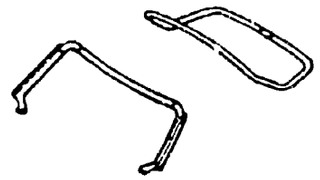

WINDOW MOULDINGS

5 5040



BODY MOULDINGS

6 5060

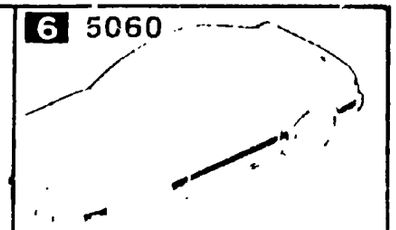

SIDE PROTECTORS

20 5840

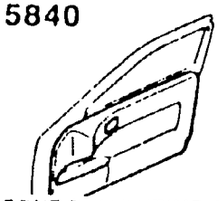

FRONT DOOR TRIMS & RELATED PARTS

21 6200 6230

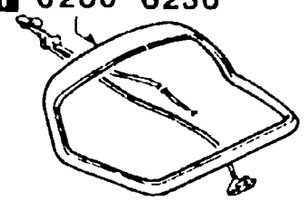

LIFT GATE MECHANISMS

22 6300

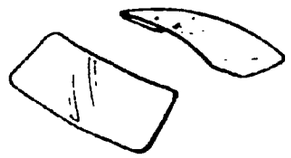

WINDOW GLASSES

23 6330

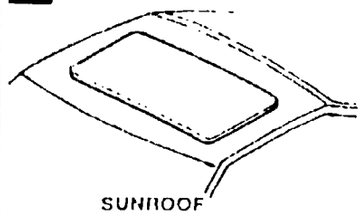

SUNROOF

24 7800



SPOILER & RELATED PARTS

7 5170

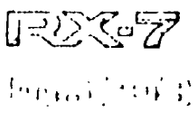

ORNAMENTS

19 5830

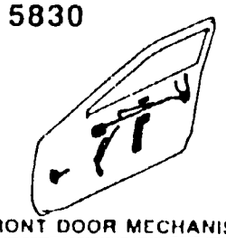

FRONT DOOR MECHANISMS

BODY (2/4)

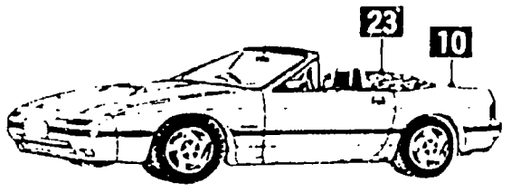

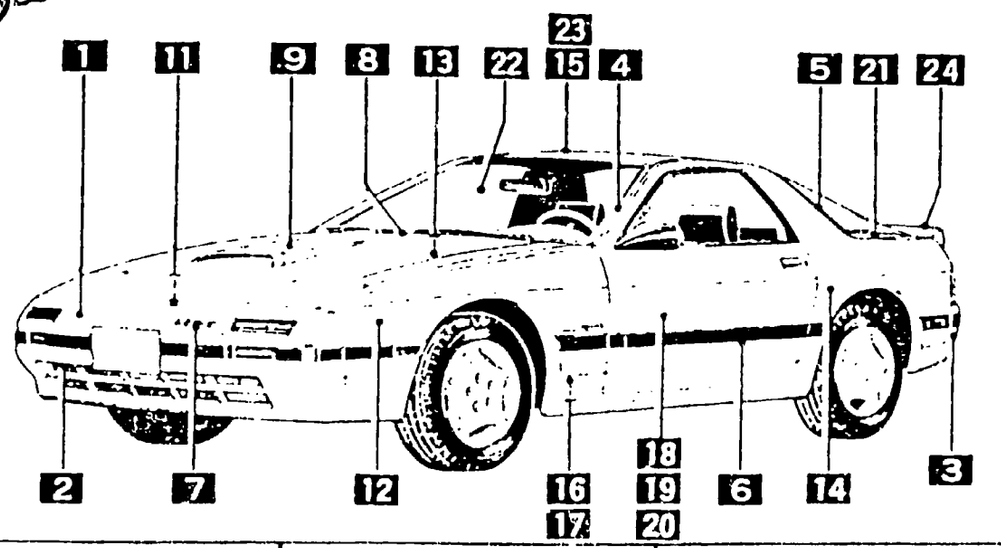

8 5180



COWL & EXTRACTOR GRILLES

18 5800

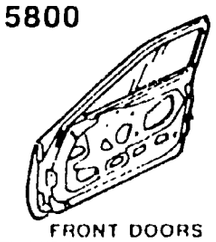

FRONT DOORS

9 5230

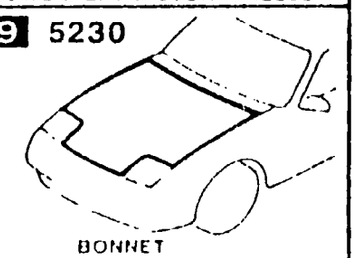

BONNET

17 5390

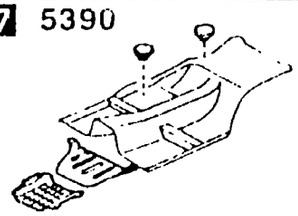

FLOOR ATTACHMENTS

10 5260



TRUNK LID

16 5370



BODY PANELS (FLOOR)

15 5360

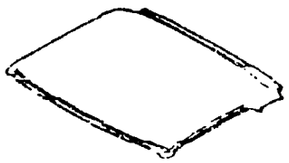

BODY PANELS (ROOF)

14 5340

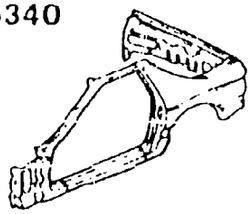

BODY PANELS (SIDE)

13 5330

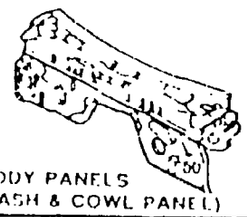

BODY PANELS (DASH & COWL PANEL)

12 5320

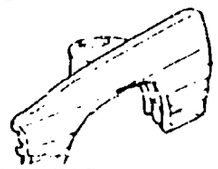

BODY PANELS (FENDER & WHEEL APRON)

11 5310

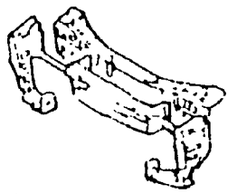

BODY PANELS (FRONT)

As this illustration is prepared as a general applicable to all models, some parts are not figured or specified. Items from the left listed on this parts chart.

PICTORIAL INDEX

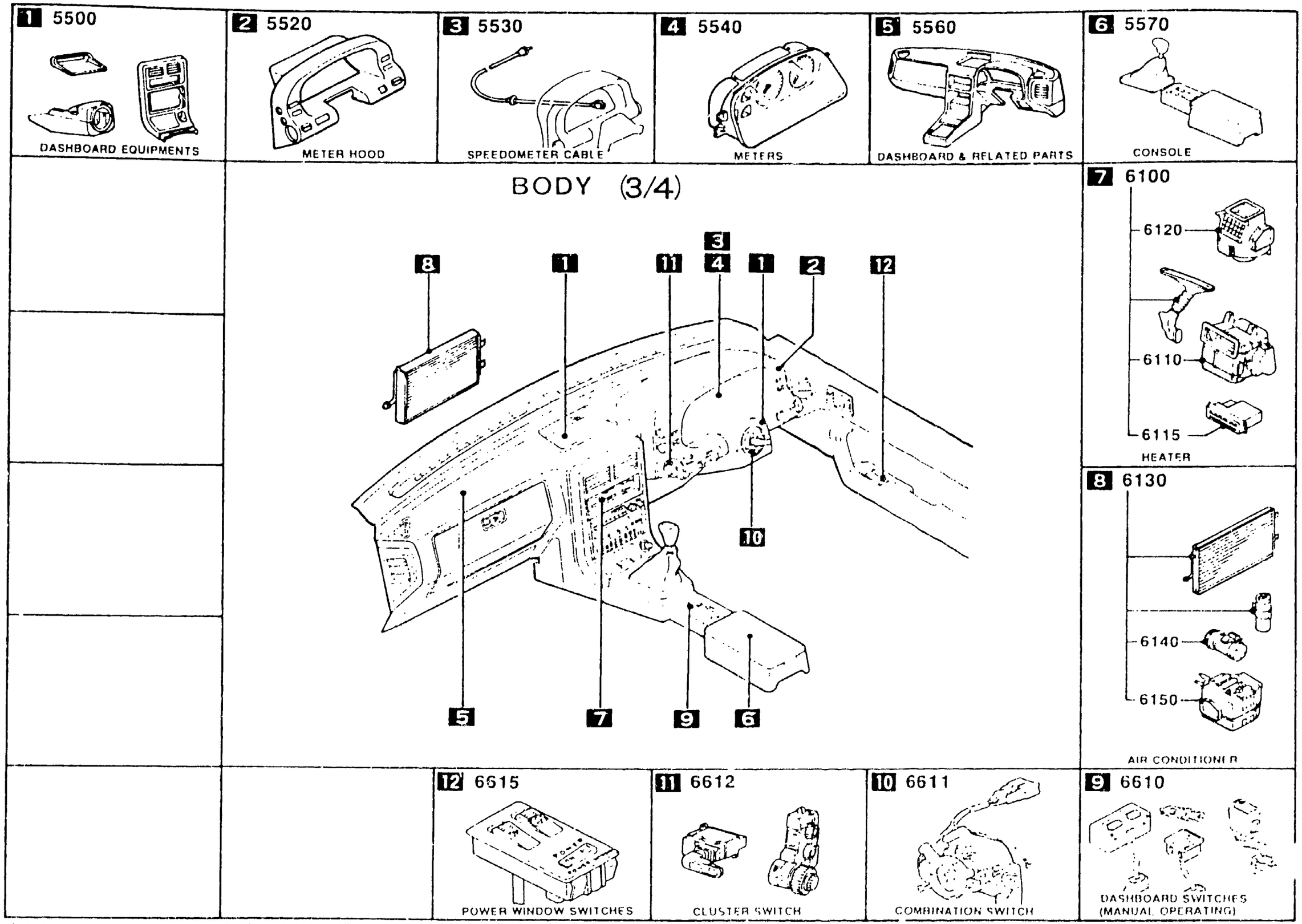

As this illustration is prepared to be applicable to all models, some parts are different in specifications from the parts listed in this parts catalog.

PICTORIAL INDEX

1 5580

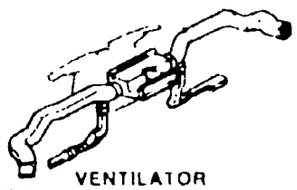

VENTILATOR

2 5700

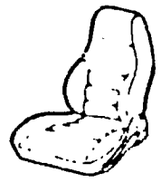

FRONT SEATS

3 5750

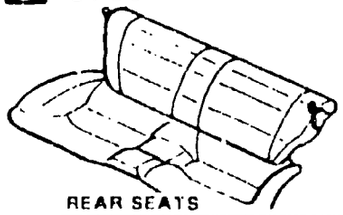

REAR SEATS

4 5790

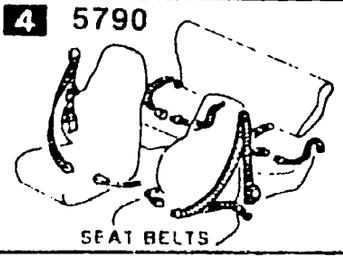

SEAT BELTS

5 6680

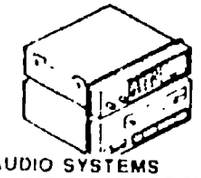

AUDIO SYSTEMS
(RADIO & TAPE DECK)

6 6682

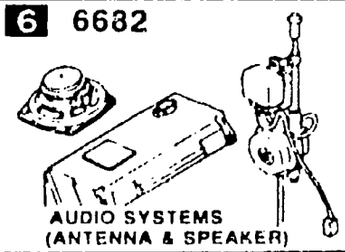

AUDIO SYSTEMS
(ANTENNA & SPEAKER)

BODY (4/4)

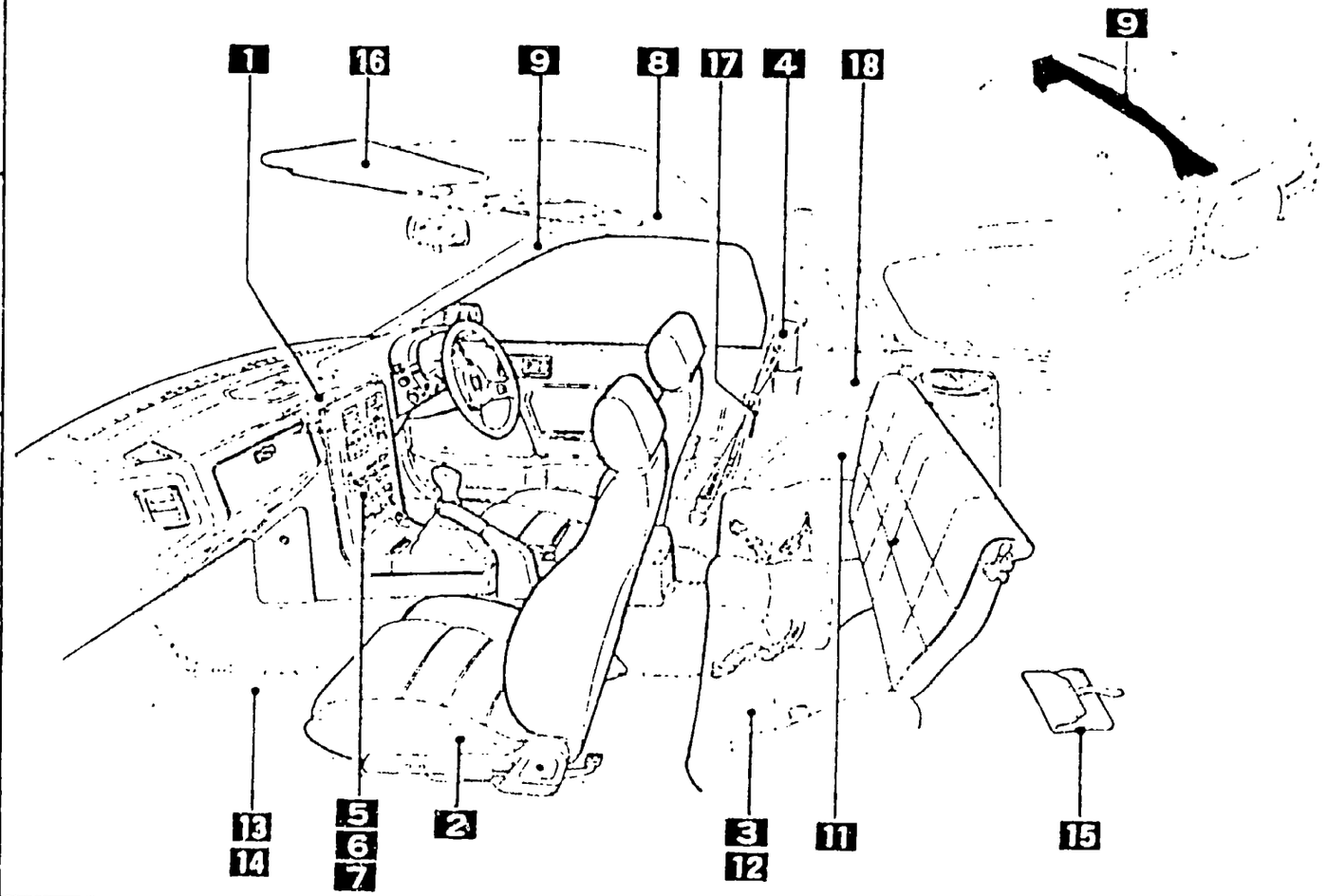

7 6684



AUDIO SYSTEMS
(NOISE SUPPRESSOR &
EARTH CORD)

8 6800



CEILING TRIMS

18 7250



REAR WINDOW GLASSES & TRIMS

9 6820

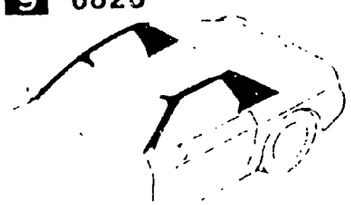

PILLAR TRIMS

17 6930

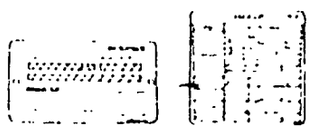

CAUTION PLATES & LABELS

10 6810

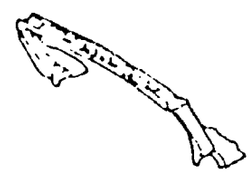

ROCKER BAR

16 6900



VISORS, ASSIST HANDLES & MIRRORS

15 6870



SERVICE TOOLS

14 6865

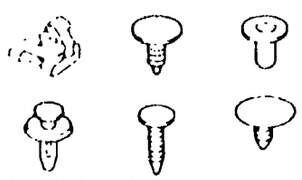

TRIM CLIPS & FASTENERS

13 6860

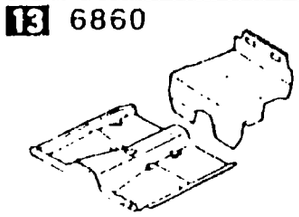

FLOOR MATS & PADS

12 6845

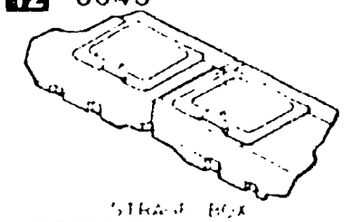

STRAP BOX

11 6840



TRIMS & SCUFF PLATES

MODEL IDENTIFICATION

MDL NO.	ENG*		T/M		BODY		ROOF		SUSP		DIFF		BRK		SUSP		SEAT		PERIOD		YEAR			TRIM LEVEL								VIN (CHASSIS #)	COMPLETE ASSEMBLY UNIT		
																																PART NUMBER		
	W/O TURBO	W/ TURBO	5 SPEED	AUTO	COUPE	CONV	NORM ROOF	SUNROOF	W/O AAS	W/ AAS	NORM	LIM SLIP	W/O ABS	W/ ABS	NORM	HARD	2 SEATER	2+2	FROM	TO	1986	1987	1988	BASE	LX PKG	SE	SPORT	GTU	GXL	TURBO	CONV	10TH ANNED		ENGINE	T/MISSION	CABIN
FB01	X		X		X		X		X		X		X		X		X		8/85	12/88	X	X	X	X		X							FC33*-100001-	N326-02-000	M582-03-000	FB01-07-000
FB02	X			X	X		X		X		X		X		X		X		8/85	12/88	X	X	X	X		X							FC33*-100001-	N327-02-000	BU17-19-090F	FB02-07-000
FB03	X		X		X			X	X		X		X		X		X		8/85	12/88	X	X	X		X	X							FC33*-100001-	N326-02-000	M582-03-000	FB03-07-000
FB04	X			X	X			X	X		X		X		X		X		8/85	12/88	X	X	X		X	X							FC33*-100001-	N327-02-000	BU17-19-090F	FB04-07-000
FB07	X		X		X			X		X		X	X			X	X		8/85	12/88	X	X	X						X				FC33*-100001-	N326-02-000	M582-03-000	FB07-07-000
FB08	X			X	X			X		X		X	X			X	X		8/85	12/88	X	X	X						X				FC33*-100001-	N327-02-000	BU17-19-090F	FB08-07-000
FB11	X		X		X			X		X		X	X			X		X	8/85	12/88	X	X	X						X				FC33*-100001-	N326-02-000	M582-03-000	FB07-07-000
FB12	X			X	X			X		X		X	X			X		X	8/85	12/88	X	X	X						X				FC33*-100001-	N327-02-000	BU17-19-090F	FB08-07-000
FB39	X		X		X		X		X		X		X		X			X	8/85	12/88	X	X	X	X		X							FC33*-100001-	N326-02-000	M582-03-000	FB01-07-000
FB40	X			X	X		X		X		X		X		X			X	8/85	12/88	X	X	X	X		X							FC33*-100001-	N327-02-00	BU17-19-090F	FB02-07-000
FB41	X		X		X			X	X		X		X		X				8/85	12/88	X	X	X		X	X							FC33*-100001-	N326-02-000	M582-03-000	FB03-07-000
FB42	X			X	X			X	X		X		X		X			X	8/85	12/88	X	X	X		X	X							FC33*-100001-	N327-02-000	BU17-19-090F	FB04-07-000
FB43	X		X		X		X		X		X		X			X	X		8/85	12/88	X	X	X				X	X					FC33*-100001-	N326-02-000	M582-03-000	FB01-07-000
FB47		X	X		X			X	X			X	X			X	X		2/86	12/88		X	X						X				FC33*-500001-	N332-02-000	R526-03-000	FB46-07-000
FB69	X		X		X			X	X		X		X			X	X		11/85	12/88	X	X	X				X	X					FC33*-100001-	N326-02-000	M582-03-000	FB03-07-000
FB55	X		X		X			X		X		X		X		X	X		6/86	12/88		X	X						X				FC33*-500001-	N326-02-000	M582-03-000	FB55-07-000
FB56	X			X	X			X		X		X		X		X	X		6/86	12/88		X	X						X				FC33*-500001-	N327-02-000	BU17-19-090F	FB56-07-000
FB57	X		X		X			X		X		X		X		X		X	6/86	12/88		X	X						X				FC33*-500001-	N326-02-000	M582-03-000	FB55-07-000

* 13B ENGINE.

MODEL IDENTIFICATION

MODEL NO.	ENG*		T/M		BODY		ROOF		SUSP		DIFF		BRK		SUSP		SEAT		PERIOD		YEAR			TRIM LEVEL									VIN (CHASSIS #)	COMPLETE ASSEMBLY UNIT		
																																	PART NUMBER		
	W/O TURBO	W/ TURBO	5 SPEED	AUTO	COUPE	CONV	NORM ROOF	SUNROOF	W/O AAS	W/ AAS	NORM	LIM SLIP	W/O ABS	W/ ABS	NORM	HARD	2 SEATER	2+2	FROM	TO	1986	1987	1988	BASE	LX PKG	SE	SPORT	GTU	GXL	TURBO	CONV	10TH ANNED		ENGINE	T/MISSION	CABIN
FB58	X			X	X			X		X		X		X		X		X	6/86	12/88		X	X						X				FC33*-500001-	N327-02-000	BU17-19-090F	FB56-07-000
FB61		X	X		X			X	X			X		X		X	X		6/86	12/88		X	X							X			FC33*-500001-	N332-02-000	R526-03-000	FB61-07-000
FB77	X		X		X		X		X			X	X			X	X		7/87	12/88			X				X	X					FC33*-600001-	N326-02-000	M582-03-000	FB01-07-000
FB78	X		X		X			X	X		X		X		X		X		7/87	12/88			X				X	X					FC33*-600001-	N326-02-000	M582-03-000	FB03-07-000
FB68	X		X			X			X		X		X		X		X		7/87	12/88			X							X			FC351-100001-	N338-02-000	M50N-03-000	FB67-07-000
FB79		X	X					X	X			X	X			X	X		2/88	12/88			X									X	FC33*-500001-	N332-02-000	R526-03-000	FB79-07-000

* 13B ENGINE.

MODEL IDENTIFICATION

COUPE

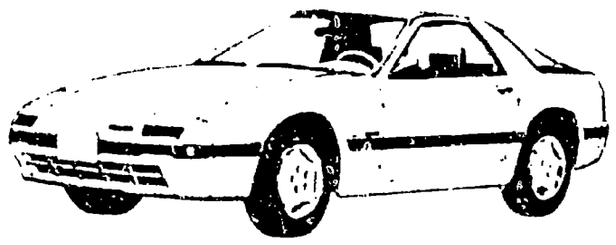

CONVERTIBLE

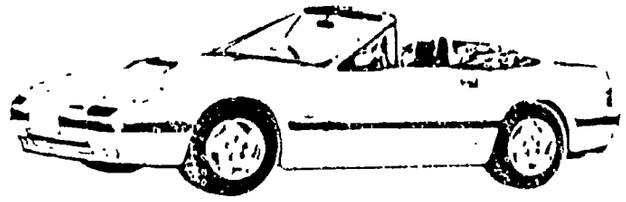

COMBINATION LIST OF BODY PAINTS AND INTERIOR COLORS

BODY PAINT		INTERIOR COLOR CODE						
NAME	CODE	COUPE				CONV.		EFFECTIVE DATE
ARCTIC SILVER METALLIC	J5		FD5	FD6		FD5	FD6	
TORONADE SILVER METALLIC	K8	FD2	FD5					
BRILLIANT BLACK	PZ	FD2	FD5			FD5		860402·
SUNRISE RED	RH	FD2	FD5			FD5		
CRYSTAL WHITE	UC				FD7			880215·
NOBLE WHITE	WY			FD6			FD6	
SATIN GOLD METALLIC	1A	FD2						
CLARET MICA	2H		FD5					870701·
SAPPHIRE BLUE METALLIC	5A		FD5	FD6			FD6	
PURE RED	NP		FD5					860402·
DOVER WHITE	WU	FD2	FD5	FD6				860402·
ROYAL MAROON METALLIC	3A	FD2	FD5					861225·

INTERIOR COLOR CODES

FD2 = RED
FD5 = GRAY
FD6 = BLUE
FD7 = BLACK

VIN BREAKDOWN

860402 FC33* -140427
861225 FC33* -526438
870701 FC33* -600001

VEHICLE IDENTIFICATION SYSTEM FOR RX-7

SERIES (1986～1988)

VIN (= Vehicle Identification Number) for RX-7 series (1986～1988 Year Model) consists of WMI (= World Manufacturer Identifier), VDS (= Vehicle Description Section) and VIS (= Vehicle Identification Section) VDS consisting of six alphanumeric characters denotes the "MODEL SERIES". VIS consisting of eight alphanumeric characters denotes the serial unit number of vehicle and is sequentially numbered within each VDS.

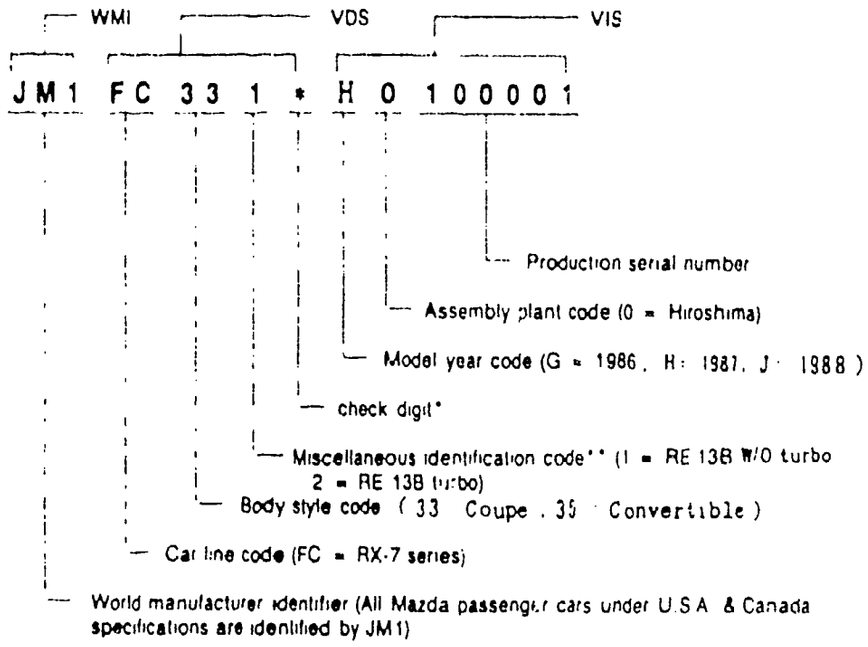

* Check digit is included as a VIN security feature to permit law enforcement verification of the authenticity of a suspected illegal VIN plate. This single digit number is determined, based upon a complex mathematical formula which is applied to each vehicle's VIN number.

** Miscellaneous Identification Code identifies major components such as engine, brake system, cab type, etc.

LOCATION OF VIN PLATE

The plate is attached to the top ledge of the dash panel under the bonnet (engine hood), refer to the illustration shown right.

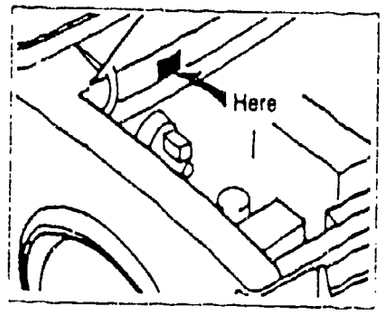

[NOTE]

If the VIN (chassis) reference number in the PCM (Parts catalog microfiche) appeared as

FC33 *-100001

the vehicle's VIN would be e.g. FC3311H0100001.

INSTRUCTIONS

HOW TO LOCATE PARTS

There are four approaches to locate parts as follows.

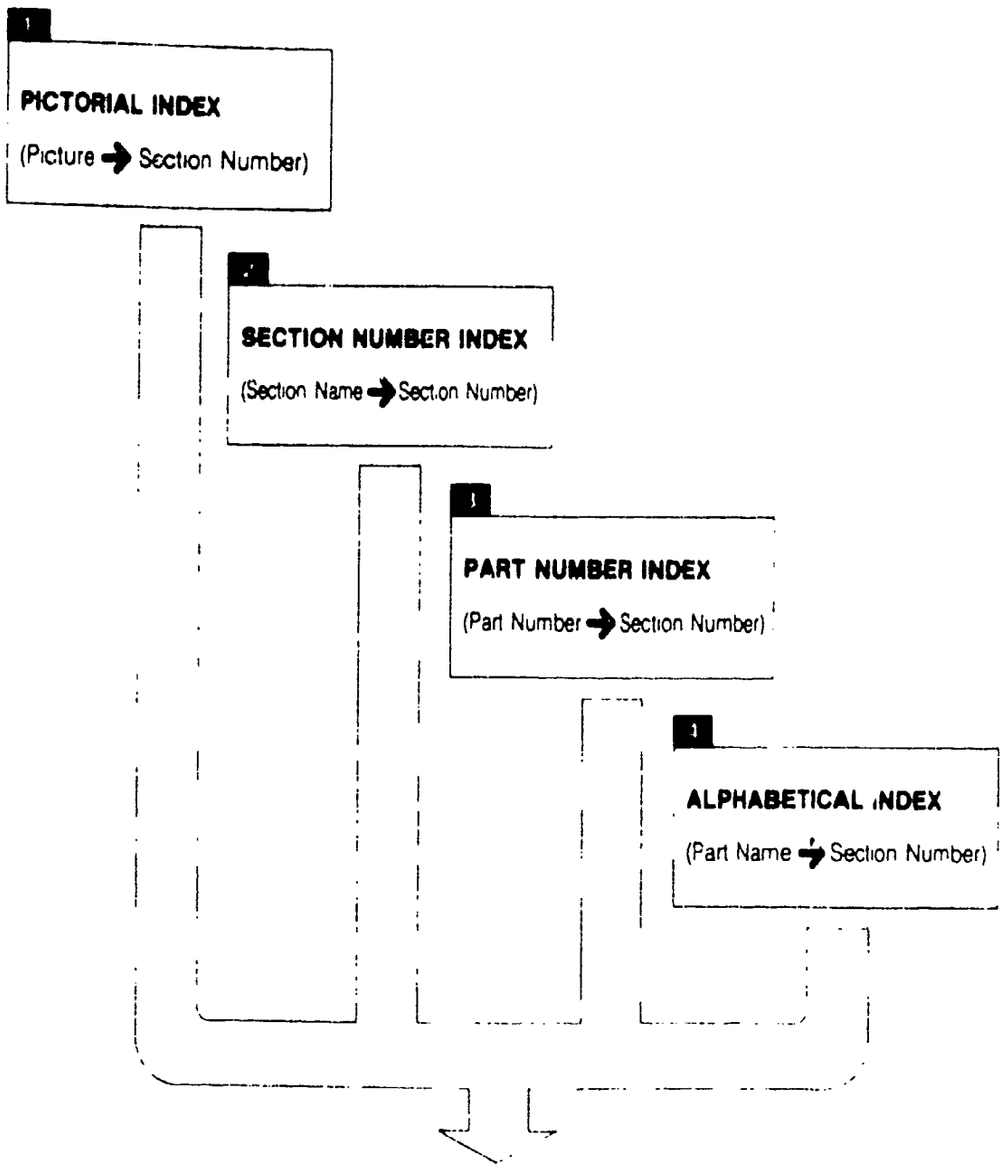

Open the catalog to the illustration page indicating the referred section number at the upper left corner of the page

Find the D-code indicated for the desired part in the illustration

All your necessary information on the desired part is found at the referred D-code that is located within the related text (s) following the illustration

IMPORTANT

If you are not sure which parts catalog compiled to cover the model you are researching, refer to **MODEL IDENTIFICATION** and/or **VEHICLE IDENTIFICATION SYSTEM** located at the very front part of the parts catalog

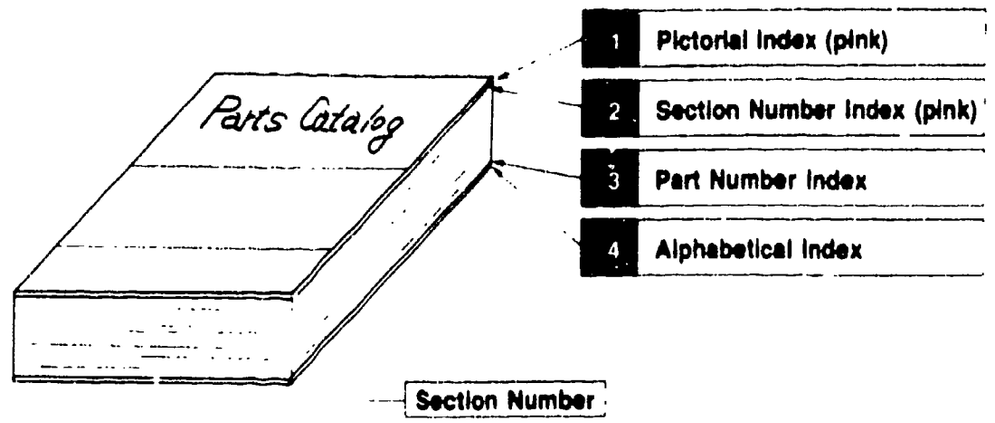

Section Number

The illustration and related text pages are compiled in numerical sequence by section number through the parts catalog
However, there is one exception the section number, "0900 key sets" is always located in the first part of Body group

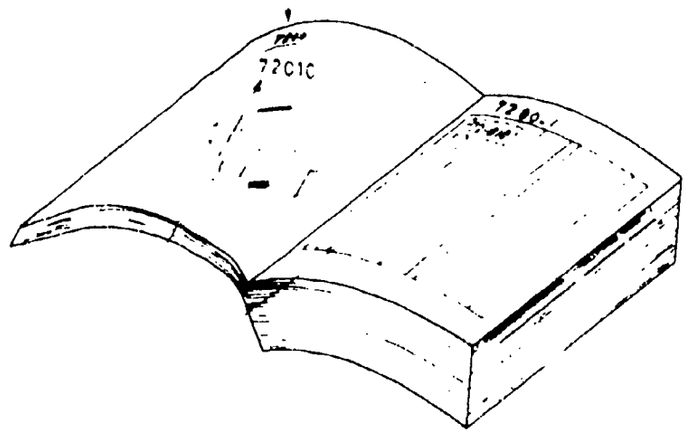

D-code

In the text the D-codes and the related information are listed in the alphabetical and numerical sequence by D-code within each section number

HOW TO INTERPRET THE ILLUSTRATION

In the example shown below, each item is interpreted as follows

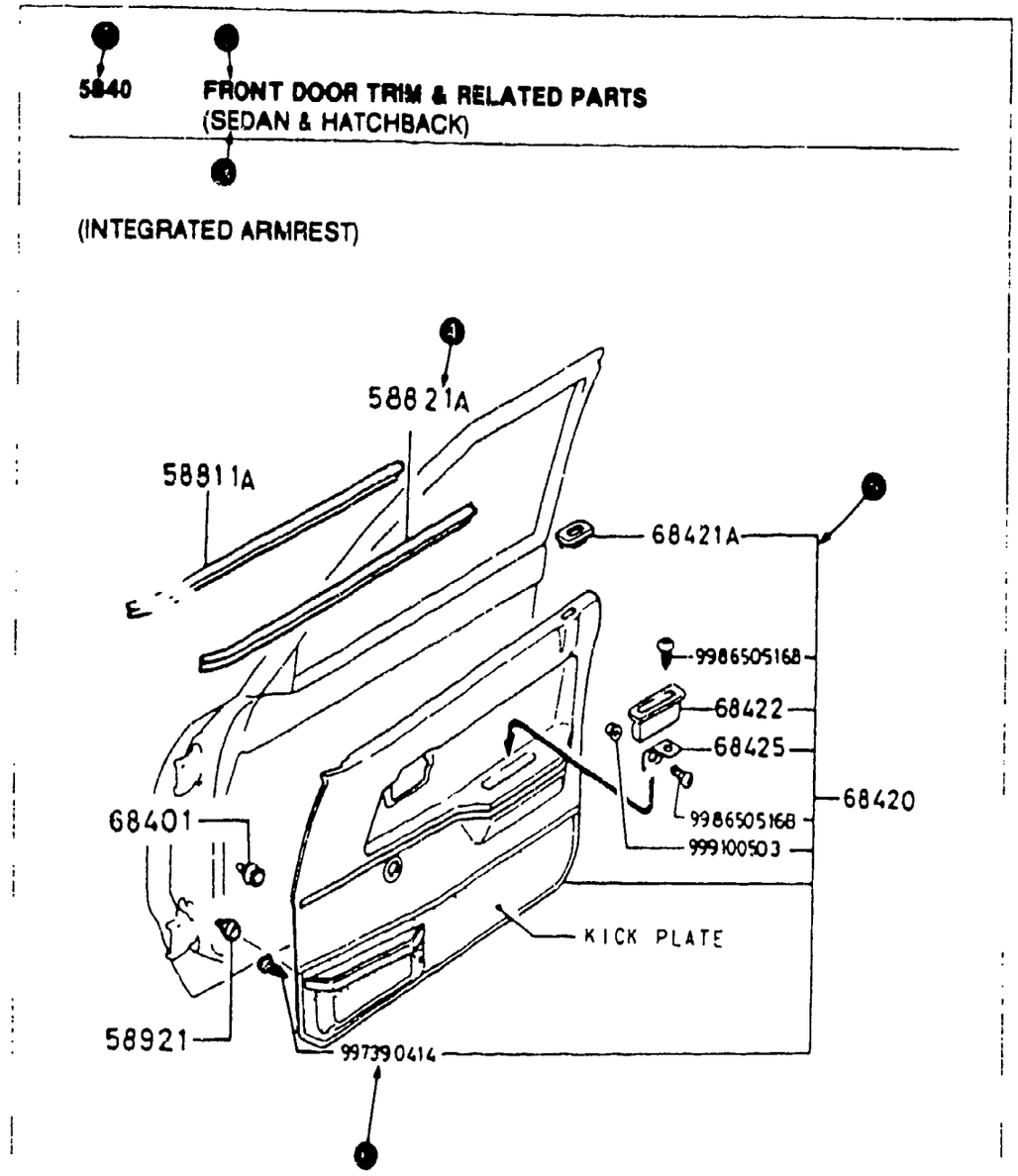

1 SECTION NUMBER
Each illustration is identified by Section Number which indicates the group of parts classified by function.

2 SECTION NAME

3 SECTION'S APPLICATION
The section's application is indicated in parentheses ( ) below the section name when the affected illustration/text is applicable to specific model, certain period of the production, etc.

4 D-CODE (KEY NUMBER)
The D-code consisting of five or six digits serves as a "KEY NUMBER" to co-ordinate a drawing with its detail information in the text.

5 RELATIONSHIP BETWEEN ASSEMBLY AND ITS COMPONENTS
The relationship between an Assembly and its Components is illustrated only by drawing.
The example shown left denotes that D-code 68420 includes D-codes, 68421A, 68422 and 68425 and standard part numbers, 998650516B, 999100503 and 997390414.

6 STANDARD PART NUMBER
Nine or ten-digit number which appears in the illustration is standard part number.
The standard part number indicated in the illustration instead of D-code does not appear in the related text.

HOW TO INTERPRET THE TEXT

In the example shown below, each item is interpreted as follows.

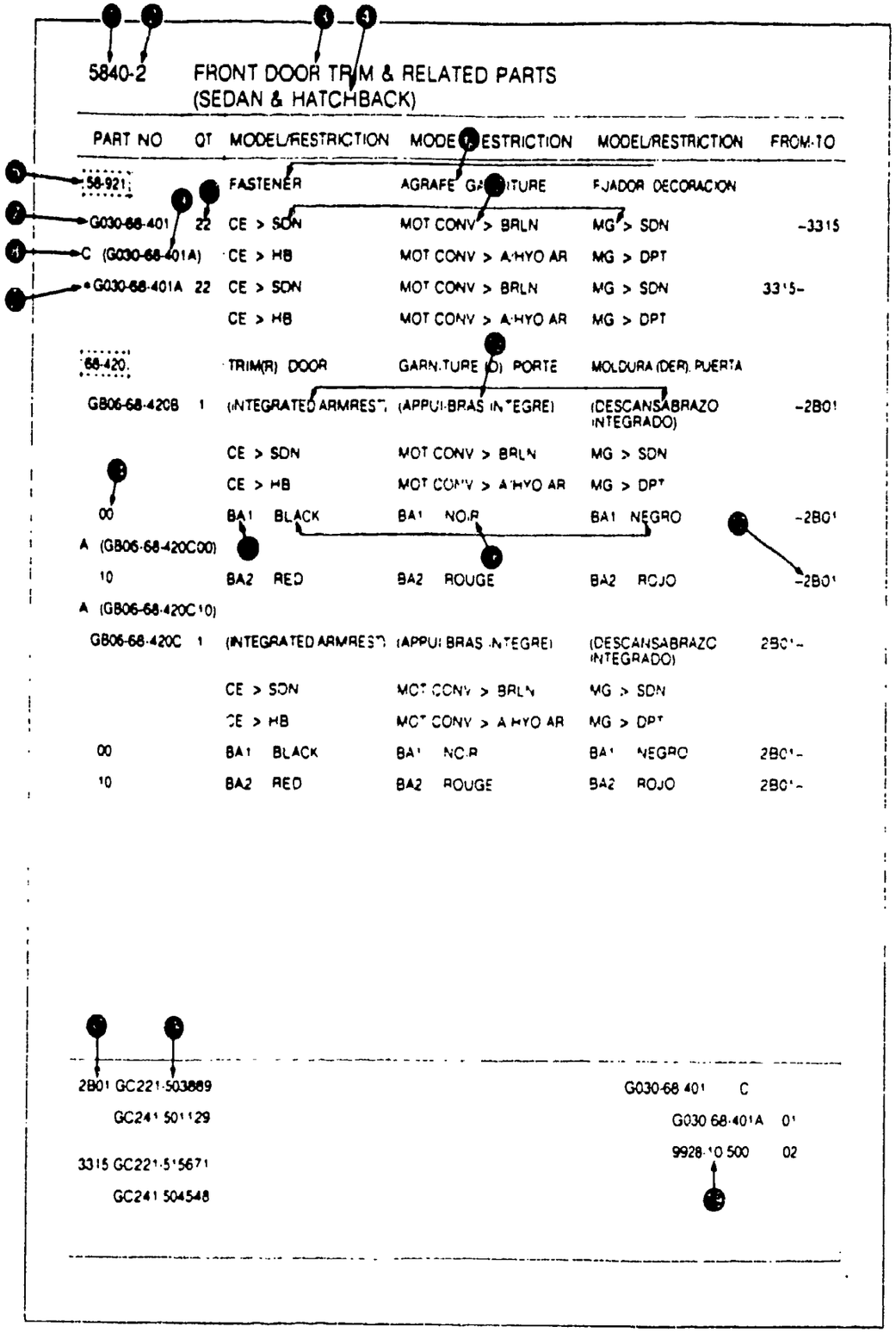

5840-2 FRONT DOOR TRIM & RELATED PARTS (SEDAN & HATCHBACK)

PART NO	QT	MODEL/RESTRICTION	MODEL/RESTRICTION	MODEL/RESTRICTION	FROM-TO
68-921		FASTENER	AGRAFE GARNITURE	FIJADOR DECORACION	
G030-68-401	22	CE > SDN	MOT CONV > BRLN	MG > SDN	-3315
C (G030-68-401A)		CE > HB	MOT CONV > A/HYO AR	MG > DPT	
G030-68-401A	22	CE > SDN	MOT CONV > BRLN	MG > SDN	3315-
		CE > HB	MOT CONV > A/HYO AR	MG > DPT	
68-420		TRIM(R) DOOR	GARNITURE (D) PORTE	MOLDURA (DER) PUERTA	
GB06-68-420B	1	(INTEGRATED ARMREST)	(APPUI-BRAS INTEGRE)	(DESCANSABRAZO INTEGRADO)	-2B01
		CE > SDN	MOT CONV > BRLN	MG > SDN	
		CE > HB	MOT CONV > A/HYO AR	MG > DPT	
00		BA1 BLACK	BA1 NOIR	BA1 NEGRO	-2B01
A (GB06-68-420C00)					
10		BA2 RED	BA2 ROUGE	BA2 ROJO	-2B01
A (GB06-68-420C10)					
GB06-68-420C	1	(INTEGRATED ARMREST)	(APPUI-BRAS INTEGRE)	(DESCANSABRAZO INTEGRADO)	2B01-
		CE > SDN	MOT CONV > BRLN	MG > SDN	
		CE > HB	MOT CONV > A/HYO AR	MG > DPT	
00		BA1 BLACK	BA1 NOIR	BA1 NEGRO	2B01-
10		BA2 RED	BA2 ROUGE	BA2 ROJO	2B01-

2B01 GC221-503889
GC241 501129

3315 GC221-515671
GC241 504548

G030-68-401 C
G030-68-401A 01
9928-10-500 02

❶ **SECTION NUMBER**

❷ **TEXT SEQUENCE NUMBER**
The number following a hyphen denotes the text sequence number within each section number

❸ **SECTION NAME**

❹ **SECTION'S APPLICATION**

❺ **D-CODE**
In the text, D-codes and the related information are listed in the alphabetic and numeric sequence by D-code within each section number

❻ **PART NAME**
Part name is described for each D-code in one through three languages out of four languages such as English, French, Spanish and German.
The indicated languages vary, depending upon the market which the parts catalog is applicable to.

❼ **PART NUMBER**
Under one D-code, if there are more than one part number due to the part change involved, the part numbers are listed in the sequence of the part production timing the early used part number is shown first and the later one follows it

❽ **INTERCHANGEABILITY CODE**
One-or two-digit alphabet appearing in the extrem left hand side of the text is an interchangeability code
This code indicates the nature of interchangeability between the two part numbers shown in the right with parentheses and above.

The following interchangeability codes have been currently used in the parts catalog

Code		Definition
A	One Way	A new part can be used in place of the former part but the former part cannot be used in place of the new part
A1	Both Way	A new part and the former part are fully interchangeable
C	Plus	A new part requires additional parts to be used in place of the former part
CG	Plus	A new part requires additions parts and modification work to be used in place of the former part
G	Plus	A new part requires modification work to be used in place of the former part
S	One Way Backward	The former part can be used in place of a new part but the new part cannot be used in place of the former part

SUPERSEDING PART NUMBER
When a part is changed and new part is interchangeable with the former part, the new part number as the superseding part is shown in parentheses right under the former (superseded) part number

NEW PART NUMBER IDENTIFICATION
An asterisk (*) denotes that the indicated part number has been added since the last microfiche edition (not the last paper edition)
The microfiche parts catalog is revised more frequently than the paper one

QUANTITY
This denotes the quantity of the part used under the indicated D-code within each section number

MODEL APPLICATION
Model application for each part number is described in one through three languages out of four languages such as English, French, Spanish and German

PART USAGE RESTRICTION
Part usage restriction is shown for factory installed option parts to indicate under what condition the part is installed.
This information is also described in one through three languages

COLOR CODE OF PART NUMBER
For color keyed parts, two-digit color code(s) appear(s) right under its basic part number consisting of nine or ten digits. The complete part number for color keyed parts consists of the basic part number (9 or 10 digits) and the color code (2 digits)

INTERIOR or PAINT CODE FOR VEHICLE
The applicable interior or paint code(s) for the vehicle is (are) indicated to each color code of part number

COLOR DESCRIPTION OF PART
A color description of the part is indicated to each part's color code in one through three languages

⑰ PART CHANGE DATE
When a part is added, changed or deleted, the effective date coded in four digits is shown as follows.

Example

2 B 0 1
- 2 → Year (The last digit of the year)
- B → Month → 1...Jan. 2. Feb. 3. Mar. 4..Apr. 5..May 6 .June 7 .Jul 8 Aug. 9 .Sept A Oct B. Nov C Dec
- 0 1 → Day

—2B01 Used up to 2B01
2B01— Used from 2B01
2B01—3315. Used from 2B01 to 3315

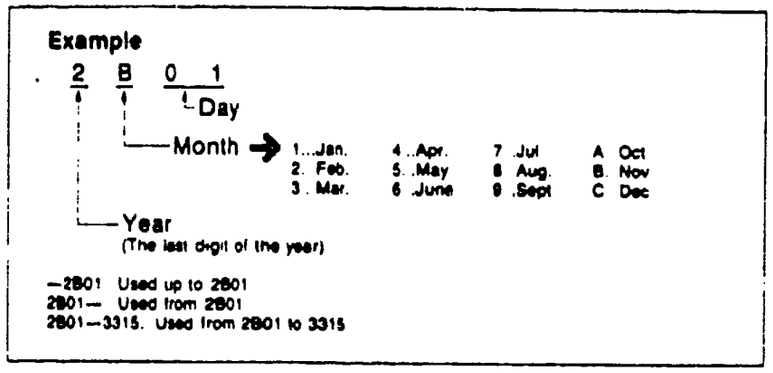

⑱ VIN NUMBER
The VIN number(s) related to the part change date is (are) shown in the footnote column, referring each date shown above

⑲ MULTIPLE SUPERSESSION
Shown as the example is a multiple supersession identified by the interchangeability codes "C" and "CG" one part can be replaced by more than one part
When the interchangeability codes "C" or "CG" appears in the text, a complete information on the multiple supersession will be shown in the footnote column of the same text

Example

G030-68-401	C	The left example should be interpreted as:
G030-68-401A	01	→ Part No. G030-68-401 can be replaced by Part Nos.
9928-10-500	02	G030-68-401A (1 pc.) and 99928-10-500 (2 pcs.).

HOW TO INTERPRET THE VIN APPLICATION

If the part change date appears as the example below:

PART NO.	QT	MODEL/RESTRICTION	MODEL/RESTRICTION	MODEL/RESTRICTION	FROM–TO
11-210 ROD, CONNECTING			BIELLE	BIELA	
E301-11-210	4	1100 1300	1100 1300	1100 1300	–3801
E301-11-210A	4	1100 1300	1100 1300	1100 1300	3801–4215
E301-11-210B	4	1100 1300	1100 1300	1100 1300	4215–

3801 BD1012 805812
BD1032 824340

4215 BD1012 816750
BD1032 830192

it should be interpreted:

① Part No. E301-11-210 is applicable to 1100 cc, from the initial production through BD1012 805911 (= 805912 minus 1) and 1300 cc, from the initial production through BD1032 824339 (= 824340 minus 1).

② Part No. E301-11-210A is applicable to 1100 cc, from BD1012 805912 through BD1012 816749 (= 816750 minus 1) and 1300 cc, from BD1032 824340 through BD1032 830191 (= 830192 minus 1).

③ Part No. E301-11-210B is applicable to 1100 cc, from and after BD1012 816750 and 1300 cc, from and after BD1032 83192.

Note:

The parts catalog often shows the catalog designation VIN instead of the actual VIN. For the correct interpretation for the catalog designation VIN, refer to explanation in "Vehicle Identification System" shown in the extreme right row of the last microfiche in the set.

HOW TO INTERPRET THE SUPERSESSION

If the supersession information appears as the example below:

	PART NO.	QT	MODEL/RESTRICTION	
	58-921 FASTENER			
Interchangeability Code	G030-68-401	22	1300 1500	Model Application for Part No. G030-68-401
Superseding Part Number	A (G030-68-401A) G030-58-401A	22	1300 1500	
	68-420 TRIM (R) DOOR			
Color Code	GB06-68-420A	1		
	00		BA1 BLACK	
Interchangeability Code	A (GB06-68-420800)			
	10		BA2 RED	
Superseding Part Number	A (GB06-68-420B10) GB06-68-420B	1		
	00		BA1 BLACK	
	10		BA2 RED	

it should be interpreted:

① Part No. G030-68-401A can be used in place of part No. G030-68-401.

② Part No. GB06-68-420800 can be used in place of part No. GB06-68-420A00.

③ Part No. GB06-68-420B10 can be used in place of part No. GB06-68-420A10.

HOW TO INTERPRET THE MODEL APPLICATION

If the model application and the usage restriction appear as the example below:

Watch the information in parentheses ( ) !!

3210 -1 STEERING COLUMN
(SEDAN)

	PART NO.		QT	MODEL/RESTRICTION	MODEL/RESTRICTION	MODEL/RESTRICTION
	32-071	BUSH		BUSELURE		BUJE
①	B001-32-071		1			
	32-100	SHAFT, ENGY. ABSORBER		COLONE TELESCOPIQUE		EJE, AMORTIQUAD
②	BA29-32-100A		1	(W/POWER STEERING) 1300 > MT 1500 > MT	(A/DIRECTION ASSISTEE) 1300 > B. V. MANU 1500 > B. V. MANU	(C/DIRCCION DE POTENCIA) 1300 > TM 1500 > TM

it should be interpreted:

① Part No. B001-32-071 is applicable to all the Sedans covered by this particular catalog.

② Part No. BA29-32-100A is applicable to Sedan 1300 Manual Trans. and Sedan 1500 Manual Trans in case they are equipped with the power steering.

MAZDA PART NUMBERING SYSTEM

Mazda Part Numbers are generally classified into three categories:
General Service Parts & Accessories, Standard Parts and Special Tools.

Note: Mazda Part Number consists of numeric and alphabet letters. In order to avoid the confusion due to similar characters among number and alphabet, alphabet letters I and O are not used in the part number. However, these letters are rarely used in 10th digit of the part number as an exception.

MAZDA GENERAL SERVICE PARTS & MAZDA ACCESSORIES

These part numbers basically consist of nine or ten digits. The 10th digit (if applicable) identifies the engineering change of the part. The color keyed part, however, consists of twelve digits since two-digit color code are added to nine or ten-digit number to identify its color.

EXAMPLE

Base Part No.

B A 0 1 - 6 0 - 3 5 0 A 0 0

① ② ③ ④ ⑤ ⑥ ⑦ ⑧ ⑨ ⑩ ⑪ ⑫

① ② ③ ④ : Vehicle Model No., Engine Type No. or Drive Train Type No.
⑤ ⑥ : Group No.
⑦ ⑧ ⑨ : Sequential Part No.
⑩ : Engineering Change Code
⑪ ⑫ : Color Code

Note: In case the engineering change is not made to a part, the 10th digit of the part number is left blank even for the color coded part, e.g.,

BA01-60-350 00
↑ Blank

MAZDA STANDARD PARTS

The Parts standardized in form and dimension such as Bolts, Nuts, Washers, Hoses, Disc Wheels, etc. are called Mazda Standard Parts.

All Mazda Standard Part Numbers are identified by "9" in the first digit. The numbering structure of Standard Parts varies, depending upon the type of part.

The following is just one example of Standard Part Number.

For further details and examples, refer to the wall chart, "LIST OF STANDARD PARTS".

EXAMPLE

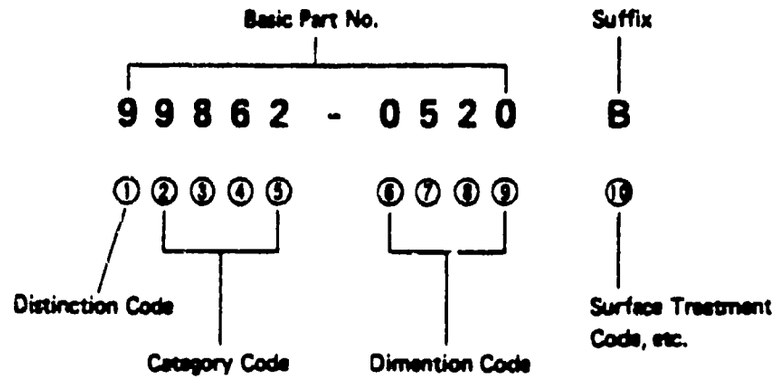

MAZDA SPECIAL TOOLS

In order to repair Mazda Vehicles, several special tools are required. These are called Mazda Special Tools. Mazda Special Tools are identified by the Part Number starting with "49".

EXAMPLE

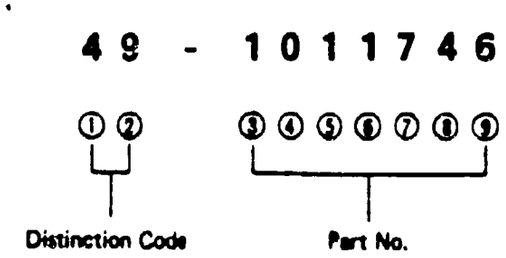

ABBREVIATION LIST

ABBREV.	MAY REPLACE
1ST	First
2ND	Second
3RD	Third
4TH	Fourth
4 SPD	Four Speed
4WS	Four Wheel Steering
4WD, 4X4	Four Wheel Drive
5TH	Fifth
5 SPD	Five Speed
A.A.	Anti Afterburn
A.A.S.	Auto Adjusting Suspension
ABS	Anti Lock Braking System
A/C	Air Conditioning
A.C.C.	Automatic Cruise Control
ACCEL.	Accelerator
A.C.V.	Air Control Valve
A.E.	Acoustical Equalizer
ALUM	Aluminum
ALL	Automatic Load Leveling
ALT.	Alternator
AMP.	Amplifier
ANT.	Antenna
APR.	April
ASSY.	Assembly
A/T	Automatic Tranamission
AUG.	August
AUTO.	Automatic
BAL.	Balance
BELT.	Beltline
BFGR	B. F. Goodrich
BRDG	Bridgestone
BRG.	Bearing
BRKT.	Bracket
BRN.	Brown
BLK.	Black
BLU.	Blue
BMPR.	Bumper
B.S.V.	Bleed Solenoid Valve
BULL.	Bulletin
BW	Black Wall
CAL.	California
CASS.	Cassette
CAT.	Category
Cd	Coefficient Of Drag
CD	Compact Disk
C.G.R.	Constant Gear Ratio
CHG.	Change
CHK.	Check
CHMBR	Chamber
CHN.	Chain
CIGAR.	Cigarette
CI	Coefficient Of Lift
CLPR	Caliper
CNVTR.	Converter
COMB.	Combination
COND.	Condenser
COMP.	Compressor
CONV.	Convertible
C/P	Cab Plus
C.S.D.	Cold Start Device
CSTG.	Coasting
CTR.	Center
CTRL.	Control
CV	Constant Velocity
CVR.	Cover
CYL.	Cylinder
DASH.	Dashboard
Db	Decibels
DEC.	December
DEF.	Defroster
DIAPH	Diaphragm
DIFF.	Differential
DNLP	Dunlop
DOHC	Double Overhead Camshaft
DSL.	Diesel
DTSS	Dynamic Tracking Suspension System
DX	Deluxe
ECAT	Electronically Controlled A/T
EGI	Electronic Gas Injection
EGR	Exhaust Gas Recirculation

ABBREVIATION LIST

ABBREV.	MAY REPLACE
ELEC.	Electric
ENG.	Engine
ETR	Electronically Tuned Radio
EXC.	Except
EXH.	Exhaust
EXT.	Extension
EQ	Equalizer
FEB.	February
FED.	Federal
F I.	Fuel Injection
FLEX	Flexible
F/LID	Fuel Lid
FRT.	Front
FRST	Firestone
FSTNR.	Fastener
G	Gram
GAS.	Gasoline
GDYR	Goodyear
GEN.	General
GOV.	Governor
GRN.	Green
GRY.	Gray
GSKT.	Gasket
H.A.C	High Altitude Compensator
HARN.	Harness
H/B	Hatchback
HD.	Head
H/DUTY	Heavy Duty
HDWE.	Hardware
HI. ALT.	High Altitude
HSG.	House, Housing
HTR.	Heater
IC	Integrated Circuit
ID	Inside Diameter
IGN.	Ignition
ILLUM.	Illumination, Illuminated
INCL	Includes
IND	Indicator
INFO.	Information
INST.	Instrument
INN.	Inner
INT.	Interior
INTMT.	Intermittent
INJ.	Injector, Injected
I.R.S.	Independent Rear Suspension
JAN.	January
JUL.	July
JUN.	June
KG	Kilogram
KM	Kilometer
KW	Kilowatt
(L). LT	Left
L=	Length
LCD	Liquid Crystal Display
L/B	Long Bed
LH	Left Hand
LPG	Liquid Petroleum Gas
L.S.D.	Limited Slip Differential
LWR	Lower
LX	Luxury
M	Metallic
MAR.	March
MC	Mica
MCHN	Michelin
MLDG.	Moulding, Mould
MM	Millimeter
MNFLD.	Manifold
MPX	Multiplex
MSTR.	Master
M/T	Manual Transmission
MTG.	Mounting
MTR	Manually Tuned Radio
N=	Number Of Teeth
N/A	Not Available
N/P	Notchback
NO.	Number
NORM.	Normal
NOV.	November

ABBREVIATION LIST

ABBREV.	MAY REPLACE
OCT.	October
OD	Outer Diameter
O/DRIVE	Overdrive
OHC	Overhead Camshaft
OPT.	Optional
O.S.	Oversize
OUT.	Outer
PANSC	Panasonic
PARK.	Parking
PB	Parking Brake
PCV	Positive Crankcase Ventilation
PIN.	Pinion
PKG	Package
PLR	Pillar
PROD.	Production
P/S	Power Steering
P/TRIM	Pillar Trim
PTH	Phillips Truss Head
PWR.	Power
QTR.	Quarter
QTY.	Quantity
(R), RT	Right
RH	Right Hand
RAD.	Radiator
REINF.	Reinforcement
REG.	Regular
REGUL.	Regulator
REL.	Release
REM.	Remote
RET.	Return
REV.	Reverse
RR.	Rear
RWL	Raised White Letters
S/B	Short Bed
S/ROD	Shift Rod
S/S	Supercession
SDN.	Sedan
SEP.	September
SERV.	Service
SLND.	Solenoid
SOHC	Single Overhead
SPEC.	Specification
SPEEDO.	Speedometer
SPG.	Spring
SPKR.	Speaker
SPRKT.	Sprocket
SRS	Supplemental Restraint System
STAB.	Stabilizer
STD.	Standard
STRG.	Steering
S/ROOF	Sunroof
SUSP.	Suspension
S/W	Station Wagon
SW.	Switch
SYNC.	Synchronizer
T=	Thickness
TEMP.	Temperature
THERMO.	Thermostat
TMG.	Timing
T/MISSION	Transmission
TRK.	Truck
T/LID	Trunk Lid
T/S	Touring Sedan
TTL	Twin Trapezoidal Links
TURBO	Turbocharged
UP.	Upper
U.S.	Undersize
VAC.	Vacuum
V.G.R.	Variable Gear Ratio
VPV	Variable Port Valve
VNL.	Vinyl
W=	Width
W/	With
W/P	Water Pump
WGN.	Wagon
WHL.	Wheel
W/O	Without
WHT.	White
W/SHIELD	Wind Shield, Screen Wind Screen
WTR.	Water
W/W	White Walls

1986-88 RX-7 ACCESSORIES

AERO

0000-86-325 - Wing Spoiler
F061-V4-920 -0F - Factory Spoiler

AIR CONDITIONER
Refer to Accy. Bulletin XA-1 for Air Conditioner information.

ALARM

0000-88-1901 - Electronic Shock Sensor
Refer to Accy. Bulletin XG-6 for Alarm information.

ARM REST
Refer to Accy. Bulletin XN-1 for replacement parts.

BATTERY

0000-80-126F
Refer to Accy. Bulletin XG-4 for Battery information.

BLOCK HEATER

0000-88-6600
Refer to Accy. Bulletin XG-5 for installation information.

CAR COVER

0000-88-092A - Evolution 3 Blue
0000-88-090 -LK - Lock Kit
Refer to Accy. Bulletin XG-8 for more Car Cover information.

CARGO COVER

FB01-V1-350 -1F - Red
FB01-V1-350 -5F - Blue
FB01-V1-350 -7F - Grey

CIGARETTE LIGHTERS

B001-66-252

CRUISE CONTROL

8AF1-66-340 - Coupe
8AF2-66-340 - Convertible
Refer to Accy. Bulletin XG-7 for more Cruise Control information.

DOOR EDGE GUARDS

0000-88-3199-BK - Black Universal Type

FLOOR MATS

0000-88-7688-05 - Gray Plush Mat
0000-88-7688-11 - Wine Plush Mat
0000-88-7688-50 - Blue Plush Mat
0000-88-7688-TA - 10th Anniversary Edition Mat

FOG LIGHTS

0000-88-500A-R6 - Clear Complete Kit
Refer to Accy. Bulletin XE-4 for Fog Light parts information.

FRONT MASK

0000-88-0588 - GTU, w/o Air Dam

MUD GUARDS

F045-V3-350 -0F - Front Set
F045-V3-351 -0F - Front Left
F045-V3-352 -0F - Front Right
F045-V3-360 -0F - Rear Set
F045-V3-361 -0F - Rear Left
F045-V3-362 -0F - Rear Right

PAINT
Refer to Accy. Bulletin XE-2 for Touch-Up Paint information.

RACKS

0000-88-1077 - Piper Ski Rack
0000-88-1067 - Sport Rack
0000-88-1200 - Ski Attachment
0000-88-1300 - Bike Attachment
0000-88-1400 - Sail/Surf Attachment
0000-88-1500 - Luggage Attachment

STEREO EQUIPMENT
Refer to Accy Bulletins XS-1, XS-2, and XS-3 for Audio information.

SUNROOF WIND DEFLECTOR

0000-86-3007

TIRES
Refer to Accy. Bulletins XE-1 for Tire information.

WHEEL LOCKS

0000-88-120C - Wheel Lock Set
0000-88-120C-BP - Lock Blister Pack
Refer to Accy. Bulletin XE-5 for more Wheel Lock information.

SECTION INDEX -- BODY

STARTING LOCATION	SECT NO	SECTION NAME
3 - C 3	6682	AUDIO SYSTEMS (ANTENNA & SPEAKER)
3 - F 3	6684	AUDIO SYSTEMS (NOISE SUPPRESSOR & GROUND CORD)
3 - G 3	6700	WIRING HARNESSES (FRONT & REAR) (COUPE) (W O ANTI-LOCK BRAKE SYSTEM)
3 - H 3	6700A	WIRING HARNESSES (FRONT & REAR) (COUPE) (ANTI-LOCK BRAKE SYSTEM)
3 - I 3	6700B	WIRING HARNESSES (FRONT & REAR) (CONVERTIBLE)
3 - J 3	6701	WIRING HARNESSES (ENGINE & T MISSION) (COUPE) (W O ANTI-LOCK BRAKE SYSTEM)
3 - K 3	6701A	WIRING HARNESSES (ENGINE & T MISSION) (COUPE) (ANTI-LOCK BRAKE SYSTEM)
3 - L 3	6701B	WIRING HARNESSES (ENGINE & T MISSION) (CONVERTIBLE)
3 - M 3	6702	WIRING HARNESSES (DASHBOARD) (COUPE) (W O ANTI-LOCK BRAKE SYSTEM)
3 - N 3	6702A	WIRING HARNESSES (DASHBOARD) (COUPE) (ANTI-LOCK BRAKE SYSTEM)
3 - C 4	6702B	WIRING HARNESSES (DASHBOARD) (CONVERTIBLE)
3 - D 4	6703	WIRING HARNESSES (DOOR, FLOOR CEILING)
3 - E 4	6704	WIRING HARNESS CLAMPS
3 - G 4	6720	WINDSHIELD WASHER
3 - I 4	6730	WINDSHIELD WIPERS
3 - J 4	6740	WIPER MOTOR COMPONENTS (FRONT)
3 - K 4	6750	WINDOW WIPER & WASHER (REAR) (COUPE)
3 - L 4	6760	WINDOW WIPER MOTOR COMPONENTS (REAR) (COUPE)
3 - M 4	6800A	CEILING TRIMS (COUPE)
3 - N 4	6800AB	CEILING TRIMS (CONVERTIBLE)
3 - C 5	6810	ROLLBAR (CONVERTIBLE)
3 - D 5	6820A	PILLAR TRIMS (COUPE)
3 - E 5	6820AA	PILLAR TRIMS (CONVERTIBLE)
3 - F 5	6840A	TRIMS & SCUFF PLATES (COUPE)
3 - J 5	6840AB	TRIMS & SCUFF PLATES (CONVERTIBLE)
3 - K 5	6845	STORAGE BOX (2-SEATER)
3 - L 5	6860A	FLOOR MATS & PADS (COUPE) (W O TURBO)
3 - C 6	6860AA	FLOOR MATS & PADS (COUPE) (TURBO)
3 - E 6	6860AB	FLOOR MATS & PADS (CONVERTIBLE)
3 - G 6	6865A	TRIM CLIPS & FASTENERS (COUPE)
3 - H 6	6865AA	TRIM CLIPS & FASTENERS (CONVERTIBLE)
3 - J 6	6870	SERVICE TOOLS
3 - C 7	6900A	VISORS, ASSIST HANDLES & MIRRORS
3 - H 7	6930	CAUTION PLATES & LABELS
3 - J 7	7250	QUARTER WINDOW & TRIMS
3 - K 7	7800	SPOILERS & RELATED PARTS
3 - L 7	7900	ACCESSORIES-CONSOLE LID

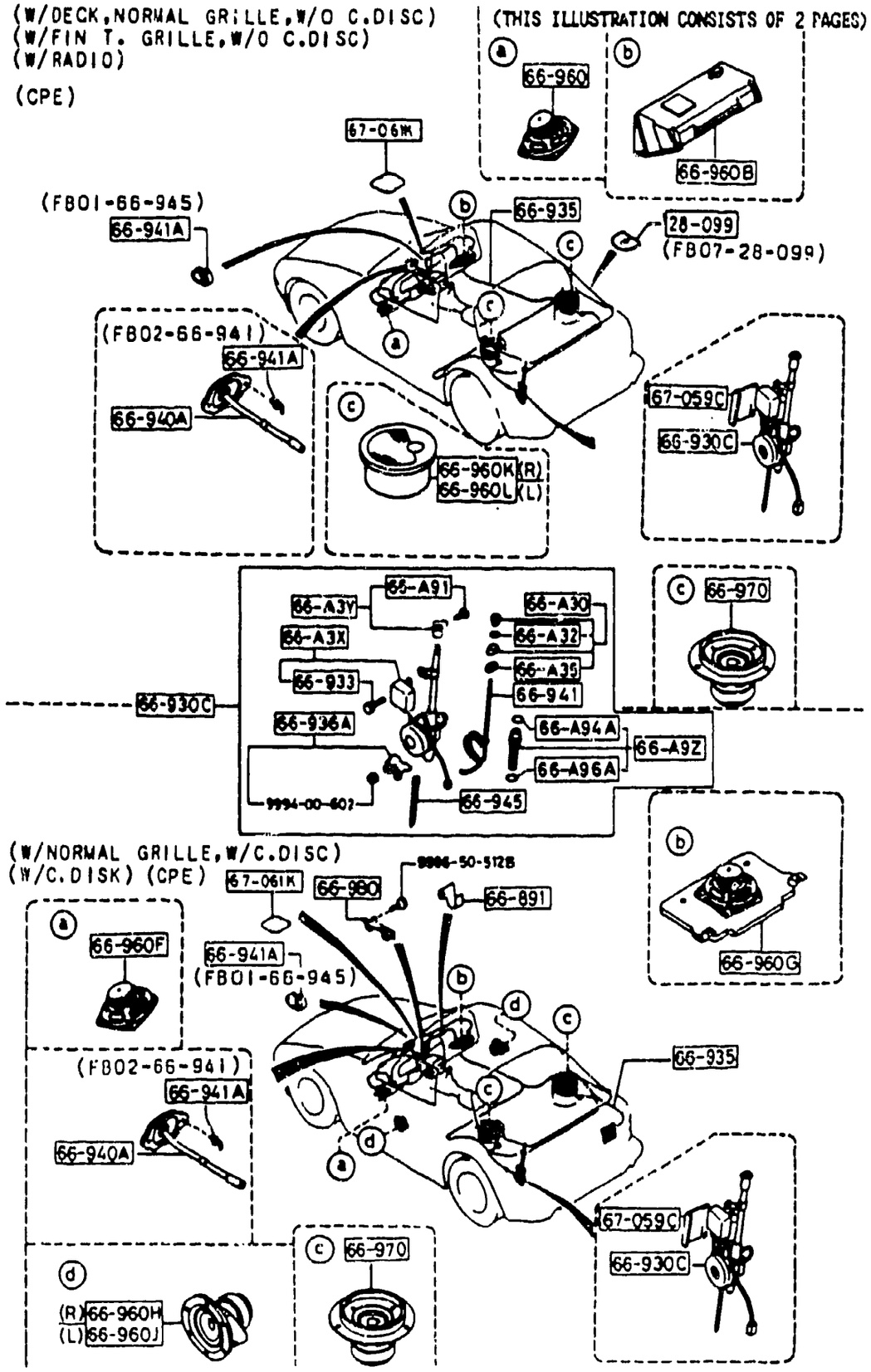
(W/DECK,NORMAL GRILLE,W/O C.DISC)
(W/FIN T. GRILLE,W/O C.DISC)
(W/RADIO)
(CPE)
(THIS ILLUSTRATION CONSISTS OF 2 PAGES)
66-960
66-960B
67-06W
66-935
28-099
(FB07-28-099)
(FB01-66-945)
66-941A
(FB02-66-941)
66-940A
66-960K(R)
66-960L(L)
67-059C
66-930C
66-A91
66-A3Y
66-A3X
66-933
66-936A
66-A30
66-A32
66-A35
66-941
66-A94A
66-A96A
66-A9Z
66-945
9994-00-602
66-970
(W/NORMAL GRILLE,W/C.DISC)
(W/C.DISK) (CPE)
67-061K
66-980
9986-50-5128
66-891
66-960F
66-960G
(R)66-960H
(L)66-960J

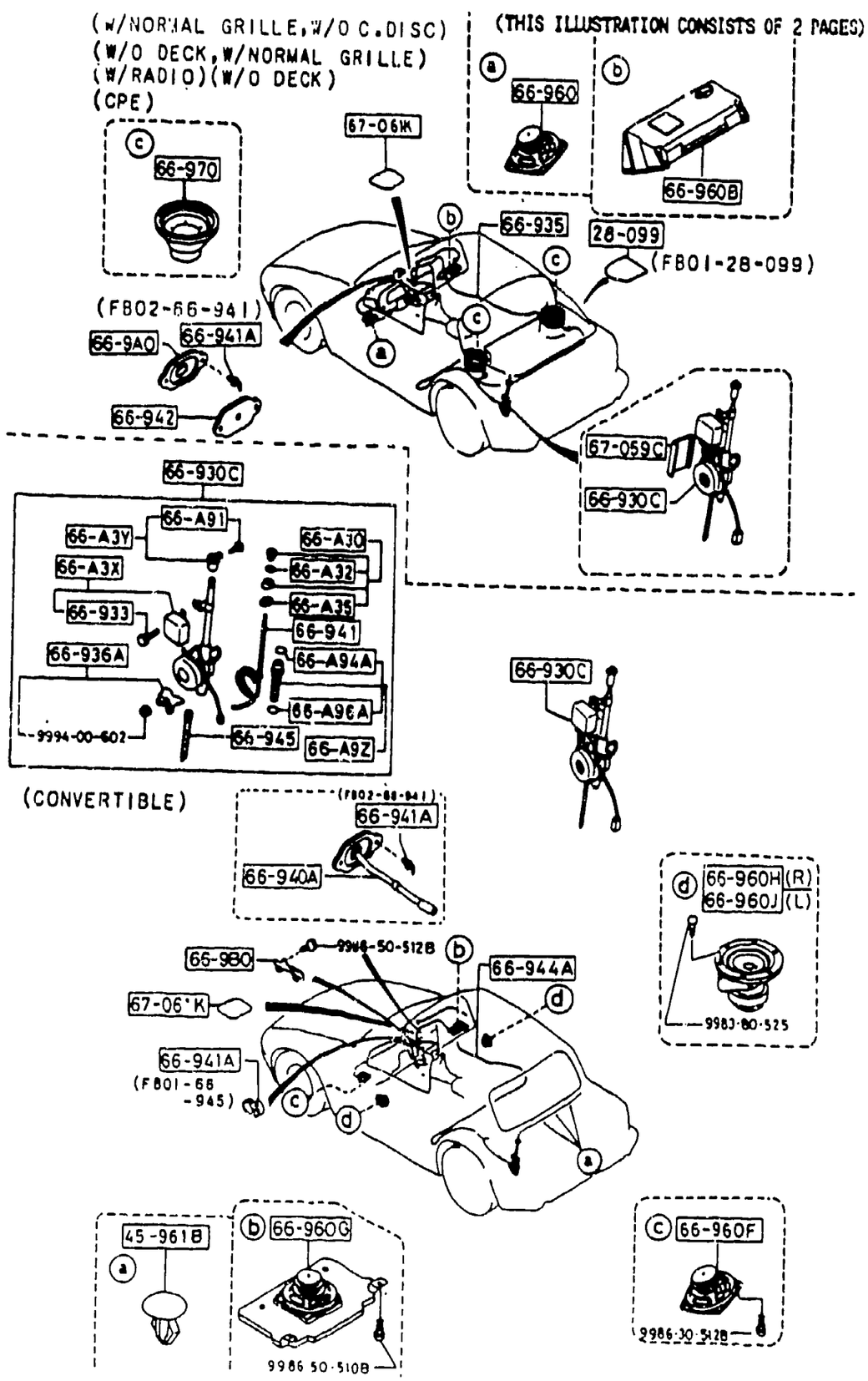
(W/NORMAL GRILLE,W/O C.DISC)
(W/O DECK,W/NORMAL GRILLE)
(W/RADIO)(W/O DECK)
(CPE)
(THIS ILLUSTRATION CONSISTS OF 2 PAGES)
66-960
66-960B
66-970
67-06W
66-935
28-099
(FB01-28-099)
(FB02-66-941)
66-940A
66-941A
66-942
66-930C
67-059C
66-A91
66-A3Y
66-A3X
66-933
66-936A
66-A30
66-A32
66-A35
66-941
66-A94A
66-A96A
66-A9Z
66-945
9994-00-602
(CONVERTIBLE)
(FB02-66-941)
66-941A
66-940A
66-980
9986-50-5128
66-944A
67-06*K
66-941A
(FB01-66-945)
66-960H(R)
66-960J(L)
9983-80-525
45-961B
66-960G
66-960F
9986-50-5108
9986-30-5128

SEE ILLUSTRATION/S AT FRAME 3 - C 3

ITEM NO.	D-CODE	DESCRIPTION	PART NO	QTY	MODEL/DESCRIPTION	REMARKS
	28 099	PAD, REAR SUSPENSION	FB01-28-099	2	W/O C.D. W/ NORMAL GRILLE	5818-5901
				4	W/O C.D. W/ NORMAL GRILLE	5901-
			FB07-28-099	1	W/O C.D. W/ FINE GRILLE	5818-5901
				2	W/O C.D. W/ FINE GRILLE	5901-
	45 961B	CAP	H002-45-961	3	CONV.	
	66 891	CLIP	FB12-66-9B0	1	W/ C.D.	-5A25
				2	W/ C.D.	5A25-6801
	66 930C	ANTENNA, MOTOR-RADIO	0000-81-9301	1	CONV.	
			0000-81-930A	1	COUPE	
	66 933	SCREW, ANTENNA	FB01-66-A92	1		
	66 935	FEEDER-ANTENNA	FB67-66-940B	1	CONV. W/O C.D.	
			FB68-66-940B	1	CONV. W/ C.D.	
			FB12-66-940A	1	COUPE W/O C.D.	
			FB11-66-940B	1	COUPE W/ C.D.	
	66 936A	BRACKET, MOTOR-ANTENNA	FB01-66-A9X	1		
	66 940A	FEEDER & COVER	FB02-66-940B	1		
	66 941	POLE, ANTENNA	0000-66-A901	1		
	66 941A	CLIP	FB02-66-941	2		
			FB01-66-945	1		
	66 942	COVER, SOUND PROOF	FB02-66-942A	1	W/O CASS.	
	66 945	PIPE	FB01-66-A9Y	1		
	66 960	SPEAKER, LOUD-FRONT	0000-81-56SP-01	1	W/ RADIO	
	66 960B	SPEAKER, BOX & AMPLIFIER	0000-81-56BX-01	1	W/ RADIO	
	66 960F	SPEAKER (R), LOUD-FRONT	0000-81-1022	1	W/ C.D.	
	66 960G	SPEAKER (L), LOUD-FRONT	0000-81-1023	1	W/ C.D.	
	66 960H	SPEAKER (R), LOUD-DOOR	0000-81-6021	1	W/ C.D.	
	66 960J	SPEAKER (L), LOUD DOOR	0000-81-6022	1	W/ C.D.	
	66 960K	SPEAKER (R), LOUD-RR.	0000-81-5612-01	1	W/O C.D.	
	66 960L	SPEAKER (L), W/ BOX & AMPLIFIER	0000-81-5613-01	1	W/O C.D.	
	66 970	SPEAKER, LOUD-REAR	0000-81-5217-01	2	W/O CASS. W/ NORM. GRILLE	
			0000-81-1024	2	W/ C.D W/ NORM. GRILLE	
			0000-81-5622-01	2	W/ CASS W/ NORM. GRILLE W/O C.D.	
	66 9A0	COVER, FEEDER-ANTENNA	FB01-66-9A0A	1	W/O CASS.	

5818 FC33* -100109
5901 FC33* -102044
5A25 FC33* -112370
6801 FC33* -507386

6682-3 AUDIO SYSTEMS (ANTENNA & SPEAKER)

SEE ILLUSTRATION/S AT FRAME 3 - C 3

ITEM NO.	D-CODE	DESCRIPTION	PART NO.	QTY	MODEL/DESCRIPTION	REMARKS
	66 9B0	BRACKET, CORD-AUDIO	FB11-66-9B0	1	W/ C.D.	-6801
	66 A30	NUT, MOUNTING-ANTENNA	FB01-66-A30	1	COUPE	
			FB67-66-A30	1	CONV.	
	66 A32	O-RING, MOUNTING-ANTENNA	FB01-66-A32	1		
	66 A35	PAD, MOUNTING-ANTENNA	FB01-66-A35	1	COUPE	
			FB67-66-A35	1	CONV.	
	66 A3X	RELAY, MOTOR-ANTENNA	FB01-66-A3X	1	COUPE	
			HE02-66-A3X	1	CONV.	
	66 A3Y	PLATE, EARTH-MOTOR ANTENNA	FB01-66-A3Y	1	COUPE	
			FB67-66-A3Y	1	CONV.	
	66 A91	SCREW, EARTH PLATE-ANTENNA	FB01-66-A91	1		
	67 059C	PAD, PROTECTOR	G001-67-059	1	COUPE	
	67 061K	PAD, PROTECTOR	G001-67-061	1		

6801 FC33* -507386

6684-1 AUDIO SYSTEMS (NOISE SUPPRESSOR & GROUND CORD)

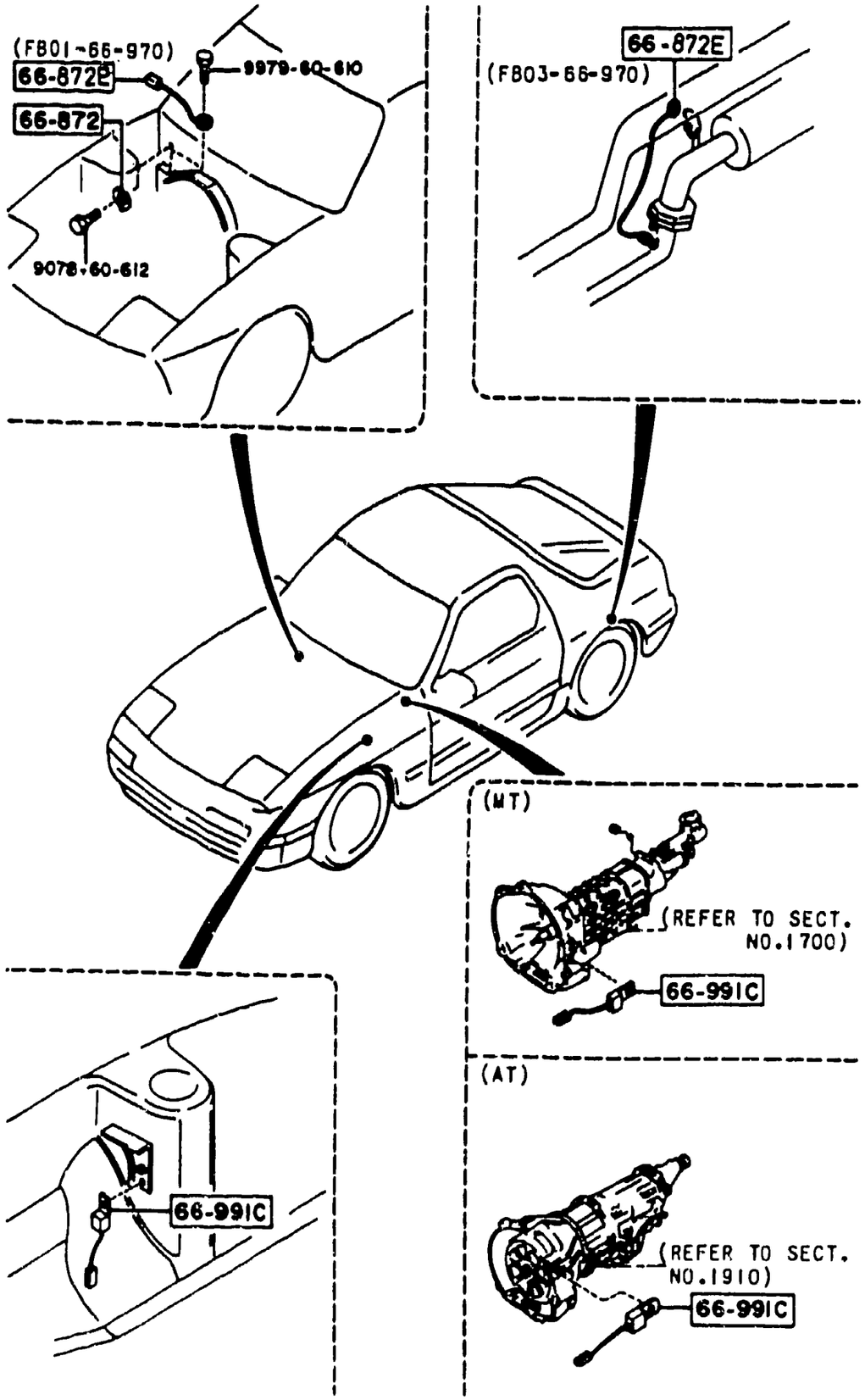

ITEM NO.	D-CODE	DESCRIPTION	PART NO.	QTY	MODEL/DESCRIPTION	REMARKS
	66 872	TAB, EARTH	FB01-66-994A	1		
	66 872E	CORD, GROUND	FB01-66-970	1	T/MISSION CASE - DASHBOARD	
			FB03-66-970	1	EXHAUST PIPE - BODY	
	66 991C	CONDENSER	FB01-66-991B	2		

6700-1 WIRING HARNESSES (FRONT & REAR) (COUPE) (W/O ANTI-LOCK BRAKE SYSTEM)

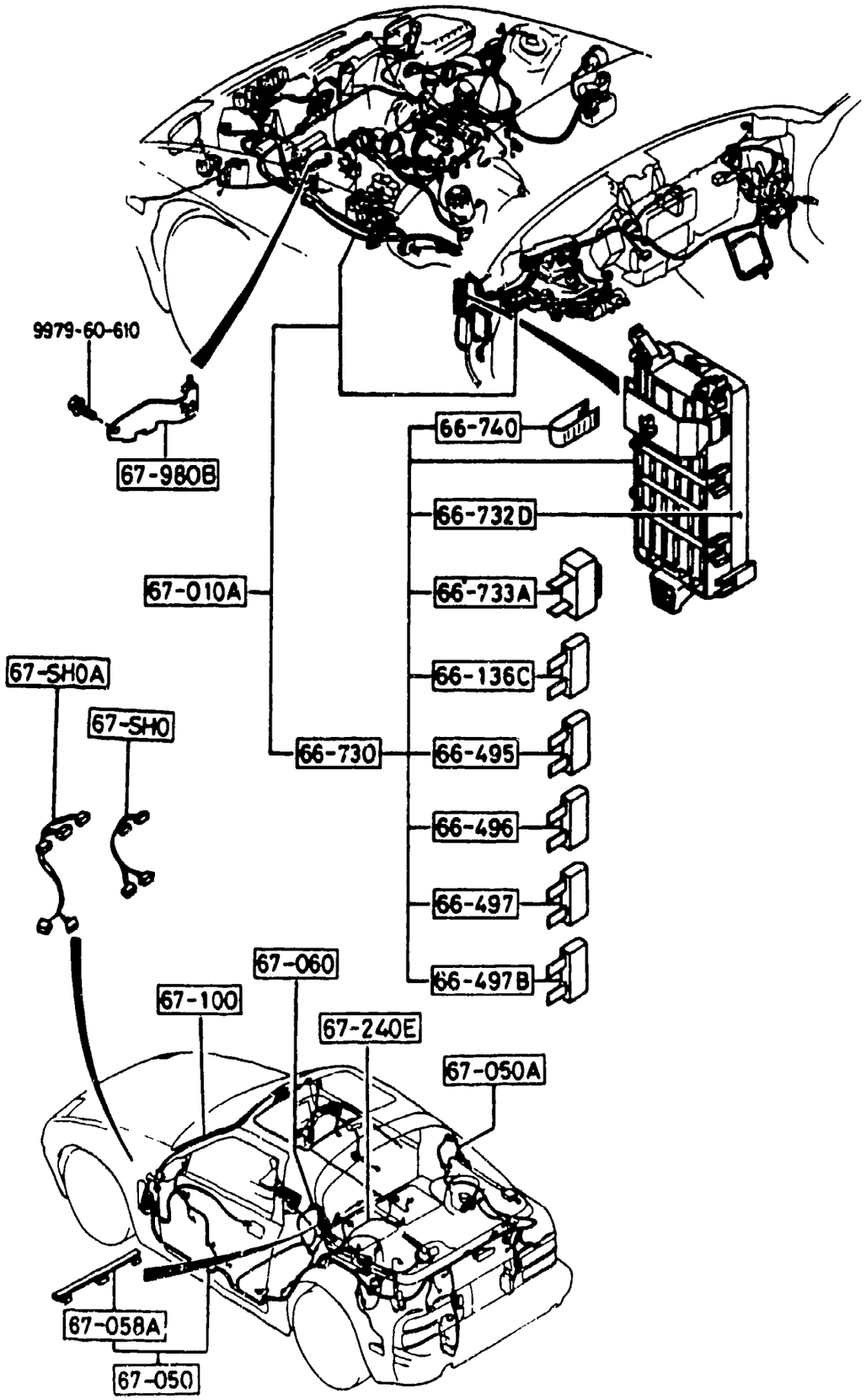

ITEM NO.	D-CODE	DESCRIPTION	PART NO.	QTY	MODEL/DESCRIPTION	REMARKS
	66 136C	FUSE (7.5A)	9970-51-107	2		
	66 495	FUSE (10A)	9970-51-110	6		
	66 496	FUSE (15A)	9970-51-115	7		-6625
				8		6625-
	66 497	FUSE (20A)	9970S-1120	3		
	66 497B	FUSE (30A)	9970-51-130	1		
	66 730	BLOCK, FUSE	FB01-66-730A	1		
	66 732D	COVER, FUSE BLOCK	FB01-66-731	1		
	66 733A	BREAKER	H001-66-733	2		
	66 740	HOLDER, FUSE	H001-66-739	1		
	67 010A	HARNESS, FRONT	FB02-67-010S	1	W/O P/S	-6601
			FBO2-67-010X	1	W/O P/S	6601-7101
			FB12-67-010A	1	W/O P/S A/T	7101-
			FB01-67-010T	1	FOR P/S	-6601
			FB01-67-010Y	1	W/ P/S	6601-7101
			FB08-67-010	1	W/ P/S A/T	7101-
			FB11-67-010A	1	W/ P/S M/T	7101-7301
			FB07-67-010A	1	M/T	7301-
			FB11-67-010B	1	W/ P/S M/T	7301-
			FB44-67-010C	1	TURBO	-6601
			FB44-67-010H	1	TURBO	6601-
	67 050	HARNESS, REAR	FB01-67-050P	1	GXL, TURBO FOR RR. WIPER	
			FB02-67-050M	1	STD., SPT., SE W/O RR. WIPER	
	67 050A	HARNESS NO. 1, REAR	FB02-67-060B	1		
	67 058A	PROTECTOR	FB02-67-058B	2		
	67 060	HARNESS NO. 2, REAR	FB01-67-060B	1		
	67 100	HARNESS, INTERIOR LAMP	FB01-67-100B	1	W/O SUNROOF	-7501
			FB01-67-100C	1	W/O SUNROOF	7501-
			FB03-67-100B	1	W/ SUNROOF	-7501
			FB03-67-100C	1	W/ SUNROOF	7501-
	67 240E	WIRING, STORAGE	FB01-67-240A	1		
	67 980B	BRACKET, MAIN FUSE CASE	FB01-67-980E	1		

6601	FC33*	-152302
6625	FC33*	-157816
7101	FC33*	-528625
7301	FC33*	-537230
7501	FC33*	-547831

6700A-1 WIRING HARNESSES (FRONT & REAR) (COUPE) (ANTI-LOCK BRAKE SYSTEM)

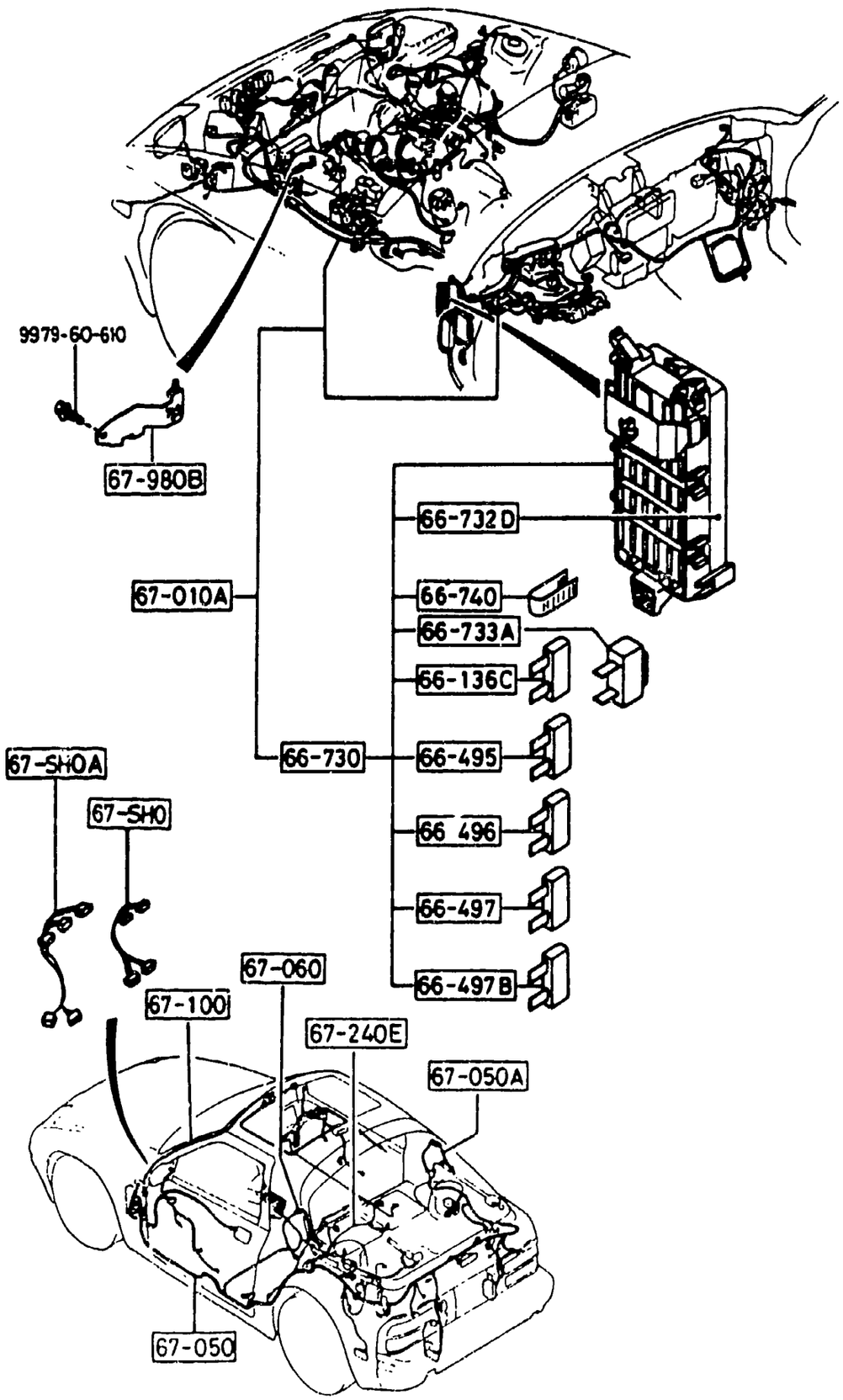

ITEM NO	D-CODE	DESCRIPTION	PART NO.	QTY	MODEL/DESCRIPTION	REMARKS
	66 136C	FUSE (7.5A)	9970-51-107	2		
	66 495	FUSE (10A)	9970-51-110	6		
	66 496	FUSE (15A)	9970-51-115	8		
	66 497	FUSE (20A)	9970-51-120	3		
	66 497B	FUSE (30A)	9970-51-130	1		
	66 730	BLOCK, FUSE	FB01-66-730A	1		
	66 732D	COVER, FUSE BLOCK	FB01-66-731	1		
	66 733A	BREAKER	H001-66-733	2		
	66 740	HOLDER, FUSE	H001-66-739	1		
	67 010A	HARNESS, FRONT	FB55-67-010H	1	W/O TURBO	
			FB60-67-010H	1	TURBO	
	67 050	HARNESS, REAR	FB55-67-050C	1		
	67 050A	HARNESS NO. 1, REAR	FB02-67-060B	1		
	67 060	HARNESS NO. 2, REAR	FB01-67-060B	1		
	67 100	HARNESS, INTERIOR LAMP	FB01-67-100B	1	W/O SUNROOF	-7501
			FB01-67-100C	1	W/O SUNROOF	7501-
			FB0: 67-100B	1	W/ SUNROOF	-7501
			FB03-67-100C	1	W/ SUNROOF	7501-
	67 240E	WIRING, STORAGE	FB01-67-240A	1		
	67 980B	BRACKET, MAIN FUSE CASE	FB01-67-980E	1		

7501 FC33* -547831

6700B-1 WIRING HARNESSES (FRONT & REAR) (CONVERTIBLE)

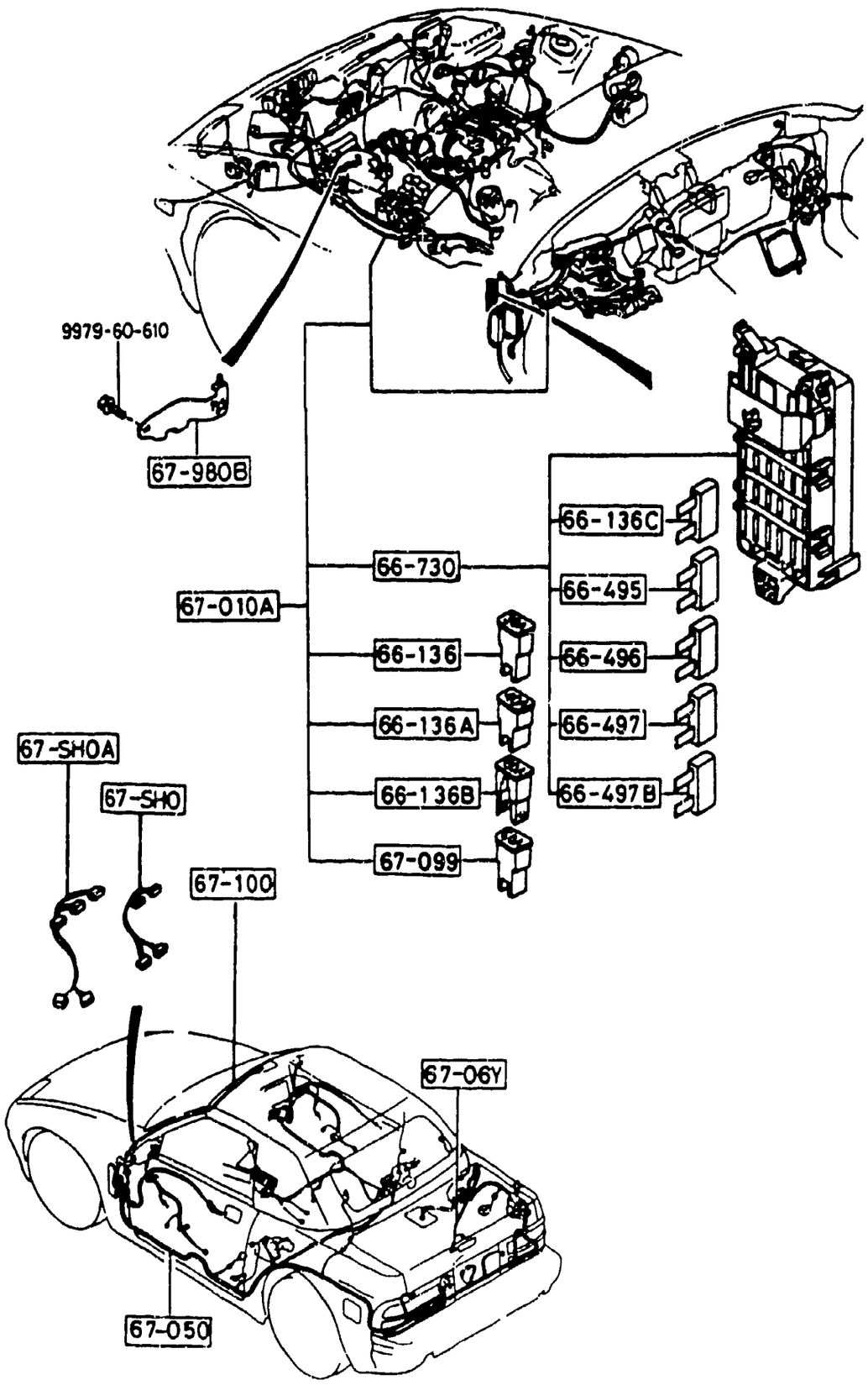

ITEM NO.	D-CODE	DESCRIPTION	PART NO.	QTY	MODEL/DESCRIPTION	REMARKS
	66 136	FUSE (30A)	H115-67-099	2		
	66 136A	FUSE (40A)	H116-67-099	2		
	66 136B	FUSE (80A)	H117-67-099			
	66 730	BLOCK, FUSE	FB67-66-730	1		
	67 010A	HARNESS, FRONT	FB67-67-010G	1		
	67 050	HARNESS, REAR	FB67-67-050M	1		
	67 06Y	HARNESS NO. 3, REAR	F055-67-06YB	1		
	67 099	LINK, FUSIBLE	FB01-67-099	1	60A	
	67 100	HARNESS, INTERIOR LAMP	FB67-67-100B	1		
	67 980B	BRACKET, MAIN FUSE CASE	FB01-67-980E	1		

6701-1 WIRING HARNESSES (ENGINE & T/MISSION) (COUPE) (W/O ANTI-LOCK BRAKE SYSTEM)

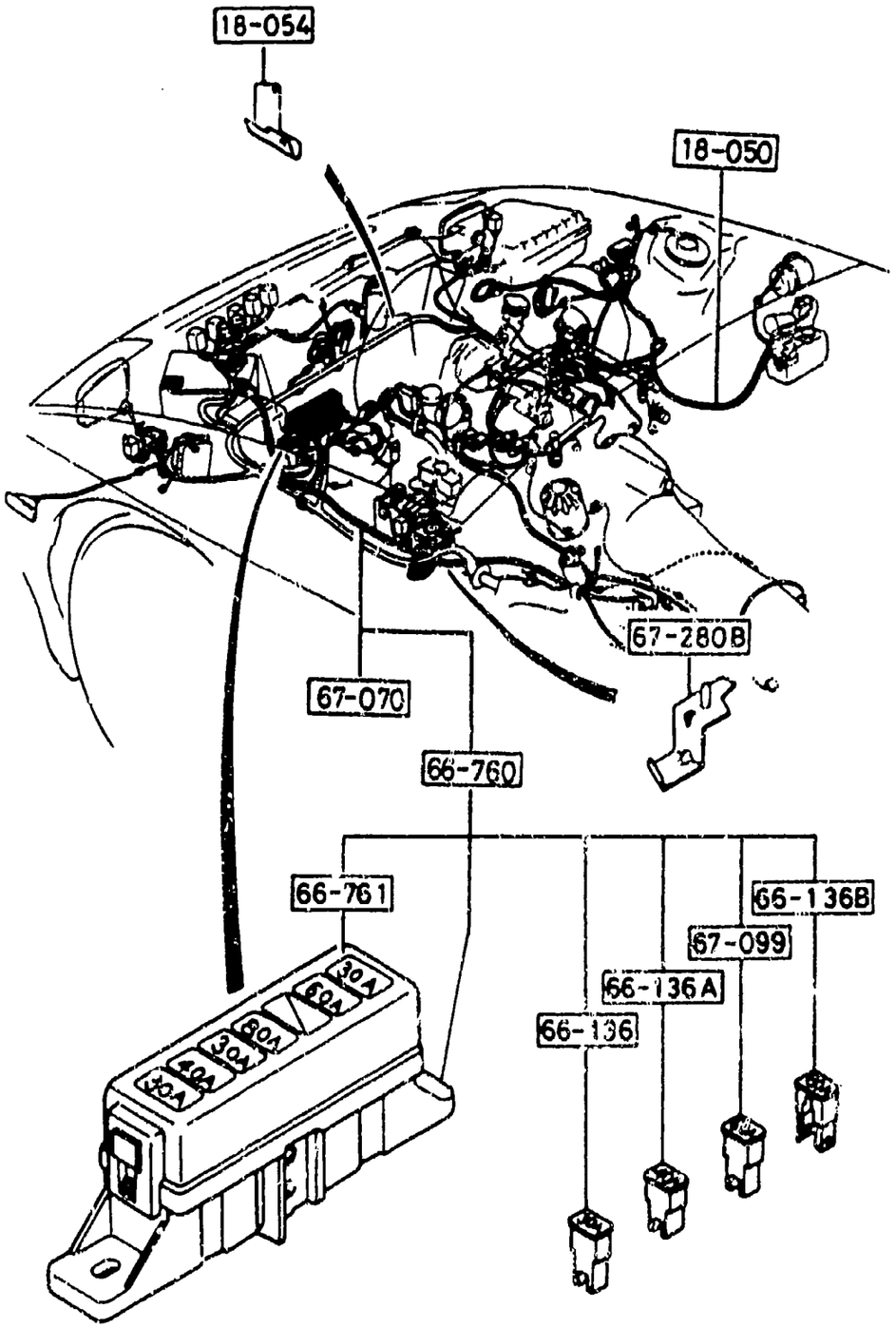

ITEM NO.	D-CODE	DESCRIPTION	PART NO.	QTY	MODEL/DESCRIPTION	REMARKS
	18 050	WIRING, ENGINE	N326-18-051L	1	W/O TURBO	-7601
			N326-18-051M	1	W/O TURBO	7601-
			N332-18-051K	1	TURBO	-7601
			N332-18-051L	1	TURBO	7601-
	18 054	BRACKET, HOLE-ENGINE WIRING	N318-18-054	1	TURBO	
			N326-18-054	1	W/O TURBO	
	66 136	FUSE (30A)	H115-67-099	3		
	66 136A	FUSE (40A)	H116-67-099	1		
	66 136B	FUSE (80A)	H117-67-099	1		
	66 760	BLOCK, MAIN FUSE	FB02-66-760	1		
	66 761	COVER, MAIN FUSE BLOCK	FB02-66-762	1		
	67 070	HARNESS, ENGINE	FB01-67-070F	1	W/O TURBO M/T	-7101
			FB01-67-070G	1	W/O TURBO M/T	7101-
			FB02-67-070F	1	W/O TURBO A/T	-7101
			FB02-67-070H	1	W/O TURBO A/T	7101-
			FB44-67-070E	1	TURBO	
	67 099	LINK, FUSIBLE	FB01-67-099	1	60A	6101-
	67 280B	BRACKET, BATTERY CABLE	FB01-67-280A	1		

6101 FC33* -124137
7101 FC33* -528625
7601 FC33* -550168

6701A-1 WIRING HARNESSES (ENGINE & T/MISSION) (COUPE) (ANTI-LOCK BRAKE SYSTEM)

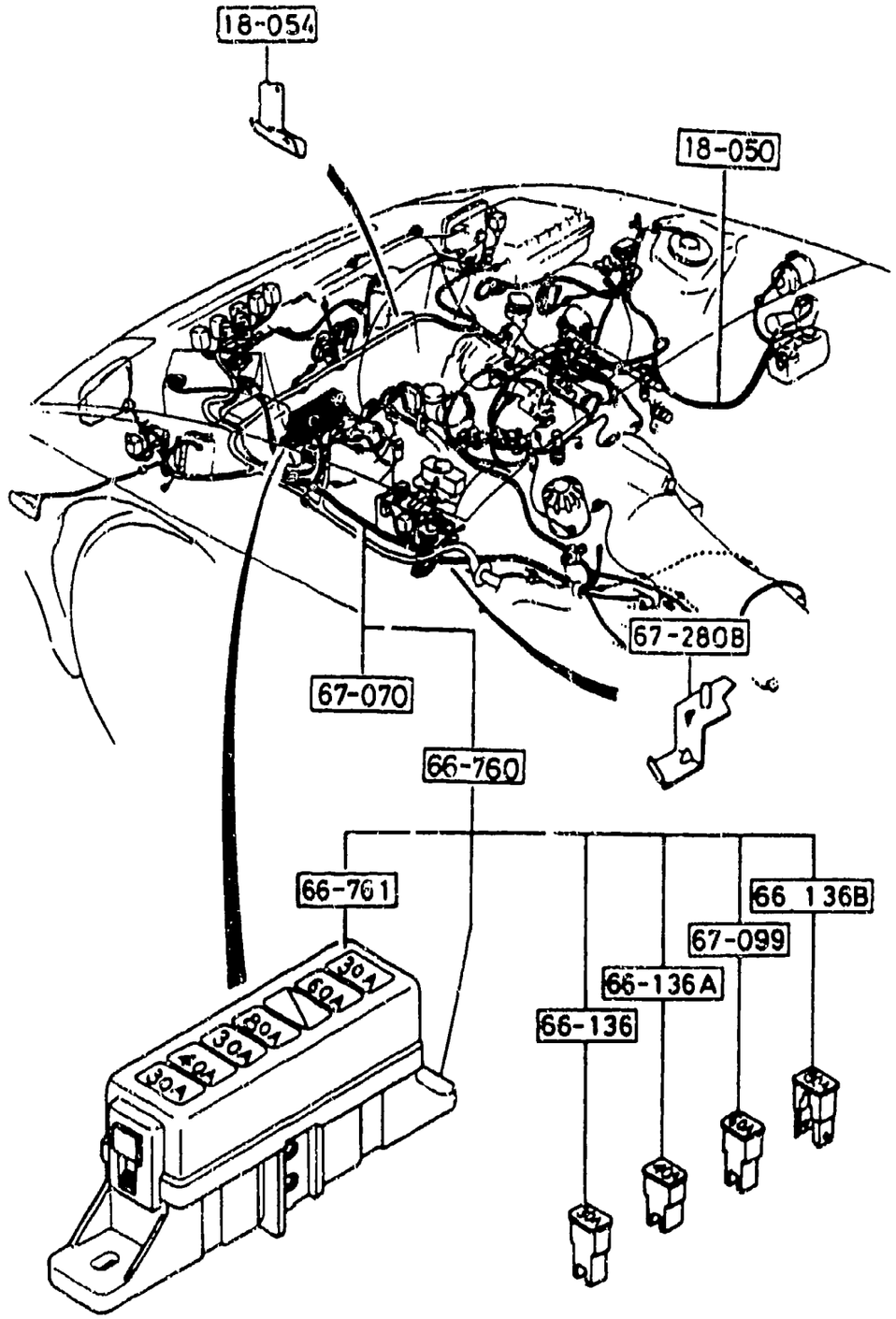

ITEM NO	D-CODE	DESCRIPTION	PART NO.	QTY	MODEL/DESCRIPTION	REMARKS
	18 050	WIRING, ENGINE	N326-18-051L	1	W/O TURBO	-7601
			N326-18-051M	1	W/O TURBO	7601-
			N332-18-051K	1	TURBO	-7601
			N332-18-051L	1	TURBO	7601-
	18 054	BRACKET, HOLE-ENGINE WIRING	N318-18-054	1	TURBO	
			N326 18-054	1	W/O TURBO	
	66 136	FUSE (30A)	H115-67-099	3		
	66 136A	FUSE (40A)	H116-67-099	1		
	66 136B	FUSE (80A)	H117-67-099	1		
	66 760	BLOCK, MAIN FUSE	F044-66-760	1		
	66 761	COVER, MAIN FUSE BLOCK	F044-66-762	1	W/O TURBO	6701-
					TURBO, W/O SUNROOF	
					TURBO, W/ SUNROOF	6708-
			FB02-66-762	1	TURBO, W/ SUNROOF	-6708
	67 070	HARNESS, ENGINE	FB60-67-070B	1	TURBO	
			FB44-67-070E	1	TURBO	
			FB55-67-070B	1	W/O TURBO, M/T	
			FB56-67-070B	1	W/O TURBO, A/T	
	67 099	LINK, FUSIBLE	FB01-67-099	2	60A W/O SUNROOF	6701-
					W/ SUNROOF, TURBO	6708-
				1	W/ SUNROOF, TURBO	-6708
	67 280B	BRACKET, BATTERY CABLE	FB01-67-280C	1		

6701 FC33* -500010
6708 FC33* -501682
7601 FC33* -550168

6701B-1 WIRING HARNESSES (ENGINE & T/MISSION) (CONVERTIBLE)

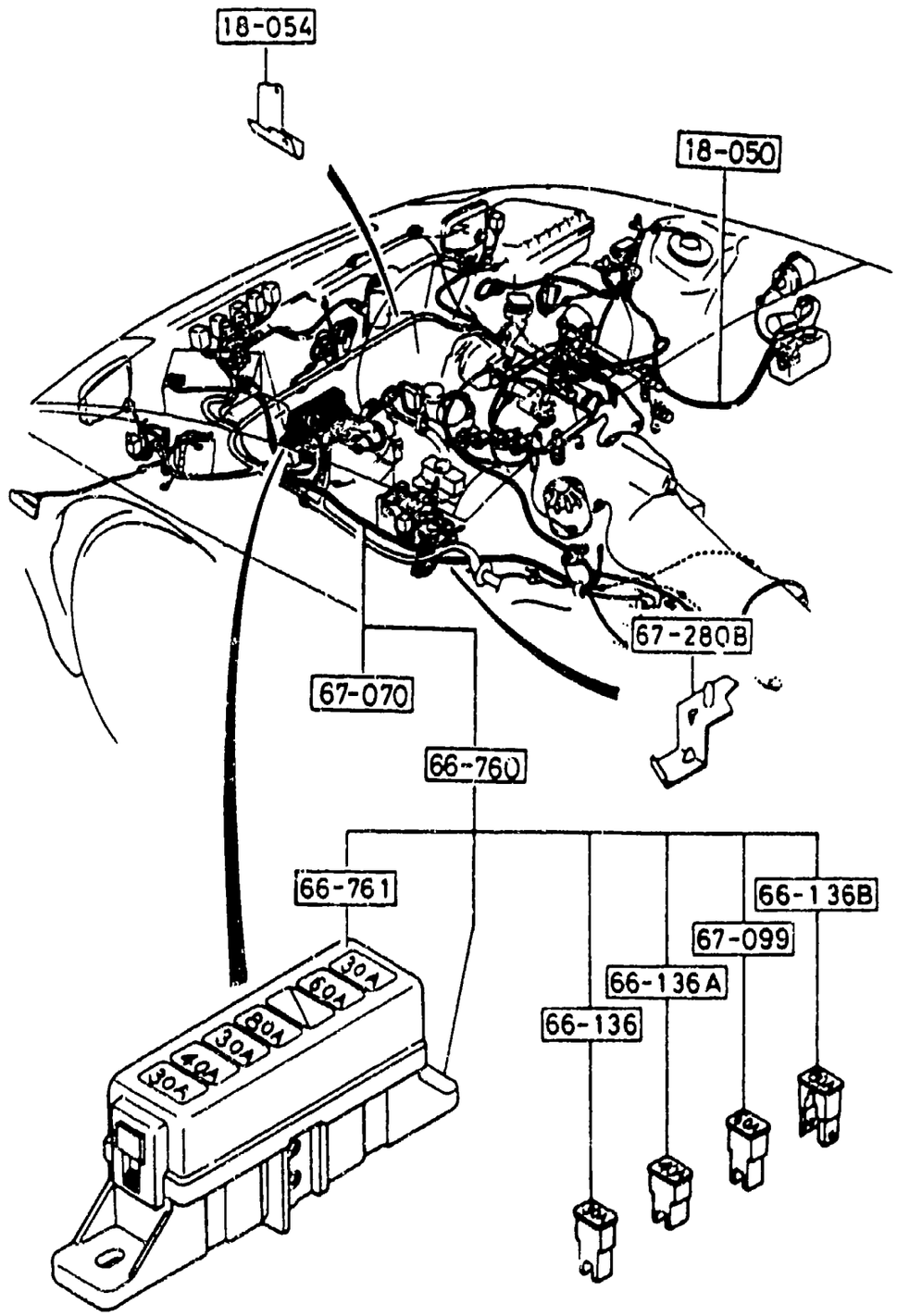

ITEM NO.	D-CODE	DESCRIPTION	PART NO.	QTY	MODEL/DESCRIPTION	REMARKS
	18 050	WIRING, ENGINE	N326-18-051M	1		
	18 054	BRACKET, HOLE-ENGINE WIRING	N326-18-054	1		
	66 136	FUSE (30A)	H115-67-099	3		
	66 136A	FUSE (40A)	H116-67-099	1		
	66 136B	FUSE (80A)	H117-67-099	1		
	66 760	BLOCK, MAIN FUSE	F044-66-760	1		
	66 761	COVER, MAIN FUSE BLOCK	FB02-66-762	1		
	67 070	HARNESS, ENGINE	FB01-67-070H	1		
	67 099	LINK, FUSIBLE	FB01-67-099	1	60A	
	67 280B	BRACKET, BATTERY CABLE	FB01-67-280A	1		

6702-1 WIRING HARNESSES (DASHBOARD) (COUPE) (W/O ANTI-LOCK BRAKE SYSTEM)

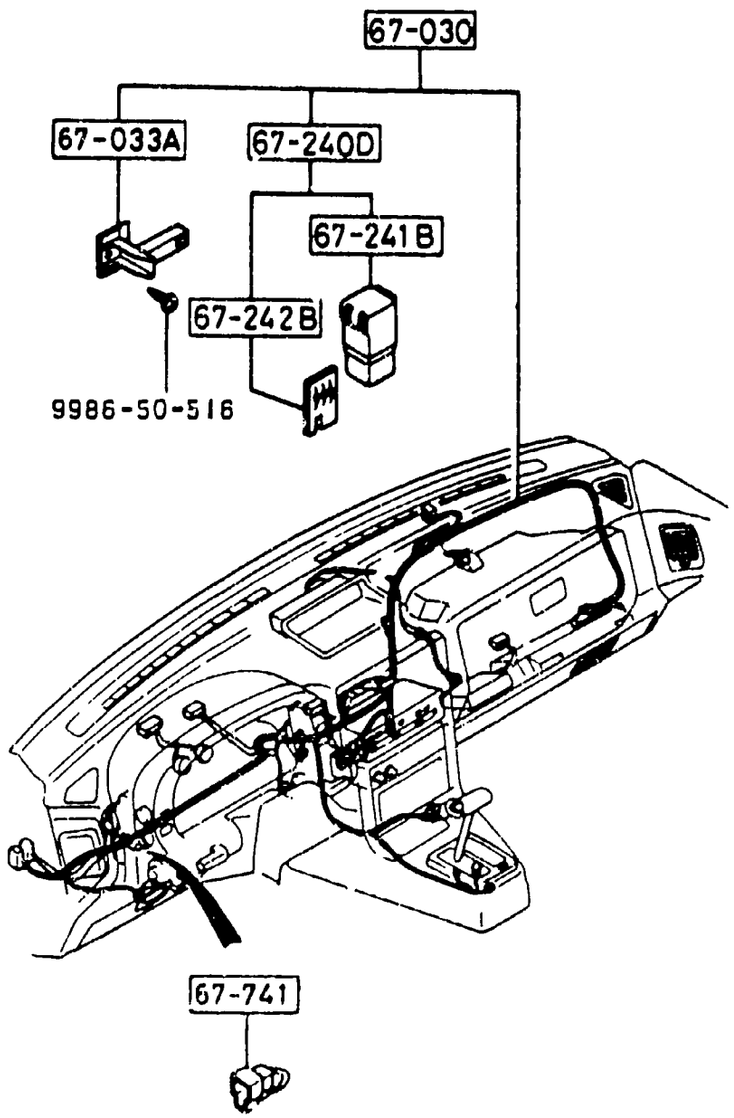

ITEM NO.	D-CODE	DESCRIPTION	PART NO.	QTY	MODEL/DESCRIPTION	REMARKS
	67 030	HARNESS, INSTRUMENT	FB01-67-030G	1	W/O C.D.	
			FB08-67-030E	1	W/ C.D.	
	67 033A	BRACKET, WIRING	FB01-67-037	1		
	67 240D	BOX, DIODE	F041-67-240	1		
	67 241B	COVER, DIODE	F041-67-241	1		
	67 242B	TERMINAL, DIODE	F041-67-242	1		
	67 741	CONNECTOR, SHORT	FB01-67-741	1	A/T	-7401

7401 FC33* -543109

6702A-1 WIRING HARNESSES (DASHBOARD) (COUPE) (ANTI-LOCK BRAKE SYSTEM)

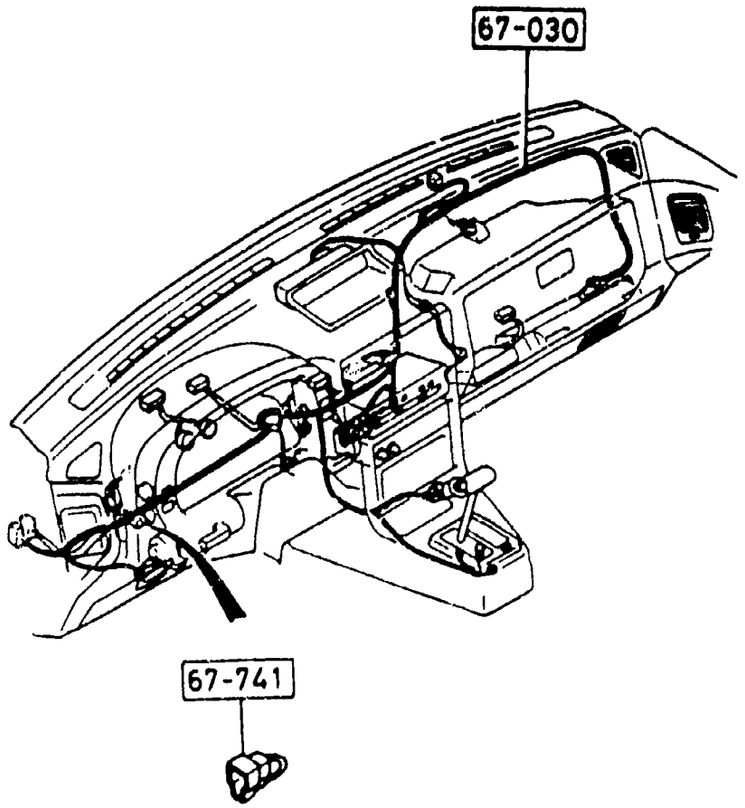

ITEM NO.	D-CODE	DESCRIPTION	PART NO	QTY	MODEL/DESCRIPTION	REMARKS
	67 030	HARNESS, INSTRUMENT	FB55-67-030B	1	W/O C.D.	
			FB60-67-030D	1	W/ C.D.	
	67 741	CONNECTOR, SHORT	FB01-67-741	1	A/T	

SECTION INDEX -- BODY

STARTING LOCATION	SECT NO	SECTION NAME
3 - C 3	6682	AUDIO SYSTEMS (ANTENNA & SPEAKER)
3 - F 3	6684	AUDIO SYSTEMS (NOISE SUPPRESSOR & GROUND CORD)
3 - G 3	6700	WIRING HARNESSES (FRONT & REAR) (COUPE) (W O ANTI-LOCK BRAKE SYSTEM)
3 - H 3	6700A	WIRING HARNESSES (FRONT & REAR) (COUPE) (ANTI-LOCK BRAKE SYSTEM)
3 - I 3	6700B	WIRING HARNESSES (FRONT & REAR) (CONVERTIBLE)
3 - J 3	6701	WIRING HARNESSES (ENGINE & T MISSION) (COUPE) (W O ANTI-LOCK BRAKE SYSTEM)
3 - K 3	6701A	WIRING HARNESSES (ENGINE & T MISSION) (COUPE) (ANTI-LOCK BRAKE SYSTEM)
3 - L 3	6701B	WIRING HARNESSES (ENGINE & T MISSION) (CONVERTIBLE)
3 - M 3	6702	WIRING HARNESSES (DASHBOARD) (COUPE) (W O ANTI-LOCK BRAKE SYSTEM)
3 - N 3	6702A	WIRING HARNESSES (DASHBOARD) (COUPE) (ANTI-LOCK BRAKE SYSTEM)
3 - C 4	6702B	WIRING HARNESSES (DASHBOARD) (CONVERTIBLE)
3 - D 4	6703	WIRING HARNESSES (DOOR, FLOOR CEILING)
3 - E 4	6704	WIRING HARNESS CLAMPS
3 - G 4	6720	WINDSHIELD WASHER
3 - I 4	6730	WINDSHIELD WIPERS
3 - J 4	6740	WIPER MOTOR COMPONENTS (FRONT)
3 - K 4	6750	WINDOW WIPER & WASHER (REAR) (COUPE)
3 - L 4	6760	WINDOW WIPER MOTOR COMPONENTS (REAR) (COUPE)
3 - M 4	6800A	CEILING TRIMS (COUPE)
3 - N 4	6800AB	CEILING TRIMS (CONVERTIBLE)
3 - C 5	6810	ROLLBAR (CONVERTIBLE)
3 - D 5	6820A	PILLAR TRIMS (COUPE)
3 - E 5	6820AA	PILLAR TRIMS (CONVERTIBLE)
3 - F 5	6840A	TRIMS & SCUFF PLATES (COUPE)
3 - J 5	6840AB	TRIMS & SCUFF PLATES (CONVERTIBLE)
3 - K 5	6845	STORAGE BOX (2-SEATER)
3 - L 5	6860A	FLOOR MATS & PADS (COUPE) (W O TURBO)
3 - C 6	6860AA	FLOOR MATS & PADS (COUPE) (TURBO)
3 - E 6	6860AB	FLOOR MATS & PADS (CONVERTIBLE)
3 - G 6	6865A	TRIM CLIPS & FASTENERS (COUPE)
3 - H 6	6865AA	TRIM CLIPS & FASTENERS (CONVERTIBLE)
3 - J 6	6870	SERVICE TOOLS
3 - C 7	6900A	VISORS, ASSIST HANDLES & MIRRORS
3 - H 7	6930	CAUTION PLATES & LABELS
3 - J 7	7250	QUARTER WINDOW & TRIMS
3 - K 7	7800	SPOILERS & RELATED PARTS
3 - L 7	7900	ACCESSORIES-CONSOLE LID

STARTING LOCATION	SECT NO	SECTION NAME

6702B-1 WIRING HARNESSES (DASHBOARD) (CONVERTIBLE)

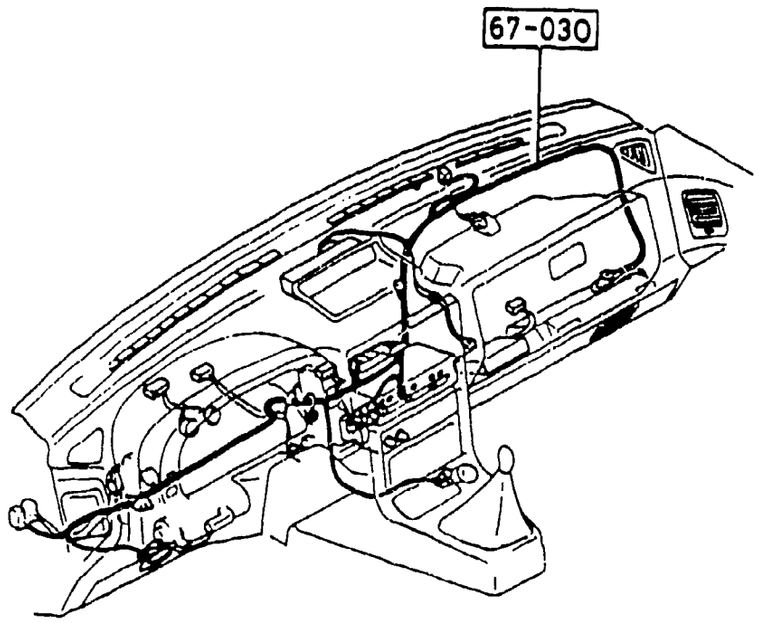

ITEM NO	D-CODE	DESCRIPTION	PART NO	QTY	MODEL/DESCRIPTION	REMARKS
	67 030	HARNESS, INSTRUMENT	FB67-67-030C	1		

6703-1 WIRING HARNESSES (DOOR, FLOOR/CEILING)

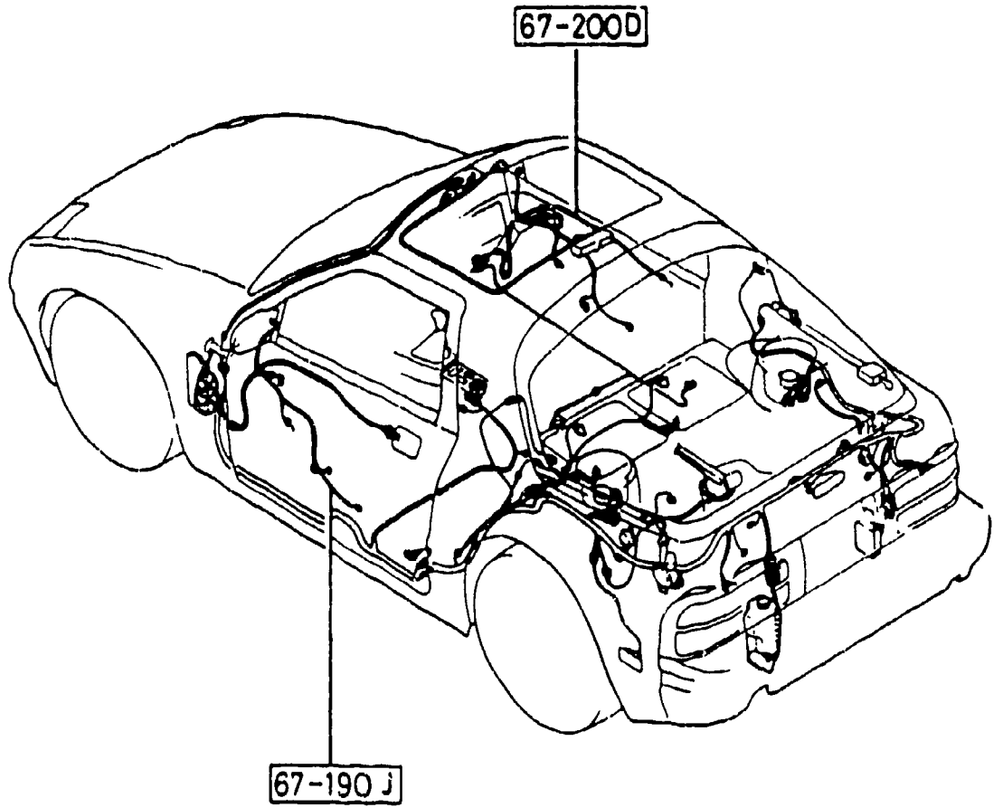

ITEM NO	D-CODE	DESCRIPTION	PART NO.	QTY	MODEL/DESCRIPTION	REMARKS
	67 190J	WIRING, HARNESS-DRIVER SIDE	FB02-67-190B	1	W/O KEY ILLUM. W/O P/S COUPE	
			FB03-67-190A	1	W/ P S W/O PWR. WIND. COUPE	
			FB01-67-190F	1	W/ P/S W/ PWR. WIND. COUPE	
			FB67-67-190D	1	CONV.	
	67 200D	WIRING, HARNESS-PASSENGER SIDE	FB02-67-200B	1	W/O KEY ILLUM. W/O P/S COUPE	
			FB03-67-200A	1	W P/S W/O PWR. WIND. COUPE	
			FB01-67-200F	1	W P S W PWR. WIND. COUPE	
			FB67-67-200D	1	CONV.	

6704-1 WIRING HARNESS CLAMPS

(THIS ILLUSTRATION CONSISTS OF 2 PAGES)

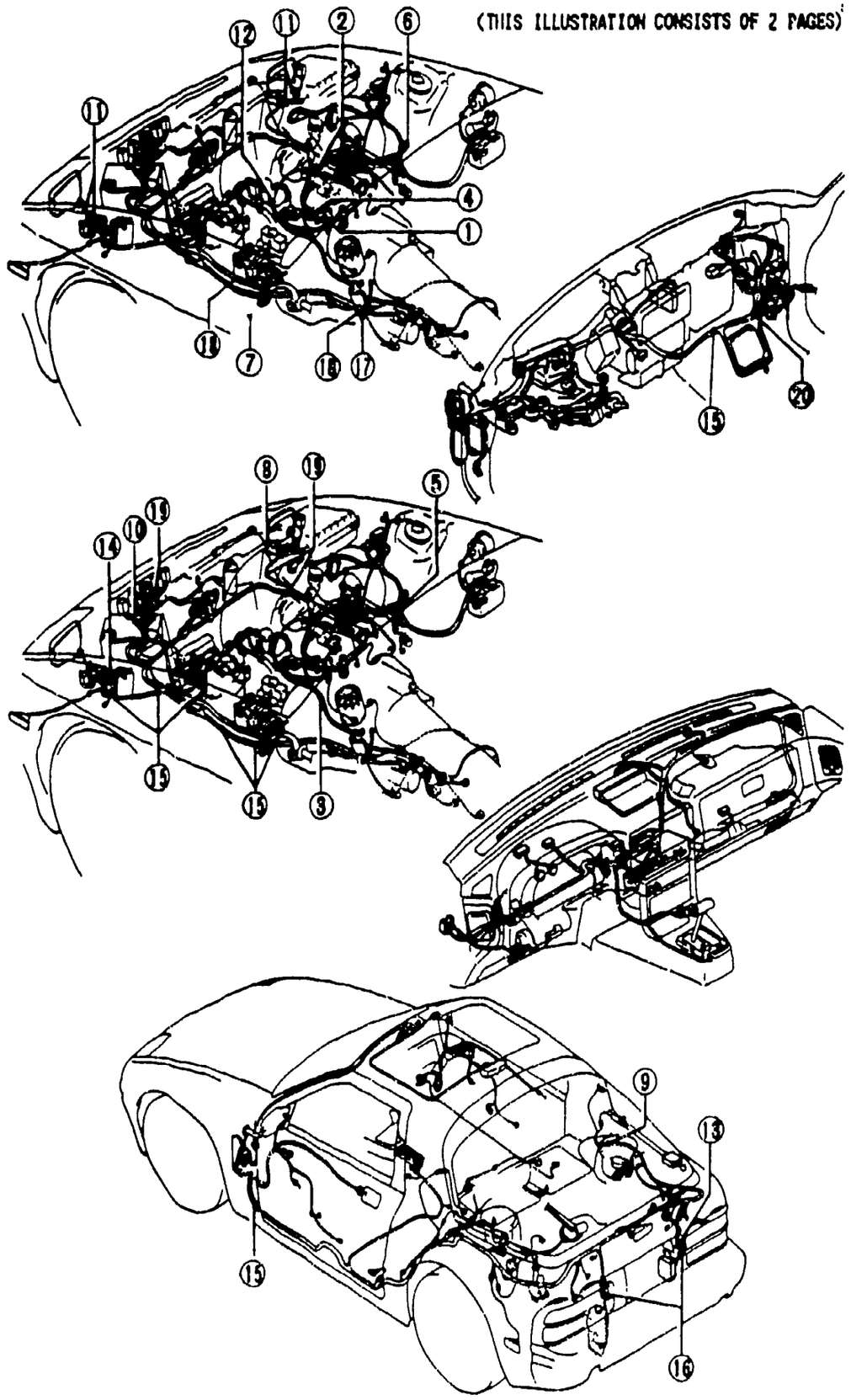

(THIS ILLUSTRATION CONSISTS OF 2 PAGES)

① 18-141E	② 18-226	③ 18-861	④ 18-994A	⑤ 18-995A (N327-18-057C)
⑥ 18-995A (N332-18-057A)	⑦ 45-961B	⑧ 66-941A	⑨ 66-941C	⑩ 67-012A
⑪ 67-014A	⑫ 67-019	⑬ 67-031B	⑭ 67-051E (UB42-67-051)	⑮ 67-051E (W029-67-051A)
⑯ 67-052J	⑰ 67-072A	⑱ 67-073	⑲ 67-254	⑳ 67-051G

WIRING HARNESS CLAMPS

SEE ILLUSTRATION/S AT FRAME 3 - E 4

ITEM NO	D-CODE	DESCRIPTION	PART NO	QTY	MODEL/DESCRIPTION	REMARKS
	18 141E	SUPPORTER, CORD	N319-18-14Y	1	TURBO	
	18 226	CLIP	N326-18-0F0	1		
	18 861	CLIP	8341-18-861C	1	W/O TURBO	
	18 994A	CLIP, ENGINE HARNESS	1820-18-994	1	W/O TURBO	
	18 995A	BRACKET, CLIP	N327-18-057D	1		
	45 961B	CAP	H002-45-961	1		
	66 941A	CLIP	GB08-66-941	1		
	66 941C	CLIP	UB42-66-971	1		
	67 012A	CLIP	FB01-67-012	1		
	67 014A	CLIP	FB01-67-014	4		
	67 019	CLIP	FB02-67-019A	1	W/O TURBO	
	67 031B	CLIP	UB42-67-031	1		
	67 051E	CLIP	UB42-67-051	1		
			WO29-67-051	7		-6601
			WO29-67-051A	7		6601-7701
				8		7701-
	67 052J	CLIP	B001-67-051	2		
	67 072A	CLIP	FB01-67-072	1		
	67 073	CLIP	FB01-67-073A	2		
	67 254	CLIP, CABLE	S113-67-254A	3		
	67 293	CLIP, CABLE	UB83-67-253	1		

6601 FC33* -152302
7701 FC33* -550169

(7C01-)

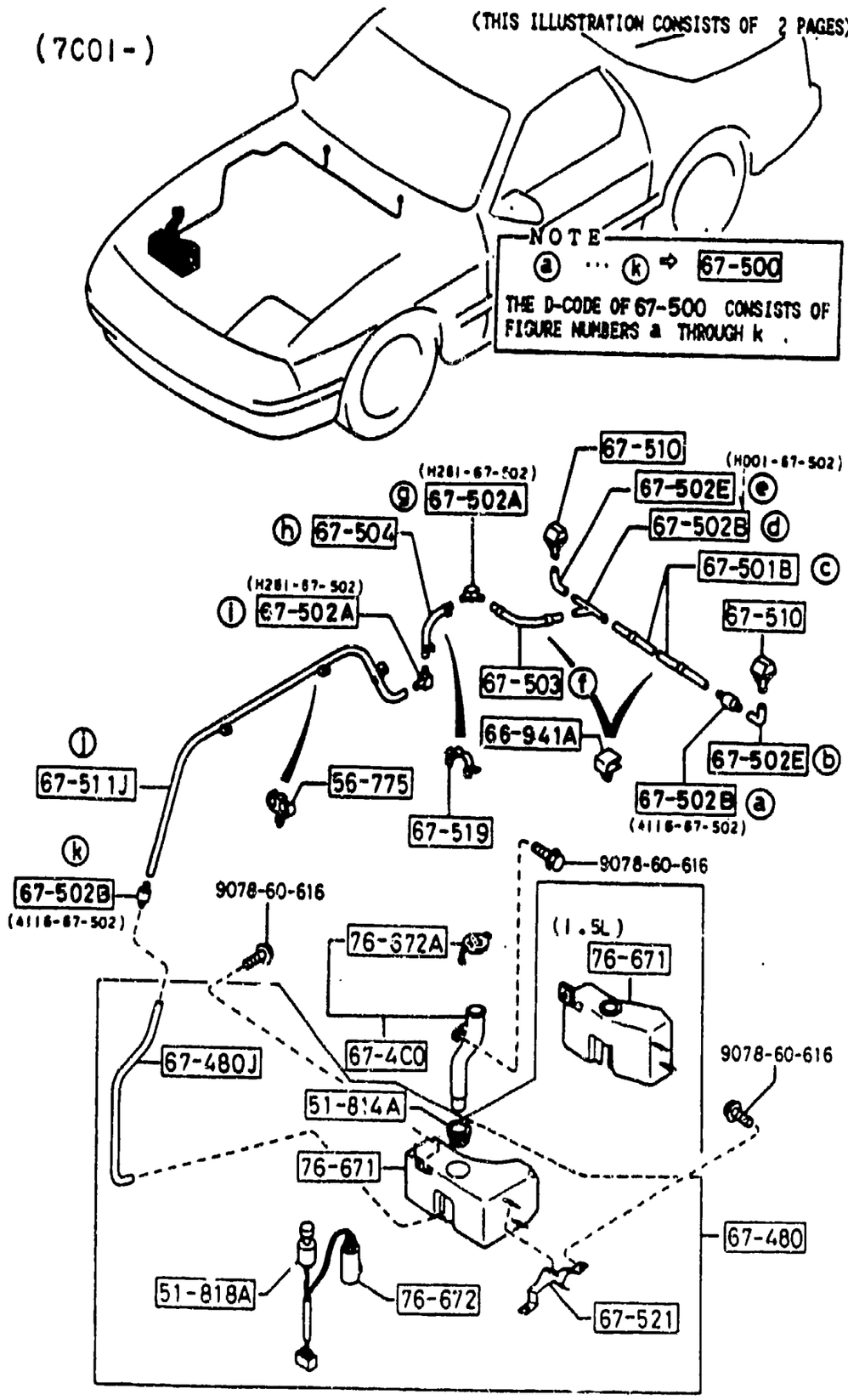
(THIS ILLUSTRATION CONSISTS OF 2 PAGES)
NOTE
ⓐ ··· ⓚ ⇨ 67-500
THE D-CODE OF 67-500 CONSISTS OF FIGURE NUMBERS a THROUGH k .
67-510
(H001-67-502)
67-502E ⓔ
67-502B ⓓ
(H281-67-502)
ⓖ 67-502A
ⓗ 67-504
67-501B ⓒ
67-510
(H281-67-502)
ⓘ 67-502A
67-503 ⓕ
66-941A
67-502E ⓑ
67-502B ⓐ
(4116-67-502)
ⓙ
67-511J
56-775
67-519
ⓚ
67-502B
(4116-67-502)
9078-60-616
9078-60-616
(1.5L)
76-372A
76-671
67-4C0
67-480J
9078-60-616
51-814A
76-671
67-480
51-818A
76-672
67-521

(-7C01)

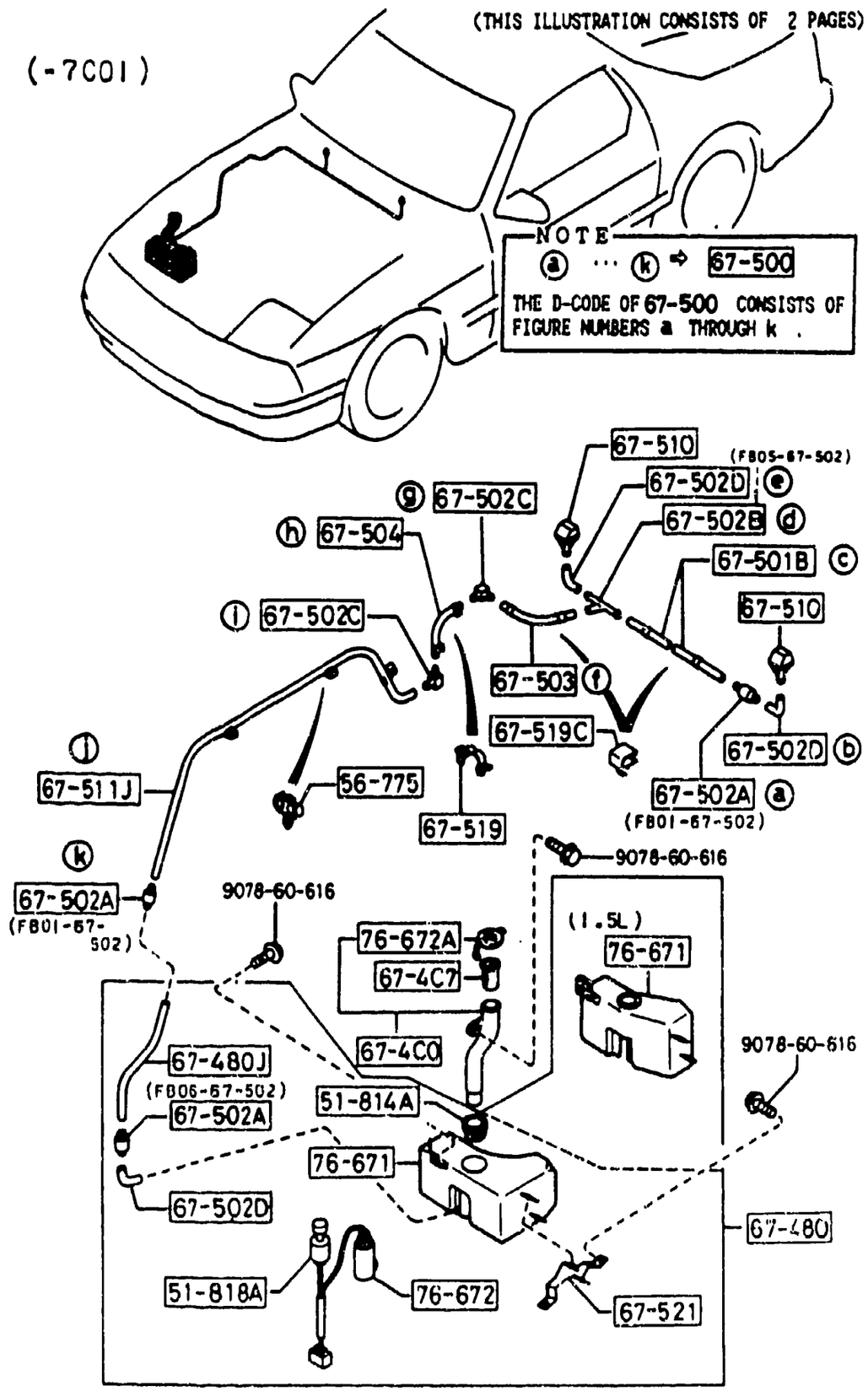
(THIS ILLUSTRATION CONSISTS OF 2 PAGES)
NOTE
ⓐ ··· ⓚ ⇨ 67-500
THE D-CODE OF 67-500 CONSISTS OF FIGURE NUMBERS a THROUGH k .
67-510
(FB05-67-502)
67-502D ⓔ
67-502B ⓓ
ⓖ 67-502C
ⓗ 67-504
67-501B ⓒ
67-510
ⓘ 67-502C
67-503 ⓕ
67-519C
67-502D ⓑ
67-502A ⓐ
(FB01-67-502)
ⓙ
67-511J
56-775
67-519
ⓚ
67-502A
(FB01-67-502)
9078-60-616
9078-60-616
(1.5L)
76-672A
67-4C7
76-671
67-4C0
67-480J
(FB06-67-502)
67-502A
9078-60-616
51-814A
76-671
67-502D
67-480
51-818A
76-672
67-521

6720-2 WINDSHIELD WASHER

SEE ILLUSTRATION/S AT FRAME 3 - G 4

ITEM NO.	D-CODE	DESCRIPTION	PART NO.	QTY	MODEL/DESCRIPTION	REMARKS
	51 814A	GROMMET, WASHER TANK	FB01-51-816	1		
	51 818A	SWITCH, LEVEL-WASHER TANK	FB01-67-488A	1		
	56 775	CLIP, WIRE-BONNET	FB01-56-775B	3		
	67 480	TANK, WASHER-FRONT	FB41-67-4T0	1		
	67 480J	PIPE, VINYL	FB04-67-503	1		
	67 4C0	PIPE, FILLER-WASHER TANK	FB01-67-4C0B	1		
	67 4C7	FILTER, WASHER TANK-FRONT	FB01-67-4C7	1		
	67 500	PIPE	FB01-67-500B	1		
	67 501B	HOSE 'A', WASHER	FB01-67-501B	1		
	67 502A	JOINT, HOSE	FB01-67-502	2		
			FB06-67-502	1		
	67 502B	JOINT, HOSE	FB05-67-502	1		
	67 502C	JOINT, ELBOW	FB03-67-502	2		
	67 502D	JOINT 'L'	FB04-67-502	3		
	67 503	HOSE 'B', WASHER	FB01-67-503A	1		
	67 504	HOSE 'C', WASHER	FB01-67-504A	1		
	67 510	NOZZLE, WASHER-WINDSHIELD	FB01-67-510	2		
	67 511J	PIPE, SCREEN WASHER	FB02-67-503	1		
	67 519	CLIP, PIPE	FB01-67-519A	3		
	67 519C	CLIP	FB02-67-519	6		
	67 521	BRACKET, WASHER TANK	FB04-67-485	1		
	76 671	TANK	FB01-67-481	1		
	76 672	PUMP, WASHER	FB01-67-482A	1		
	76 672A	CAP, TANK	FB01-67-483	1		

6730-1 WINDSHIELD WIPERS

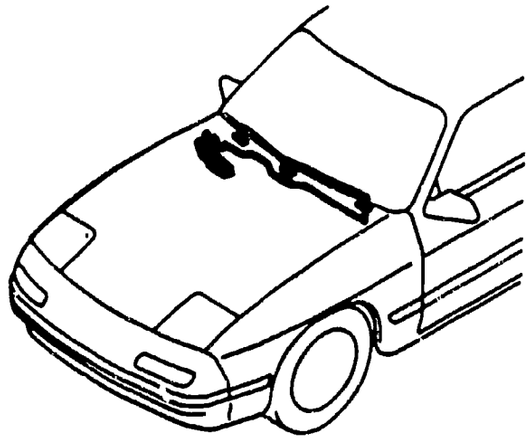

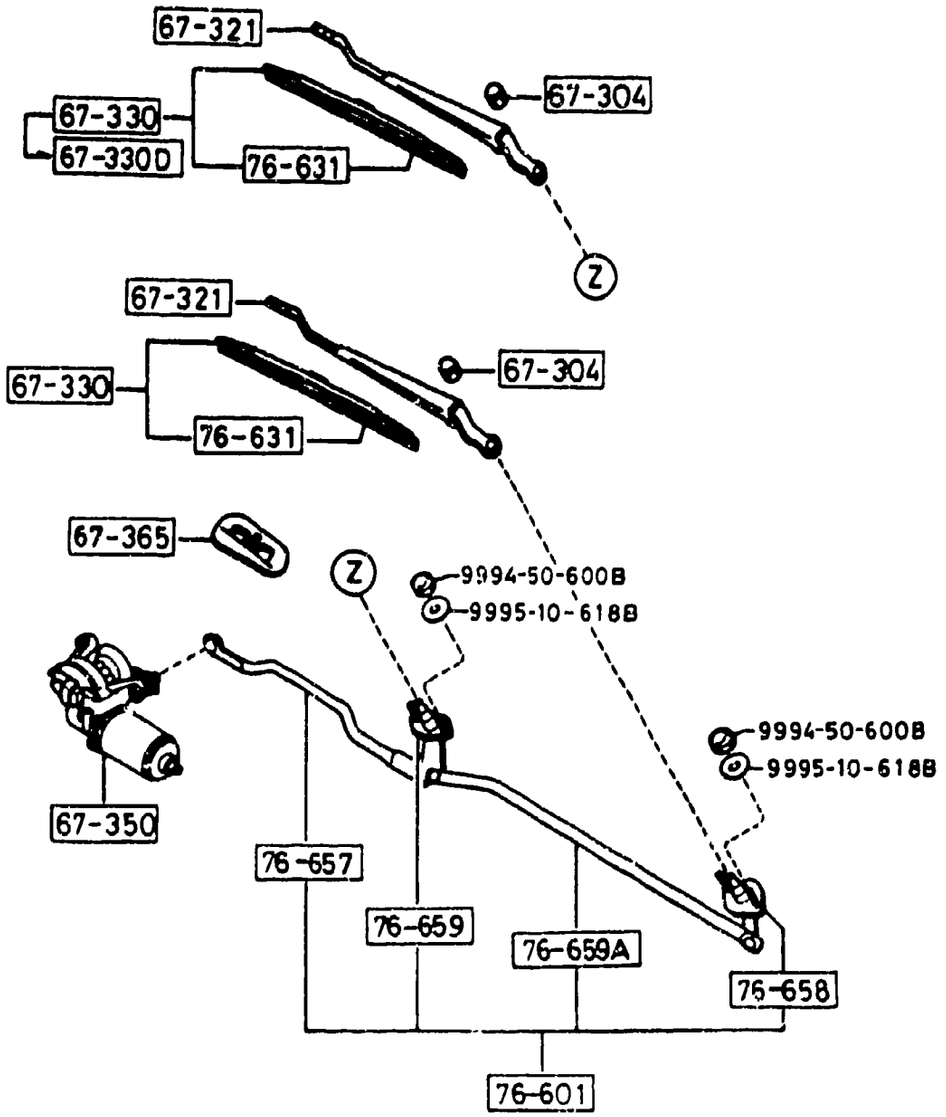

ITEM NO.	D-CODE	DESCRIPTION	PART NO.	QTY	MODEL/DESCRIPTION	REMARKS
	67 304	NUT, WIPER ARM-FRONT	FB01-67-304	2		-8401
	67 321	ARM, WIPER	FB01-67-321B	1	DRIVER SIDE	
			FB02-67-321A	1	PASSENGER SIDE	
	67 330	BLADE, WIPER-FRONT	HE76-67-330A	2		
	67 350	MOTOR, WIPER	FB01-67-350A	1		-7701
			FB06-67-350	1		7701-8401
			FB05-67-350A	1		8401-
	67 365	COVER, SEAL-COWL PANEL	FB01-67-365	1		-7801
	76 601	LINK, WIPER	FB01-67-360C	1		-8401
	76 631	RUBBER, BLADE-FRONT	H260-67-331	2		-8401
			HE76-67-331A	2		8401-
	76 657	ARM NO. 1, LINK	FB01-67-361	1		
	76 658	SHAFT, DRIVE NO. 2	FB01-67-364	1		
	76 659	SHAFT, DRIVE NO. 1	FB01-67-363	1		
	76 659A	ARM NO. 2, LINK	FB01-67-362	1		

7701	FC33*	-550169
7801	FC33*	-605316
	FC351	-100021
8401	FC33*	-624152
	FC351	-104470

6740-1 WIPER MOTOR COMPONENTS (FRONT)

COMPONENTS OF FB01-67-350A
FB06-67-350

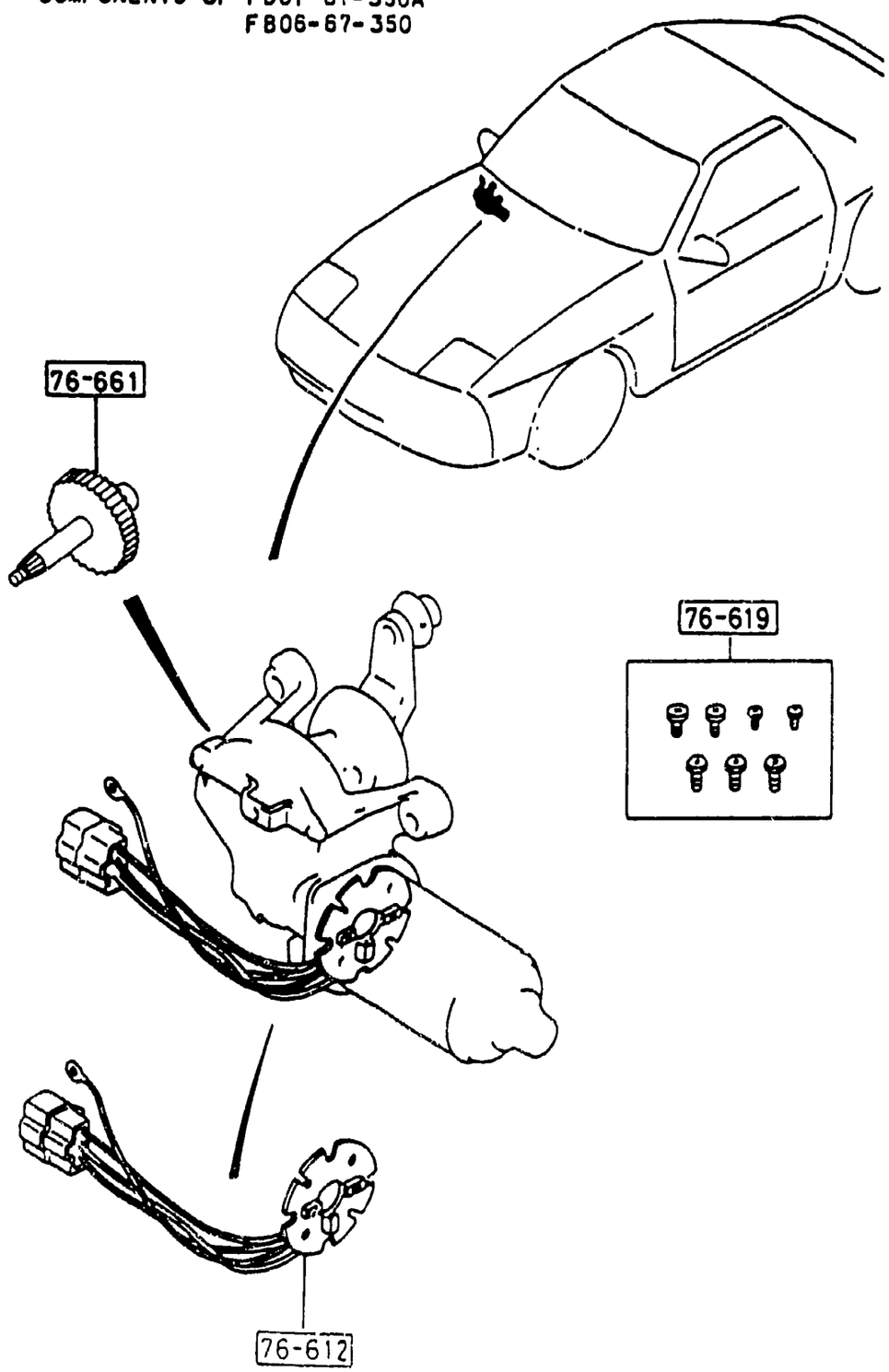

ITEM NO.	D-CODE	DESCRIPTION	PART NO	QTY	MODEL/DESCRIPTION	REMARKS
	76 612	PLATE, HOLDER-BRUSH	FB01-67 351	1		-7701
			FB05-67-351	1		7701-
	76 619	PARTS SET	H043-76-619A	1		
	76 661	GEAR, SHAFT	GJ83-67-354	1		7701-

7701 FC33* -550169

6750-1 WINDOW WIPER & WASHER (REAR) (COUPE)

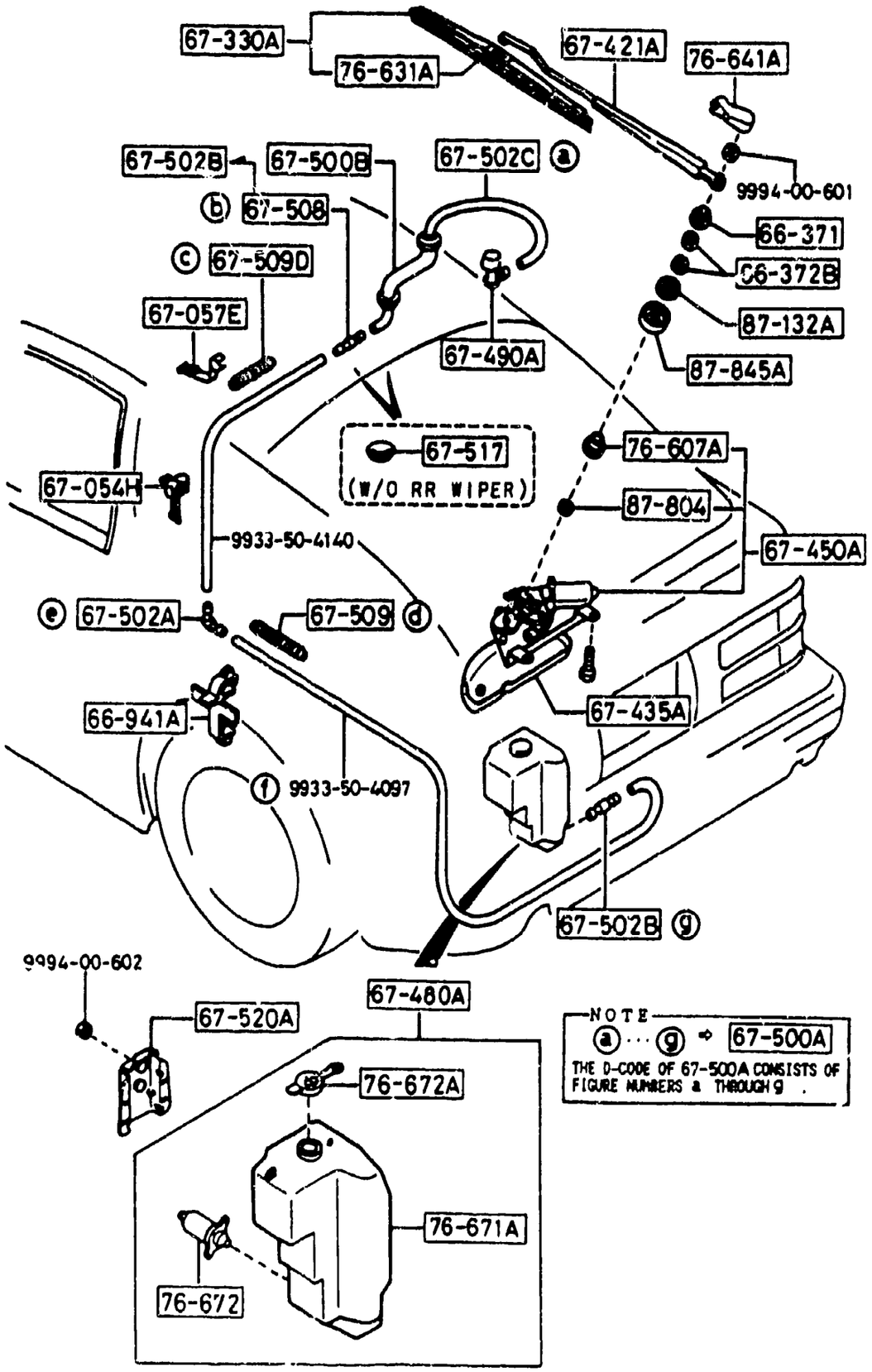

NOTE
ⓐ ··· ⓖ ⇨ 67-500A
THE D-CODE OF 67-500A CONSISTS OF FIGURE NUMBERS a THROUGH g .

ITEM NO	D-CODE	DESCRIPTION	PART NO	QTY	MODEL/DESCRIPTION	REMARKS
	66 371	CAP, SEAL	FB02-67-366	1		-7701
			FB02-67-366A	1		7701-
	66 372B	NUT	D001-76-605	2		
	66 941A	CLIP	GB08-66-941	1		
	67 054H	CLIP, OPENER CABLE	FB02-67-056	3		
	67 057E	CLIP 'B', PIPE-REAR WASHER	FB02-67-057	2		
	67 330A	BLADE, WIPER-REAR	FB02-67-330	1		
	67 421A	ARM, WIPER	FB02-67-421	1		
	67 435A	COVER, WIPER MOTOR	FB02-67-458B	1		
	67 450A	MOTOR	FB02-67-450A	1		
	67 480A	TANK, WASHER-REAR	FB02-67-480A	1		
	67 490A	NOZZLE, WASHER	FB02-67-510	1		
	67 500A	PIPE, REAR WASHER-LOWER	FB02-67-500	1		
	67 500B	PIPE, REAR WASHER-UPPER	FB04-67-500B	1		
	67 502A	JOINT, HOSE	S013-67-502	1		
	67 502B	JOINT, HOSE	4116-67-502	1		
	67 502C	JOINT, ELBOW	SA70-67-502	1		
	67 508	VALVE, CHECK	FA54-67-508	1		
	67 509	TUBE, CORRUGATE	G044-67-509	1		
	67 509D	TUBE, CORRUGATE	G033-67-509	1		
	67 517	COVER, HOLE	FB01-67-517	2		
	67 520A	BRACKET	FB02-67-520A	1		
	76 607A	BUSHING, INNER	FB02-67-402A	2		
	76 631A	RUBBER, BLADE-REAR	FB02-67-331	1		
	76 641A	COVER, WIPER ARM-REAR	B093-76-641	1		
	76 671A	TANK, WASHER-RR. WIPER	FB02-67-481	1		
	76 672	PUMP, WASHER	8532-76-672	1		
	76 672A	CAP, TANK	G030-76-673A	1		
	87 132A	WASHER	FB02-67-406	1		
	87 804	WASHER	FB03-67-406	1		
	87 845A	GASKET	FB02-67-408A	1		

7701 FC33* -550169

6760-1 WINDOW WIPER MOTOR COMPONENTS (REAR) (COUPE)

COMPONENTS OF FB02-67-450A

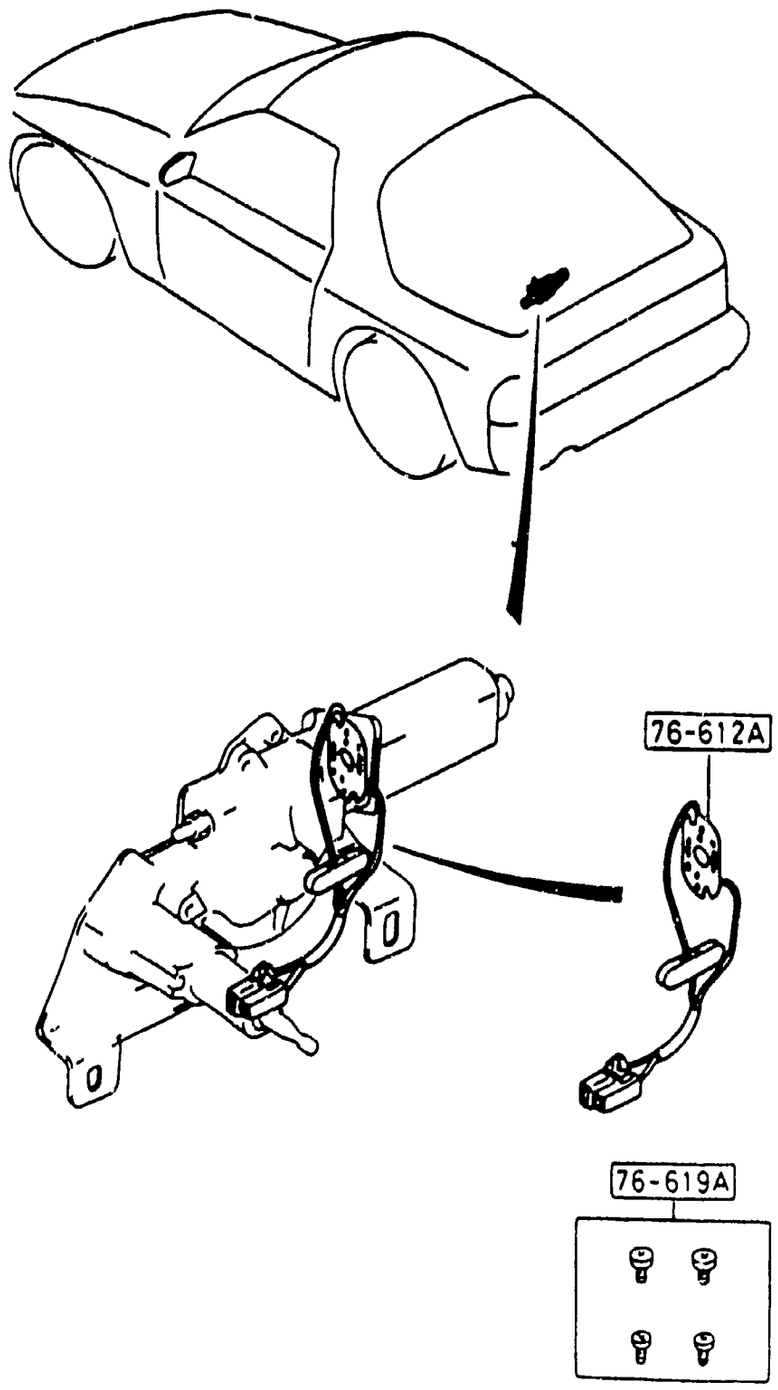

ITEM NO.	D-CODE	DESCRIPTION	PART NO	QTY	MODEL/DESCRIPTION	REMARKS
	76 612A	PLATE, HOLDER-BRUSH	FB02-67-451	1		
	76 619A	PARTS SET	B002-76-619A	1		

6800A-1 CEILING TRIMS (COUPE)

(W/SUNROOF)

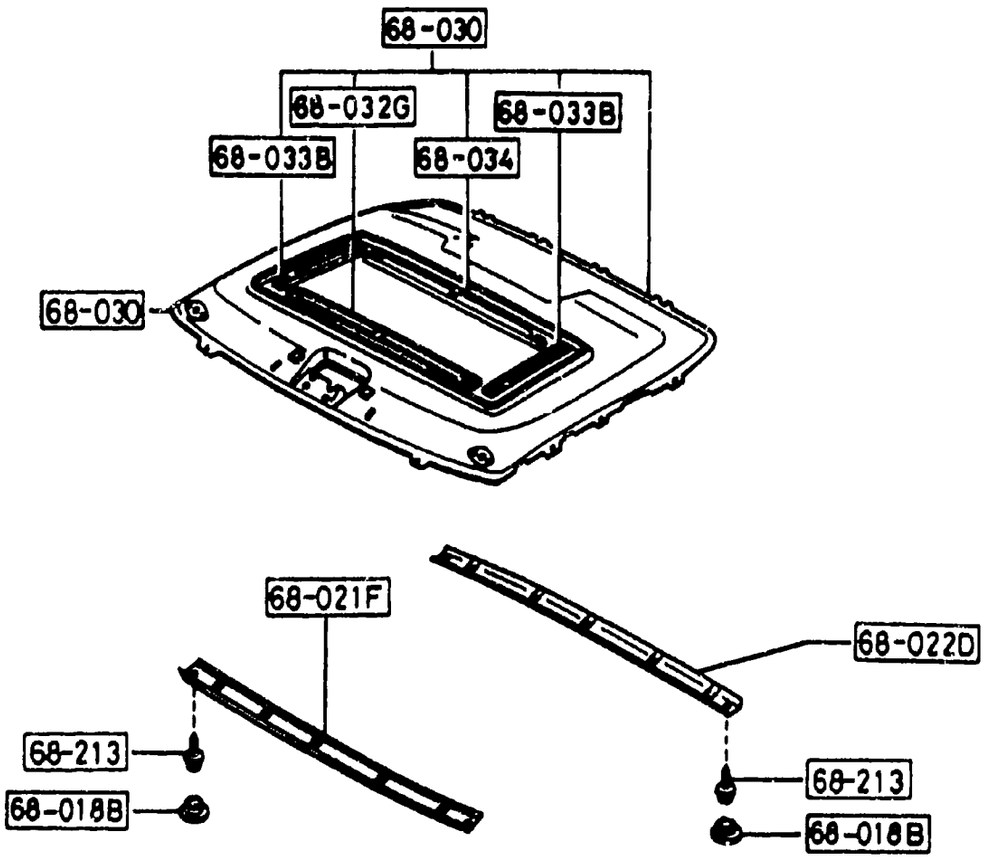

(W/O SUNROOF)

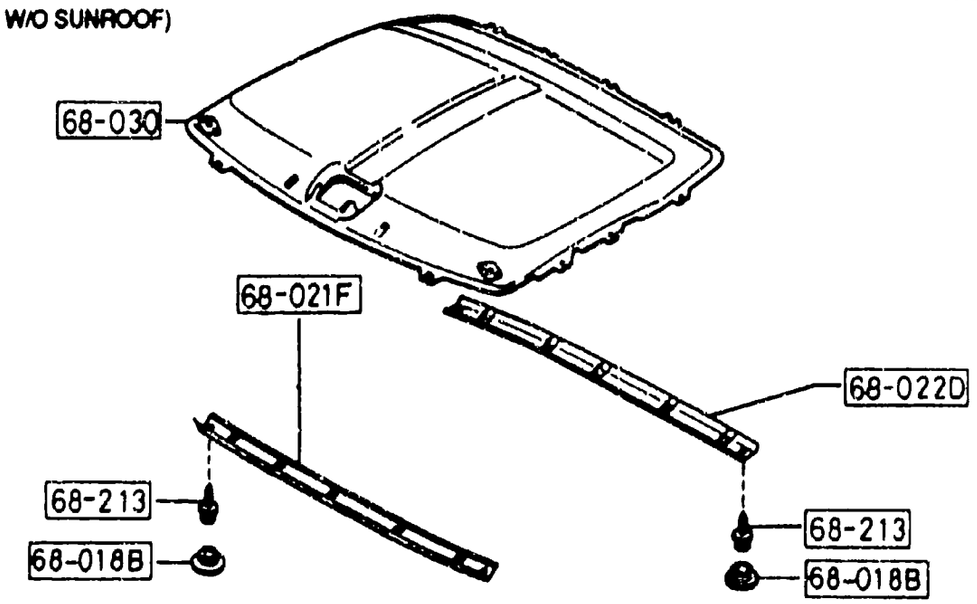

ITEM NO.	D-CODE	DESCRIPTION	PART NO.	QTY	MODEL/DESCRIPTION	REMARKS
	68 018B	CAP	FB01-68-151	4		
		BLACK	02			
		DARK GRAY	07			
		RED	10			
		BLUE	48			
	68 021F	GARNISH, TOP-FRONT	FB01-68-020	1		
		BLACK	02			
		DARK GRAY	07			
		RED	10			
		BLUE	48			
	68 022D	GARNISH, TOP-REAR	FB01-68-040	1		
		BLACK	02			
		DARK GRAY	07			
		RED	10			
		BLUE	48			
	68 030	CEILING, TOP	FB02-68-030	1	W/O SUNROOF	
		GRAY	07			
		RED	10			
		BLUE	48			
			FB03-68-030A	1	W/ SUNROOF	
		GRAY	07			
		RED	10			
		BLUE	48			
	68 032G	CHANNEL, T-CEILING-FRONT	FB03-68-032	1	FOR SUNROOF	
	68 033B	CHANNEL, T-CEILING-SIDE	FB03-68-033	2	FOR SUNROOF	
	68 034	CHANNEL T-CEILING-REAR	FB03-68-034	1	FOR SUNROOF	
	68 213	SCREW, TAPPING	G030-68-2138	4		

6800AB-1 CEILING TRIMS (CONVERTIBLE)

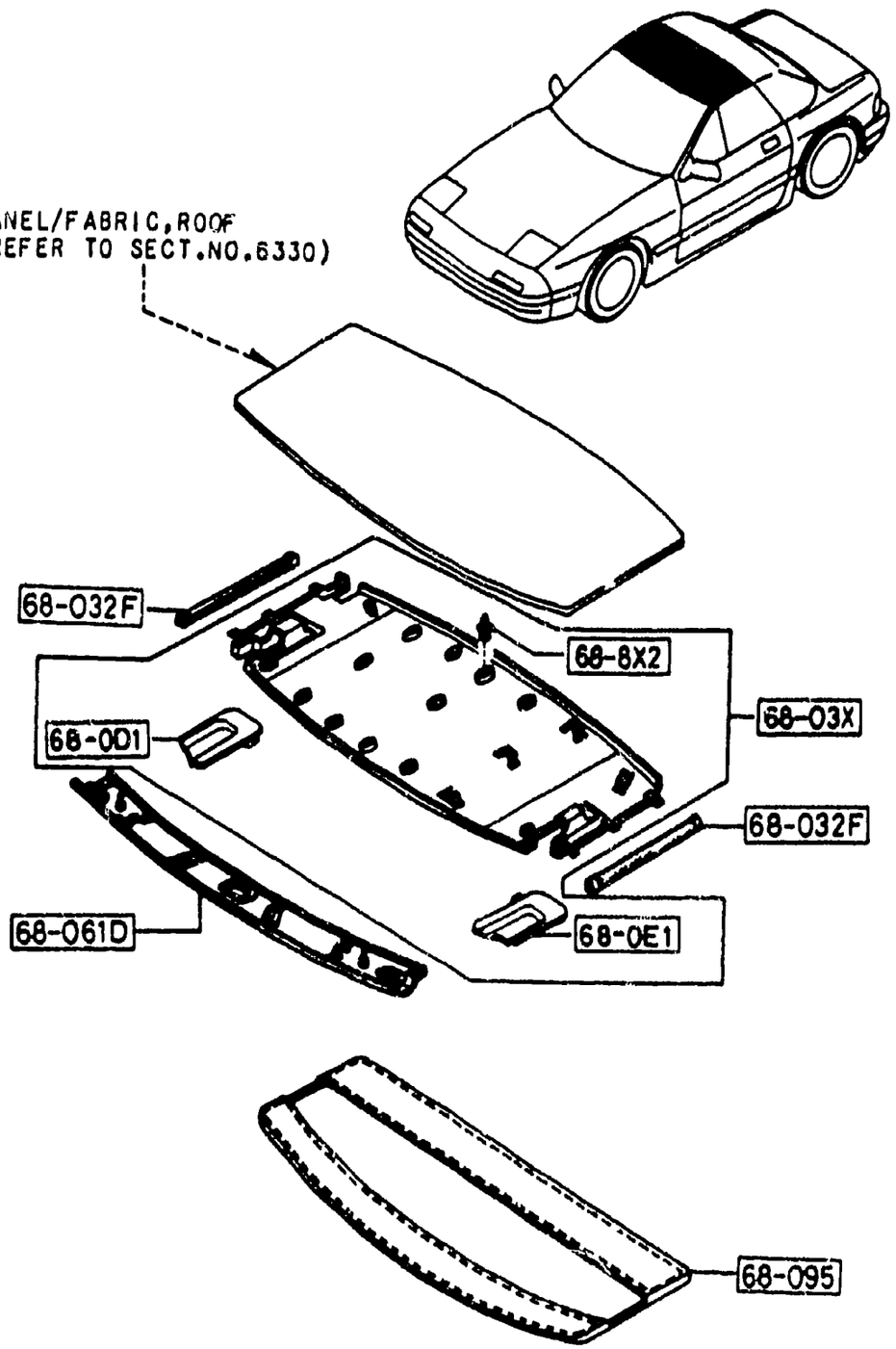

ITEM NO	D-CODE	DESCRIPTION	PART NO	QTY	MODEL/DESCRIPTION	REMARKS
	68 032F	WELT, SEAMING-ROOF	FB67-68-032	2		
		GRAY	07			
		BLUE	48			
	68 03X	TRIM, TOP	FB67-68-03XB	1		
		GRAY	07			
		BLUE	48			
	68 061D	TRIM, FRONT HEADER	FB67-68-020	1		
		GRAY	07			
		BLUE	48			
	68 095	BAG, ROOF PANEL	FB67-68-095A	1		

SECTION INDEX -- BODY

STARTING LOCATION	SECT NO	SECTION NAME
3 - C 3	6682	AUDIO SYSTEMS (ANTENNA & SPEAKER)
3 - F 3	6684	AUDIO SYSTEMS (NOISE SUPPRESSOR & GROUND CORD)
3 - G 3	6700	WIRING HARNESSES (FRONT & REAR) (COUPE) (W O ANTI-LOCK BRAKE SYSTEM)
3 - H 3	6700A	WIRING HARNESSES (FRONT & REAR) (COUPE) (ANTI-LOCK BRAKE SYSTEM)
3 - I 3	6700B	WIRING HARNESSES (FRONT & REAR) (CONVERTIBLE)
3 - J 3	6701	WIRING HARNESSES (ENGINE & T MISSION) (COUPE) (W O ANTI-LOCK BRAKE SYSTEM)
3 - K 3	6701A	WIRING HARNESSES (ENGINE & T MISSION) (COUPE) (ANTI-LOCK BRAKE SYSTEM)
3 - L 3	6701B	WIRING HARNESSES (ENGINE & T MISSION) (CONVERTIBLE)
3 - M 3	6702	WIRING HARNESSES (DASHBOARD) (COUPE) (W O ANTI-LOCK BRAKE SYSTEM)
3 - N 3	6702A	WIRING HARNESSES (DASHBOARD) (COUPE) (ANTI-LOCK BRAKE SYSTEM)
3 - C 4	6702B	WIRING HARNESSES (DASHBOARD) (CONVERTIBLE)
3 - D 4	6703	WIRING HARNESSES (DOOR, FLOOR CEILING)
3 - E 4	6704	WIRING HARNESS CLAMPS
3 - G 4	6720	WINDSHIELD WASHER
3 - I 4	6730	WINDSHIELD WIPERS
3 - J 4	6740	WIPER MOTOR COMPONENTS (FRONT)
3 - K 4	6750	WINDOW WIPER & WASHER (REAR) (COUPE)
3 - L 4	6760	WINDOW WIPER MOTOR COMPONENTS (REAR) (COUPE)
3 - M 4	6800A	CEILING TRIMS (COUPE)
3 - N 4	6800AB	CEILING TRIMS (CONVERTIBLE)
3 - C 5	6810	ROLLBAR (CONVERTIBLE)
3 - D 5	6820A	PILLAR TRIMS (COUPE)
3 - E 5	6820AA	PILLAR TRIMS (CONVERTIBLE)
3 - F 5	6840A	TRIMS & SCUFF PLATES (COUPE)
3 - J 5	6840AB	TRIMS & SCUFF PLATES (CONVERTIBLE)
3 - K 5	6845	STORAGE BOX (2 SEATER)
3 - L 5	6860A	FLOOR MATS & PADS (COUPE) (W O TURBO)
3 - C 6	6860AA	FLOOR MATS & PADS (COUPE) (TURBO)
3 - E 6	6860AB	FLOOR MATS & PADS (CONVERTIBLE)
3 - G 6	6865A	TRIM CLIPS & FASTENERS (COUPE)
3 - H 6	6865AA	TRIM CLIPS & FASTENERS (CONVERTIBLE)
3 - J 6	6870	SERVICE TOOLS
3 - C 7	6900A	VISORS, ASSIST HANDLES & MIRRORS
3 - H 7	6930	CAUTION PLATES & LABELS
3 - J 7	7250	QUARTER WINDOW & TRIMS
3 - K 7	7800	SPOILERS & RELATED PARTS
3 - L 7	7900	ACCESSORIES-CONSOLE LID

6810-1 ROLLBAR (CONVERTIBLE)

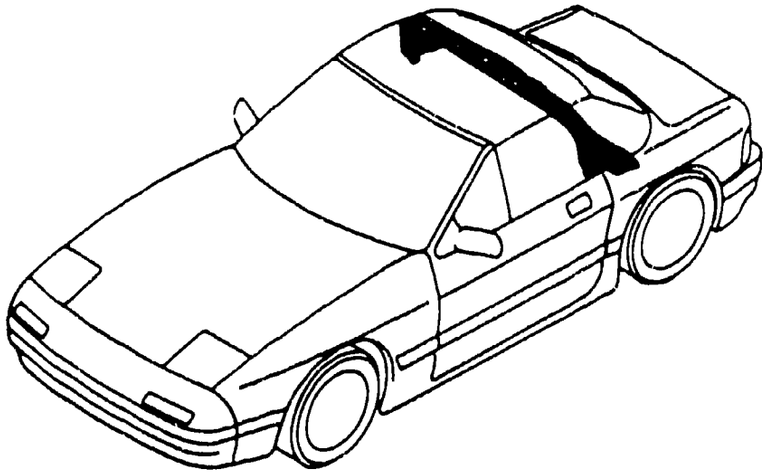

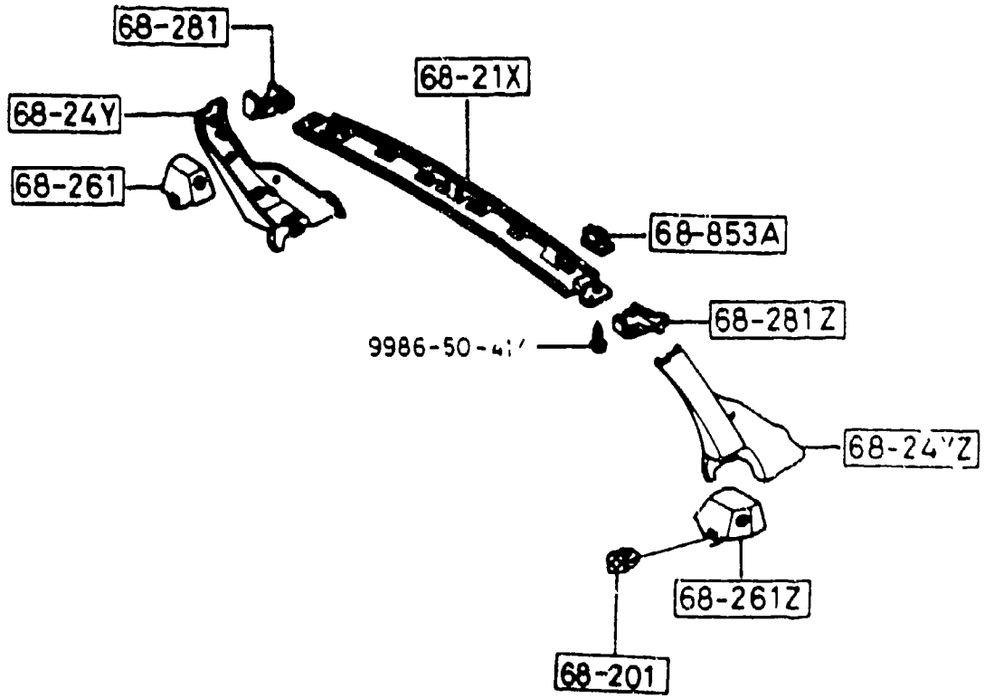

ITEM NO	D-CODE	DESCRIPTION	PART NO	QTY	MODEL/DESCRIPTION	REMARKS
	68 201	GROMMET, SCREW-QTR. TRIM	FB67-68-201	2		
	68 21X	TRIM, FORMING BAR	FB67-68-21XB	1		
		GRAY	07			
		BLUE	48			
	68 24Y	COVER (R), LINK	FB67-68-24YA	1		
		GRAY	07			
		BLUE	48			
	68 24YZ	COVER (L), LINK	FB67-68-25YA	1		
		GRAY	07			
		BLUE	48			
	68 261	COVER (R), BELT	FB67-68-261B	1		
		GRAY	07			
		BLUE	48			
	68 261Z	COVER (L), BELT	FB67-68-271B	1		
		GRAY	07			
		BLUE	48			
	68 281	COVER (R), HINGE	FB67-68-28XA	1		
		GRAY	07			
		BLUE	48			
	68 281Z	COVER (L), HINGE	FB67-68-29XA	1		
		GRAY	07			
		BLUE	48			
	68 853A	GROMMET, SCREW-T SIDE TRIM	FB02-68-853	2		

6820A-1 PILLAR TRIMS (COUPE)

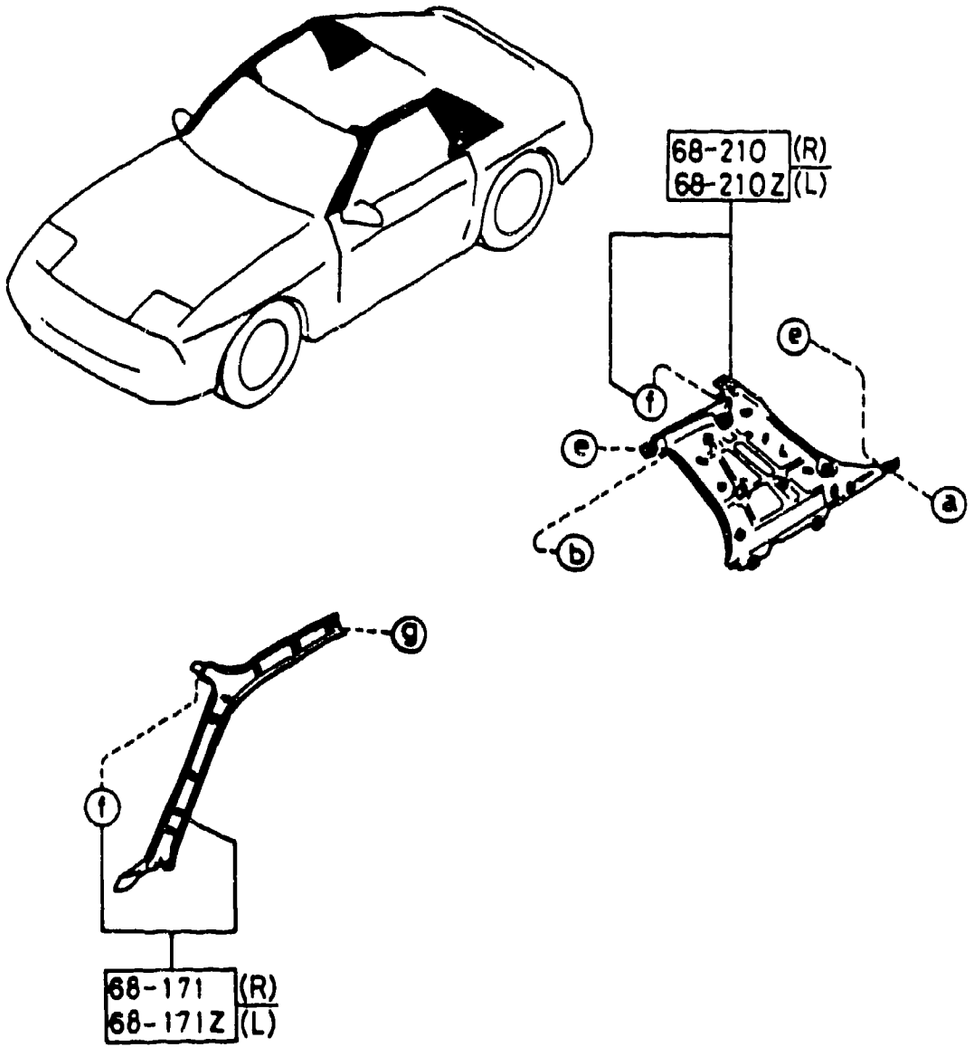

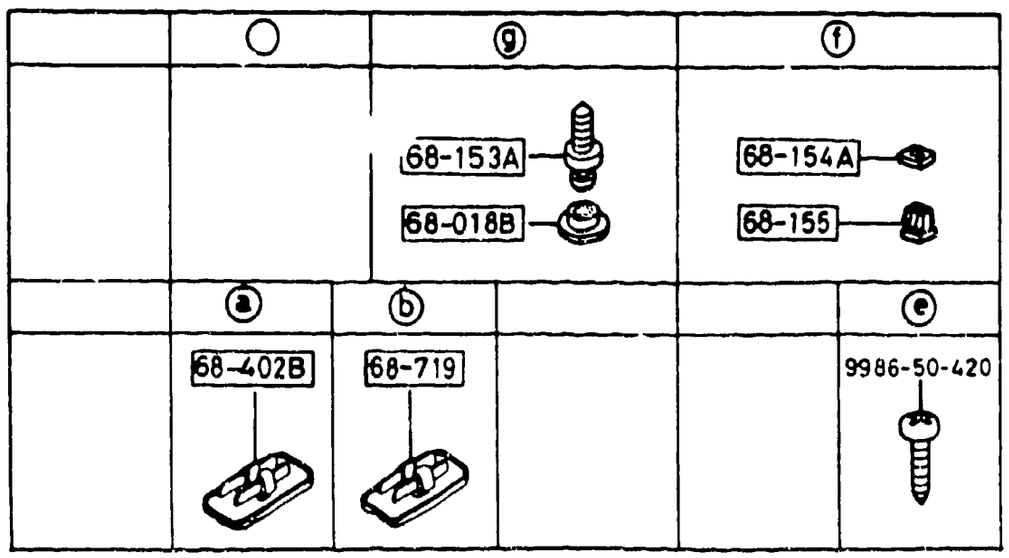

ITEM NO	D-CODE	DESCRIPTION	PART NO.	QTY	MODEL/DESCRIPTION	REMARKS
	68 018B	CAP	FB01-68-151	2		
		DARK GRAY	07			
		RED	10			
		BLUE	48			
	68 153A	SCREW, TAPPING	UB39-68-153	2		
	68 154A	ADJUSTER	FB02-68-154	4		-7401
	68 155	GROMMET, SCREW	FB01-68-155	4		
	68 171	TRIM (R), FRONT PILLAR	FB01-68-170A	1		
		DARK GRAY	07			
		RED	10			
		BLUE	48			
	68 171Z	TRIM (L), FRONT PILLAR	FB01-68-190A	1		
		DARK GRAY	07			
		RED	10			
		BLUE	48			
	68 210	TRIM (R), 'B' PILLAR	FB01-68-110A	1		
		DARK GRAY	07			
		RED	10			
		BLUE	48			
	68 210Z	TRIM (L), 'B' PILLAR	FB01-68-120A	1		
		DARK GRAY	07			
		RED	10			
		BLUE	48			
	68 402B	GROMMET, SCREW	FA54-68-719B	2		
	68 719	GROMMET, SCREW	H001-68-719A	2		

7401 FC33* -543109

6820AA-1 PILLAR TRIMS (CONVERTIBLE)

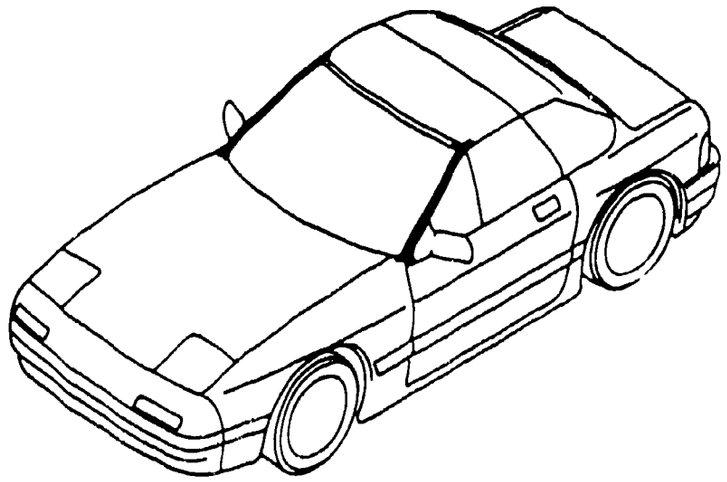

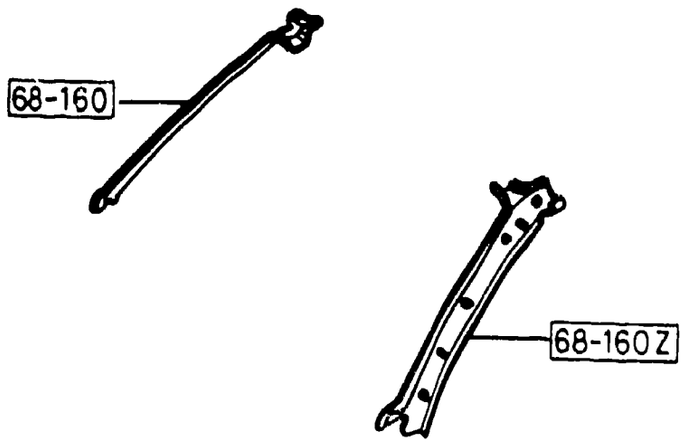

ITEM NO	D-CODE	DESCRIPTION	PART NO.	QTY	MODEL/DESCRIPTION	REMARKS
	68 160	TRIM (R), 'A' PILLAR	FB67-68-160	1		
		DARK GRAY	07			
		BLUE	48			
	68 160Z	TRIM (L), 'A' PILLAR	FB67-68-170	1		
		DARK GRAY	07			
		BLUE	48			

6840A-1 TRIMS & SCUFF PLATES (COUPE)

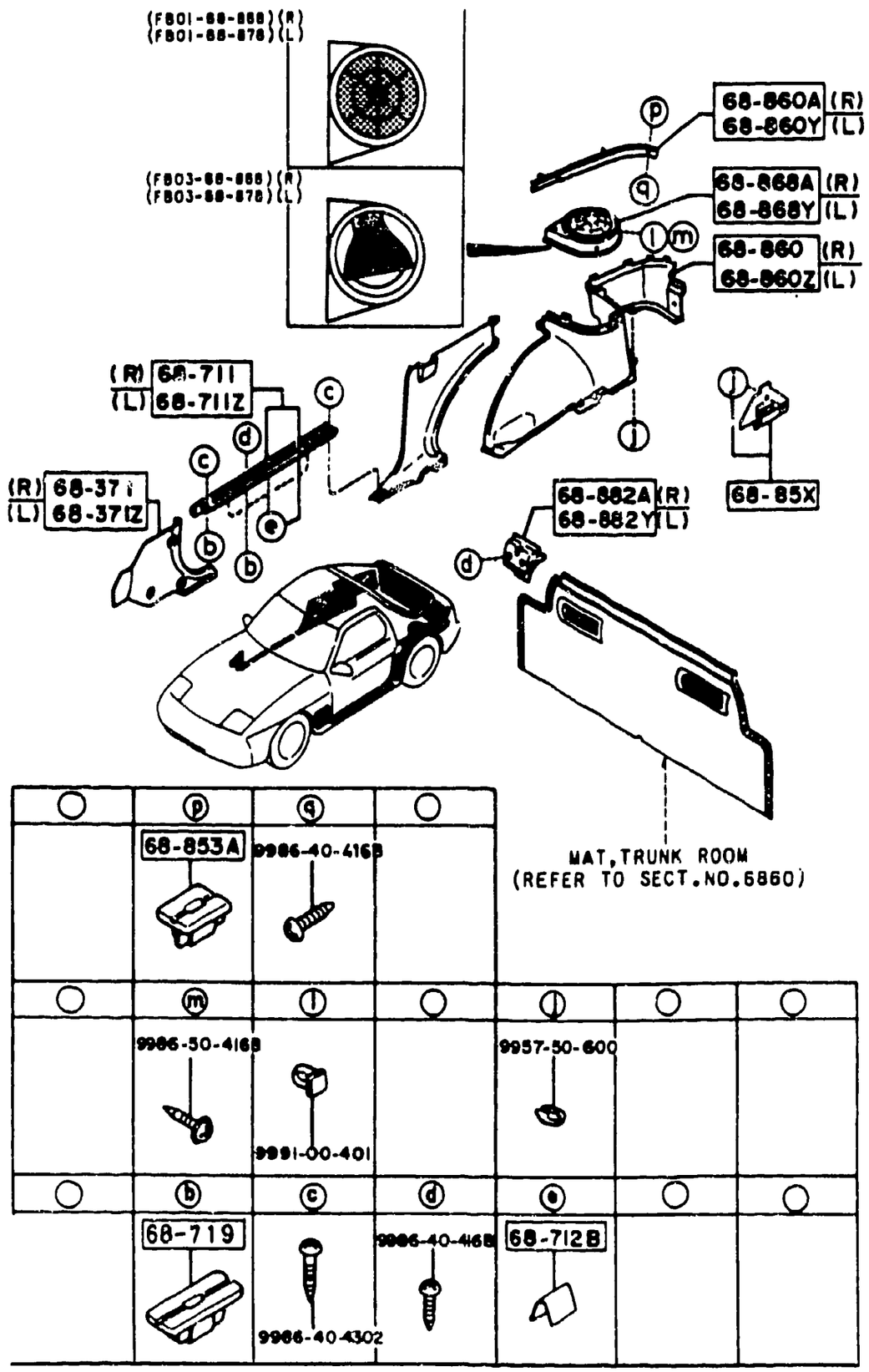

ITEM NO	D-CODE	DESCRIPTION	PART NO.	QTY	MODEL/DESCRIPTION	REMARKS
	68 371	TRIM (R), FRONT SIDE	FB01-68-370	1		
		BLACK	02			
		DARK GRAY	07			
		RED	10			
		BLUE	48			
	68 371Z	TRIM (L), FRONT SIDE	FB01-68-390	1		
		BLACK	02			
		DARK GRAY	07			
		RED	10			
		BLUE	48			
	68 711	PLATE (R), FRONT SCUFF	FB01-68-710A	1		
		BLACK	02			
		DARK GRAY	07			
		RED	10			
		BLUE	48			
	68 711Z	PLATE (L), FRONT SCUFF	FB01-68-720A	1		
		BLACK	02			
		DARK GRAY	07			
		RED	10			
		BLUE	48			
	68 712B	CLIP	B003-68-712	12		
	68 719	GROMMET, SCREW	H001-68-719A	12		
		<AN>	H001-68-719B	12		
	68 853A	GROMMET, SCREW-T SIDE TRIM	FB01-68-853	2		-7601
			FB02-68-853	2		7601-
	68 85X	LID, SIDE-TRUNK ROOM	FB01-68-85X	1		
	68 860	TRIM (R), TRUNK SIDE	FB01-68-86YB	1	BASE, SPORT, GTU W/O SILENCER PAD & CD 2-SEATER	
		DARK GRAY	07			
		RED	10			
		BLUE	48			
			FB02-68-86YB	1	GXL, TURBO W/ SILENCER PAD, W/O CD 2-SEATER	
		DARK GRAY	07			
		RED	10			
		BLUE	48			
			FB05-68-86YA	1	GXL, TURBO W/ SILENCER PAD & CD 2-SEATER	
		DARK GRAY	07			

7601 FC33* -550168

6840A-2 TRIMS & SCUFF PLATES (COUPE)

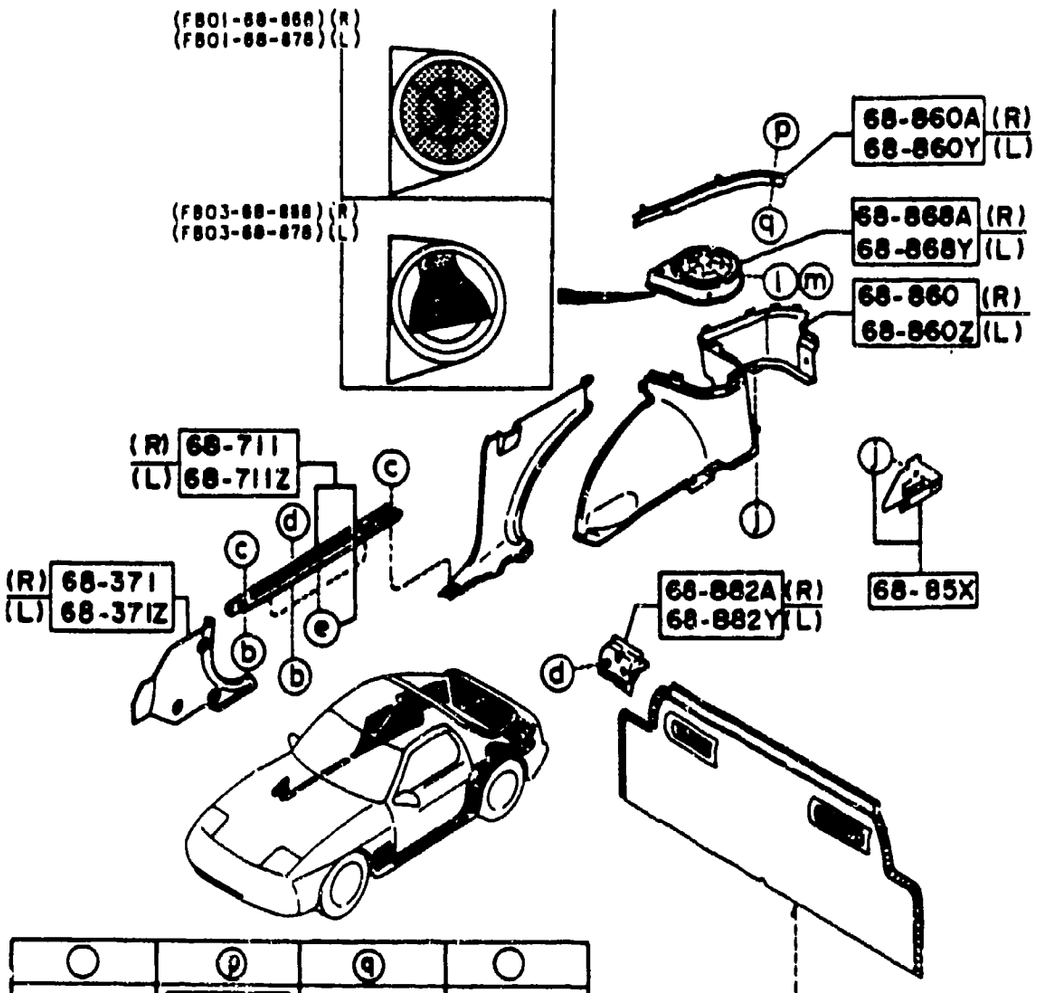

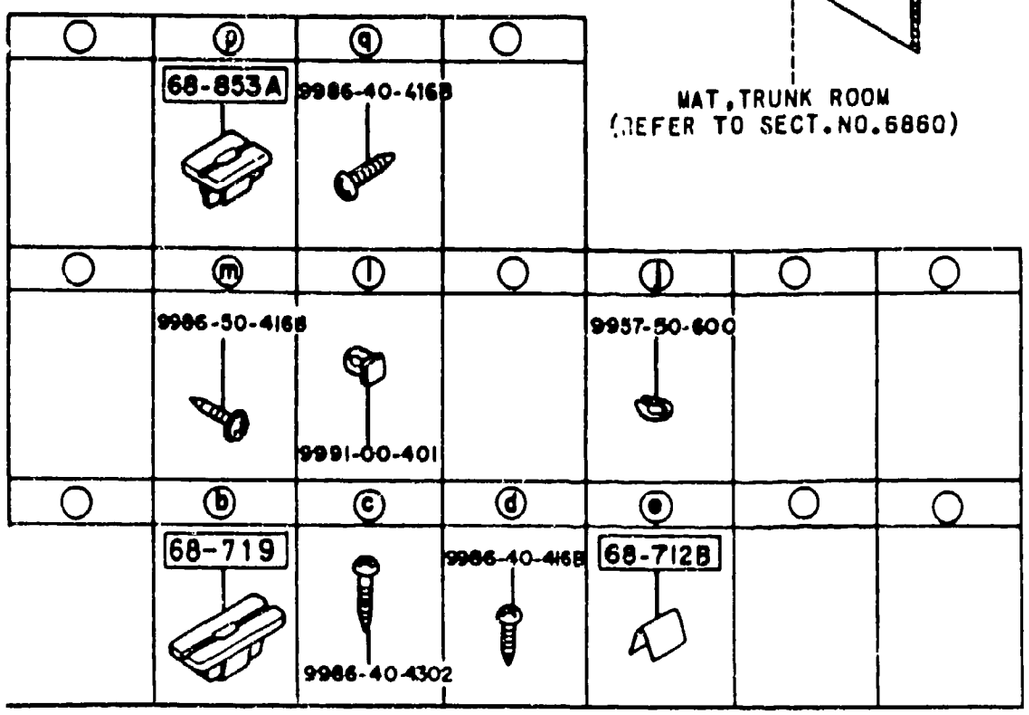

ITEM NO.	D-CODE	DESCRIPTION	PART NO.	QTY	MODEL/DESCRIPTION	REMARKS
	68 860 (CONT'D)	RED	10			
		BLUE	48			
			FB09-68-86YB	1	BASE, SE, SPORT, GTU W/O SILENCER PAD & CD 22	
		DARK GRAY	07			
		RED	10			
		BLUE	48			
			FB10-68-86YB	1	GXL, TURBO W. SILENCER PAD, W·O CD 22	
		DARK GRAY	07			
		RED	10			
		BLUE	48			
			FB39-68-86YA	1	GXL, TURBO W. SILENCER PAD & CD 22	
		DARK GRAY	07			
		RED	10			
		BLUE	48			
	68 860A	TRIM (R), TRUNK SIDE-UPPER	FB01-68 860	1		
		BLACK	02			
		DARK GRAY	07			
		RED	10			
		BLUE	48			
	68 860Y	TRIM (R), TRUNK SIDE-UPPER	FB01 68-870	1		
		BLACK	02			
		DARK GRAY	07			
		RED	10			
		BLUE	48			
	68 860Z	TRIM (L), TRUNK SIDE	FB01-68-87YB	1	BASE, SE, SPORT W. O SILENCER PAD 2-SEATER	
		BLACK	02			
		DARK GRAY	07			
		RED	10			
		BLUE	48			
			FB02-68-87YB	1	GXL, TURBO W SILENCER PAD 2-SEATER	
		BLACK	02			
		DARK GRAY	07			

6840A-3 TRIMS & SCUFF PLATES (COUPE)

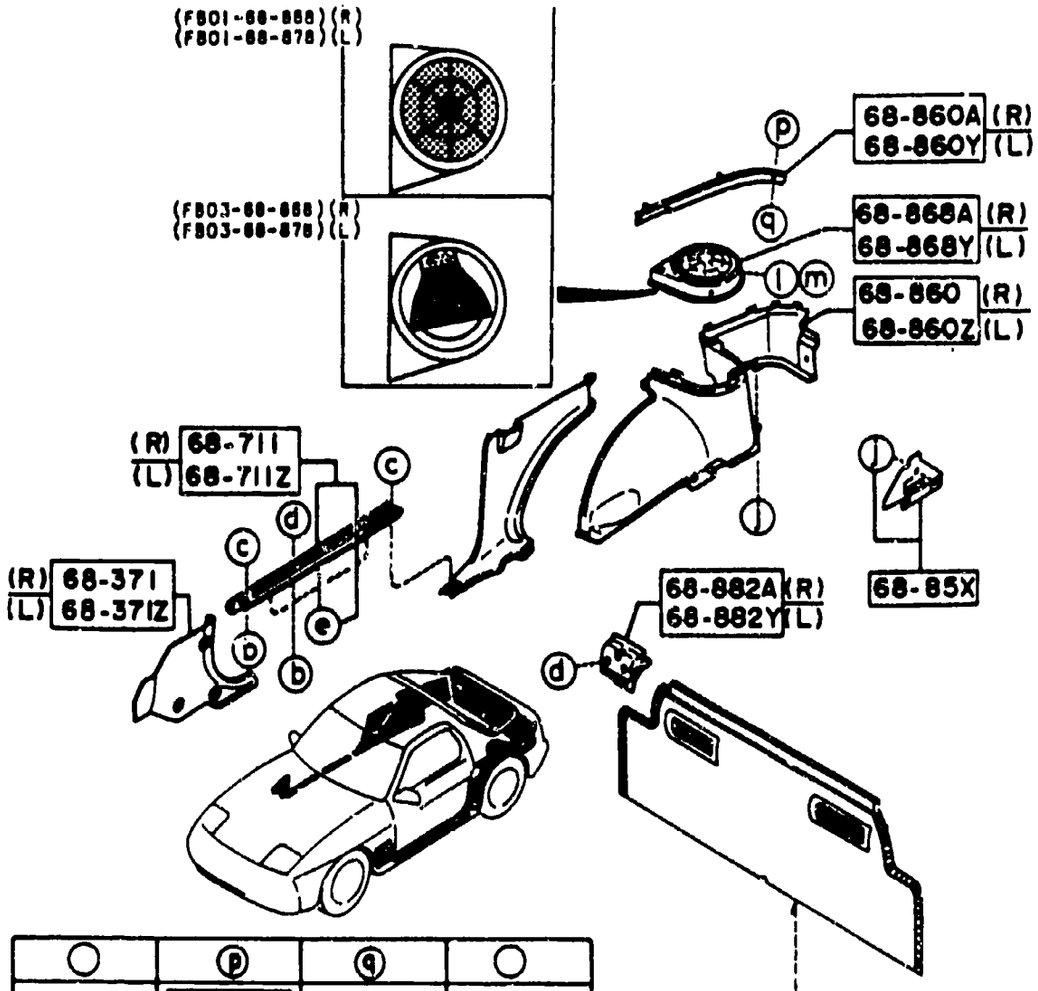

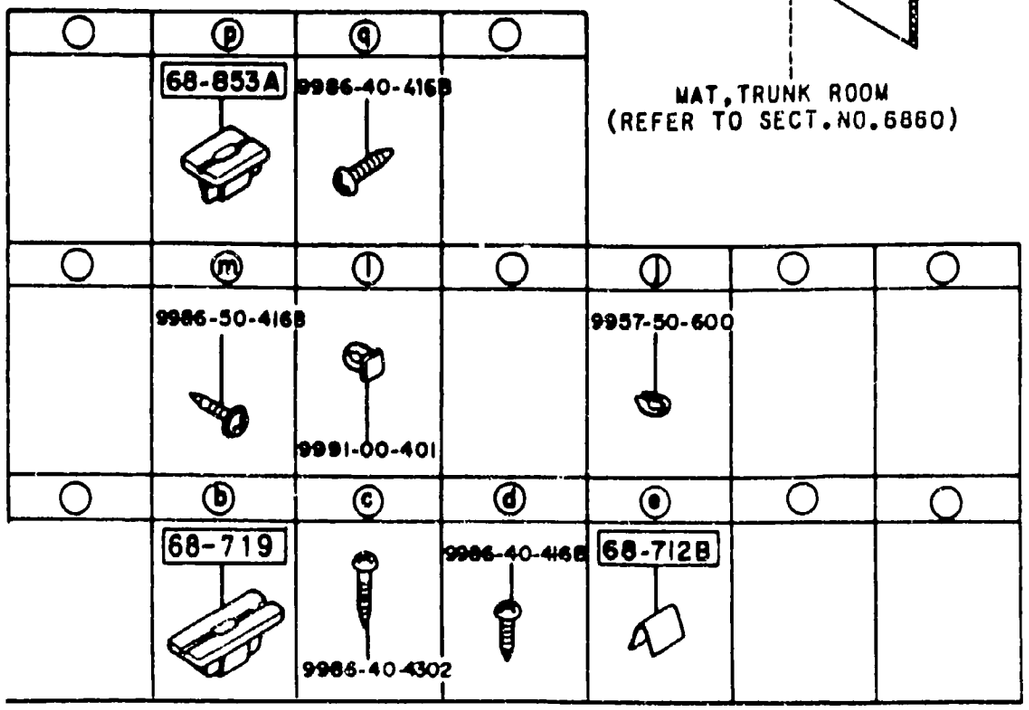

ITEM NO.	D-CODE	DESCRIPTION	PART NO.	QTY	MODEL/DESCRIPTION	REMARKS
	68 860Z (CONT'D)	RED	10			
		BLUE	48			
			FB09-68-87YB	1	BASE, SE, SPORT, GTU W/O SILENCER PAD 22	
		DARK GRAY	07			
		RED	10			
		BLUE	48			
			FB10-68-87YB	1	GXL, TURBO W/ SILENCER PAD 22	
		DARK GRAY	07			
		RED	10			
		BLUE	48			
	68 868A	GRILLE (R), SPEAKER-T/TRIM	FB01-68-868	1		
		BLACK	02			
		DARK GRAY	07			
		RED	10			
		BLUE	48			
			FB03-68-868	1	FIN TYPE	
		BLACK	02			
		DARK GRAY	07			
		RED	10			
		BLUE	48			
	68 868Y	GRILLE (R), SPEAKER-T/TRIM	FB01-68-878	1		
		BLACK	02			
		DARK GRAY	07			
		RED	10			
		BLUE	48			
			FB03-68-878	1	METALLIC SILVER	
		BLACK	02			
		DARK GRAY	07			
		RED	10			
		BLUE	48			
	68 882A	COVER (R), T/END TRIM	FB01-68-894B	1		
		BLACK	02			
		DARK GRAY	07			
		RED	10			
		BLUE	48			
	68 882Y	COVER (L), T/END TRIM	FB01-68-895B	1		
		BLACK	02			
		DARK GRAY	07			

6840A-4 TRIMS & SCUFF PLATES (COUPE)

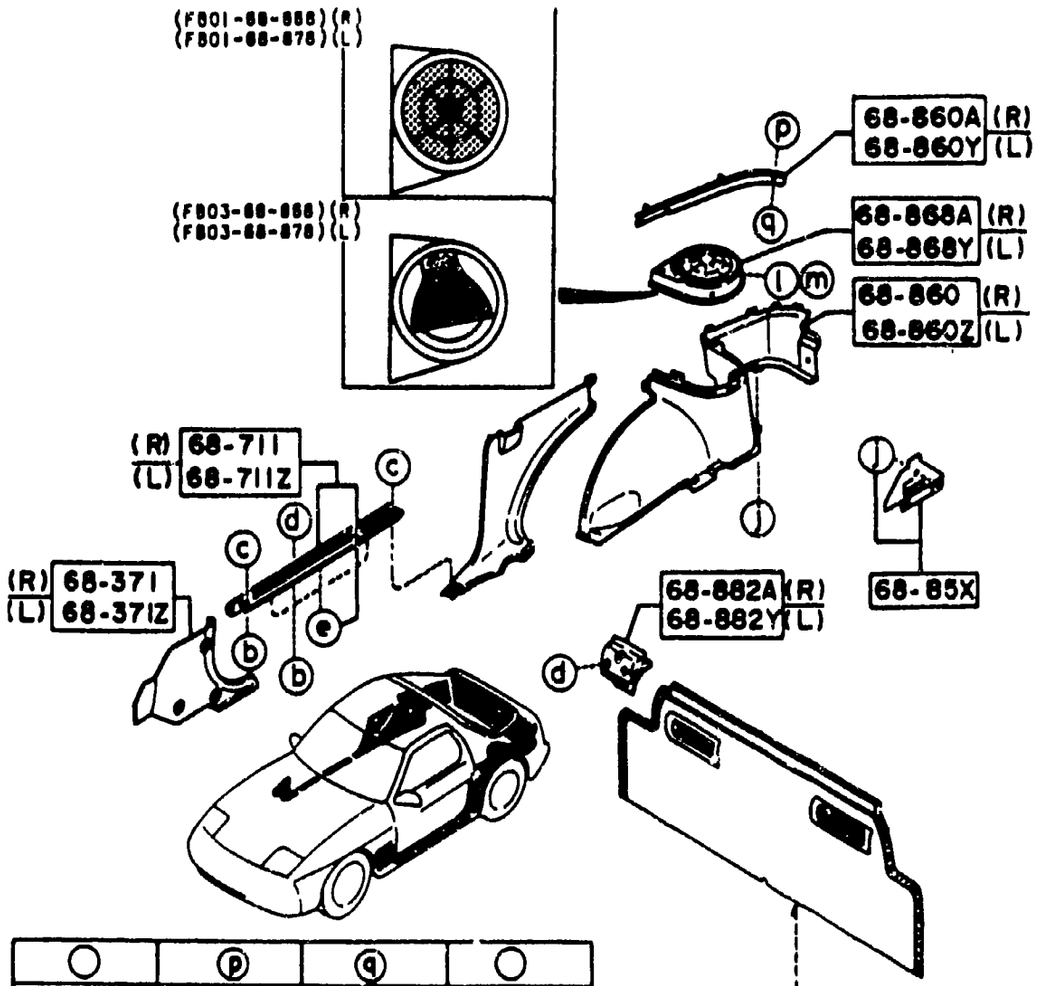

ⓟ 68-853A	ⓠ 9986-40-416B			
ⓜ 9986-50-416B	ⓛ 9991-00-401		ⓚ 9957-50-600	
ⓑ 68-719	ⓒ 9986-40-4302	ⓓ 9986-40-416B	ⓔ 68-712B	

ITEM NO.	D-CODE	DESCRIPTION	PART NO.	QTY	MODEL/DESCRIPTION	REMARKS
	68 882Y (CONT'D)	RED	10			
		BLUE	48			

6840AB-1 TRIMS & SCUFF PLATES (CONVERTIBLE)

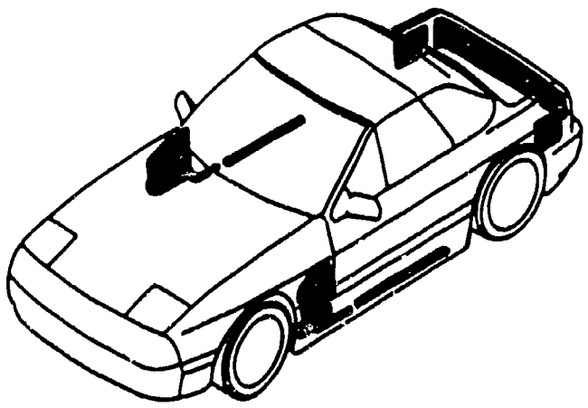

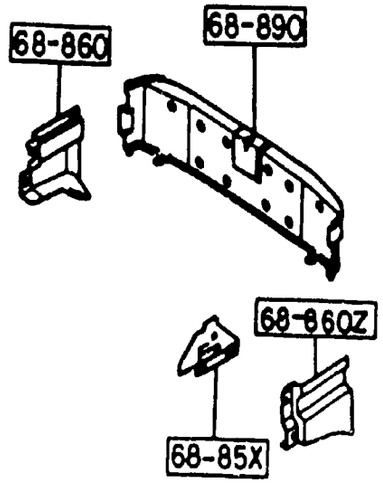

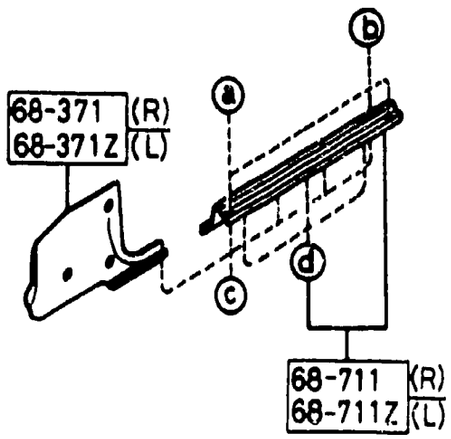

ITEM NO	D-CODE	DESCRIPTION	PART NO.	QTY	MODEL/DESCRIPTION	REMARKS
	68 371	TRIM (R), FRONT SIDE	FB67-68-370	1		
		DARK GRAY	07			
		BLUE	48			
	68 371Z	TRIM (L), FRONT SIDE	FB67-68-390	1		
		DARK GRAY	07			
		BLUE	48			
	68 711	PLATE (R), FRONT SCUFF	FB67-68-710	1		
		GRAY	07			
		BLUE	48			
	68 711Z	PLATE (L), FRONT SCUFF	FB67-68-720	1		
		GRAY	07			
		BLUE	48			
	68 712B	CLIP	B235-68-712	6		
	68 719	GROMMET, SCREW	B235-68-719	10		
	68 85X	LID SIDE-TRUNK ROOM	FB01-68-85X	1		
	68 860	TRIM (R), TRUNK SIDE	FB67-68-861	1		
		DARK GRAY	07			
	68 860Z	TRIM (L), TRUNK SIDE	FB67-68-871	1		
		DARK GRAY	07			
	68 890	TRIM, TRUNK END	FB67-68-891B	1		
		DARK GRAY	07			

ⓐ	ⓑ	ⓒ	ⓓ		
9986-40-430B	9976-90-416B	68-719	68-712B		

6845-1 STORAGE BOX (2-SEATER)

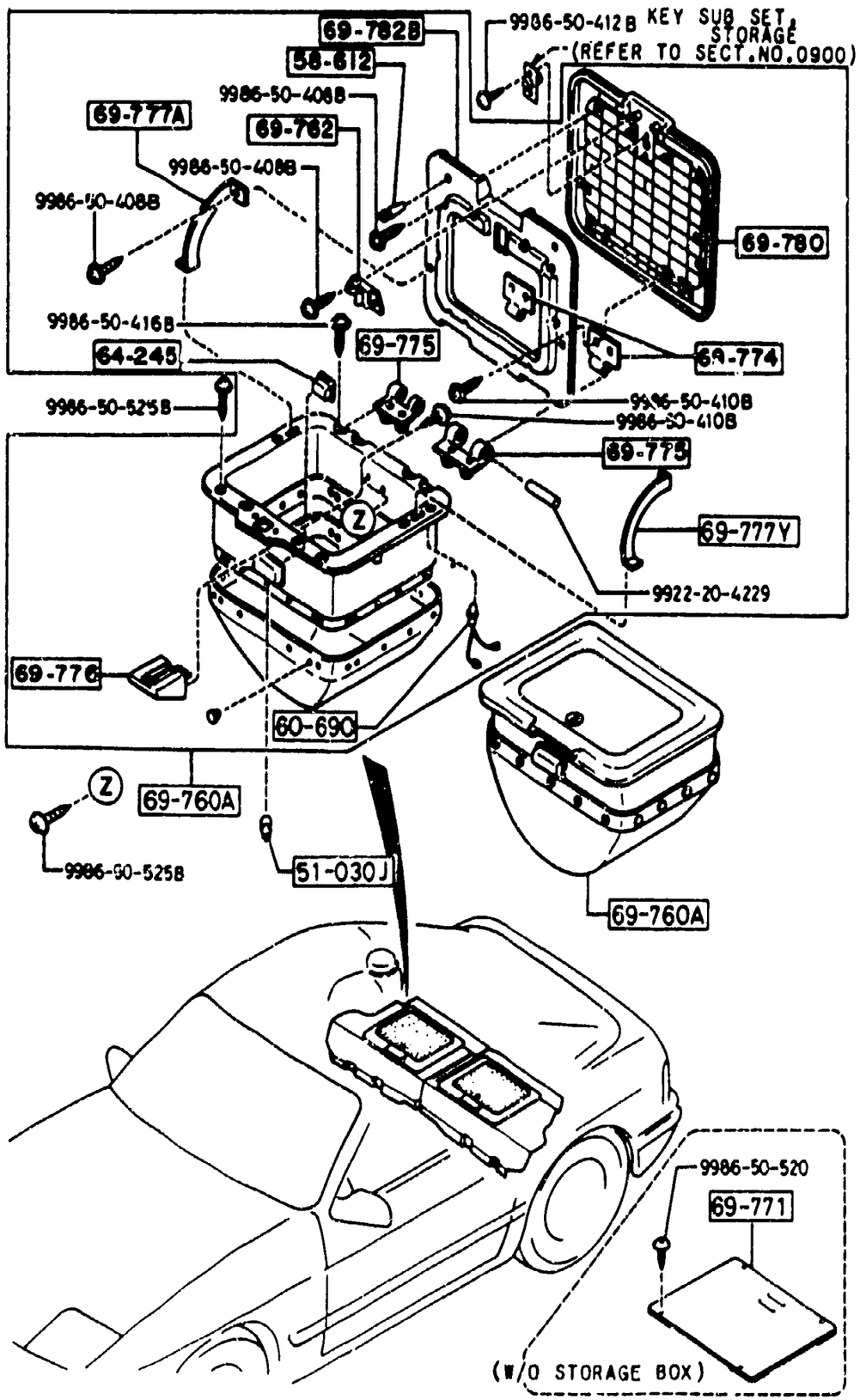

ITEM NO	D-CODE	DESCRIPTION	PART NO.	QTY	MODEL/DESCRIPTION	REMARKS
	51 030J	BULB	0000-11-0194	2	12V 3.4W	
	58 612	CUSHION, RUBBER	0259-58-612	4		
	60 690	SWITCH, GLOVE TRAY	G030-66-540B	2		
	64 245	LENS, SIDE WALL	F J02-64-245	2		
	69 760A	BOX, STORAGE	FB01-69-760	2		
		DARK GRAY	07			
		RED	10			
		BLUE	48			
	69 762	PLATE, LOCK	FB01-69-762	2		
		DARK GRAY	07			
		RED	10			
		BLUE	48			
	69 771	COVER, HOLE-STORAGE BOX	FB02-69-771	2	W/O STORAGE BOX	
	69 774	HINGE NO 1, STORAGE BOX	FB01-69-774	4		
		DARK GRAY	07			
		RED	10			
		BLUE	48			
	69 775	HINGE NO 2, STORAGE BOX	FB01-69-775	4		
		DARK GRAY	07			
		RED	10			
		BLUE	48			
	69 776	STRIKER, STORAGE BOX	FB01-69-776	2		
	69 777A	STOPPER (R), STORAGE BOX	FB01-69-777	2		
	69 777Y	STOPPER (L), STORAGE BOX	FB01-69-778	2		
	69 780	LID, OUTER-STORAGE BOX	FB01-69-780	2		
		DARK GRAY	07			
		RED	10			
		BLUE	48			
	69 782B	LID, INNER-STORAGE BOX	FB01-69-782	2		
		DARK GRAY	07			
		RED	10			
		BLUE	48			

6860A-1 FLOOR MATS & PADS (COUPE) (W/O TURBO)

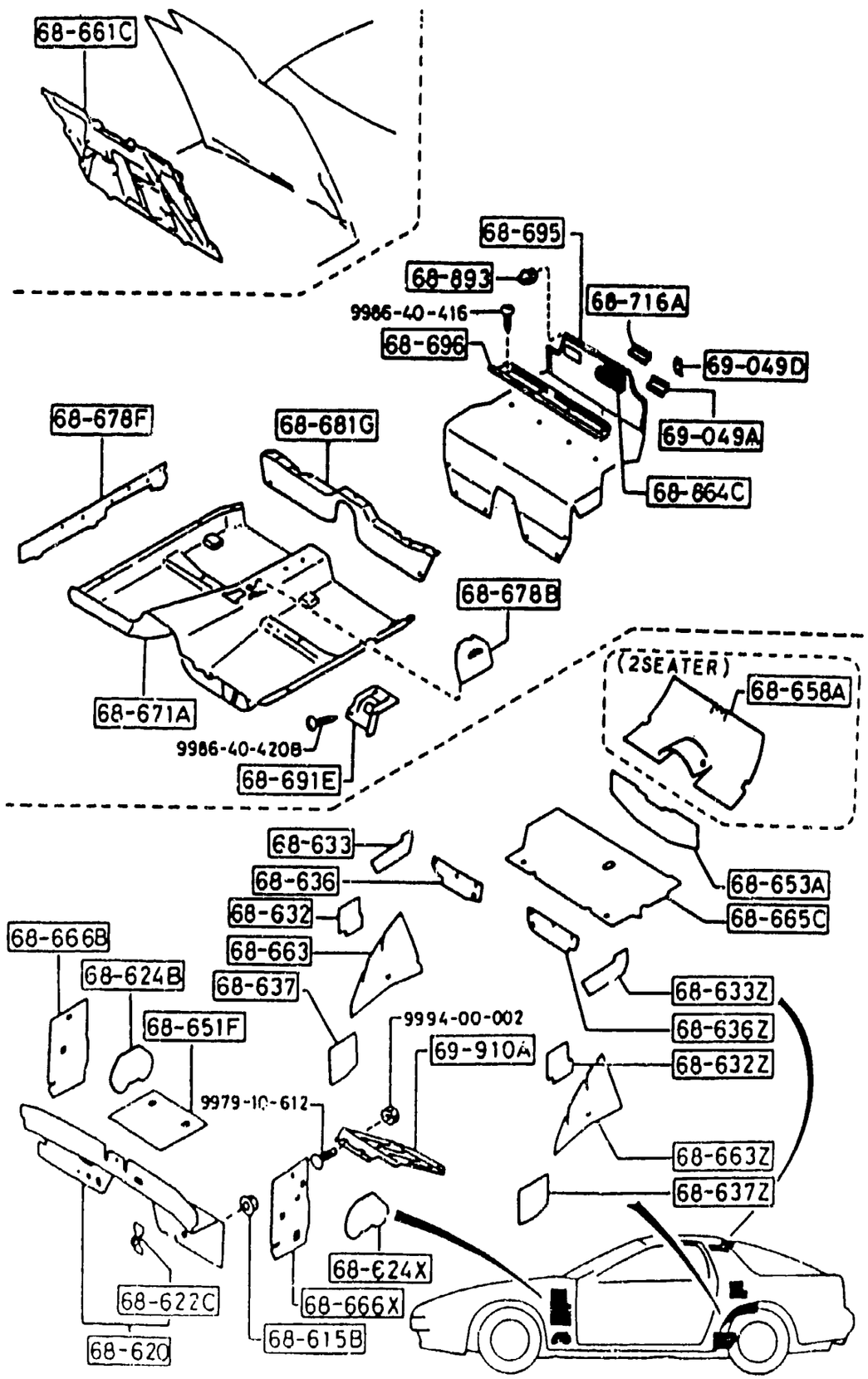

ITEM NO.	D-CODE	DESCRIPTION	PART NO	QTY	MODEL/DESCRIPTION	REMARKS
	68 615B	NUT, FLANGE-CAP	B100-68-615	13		
	68 620	INSULATOR, DASHBOARD	FB02-68-620A	1	W/O SILENCER PAD	
			FB04-68-620A	1	W/ SILENCER PAD	
	68 622C	CLIP, DASHBOARD INSULATOR	FB01-68-622	4		
	68 624B	COVER (R), HOLE-DASHBOARD INSULATOR	FB01-68-624	1		
	68 624X	COVER (L), HOLE-DASHBOARD INSULATOR	FB01-68-625	1		
	68 632	COVER (R), RETRACTOR	FB01-68-632	1		
	68 632Z	COVER (L), RETRACTOR-REAR	FB01-68-642	1		
	68 633	COVER (R), QUARTER PILLAR	FB01-68-633	1		
	68 633Z	COVER (L), QUARTER PILLAR	FB01-68-643	1		
	68 636	INSULATOR (R), CROSS MEMBER	FB01-68-636A	1		
	68 636Z	INSULATOR (L), CROSS MEMBER	FB01-68-646A	1		
	68 637	COVER (R), RETRACTOR-FRONT	FB01-68-637	1		
	68 637Z	COVER (L), RETRACTOR-FRONT	FB01-68-647	1		
	68 651F	PAD, FRONT FLOOR	FB01-68-652	1		
	68 653A	INSULATOR, SPARE TIRE	FB01-68-653	1		
	68 658A	PAD, STORAGE BOX	FB01-68-658	1	STD, SE, SPT	
			FB03-68-658	1	GXL	
	68 661C	INSULATOR, BONNET	FB03-68-661A	1		
	68 663	INSULATOR (R), TIRE HOUSING	FB01-68-663	1	W/O SILENCER PAD	
			FB03-68-663	1	W/ SILENCER PAD	
	68 663Z	INSULATOR (L), TIRE HOUSING	FB01-68-664	1	W/O SILENCER PAD	
			FB03-68-664	1	W/ SILENCER PAD	
	68 665C	PAD, TRUNK	FB01-68-668	1	W/O SILENCER PAD	
			FB03-68-668	1	W/ SILENCER PAD	
	68 666B	PAD (R), SIDE-DASHBOARD	FB03-68-666A	1		
	68 666X	PAD (L), SIDE-DASHBOARD	FB03-68-667A	1		
	68 671A	MAT, FLOOR	FB01-68-671B	1	UNWOVEN CLOTH W/ CONSOLE	
		GRAY	07			
		RED	10			
		BLUE	48			
			FB02-68-671B	1	CARPET W/O SILENCER	
		GRAY	07			
		RED	10			
		BLUE	48			
			FB04-68-671C	1	CARPET W/ SILENCER PAD	
		GRAY	07			
		RED	10			

6860A-2 FLOOR MATS & PADS (COUPE) (W/O TURBO)

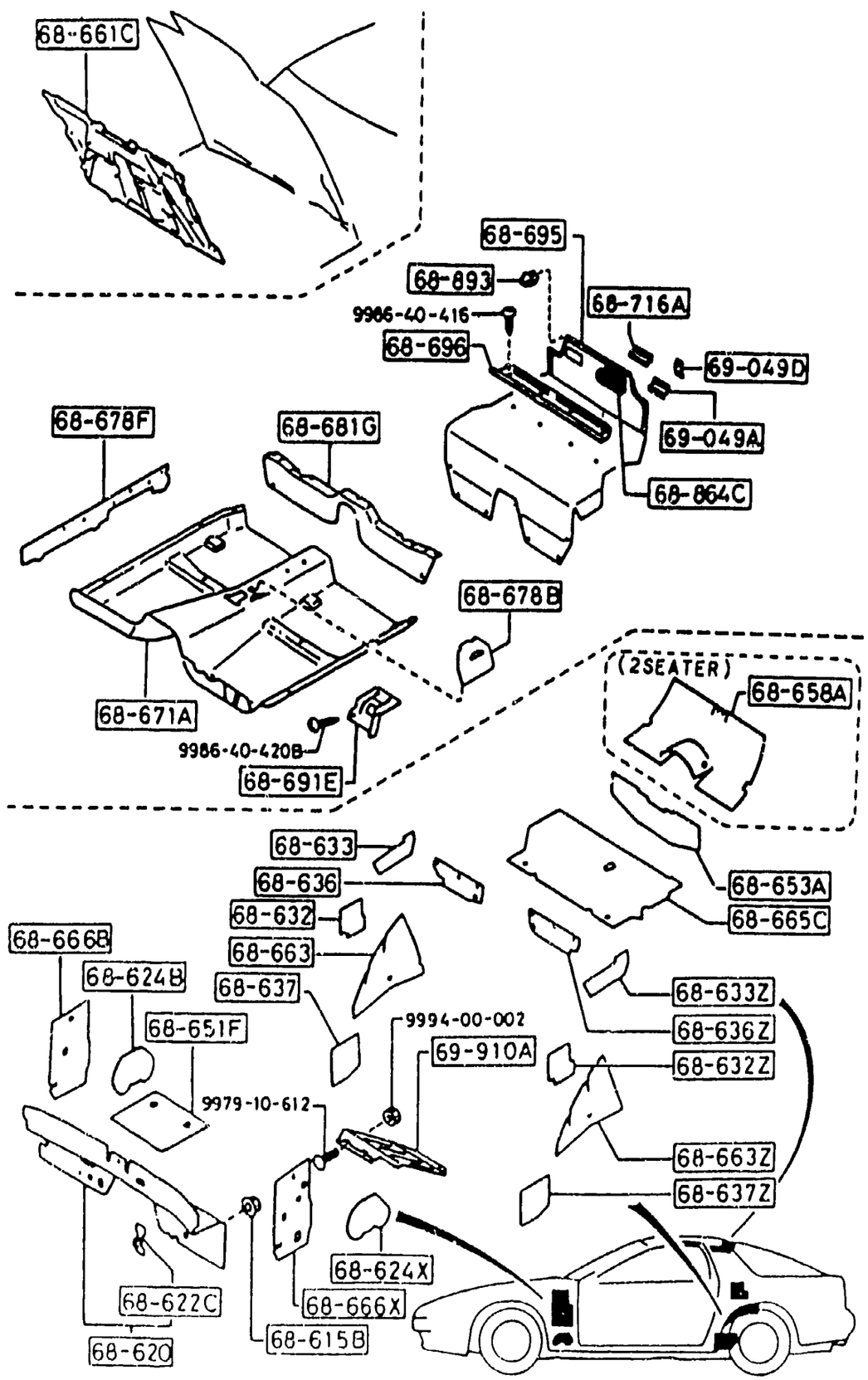

ITEM NO	D-CODE	DESCRIPTION	PART NO	QTY	MODEL/DESCRIPTION	REMARKS
	68 671A (CONT'D)	BLUE	48			
			FB05-68-671	1	CARPET W/ SILENCER PAD	
		GRAY	07			
		RED	10			
		BLUE	48			
	68 678B	MAT, PARKING BRAKE	FB01-68-673	1	UNWOVEN CLOTH	
		GRAY	07			
		RED	10			
		BLUE	48			
			FB02-68-673	1	CARPET	
		GRAY	07			
		RED	10			
		BLUE	48			
			FB67-68-673	1	CARPET	
		DARK GRAY	07			
		RED	10			
		BLUE	48			
	68 678F	GUARD, HARNESS-FRONT	FB01-68-678A	2		
	68 681G	MAT, END-TRUNK ROOM	FB01-68-681A	1	2 2	
		GRAY	07			
		RED	10			
		BLUE	48			
	68 691E	COVER, OPENER-FLOOR MAT	FB01-68-691D	1		
		DARK GRAY	09			
		RED	10			
		BLUE	48			
	68 695	MAT, TRUNK ROOM	FB40-68-69X	1	W/O SILENCER PAD W CARGO STRAP 2 2	
		GRAY DARK GRAY	07			
		RED	10			
		BLUE	48			
			FB01-68-69X	1		
			FB03-68-69X	1	W STORAGE BOX 2-SEATER LX PKG, SPT PKG SE	
		GRAY	07			
		RED	10			
		BLUE	48			

6860A-3 FLOOR MATS & PADS (COUPE) (W/O TURBO)

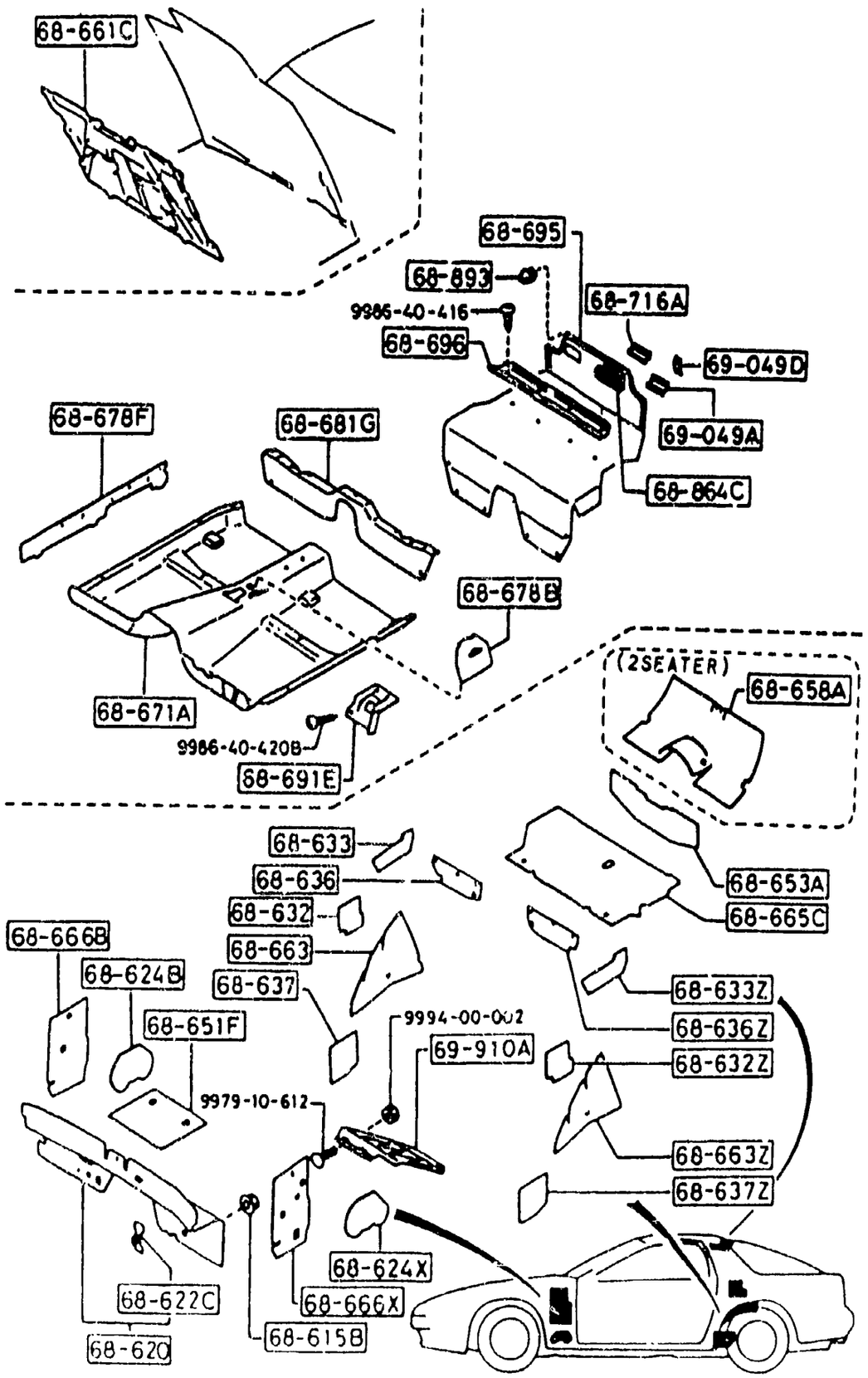

ITEM NO	D-CODE	DESCRIPTION	PART NO	QTY	MODEL/DESCRIPTION	REMARKS
	68 695 (CONT'D)		FB07-68-69X	1	GXL	
					W STORAGE BOX 2-SEATER	
		GRAY	07			
		RED	10			
		BLUE	48			
	68 696	PLATE, MAT SET	FB01-68-696	1	2 SEATER	
		DARK GRAY	07			
		RED	10			
		BLUE	48			
			FB09-68-696B	1	2 2	
		DARK GRAY	07			
		RED	10			
		BLUE	48			
	68 716A	NUT, SPEED	FB03-68-662	2		
	68 864C	GRILLE, EXTRACT	FB01-68-864	2	FOR TEMPORARY TIRE	
		DARK GRAY	07			
		RED	10			
		BLUE	48			
	68 893	LATCH TRUNK END TRIM	FB01-68-893	2		
		DARK GRAY	07			
		RED	10			
		BLUE	48			
	69 049A	NUT, SPEED	FB04-68-862	2		
	69 049D	NUT, SPEED	FB05-68 862	4		
	69 910A	SUPPORT, FOOT	FB01-69-697A	1		

SECTION INDEX -- BODY

STARTING LOCATION	SECT NO	SECTION NAME
3 - C 3	6682	AUDIO SYSTEMS (ANTENNA & SPEAKER)
3 - F 3	6684	AUDIO SYSTEMS (NOISE SUPPRESSOR & GROUND CORD)
3 - G 3	6700	WIRING HARNESSES (FRONT & REAR) (COUPE) (W/O ANTI-LOCK BRAKE SYSTEM)
3 - H 3	6700A	WIRING HARNESSES (FRONT & REAR) (COUPE) (ANTI-LOCK BRAKE SYSTEM)
3 - I 3	6700B	WIRING HARNESSES (FRONT & REAR) (CONVERTIBLE)
3 - J 3	6701	WIRING HARNESSES (ENGINE & TRANSMISSION) (COUPE) (W/O ANTI-LOCK BRAKE SYSTEM)
3 - K 3	6701A	WIRING HARNESSES (ENGINE & TRANSMISSION) (COUPE) (ANTI-LOCK BRAKE SYSTEM)
3 - L 3	6701B	WIRING HARNESSES (ENGINE & TRANSMISSION) (CONVERTIBLE)
3 - M 3	6702	WIRING HARNESSES (DASHBOARD) (COUPE) (W/O ANTI-LOCK BRAKE SYSTEM)
3 - N 3	6702A	WIRING HARNESSES (DASHBOARD) (COUPE) (ANTI-LOCK BRAKE SYSTEM)
3 - C 4	6702B	WIRING HARNESSES (DASHBOARD) (CONVERTIBLE)
3 - D 4	6703	WIRING HARNESSES (DOOR, FLOOR CEILING)
3 - E 4	6704	WIRING HARNESS CLAMPS
3 - G 4	6720	WINDSHIELD WASHER
3 - I 4	6730	WINDSHIELD WIPERS
3 - J 4	6740	WIPER MOTOR COMPONENTS (FRONT)
3 - K 4	6750	WINDOW WIPER & WASHER (REAR) (COUPE)
3 - L 4	6760	WINDOW WIPER MOTOR COMPONENTS (REAR) (COUPE)
3 - M 4	6800A	CEILING TRIMS (COUPE)
3 - N 4	6800AB	CEILING TRIMS (CONVERTIBLE)
3 - C 5	6810	ROLLBAR (CONVERTIBLE)
3 - D 5	6820A	PILLAR TRIMS (COUPE)
3 - E 5	6820AA	PILLAR TRIMS (CONVERTIBLE)
3 - F 5	6840A	TRIMS & SCUFF PLATES (COUPE)
3 - J 5	6840AB	TRIMS & SCUFF PLATES (CONVERTIBLE)
3 - K 5	6845	STORAGE BOX (2-SEATER)
3 - L 5	6860A	FLOOR MATS & PADS (COUPE) (W/O TURBO)
3 - C 6	6860AA	FLOOR MATS & PADS (COUPE, TURBO)
3 - E 6	6860AB	FLOOR MATS & PADS (CONVERTIBLE)
3 - G 6	6865A	TRIM CLIPS & FASTENERS (COUPE)
3 - H 6	6865AA	TRIM CLIPS & FASTENERS (CONVERTIBLE)
3 - J 6	6870	SERVICE TOOLS
3 - C 7	6900A	VISORS, ASSIST HANDLES & MIRRORS
3 - H 7	6930	CAUTION PLATES & LABELS
3 - J 7	7250	QUARTER WINDOW & TRIMS
3 - K 7	7800	SPOILERS & RELATED PARTS
3 - L 7	7900	ACCESSORIES-CONSOLE LID

6860AA-1 FLOOR MATS & PADS (COUPE) (TURBO)

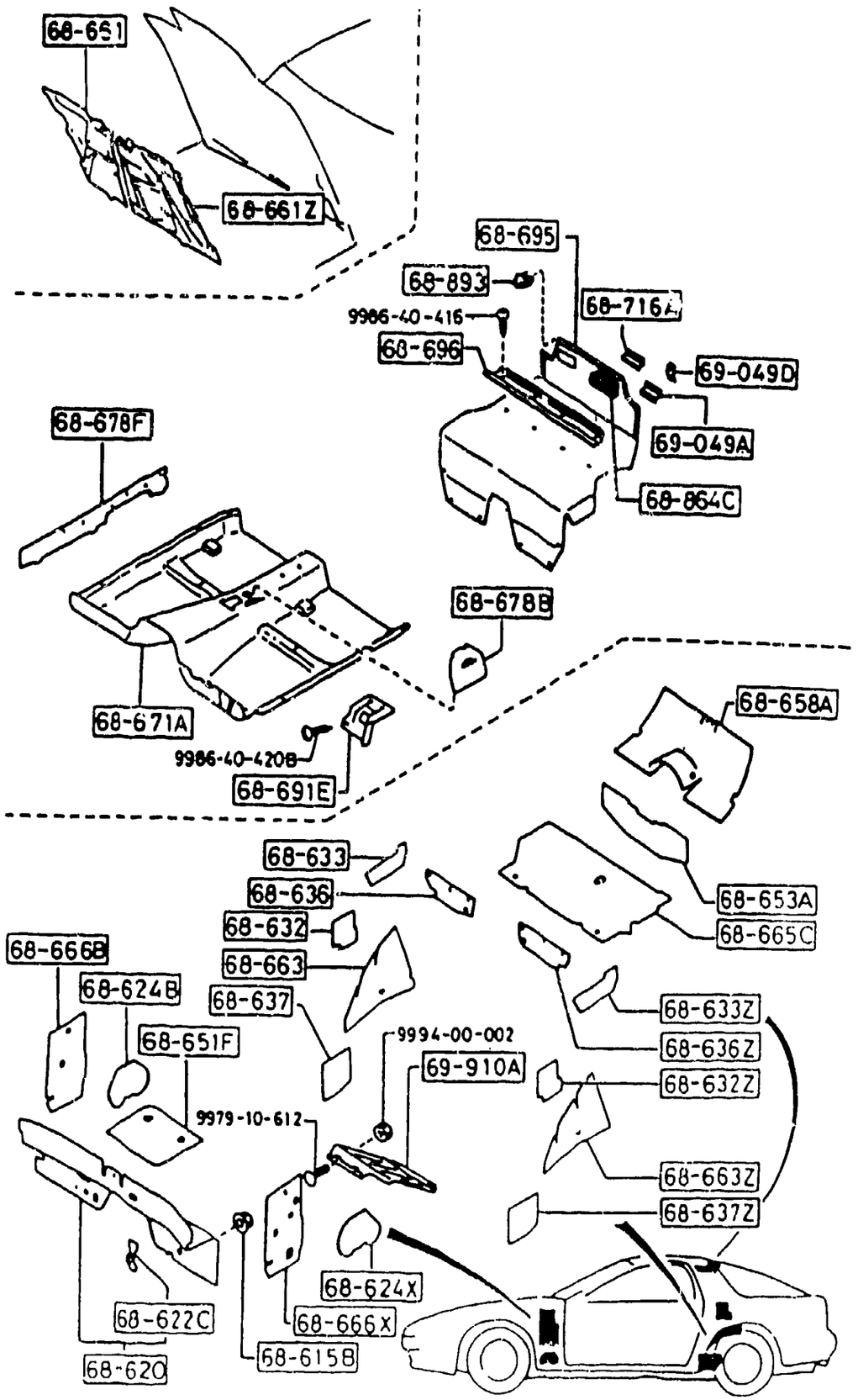

ITEM NO	D-CODE	DESCRIPTION	PART NO	QTY	MODEL/DESCRIPTION	REMARKS
	68 615B	NUT, FLANGE-CAP	B100-68-615	13		
	68 620	INSULATOR, DASHBOARD	FB04-68-620A	1		
	68 622C	CLIP, DASHBOARD INSULATOR	FB01-68-622	4		
	68 624B	COVER (R), HOLE-DASHBOARD INSULATOR	FB01-68-624	1		
	68 624X	COVER (L), HOLE-DASHBOARD INSULATOR	FB01-68-625	1		
	68 632	COVER (R), RETRACTOR	FB01-68-632	1		
	68 632Z	COVER (L), RETRACTOR-REAR	FB01-68-642	1		
	68 633	COVER (R), QUARTER PILLAR	FB01-68-633	1		
	68 633Z	COVER (L), QUARTER PILLAR	FB01-68-643	1		
	68 636	INSULATOR (R), CROSS MEMBER	FB01-68-636A	1		7701-
	68 636Z	INSULATOR (L), CROSS MEMBER	FB01-68-646A	1		7701-
	68 637	COVER (R), RETRACTOR-FRONT	FB01-68-637	1		
	68 637Z	COVER (L), RETRACTOR-FRONT	FB01-68-647	1		
	68 651F	PAD, FRONT FLOOR	FB01-68-652	1		
	68 653A	INSULATOR, SPARE TIRE	FB01-68-653	1		
	68 658A	PAD, STORAGE BOX	FB03-68-658	1		
	68 661	INSULATOR (R), HOOD	F046-68-661B	1		
	68 661Z	INSULATOR (L), HOOD	F046-68-662A	1		
	68 663	INSULATOR (R), TIRE HOUSING	FB03-68-663	1		
	68 663Z	INSULATOR (L), TIRE HOUSING	FB03-68-664	1		
	68 665C	PAD, TRUNK	FB03-68-668	1		
	68 666B	PAD (R), SIDE-DASHBOARD	FB03-68-666A	1		
	68 666X	PAD (L), SIDE-DASHBOARD	FB03-68-667A	1		
	68 671A	MAT, FLOOR	FB04-68-671C	1		-7701
		GRAY	07			
		RED	10			
		BLUE	48			
			FB05-68-671A	1		7701-
		GRAY	07			
		RED	10			
		BLUE	48			
	68 678B	MAT, PARKING BRAKE	FB02-68-673	1		-7701
		GRAY	07			
		RED	10			
		BLUE	48			
			FB67-68-673	1		7701-
		DARK GRAY	07			
		RED	10			
		BLUE	48			
	68 678F	GUARD, HARNESS-FRONT	FBC1-68-678A	2		

7701 FC33* -550169

6860AA-2 FLOOR MATS & PADS (COUPE) (TURBO)

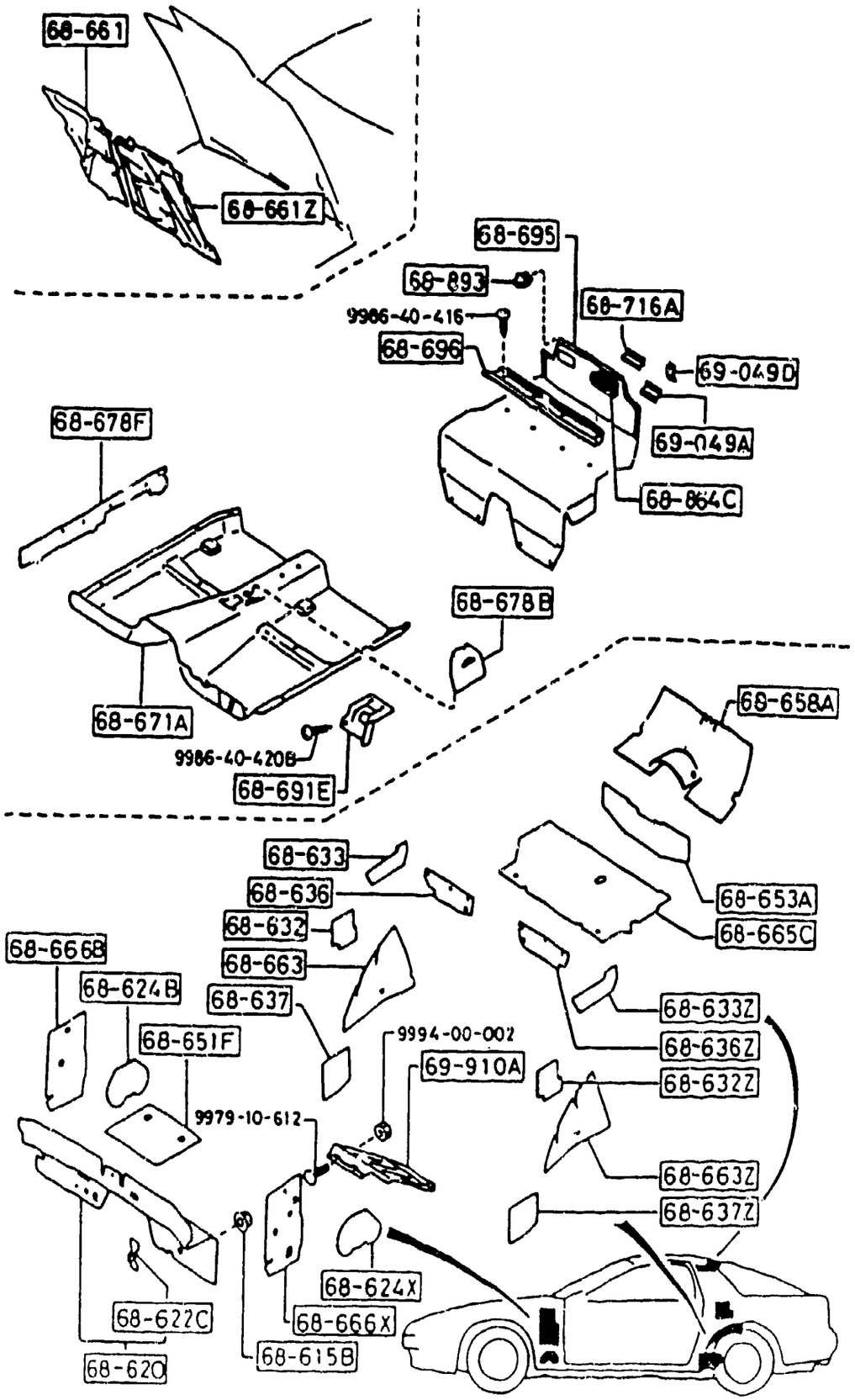

ITEM NO.	D-CODE	DESCRIPTION	PART NO.	QTY	MODEL/DESCRIPTION	REMARKS
	68 691E	COVER, OPENER-FLOOR MAT	FB01-68-691D	1		
		DARK GRAY	09			
		RED	10			
		BLUE	48			
	68 695	MAT, TRUNK ROOM	FB07-68-69X	1	W/ STORAGE BOX	-7701
		GRAY	07			
		RED	10			
		BLUE	48			
	68 696	PLATE, MAT SET	FB01-68-696	1		
		DARK GRAY	07			
		RED	10			
		BLUE	48			
	68 716A	NUT, SPEED	FB03-68-862	2		
	68 864C	GRILLE, EXTRACT	FB01-68-864	2	FOR TEMPORARY TIRE	
		DARK GRAY	07			
		RED	10			
		BLUE	48			
	68 893	LATCH, TRUNK END TRIM	FB01-68-893	2		
		DARK GRAY	07			
		RED	10			
		BLUE	48			
	69 049A	NUT, SPEED	FB04-68-862	2		
	69 049D	NUT, SPEED	FB05-68-862	4		
	69 910A	SUPPORT, FOOT	FB01-69-697A	1		

7701 FC33* -550169

6860AB-1 FLOOR MATS & PADS (CONVERTIBLE)

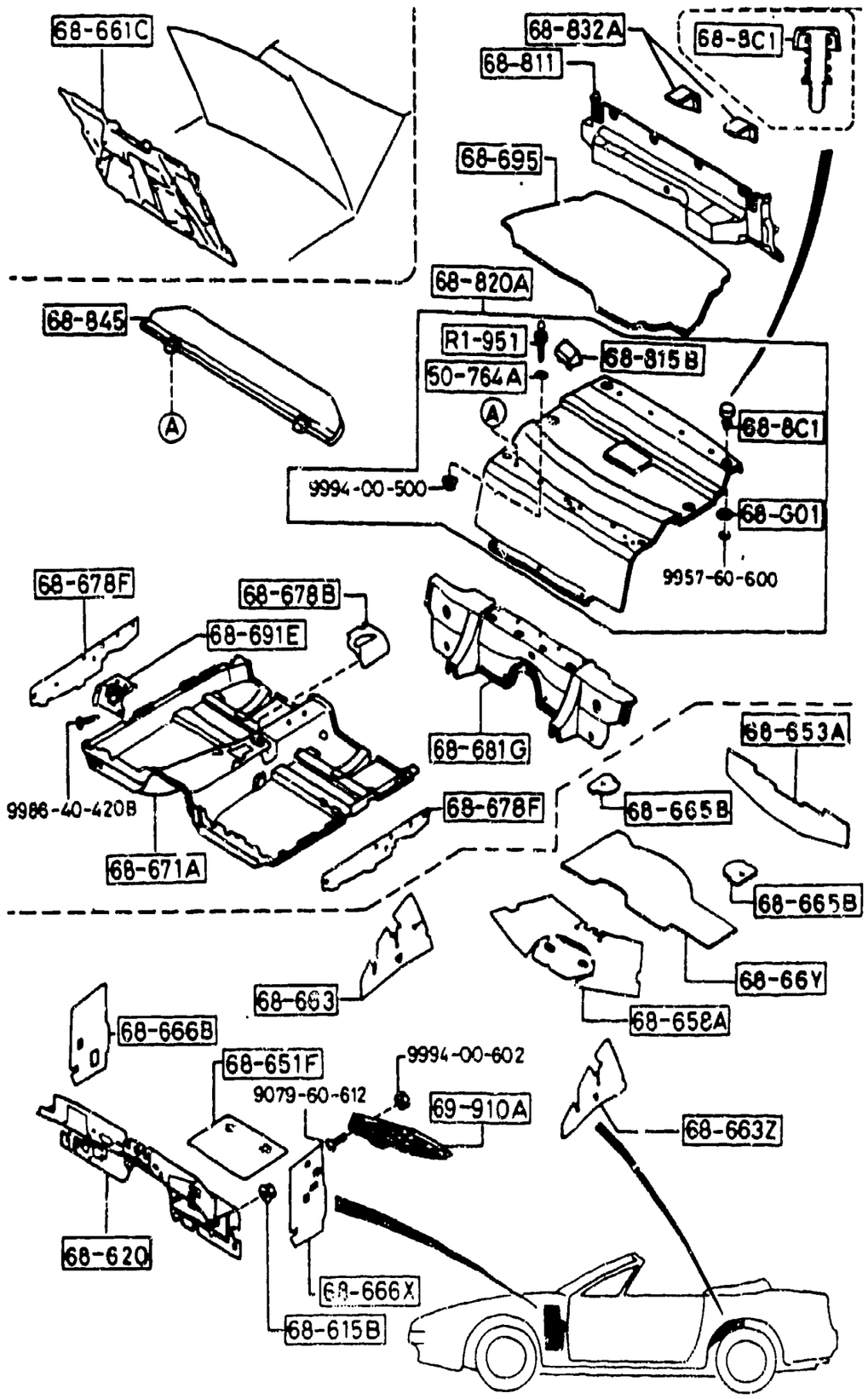

ITEM NO.	D-CODE	DESCRIPTION	PART NO.	QTY	MODEL/DESCRIPTION	REMARKS
	50 764A	WASHER, COVER-SPARE TIRE	FB67-50-764A	2		
	68 615B	NUT, FLANGE-CAP	B100-68-615	11		
	68 620	INSULATOR, DASHBOARD	FB67-68-620	1		
	68 651F	PAD, FRONT FLOOR	FB01-68-652	1		
	68 653A	INSULATOR, SPARE TIRE	FB01-68-653	1		
	68 658A	PAD, STORAGE BOX	FB67-68-658	1		
	68 661C	INSULATOR, BONNET	FB03-68-661A	1		
	68 663	INSULATOR (R), TIRE HOUSING	FB01-68-663	1		
	68 663Z	INSULATOR (L), TIRE HOUSING	FB01-68-664	1		
	68 665B	PAD, SUSPENSION	FB67-68-665	2		
	68 666B	PAD (R), SIDE-DASHBOARD	FB03-68-666A	1		
	68 666X	PAD (L), SIDE-DASHBOARD	FB03-68-667A	1		
	68 66Y	PAD, FLOOR-REAR	FB67-68-66Y	1		
	68 671A	MAT, FLOOR	FB67-68-671	1		
		GRAY	07			
		BLUE	48			
	68 678B	MAT, PARKING BRAKE	FB67-68-673	1		
		DARK GRAY	07			
		RED	10			
		BLUE	48			
	68 678F	GUARD, HARNESS-FRONT	FB67-68-678	2		
	68 681G	MAT, END-TRUNK ROOM	FB67-68-681	1		
		GRAY	07			
		BLUE	48			
	68 691E	COVER, OPENER-FLOOR MAT	FB01-68-691D	1		
		DARK GRAY	09			
		RED	10			
		BLUE	48			
	68 695	MAT, TRUNK ROOM	FB67-68-831B	1		
		GRAY/DARK GRAY	07			
	68 811	BOARD, PARTITION	FB67-68-821A	1		
		DARK GRAY	07			
	68 815B	RUBBER, CUSHION	FB67-68-815	2		
	68 820A	COVER, SPARE TIRE	FB67-68-810C	1		
		GRAY	07			
		BLUE	48			
	68 832A	BRACKET, TRUNK BOARD	FB67-68-832	2		
	68 845	BLOCKER, WIND	FB67-68-845	1		
		DARK GRAY	07			
		BLUE	48			
	68 8C1	FASTENER, TAPPING	FB67-68-8C1	6		

60AB-2 FLOOR MATS & PADS (CONVERTIBLE)

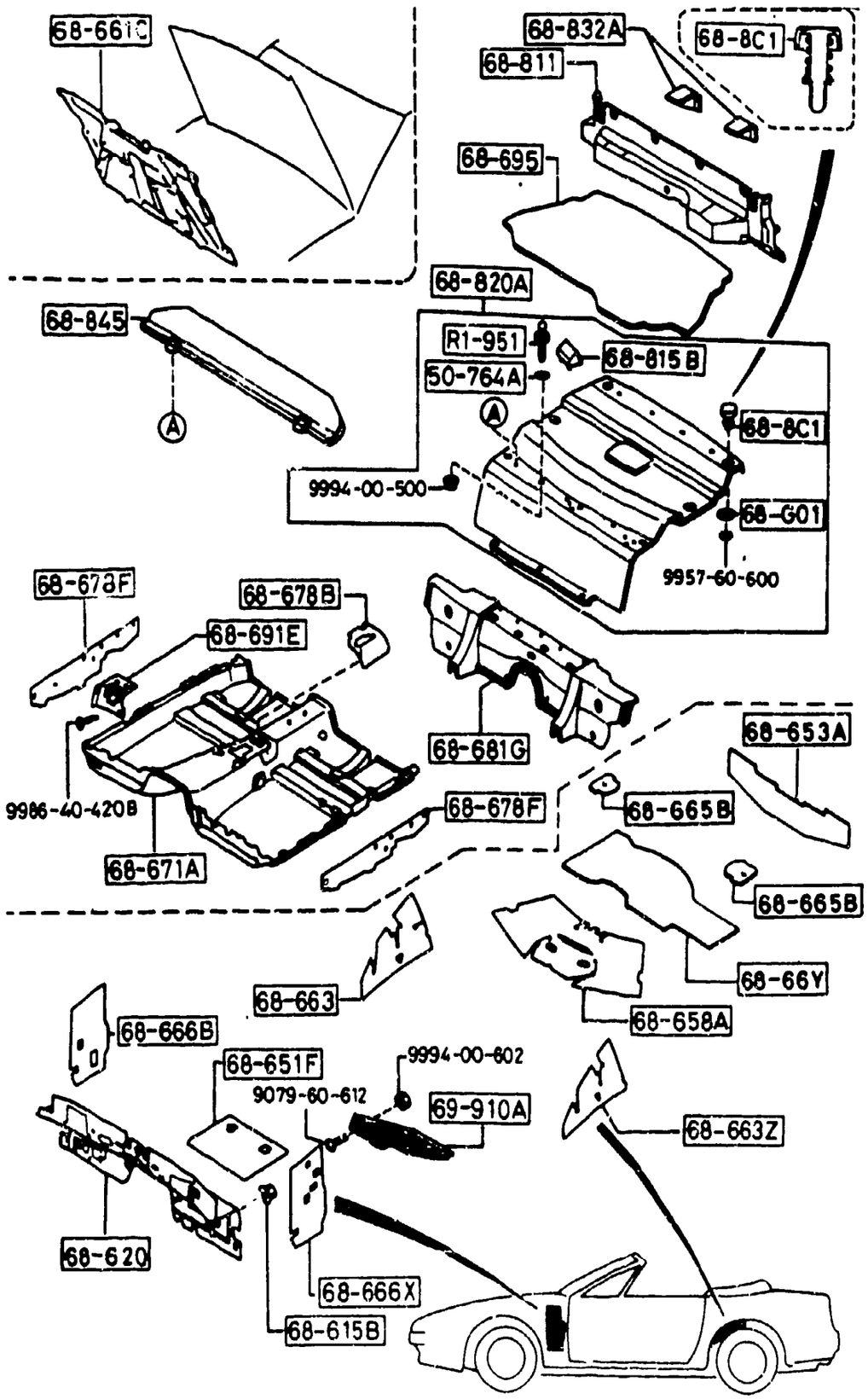

ITEM NO.	D-CODE	DESCRIPTION	PART NO.	QTY	MODEL/DESCRIPTION	REMARKS
	68 8C1 (CONT'D)	DARK GRAY	0Y			
	69 910A	SUPPORT, FOOT	FB01-69-697A	1		
	76 071	SILENCER, FLOOR	0208-76-071	2		
	R1 951	HOOK 'A', HOOD COVER-REAR	B235-R1-951C	2		

6865A-1 TRIM CLIPS & FASTENERS (COUPE)

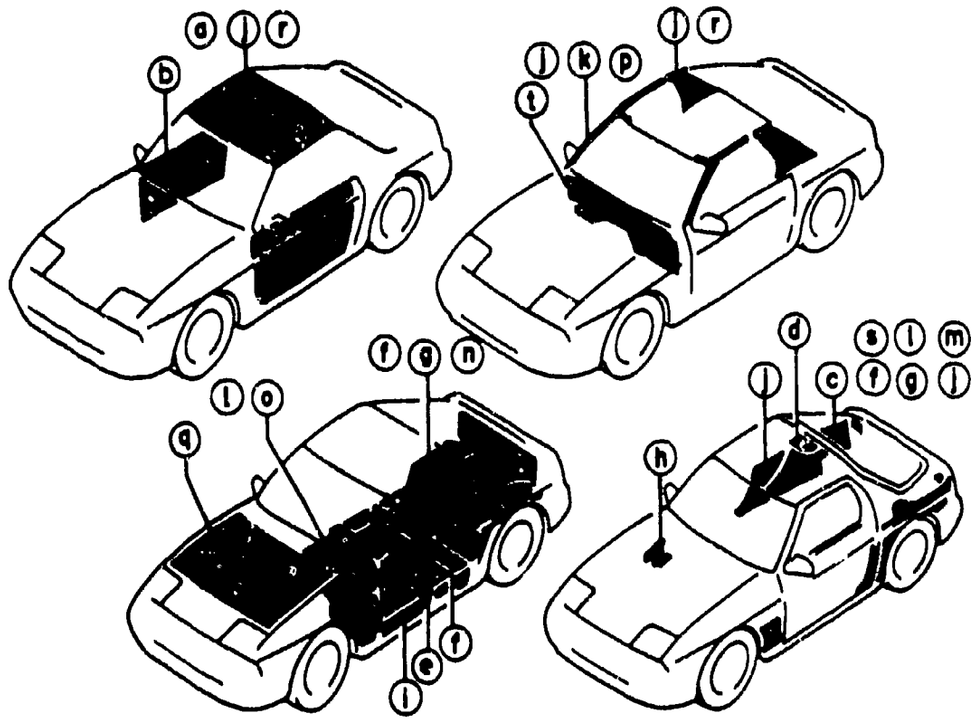

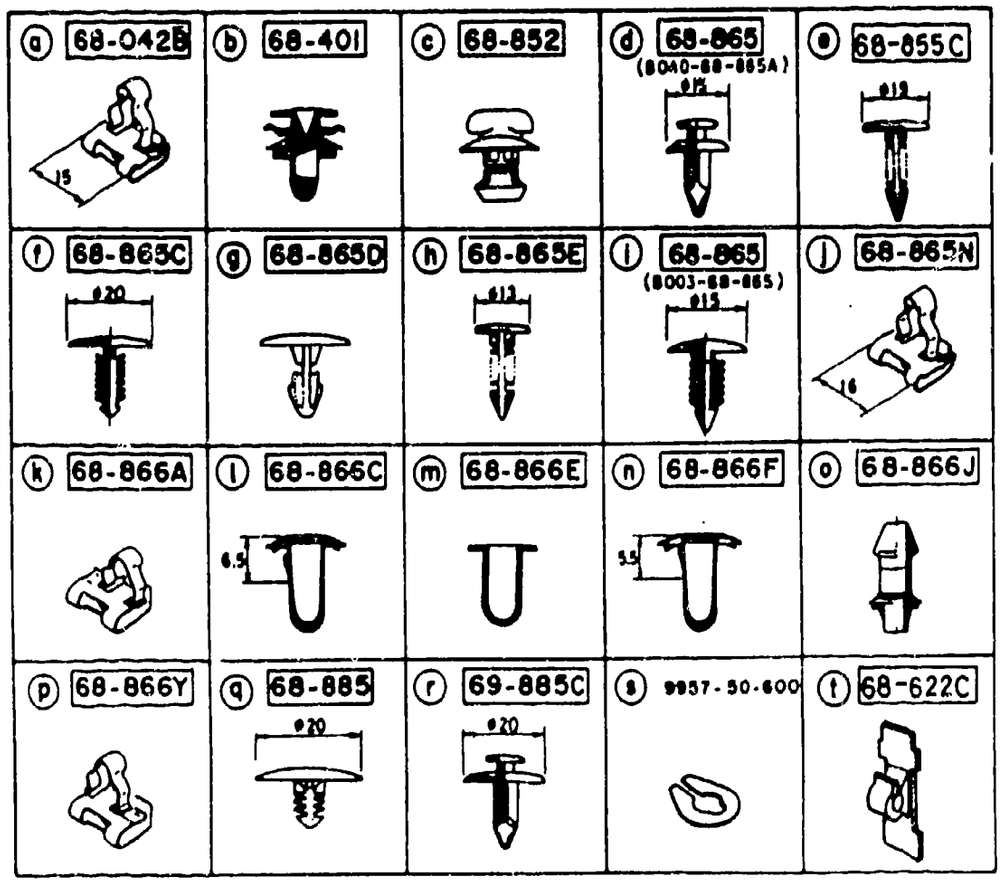

ITEM NO.	D-CODE	DESCRIPTION	PART NO	QTY	MODEL/DESCRIPTION	REMARKS
	68 042B	CLIP, GARNISH	FB01-68-042	5		
	68 401	FASTENER, DOOR TRIM	B100-68-401	18		
	68 622C	CLIP, DASHBOARD INSULATOR	FB01-68-622	4		
	68 852	FASTNER, TURN-SIDE LID	FB01-68-852	3		
	68 855C	FASTENER	G043-68-865B	1		
		DARK GRAY	09			
		RED	11			
		BLUE	48			
	68 865	FASTENER	B040-68-865A	4		
		DARK GRAY	09			
		RED	11			
		BLUE	48			
		GRAY	96			
	68 865C	FASTENER	G032-68-865A	24		
		DARK GRAY	09			
		RED	11			
		BLUE	48			
	68 865D	FASTENER	S083-68-865A	20		
		DARK GRAY	09			
		RED	11			
		BLUE	48			
	68 865E	FASTENER	S049-68-865	6		
		BLACK	00			
		GRAY	09			
		RED	10			
		BLUE	48			
	68 865F	FASTENER	B003-68-865	13		
		OFF-BLACK	65			
	68 865N	CLIP, TRIM	H002-68-865	38		
	68 866A	CLIP (R), TRIM	H003-68-865	2		
	68 866C	FASTENER, SEAL	B235-68-865A	9		
	68 866E	FASTENER, SEAL	0187-58-922	2		
	68 866F	FASTENER, SEAL	G031-68 866B	4		
	68 866J	FASTENER, SEAL	FB01-68-866	1		
	68 866Y	CLIP (L), TRIM	H003-68-866	2		
	68 885	FASTENER	G030-68-885B	16		
		BLACK	00			
	69 885C	FASTENER	UB54-68 885	8		
		BLACK	00			
		DARK GRAY	07			
		BLUE	48			

6865AA-1 TRIM CLIPS & FASTENERS (CONVERTIBLE)

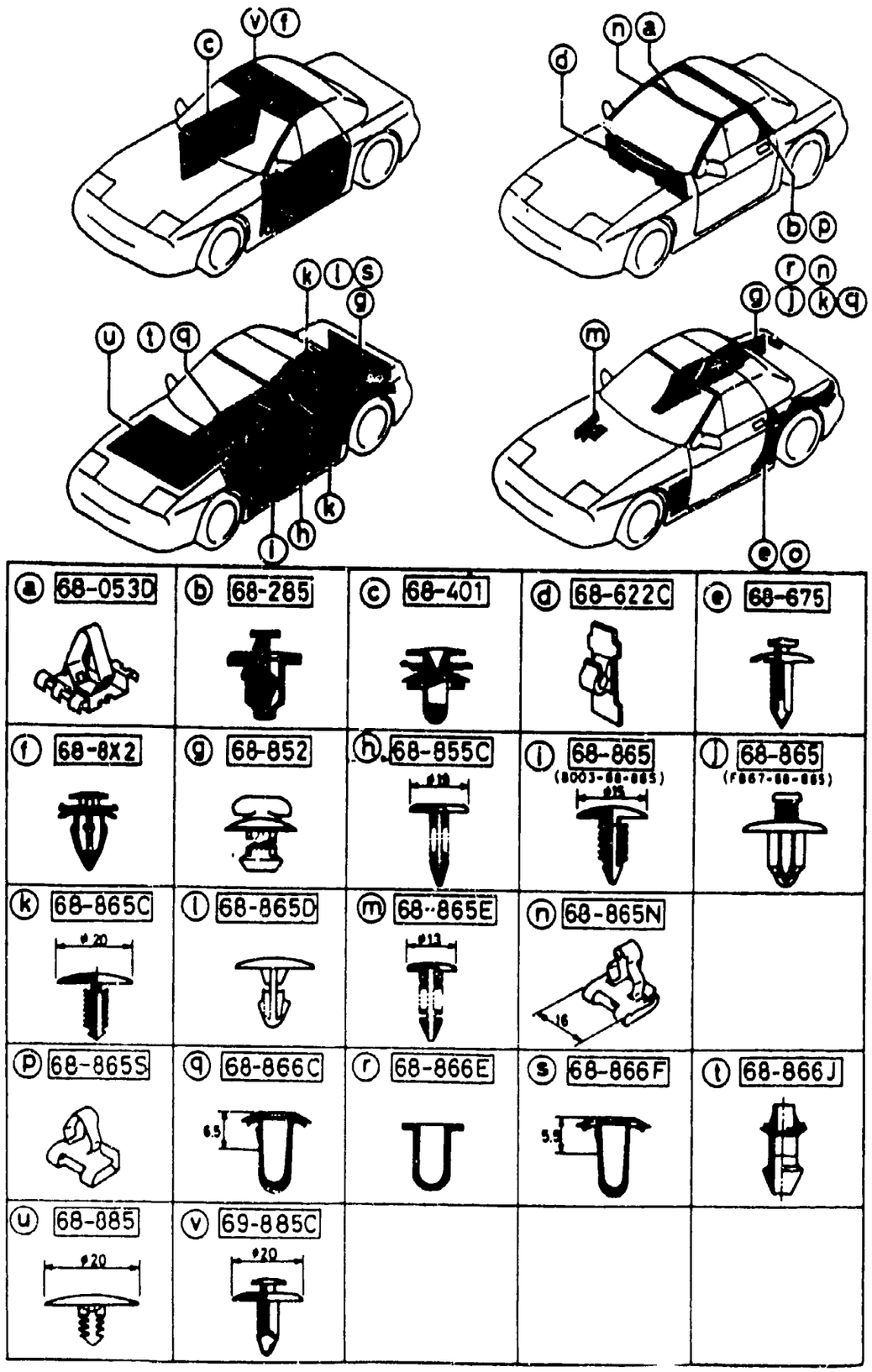

ITEM NO.	D-CODE	DESCRIPTION	PART NO.	QTY	MODEL/DESCRIPTION	REMARKS
	68 053D	CLIP, RR. PILLAR TRIM	B100-68-279	8		
	68 285	FASTENER, HINGE COVER	FB67-68-285	2		
		GRAY	07			
		BLUE	48			
	68 401	FASTENER, DOOR TRIM	B100-68-401	16		
	68 622C	CLIP, DASHBOARD INSULATOR	FB01-68-622	5		
	68 675	FASTENER	B100-68-675	2		
		DARK GRAY	07			
		BLUE	48			
	68 812	FASTENER, TIRE COVER	FB67-68-812	6		
	68 852	FASTENER, TURN-SIDE LID	FB01-68-852	2		
	68 855C	FASTENER	G043-68-865B	1		
		DARK GRAY	09			
		RED	11			
		BLUE	48			
	68 865	FASTENER	B003-68-865	11		
		OFF-BLACK	65			
			FB67-68-865	17		
		GRAY	09			
	68 865C	FASTENER	G032-68-865A	23		
		DARK GRAY	09			
		RED	11			
		BLUE	48			
	68 865D	FASTENER	S083-68-865A	12		
		DARK GRAY	09			
		RED	11			
		BLUE	48			
	68 865E	FASTENER	S049-68-865	10		
		BLACK	00			
		GRAY	09			
		RED	10			
		BLUE	48			
	68 865N	CLIP, TRIM	H002-68-865	16		
	68 865Q	FASTENER	GJ21-68-885A	6		
		GRAY	07			
		BLUE	48			
	68 865S	CLIP, TRIM	GJ12-68-865	6		
	68 866C	FASTENER, SEAL	B235-68-865A	12		
	68 866E	FASTENER, SEAL	0187-58-922	2		
	68 866F	FASTENER, SEAL	G031-68-866B	2		
	68 866J	FASTENER, SEAL	FB01-68-866	1		

6865AA-2 TRIM CLIPS & FASTENERS (CONVERTIBLE)

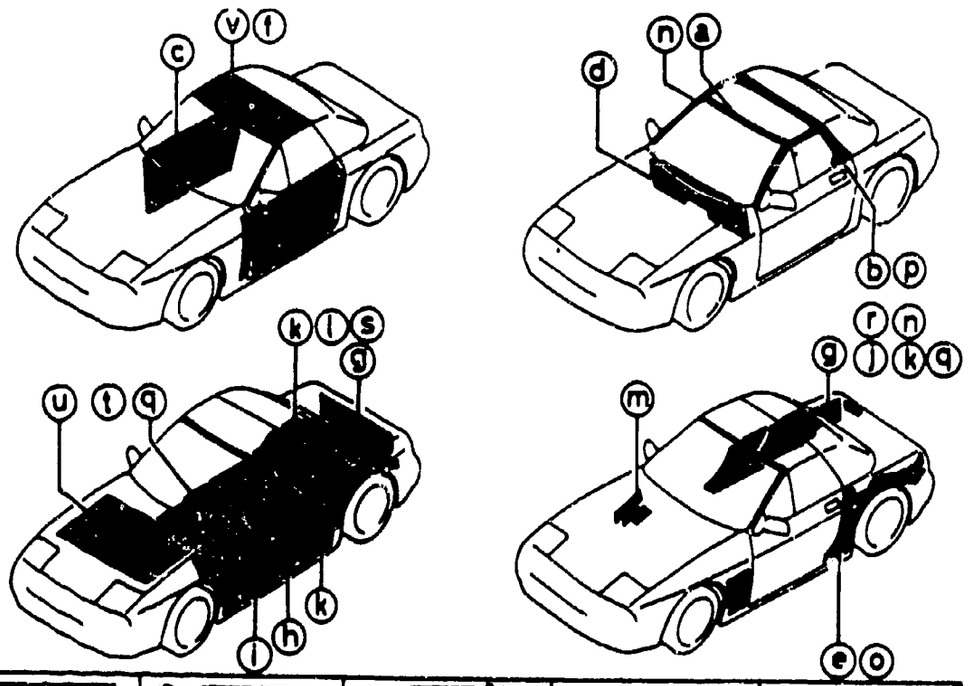

ⓐ 68-053D	ⓑ 68-285	ⓒ 68-401	ⓓ 68-622C	ⓔ 68-675
ⓕ 68-8X2	ⓖ 68-852	ⓗ 68-855C	ⓘ 68-865 (8003-68-885)	ⓙ 68-865 (F867-68-885)
ⓚ 68-865C	ⓛ 68-865D	ⓜ 68-865E	ⓝ 68-865N	
ⓟ 68-865S	ⓠ 68-866C	ⓡ 68-866E	ⓢ 68-866F	ⓣ 68-866J
ⓤ 68-885	ⓥ 69-885C			

ITEM NO	D-CODE	DESCRIPTION	PART NO	QTY	MODEL/DESCRIPTION	REMARKS
	68 885	FASTENER	G030-68-885B	16		
		BLACK	00			
	69 885C	FASTENER	UB54-68-885	4		
		BLACK	00			
		DARK GRAY	07			
		BLUE	48			

6870-1 SERVICE TOOLS

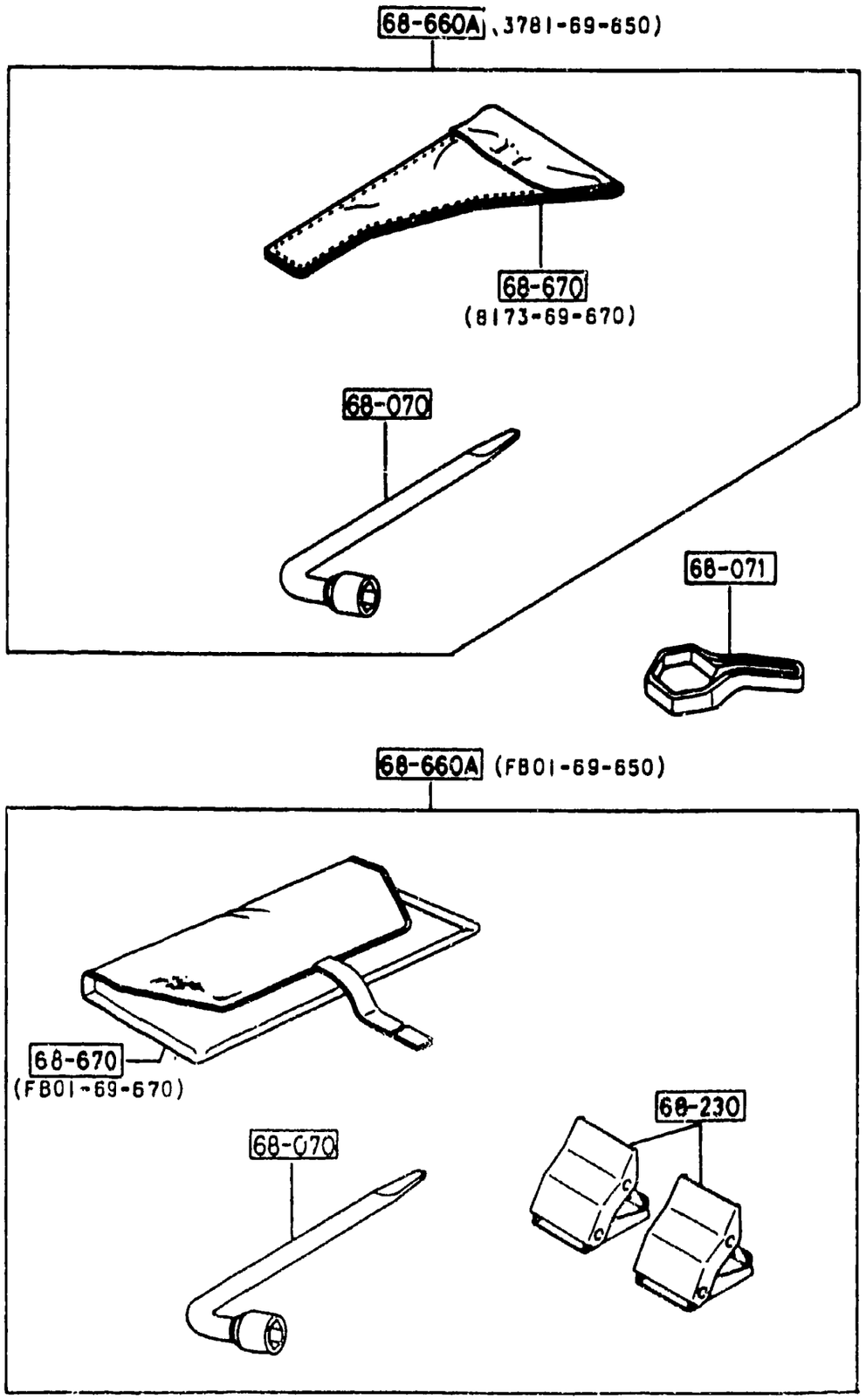

ITEM NO	D-CODE	DESCRIPTION	PART NO.	QTY	MODEL/DESCRIPTION	REMARKS
	68 070	WRENCH, HUB NUT	0810-68-070E	1		
	68 071	WRENCH, WHEEL CAP	F057-68-071	1	CONV.	
	68 230	STOPPER, WHEEL	0208-68-230	2		
	68 660A	TOOL SET	3781-69-650	1		-5B01
			FB01-69-650A	1		5B01-
	68 670	BAG, TOOL	8173-69-670	1		-5B01
			FB01-69-670A	1		5B01-

5B01 FC33* -113629

SECTION INDEX -- BODY

STARTING LOCATION	SECT NO	SECTION NAME
3 - C 3	6682	AUDIO SYSTEMS (ANTENNA & SPEAKER)
3 - F 3	6684	AUDIO SYSTEMS (NOISE SUPPRESSOR & GROUND CORD)
3 - G 3	6700	WIRING HARNESSES (FRONT & REAR) (COUPE) (W O ANTI-LOCK BRAKE SYSTEM)
3 - H 3	6700A	WIRING HARNESSES (FRONT & REAR) (COUPE) (ANTI-LOCK BRAKE SYSTEM)
3 - I 3	6700B	WIRING HARNESSES (FRONT & REAR) (CONVERTIBLE)
3 - J 3	6701	WIRING HARNESSES (ENGINE & T MISSION) (COUPE) (W O ANTI-LOCK BRAKE SYSTEM)
3 - K 3	6701A	WIRING HARNESSES (ENGINE & T MISSION) (COUPE) (ANTI-LOCK BRAKE SYSTEM)
3 - L 3	6701B	WIRING HARNESSES (ENGINE & T MISSION) (CONVERTIBLE)
3 - M 3	6702	WIRING HARNESSES (DASHBOARD) (COUPE) (W O ANTI-LOCK BRAKE SYSTEM)
3 - N 3	6702A	WIRING HARNESSES (DASHBOARD) (COUPE) (ANTI-LOCK BRAKE SYSTEM)
3 - C 4	6702B	WIRING HARNESSES (DASHBOARD) (CONVERTIBLE)
3 - D 4	6703	WIRING HARNESSES (DOOR, FLOOR CEILING)
3 - E 4	6704	WIRING HARNESS CLAMPS
3 - G 4	6720	WINDSHIELD WASHER
3 - I 4	6730	WINDSHIELD WIPERS
3 - J 4	6740	WIPER MOTOR COMPONENTS (FRONT)
3 - K 4	6750	WINDOW WIPER & WASHER (REAR) (COUPE)
3 - L 4	6760	WINDOW WIPER MOTOR COMPONENTS (REAR) (COUPE)
3 - M 4	6800A	CEILING TRIMS (COUPE)
3 - N 4	6800AB	CEILING TRIMS (CONVERTIBLE)
3 - C 5	6810	ROLLBAR (CONVERTIBLE)
3 - D 5	6820A	PILLAR TRIMS (COUPE)
3 - E 5	6820AA	PILLAR TRIMS (CONVERTIBLE)
3 - F 5	6840A	TRIMS & SCUFF PLATES (COUPE)
3 - J 5	6840AB	TRIMS & SCUFF PLATES (CONVERTIBLE)
3 - K 5	6845	STORAGE BOX (2-SEATER)
3 - L 5	6860A	FLOOR MATS & PADS (COUPE) (W O TURBO)
3 - C 6	6860AA	FLOOR MATS & PADS (COUPE) (TURBO)
3 - E 6	6860AB	FLOOR MATS & PADS (CONVERTIBLE)
3 - G 6	6865A	TRIM CLIPS & FASTENERS (COUPE)
3 - H 6	6865AA	TRIM CLIPS & FASTENERS (CONVERTIBLE)
3 - J 6	6870	SERVICE TOOLS
3 - C 7	6900A	VISORS, ASSIST HANDLES & MIRRORS
3 - H 7	6930	CAUTION PLATES & LABELS
3 - J 7	7250	QUARTER WINDOW & TRIMS
3 - K 7	7800	SPOILERS & RELATED PARTS
3 - L 7	7900	ACCESSORIES-CONSOLE LID

6900A-1 VISORS, ASSIST HANDLES & MIRRORS

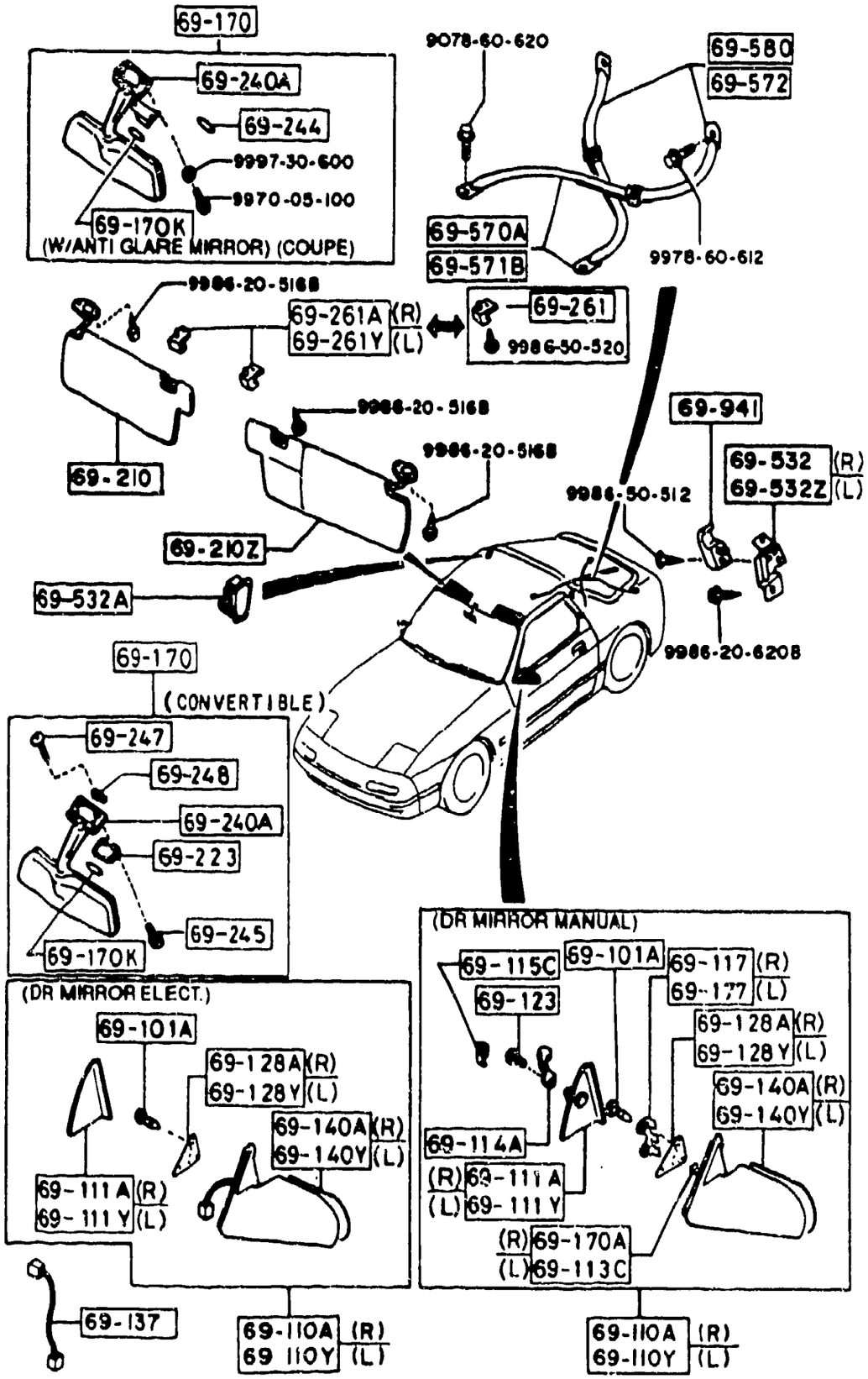

ITEM NO	D-CODE	DESCRIPTION	PART NO	QTY	MODEL/DESCRIPTION	REMARKS
	69 101A	SCREW, DOOR MIRROR	H140-69-126	6		-6501
			G032-69-126	6		6501-
	69 110A	MIRROR (R), DOOR	FB01-69-110A	1	BASE, SE, SPORT MANUAL DOOR MIRROR	-6501
		<C>	FB01-69-110B	1	BASE, SE, SPORT MANUAL DOOR MIRROR REQUIRES BRACKET: F044-69-124A	6501-
			FB11-69-110C	1	GXL ELEC. DOOR MIRROR-BLACK	-6501
		<C>	FB11-69-110D	1	GXL ELEC. DOOR MIRROR-BLACK REQUIRES BRACKET F044-69-124A	6501-
			FB45-69 110	1	'87 TURBO ELEC. DOOR MIRROR-BODY COLOR	-6501
		ARCTIC SILVER METALLIC	J5			
		TORNADO SILVER METALLIC	K8			
		PURE RED	NP			
		BRILLIANT BLACK	PZ			
		DOVER WHITE	WU			
		SATIN GOLD METALLIC	1A			
		ROYAL MAROON METALLIC	3A			
		SAPPHIRE BLUE METALLIC	5A			
		<C>	FB45-69-110A	1	'88 SPORT, GTU, TURBO, CONV. ELEC. DOOR MIRROR-BODY COLOR	6501-
		ARCTIC SILVER METALLIC	J5			
		TORNADO SILVER METALLIC	K8			
		BRILLIANT BLACK	PZ			
		SUNRISE RED	RH			
		CRYSTAL WHITE	UC			7701-
		NOBLE WHITE	WY			
		SATIN GOLD METALLIC	1A			
		CLARET METALLIC	2H			
		SAPPHIRE BLUE METALLIC	5A			
	69 110Y	MIRROR (L), DOOR	FB01-69-170A	1	BASE, SE, SPORT MANUAL DOOR MIRROR	-6501
		<C>	FB01-69-170B	1	BASE, SE, SPORT MANUAL DOOR MIRROR REQUIRES BRACKET: F044-69-184A	6501-

6501 FC33* -146093
7701 FC33* -550169

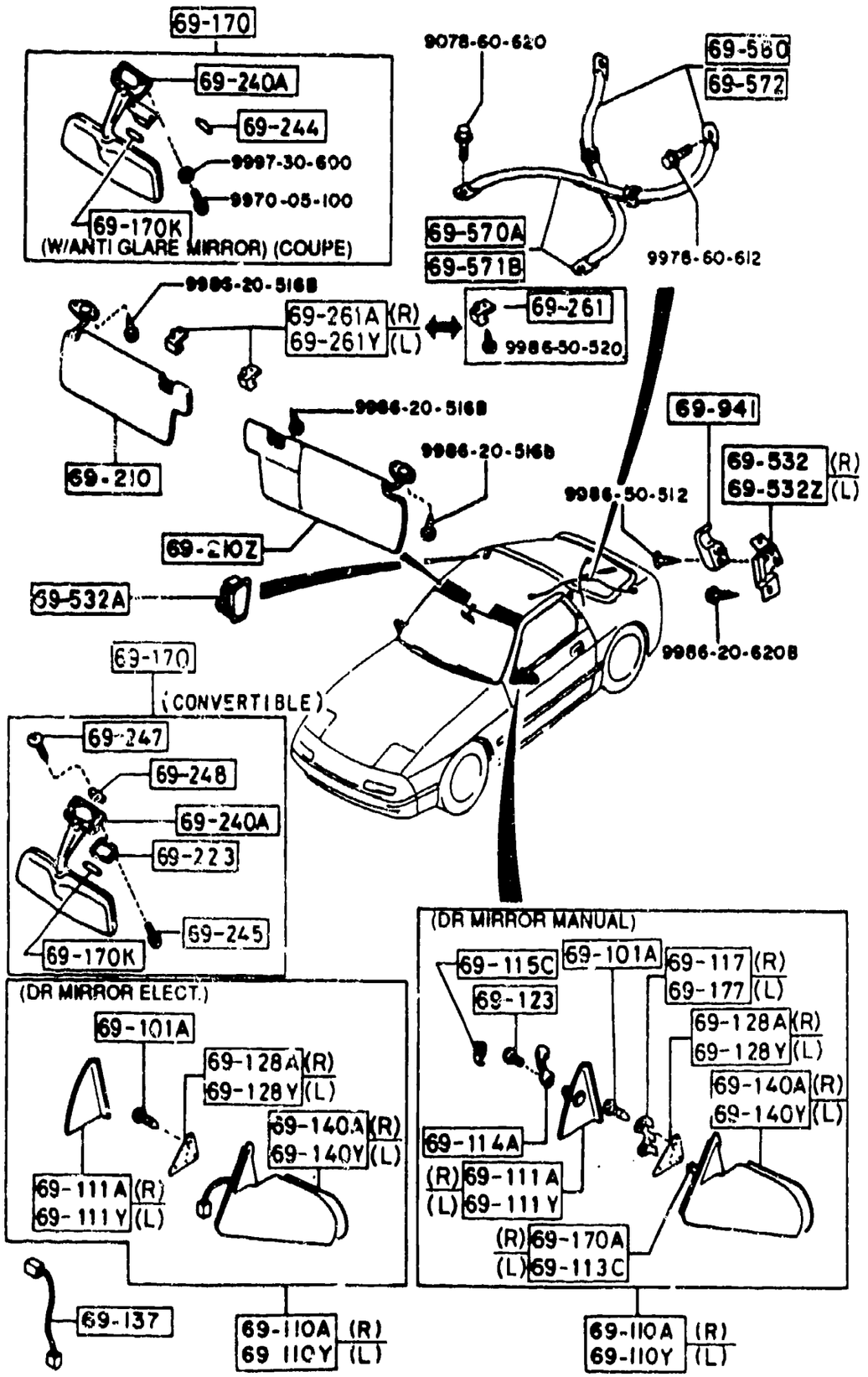

ITEM NO.	D-CODE	DESCRIPTION	PART NO	QTY	MODEL/DESCRIPTION	REMARKS
	69 110Y (CONT'D)		FB11-69-170C	1	GXL ELEC. DOOR MIRROR-BLACK	-6501
		<C>	FB11-69-170D	1	GXL ELEC. DOOR MIRROR-BLACK REQUIRES BRACKET: F044-69-184A	6501-
		MIRROR (L), DOOR	FB45-69-170	1	'87 TURBO ELEC. DOOR MIRROR-BODY COLOR REQ. BRACKET: F044-69-184A	-6501
		ARCTIC SILVER METALLIC	J5			
		TORNADO SILVER METALLIC	K8			
		PURE RED	NP			
		BRILLIANT BLACK	PZ			
		DOVER WHITE	WU			
		SATIN GOLD METALLIC	1A			
		ROYAL MAROON METALLIC	3A			
		SAPPHIRE BLUE METALLIC	5A			
		<C>	FB45-69-170A	1	'88 SPORT, GTU, TURBO, CONV. ELEC. DOOR MIRROR-BODY COLOR	6501-
		ARCTIC SILVER METALLIC	J5			
		TORNADO SILVER METALLIC	K8			
		BRILLIANT BLACK	PZ			
		SUNRISE RED	RH			
		CRYSTAL WHITE	UC			7701-
		NOBLE WHITE	WY			
		SATIN GOLD METALLIC	1A			
		CLARET METALLIC	2H			
		SAPPHIRE BLUE METALLIC	5A			
	69 111A	GARNISH (R), SAIL-INNER	F044-69-112A	1	BASE, SE, SPORT MANUAL DOOR MIRROR	
			F045-69-112A	1	'88 SPORT, GTU, GXL, CONV ELEC DOOR MIRROR	
	69 111Y	GARNISH (L), SAIL-INNER	F044-69-172A	1	BASE, SE, SPORT MANUAL DOOR MIRROR	
			F045-69-172A	1	'88 SPORT, GTU, GXL, CONV ELEC DOOR MIRROR	
	69 113C	LEVER, DOOR MIRROR	FB01-69-173	1	BASE SE, SPORT MANUAL DOOR MIRROR	

6501 FC33* -146093
7701 FC33* -550169

6900A-3 VISORS, ASSIST HANDLES & MIRRORS

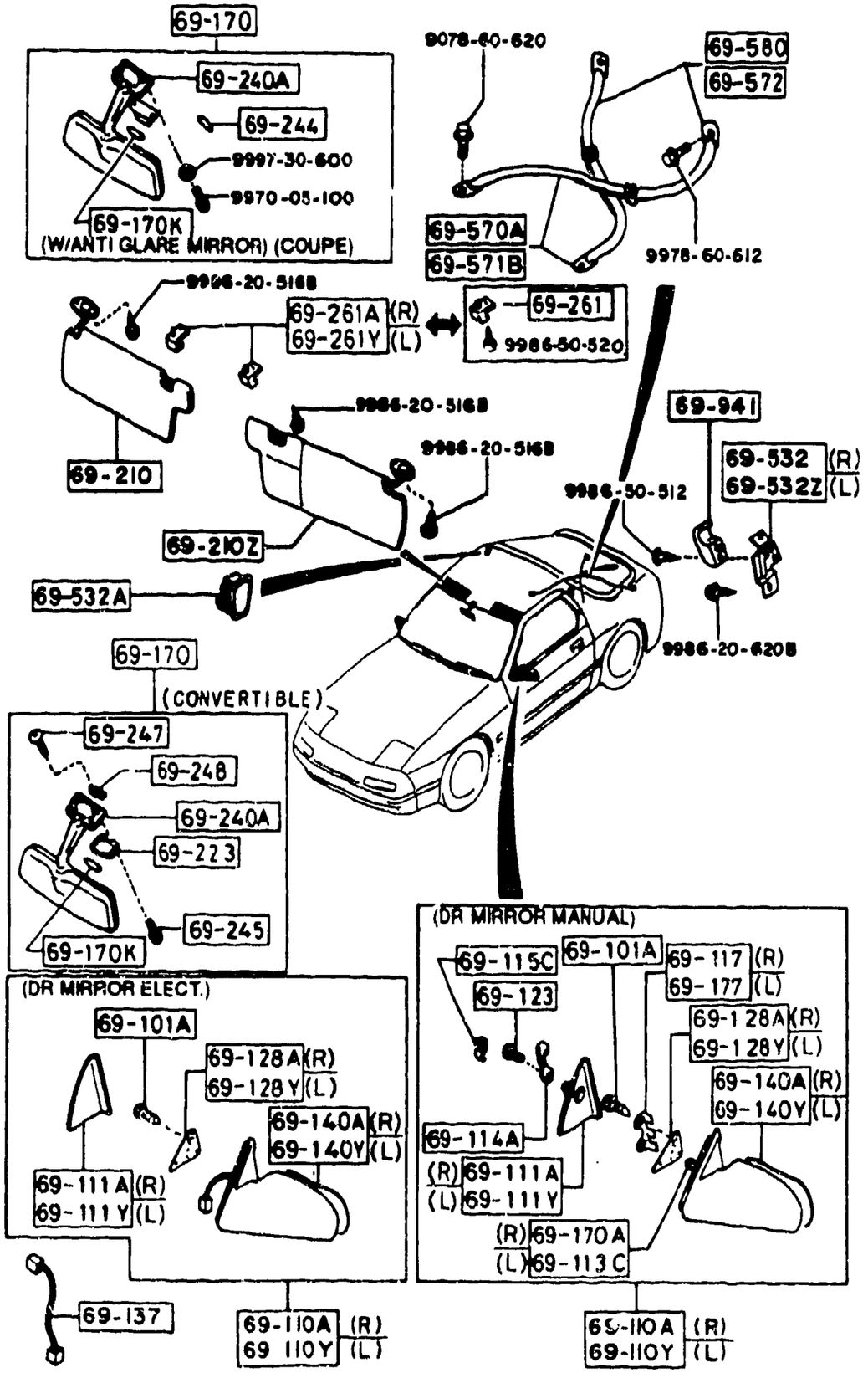

ITEM NO	D-CODE	DESCRIPTION	PART NO	QTY	MODEL/DESCRIPTION	REMARKS
	69 114A	KNOB 'A', DOOR MIRROR	B095-69-114	2	BASE, SE, SPORT MANUAL DOOR MIRROR	
	69 115C	KNOB 'B', DOOR MIRROR	B095-69-115	2	BASE, SE, SPORT MANUAL DOOR MIRROR	
	69 117	BRACKET (R), MIRROR	F044-69-124A	1	BASE, SE, SPORT MANUAL DOOR MIRROR	
	69 123	SCREW, MIRROR	HA50-69-119		BASE, SE, SPORT MANUAL DOOR MIRROR	
	69 128A	BOOT (R), DOOR MIRROR	FB01-69-128	1		
	69 128Y	BOOT (L), DOOR MIRROR	FB01-69-188	1		
	69 137	WIRE, REMOTE CONTROL MIRROR	F045-69-108A			
	69 140A	GLASS (R), MIRROR	FB01-69-123	1	'87 SPORT, BASE, SE, GXL MANUAL DOOR MIRROR ELEC. DOOR MIRROR-BLK	
			FB45-69-123	1	'88 SPORT, GTU, TURBO, CONV. ELEC. DOOR MIRROR-BODY COLOR	
	69 140Y	GLASS (L), MIRROR	FB01 69-183	1	'87 SPORT, BASE, SE, GXL MANUAL DOOR MIRROR ELEC. DOOR MIRROR-BLK	
			FB45-69-183	1	'88 SPORT, GTU, TURBO, CONV. ELEC. DOOR MIRROR-BODY COLOR	
69 170		MIRROR, INTERIOR	FB68-69-220B	1	CONV.	
		GRAY	07			
		BLUE	48			
			FB35-69-220D	1	COUPE	
		BLACK	00			
69 170A		STAY INTERIOR	FB01-69-113	1	BASE, SE, SPORT MANUAL DOOR MIRROR	
69 170K		BULB, INTERIOR MIRROR	0000-11-3175	1	12V, 10W	
69 177		BRACKET (L), MIRROR	F044-69-184A	1	BASE SE, SPORT MANUAL DOOR MIRROR	
69 210		SUN VISOR (R)	FB02-69-270A	1	W VANITY MIRROR, W O SUNROOF	
		DARK GRAY	07			
		RED	10			
		BLUE	48			
			FB03-69-270A	1	W SUNROOF	
		BLACK	02			
		DARK GRAY	07			
		RED	10			

6900A-4 VISORS, ASSIST HANDLES & MIRRORS

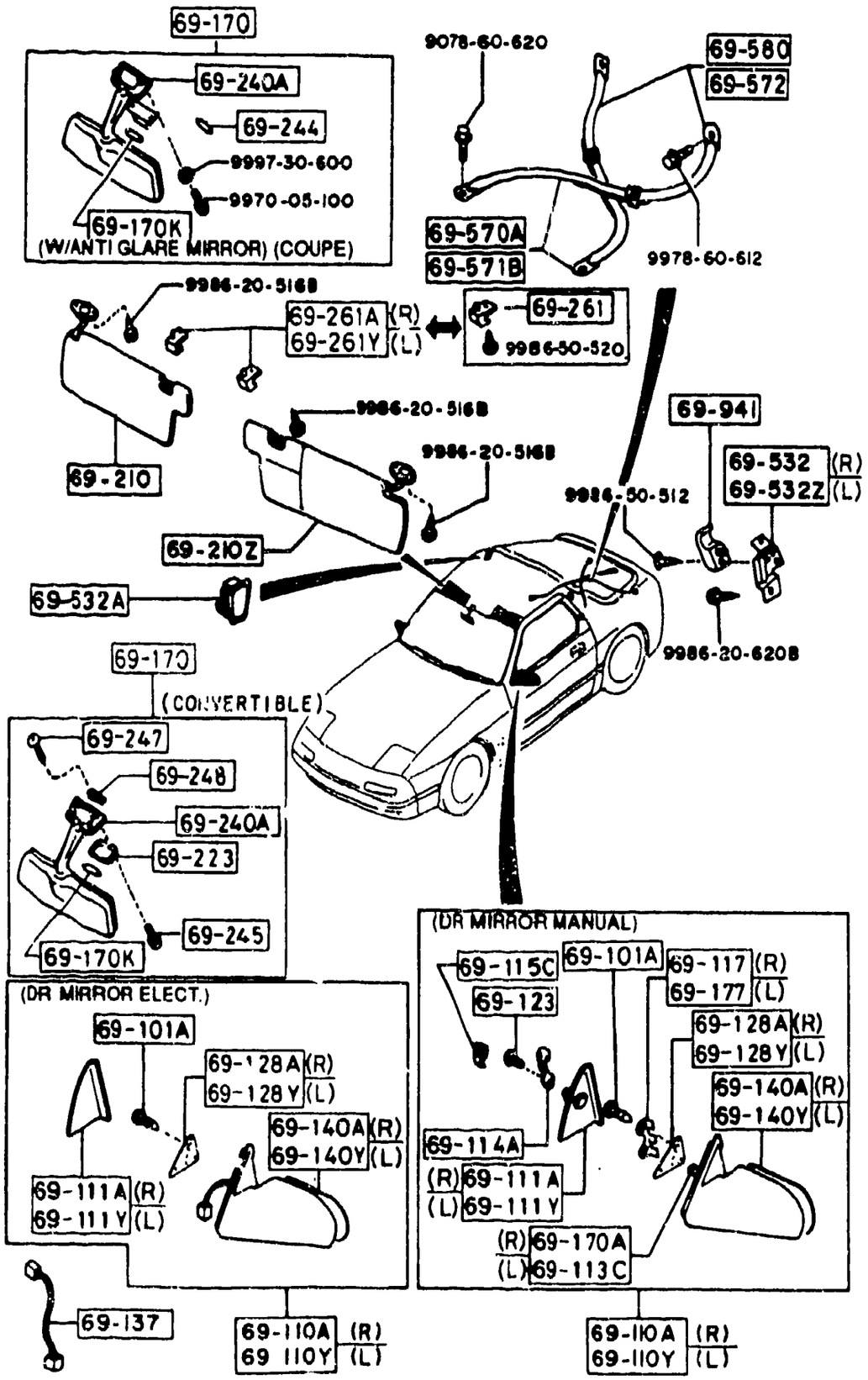

ITEM NO	D-CODE	DESCRIPTION	PART NO	QTY	MODEL/DESCRIPTION	REMARKS
	69 210 (CONT'D)	BLUE	48			
			FB67-69-270A	1	CONV.	
		DARK GRAY	07			
		BLUE	48			
	69 210Z	SUN VISOR (L)	FB34-69-320B	1	W/O SUNROOF	
		DARK GRAY	07			
		RED	10			
		BLUE	48			
			FB33-69-320B	1	W SUNROOF	
		BLACK	02			
		DARK GRAY	07			
		RED	10			
		BLUE	48			
			FB67-69-320A	1	CONV.	
		DARK GRAY	07			
		BLUE	48			
	69 223	LENS, INTERIOR LAMP	FB67-69-223	1	CONV.	
	69 240A	BASE, INTERIOR MIRROR	FB67-69-240	1	CONV.	
		DARK GRAY	07			
		BLUE	48			
			FB10-69-240	1	COUPE	7501
	69 244	PIN, INTERIOR MIRROR	FB10-69-244	1	COUPE	7501-
	69 245	SCREW, INTERIOR MIRROR	FB67-69-245	1	CONV.	
	69 247	HOLDER, PIN	FB67-69-247	1	CONV	
	69 248	SPRING, INTERIOR MIRROR	FB67-69-248	1	CONV.	
	69 261	ADAPTER, SUN VISOR	H260-69-261	2	CONV.	
		DARK GRAY	07			
		RED	10			
		BLUE	48			
	69 261A	ADAPTER (R), CENTER-SUN VISOR	FB01-69-261	1	W O SUNROOF	
		DARK GRAY	07			
		RED	10			
		BLUE	48			
			FB03-69-261	1	W SUNROOF	
		BLACK	02			
		DARK GRAY	07			
		RED	10			
		BLUE	48			
	69 261Y	ADAPTER (L), CENTER-SUN VISOR	FB01-69-262	1	W O SUNROOF	
		DARK GRAY	07			
		RED	10			

7501 FC33* -547831

6900A-5 VISORS, ASSIST HANDLES & MIRRORS

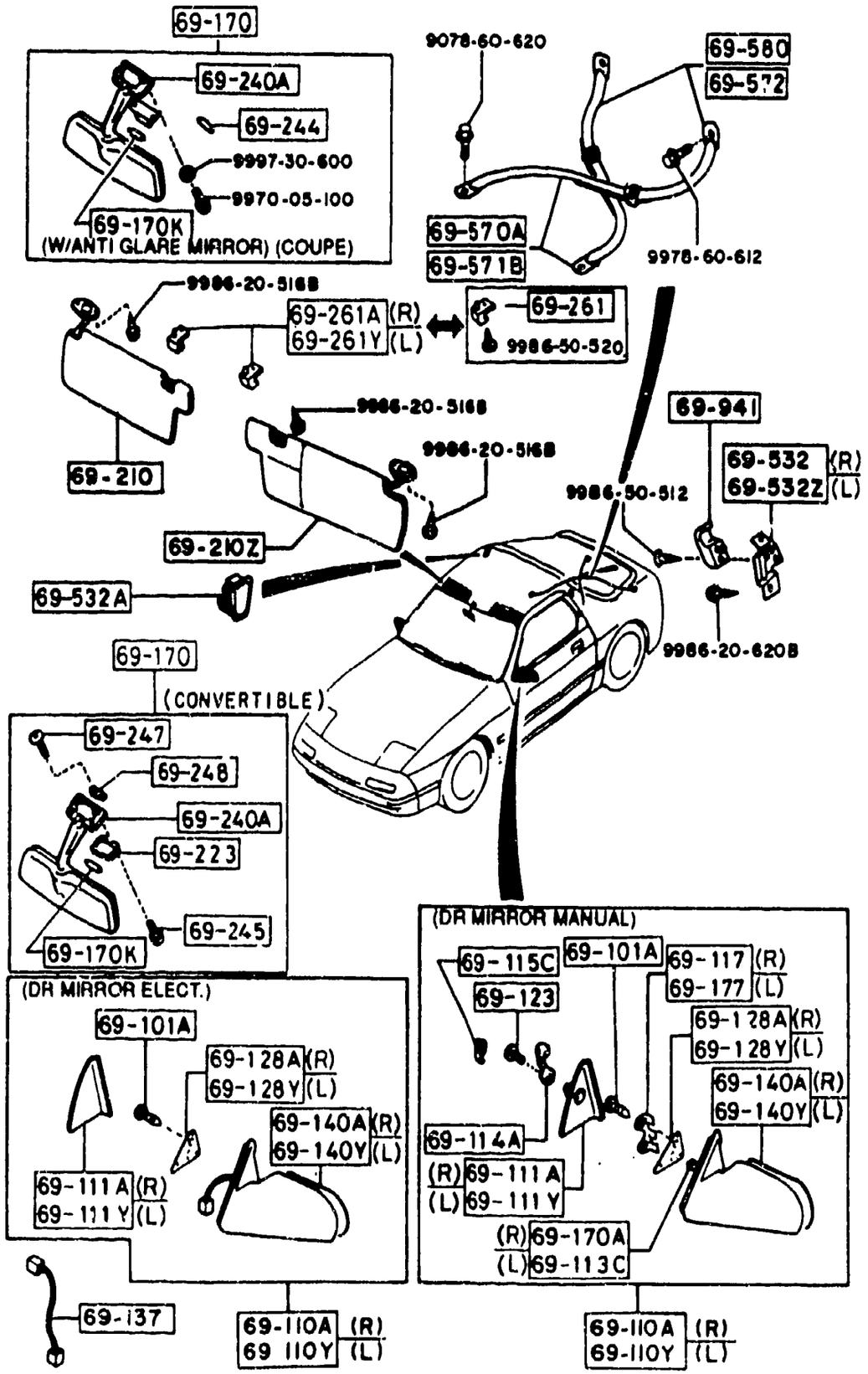

ITEM NO.	D-CODE	DESCRIPTION	PART NO.	QTY	MODEL/DESCRIPTION	REMARKS
	69 261Y (CONT'D)	BLUE	48			
			FB03-69-262	1	W. SUNROOF	
		BLACK	02			
		DARK GRAY	07			
		RED	10			
		BLUE	48			
	69 532	BRACKET (R), COAT HANGER	FB01-69-532	1	COUPE	
	69 532A	FASTENER, COAT HANGER	FB31-69-532	1	COUPE	
		BLACK	02			
		DARK GRAY	07			
		RED	10			
		BLUE	48			
	69 532Z	BRACKET (L), COAT HANGER	FB01-69-542	1	COUPE	
	69 570A	STRAP 'A', CARGO ROOM	FA54-69-571	2	COUPE	
		BLACK	00			
		DARK GRAY	07			
		RED	10			
		BLUE	48			
	69 571B	STRAP 'A', L/COMPARTMENT	FB67-69-571	2	CONV.	
	69 572	STRAP 'B', L/COMPARTMENT	FB67-69-572	2	CONV.	
	69 580	STRAP 'B', CARGO ROOM	FA54-69-572	2	COUPE	
		BLACK	00			
		DARK GRAY	07			
		RED	10			
		BLUE	48			
	69 941	HANGER, COAT	FB01-69-531	2		
		BLACK	02			
		DARK GRAY	07			
		RED	10			
		BLUE	48			

6930-1 CAUTION PLATES & LABELS

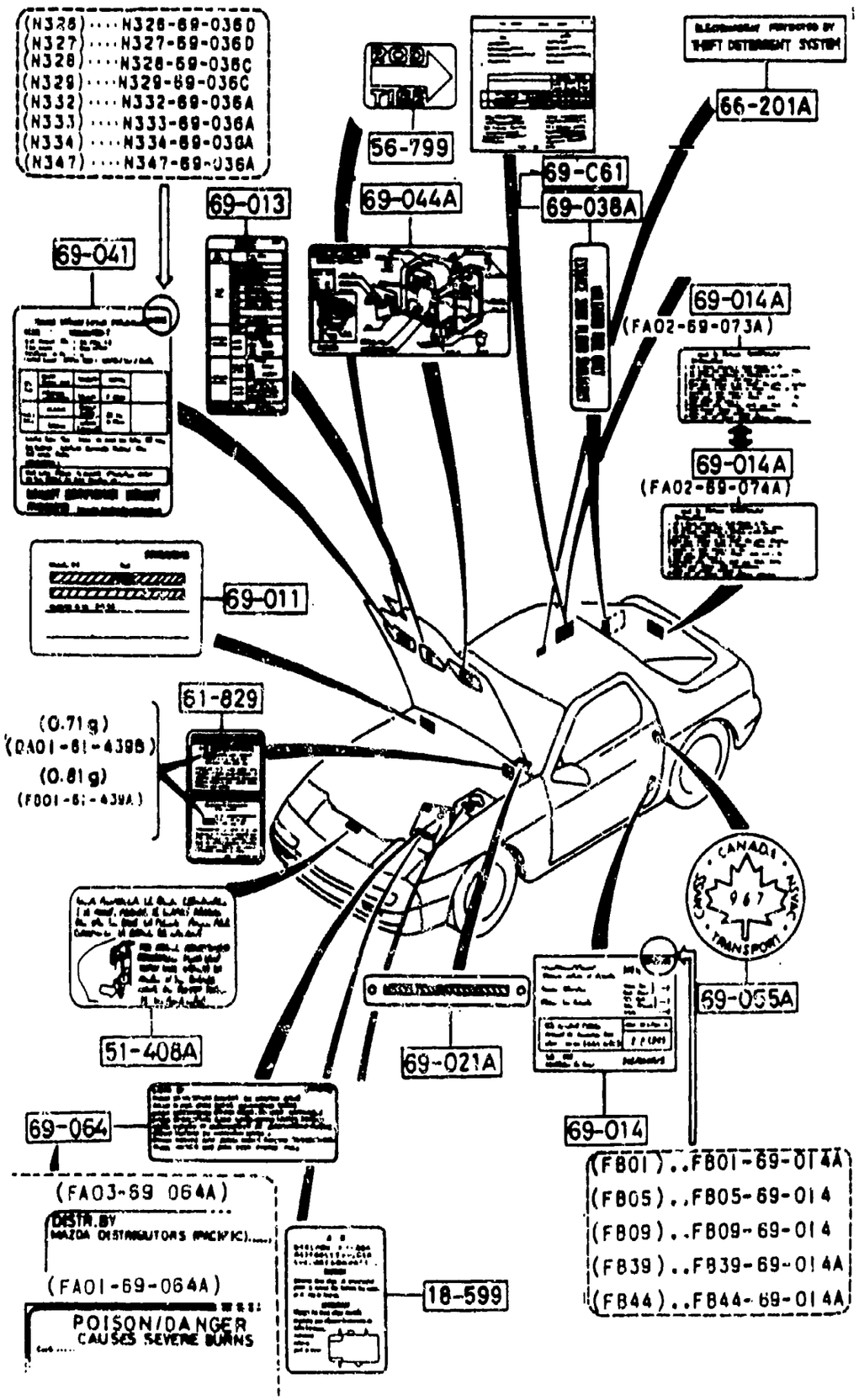

ITEM NO.	D-CODE	DESCRIPTION	PART NO.	QTY	MODEL/DESCRIPTION	REMARKS
	18 599	LABEL, CAUTION-BATTERY BOX	FB34-51-408	1		8101-
	51 408A	LABEL, CAUTION-RETRACTABLE	FB34-51-408	1		
	56 799	LABEL, HOOD STAY	UB39-56-799	1		
	61 829	LABEL, CAUTION	FB01-61-439B	1		7C01-
			DA01-61-439C	1		6625-6901
	66 201A	LABEL, BURGLAR ALARM	FB01-66-201	1		-7701
	69 011	PLATE, MODEL	B595-69-011B	1		
	69 013	LABEL, OIL	FB01-69-D21A	1	COUPE	
			FB67-69-013	1	CONV.	
	69 014	LABEL, TIRE	FB01-69-014A	1	2-SEATER 185/70 HR14, 135/70 R1487H	
			FB09-69-014	1	22 205 60 VR15	
			FB39-69-014A	1	22 185/70 HR14, 185/70 R1487H	
			FB44-69-014A	1	22 205 55 VR16	
			FB05-69-014A	1	205 60 VR15	
	69 014A	LABEL, TEMPORARY TIRE	FA02-69-073A	1		
	69 021A	PLATE, CAUTION	GA02-69-068	1		
	69 038A	LABEL, GASOLINE	UB40-69-065	1		
	69 041	LABEL, EMISSION	N326-69-036A	1	FED., W/O TURBO	-6701
			N326-69-036B	1	FED., W/O TURBO	6701-7701
			N326-69-036C	1	FED., W/O TURBO	7701-8122
			N326-69-036D	1	FED., W/O TURBO	8122-
			N327-69-036A	1	CAL., W/O TURBO	-6701
			N327-69-036B	1	CAL., W/O TURBO	6701-7701
			N327-69-036C	1	CAL., W/O TURBO	7701-8122
			N327-69-036D	1	CAL., W/O TURBO	8122-
			N332-69-036	1	FED., TURBO	-7701
			N332-69-036A	1	FED, TURBO	7701-
			N334-69-036	1	CAL, TURBO	-7701
			N334-69-036A		CAL, TURBO	7701-
	69 044A	LABEL, VACUUM DIAPHRAGM	N326-69-044	1	CAL	-6701
			N326-69-044A	1	CAL	6701-7701
			N326-69-044B	1	CAL	7701-
			N332 69-044	1	CAL	-7701
			N332-69-044A	1	CAL	7701-
	69 055A	LABEL, SAFETY PANEL	FA11-69-066A	1		-8901
			FA11-69-C31	1		8901-
	69 064	LABEL, BATTERY	FA01-69-064	1		-7A01

6625	FC33* -157816	8101	FC33* -619238		
6701	FC33* -500010		FC351 -102445		
6901	FC33* -512255	8122	FC33* -619729		
7701	FC33* -550169		FC351 -102623		
7A01	FC33* -612356	8901	FC33* -628938		
	FC351 -100963		FC351 107782		
7C01	FC33* -617286				
	FC351 -101890				

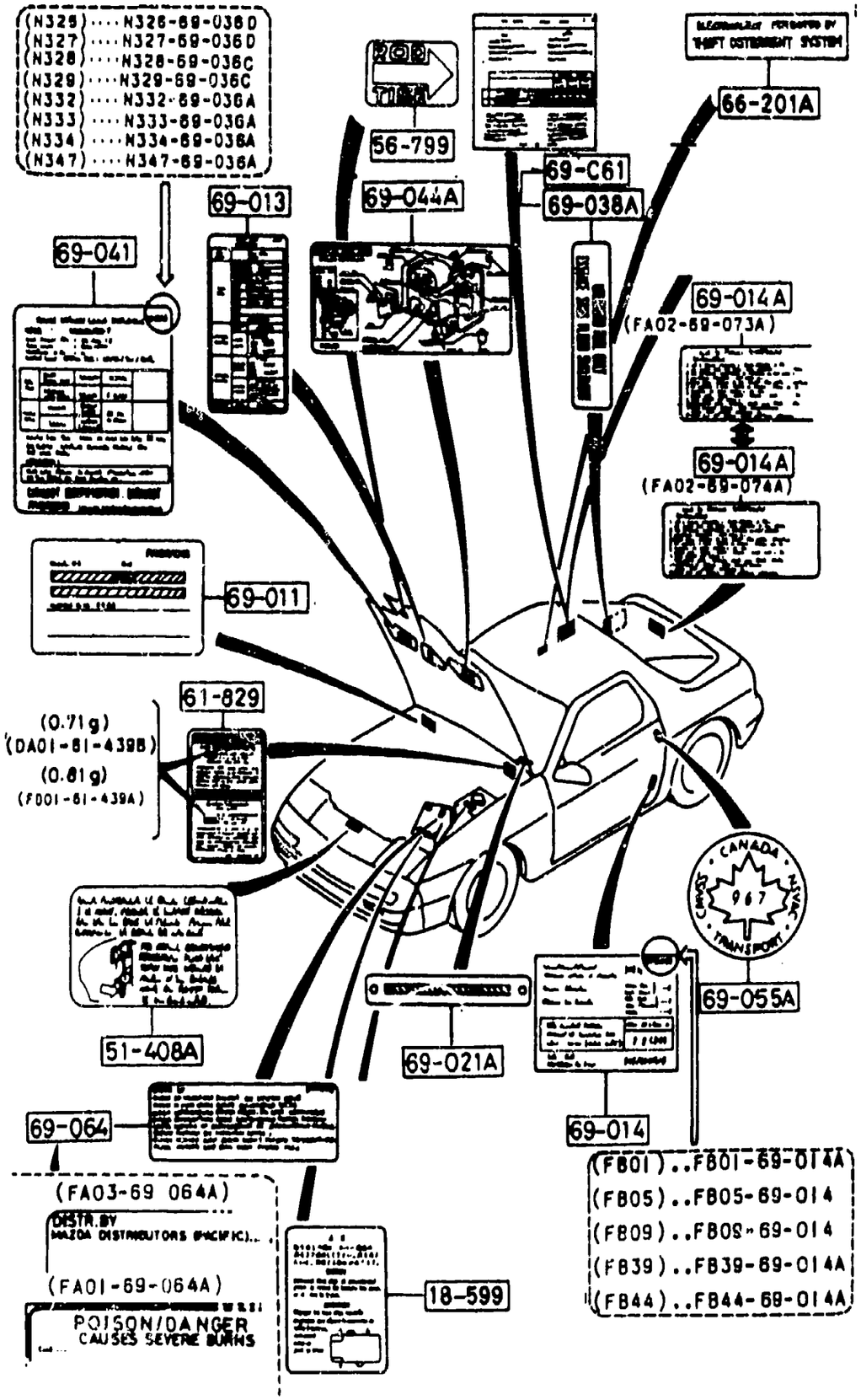

ITEM NO.	D-CODE	DESCRIPTION	PART NO.	QTY	MODEL/DESCRIPTION	REMARKS
	69 064 (CONT'D)		FA01-69-064A	1		7A01-
			FA03-69-064A	1		-8A01
			FA01-69-064A	1		8A01-
	69 C61	LABEL, UNLEADED FUEL	UB40-69-C61	1		8901-

7A01	FC33*	-612356
	FC351	-100963
8901	FC33*	-628938
	FC351	-107782
8A01	FC33*	-630636
	FC351	-108247

7250-1 QUARTER WINDOW & TRIMS

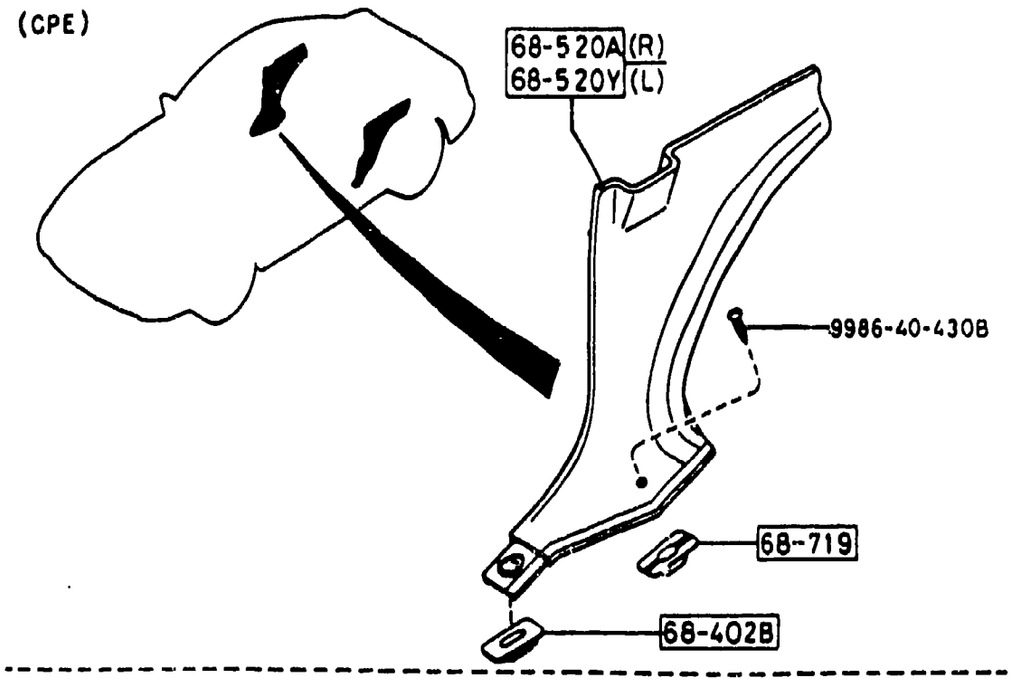

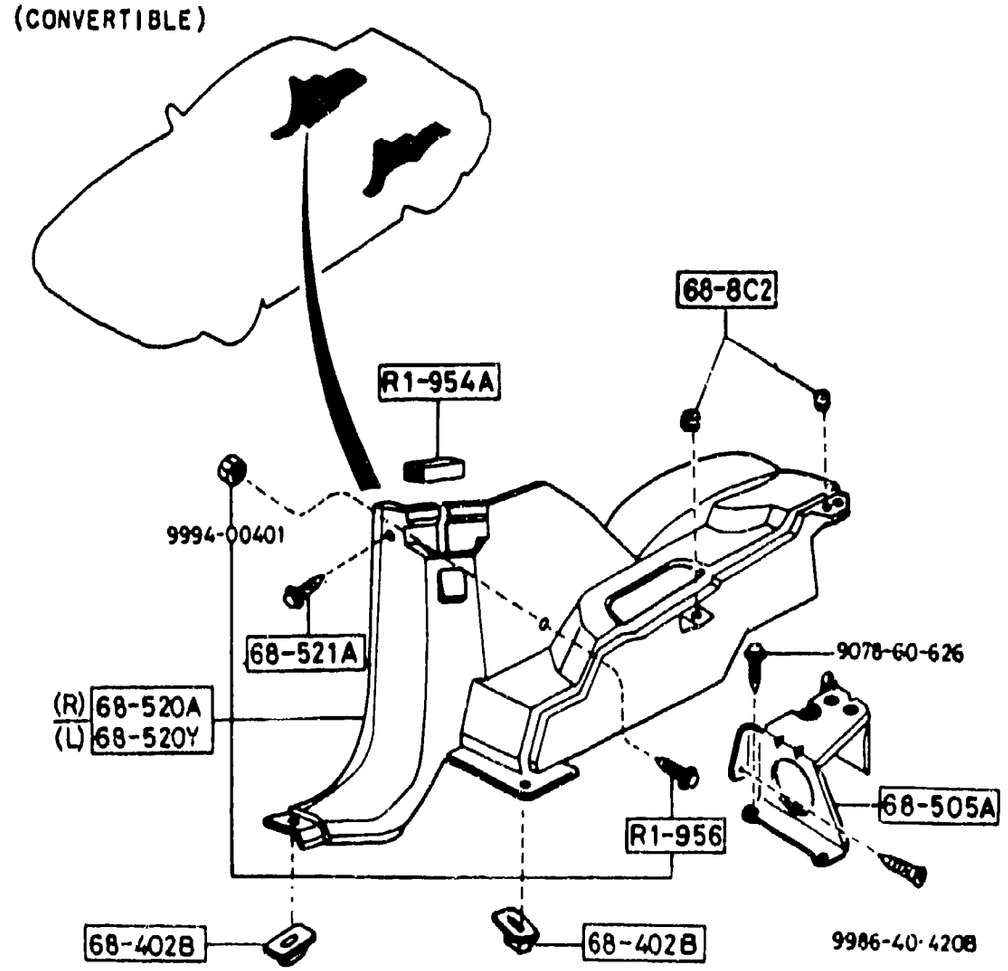

ITEM NO.	D-CODE	DESCRIPTION	PART NO	QTY	MODEL/DESCRIPTION	REMARKS
	68 402B	GROMMET, SCREW	FA54-68-719B	8	CONV.	
				4	COUPE	
	68 505A	BRACKET, QUARTER TRIM	FB67-68-505B	1	CONV	
	68 520A	TRIM (R), QUARTER	FB01-68-520A	1	COUPE	
		DARK GRAY	07			
		RED	10			
		BLUE	48			
			FB67-68-520E	1	CONV.	
		DARK GRAY/GRAY	07			
		BLUE	48			
	68 520Y	TRIM (L), QUARTER	FB01-68-550A	1	COUPE	
		DARK GRAY	07			
		RED	10			
		BLUE	48			
			FB67-68-550E	1	CONV.	
		DARK GRAY/GRAY	07			
		BLUE	48			
	68 521A	CLIP, QUARTER TRIM	FB67-68-523	2	CONV	
	68 719	GROMMET, SCREW	FB01-68-719	2	COUPE	
	68 8C2	NUT, EXPANSION	FB67-68-8C2	4	CONV	
	R1 954A	HOOK, SCREW-QTR. TRIM	FB67-R1-954	2	CONV.	
	R1 956	HOOK, SCREW-QTR. TRIM	FB67-R1-956A	2	CONV.	

7800-1 SPOILERS & RELATED PARTS

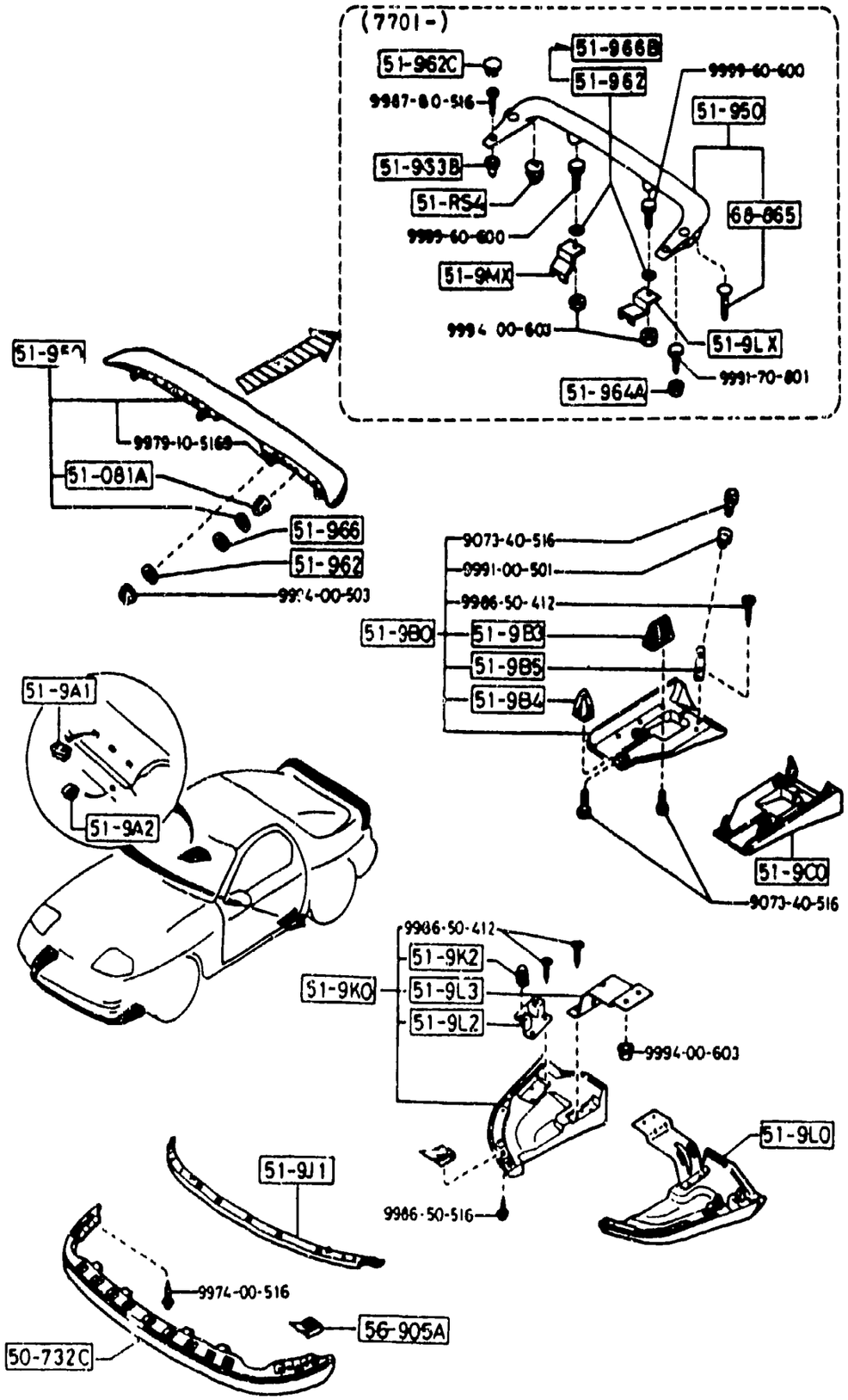

ITEM NO.	D-CODE	DESCRIPTION	PART NO	QTY	MODEL/DESCRIPTION	REMARKS
	50 732C	SKIRT, FRONT AIR DAM	FB01-50-732	1		
	51 081A	FASTENER	FB01-51-163A	2		-5B01
	51 950	SPOILER, REAR	FB01-51-960A	1	COUPE	-7701
			FB03-51-960	1	COUPE	7701-
		ARCTIC SILVER METALLIC	J5			
		BRILLIANT BLACK	PZ			
		SUNRISE RED	RH			
		NOBLE WHITE	WY			
	51 962	GROMMET, SCREW	FB01-51-962	6	COUPE	-5B01
				4	COUPE	5B01-
	51 962C	CAP, REAR SPOILER	FB03-51-962	2	COUPE	7701-
		ARCTIC SILVER METALLIC	J5			
		BRILLIANT BLACK	PZ			
		SUNRISE RED	RH			
		NOBLE WHITE	WY			
	51 963B	GROMMET, SCREW-REAR SPOILER	FB02-51-963	2	COUPE	7701-
	51 964A	NUT, CAP-REAR SPOILER	FB02-51-964	2	COUPE	7701-
	51 966	PROTECTOR	FB01-51-966	4	COUPE	-7701
			FB01-51-966b	4	COUPE	7701-
	51 9A1	PLUG 'A', BLIND-SIDE SPOILER	FB03-51-9A1	6	W/O AERO PARTS COUPE	
	51 9A2	PLUG 'B', BLIND-SIDE SPOILER	FB03-51-9A2	2	W/O AERO PARTS COUPE	
	51 9B0	SPOILER (R), SIDE	FB01-51-9B0A	1	COUPE	
	51 9B3	GROMMET, SCREW-SIDE SPOILER 'C'	FB01-51-9B3	6	COUPE	
	51 9B4	GROMMET, SCREW-SIDE SPOILER 'A'	FB01-51-9B4	2	COUPE	
	51 9B5	GROMMET, SCREW-SIDE SPOILER 'B'	FB01-51-9B5	2	COUPE	
	51 9C0	SPOILER (L), SIDE	FB01-51-9C0A	1	COUPE	
	51 9J1	DAM (C), AIR-SKIRT	FB01-51-9J1A	1	COUPE	
	51 9K0	SKIRT (R), FRONT AIR DAM	FB01-51-9K0A	1	COUPE	
	51 9K2	FASTENER, AIR DAM-SKIRT	FB01-51-9K2	4	COUPE	
	51 9L0	SKIRT (L), FRONT AIR DAM	FB01-51-9L0A	1	COUPE	
	51 9L2	BRACKET 'A', AIR DAM	FB01-51-9L2	2	COUPE	
	51 9L3	BRACKET 'B', AIR DAM	FB01-51-9L3	2	COUPE	
	51 9LX	STIFFENER (L), REAR SPOILER	FB02-51-9LXB	1	COUPE	7701-
	51 9MX	STIFFENER (R), REAR SPOILER	FB02-51-9MXB	1	COUPE	7701
	51 RS4	CLIP, REAR SPOILER	KA10-51-RS4	4	COUPE	7701-
	56 905A	NUT, SPRING	W023-60-122	4		
	68 865	FASTENER	G045-68-865	2	COUPE	7701-
		BLACK	00			

5B01 FC33* -113629
7701 FC33* -550169

7900-1 ACCESSORIES-CONSOLE LID

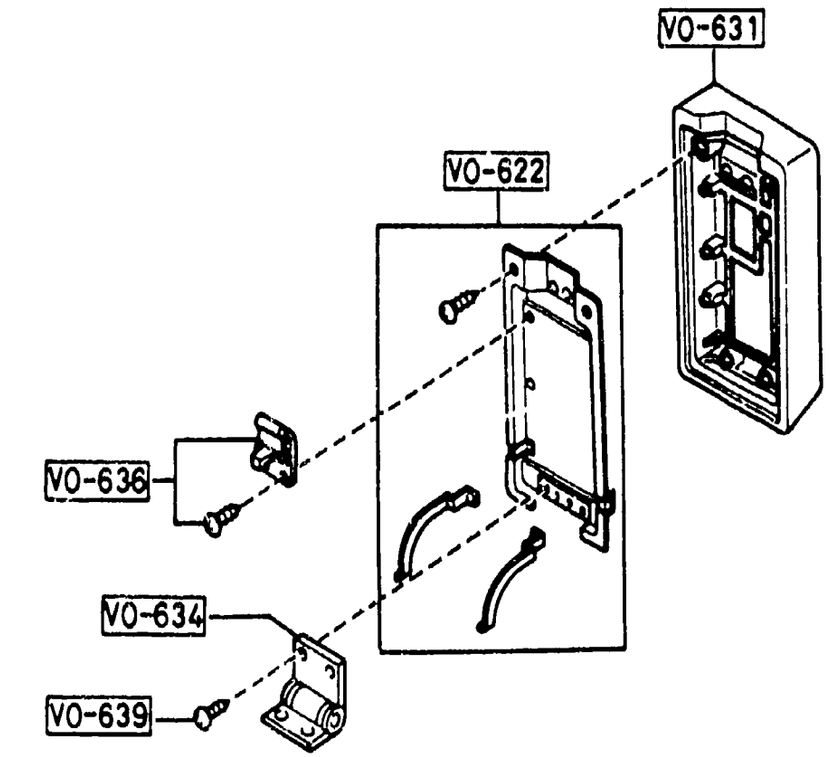

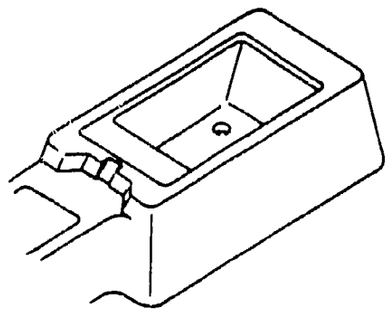

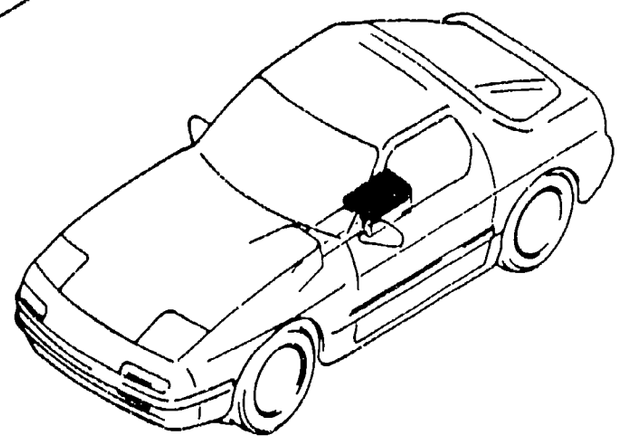

ITEM NO.	D-CODE	DESCRIPTION	PART NO	QTY	MODEL/DESCRIPTION	REMARKS
	V0 622	LID, INNER	FB01-V0-622	1		
	V0 631	LID, OUTER	FB01-V0 631	1		
		RED	1F			
		BLUE	5F			
		GRAY	7F			
	V0 634	HINGE	FB01-V0-634	1		
		RED	1F			
		BLUE	5F			
		GRAY	7F			
	V0 636	PLATE, LOCK	FB01-V0-636	1		
	V0 639	SCREW	FB01-V0-639	1		

ALPHABETICAL INDEX

ALPHABETICAL INDEX

PART NAME	D-CODE	SECTION	LOCATION
• • • A • • •			
A C C SET	99063	6640 -1	2 - H16
ACCESSORY KIT		6142A -1	2 - I14
ACTUATOR	34080	3400A -1	1 - N13
ACTUATOR (R). POWER LOCK	58350A	5830A -1	2 - C12
ACTUATOR. A C C	66310B	6640 -1	2 - H16
ACTUATOR. A P V	131701	1380B -3	1 - I 5
ACTUATOR. EXHAUST VALVE	1370Y	1310BA-2	1 - E 4
ACTUATOR. MODE-HEATER UNIT	61370	6110 -1	2 - C14
ACTUATOR REAR DAMPER	34080A	2800A -1	1 - C12
ACTUATOR. RECYCLE & FRESH	61860	6120 -1	2 - E14
ACTUATOR. SHUTTER VALVE	20130	1364BA-1	1 - D 5
ACTUATOR. TEMPERATURE	61415	6110 -1	2 - C14
ADAPTER (L). CENTER-SUN VISOR	69261Y	6900A -4	3 - F 7
ADAPTER (R). CENTER-SUN VISOR	69261A	6900A -4	3 - F 7
ADAPTER. SUN VISOR	69261	6900A -4	3 - F 7
ADAPTER. TOOLING-FRAME	56311A	5320 -1	2 - C 5
ADJUSTER	68154A	6820A -1	3 - D 5
ADJUSTER NO 3	88152	5700AC-4	2 - I10
ADJUSTER NO 4	88153	5700AC-4	2 - I10
ADJUSTER GLASS-FRONT DOOR	58606D	5800A -1	2 - J11
ADJUSTER. NO 1	88102	5700AA-9	2 - K 9
	88102	5700AC-3	2 - H10
	88102	5700A -4	2 - F 8
	88102	5700AB-2	2 - D10
ADJUSTER. NO 2	88103	5700AC-3	2 - H10
	88103	5700AA-9	2 - K 9
	88103	5700A -4	2 - F 8
	88103	5700AB-2	2 - D10
ADJUSTER NO 3	88152	5700AA-11	2 - M 9
	88152	5700A -6	2 - H 8
	88152	5700AB-3	2 - E10
ADJUSTER. NO 4	88153	5700AA-11	2 - M 9
	88153	5700AB-3	2 - E10
	88153	5700A -6	2 - H 8
ALTERNATOR	18300	1830BA-1	1 - G 8
	18300	1830B -1	1 - F 8
AMP. AE SYSTEM-AUDIO	66920C	6680 -3	2 - K16
AMPLIFIER. POWER-AUDIO	66920B	6680 -3	2 - K16
ANTENNA. MOTOR-RADIO	66930C	6682 -2	3 - D 3
ARM (L). LOWER	28300Z	2830 -1	1 - F12
	34310Z	3400 -1	1 - M13
	34310Z	3400A -1	1 - N13
	34310Z	3400B -1	1 - C14
ARM (L). LOWER-LID HINGE	51514Z	5103 -1	2 - L 3
ARM (L). UPPER-LID HINGE	51515Z	5103 -1	2 - L 3
ARM (R) LOWER	28300	2830 -1	1 - F12
	34310	3400 -1	1 - M13
	34310	3400B -1	1 - C14
	34310	3400A -1	1 - N13
ARM (R). LOWER-LID HINGE	51514	5103 -1	2 - L 3
ARM (R). UPPER-LID HINGE	51515	5103 -1	2 - L 3
ARM NO 1. LINK	76657	6730 -1	3 - I 4
ARM NO 2. LINK	76659A	6730 -1	3 - I 4
ARM WIPER	67321	6730 -1	3 - I 4
	67421A	6750 -1	3 - K 4
ARMATURE	24720	1840B -1	1 - H 8
	24720	1840BA-1	1 - I 8
ATTACHMENT PAD-FRONT	49290B	3300 -4	1 - H13
	49290B	3300A -2	1 - J13
	49290B	3300B -2	1 - L13
ATTACHMENT PAD-REAR	49290A	2610 -2	1 - G11
AUDIO SET	66870J	6680 -3	2 - K16

PART NAME	D-CODE	SECTION	LOCATION
• • • B • • •			
BACK (L). FRONT SEAT	88180	5700AC-4	2 - I10
	88180	5700AB-3	2 - E10
	88180	5700AA-12	2 - N 9
	88180	5700A -7	2 - I 8
BACK (R). FRONT SEAT	88130	5700AC-3	2 - H10
	88130	5700AA-10	2 - L 9
	88130	5700AB-2	2 - D10
	88130	5700A -5	2 - G 8
BACK. REAR SEAT	57250	5750AA-3	2 - E11
	57250	5750A -2	2 - K10
BAG. ROOF PANEL	68095	6800AB-1	3 - N 4
BAG. TOOL	68670	6870 -1	3 - J 6
BALL	19245	1910 -1	1 - K 8
BALL JOINT. LOWER	34550	3400B -1	1 - C14
	34550	3400A -1	1 - N13
	34550	3400 -1	1 - M13
BALL. PILLOW-REAR LOWER ARM	26230	2830 -1	1 - F12
BALL. STEEL	17341J	4140B -1	1 - E15
	24744A	1840BA-1	1 - I 8
	24744A	1840B -1	1 - H 8
BAND	69987	5830A -5	2 - G12
BAND (L). TANK FIXTURE	42420A	4200 -1	1 - G15
BAND (R). TANK FIXTURE	42410C	4200 -1	1 - G15
BAND SET. STEERING GEAR	32188B	3220 -1	1 - K12
BAND. BATTERY	18522	1850B -1	1 - J 8
BAND. BRAKE	19360	1930 -1	1 - E 9
BAND. CORD-OXYGEN SENSOR	18868	6600BA-2	2 - K15
BAND. RELAY SOUND PREVENT	67744A	6630 -1	2 - F16
BAR (FRT.). FORMING-SOFT TOP	R101Y	6330A -1	2 - E15
BAR (RR). FORMING-SOFT TOP	R1110A	6330A -1	2 - E15
BASE. INTERIOR MIRROR	69240A	6900A -4	3 - F 7
BATTERY	18520	1850B -1	1 - J 8
BEAM. SEALED	84851A	5100 -1	2 - K 3
BEARING		6142A -1	2 - I14
	15940J	1580B -1	1 - K 6
	17298	1710 -1	1 - D 7
	26205	2610 -1	1 - F11
	27305	2710C -1	1 - L11
	27305	2710A -1	1 - J11
	27305	2710 -1	1 - H11
	32115	3220A -1	1 - L12
	32147A	3220A -1	1 - L12
BEARING. BALL	17221J	1710 -1	1 - D 7
	17301J	1710A -2	1 - H 7
	17303	1710A -2	1 - H 7
	17306	1710 -2	1 - E 7
BEARING. BALL-ALTERNATOR FRONT	24514	1830B -1	1 - F 8
	24514	1830BA-1	1 - G 8
BEARING. BALL-ALTERNATOR REAR	24503	1830BA-1	1 - G 8
	24503	1830B -1	1 - F 8
BEARING. BALL-COUNTER SHAFT GEAR	17297	1710 -1	1 - D 7
	17297A	1710 -1	1 - D 7
BEARING. BALL-DRIVE PINION	27143A	2710 -1	1 - H11
	27143A	2710C -1	1 - L11
	27143A	2710A -1	1 - J11
BEARING. BALL-MAIN DRIVE GEAR	17201J	1710 -1	1 - D 7
	17201J	1710A -1	1 - G 7
BEARING. BALL-MAIN SHAFT	17204	1710A -1	1 - G 7
	17204	1710 -1	1 - D 7
BEARING MAIN	10502A	1030B -1	1 - F 3
	10502A	1030BA-1	1 - F 3
BEARING NEEDLE	114031	1100BA-1	1 - J 3
	114031	1100B -1	1 - I 3
	115051	1100BA-1	1 - J 3

PART NAME	D-CODE	SECTION	LOCATION
	115051	1100B -1	1 - I 3
	17203	1710 -1	1 - D 7
	17205B	1710A -1	1 - G 7
	17274	1710 -1	1 - D 7
	17274	1710A -1	1 - G 7
	17612	1710A -2	1 - H 7
	19621	1930 -2	1 - F 9
	19622	1930 -2	1 - F 9
	19622	1940 -1	1 - H 9
	19623	1930 -2	1 - F 9
	19624	1930 -2	1 - F 9
BEARING. PINION	27141	2710A -1	1 - J11
	27141	2710 -1	1 - H11
	27141A	2710 -1	1 - H11
	27141A	2710C -1	1 - L11
	27141A	2710A -1	1 - J11
BEARING REAR AXLE	26151	2600 -1	1 - E11
BEARING. ROLLER	17205	1710 -1	1 - D 7
	17205	1710A -1	1 - G 7
BEARING. ROTOR	111111	1110BA-1	1 - L 3
	111111	1110B -1	1 - K 3
BELT		6142A -1	2 - I14
BELT 'A' (L). FRONT SEAT	57920A	5790A -1	2 - H11
BELT 'A' (R). FRONT SEAT	57900A	5790A -1	2 - H11
BELT 'A'. REAR SEAT	88941	5790A -2	2 - I11
BELT 'B' (L). FRONT SEAT	57680A	5790A -1	2 - H11
BELT 'B' (R). FRONT SEAT	57630A	5790A -1	2 - H11
BELT. REAR SEAT	78200	5790A -1	2 - H11
BEZEL (L). HEAD LAMP-LOWER	51632A	5103 -1	2 - L 3
BEZEL (L) HEAD LAMP-UPPER	51631	5103 -1	2 - L 3
BEZEL (R). HEAD LAMP-LOWER	51622A	5103 -1	2 - L 3
BEZEL (R). HEAD LAMP-UPPER	51621A	5103 -1	2 - L 3
BEZEL. AUTO CLOCK	55720	5500 -1	2 - G 6
	55720	5500A -1	2 - I 6
	55720	5500B -1	2 - J 6
BLADE. WIPER-FRONT	67330	6730 -1	3 - I 4
BLADE. WIPER-REAR	67330A	6750 -1	3 - K 4
BLOCK. FUSE	66730	6700A -1	3 - H 3
	66730	6700 -1	3 - G 3
	66730	6700B -1	3 - I 3
BLOCK. MAIN FUSE	66760	6701A -1	3 - K 3
	66760	6701B -1	3 - L 3
	66760	6701 -1	3 - J 3
BLOCKER. WIND	68845	6860AB-1	3 - E 6
BLOWER UNIT	61140	6100 -1	2 - N13
BOARD. PARTITION	68811	6840AB-1	3 - E 6
BODY 'A'. LAMP-CARGO ROOM	51441A	5125 -1	2 - F 4
BODY 'B'. LAMP-CARGO ROOM	51440B	5125 -1	2 - F 4
BODY (L). FRONT DOOR	58010Z	5800AA-1	2 - K11
	58010Z	5800A -1	2 - J11
BODY (R). FRONT DOOR	58010	5800AA-1	2 - K11
	58010	5800A -1	2 - J11
BODY. CONTROL VALVE-UPPER	19760	1925 -1	1 - C 9
BODY. FILLER CAP	15175B	1500B -1	1 - G 6
	15175B	1500BA-1	1 - I 6
BODY OIL FILTER	14310A	1400B -1	1 - E 6
	14310A	1400BA-1	1 - E 6
BODY THROTTLE	13650E	1380B -3	1 - I 5
	13650E	1380BA-3	1 - M 5
BODY VALVE-LOWER	19811	1925 -1	1 - C 9
BOLT		6132A -1	2 - G14
		6132A -1	2 - G14
		6132A -1	2 - G14
		6142A -1	2 - I14
		6142A -1	2 - I14
		6152A -1	2 - J14

ALPHABETICAL INDEX

PART NAME	D-CODE	SECTION	LOCATION
BOLT	108451	1040BA-1	1 - H 3
	108451	1040B -1	1 - G 3
	13461C	1310BA-2	1 - E 4
	15226	1500BA-2	1 - J 6
	15226	1500B -2	1 - H 6
	16432	1600 -1	1 - L 6
	17337	1600A -1	1 - M 6
	17337	1700A -1	1 - C 7
	17337A	1700A -1	1 - C 7
	17338	1700A -1	1 - C 7
	189121	1364B -1	1 C 5
	189121	1364BA-1	1 - D 5
	19064	1910 -1	1 - K 8
	19216	1910 -1	1 - K 8
	19255	1910 -1	1 - K 8
	19338	1920 -1	1 - L 8
	19397	1920 -1	1 - L 8
	19397A	1940 -1	1 - H 9
	19398	1920 -1	1 - L 8
	19706	1950 -1	1 - I 9
	19737	1920 -2	1 - M 8
	19818	1925 -1	1 - C 9
	19838B	1950 -1	1 - I 9
	21255	1920 -2	1 - M 8
	24729	1840BA 1	1 - I 8
	24729	1840B -1	1 - H 8
	25123	2500 -1	1 - C11
	26133	2600 -1	1 - E11
	26680	2610 -1	1 - F11
	32020C	3210A -1	1 - J12
	32020C	3210 -1	1 - I12
	32084	3210 -1	1 - I12
	32084	3210A -1	1 - J12
	32169A	3210A -1	1 - J12
	32169A	3210 -1	1 - I12
	32614A	3240 -2	1 - D13
	34098	3400B -1	1 - C14
	34098	3400A -1	1 - N13
	34098	3400 -1	1 - M13
	34099	3400 -1	1 - M13
	34099	3400A -1	1 - N13
	34099	3400B -1	1 - C14
	39035A	3900B -1	1 - J14
	39035A	3900BA-1	1 - K14
	39055	3400A -1	1 N13
	39055	3400 -1	1 - M13
	46016	4600 -1	1 - I16
	50015C	5000 -1	2 - E 3
	64903E	5560 -2	2 - G 7
	78036A	5000 -1	2 - E 3
	88052	5700AA-9	2 - K 9
	88054	5700A -3	2 - E 8
	88734	5700AC-4	2 - I10
	88734	5700A -8	2 - J 8
	88734	5700AB-3	2 - E10
	88734	5700AA-12	2 - N 9
BOLT 'B', LINK	28314	2800B -1	1 - D12
	28314	2800A -1	1 - C12
	28314	2800 -1	1 - N11
BOLT SET	17323	1710A -2	1 - H 7
BOLT, ADJUST	15966	1580B -1	1 - K 6
	28370	2830 -1	1 - F12
BOLT ADJUSTER-FRT SEAT	88833	5700AA-12	2 - N 9
	88833	5700AC-4	2 - I10
	88833	5700A -9	2 - K 8
BOLT ADJUSTING		6142A -1	2 - I14

PART NAME	D-CODE	SECTION	LOCATION
BOLT, ALTERNATOR	18380	1800B -2	1 - M 7
	18380	1800BA-2	1 - D 8
BOLT, ANCHOR END	19341	1920 -1	1 - L 8
BOLT, BRACKET-STAY DAMPER	62625A	6230 -1	2 - L14
BOLT, BRIDGE-FRONT BRAKE	33697	3300A -2	1 - J13
	33697	3300B -2	1 - L13
	33697	3300 -3	1 - G13
BOLT, CARRIER	27604	2710 -2	1 - I11
	27604	2710A -2	1 - K11
	27604	2710C -2	1 - M11
BOLT, CLAMP	67801A	1850B -1	1 - J 8
BOLT, CLUTCH CUT SWITCH	43231	4300 -1	1 - H15
BOLT, CONNECTOR	13153A	1320B -1	1 - G 4
	13153A	1320BA-1	1 - I 4
	13377	1320B -1	1 - G 4
	146031	1400BA-1	1 - E 6
	146031	1400B -1	1 - C 6
	146311	1400BA-1	1 - E 6
	146311	1400B -1	1 - C 6
	146351	1400B -1	1 - C 6
	146351	1400BA-1	1 - E 6
	21666	1910 -1	1 - K 8
	43694	4340A -2	1 - M15
	43694	4340 -2	1 - K15
	43694A	4360A -1	1 - C16
	43694A	4360 -1	1 - N15
	43694A	4370 -2	1 - E16
BOLT, CONTROL LINK	28092	2830 -1	1 - F12
BOLT, CONTROL VALVE	19831	1920 -2	1 - M 8
	19832	1920 -2	1 - M 8
	19833	1920 -2	1 - M 8
BOLT, COVER-REGULATOR GUIDE	58597	5830A -4	2 - F12
BOLT, DAMPER-REAR	28398	2830 -1	1 - F12
BOLT, DUST COVER	26138	2610 -1	1 - F11
BOLT, FLANG-STEERING KNUCKLE	34318	3400B -1	1 - C14
BOLT, FLANGE-STEERING KNUCKLE	34318	3400A -1	1 - N13
	34318	3400 -1	1 - M13
BOLT, FUEL DISTRIBUTOR	13164	1320BA-1	1 - I 4
	13164	1320B -1	1 - G 4
BOLT FUEL DISTRIBUTOR REAR SIDE	13165B	1320BA-1	1 - I 4
	13165B	1320B -1	1 - G 4
BOLT, HINGE	51431A	5103 -1	2 - L 3
BOLT, HINGE-HEAD LAMP RETRACTABLE	51517	5103 -1	2 - L 3
	51518	5103 -1	2 - L 3
BOLT, HOOD OUTER	R1218	6330A -1	2 - E15
BOLT, HUB	26113B	2600 -1	1 - E1'
BOLT, INSULATOR-FRONT HEAT	56414B	4370 -2	1 - E16
	56414B	5390 -2	2 - D 6
	56414B	5390A -2	2 - F 6
BOLT, INTERCOOLER	13324B	1310BA-2	1 - E 4
BOLT JACK SET	56170A	3700A -1	1 - H14
	56170A	3700 -3	1 - G14
BOLT, JOINT	41412	4140B -1	1 - E15
BOLT, JOINT-MOTOR LINK	R1923	6330A -2	2 - F15
BOLT, LOCK	141171	1400BA-1	1 - E 6
	141171	1400B -1	1 - C 6
BOLT, LOWER ARM	26134	2600 -1	1 - E11
	26136	2600 -1	1 - E11
BOLT OIL PAN	19837	1920 -2	1 - M 8
BOLT, OIL PIPE	136391	1310BA-2	1 - E 4
BOLT, PULLEY	11376	1100BA-1	1 - J 3
	11376	1100B -1	1 - I 3
BOLT, REAR BRAKE	26121A	2610 -1	1 - F11
BOLT, REAR HOOK	5626X	5390A -2	2 - F 6
	5626X	5390 -2	2 - D 6
BOLT, REAR SENSOR	43708	4370 -2	1 - E16

PART NAME	D-CODE	SECTION	LOCATION
BOLT, RING GEAR	27235	2710C -1	1 - L11
	27235	2710A -1	1 - J11
	27235	2710 -1	1 - H11
BOLT, SET	14125	1400BA-1	1 - E 6
	14125	1400B -1	1 - C 6
	57051D	5700AB-2	2 - D10
	57051D	5700AC-3	2 - H10
	57051D	5700A -3	2 - E 8
	57051D	5700AA-6	2 - H 9
	60436	0900A -1	2 - C 3
BOLT, SIDE FRAME-FRONT	56313	5320 -1	2 - C 5
BOLT, SILENCER	56414A	3900B -1	1 - J14
	56414A	3900BA-1	1 - K14
	56414A	5390A -2	2 - F 6
	56414A	5390 -2	2 - D 6
BOLT, SPLASH SHIELD	5619X	5390 -2	2 - D 6
	5619X	5390A -2	2 - F 6
BOLT, STARTER	18401	1800B -2	1 - M 7
	18401	1800BA-2	1 - D 8
BOLT, TENSION	104511	1040B -1	1 - G 3
	104511	1040BA-1	1 - H 3
	104521	1040B -1	1 - G 3
	104521	1040BA-1	1 - H 3
BOLT, TENSION ROD	34134A	3400B -1	1 - C14
	34134A	3400 -1	1 - M13
	34134A	3400A -1	1 - N13
BOLT, TIE DOWN HOOK-FRONT	5622X	5320 -1	2 - C 5
	5622X	5320B -1	2 - D 5
BOLT, VANE PUMP	32631	3240 -2	1 - D13
BOLT, WHEEL	33062	3300A -2	1 - J13
	33062	3300 -3	1 - G13
	33062	3300B -2	1 - L13
BOOT	46757A	4600 -1	1 - I16
BOOT (L), DOOR MIRROR	69128)	6900A -3	3 - E 7
BOOT (R), DOOR MIRROR	69129A	6900A -3	3 E 7
BOOT KIT, FRONT CALIPER	49250B	3300 -4	1 - H13
BOOT KIT, REAR CALIPER	49250A	2610 -1	1 - F11
BOOT SET, INNER JOINT	22540	2550 -1	1 - D11
BOOT SET, OUTER JOINT	22530	2550 -1	1 - D11
BOOT, CHANGE	64331	5570 -1	2 - I 7
	64331B	5570 -1	2 - I 7
BOOT, DUST-CHANGE LEVER	17475	1720A -1	1 - K 7
	17475	1720 -1	1 - J 7
BOOT RACK	32125B	3220A -1	1 - L12
	32125B	3220 -1	1 - K12
	32126A	3220 -1	1 - K12
BOOT RELAY-WATER PROOF	67744	3240 -2	1 - D13
	67744	6600B -3	2 - I15
	67744	6600BA-3	2 - L15
	67744	6630 1	2 - F16
BOOT, TOP	R1860B	6330A -1	2 - E15
BOSS, STEERING WHEEL	32980	3200 -1	1 - H12
BOX (L), TORQUE	54391	5320B -1	2 - D 5
	54391	5320 -1	2 - C 5
BOX (R), TORQUE	53391	5320 -1	2 - C 5
	53391	5320B -1	2 - D 5
BOX AMP-HEATER CONTROL	61185B	6100 -1	2 - N13
BOX BATTERY	1859X	1850B -1	1 - J 8
BOX BULB	64050B	5560 -2	2 - G 7
BOX CONTROL	67770	6630 -1	2 - F16
BOX, CONTROL-BURGLAR ALARM	67790	6630 -1	2 - F16
BOX, DIODE	67240D	6702 -1	3 - M 3
BOX, STORAGE	69760A	6845 -1	3 - K 5
BRACKET		6132A -1	2 - G14
	18742	1800B -3	1 - N 7
	18835A	6600BA-2	2 K15

ALPHABETICAL INDEX

PART NAME	D-CODE	SECTION	LOCATION
BRACKET	18035A	6600B -2	2 - H15
	19960	1910 -1	1 - K 8
	40081	4000B -1	1 - L14
	40081	4000BA-1	1 - C15
	67520A	6750 -1	3 - K 4
BRACKET 'A', AIR DAM	519L2	7800 -1	3 - K 7
BRACKET 'A', CONTROL UNIT	53420	5370A -1	2 - M 5
	53420	5370 -1	2 - L 5
BRACKET 'B', AIR DAM	519L3	7800 -1	3 - K 7
BRACKET 'B', CONTROL UNIT	54630	5370 -1	2 - L 5
	54630	5370A -1	2 - M 5
BRACKET 'B', LAMP-CARGO ROOM	51445	5125 -1	2 - F 4
BRACKET (L)	519322	5103 -1	2 - L 3
BRACKET (L), CALIPER-REAR	26851Z	2610 -1	1 - F11
BRACKET (L), COAT HANGER	69532Z	6900A -5	3 - G 7
BRACKET (L), DAMPER STAY-QUARTER	52760	5340AA-1	2 - H 5
BRACKET (L), ENGINE	39030A	3900B -1	1 - J14
	39030A	3900BA-1	1 - K14
BRACKET (L), FENDER	54290A	5310A -1	2 - N 4
	54290A	5310 -1	2 - M 4
BRACKET (L), FORMING BAR	71130	5340AA-2	2 - I 5
BRACKET (L), HINGE-LAMP LID	51511Y	5103 -1	2 - L 3
BRACKET (L), INSTRUMENT	71260C	5340AA-2	2 - I 5
BRACKET (L), MIRROR	69177	6900A -3	3 - E 7
BRACKET (L), MOTOR-SIDE FRAME	5494X	5370A -2	2 - N 5
BRACKET (L), PILLAR GARNISH	71613	5330 -1	2 - E 5
BRACKET (L), RADIATOR	15V12	1500BA-2	1 - J 6
	15V12	1500B -2	1 - H 6
BRACKET (L), REAR-AUDIO	66904D	6680 -3	2 - K16
BRACKET (L), SILENCER-SIDE PANEL	54750	5370 -1	2 - L 5
	54750	5370A -2	2 - N 5
BRACKET (L), SPEAKER GRILLE	68428Y	5840A -6	2 - H13
	68428Y	5840AB-2	2 - L13
BRACKET (L), TRIM-QUARTER PANEL	71119	5340A -2	2 - G 5
	71512	5340AA-2	2 - I 5
BRACKET (L), TUNER	66902A	6680 -3	2 - K16
BRACKET (R)	51932	5103 -1	2 - L 3
BRACKET (R), ANTENNA	66AT3	6680 -4	2 - L16
BRACKET (R), CALIPER-REAR	26851	2610 -1	1 - F11
BRACKET (R), COAT HANGER	69532	6900A -5	3 - G 7
BRACKET (R), DAMPER STAY-QUARTER	52750	5340AA-1	2 - H 5
BRACKET (R), ENGINE	39020A	3900B -1	1 - J14
	39020A	3900BA-1	1 - K14
BRACKET (R), FENDER	53290A	5310A -1	2 - N 4
	53290A	5310 -1	2 - M 4
BRACKET (R), FORMING BAR	70130	5340AA-1	2 - H 5
BRACKET (R), HINGE-LAMP LID	51511A	5103 -1	2 - L 3
BRACKET (R), INSTRUMENT	70260E	5340AA-1	2 - H 5
BRACKET (R), MIRROR	69117	6900A -3	3 - E 7
BRACKET (R), MOTOR-SIDE FRAME	5394X	5370A -1	2 - M 5
BRACKET (R), PILLAR GARNISH	70613A	5330 -1	2 - E 5
BRACKET (R), RADIATOR	15V03	1500BA-2	1 - J 6
	15V03	1500B -2	1 - H 6
BRACKET (R), REAR-AUDIO	66903D	6680 -3	2 - K16
BRACKET (R), SILENCER-SIDE PANEL	53750	5370A -1	2 - M 5
	53750	5370 -1	2 - L 5
BRACKET (R), SPEAKER GRILLE	68428A	5840A -6	2 - H13
	68428A	5840A -5	2 - G13
	68428A	5840AB-2	2 - L13
BRACKET (R), TRIM-QUARTER PANEL	70119	5340A -1	2 - F 5
	70512	5340AA-2	2 - I 5
BRACKET (R), TUNER	66901A	6680 -3	2 - K16
BRACKET (RR) AUDIO	66AT7	6680 -4	2 - L16
BRACKET NO. 1	60431A	5560 -1	2 - F 7
BRACKET NO. 1 (L), GRILLE-TRIM	68411Z	5840A -1	2 - C13
	68411Z	5840AB-1	2 - K13
BRACKET NO. 1 (R), GRILLE-TRIM	68411	5840AB-1	2 - K13
	68411	5840A -1	2 - C13
BRACKET NO. 1, A.B.S.	43310	4370 -2	1 - E16
BRACKET NO. 1, FINISHER-REAR	50855	5180 -2	2 - J 4
BRACKET NO. 2	60432A	5560 -1	2 - F 7
BRACKET NO. 2, A.B.S.	43320	4370 -2	1 - E16
BRACKET NO. 2, FINISHER-REAR	50856C	5180 -2	2 - J 4
BRACKET NO. 2, LWR.-AUDIO	66AT8	6680 -4	2 - L16
BRACKET NO. 5, A.B.S.	43330	4370 -2	1 - E16
BRACKET SET, DASH POT-THROTTLE	13W80	1364BA-1	1 - D 5
	13W80	1364B -1	1 - C 5
BRACKET, A.C.C. BOX	66330B	6640 -1	2 - H16
BRACKET, ACCEL WIRE	13665B	1300B -1	1 - M 3
	13665B	1300BA-1	1 - N 3
BRACKET, ACCEL. WIRE-SURGE TANK	41770B	1300BA-1	1 - N 3
BRACKET, ACCEL. WIRE-THERMOSTAT	41667B	1300BA-1	1 - N 3
BRACKET, ACCELERATOR WIRE	41666B	1380BA-4	1 - N 5
BRACKET, AIR CLEANER	13310	1330B -1	1 - K 4
	13310	1330BA-1	1 - L 4
	13315A	1330B -1	1 - K 4
	13315A	1330BA-1	1 - L 4
	13317A	1330B -1	1 - K 4
	13317A	1330BA-1	1 - L 4
BRACKET, AIR PUMP	13920	1371B -1	1 - E 5
	13920	1371BA-1	1 - F 5
BRACKET, ALTERNATOR	18371	1800BA-2	1 - D 8
	18371	1800B -2	1 - M 7
BRACKET AMP-AE SYSTEM	66921C	6680 -3	2 - K16
BRACKET, AUDIO	66878	6680 -3	2 - K16
BRACKET, BATTERY	54260	5390 -2	2 - D 6
	54260	5390A -2	2 - F 6
BRACKET, BATTERY CABLE	67280B	6701A -1	3 - K 3
	67280B	6701 -1	3 - J 3
	67280B	6701B -1	3 - L 3
BRACKET, BUMPER	50110A	5000 -1	2 - E 3
BRACKET, CANISTER	13960	1320B -1	1 - G 4
	13960	1320BA-2	1 - J 4
BRACKET, CENTER PANEL	60406	5560 -1	2 - F 7
BRACKET, CLIP	18995A	6704 -2	3 - F 4
BRACKET, COMPRESSOR		6142A -1	2 - I14
		6142A -1	2 - I14
	15920	1580B -1	1 - K 6
BRACKET, CONSOLE-NO. 1	64413	5570 -1	2 - I 7
BRACKET, CONTROL UNIT	188201	6600B -2	2 - H15
	188201	6600BA-2	2 - K15
	18883	6600B -2	2 - H15
	18883	6600BA-2	2 - K15
	18885A	6600B -2	2 - H15
	18885A	6600BA-2	2 - K15
	18385B	6600BA-2	2 - K15
	18885B	6600B -2	2 - H15
BRACKET, CORD-AUDIO	66980	6682 -3	3 - E 3
BRACKET, DRIVE UNIT	69844	6330 -1	2 - C15
BRACKET, FRONT	24550	1830BA-1	1 - G 8
	24550	1830B -1	1 - F 8
	24710	1840BA-1	1 - I 8
	24710	1840B -1	1 - H 8
BRACKET, GARNISH-INSTRUMENT	60733	5560 -2	2 - G 7
BRACKET, GRILLE	53781	5310 -1	2 - M 4
	53781	5310A -1	2 - N 4
BRACKET, HANGER	40220	4000B -1	1 - L14
	40220	4000BA-1	1 - C15
	40230	4000B -1	1 - L14
	40230	4000BA-1	1 - C15
	40650	4000BA-1	1 - C15
	40650	4000B -1	1 - L14
BRACKET, HANGER-ENGINE	10570	1040BA-1	1 - H 3
BRACKET, HANGER-MONOLITH CONVERTER	4054X	4000BA-1	1 - C15
BRACKET, HANGER-MONOLITHIC CONVERTER	4054X	4000B -1	1 - L14
BRACKET, HIGH TENSION WIRE SUPPORTER	18151	1800B -2	1 - M 7
BRACKET, HOLE-ENGINE WIRING	18054	6701A -1	3 - K 3
	18054	6701B -1	3 - L 3
	18054	6701 -1	3 - J 3
BRACKET, HOOD	50653	5230 -1	2 - K 4
BRACKET, HORN	67901	6635 -1	2 - G16
BRACKET, IGNITION COIL	18120	1800B -2	1 - M 7
	18120	1800BA-2	1 - D 8
	181901	1800B -2	1 - M 7
	181901	1800BA-2	1 - D 8
BRACKET, IGNITION COIL-TRAILING	18T15A	1800B -3	1 - N 7
	18T15A	1800BA-3	1 - E 8
BRACKET, INTERCOOLER	20650	1310BA-3	1 - F 4
BRACKET, LEVER	4110	4600 -1	1 - I16
BRACKET, LOW	66704C	6680 -3	2 - K16
BRACKET, LOWER ARM	34201	3400A -1	1 - N13
	34201	3400 -1	1 - M13
	34201	3400B -1	1 - C14
BRACKET, MAIN FUSE CASE	67980B	6700A -1	3 - H 3
	67980B	6700B -1	3 - I 3
	67980B	6700 -1	3 - G 3
BRACKET, MAIN RELAY-A.B.S.	43798	4370 -2	1 - E16
BRACKET, MASTER CYLINDER	43070	4300 -1	1 - H15
BRACKET, MOTOR-ANTENNA	66936A	6682 -2	3 - D 3
BRACKET, OIL HOSE	147401	1500BA-1	1 - I 6
	147401	1500B -1	1 - G 6
BRACKET, OVERHEAD CONSOLE	69980A	5130 -1	2 - G 4
BRACKET, P.B. VALVE	41780A	4360 -1	1 - N15
	41780A	4360A -1	1 - C16
BRACKET, PIPE	19940	1910 -1	1 - K 8
BRACKET, PIPE HOLDER	43721	4370 -2	1 - E16
BRACKET, QUARTER TRIM	68505A	7250 -1	3 - J 7
BRACKET, REAR	24740	1840B -1	1 - H 8
	24740	1840BA-1	1 - I 8
BRACKET, REINFORCEMENT-FRONT BUMPER	50160	5000 -1	2 - E 3
BRACKET, RELAY	67742	3240 -2	1 - D13
	67742	6600BA-3	2 - L15
	67742	6600B -3	2 - I15
	67742	6630 -1	2 - F16
	67742A	6630 -1	2 - F16
BRACKET, RELAY-SET PLATE	5318X	5310A -1	2 - N 4
	5318X	5310 -1	2 - M 4
BRACKET, RESISTOR	18590	6600BA-2	2 - K15
	18590	6600B -2	2 - H15
BRACKET, SET-SUNROOF FRAME	69851A	7330 -1	2 - C15
BRACKET, STABILIZER	34160A	3400B -1	1 - C14
	34160A	3400 -1	1 - M13
	34160A	3400A -1	1 - N13
BRACKET, STABILIZER SUPPORT	28155	2810 -1	1 - E12
BRACKET, STARTER	18401C	1800B -2	1 - M 7
	18402A	1800B -2	1 - M 7
BRACKET, SUB TANK	15251	1500B -2	1 - H 6
	15251	1500BA-2	1 - J 6
BRACKET, SUPPORT-HIGH TENSION WIRE	18144	1800BA-2	1 - D 8
	18144	1800B -2	1 - M 7
BRACKET, SURGE TANK	13140	1300BA-1	1 - N 3
BRACKET, TANK	135151	1350BA-1	1 - N 4
	135151	1350B -1	1 - M 4
BRACKET, TRANSMISSION MOUNTING	39410	3900BA-1	1 - K14
	39410	3900B -1	1 - J14
BRACKET, TRUNK BOARD	68832A	6860AB-1	3 - E 6
BRACKET, VACUUM PIPE	43880	4340A -2	1 - M15

ALPHABETICAL INDEX

PART NAME	D-CODE	SECTION	LOCATION
BRACKET, VACUUM PIPE	43880	4340 -2	1 - K15
BRACKET, WASHER TANK	67521	6720 -2	3 - H 4
BRACKET, WIRING	67033A	6702 -1	3 - M 3
BREAKER	66733A	6700A -1	3 - H 3
	66733A	6700 -1	3 - G 3
BREATHER	26060	2710C -1	1 - L11
	26060	2710 -1	1 - H11
	26060	2710A -1	1 - J11
BREATHER, AIR	19344	1920 -1	1 - L 8
BREATHER, AIR-T MISSION	17530	1700A -1	1 - C 7
	17530	1700 -1	1 - N 6
BRUSH	24522	1830BA-1	1 - G 8
	24522	1830B -1	1 - F 8
BRUSH, YOKE	24753	1840BA-1	1 - I 8
	24753	1840B -1	1 - H 8
BULB	51030J	5500 -1	2 - G 6
	51030J	5500B -1	2 - J 6
	51030J	5500A -1	2 - I 6
	51030J	5540A -1	2 - C 7
	51030J	5540B -1	2 - E 7
	51030J	5540 -1	2 - M 6
	51030J	5560 -1	2 - F 7
	51030J	5570 -1	2 - I 7
	51030J	6845 -1	3 - K 5
	51060G	5105 -1	2 - M 3
	51060G	5110A -1	2 - C 4
	51070K	5110A -1	2 - C 4
	51110J	5105 -1	2 - M 3
	51110J	5120 -1	2 - E 4
	51270J	5120 -1	2 - E 4
	51330J	5125 -1	2 - F 4
	51550J	5840AB-1	2 - K13
	51550J	5840A -1	2 - C13
	76196	6115 -1	2 - D14
BULB & SOCKET	55280	5500B -1	2 - J 6
	55280	5500 -1	2 - G 6
	55280	5500A -1	2 - I 6
	55280	5570 -1	2 - I 7
BULB 'A', CLUSTER SWITCH	66161	6612 -1	2 - C16
BULB 'A', WARNING UNIT	55431B	5500 -1	2 - G 6
	55431B	5500A -1	2 - I 6
BULB 'B', CLUSTER SWITCH	66162D	6612 -1	2 - C16
BULB 'B', WARNING UNIT	55431C	5500 -1	2 - G 6
	55431C	5500A -1	2 - I 6
	55431C	5500B -1	2 - J 6
BULB 'C', CLUSTER SWITCH	66163C	6612 -1	2 - C16
BULB 'D', CLUSTER SWITCH	66164E	6612 -1	2 - C16
BULB, INTERIOR MIRROR	69170K	6900A -3	3 - E 7
BUMPER, BOUND	34111	3400B -1	1 - C14
	34111	3400 -1	1 - M13
	34111	3400A -1	1 - N13
BUSHING		6132A -1	2 - G14
	13184	1300B -1	1 - M 3
	15925A	1580B -1	1 - K 6
	41023A	4300 -1	1 - H15
	41644	4160 -1	1 - F15
	41644	4300 -1	1 - H15
	46085	4300 -1	1 - H15
	46085	4600 -1	1 - I16
	46684	4600 -1	1 - I16
BUSHING, CENTER RING	46092	4600 -1	1 - I16
BUSHING, CHANGE	17481A	1720A -1	1 - K 7
	17481A	1720 -1	1 - J 7
BUSHING, ELBOW JOINT	49686B	4140B -1	1 - E15
	49686B	4340 -2	1 - K15
	49686B	4340A -2	1 - M15
BUSHING, HINGE	88105G	5700AA-9	2 - K 9
	88105G	5700AB-2	2 - D10
	88105G	5700AC-3	2 - H10
	88105G	5700A -4	2 - F 8
BUSHING, INNER	76607A	6750 -1	3 - K 4
BUSHING, LOWER ARM	28460	2830 -1	1 - F12
BUSHING, RACK	32114	3220 -1	1 - K12
BUSHING, RUBBER	32155	3220A -1	1 - L12
BUSHING, RUBBER FRONT	34470	3400 -1	1 - M13
BUSHING, RUBBER-FRONT	34470	3400A -1	1 - N13
	34470	3400B -1	1 - C14
BUSHING, RUBBER-LOWER ARM	34460	3400B -1	1 - C14
	34460	3400 -1	1 - M13
	34460	3400A -1	1 - N13
BUSHING, RUBBER-REAR DAMPER	28015B	2800B -1	1 - D12
	28015B	2800 -1	1 - N11
	28015B	2800A -1	1 - C12
	28016B	2800 -1	1 - N11
	28016B	2800A -1	1 - C12
	28016B	2800B -1	1 - D12
BUSHING, RUBBER-REAR LOWER ARM	26220	2830 -1	1 - F12
BUSHING, STABILIZER-REAR	28102	2810 -1	1 - E12
BUTTON, RELEASE	44033	4400 -1	1 - F16
*** C ***			
CABINET, BOTTOM		6152A -1	2 - J14
CABLE (R), PARKING	44410	4400 -1	1 - F16
CABLE, ACCELERATOR	41660	4160 -1	1 - F15
CABLE, F LID OPENER	56880A	6230 -1	2 - L14
CABLE, OPENER	62352	5260 -1	2 - L 4
	62352	6230 -1	2 - L14
CABLE, PARKING	44150	4400 -1	1 - F16
CABLE, SPEEDOMETER	60070	5530 -1	2 - L 6
CALIPER (L), FRONT BRAKE	33980Z	3300B -2	1 - L13
	33980Z	3300A -2	1 - J13
	33980Z	3300 -3	1 - G13
CALIPER (L), REAR BRAKE	26610Z	2610 -1	1 - F11
	26980Z	2610 -1	1 - F11
CALIPER (R), FRONT BRAKE	33980	3300A -2	1 - J13
	33980	3300B -2	1 - L13
	33980	3300 -3	1 - G13
CALIPER (R), REAR BRAKE	26610	2610 -1	1 - F11
	26980	2610 -1	1 - F11
CAM, CANCEL	60253	6611 -1	2 - N15
CANISTER	13970	1320BA-2	1 - J 4
	13970	1320B -2	1 - H 4
CAP	10481	1330BA-1	1 - L 4
	10481	1330B -1	1 - K 4
	42307	1380B -4	1 - J 5
	45961B	4360 -1	1 - N15
	45961B	4360A -1	1 - C16
	45961B	6682 -2	3 - D 3
	45961B	6704 -2	3 - F 4
	58505E	5830AA-2	2 - I12
	58505E	5830A -4	2 - F12
	58505E	6230 -1	2 - L14
	68018B	6800A -1	3 - M 4
	68018B	6820A -1	3 - D 5
CAP (L), PULL HANDLE	69374Z	5840A -8	2 - J13
CAP (R), PULL HANDLE	69374	5840A -7	2 - I13
CAP SET, FILLER-RADIATOR	1517YA	1500B -1	1 - G 6
	1517YA	1500BA-1	1 - I 6
CAP SET, RESERVE TANK	43552S	4140B -1	1 - E15
	43552S	4340A -2	1 - M15
	43552S	4140B -1	1 - E15
	43552S	4340 -2	1 - K15
	43552S	4340A -2	1 - M15
CAP, BLEEDER SCREW	33693A	2610 -1	1 - F11
	33693A	3300 -3	1 - G13
	33693A	4140B -1	1 - E15
CAP, BLIND	13104I	1380BA-3	1 - M 5
	13104J	1300B -1	1 - M 3
	13104J	1300BA-1	1 - N 3
	13104K	1330B -1	1 - K 4
CAP, BLIND-CRANK ANGLE SENSOR	18V99	6600B -3	2 - I15
	18V99	6600BA-3	2 - L15
CAP, CENTER	37190	3700 -1	1 - E14
CAP, CRANK ANGLE SENSOR	18237	6600BA-2	2 - K15
	18237	6600B -2	2 - H15
CAP, DAMPER	34019	3400B -1	1 - C14
	34019	3400 -1	1 - M13
CAP, FILLER	32603	3240 -2	1 - D13
	42250	4200 -1	1 - G15
CAP, FILLER-WATER PUMP	1517Y	1500BA-1	1 - I 6
	1517Y	1500B -1	1 - G 6
CAP, GARNISH	60701	5560 -1	2 - F 7
CAP, HINGE-HEAD LAMP RETRACTABLE	51516A	5103 -1	2 - L 3
CAP, HORN	32800	3200 -1	1 - H12
CAP, HUB	33071	3300B -2	1 - L13
	33071	3300 -3	1 - G13
	33071	3300A -2	1 - J13
CAP, IDLE SWITCH	13205B	1330B -1	1 - K 4
CAP, OIL FILLER	102501	1030BA-1	1 - F 3
	102501	1030B -1	1 - E 3
CAP, PARK BRAKE LEVER	44034	4400 -1	1 - F16
CAP, RADIATOR	15205	1500BA-2	1 - J 6
	15205	1500B -2	1 - H 6
CAP, REAR SPOILER	51962C	7800 -1	3 - K 7
CAP, RUBBER	33693	3300 -3	1 - G13
	33693	3300B -2	1 - L13
	33693	3300A -2	1 - J13
CAP, SEAL	66371	6750 -1	3 - K 4
CAP, SPRING	17474A	1720A -1	1 - K 7
	17474A	1720 -1	1 - J 7
	17491B	1720 -1	1 - J 7
	17491B	1720A -1	1 - K 7
CAP, SUB TANK	15355A	1500BA-2	1 - J 6
	15355A	1500B -2	1 - H 6
CAP, TANK	76672A	6720 -2	3 - H 4
	76672A	6750 -1	3 - K 4
CARRIER, DIFFERENTIAL	27150	2710C -1	1 - L11
	27150	2710A -1	1 - J11
	27150	2710 -1	1 - H11
CARRIER, FRONT	19540	1930 -2	1 - F 9
CARRIER, OVERDRIVE	21540	1930 -2	1 - F 9
CARRIER REAR	19570	1930 -2	1 - F 9
CARTRIDGE, OIL FILTER	23802	1400B -2	1 - D 6
	23802	1400BA-2	1 - F 6
CASE	27230	2710 -1	1 - H11
	27230	2710C -1	1 - L11
	27230	2710A -1	1 - J11
CASE (L), BLOWER	76452C	6120 -1	2 - E14
CASE (L), HEATER UNIT	76502C	6110 -1	2 - C14
CASE (R), BLOWER	76451C	6120 -1	2 - E14
CASE (R), HEATER UNIT	76501C	6110 -1	2 - C14
CASE, CHANGE CONTROL	17470	1720 -1	1 - J 7
	17470	1720A -1	1 - K 7
CASE, CONTROL UNIT	67571	6630 -1	2 - F16
CASE, LAMP	60245A	5500 -1	2 - G 6
	60245A	5500A -1	2 - I 6
	60245A	5500B -1	2 - J 6

ALPHABETICAL INDEX

PART NAME	D-CODE	SECTION	LOCATION
CASE, METER	55441A	5540A -1	2 - C 7
	55441A	5540B -1	2 - E 7
	55441A	5540 -1	2 - M 6
CASE, OVERDRIVE	21320	1920 -2	1 - M 8
CASE, T MISSION	17100	1700 -1	1 - N 6
	17100	1700A -1	1 - C 7
	19310	1920 -1	1 - L 8
CASE, TOP		6152A -1	2 - J14
CASING, DIFFERENTIAL	27600	2710 -2	1 - I11
	27600	2710C -2	1 - M11
	27600	2710A -2	1 - K11
CASING, STOPPER	39045	3900B -1	1 - J14
	39045	3900BA-1	1 - K14
CATCH (L), RR. SEAT BACK	88469	5750A -3	2 - L10
	88469	5750AA-5	2 - G11
CATCH (R), RR. SEAT BACK	88269	5750A -2	2 - K10
	08269	5750AA-5	2 - G11
CEILING TOP	68030	6800A -1	3 - M 4
CEILING, TOP-HOOD	R1220	6330A -1	2 - E15
CHAIN, OIL PUMP	14151	1400BA-1	1 - E 6
	14151	1400B -1	1 - C 6
CHAMBER (L), EXTRACTOR	51940X	5180 -2	2 - J 4
CHAMBER (R), EXTRACTOR	51940B	5180 -2	2 - J 4
CHAMBER AIR	13283	1380BA-3	1 - M 5
	13283	1380B -3	1 - I 5
CHANNEL (L), DIVISION-DOOR	58604Z	5800AA-1	2 - K11
CHANNEL (L), GLASS RUN	58605Y	5800A -1	2 - J11
CHANNEL (R), DIVISION-DOOR	58604	5800AA-1	2 - K11
CHANNEL (R), GLASS RUN	58605C	5800A -1	2 - J11
CHANNEL, T CEILING-FRONT	68032G	6800A -1	3 - M 4
CHANNEL, T CEILING-REAR	68034	6800A -1	3 - M 4
CHANNEL, T CEILING-SIDE	68033B	6800A -1	3 - M 4
CHARGER, TURBO	137001	1310BA-2	1 - E 4
CHECKER, DOOR	58270A	5830AA-1	2 - H12
	58270A	5830A -1	2 - C12
CLAMP		6152A -1	2 - J14
CLAMP, BATTERY	56030	1850B -1	1 - J 8
CLAMP, HOSE	13226	1330B -1	1 - K 4
	18291B	1380B -3	1 - I 5
CLAMP, HOSE-A I. PIPE SIDE	13736	1310BA-2	1 - E 4
CLAMP, SPARE TIRE	56210B	3700 -3	1 - G14
	56210B	3700A -2	1 - I14
CLAMP, WATER HOSE	15182	1500BA-1	1 - I 6
	15182	1500B -1	1 - G 6
CLEANER, AIR	13320	1330BA-1	1 - I 4
	13320	1330B -1	1 - K 4
CLIP		6132A -1	2 - G14
		6132A -1	2 - G14
		6132A -1	2 - G14
		6132A -1	2 - G14
		6152A -1	2 - J14
		6152A -1	2 - J14
	13157A	1320BA-1	1 - I 4
	13157A	1320B -1	1 - G 4
	13157A	4500B -1	1 - G16
	13157A	4500BA-1	1 - H16
	13447	1320BA-1	1 - I 4
	13447	1380BA-3	1 - M 5
	13447	1380B -3	1 - I 5
	134481	1320B -1	1 - G 4
	134481	1320BA-1	1 - I 4
	18226	6704 -2	3 - F 4
	18768	5260 -1	2 - L 4
	18861	6704 -2	3 - F 4
	18867	1371BA-1	1 - F 5
	19917	1910 -1	1 - K 8
	19941	1910 -1	1 - K 8
	27421	2710A -2	1 - K11
	27421	2710 -2	1 - I11
	27421	2710C -2	1 - M11
	32606	3240 -2	1 - D13
	44189	4400 -1	1 - F16
	45902B	4360A -1	1 - C16
	50036E	5000 -1	2 - E 3
	50036E	5010A -1	2 - G 3
	50152A	5000 -1	2 - E 3
	50152A	5010A -1	2 - G 3
	58315J	5830AA-1	2 - H12
	58315J	5830A -1	2 - C12
	58315J	5230 -1	2 - L14
	58316	5830A -1	2 - C12
	58316A	5830A -1	2 - C12
	58316A	5830AA-1	2 - H12
	58763	5830A -5	2 - G12
	59315	0900A -1	2 - C 3
	59315	5260 -1	2 - L 4
	59315	5830AA-2	2 - H12
	59315	5830A -5	2 - G12
	60071C	4160 -1	1 - F15
	60071C	5530 -1	2 - L 6
	66365A	4300 -1	1 - H15
	66365C	6640 -1	2 - H16
	66891	6682 -2	3 - D 3
	66941A	6682 -2	3 - D 3
	66941A	6704 -2	3 - F 4
	66941A	6750 -1	3 - K 4
	66941C	6704 -2	3 - F 4
	67012A	6704 -2	3 - F 4
	67014A	6704 -2	3 - F 4
	67019	6704 -2	3 - F 4
	67021	5530 -1	2 - L 6
	67031B	6704 -2	3 - F 4
	67051E	6704 -2	3 - F 4
	67051F	6230 -2	2 - M14
	67052D	5560 -3	2 - H 7
	67052J	6704 -2	3 - F 4
	67072A	5560 -3	2 - H 7
	67072A	6704 -2	3 - F 4
	67073	6704 -2	3 - F 4
	67519C	6720 -2	3 - H 4
	68712B	6840A -1	3 - F 5
	68712B	6840AB-1	3 - J 5
	76448A	5830A -5	2 - G12
	76448A	5830AA-2	2 - H12
	76448A	6230 -2	2 - M14
CLIP 'B', PIPE-REAR WASHER	67057E	6750 -1	3 - K 4
CLIP (L), INNER HANDLE	58335Z	5830AA-1	2 - H12
	58335Z	5830A -1	2 - C12
CLIP (L), TRIM	68866Y	6865A -1	3 - G 6
CLIP (R)	58315D	0900A -1	2 - C 3
	58315D	5830A -1	2 - C12
	58315D	5830AA-1	2 - H12
CLIP (R), TRIM	68866A	6865A -1	3 - G 6
CLIP KIT, STEERING GEAR	32186C	3220A -1	1 - L12
CLIP SET	22550	2550 -1	1 - D11
CLIP, AIR HOSE	13726	1330BA-1	1 - L 4
	13726	1330B -1	1 - K 4
	13726	1371BA-1	1 - F 5
	13726	1371B -1	1 - E 5
	13726	1380BA-3	1 - M 5
	13726	1380B -3	1 - I 5
CLIP, ANTI-LOCK BRAKE SYSTEM	43776	4370 -2	1 - E16
CLIP, CABLE	44439	4400 -1	1 - F16
	67254	5103 -1	2 - L 3
	67254	5105 -1	2 - M 3
	67254	6704 -2	3 - F 4
	67293	6704 -2	3 - F 4
CLIP, CORD-CLUSTER SWITCH	66169C	6612 -1	2 - C16
CLIP, DASHBOARD INSULATOR	68622C	6860A -1	3 - L 5
	68622C	6860AA-1	3 - C 6
	68622C	6865AA-1	3 - H 6
	68622C	6865A -1	3 - G 6
CLIP, DEFLECTOR LINK	698855	6330 -1	2 - C15
CLIP, DEFROSTER GRILLE	60786	5560 -2	2 - G 7
CLIP, DRAIN HOSE-FRONT	67101G	6330 -1	2 - C15
CLIP, DRAIN HOSE-SUNROOF	69923	6330 -2	2 - D15
CLIP, ENGINE HARNESS	18994A	6704 -2	3 - F 4
CLIP, FLEXIBLE HOSE	43635	4360 -1	1 - N15
	43635	4360A -1	1 - C16
	43635	4400 -1	1 - F16
	43635A	4140B -1	1 - E15
CLIP, FLUID HOSE	20870B	1380BA-4	1 - N 5
CLIP, FUEL PIPE	45918	4500BA-1	1 - H16
	45918	4500B -1	1 - G16
CLIP, GARNISH	68042B	6865A -1	3 - G 6
CLIP, GARNISH-INSTRUMENT	60728	5560 -1	2 - F 7
CLIP, HARNESS-OUTER HANDLE	58412E	5830AA-1	2 - H12
	58412E	5830A -2	2 - D12
CLIP, HOSE-SUB TANK & WATER HOSE	15388	1500BA-2	1 - J 6
	15388	1500B -2	1 - H 6
CLIP, M OIL TUBE	14668A	1400BA-2	1 - F 6
CLIP, METERING OIL TUBE	14668A	1400B -1	1 - C 6
CLIP, MOTOR-BLOWER UNIT	61819	6120 -1	2 - E14
CLIP, OIL HOSE	14717	1500BA-1	1 - I 6
	14717	1500B -1	1 - G 6
CLIP, OIL TUBE	14296	1400B -1	1 - C 6
	14296	1400BA-1	1 - E 6
CLIP, OPENER CABLE	67054H	5230 -1	2 - K 4
	67054H	6750 -1	3 - K 4
CLIP, PIPE	45903D	1910 -1	1 - K 8
	45919	4500BA-1	1 - H16
	45919	4500B -1	1 - G16
	45919C	4360 -1	1 - N15
	45919C	4360A -1	1 - C16
	45919C	4500B -1	1 - G16
	45919C	4500BA-1	1 - H16
	67519	6720 -2	3 - H 4
CLIP, QUARTER TRIM	68521A	7250 -1	3 - J 7
CLIP, REAR SPOILER	51RS4	7800 -1	3 - K 7
CLIP, RR. PILLAR TRIM	68053D	6865AA-1	3 - H 6
CLIP SEAL RUBBER-INTERCOOLER	13557	1310BA-2	1 - E 4
CLIP, STOP LAMP-HIGH MOUNTED	51587A	5110A -2	2 - D 4
CLIP, TRIM	68865N	6865AA-1	3 - H 6
	68865N	6865A -1	3 - G 6
	68865S	6865AA-1	3 - H 6
CLIP, TUBE-REGULATOR GUIDE	58596	5830A -4	2 - F12
CLIP, TUBULAR	51782	5170 -1	2 - H 4
CLIP, WATER HOSE	13785	1380B -3	1 - I 5
	13785	1380BA-3	1 - M 5
	20820A	1380BA-4	1 - N 5
CLIP WATER HOSE-BY. A.C.V	20820A	1310BA-3	1 - F 4
CLIP WEATHERSTRIP, OUTER	58815A	5840A -1	2 - C13
CLIP, WEATHERSTRIP-OUTER	58815A	5840AB-1	2 - K13
CLIP, WIRE-BONNET	56775	5230 -1	2 - K 4
	56775	6720 -2	3 - H 4
CLOTH, ROOF PANEL	R1217	6330A -1	2 - E15
CLUTCH ASSEMBLY		6142A -1	2 - I14
CLUTCH, DIRECT	21510	1930 -2	1 - F 9

ALPHABETICAL INDEX

PART NAME	D-CODE	SECTION	LOCATION
CLUTCH, FRONT	19460	1930 -1	1 - E 9
CLUTCH, ONE-WAY	19595	1940 -1	1 - H 9
CLUTCH, REAR	19510	1930 -1	1 - E 9
COCK, DRAIN	15207	1500BA-2	1 - J 6
	15207	1500B -2	1 - H 6
COIL & IGNITER, LEADING	18100B	1800BA-2	1 - D 8
	18100B	1800B -2	1 - M 7
COIL & IGNITER, TRAILING	18100C	1800B -2	1 - M 7
	18100C	1800BA-2	1 - D 8
COIL, EVAPORATOR		6152A -1	2 - J14
COIL, FIELD		6142A -1	2 - I14
COIL, IGNITION-LEADING	18100D	1800BA-2	1 - D 8
	18100D	1800B -2	1 - M 7
COIL, IGNITION-TRAILING	18100E	1800B -2	1 - M 7
	18100E	1800BA-2	1 - D 8
COLLAR, CLUTCH RELEASE	16510	1600A -1	1 - M 6
	16510	1600 -1	1 - L 6
COLLAR, COMPRESSOR BRACKET	15933	1580B -1	1 - K 6
COLLAR, COMPRESSOR BRACKET-PULLEY	15942	1580B -1	1 - K 6
COLLAR, HARNESS-SIDE SILL	56944	5390 -2	2 - D 6
	56944	5390A -2	2 - F 6
COLLAR, LONG-DRIVE & DIFFERENTIAL	27172	2710A -1	1 - J11
	27172	2710 -1	1 - H11
	27172	2710C -1	1 - L11
COMPRESSOR		6142A -1	2 - I14
COMPRESSOR/CLUTCH ASSEMBLY		6142A -1	2 - I14
CONDENSER	66991C	6684 -1	3 - F 3
CONDENSER ASSEMBLY		6132A -1	2 - G14
CONNECTING, SHELL	21565	1930 -2	1 - F 9
CONNECTOR	13160D	1350BA-1	1 - N 4
	13945B	6600B -2	2 - H15
CONNECTOR, AIR TUBE	14617	1400B -1	1 - C 6
	14617	1400BA-1	1 - E 6
CONNECTOR, FLUID HOSE	1317X	1350B -1	1 - M 4
	1317X	1350BA-1	1 - N 4
CONNECTOR, FUEL	13295	1320B -1	1 - G 4
	13490	1320BA-1	1 - I 4
	20237	1320BA-2	1 - J 4
	20237	1320B -2	1 - H 4
CONNECTOR, FUEL-FUEL DISTRIBUTOR	13295	1320BA-1	1 - I 4
CONNECTOR, SHORT	67741	6630 -1	2 - F16
	67741	6702A -1	3 - N 3
	67741	6702 -1	3 - M 3
CONNECTOR, STRAIGHT	19332	1920 -1	1 - L 8
CONSOLE, OVERHEAD	69810	5130 -1	2 - G 4
CONSOLE, REAR	64410	5570 -1	2 - I 7
CONTACT, HORN	60267	6611 -1	2 - N15
CONTROL UNIT	189401	6600BA-2	2 - K15
	189401	6600B -3	2 - I15
CONTROL UNIT, E.G.I.	18880A	6600BA-2	2 - K15
	18880A	6600B -2	2 - H15
CONTROL UNIT, KNOCK	18771A	6600BA-2	2 - K15
CONTROL, HEATER	61190	6100 -1	2 - N13
CONTROL, REMOTE-AUDIO	6691O	6680 -4	2 - L16
CONTROLLER	32400	3240 -2	1 - D13
CONTROLLER, AE SYSTEM-DISC	66AFO	6680 -4	2 - L16
CONVERTER NO. 1, PRE	40780A	4000B -1	1 - L14
CONVERTER NO. 2, PRE	40400A	4000B -1	1 - L14
CONVERTER, MONOLITH	20500A	4000BA-1	1 - C15
	20500A	4000B 1	1 - L14
	404001	4000B -1	1 - L14
	404001	4000BA-1	1 - C15
CONVERTER, TORQUE	19100A	1910 -1	1 - K 8
COOLER, OIL	147001	1500BA-1	1 - I 6
	147001	1500B -1	1 - G 6
CORD	32039	3200 -1	1 - H12
CORD, GROUND	66872E	6684 -1	3 - F 3
CORD, LICENSE LAMP	51290	5120 -1	2 - E 4
CORD, METER SET	55435	5540B -1	2 - E 7
	55435	5540A -1	2 - C 7
	55435	5540 -1	2 - M 6
CORD, REAR COMBINATION	51169D	5110A -1	2 - C 4
CORD, SHORT	66970G	6680 -3	2 - K16
CORD, SHORT-FRT. SEAT BACK	88570	5700AC-4	2 - I10
CORD, SPEAKER	66965A	5700AC-3	2 - H10
CORE, HEATER	76405	6110 -1	2 - C14
COVER	13187	1300B -1	1 - M 3
	19240	1910 -1	1 - K 8
	44061A	4400 -1	1 - F16
	44062	4400 -1	1 - F16
COVER 'A' (L), FRAME-GLASS HATCH	63865	6230 -2	2 - M14
COVER 'A' (R), FRAME-GLASS HATCH	62865	6230 -1	2 - L14
COVER 'B' (L), FRAME-GLASS HATCH	63866	6230 -2	2 - M14
COVER 'B' (R), FRAME-GLASS HATCH	62866A	6230 -1	2 - L14
COVER 'I', HYDRAULIC UNIT	437A5	4370 -2	1 - E16
COVER 'L', HYDRAULIC UNIT	437A4	4370 -2	1 - E16
COVER (L), BELT	68261Z	6810 -1	3 - C 5
COVER (L), DUST	33261Z	3300A -2	1 - J13
	33261Z	3300 -3	1 - G13
	33261Z	3300B -2	1 - L13
COVER (L), DUST-DOOR TRIM	68423Z	5840AB-1	2 - K13
	68423Z	5840A -5	2 - G13
COVER (L), GARNISH-INSTRUMENT	60731Y	5560 -1	2 - F 7
COVER (L), HINGE	68281Z	6810 -1	3 - C 5
COVER (L), HOLE-DASHBOARD INSULATOR	68624X	6860AA-1	3 - C 6
	68624X	6860A -1	3 - L 5
COVER (L), INNER HANDLE	58303Z	5830AA-1	2 - H12
	58303Z	5830A -1	2 - C12
COVER (L), KNUCKLE	88166	5700AA-11	2 - M 9
	88166	5700AC-4	2 - I10
	88166	5700A 7	2 - I 8
	88166	5700AB-3	2 - E10
COVER (L), LINK	6824YZ	6810 -1	3 - C 5
COVER (L), PASSING HOLE	51370	5103 -1	2 - L 3
COVER (L), POCKET-DOOR TRIM	68429Y	5840A -6	2 - H13
	68429Y	5840AB-2	2 - L13
COVER (L), QUARTER PILLAR	68633Z	6860A -1	3 - L 5
	68633Z	6860AA-1	3 - C 6
COVER (L), RETRACTOR-FRONT	68637Z	6860A -1	3 - L 5
	68637Z	6860AA-1	3 - C 6
COVER (L), RETRACTOR-REAR	68632Z	6860AA-1	3 - C 6
	68632Z	6860A -1	3 - L 5
COVER (L), SERVICE-REAR FLOOR	56920C	5390A -2	2 - F 6
	56920C	5390 -2	2 - D 6
COVER (L), SIDE	64911Y	5560 -3	2 - H 7
COVER (L), SIDE NO. 2	64914Z	5560 -3	2 - H 7
COVER (L), T END TRIM	68882Y	6840A -3	3 - H 5
COVER (R), BELT	68261	6810 -1	3 - C 5
COVER (R), DUST	33261	3300B -2	1 - L13
	33261	3300A -2	1 - J13
	33261	3300 -3	1 - G13
COVER (R), DUST-DOOR TRIM	68423	5840AB-1	2 - K13
	68423	5840A -5	2 - G13
COVER (R), GARNISH-INSTRUMENT	60731A	5560 -1	2 - F 7
COVER (R), HINGE	68281	6810 -1	3 - C 5
COVER (R), HOLE-DASHBOARD INSULATOR	68624B	6860A -1	3 - L 5
	68624B	6860AA-1	3 - C 6
COVER (R), IN HANDLE	58303	5830AA-1	2 - H12
COVER (R), INNER HANDLE	58303	5830A -1	2 - C12
COVER (R), KNUCKLE	88116	5700AC-3	2 - H10
	88116	5700AB-2	2 - D10
	88116	5700AA-10	2 - I 9
	88116	5700A -5	2 - G 8
COVER (R), LINK	6824Y	6810 -1	3 - C 5
COVER (R), PASSING HOLE	51360	5103 -1	2 - L 3
COVER (R), POCKET-DOOR TRIM	68429A	5840AB-2	2 - L13
	68429A	5840A -6	2 - H13
COVER (R), QUARTER PILLAR	68633	6860A -1	3 - L 5
	68633	6860AA-1	3 - C 6
COVER (R), RETRACTOR	68632	6860A -1	3 - L 5
	68632	6860AA-1	3 - C 6
COVER (R), RETRACTOR-FRONT	68637	6860A -1	3 - L 5
	68637	6860AA-1	3 - C 6
COVER (R), SERVICE-REAR FLOOR	56940C	5390 -2	2 - D 6
	56940C	5390A -2	2 - F 6
COVER (R), SIDE	64911A	5560 -2	2 - G 7
COVER (R), SIDE NO. 2	64914	5560 -3	2 - H 7
COVER (R), T END TRIM	68882A	6840A -3	3 - H 5
COVER NO. 1, RADIATOR GRILLE	50101	5005 -1	2 - F 3
COVER NO. 2, RADIATOR GRILLE	50102B	5005 -1	2 - F 3
COVER NO. 3, RADIATOR GRILLE	50103	5005 -1	2 - F 3
COVER NO. 4, RADIATOR GRILLE	50104	5005 -1	2 - F 3
COVER NO. 5, RADIATOR GRILLE	50105	5005 -1	2 - F 3
COVER, ACTUATOR	66319A	6640 -1	2 - H16
COVER, AIR CLEANER	236731	1330B -1	1 - K 4
	236731	1330BA-1	1 - L 4
COVER, BEARING	17325	1700 -1	1 - N 6
	17325	1700A -1	1 - C 7
COVER, BLIND	17381	1700A -1	1 - C 7
	17486A	1720A -1	1 - K 7
	17486A	1720 -1	1 - J 7
COVER, BOX-BATTERY	18593	1850B -1	1 - J 8
COVER, BRACKET-DAMPER STAY	62867B	6230 -1	2 - L14
COVER, CLUTCH	16410	1600A -1	1 - M 6
	16410	1600 -1	1 - L 6
COVER, COLUMN-LOWER	60210A	5500A -1	2 - I 6
	60210A	5500 -1	2 - G 6
	60210A	5500B -1	2 - J 6
COVER, COLUMN-UPPER	60210	5500B -1	2 - J 6
	60210	5500 -1	2 - G 6
	60210	5500A -1	2 - I 6
COVER, DAMPER STAY	62605B	6230 -1	2 - L14
COVER, DIAL	88743	5700A -8	2 - J 8
	88743	5700AB-3	2 - E10
	88743	5700AA-12	2 - N 9
COVER, DIODE	67241B	6702 -1	3 - M 3
COVER, DOOR BODY	58876A	5830A -5	2 - G12
	58876A	5830AA-2	2 - I12
COVER, DUST	103051	1040BA-1	1 - H 3
	103051	1040B -1	1 - G 3
	10351	1040B -1	1 - G 3
	10351	1040BA-1	1 - H 3
	15934	1580B -1	1 - K 6
	26761	2610 -1	1 - F11
	32112	3220A -1	1 - L12
	32112	3220 -1	1 - K12
	32411	3210 -1	1 - I12
	32411	3210A -1	1 - J12
COVER, DUST-CLUTCH FORK	16214	1600 1	1 - L 6
	16214	1600A -1	1 - M 6
COVER, END	32151	3220A -1	1 - L12
COVER, FEEDER-ANTENNA	669A0	6682 2	3 - D 3
COVER, FRONT	106001	1040B -1	1 - G 3
	106001	1040BA-1	1 H 3
COVER, FRONT CLUTCH	16220	1600 -1	1 - L 6
	16220	1600A -1	1 - M 6
COVER, FUSE BLOCK	66732D	6700A -1	3 - H 3
	66732D	6700 -1	3 - G 3

ALPHABETICAL INDEX

PART NAME	D-CODE	SECTION	LOCATION
COVER, HIDEAWAY-C.D.	66AH2	6680 -4	2 - L16
COVER, HOLE	55225B	5570 -1	2 - I 7
	55225B	6610 -1	2 - M15
	56051	5390 -2	2 - D 6
	56051	5390A -2	2 - F 6
	56971	5390 -2	2 - D 6
	56971	5390A -2	2 - F 6
	67517	6750 -1	3 - K 4
COVER, HOLE-CLUSTER SWITCH	55225	5520 -1	2 - K 6
COVER, HOLE-STORAGE BOX	69771	6845 -1	3 - K 5
COVER, IGNITION COIL-LEADING	18T11	1800BA-3	1 - E 8
	18T11	1800B -3	1 - N 7
COVER, IGNITION COIL-T-1	18T11B	1800B -3	1 - N 7
	18T11B	1800BA-3	1 - E 8
COVER, IGNITION COIL-T-2	18T12B	1800BA-3	1 - E 8
	18T12B	1800B -3	1 - N 7
COVER, KNOB-HINGE	R1921	6330A -1	2 - E15
COVER, MAIN FUSE BLOCK	66761	6701 -1	3 - J 3
	66761	6701A -1	3 - K 3
	66761	6701B -1	3 - L 3
COVER, MAIN-CPU	67567A	6630 -1	2 - F16
COVER, MOTOR	76421C	6120 -1	2 - E14
COVER, MOTOR-SUNROOF	69898A	6330 -1	2 C15
COVER, OPENER-FLOOR MAT	68691E	6860A -2	3 - M 5
	68691E	6860AA-2	3 - D 6
	68691E	6860AB-1	3 - E 6
COVER, OVERHEAD CONSOLE	69872	5130 -1	2 - G 4
COVER, REAR-ALTERNATOR	18W50	1830B -1	1 - F 8
	18W50	1830BA-1	1 - G 8
	18W51	1830BA-1	1 - G 8
	18W51	1830B -1	1 - F 8
COVER, ROD	17490A	1720 -1	1 - J 7
	17490A	1720A -1	1 - K 7
COVER, SASH GUIDE	57631	5790A -1	2 - H11
COVER, SEAL	67365B	5560 -3	2 - H 7
COVER, SEAL-COWL PANEL	67365	5390A -2	2 - F 6
	67365	6730 -1	3 - I 4
COVER, SEAL-SHROUD	510G1	5100 -1	2 - K 3
COVER, SELECT LEVER	46082C	4600 -1	1 - I16
COVER, SERVICE HOLE	56639	5390 -2	2 - D 6
	56639	5390A -2	2 - F 6
	67506B	5390A -2	2 - F 6
COVER, SERVICE HOLE-CLUSTER	55423D	5520 -1	2 - K 6
COVER, SERVO	19392	1920 -1	1 L 8
COVER, SET	33049	3300B -2	1 - L13
	33049	3300A -2	1 - J13
	33049	3300 -3	1 - G13
COVER, SOUND PROOF	66942	6682 -2	3 - D 3
COVER, SPARE TIRE	68820A	6860AB-1	3 - E 6
COVER, STEERING SHAFT	32210	3210A -1	1 - J12
	32210	3210 -1	1 - I12
COVER, SUB CPU	67568A	6630 -1	2 - F16
COVER, THERMOSTAT	15172	1500B -1	1 - G 6
	15172	1500BA-1	1 - I 6
COVER, TOOL BOX	56926	5390A -2	2 - F 6
COVER TOP	19029	1910 -1	1 - K 8
COVER TOWING HOOK	56290E	5390 -2	2 - D 6
	56290E	5390A -2	2 - F 6
COVER, UNDER	17371	1700A -1	1 - C 7
	19027A	1910 -1	1 K 8
COVER UNDER CLUTCH HOUSING	16121	1600A -1	1 - M 6
COVER UNDER-FRONT	56111B	5390 -2	2 - D 6
	56111B	5390A 2	2 - F 6
COVER UNDER REAR	5611Y	5390 -2	2 - D 6
COVER VENTILATION	16146	1600 -1	1 - L 6
	16146	1600A -1	1 - M 6

PART NAME	D-CODE	SECTION	LOCATION
COVER, WHEEL CORE	32049	3200 -1	1 - H12
COVER, WIPER ARM-REAR	76641A	6750 -1	3 - K 4
COVER, WIPER MOTOR	67435A	6750 -1	3 - K 4
COWLING, FAN	15210B	1500B -2	1 - H 6
	15210B	1500BA-2	1 - J 6
COWLING, RADIATOR	15210A	1500BA-2	1 - J 6
	15210A	1500B -2	1 - H 6
CUP, FLOATING	49635	4340 -2	1 - K15
	49635	4340A -2	1 - M15
CUP, PRIMARY	49626	4340 -2	1 - K15
	49626	4340A -2	1 - M15
CUP, SECONDARY	49625	4340 -2	1 - K15
	49625	4340A -2	1 - M15
CUSHION	52451	5103 -1	2 - L 3
CUSHION (L), FRONT SEAT	88160	5700AA-11	2 - M 9
	88160	5700AC-4	2 - I10
	88160	5700AB-3	2 - E10
	88160	5700A -6	2 - H 8
CUSHION (R), FRONT SEAT	88110	5700AB-2	2 - D10
	88110	5700A -4	2 - F 8
	88110	5700AA-10	2 - L 9
	88110	5700AC-3	2 - H10
CUSHION, REAR SEAT	57200	5750AA-3	2 - E11
	57200	5750A -2	2 - K10
CUSHION, RUBBER	58612	5560 -1	2 - F 7
	58612	6845 -1	3 - K 5
	58865B	5830A -5	2 - G12
	58865B	5830AA-2	2 - I12
CYLINDER, CLUTCH MASTER	41990	4140B -1	1 - E15
CYLINDER, CLUTCH RELEASE	41920	4140B -1	1 - E15
CYLINDER, TANDEM MASTER	43990	4340 -2	1 - K15
	43990	4340A -2	1 - M15

* * * D * * *

DAM (C), AIR-SKIRT	519J1	7800 -1	3 - K 7
DAM, FRT. WINDSHIELD GLASS	63902	6300A -1	2 - N14
DAM, RR. WINDOW GLASS	70443A	6300A -1	2 - N14
DAMPER (L), FRONT	34910Z	3400 -1	1 - M13
	34910Z	3400B -1	1 - C14
	34910Z	3400A -1	1 - N13
DAMPER (R), FRONT	34910	3400B -1	1 - C14
	34910	3400A -1	1 - N13
	34910	3400 -1	1 - M13
DAMPER, PULSATION	13290C	1320BA-1	1 - I 4
	13290C	1320B -1	1 G 4
DAMPER, REAR	28700	2800A -1	1 - C12
	28700	2800B -1	1 - D12
	28700	2800 -1	1 - N11
DASH POT	20190A	1364BA-1	1 - D 5
	20190A	1364B -1	1 - C 5
DECK (L), FLOOR	56540A	5390 -2	2 - D 6
DECK (R), FLOOR	56510	5390 -2	2 - D 6
DECK, TAPE-CASSETTE	66900D	6680 -3	2 - K16
DEFLECTOR	69845	6330 -1	2 - C15
DIAL, LUMBAR SUPPORT	88342	5700AB-3	2 - E10
	88342	5700AA-12	2 - N 9
	88342	5700A -8	2 - J 8
DIAPHRAGM	13W7Y	1364B -1	1 - C 5
DIAPHRAGM, VACUUM	19823	1920 2	1 - M 8
DIFFERENTIAL	27200	2710A -1	1 - J11
	27200	2710C -1	1 - L11
DIPSTICK	10450	1030B -1	1 E 3
	10450	1030BA-1	1 - F 3
DISC CLUTCH	16460	1600A -1	1 - M 6
	16460	1600 -1	1 L 6

PART NAME	D-CODE	SECTION	LOCATION
DISC, FRICTION	79977	2710C -2	1 - M11
	79977	2710A -2	1 - K11
DISPLAY, SECURITY-ALARM	675A0	6610 -1	2 - M15
DISTRIBUTOR, FUEL	13150B	1320B -1	1 - G 4
	13150B	1320BA-1	1 - I 4
DISTRIBUTOR, OIL	19650	1940 -1	1 - H 9
DOWEL, TUBULAR	101111	1030B -1	1 - E 3
	101111	1030BA-1	1 - F 3
DRIVE & DIFFERENTIAL	27100	2710 -1	1 - H11
	27100	2710C -1	1 - L11
	27100	2710A -1	1 - J11
DRIVESHAFT	25100A	2500 -1	1 - C11
	25500	2550 -1	1 - D11
DRUM, CLUTCH	19470	1930 -1	1 - E 9
DRUM, CONNECTING	19590	1940 -1	1 - H 9
	19591	1940 -1	1 - H 9
DRUM, DIRECT	21520	1930 -2	1 - F 9
DRUM, REAR CLUTCH	19511	1930 -1	1 - E 9
DUCT 'A', AIR-FRONT	50134	5000 -1	2 - E 3
DUCT (L), AIR-BRAKE PIPE	4363XZ	4360A -1	1 - C16
	4363XZ	4360 -1	1 - N15
DUCT (L), SHOWER	64581Y	6100 -1	2 - N13
DUCT (L), SIDE DEMISTER	60181Y	5580 -1	2 - K 7
DUCT (R), AIR-BRAKE PIPE	4363X	4360 -1	1 - N15
	4363X	4360A -1	1 - C16
DUCT (R), SHOWER	64581A	6100 -1	2 - N13
DUCT (R), SIDE DEMISTER	60181A	5580 -1	2 - K 7
DUCT NO 1 (L)	64771Y	5580 -1	2 - K 7
DUCT NO 1 (L), LAP-VENTILATOR	64822Y	5580 -1	2 - K 7
DUCT NO. 1 (R)	64771A	5580 -1	2 - K 7
DUCT NO 1 (R), VENTILATOR	64822A	5580 -1	2 - K 7
DUCT NO 2 (L), LAP-VENTILATOR	64823A	5580 -1	2 - K 7
DUCT NO 2 (R), LAP VENTILATOR	64823	5580 -1	2 - K 7
DUCT, AIR	133251	1330BA-1	1 - L 4
	133251	1330B -1	1 - K 4
	61150C	6100 -1	2 - N13
DUCT AIR-RADIATOR SHROUD	56361A	5310A -1	2 - N 4
	56361A	5310 -1	2 - M 4
DUCT, CENTER	64750A	5580 -1	2 - K 7
DUCT, DEFROSTER	60131C	6100 -1	2 - N13
DUCT, FRESH AIR	13225	1330B -1	1 - K 4
	13225	1330BA-1	1 - L 4
	23615C	1330BA-1	1 - L 4
	23615C	1330B -1	1 - K 4

* * * E * * *

ELECTRIC UNIT, A B S.	437B0	4370 -2	1 - E16
ELEMENT, AIR CLEANER	23603	1330BA-1	1 - L 4
	23603	1330B -1	1 - K 4
EMBLEM, CENTER	37192B	3700A -1	1 - H14
	37192B	3700 -1	1 - E14
END, CONTROL LEVER	17461A	1720A -1	1 - K 7
	17461A	1720 -1	1 - J 7
END, S ROD (1ST & 2ND)	17410A	1720 -1	1 - J 7
	17410A	1720A -1	1 - K 7
END, S ROD (3RD & 4TH)	17422A	1720 1	1 - J 7
	17422A	1720A 1	1 - K 7
END, SHIFT	17432	1720 1	1 - K 7
	17432	1720 -1	1 J 7
ENGINE BLOCK, SHORT	23800	1000B 1	1 - C 3
	23800	1000BA-1	1 - D 3
EQUALIZER GRAPHIC	66920D	6680 3	2 K16
ESCUTCHEON	58375	5830A 2	2 D12
EYE BOLT KIT STEERING GEAR	32148	3220A 1	1 L12

ALPHABETICAL INDEX

PART NAME	D-CODE	SECTION	LOCATION
* * * F * * *			
FACE, REAR BUMPER	50221B	5010A -1	2 - G 3
FAN & FAN DRIVE	152501	1500BA-2	1 - J 6
	152501	1500B -2	1 - H 6
FAN DRIVE	152101	1500B -2	1 - H 6
	152101	1500BA-2	1 - J 6
FAN, ADDITIONAL	15035	1500B -1	1 - G 6
	15035	1500BA-1	1 - I 6
FAN, COOLING	15140	1500B -1	1 - G 6
	15140	1500BA-1	1 - I 6
	15140A	1500B -1	1 - G 6
	15140A	1500BA-1	1 - I 6
FAN, MOTOR	76424D	6120 -1	2 - E14
FASCIA, FRONT	50031B	5000 -1	2 - E 3
FASTENER	50753A	5180 -2	2 - J 4
	51081A	7800 -1	3 - K 7
	58762	5800A -1	2 - J11
	58762	5800AA-1	2 - K11
	58762A	5800A -1	2 - J11
	58772A	5800AA-1	2 - K11
	68675	6865AA-1	3 - H 6
	68855C	6865A -1	3 - G 6
	68855C	6865AA-1	3 - H 6
	68865	6865AA-1	3 - H 6
	68865	6865A -1	3 - G 6
	68865	7800 -1	3 - K 7
	68865C	6865AA-1	3 - H 6
	68865C	6865A -1	3 - G 6
	68865D	6865AA-1	3 - H 6
	68865D	6865A -1	3 - G 6
	68865E	5000 -1	2 - E 3
	68865E	6865AA-1	3 - H 6
	68865E	6865A -1	3 - G 6
	68865F	6865A -1	3 - G 6
	68865Q	6865AA-1	3 - H 6
	68885	6330A -1	2 - E15
	68885	6865AA-2	3 - I 6
	68885	6865A -1	3 - G 6
	69885C	6865AA-2	3 - I 6
	69885C	6865A -1	3 - G 6
FASTENER (L)	58763Y	5800AA-1	2 - K11
	58763Y	5800A -1	2 - J11
FASTENER (R)	58763A	5800AA-1	2 - K11
	58763A	5800A -1	2 - J11
FASTENER, AIR DAM-SKIRT	519K2	7800 -1	3 - K 7
FASTENER, COAT HANGER	69532A	6900A -5	3 - G 7
FASTENER, DOOR TRIM	68401	6865AA-1	3 - H 6
	68401	6865A -1	3 - G 6
FASTENER, DUCT PANEL	5681X	5310 -1	2 - M 4
	5681X	5310A -1	2 - N 4
FASTENER, HINGE COVER	68285	6865AA-1	3 - H 6
FASTENER, HOOD	50656	5230 -1	2 - K 4
FASTENER, REAR BUMPER	50233C	5000 -1	2 - E 3
FASTENER SEAL	68866C	6865AA-1	3 - H 6
	68866C	6865A -1	3 - G 6
	68866E	5840A -7	2 - I13
	68866E	5840AB-3	2 - M13
	68866E	6865A -1	3 - G 6
	68866E	6865AA-1	3 - H 6
	68866F	5830A -5	2 - G12
	68866F	5830AA-2	2 - I12
	68866F	6865A -1	3 - G 6
	68866F	6865AA-1	3 - H 6
	68866J	6865A -1	3 - G 6
	68866J	6865AA-1	3 - H 6
FASTENER, TAPPING	688C1	6860AB-1	3 - E 6
FASTENER, TIRE COVER	68812	6865AA-1	3 - H 6
FASTENER, TRIM-SUNROOF	69897B	6330 -1	2 - C15
FASTENER, TURN-SIDE LID	68852	6855AA-1	3 - H 6
FASTNER, TURN-SIDE LID	68852	6865A -1	3 - G 6
FEEDER & COVER	66940A	6682 -2	3 - D 3
FEEDER-ANTENNA	66935	6682 -2	3 - D 3
FILM, PA 'EL-NO 1	61C05	6115 -1	2 - D14
FILTER, FUEL	13480	1320BA-1	1 - I 4
	13480	1320B -1	1 - G 4
FILTER, FUEL PUMP	13ZE1	1320BA-2	1 - J 4
	13ZE1	1320B -2	1 - H 4
FILTER, WASHER TANK-FRONT	674C7	6720 -2	3 - H 4
FILTER, WASHER, REAR	50850	5180 -2	2 - J 4
FLANGE	19580	1940 -1	1 - H 9
FLANGE, COMPANION	27020	2710C -1	1 - L11
	27020	2710A -1	1 - J11
	27020	2710 -1	1 - H11
FLANGE, DRIVE	19581	1940 -1	1 - H 9
FLANGE, REAR AXLE	26241	2600 -1	1 - E11
FLYWHEEL	11500	1100BA-1	1 - J 3
	11500	1100B -1	1 - I 3
FOAM (L), ENERGY ABSORBER-FRONT BUMPER	50112A	5000 -1	2 - E 3
FOAM (L), ENERGY ABSORBER-REAR BUMPER	50224E	5010A -1	2 - G 3
FOAM (R), ENERGY ABSORBER-FRONT BUMPER	50111B	5000 -1	2 - E 3
FOAM (R), ENERGY ABSORBER-REAR BUMPER	50223C	5010A -1	2 - G 3
FORK, BRAKE	43140	4300 -1	1 - H15
FORK, CLUTCH	41140	4300 -1	1 - H15
FORK, CLUTCH RELEASE	16520	1600 -1	1 - L 6
	16520	1600A -1	1 - M 6
FORK, SHIFT	17406	1720A -1	1 - K 7
	17406	1720 -1	1 - J 7
FORK, SHIFT (1ST & 2ND)	17402	1720 -1	1 - J 7
	17402	1720A -1	1 - K 7
FORK, SHIFT (3RD & 4TH)	17404	1720 -1	1 - J 7
	17404	1720A -1	1 - K 7
FRAME (L), LAMP LID	51512Z	5103 -1	2 - L 3
FRAME (L), REAR SIDE	54810	5370A -2	2 - N 5
	54810	5370 -1	2 - L 5
FRAME (L), REAR SIDE-UPPER	5481X	5370A -2	2 - N 5
FRAME (L), SIDE-FRONT	54300	5320 -1	2 - C 5
	54300	5320B -1	2 - D 5
FRAME (L), SIDE-OUTER	71200	5340A -2	2 - G 5
FRAME (R), LAMP LID	51512	5103 -1	2 - L 3
FRAME (R), REAR SIDE	53810	5370 -1	2 - L 5
	53810	5370A -1	2 - M 5
FRAME (R), REAR SIDE-UPPER	5381X	5370A -1	2 - M 5
FRAME (R), SIDE-FRONT	53300	5320B -1	2 - D 5
	53300	5320 -1	2 - C 5
FRAME (R), SIDE-OUTER	70200A	5340A -1	2 - F 5
FRAME (RR., L), FRONT	54660	5370A -1	2 - M 5
	54660	5370 -1	2 - L 5
FRAME (RR., R), FRONT	53660	5370 -1	2 - L 5
	53660	5370A -1	2 - M 5
FRAME, BACK WINDOW	R1500	6330A -1	2 - E15
FRAME, GLASS HATCH	62020B	6200 -1	2 - K14
FRAME, INSTRUMENT	60420A	5560 -1	2 - F 7
FRAME, INSTRUMENT PANEL	60410	5560 -1	2 - F 7
FRAME, SLIDING SUNROOF ROOF	69840A	6330 -1	2 - C15
FRAME, SUB	28800	2830 -1	1 - F12
FUSE (10A)	66495	6700A -1	3 - H 3
	66495	6700 -1	3 - G 3
FUSE (15A)	66496	6700A -1	3 - H 3
	66496	6700 -1	3 - G 3
FUSE (20A)	66497	6700A -1	3 - H 3
	66497	6700 -1	3 - G 3
FUSE (30A)	66136	6700B -1	3 - I 3
	66136	6701A -1	3 - K 3
	66136	6701 -1	3 - J 3
	66136	6701B -1	3 - L 3
	66497B	6700A -1	3 - H 3
	66497B	6700 -1	3 - G 3
FUSE (40A)	66136A	6700B -1	3 - I 3
	66136A	6701B -1	3 - L 3
	66136A	6701A -1	3 - K 3
	66136A	6701 -1	3 - J 3
FUSE (7.5A)	66136C	6700A -1	3 - H 3
	66136C	6700 -1	3 - G 3
FUSE (80A)	66136B	6700B -1	3 - I 3
	66136B	6701 -1	3 - J 3
	66136B	6701B -1	3 - L 3
	66136B	6701A -1	3 - K 3
* * * G * * *			
GARNISH (L), DOOR	68441Z	5840AB-2	2 - L13
GARNISH (L), SAIL-INNER	69111Y	6900A -2	3 - D 7
GARNISH (R), DOOR	68441	5840AB-2	2 - L13
GARNISH (R), SAIL-INNER	69111A	6900A -2	3 - D 7
GARNISH, TAIL PIPE	40981A	4000BA-2	1 - D15
	40981A	4000B -2	1 - M14
GARNISH, TOP-FRONT	68021F	6800A -1	3 - M 4
GARNISH, TOP-REAR	68022D	6800A -1	3 - M 4
GARNISH, UPPER	60720	5560 -1	2 - F 7
GASKET	13135C	1300B -1	1 - M 3
	131711	1380B -3	1 - I 5
	13211	1330BA-1	1 - L 4
	13211	1330B -1	1 - K 4
	13265	1320B -1	1 - G 4
	13265	1320BA-1	1 - I 4
	13291	1320B -1	1 - G 4
	13291	1320BA-1	1 - I 4
	13483A	1310BA-2	1 E 4
	13483A	1320BA-1	1 - I 4
	13483A	1320B -1	1 - G 4
	13541	1350BA-1	1 - N 4
	13541	1350B -1	1 - M 4
	136051	1310BA-2	1 - E 4
	13655A	1380BA-3	1 - M 5
	13761	1310BA-2	1 - E 4
	13761	1320BA-1	1 - I 4
	13761	1380BA-3	1 - M 5
	13761	1380B -3	1 - I 5
	13761	4000BA-1	1 - C15
	13W89	1364B -1	1 - C 5
	13W89	1364BA-1	1 - D 5
	148231	1500BA-1	1 - I 6
	148231	1500B -1	1 - G 6
	15081	1500BA-1	1 - I 6
	15081	1500B -1	1 - G 6
	15162	1500BA-1	1 - I 6
	15162	1500B -1	1 - G 6
	15611	6600BA-2	2 - K15
	15611	6600B -2	2 - H15
	19396A	1920 -1	1 - L 8
	24760A	1840B -1	1 - H 8
	24760A	1840BA 1	1 I 8
	40078	4000B -1	1 - L14
	40078	4000BA-1	1 - C15
	40305	4000BA-1	1 - C15

ALPHABETICAL INDEX

PART NAME	D-CODE	SECTION	LOCATION
GASKET	40305	4000B -1	1 - L14
	40375	4000BA-1	1 - C15
	40375	4000B -1	1 - L14
	41443	4300 -1	1 - H15
	50975	5060A -1	2 - J 3
	87845A	6750 -1	3 - K 4
	99560	1040B -1	1 - G 3
	99560	1040BA-1	1 - H 3
	99560	6600BA-3	2 - L15
	99560	6600B -3	2 - I15
GASKET & SEAL KIT	22900	1960 -1	1 - J 9
GASKET 'A', REAR BUMPER	50321	5010A -1	2 - G 3
GASKET 'B', REAR BUMPER	50322	5010A -1	2 - G 3
GASKET (L)	64728Y	5580 -1	2 - K 7
GASKET (R)	64728A	5580 -1	2 - K 7
GASKET KIT		6142A -1	2 - I14
GASKET SET, ENGINE	10271S	1000BA-1	1 - D 3
	10271S	1000B -1	1 - C 3
GASKET SET, SUB-ENGINE	13111S	1000BA-1	1 - D 3
	13111S	1000B -1	1 - C 3
GASKET, AIR CONTROL VALVE	137241	1371BA-1	1 - F 5
	137241	1371B -1	1 - E 5
GASKET, BLIND COVER	17385	1700A -1	1 - C 7
GASKET, DRUM SUPPORT	21253	1920 -2	1 - M 8
GASKET, E.G.R VALVE	20305A	1380B -3	1 - I 5
	20305A	1380BA-3	1 - M 5
GASKET, EXHAUST MANIFOLD	13462	1310B -1	1 - C 4
	13462	1310BA-2	1 - E 4
GASKET, EXHAUST PIPE	13483	4000BA-1	1 - C15
GASKET, EXHAUST PIPE-CONVERTER	20305	4000BA-1	1 - C15
	20305	4000B -1	1 - L14
GASKET, EXTENSION	19735	1920 -2	1 - M 8
GASKET, FILLER PIPE	42241	4200 -1	1 - G15
GASKET, FRONT COMBINATION	51062A	5105 -1	2 - M 3
GASKET, FRONT COVER	10641	1040B -1	1 - G 3
	10641	1040BA-1	1 - H 3
	16225	1600 -1	1 - L 6
GASKET, HINGE-LIFT GATE	62212	6230 -1	2 - L14
GASKET, INTAKE MANIFOLD	13111	1300BA-1	1 - N 3
	13111	1300B -1	1 - M 3
GASKET, KEY CYLINDER	62493A	0900A -1	2 - C 3
GASKET, LICENSE	51273A	5120 -1	2 - E 4
GASKET, LICENSE LAMP	51273G	5120 -1	2 - E 4
GASKET, METERING OIL	146111	1400BA-1	1 - E 6
	146111	1400B -1	1 - C 6
GASKET, O DRIVE CASE	21322	1920 2	1 - M 8
GASKET, OIL CAP	102521	1030B -1	1 - E 3
	102521	1030BA 1	1 - F 3
GASKET, OIL FILLER PIPE	10424	1030BA-1	1 F 3
GASKET, OIL OUTLET PIPE	14264D	1040BA-1	1 - H 3
GASKET, OIL PAN	10431	1040B 1	1 - G 3
	10431	1040BA-1	1 - H 3
	19835	1920 -2	1 - M 8
GASKET, OIL PIPE	136311	1310BA-2	1 - E 4
	136381	1310BA-2	1 - E 4
GASKET, OIL PUMP	19215	1910 -1	1 - K 8
GASKET, OIL STRAINER	141711	1400BA-1	1 - E 6
	141711	1400B -1	1 - C 6
GASKET, REAR COMBINATION	51164A	5110A -1	2 - C 4
GASKET REAR SIDE TURN	51562	5120 -1	2 - E 4
GASKET, RESOLUTION CHAMBER	13116B	1300BA-1	1 - N 3
	13116B	1300B 1	1 - M 3
GASKET, SEAL	50285	5010A -1	2 G 3
GASKET, SPRING CAP	17475A	1720 -1	1 J 7
	17475A	1720A 1	1 K 7
GASKET STOP LAMP-HIGH MOUNTED	51582	5110A -1	2 C 4

PART NAME	D-CODE	SECTION	LOCATION
GASKET, THERMOSTAT COVER	15173	1500BA-1	1 - I 6
	15173	1500B -1	1 - G 6
GASKET UNDER COVER	17375	1700A -1	1 C 7
GASKET VACUUM POWER ASSIST	43443	4340 -2	1 - K15
	43443	4340A -2	1 - M15
GASKET, VAPOR VALVE	42985	4200 -1	1 - G15
GASKET, WATER DRAIN	10323A	1030BA-1	1 - F 3
	10323A	1030B -1	1 - E 3
GASKET, WATER PUMP	15116	1500BA-1	1 - I 6
	15116	1500B -1	1 - G 6
GAUGE UNIT, OIL PRESSURE	148201	6600BA-2	2 - K15
	148201	6600B -2	2 - H15
GAUGE, FUEL TANK	60960A	4200 -1	1 - G15
GAUGE OIL LEVEL	19880	1920 -	1 - M 8
GEAR	24746	1840B -1	1 - H 8
	24746	1840BA-1	1 - I 8
GEAR SET, FINAL	27110	2710A -1	1 - J11
	27110	2710C -1	1 - L11
	27110	2710 -1	1 - H11
GEAR, 1ST	17271	1710A 1	1 - G 7
	17271	1710 -1	1 - D 7
GEAR, 2ND	17250	1710 -1	1 - D 7
	17250	1710A -1	1 - G 7
GEAR, 3RD	17230	1710A -1	1 - G 7
	17230	1710 -1	1 - D 7
GEAR, COUNTER	17308	1710 -2	1 - D 7
	17308	1710A -2	1 H 7
GEAR, COUNTER REVERSE	17302	1710A -2	1 H 7
	17302	1710 -1	1 - D 7
GEAR, COUNTER SHAFT	17301	1710A -1	1 - G 7
	17301	1710 -1	1 - D 7
GEAR, DIFFERENTIAL SIDE	27251	2710 -1	1 - H11
	27251	2710A -1	1 - J11
	27251	2710C -1	1 - L11
GEAR, DRIVE	115311	1100B -1	1 - I 3
	115311	1100BA-1	1 - J 3
GEAR, DRIVE-OIL PUMP	115511	1100BA-1	1 - J 3
	115511	1100B -1	1 - I 3
GEAR, DRIVEN	146251	1400B -1	1 - C 6
	146251	1400BA-1	1 - E 6
	17441	1700A -1	1 - C 7
	17441	1700 -1	1 - N 6
	17441	1920 -1	1 - L 8
GEAR, FRICTION	17302A	1710A -2	1 H 7
	17302A	1710 -2	1 - E 7
	17304A	1710A -2	1 - H 7
GEAR, INTERNAL	19533	1930 -2	1 - F 9
	19533	1940 -1	1 - H 9
	19533B	1930 -2	1 - F 9
GEAR, INTERNAL-STARTER	18X56	1840B -1	1 - H 8
	18X56	1840BA-1	1 - I 8
GEAR, MAIN DRIVE	17201	1710 -1	1 - D 7
	17201	1710A -1	1 - G 7
GEAR, OVERDRIVE	21560	1930 -2	1 - F 9
GEAR, OVERTOP	17611	1710 -2	1 - E 7
	17611	1710A -2	1 - H 7
GEAR, REVERSE	17281	1710 1	1 - D 7
	17281	1710A 1	1 - G 7
GEAR, REVERSE IDLE	17310	1710 -2	1 E 7
	17310	1710A 2	1 H 7
GEAR, RING-FLYWHEEL	11502	1100BA-1	1 J 3
	11502	1100B 1	1 I 3
GEAR SHAFT	76661	6740 1	3 J 4
GEAR, SPEEDOMETER DRIVE	17341A	1710 2	1 E 7
	17341A	1710A 2	1 H 7
	17341A	1940 1	1 H 9

PART NAME	D-CODE	SECTION	LOCATION
GEAR, STATIONARY-F.I.	105001	1030B -1	1 - E 3
	105001	1030BA-1	1 - F 3
GEAR, STATIONARY-RR	105501	1030BA-1	1 - F 3
	105501	1030B -1	1 - E 3
GEAR, STEERING	32110	3220 -1	1 - K12
	32110	3220A -1	1 - L12
GEAR, SUN	19560	1930 -2	1 - F 9
GLASS (L), DOOR FRONT	58500Z	5800AA-1	2 - K11
	58500Z	5800A -1	2 - J11
GLASS (L), MIRROR	69140Y	6900A -3	3 - E 7
GLASS (L), QUARTER-FRONT DOOR	58661X	5800AA-1	2 - K11
GLASS (R), DOOR-FRONT	58500	5800AA-1	2 - K11
	58500	5800A -1	2 - J11
GLASS (R), MIRROR	69140A	6900A -3	3 - E 7
GLASS (R), QUARTER-FRONT DOOR	58661B	5800AA-1	2 - K11
GLASS, BACK WINDOW	63931	6300A -1	2 - N14
GLASS, FRONT-WARNING UNIT	55447A	5500A -1	2 - I 6
	55447A	5500 -1	2 - G 6
	55447A	5500B -1	2 - J 6
GLASS, WINDSHIELD	63901	6300A -1	2 - N14
GOVERNOR	19660	1940 -1	1 - H 9
GRILLE (L), DEFROSTER NOZZLE	60785Z	5560 -2	2 - G 7
GRILLE (L), DEMISTER	60161Z	5580 -1	2 - K 7
GRILLE (L), EXTRACTOR	51910Z	5180 -2	2 - J 4
GRILLE (L), SPEAKER	55510X	5560 -1	2 - F 7
GRILLE (L), VENT-DOOR TRIM	6844X	5840A -6	2 - H13
	6844XZ	5840AB-2	2 - L13
GRILLE (R), COWL-LOWER	507P1A	5180 -2	2 - J 4
GRILLE (R), DEFROSTER NOZZLE	60785	5560 -2	2 - G 7
GRILLE (R), DEMISTER	60161	5580 -1	2 - K 7
GRILLE (R), EXTRACTOR	51910	5180 -2	2 - J 4
GRILLE (R), SPEAKER-T. TRIM	68868A	6840A -3	3 - H 5
	68868Y	6840A -3	3 - H 5
GRILLE (R), VENT-DOOR TRIM	6844X	5840AB-2	2 - L13
GRILLE, COWL	50791	5180 -2	2 - J 4
GRILLE, EXTRACT	68864C	6860A -3	3 - N 5
	68864C	6860AA-2	3 - D 6
GRILLE, SPEAKER-DOOR TRIM	6842X	5840AB-2	2 - L13
	6842X	5840A -6	2 - H13
GROMMET		6132A -1	2 - G14
		6132A -1	2 - G14
	13252	1320BA-1	1 - I 4
	13252	1320B -1	1 - G 4
	43095	5390 -2	2 - D 6
	61479	6100 -1	2 - N13
	61861A	6330A -1	2 - E15
	66971K	5390A -2	2 - F 6
	66971K	5390 -2	2 D 6
	67012D	5390 -2	2 - D 6
	67012D	5390A -2	2 - F 6
GROMMET, KNOB-METER SET	55437A	5540A -1	2 - C 7
	55437A	5540 -1	2 - M 6
	55437A	5540B -1	2 - E 7
GROMMET, SCREW	45512A	5030A -1	2 - H 3
	50754G	5180 -2	2 - J 4
	50841B	5180 -2	2 - J 4
	50841G	5180 -2	2 J 4
	509V2	5180 -2	2 - J 4
	51029	5100 -1	2 K 3
	51962	7800 1	3 K 7
	58502C	5800A -1	2 - J11
	68037A	5840AB-1	2 K13
	68037A	5840A -1	2 - C13
	68155	6820A 1	3 - D 5
	68402	5840AB-1	2 - K13
	68402	5840A -1	2 - C13

ALPHABETICAL INDEX

PART NAME	D-CODE	SECTION	LOCATION
GROMMET, SCREW	68402B	6820A -1	3 - D 5
	68402B	7250 -1	3 - J 7
	68719	6820A -1	3 - D 5
	68719	6840A -1	3 - F 5
	68719	6840AB-1	3 - J 5
	68719	7250 -1	3 - J 7
	69361	5840AB-3	2 - M13
	69361	5840A -7	2 - I13
GROMMET, SCREW-FRONT WINDOW MLDG.	506A8	5030A -1	2 - H 3
GROMMET, SCREW-QTR. TRIM	68201	6810 -1	3 - C 5
GROMMET, SCREW-REAR COMBINATION	51146	5110A -1	2 - C 4
GROMMET, SCREW-REAR SPOILER	51963B	7800 -1	3 - K 7
GROMMET, SCREW-SIDE SPOILER 'A'	519B4	7800 -1	3 - K 7
GROMMET, SCREW-SIDE SPOILER 'B'	519B5	7800 -1	3 - K 7
GROMMET, SCREW-SIDE SPOILER 'C'	519B3	7800 -1	3 - K 7
GROMMET, SCREW-T-SIDE TRIM	68853A	6810 -1	3 - C 5
	68853A	6840A -1	3 - F 5
GROMMET, WASHER TANK	51814A	6720 -2	3 - H 4
GUARD (L), MUD	56115	5320B -1	2 - D 5
	56115	5320 -1	2 - C 5
GUARD (R), MUD	56114	5320B -1	2 - D 5
	56114	5320 -1	2 - C 5
GUARD, HARNESS-FRONT	68678F	6860AA-1	3 - C 6
	68678F	6860A -2	3 - M 5
	68678F	6860AB-1	3 - E 6
GUIDE 'A' (L), GLASS	58601Z	5800A -1	2 - J11
GUIDE 'A' (R), GLASS	58601	5800A -1	2 - J11
GUIDE 'B' (L), GLASS	58602Z	5800A -1	2 - J11
	58602Z	5800AA-1	2 - K11
GUIDE 'B' (R), GLASS	58602	5800AA-1	2 - K11
	58602	5800A -1	2 - J11
GUIDE (L), REAR	69842Z	6330 -1	2 - C15
GUIDE (L), REGULATOR-POWER WINDOW	58590Y	5830A -4	2 - F12
GUIDE (R), REAR	69842	6330 -1	2 - C15
GUIDE (R), REGULATOR-POWER WINDOW	58590A	5830A -4	2 - F12
GUIDE, OIL	17550	1700A -1	1 - C 7
GUIDE, POLE-NO. 1	88141C	5700AC 4	2 - I10
GUSSET (L), CROSS MEMBER NO 1	53021Y	5310A -1	2 - N 4
GUSSET (L), HINGE PILLAR	71235	5340AA-2	2 - I 5
GUSSET (L), INSTRUMENT PANEL-DASH	71654	5340AA-2	2 - I 5
GUSSET (L), INSTRUNENT PANEL-DASH	70654	5340AA-2	2 - I 5
GUSSET (L), LOCK TOWER	54895	5370 -1	2 - L 5
GUSSET (L), WHEEL HOUSE	71690	5340AA-2	2 - I 5
GUSSET (R), CROSS MEMBER NO 1	53021A	5310A -1	2 - N 4
GUSSET (R), HINGE PILLAR	70235	5340AA-1	2 - H 5
GUSSET (R), LOCK TOWER	53895	5370 -1	2 - L 5
GUSSET (R), WHEEL HOUSE	70690	5340AA-2	2 - I 5
GUSSET, FRONT FLOOR	56780	5370A -2	2 - N 5
GUSSET, FRONT FLOOR PAN	5398X	5370A -1	2 - M 5
* * * H * * *			
HANDLE (L), INNER	58321Z	5830A -1	2 - C12
	58321Z	5830AA-1	2 - H12
HANDLE (L), OUTER	58420Z	5830AA-1	2 - H12
	58420Z	5830A -2	2 - D12
HANDLE (R), INNER	58321	5830AA-1	2 - H12
	58321	5830A -1	2 - C12
HANDLE (R), OUTER	58420	5830A -2	2 - D12
	58420	5830AA-1	2 - H12
HANDLE, JACK	68810A	3700 -3	1 - G14
	68810A	3700A -2	1 - I14
HANDLE, REGULATOR	58370	5830A -2	2 - D12
	58370	5830A -1	2 - C12
HANDLE, SUNROOF	69855	6330 -1	2 - C15
HANGER, COAT	69941	6900A -5	3 - G 7
HANGER, ENGINE	108611	1040B -1	1 - G 3
	108621	1040B -1	1 - G 3
HANGER, ENGINE REAR	10561B	1040BA-1	1 - H 3
HANGER, SILENCER	40060A	4000BA-1	1 - C15
	40060A	4000B -1	1 - L14
	40061	4000BA-1	1 - C15
	40061	4000B -1	1 - L14
	40160	4000BA-1	1 - C15
	40160	4000B -1	1 - L14
HARNESS (L), ILLUM. & SWITCH	59496A	5830AA-2	2 - I12
	59496A	5830A -5	2 - G12
HARNESS NO. 1, REAR	67050A	6700A -1	3 - H 3
	67050A	6700 -1	3 - G 3
HARNESS NO 2, REAR	67060	6700 -1	3 - G 3
	67060	6700A -1	3 - H 3
HARNESS NO 3, REAR	6706Y	6700B -1	3 - I 3
HARNESS, BLOWER UNIT	61B16	6120 -1	2 - E14
HARNESS, ENGINE	67070	6701 -1	3 - J 3
	67070	6701A -1	3 - K 3
	67070	6701B -1	3 - L 3
HARNESS, FRONT	67010A	6700A -1	3 - H 3
	67010A	6700 -1	3 - G 3
	67010A	6700B -1	3 - I 3
HARNESS, INSTRUMENT	67030	6702A -1	3 - N 3
	67030	6702B -1	3 - C 4
	67030	6702 -1	3 - M 3
HARNESS, INTERIOR LAMP	67100	6700B -1	3 - I 3
	67100	6700A -1	3 - H 3
	67100	6700 -1	3 - G 3
HARNESS, KEY ILLUMINATION	58496	5830A -4	2 - F12
	58496	5830AA-2	2 - I12
HARNESS, LIGHT-CLUSTER SWITCH	66167B	6612 -1	2 - C16
HARNESS, REAR	67050	6700A -1	3 - H 3
	67050	6700B -1	3 - I 3
	67050	6700 -1	3 - G 3
HARNESS, SELECTOR LEVER	46216	4600 -1	1 - I16
HARNESS, SUNROOF	69858A	6330 -1	2 - C15
HARNESS, WIPER-CLUSTER SWITCH	66166B	6612 -1	2 - C16
HARNESS, WIRE		6132A -1	2 - G14
		6152A -1	2 - J14
HEAD, CYLINDER		6142A 1	2 - I14
HEADER, FRONT	70640	5360A -1	2 - K 5
HEADER, FRONT-INNER	70640A	5340AA-2	2 - I 5
HEADER FRONT-OUTER	70A30	5340AA-2	2 - I 5
HEADER, REAR	70700	5360A -1	2 - K 5
HEATER UNIT	61130	6100 -1	2 - N13
HIDEAWAY, C.D	669H0	6680 -3	2 - K14
HINGE	64470	5570 -2	2 J 7
	V0634	7900 -1	3 - L 7
HINGE (L), DOOR-LOWER	58240Z	5800AA-1	2 - K11
	58240Z	5800A -1	2 - J11
HINGE (L), DOOR-UPPER	58210Z	5800AA-1	2 - K11
	58210Z	5800A -1	2 - J11
HINGE (L), HOOD	52460	5230 -1	2 K 4
HINGE (L), LID-LAMP	51430Y	5103 -1	2 - L 3
HINGE (L), REAR BACK	57560	5750AA-4	2 - F11
	57560	5750A -2	2 K10
HINGE (L), TRUNK LID	52720	5260 -1	2 L 4
HINGE (R), DOOR-LOWER	58240	5800AA-1	2 - K11
	58240	5800A -1	2 J11
HINGE (R), DOOR-UPPER	58210	5800AA-1	2 K11
	58210	5800A -1	2 J11
HINGE (R), HOOD	52410	5230 -1	2 K 4
HINGE (R), LID-LAMP	51430A	5103 -1	2 - L 3
HINGE (R), REAR BACK	57550	5750AA-4	2 - F11
	57550	5750A -2	2 - K10
HINGE (R), TRUNK LID	52710	5260 -1	2 - L 4
HINGE NO 1, STORAGE BOX	69774	6845 -1	3 - K 5
HINGE NO. 2, STORAGE BOX	69775	6845 -1	3 - K 5
HINGE, GLASS HATCH	62210C	6230 -1	2 - L14
HOLDER 'A'	45912D	4500B -1	1 G16
	45912D	4500BA-1	1 - H16
HOLDER 'B', PIPE	45920A	4500BA-1	1 - H16
	45920A	4500B -1	1 - G16
HOLDER 'C', PIPE	45930	4500B -1	1 - G16
HOLDER 'D', PIPE	45980	4500B -1	1 - G16
	45980	4500BA-1	1 - H16
HOLDER 'G', PIPE	45970	4500B -1	1 - G16
HOLDER 'J' PIPE	45963	4500B -1	1 - G16
HOLDER 'K', PIPE-FUEL	45990	4500B -1	1 - G16
	45990	4500BA-1	1 - H16
HOLDER (L), MOTOR-REGULATOR	59583	5830A -5	2 - G12
HOLDER (LWR.), ROD-INNER HANDLE	58309C	5830AA-1	2 - H12
	58309C	5830A -1	2 - C12
HOLDER (R), MOTOR-REGULATOR	58583B	5830A -4	2 - F12
HOLDER (UP.), ROD-INNER HANDLE	58309B	5830AA-1	2 - H12
	58309B	5830A -1	2 - C12
HOLDER, BRUSH	24750	1840B -1	1 - H 8
	24750	1840BA-1	1 - I 8
HOLDER CLUTCH	41360	4140B -1	1 - E15
HOLDER, FUSE	66740	6700 -1	3 - G 3
	66740	6700A -1	3 - H 3
HOLDER, HOOD STAY	52518	5230 -1	2 - K 4
HOLDER, HOOD STAY-SHROUD	52514A	5230 -1	2 - K 4
HOLDER, JACK HANDLE	56176	3700 -3	1 - G14
	56176	3700A -2	1 - I14
	56176	5530 -1	2 - L 6
HOLDER, KEY CYLINDER	60261A	5500B -1	2 - J 6
	60261A	5500A -1	2 - I 6
	60261A	5500 -2	2 - H 6
HOLDER LICENSE PLATE	50030	5000 -1	2 - E 3
HOLDER, P B V	43750A	4340 -2	1 - K15
	43750A	4340A -2	1 M15
HOLDER PIN	69247	6900A -4	3 - F 7
HOLDER, PIPE	45910E	4500B -1	1 - G16
	45910E	4500BA-1	1 - H16
	45914	4500BA-1	1 - H16
	45914	4500B -1	1 - G16
	45915A	4500B -1	1 - G16
	45915A	4500BA-1	1 - H16
	45915B	4500BA-1	1 - H16
	45916	4360 -1	1 - N15
	45916	4360A -1	1 - C16
	45916C	4360A -1	1 - C16
	45940	4500B -1	1 - G16
	45940	4500BA-1	1 - H16
HOLDER, PIPE-FRONT BRAKE (L)	45964	4360A -1	1 - C16
HOLDER STEERING GEAR	32154A	3220A -1	1 - L12
HOOD	52310	5230 -1	2 - K 4
HOOD METER & CLUSTER SWITCH	55420	5520 -1	2 - K 6
HOOD, OUTER SOFT TOP	R1210A	6330A -1	2 - E15
HOOK 'A' HOOD	R1914	6330A -1	2 - E15
HOOK 'A' HOOD COVER-REAR	R1951	6860AB-2	3 F 6
HOOK 'B' HOOD	R1915	6330A -1	2 E15
HOOK (L), REAR	56280A	5390A -2	2 F 6
	56280A	5390 -2	2 - D 6
HOOK (L), TIE DOWN FRONT	56360	5320 1	2 - C 5
	56360	5320B 1	2 D 5
HOOK (R) REAR	56260	5390A -2	2 F 6
	56260	5390 2	2 - D 6
HOOK (R) TIE DOWN-FRONT	56340A	5320B 1	2 D 5

ALPHABETICAL INDEX

PART NAME	D-CODE	SECTION	LOCATION
HOOK (R), TIE DOWN-FRONT	56340A	5320 -1	2 - C 5
HOOK, GLOVE LID	64092B	5560 -2	2 - G 7
HOOK, SCREW-QTR. TRIM	R1954A	7250 1	3 - J 7
	R1956	7250 -1	3 - J 7
HOOK, TOWING	56320D	5390A -2	2 - F 6
	56320D	5390 -2	2 - D 6
HORN, HIGH TONE	66780A	6635 -1	2 - G16
HORN, LOW TONE	66790	6635 -1	2 - G16
HOSE	135271	1350BA-1	1 - N 4
	135271	1350B 1	1 - M 4
	935104	1320BA-2	1 - J 4
	935104	1320B -2	1 - H 4
	935104	1380B -4	1 - J 5
	935104	1380BA-4	1 - N 5
	935104	6600BA-3	2 - L15
	935104	6600B -3	2 - L15
	935106	1380BA-4	1 - N 5
	935106	4200 -1	1 - G15
	935108	1320B -2	1 - H 4
	935108	1320BA-2	1 - J 4
	935108	1380B -4	1 - J 5
	935108	1380BA-4	1 - N 5
	935808	4500B -1	1 - G16
	935808	4500BA-1	1 - H16
HOSE 'A', WASHER	67501B	6720 -2	3 - H 4
HOSE 'B', WASHER	67503	6720 -2	3 - H 4
HOSE 'C', WASHER	67504	6720 -2	3 - H 4
HOSE ASSEMBLY, FLEXIBLE		6132A -2	2 - H14
HOSE NO. 1, FLEXIBLE	43810A	4360A -1	1 - C16
	43810A	4360 -1	1 - N15
HOSE NO. 1, WATER	61211	6100 -1	2 - N13
HOSE NO. 2, RETURN	32482	3220A -1	1 - L12
HOSE NO. 2, WATER	61212	6100 -1	2 - N13
HOSE NO. 3, WATER	61213	6100 -1	2 - N13
HOSE, AIR	13583	1380BA-3	1 - M 5
	13583	1380B -3	1 - L 5
	13584	1380BA-3	1 - M 5
	13584	1380B -3	1 - L 5
	13707	1380B -3	1 - L 5
	137181	1371BA-1	1 - F 5
	137181	1371B -1	1 - F 5
	137251	1330BA-1	1 - L 4
	137251	1330B -1	1 - K 4
	13755A	1380BA-3	1 - M 5
	137621	1380BA-3	1 - M 5
	13766	1380B -3	1 - L 5
	13772	1380BA-3	1 - M 5
	13772	1380B -3	1 - L 5
	40728	4000B -1	1 - L14
	40728	4000BA-1	1 - C15
HOSE, AIR INTAKE	133242	1330B -1	1 K 4
HOSE, AIR-A B S V & SURGE	13765	1380B -3	1 - L 5
HOSE AIR-A B S V & SURGE TANK	13765	1330BA-1	1 - L 4
HOSE AIR-A B V & AIR CLEANER	13752	1380BA-3	1 M 5
HOSE, AIR-A C V & VACUUM PIPE	20344A	1380BA-4	1 N 5
HOSE AIR-BY-PASS	13773	1330B 1	1 K 4
HOSE AIR-EXHAUST MANIFOLD	13752A	1380BA-3	1 - M 5
HOSE BREATHER	42581	4200 -1	1 G15
	42562	4200 1	1 G15
HOSE, DEFROSTER	61251	6100 -1	2 N13
	61252	6100 1	2 N13
HOSE DRAIN		6152A 1	2 J14
HOSE, DRAIN REAR	74030L	6330 2	2 D15
HOSE DRAIN-SUNROOF FRONT	69891A	6630 1	2 C15
HOSE EVAPORATION	42561B	4200 1	1 G15
HOSE FLEXIBLE	41380	4140B -1	1 E15

PART NAME	D-CODE	SECTION	LOCATION
	43810	4360 -1	1 - N15
	43810	4360A -1	1 - C16
	43980	4360 -1	1 - N15
HOSE, FLUID-START FLUID	13A64	1350BA-1	1 - N 4
	13A64	1350B -1	1 - M 4
HOSE, FUEL	13432	1320B -1	1 - G 4
	13432	1320BA-1	1 - I 4
	13496	1320B -1	1 - G 4
	13496	1320BA-1	1 - I 4
	13497	1320B -1	1 - G 4
	13497	4500B -1	1 - G16
	13497	4500BA-1	1 - H16
	45125	1320B -2	1 - H 4
	935105	4500B -1	1 - G16
	935105	4500BA-1	1 - H16
HOSE, FUEL MAIN	13421	1320BA-1	1 - I 4
	13421	1320B -1	1 - G 4
	13421	4500B -1	1 G16
	45128	4500BA-1	1 - H16
	45128	4500B -1	1 - G16
HOSE JOINT-FILLER PIPE	42240A	4200 -1	1 - G15
HOSE JOINT-FUEL TANK SIDE	42247	4200 -1	1 - G15
HOSE, OIL	147102	1500BA-1	1 - I 6
	147102	1500B -1	1 - G 6
	147202	1500B -1	1 - G 6
	147202	1500BA-1	1 - I 6
	19933	1910 -1	1 - K 8
	19934	1910 -1	1 - K 8
HOSE, PRESSURE	32490	3240 -2	1 - D13
HOSE, RETURN	32471	3240 -2	1 - D13
HOSE, VACUUM	132431	1380BA-3	1 - M 5
	132431	1380B -3	1 - L 5
	132451	1380BA-3	1 - M 5
	132451	1380B -3	1 L 5
	132461	1380B -3	1 - L 5
	132531	1380B -3	1 - L 5
	19904	1910 -1	1 - K 8
	20342	1380BA-3	1 - M 5
	43640	4340A -2	1 M15
	43640	4340 -2	1 - K15
	43836	4340 -2	1 - K15
	43836	4340A -2	1 M15
	43836A	4340 -2	1 - K15
	43836A	4340A -2	1 - M15
	43836C	4340 -2	1 K15
	43836C	4340A -2	1 M15
HOSE VENT	42571	4200 -1	1 - G15
HOSE, VENT -PURGE CONTROL	13740	1380B -3	1 - L 5
HOSE, VENT PURGE CONTROL VALVE	13740	1380BA-3	1 M 5
HOSE, VENTILATION	137428	1380B 3	1 - L 5
	13744	1380BA 3	1 - M 5
	13786A	1330BA 1	1 I 4
	13787A	1380BA-3	1 - M 5
	13971	1320BA-2	1 - J 4
	13971	1320b 2	1 - H 4
HOSE WATER	13671	1380BA 3	1 - M 5
	15185	1500BA 1	1 - I 6
	15185	1500B 2	1 H 6
	15186	1500B 2	1 H 6
	15186	1500BA 1	1 I 6
HOSE WATER INLET	132081	1380B 3	1 L 5
HOSE WATER SUB TANK	15277	1500BA 2	1 J 6
	15277	1500B 2	1 H 6
HOSE WATER B A C V & R H	136838	1380BA-3	1 M 5
	136838	1380B 3	1 L 5
HOSE WATER B A C V & T B	136828	1380BA 3	1 M 5

PART NAME	D-CODE	SECTION	LOCATION
	136828	1380B -3	1 - I 5
HOSE WATER-TURBO CHARGER WATER-PIPE	13546	1310BA-2	1 - E 4
HOUSING (L), LAMP-LID HINGE	515132	5103 -1	2 - L 3
HOUSING (L), LAMP-REAR FENDER	71451E	5340AA-2	2 - I 5
HOUSING (L), LICENSE LAMP	511648	5120 -1	2 - E 4
HOUSING (R), LAMP-LID HINGE	51513	5103 -1	2 - L 3
HOUSING (R), LAMP-REAR FENDER	70451E	5340AA-2	2 - I 5
HOUSING (R), LICENSE LAMP	51154	5120 -1	2 - E 4
HOUSING SET, WATER PUMP	15100T	1500BA-1	1 - I 6
	15100T	1500B -1	1 - G 6
HOUSING CLUTCH	16210	1600A -1	1 - M 6
HOUSING CONVERTER	19211	1910 -1	1 - K 8
HOUSING, EXTENSION	17330	1700A -1	1 - C 7
	17330	1700 -1	1 - N 6
	19710	1920 -2	1 - M 8
HOUSING, FRONT	102001	1040BA-1	1 - H 3
	102001	1040B -1	1 - G 3
HOUSING, INTERMEDIATE	104001	1030BA-1	1 - F 3
	104001	1030B -1	1 - C 3
HOUSING, RACK	32120A	3220A -1	1 - L12
	32120A	3220 -1	1 K12
HOUSING, REAR	103001	1040BA-1	1 - H 3
	103001	1040B -1	1 - G 3
HOUSING, ROTOR-FRONT	101001	1030B -1	1 - E 3
	101001	1030BA-1	1 - F 3
HOUSING, ROTOR-REAR	101501	1030B -1	1 - E 3
	101501	1030BA-1	1 - F 3
HOUSING, WAX	13W8Y	1364BA-1	1 - D 5
	13W8Y	1364B -1	1 - C 5
HUB (L), TOE CONTROL-OUTER	26141Y	2600 -1	1 - E11
HUB (R), TOE CONTROL-OUTER	26141A	2600 -1	1 - E11
HUB, CLUTCH	17241	1710 -1	1 - D 7
	17241	1710A -1	1 - G 7
	17261	1710A -1	1 - G 7
	17261	1710 -1	1 - D 7
	17621	1710A -2	1 - H 7
	17621	1710 -2	1 - E 7
HUB, FRONT WHEEL	33061	3300 -3	1 - G13
	33061	3300A -2	1 - J13
	33061	3300B -2	1 - L13
HUB, O DRIVE CLUTCH	21531	1930 -2	1 - F 9
HUB, REAR CLUTCH	19530	1930 -2	1 F 9
	19531	1930 -2	1 - F 9
HUB, WATER PUMP PULLEY	15117	1500B -1	1 G 6
	15117B	1500BA-1	1 I 6
HYDRAULIC UNIT, A B S	437A0	4170 -2	1 - E16

IGNITER, IGNITION COIL-LEADING	18251	1800BA-2	1 - D 8
	18251	1800B -2	1 - M 7
IGNITER, IGNITION COIL-TRAILING	18251A	1800B -2	1 M 7
	18251A	1800BA-2	1 - D 8
INDICATOR	643a0A	5570 1	2 - I 7
INDICATOR LEVEL	43540	4340 -2	1 - K15
	43540	4340A 2	1 M15
INJECTOR FUEL	13250A	1320BA 1	1 - I 4
	13250A	1320B 1	1 - G 4
INSULATOR	39811	3900B 1	1 - J14
	39811	3900BA 1	1 K14
	40401	4000BA-1	1 C15
	40401	4000B 1	1 L14
	42901A	4200 1	1 G15
INSULATOR (L)	56450	5390 2	2 D 6
	56450	5390A 2	2 F 6
INSULATOR (L) CROSS MEMBER	686362	6860A 1	3 L 5

ALPHABETICAL INDEX

PART NAME	D-CODE	SECTION	LOCATION
INSULATOR (L), CROSS MEMBER	68636Z	6860AA-1	3 - C 6
INSULATOR (L), HOOD	68661Z	6860AA-1	3 - C 6
INSULATOR (L), TIRE HOUSING	68663Z	6860AA-1	3 - C 6
	68663Z	6860AB-1	3 - F 6
	68663Z	6860A -1	3 - L 5
INSULATOR (R)	56430	5390A -2	2 - F 6
	56430	5390 -2	2 - D 6
INSULATOR (R), CROSS MEMBER	68636	6860A -1	3 - L 5
	68636	6860AA-1	3 - C 6
INSULATOR (R), HOOD	68661	6860AA-1	3 - C 6
INSULATOR (R), TIRE HOUSING	68663	6860AA-1	3 - C 6
	68663	6860AB-1	3 - E 6
	68663	6860A -1	3 - L 5
INSULATOR NO. 2, FRONT	56440	5390 -2	2 - D 6
	56440	5390A -2	2 - F 6
INSULATOR NO. 3, FRONT	56431A	5390A -2	2 - F 6
	56431A	5390 -2	2 - D 6
INSULATOR, BONNET	68661C	6860A -1	3 - L 5
	68661C	6860AB-1	3 - E 6
INSULATOR, DASHBOARD	68620	6860AB-1	3 - E 6
	68620	6860A -1	3 - L 5
	68620	6860AA-1	3 - C 6
INSULATOR, EXHAUST MANIFOLD	13390D	1310BA-2	1 - E 4
	13390D	1310B -1	1 - C 4
INSULATOR, FUEL DISTRIBUTOR	13158	1320B -1	1 G 4
	13158	1320BA-1	1 - I 4
INSULATOR, HEAT-FRONT	56410	5390A -2	2 - F 6
	56410	5390 -2	2 - D 6
INSULATOR, HYDRAULIC UNIT	43350	4370 -2	1 - E16
INSULATOR, INJECTION	13257	1320BA-1	1 - I 4
	13257	1320B -1	1 - G 4
INSULATOR, OIL PAN	19040	1920 -1	1 - L 8
INSULATOR, RUBBER		6132A -1	2 - G14
		6132A -1	2 - G14
INSULATOR, SPARE TIRE	68653A	6860A -1	3 - L 5
	68653A	6860AB-1	3 - E 6
	68653A	6860AA-1	3 - C 6
INSULATOR, TANK-FUEL	56991D	5390 -2	2 - D 6
	56991D	5390A -2	2 - F 6
INSULATOR, THROTTLE BODY	13645	1380B -3	1 - I 5
INSULATOR, TOP CEILING	R1230	6330A -1	2 E15
INSULATOR, TURBO	136201	1310BA-2	1 - E 4
	136701	1310BA-2	1 - E 4
INTERCOOLER	13550	1310BA-2	1 - E 4
• • • J • • •			
JACK	68800A	3700 -3	1 G14
	68800A	3700A -2	1 - I14
JOINT	58314B	5830A 1	2 - C12
	58314B	5830AA 1	2 - H12
JOINT 'U'	67502D	6720 -2	3 H 4
JOINT SET, BALL	32280S	3230 1	1 M12
JOINT SET, INNER	22520	2550 1	1 D11
JOINT SET, OUTER	22510B	2550 -1	1 D11
JOINT, BACK WIND MOULDING	50615A	5030A 1	2 H 3
JOINT, BALL	32240A	3230 1	1 M12
JOINT, ELBOW	67502C	6720 2	3 H 4
	67502C	6750 1	3 K 4
JOINT, FLARE	43799	4370 2	1 E16
JOINT, HOSE	67502A	6720 -2	3 H 4
	67502A	6750 1	3 K 4
	67502B	6720 2	3 H 4
	67502B	6750 1	3 K 4
JOINT, PIPE	10412J	1040BA 1	1 F 3
	10412J	1030B 1	1 E 3

PART NAME	D-CODE	SECTION	LOCATION
	43504	4370 -2	1 - E16
	45221	4360 1	1 - N15
	45221	4360A 1	1 - C16
JOINT, RUBBER	13245	1310BA-2	1 - E 4
	13746	1310BA 2	1 - E 4
JOINT, UNION	99384	1040BA-1	1 - H 3
	99384	1040B -1	1 - G 3
JUNCTION (L) CORNER-QUARTER PANEL	71114A	5340A -1	2 - F 5
	71114A	5340A -2	2 - G 5
	71114A	5340AA-2	2 - I 5
JUNCTION (R), CORNER-QUARTER PANEL	70114A	5340AA-1	2 - H 5
	70114A	5340A -1	2 - F 5
• • • K • • •			
KEY	141191	1400B 1	1 - C 6
	141191	1400BA-1	1 E 6
	17341K	1710A -2	1 - H 7
	17341K	1940 1	1 - H 9
KEY SET	09010	0900A -1	2 - C 3
KEY SUB SET (L) DOOR	75920	0900A -1	2 - C 3
KEY SUB SET (R), DOOR	75910	0900A 1	2 - C 3
KEY SUB SET, GLOVE	75950	0900A -1	2 - C 3
KEY SUB SET, IGNITION SWITCH	75980	0900A 1	2 - C 3
KEY SUB SET, LIFT GATE	75960	0900A -1	2 - C 3
KEY SUB SET, STORAGE	76190	0900A 2	2 - D 3
KEY SUB SET, TRUNK	75930	0900A -1	2 - C 3
KEY, BLANK	75168	0900A 1	2 C 3
KEY, BLANK-SECONDARY	76202	0900A -2	2 - D 3
KEY, FLYWHEEL	117051	1100BA-1	1 - J 3
	117051	1100B -1	1 I 3
KEY, PRIMARY	58492	0900A -1	2 - C 3
KEY, SECONDARY	58492A	0900A -1	2 - C 3
KEY, SHAFT		6142A 1	2 - I14
KEY, SYNCHRONIZER	17243	1710 -1	1 - D 7
	17243	1710A -1	1 - G 7
	17263A	1710A 1	1 G 7
KEY, WOODRUFF-PULLEY	11301J	1100BA-1	1 - I 3
	11301J	1100B -1	1 I 3
KNOB 'A' DOOR MIRROR	69114A	6900A -3	3 E 7
KNOB 'B', DOOR MIRROR	69115C	6900A -3	3 - E 7
KNOB (L) DOOR LOCK	58691D	5830A -4	2 F12
	58691D	5830AA-2	2 I12
KNOB (L), KNUCKLE	88081B	5700AC-3	2 - H10
	88081B	5700AB-2	2 - D10
	88081B	5700AA-9	2 - K 9
	88081B	5700A -4	2 - F 8
KNOB (R) DOOR LOCK	58691C	5830AA-2	2 - I12
	58691C	5830A -4	2 F12
KNOB (R) KNUCKLE	88081A	5700AC-3	2 - H10
	88081A	5700AA-9	2 - K 9
	88081A	5700A -4	2 - F 8
	88081A	5700AB-2	2 - D10
KNOB NO. 1	61191A	6115 1	2 - D14
KNOB, BALANCE TUNER	66BR3	6680 -4	2 I16
KNOB, CHANGE LEVER	17520	1720 1	1 J 7
	17520	1720A -1	1 - K 7
	46030	4600 -1	1 - I16
KNOB, CLOCK	55712B	5500B 1	2 J 6
	55712B	5500 1	2 G 6
	55712B	5500A 1	2 - I 6
KNOB, DUMMY CLUSTER SWITCH	66183F	6612 1	2 C16
KNOB, HAZARD CLUSTER SWITCH	66184C	6612 1	2 C16
KNOB, LIGHT-CLUSTER SWITCH	66171B	6612 -1	2 C16
KNOB, PANEL LIGHT CLUSTER	66172F	6612 1	2 C16
KNOB, REAR DEFFOGER-CLUSTER	66174D	6612 1	2 C16

PART NAME	D-CODE	SECTION	LOCATION
KNOB, SMALL-CLUSTER SWITCH	66173F	6612 -1	2 - C16
KNOB, TONE-TUNER	66912A	6680 -3	2 - K16
KNOB, TRIPMETER	55472	5540A -1	2 - C 7
	55472	5540 -1	2 M 6
	55472	5540B -1	2 E 7
KNOB, TURN CLUSTER SWITCH	66131	6612 -1	2 - C16
KNOB, VOL-REMOTE CONTROL	66BL1	6680 -4	2 - I16
KNOB, VOLUME-TUNER	66914	6680 -3	2 K16
KNOB, WASHER-CLUSTER SWITCH	66182D	6612 -1	2 - C16
KNOB, WIPER-CLUSTER SWITCH	66181B	6612 -1	2 - C16
KNUCKLE (L), RECLINING	88151	5700AA-11	2 - M 9
	88151	5700A -6	2 - H 8
	88151	5700AB-3	2 - E10
	88151	5700AC-4	2 - I10
KNUCKLE (L) STEERING	33020Z	3300B -2	1 - L13
	33020Z	3300A -2	1 - J13
	33020Z	3300 -3	1 - G13
KNUCKLE (R) RECLINING	88101	5700AA-9	2 - K 9
	88101	5700AB-2	2 - D10
	88101	5700A -4	2 - F 8
	88101	5700AC-3	2 - H10
KNUCKLE (R), STEERING	33020	3300A -2	1 - J13
	33020	3300 3	1 G13
	33020	3300B -2	1 - L13
• • • L • • •			
L-GROMMET		6132A 1	2 - G14
LABEL, BATTERY	69064	6930 -1	3 H 7
LABEL, BURGLAR ALARM	66201A	6930 -1	3 - H 7
LABEL, CAUTION	61829	6930 -1	3 H 7
LABEL, CAUTION-BATTERY BOX	18599	6930 1	3 - H 7
LABEL, CAUTION-RETRACTABLE	51408A	6930 -1	3 - H 7
LABEL, EMISSION	69041	6930 -1	3 - H 7
LABEL, GASOLINE	69038A	6930 -1	3 - H 7
LABEL, HOOD STAY	55799	6930 -1	3 - H 7
LABEL, OIL	69013	6930 -1	3 H 7
LABEL, SAFETY PANEL	69055A	6930 -1	3 H 7
LABEL, TEMPORARY TIRE	69014A	6930 -1	3 - H 7
LABEL, TIRE	69014	6930 1	3 - H 7
LABEL, UNLEADED FUEL	69C61	6930 -2	3 I 7
LABEL, VACUUM DIAPHRAGM	69044A	6930 -1	3 - H 7
LAMP (L), COURTESY-DOOR TRIM	51530Y	5840AB-1	2 - K13
LAMP (L) SIDE TURN-REAR	51550Y	5120 -1	2 - E 4
LAMP (R), COURTESY-DOOR TRIM	51530A	5840A -1	2 - C13
	51530A	5840AB-1	2 - K13
	51530Y	5840A -1	2 - C13
LAMP (R), SIDE TURN-REAR	51550A	5120 -1	2 - E 4
LAMP SET (L), FRONT COMBINATION	51060Z	5105 1	2 - M 3
LAMP SET (L) REAR COMBINATION	51150Z	5110A -1	2 - C 4
LAMP SET (L), SIDE TURN	51120X	5105 -1	2 - M 3
LAMP SET (R), FRONT COMBINATION	51060	5105 -1	2 - M 3
LAMP SET (R), REAR COMBINATION	51150	5110A -1	2 C 4
LAMP SET (R) SIDE TURN	51120B	5105 -1	2 M 3
LAMP SUB SET (L) HEAD	51031Y	5100 -1	2 K 3
LAMP SUB SET (R) HEAD	51031A	5100 -1	2 K 3
LAMP, CARGO ROOM	51440A	5125 1	2 F 4
LAMP, COURTESY	51460A	5125 1	2 F 4
LAMP, LICENSE	51270	5120 -1	2 E 4
LAMP, STOP-HIGH MOUNTED	51580	5110A 1	2 C 4
LATCH, TRUNK END TRIM	68893	6860AA 2	3 D 6
	68893	6860A 3	3 N 5
LENS & BODY (L) REAR COMBINATION	51161Y	5110A 1	2 C 4
LENS & BODY (R) REAR COMBINATION	51161A	5110A 1	2 C 4
LENS (L) COURTESY LAMP	51451Z	5840A 1	2 C13
	51451Z	5840AB 1	2 K13

ALPHABETICAL INDEX

ALPHABETICAL INDEX

PART NAME	D-CODE	SECTION	LOCATION
LENS (L) FRONT COMBINATION	51063Z	5105 -1	2 - M 3
LENS (L) REAR COMBINATION	51161Z	5110A -1	2 - C 4
LENS (L), SIDE TURN	51122Z	5105 -1	2 - M 3
LENS (R) COURTESY LAMP	51451	5840AB-1	2 - K13
	51451	5840A -1	2 - C13
LENS (R), FRONT COMBINATION	51063	5105 -1	2 - M 3
LENS (R), REAR COMBINATION	51161	5110A -1	2 - C 4
LENS (R), SIDE TURN	51122	5105 -1	2 - M 3
LENS COLUMN COVER	60246	5500A -1	2 - I 6
	60246	5500 -2	2 - H 6
	60246	5500B 1	2 - J 6
LENS COURTESY	51461C	5125 -1	2 - F 4
LENS, FRONT	55448A	5540 -1	2 - M 6
	55448A	5540A -1	2 - C 7
	55448A	5540B -1	2 - E 7
LENS INTERIOR LAMP	69223	6900A -3	3 - F 7
LENS ROOM LAMP-HEAD CONSOLE	69873	5130 -1	2 - G 4
LENS, SIDE WALL	64245	6845 -1	3 - K 5
LENS, STOP LAMP-HIGH MOUNTED	51583	5110A -1	2 - C 4
LENS, WARNING	55444B	5540A -1	2 - C 7
	55444B	5540 -1	2 - M 6
	55444B	5540B -1	2 - E 7
LEVER	24730	1840B -1	1 - H 8
	24730	1840BA-1	1 I 8
LEVER (L), OPERATING	26800Z	2610 -1	1 - F11
LEVER (R), OPERATING	26800	2610 -1	1 - F11
LEVER SET, THROTTLE BODY	13W6X	1364B -1	1 - C 5
	13W6X	1364BA-1	1 - D 5
LEVER, CHANGE	17510	1720A -1	1 - K 7
	17510	1720 -1	1 - J 7
LEVER, CONTROL	17461	1720A -1	1 - K 7
LEVER DOOR MIRROR	69113C	6900A -2	3 - D 7
LEVER, LIFTER	88141P	5700A -6	2 - H 8
	88141P	5700AA-11	2 - M 9
	88141P	5700AB-3	2 - E10
LEVER OPENER	56860A	6230 -1	2 - L14
LEVER PARKING	19448	1950 -1	1 - I 9
LEVER, PARKING BRAKE	44010	4400 -1	1 - F16
LEVER, SELECT	19031	1950 -1	1 - I 9
	46010	4600 -1	1 - I16
	46074	4600 -1	1 - I16
LEVER SHIFT	17450	1720 -1	1 - J 7
LEVER, THROTTLE	13W64	1364B -1	1 - C 5
	13W64	1364BA-1	1 - D 5
LID (L) LAMP	51421Z	5103 -1	2 - L 3
LID (R) LAMP	51421	5103 -1	2 - L 3
LID CONSOLE	64450	5570 -1	2 - I 7
LID, FUEL FILLER	42410	4200 -1	1 - G15
LID, GLOVE POCKET	64030	5560 -2	2 - G 7
LID, INNER	V0622	7900 -1	3 - L 7
LID INNER-STORAGE BOX	69782B	6845 -1	3 - K 5
LID OUTER	V0631	7900 -1	3 - L 7
LID OUTER-STORAGE BOX	69780	6845 -1	3 - K 5
LID, SIDE-TRUNK ROOM	6885X	6840A -1	3 - F 5
	6885X	6840AB-1	3 - J 5
LID TRUNK	52610	5260 -1	2 - L 4
LIGHTER CIGAR	66250	6610 -1	2 - M15
LINK (L) DEFLECTOR	69846Z	6330 -1	2 - C15
LINK (R) DEFLECTOR	69846	6330 -1	2 - C15
LINK SET MODE	76550	6110 -1	2 - C14
LINK SET TEMPERATURE	76510C	6110 -1	2 - C14
LINK CONNECTING	26812	2610 -1	1 - F11
LINK CONTROL-LOWER ARM	28210	2830 -1	1 F12
LINK CONTROL-STABILIZER	28170B	2810 -1	1 - E12
	34170A	3410 1	1 - D14
LINK FUSIBLE	67099	6700B -1	3 - I 3
	67099	6701B -1	3 - L 3
	67099	6701 -1	3 - J 3
	67099	6701A -1	3 - K 3
LINK, LATERAL	28600	2800B -1	1 - D12
	28600	2800A -1	1 - C12
	28600	2800 -1	1 - N11
LINK, SUB-LOWER ARM	28830	2830 -1	1 - F12
LINK, WIPER	76601	6730 -1	3 - I 4
LOCK (L), DOOR	583107	5830A -1	2 - C12
	58310Z	5830AA-1	2 - H12
LOCK (L), GLASS HATCH	63310A	6230 -2	2 - M14
LOCK (L), HINGE-TOP	R1920A	6330A -1	2 - E15
LOCK (L), TOP	R1870	6330A -1	2 - E15
LOCK (R), DOOR	58310	5830A -1	2 - C12
	58310	5830AA-1	2 - H12
LOCK (R), GLASS HATCH	62310C	6230 -1	2 - L14
LOCK (R), HINGE-TOP	R1910A	6330A -1	2 - E15
LOCK (R), TOP	R1860A	6330A -1	2 - E15
LOCK, CONSOLE-REAR	64430A	5570 -1	2 - I 7
LOCK, HOOD	56620	5230 -1	2 - K 4
LOCK, LID	56820	5260 -1	2 - L 4
LOUVER	64815I	5500B -1	2 - J 6
	64815I	5500 -2	2 - H 6
	64815I	5500A -1	2 - I 6
LOUVER, LAP-LOWER PAN	64850A	5560 -2	2 - G 7
* * * M * * *			
MAGNET	17121B	1700A -1	1 - C 7
MANIFOLD, EXHAUST	13450	1310BA-2	1 - E 4
	13450	1310B -1	1 - C 4
MANIFOLD, EXTENSION	1323X	1300B -1	1 - M 3
MANIFOLD, INTAKE	13100	1300BA-1	1 - N 3
	13100	1300B -1	1 - M 3
MAT, CONSOLE-REAR	64426	5570 -1	2 - I 7
MAT, END-TRUNK ROOM	68681G	6860AB-1	3 - E 6
	68681G	6860A -2	3 - M 5
MAT, FLOOR	68671A	6860A -1	3 - L 5
	68671A	6860AA-1	3 - C 6
	68671A	6860AB-1	3 - E 6
MAT, PARKING BRAKE	68678B	6860A -2	3 - M 5
	68678B	6860AA-1	3 - C 6
	68678B	6860AB-1	3 - E 6
MAT, TRUNK ROOM	68695	6860AA-2	3 - D 6
	68695	6860A -2	3 - M 5
	68695	6860AB-1	3 - E 6
MEMBER NO 3, CROSS-LOWER	53920B	5370 -1	2 - L 5
	53920B	5370A -1	2 - M 5
MEMBER NO. 3, CROSS-UPPER	53910	5370 -1	2 - L 5
	53910	5370A -1	2 - M 5
MEMBER NO 4, CROSS	53940	5370 -1	2 - L 5
	53940	5370A -1	2 - M 5
MEMBER, CROSS	34800	3410 -1	1 - D14
	53160B	5310A -1	2 - N 4
	53160B	5310 -1	2 - M 4
MEMBER, CROSS-FRONT FRAME	5676XA	5390A -2	2 - F 6
MEMBER, FRONT FLOOR	5674X	5370A -2	2 - N 5
MEMBER, REAR END	70751B	5340AA-2	2 - I 5
MEMBER, TRANSMISSION	39380	3900BA-1	1 - K14
MEMBER, TRANSMISSION MOUNTING	39380	3900B -1	1 - J14
METER SET	55430	5540B -1	2 - E 7
	55430	5540A -1	2 - C 7
	55430	5540 -1	2 - M 6
METER AIR FLOW	13210A	1330B -1	1 - K 4
	13210A	1330BA-1	1 - L 4
METER BOOST & OIL	55451E	5540 -1	2 - M 6
	55451E	5540A -1	2 - C 7
METER, FUEL & THERMO	55491A	5540A -1	2 - C 7
	55491A	5540B -1	2 - E 7
	55491A	5540 -1	2 - M 6
METER, OIL & VOLTAGE	55491C	5540A -1	2 - C 7
	55491C	5540 -1	2 - M 6
	55491C	5540B -1	2 - E 7
MIRROR (L), DOOR		6900A -2	3 - D 7
	69110Y	6900A -1	3 - C 7
MIRROR (R), DOOR	69110A	6900A -1	3 - C 7
MIRROR, INTERIOR	69170	6900A -3	3 - E 7
MOTOR	67450A	6750 -1	3 - K 4
MOTOR (L)	51931Z	5103 -1	2 - L 3
MOTOR (L), TOP	R1520A	6330A -1	2 - E15
MOTOR (L), WINDOW	58580Z	5830A -4	2 - F12
MOTOR (R)	51931	5103 -1	2 - L 3
MOTOR (R), TOP	R1510	6330A -1	2 - E15
MOTOR (R), WINDOW	58580	5830A -4	2 - F12
MOTOR, BLOWER	76453C	6120 -1	2 - E14
MOTOR, COOLING FAN	15150A	1500BA-1	1 - I 6
	15150A	1500B -1	1 - G 6
MOTOR, SUNROOF	69848	6330 -1	2 - C15
MOTOR, WIPER	67350	6730 -1	3 - I 4
MOULDING (L), REAR	50943C	5040A -1	2 - I 3
MOULDING (L), SASH-DOOR	50985	5800A -1	2 - J11
	50985	5800AA-1	2 - K11
MOULDING (R), REAR	50942C	5040A -1	2 - I 3
MOULDING (R), SASH-DOOR	50981A	5800AA-1	2 - K11
	50981A	5800A -1	2 - J11
MOULDING SET (L), FRONT SIDE	50503X	5030A -1	2 - H 3
MOULDING SET (R), FRONT SIDE	50503B	5030A -1	2 - H 3
MOULDING, REAR WINDOW	50611	5030A -1	2 - H 3
MOULDING, WINDOW-FRONT	50601	5030A -1	2 - H 3
* * * N * * *			
NOZZLE (L), DEFROSTER	60120Z	6100 -1	2 N13
NOZZLE (R), DEFROSTER	60120	6100 -1	2 - N13
NOZZLE, WASHER	67490A	6750 -1	3 - K 4
NOZZLE, WASHER-WINDSHIELD	67510	6720 -2	3 - H 4
NUT		6132A -1	2 - G14
		6132A -1	2 - G14
		6142A -1	2 - I14
		6142A -1	2 - I14
		6152A -1	2 - J14
		6152A -1	2 - J14
	13W68	1364B -1	1 - C 5
	13W68	1364BA-1	1 - D 5
	19389	1920 -1	1 - L 8
	19819	1925 -1	1 - C 9
	25124	2500 -1	1 - C11
	25124	2550 -1	1 - D11
	25124	2830 -1	1 - F12
	28091	2830 -1	1 - F12
	28091	3400 -1	1 - M13
	28091	3400B -1	1 - C14
	28091	3400A -1	1 - N13
	33042	3300 -3	1 - G13
	33042	3300A -2	1 - J13
	33042	3300B -2	1 - L13
	33042A	2600 -1	1 - E11
	34089A	3400A -1	1 - N13
	34091	3400A -1	1 - N13
	34091	3400 -1	1 - M13
	34091	3400B -1	1 - C14
	34091	3410 -1	1 - D14

ALPHABETICAL INDEX

PART NAME	D-CODE	SECTION	LOCATION
NUT	34222	2830 -1	1 - F12
	39037	2800 -1	1 - N11
	39037	2800A -1	1 - C12
	39037	2800B -1	1 - D12
	39037	2830 -2	1 - G12
	39037	3410 -1	1 - D14
	40355A	1310BA-3	1 - F 4
	40355A	1310B -1	1 - C 4
	40355A	4000BA-1	1 - C15
	40355A	4000B -1	1 - L14
	66372B	6750 -1	3 - K 4
	88704P	5700AA-12	2 - N 9
	88704P	5700AB-3	2 - E10
	88704P	5700AC-4	2 - I10
	88704P	5700A -8	2 - J 8
NUT SET	24533	1830BA-1	1 - G 8
	24533	1830B -1	1 - F 8
NUT, ADJUST	32152A	3220A -1	1 - L12
NUT, ADJUST-SUNROOF FRAME	69927	6330 -2	2 - D15
NUT, CAP	13742A	1330B -1	1 - K 4
	68625	5320 -1	2 - C 5
NUT, CAP-REAR SPOILER	51964A	7800 -1	3 - K 7
NUT, CLIP	50335	5000 -1	2 - E 3
	50825C	4360 -1	1 - N15
	50825C	4360A -1	1 - C16
NUT, EXPANSION	64996	5560 -3	2 - H 7
	688C2	7250 -1	3 - J 7
NUT, FLANGE	28333A	2800B -1	1 - D12
	28333A	2800 -1	1 - N11
	28333A	2800A -1	1 - C12
	28333A	3900BA-1	1 - K14
	28333A	3900B -1	1 - J14
NUT, FLANGE-CAP	68615B	6860AB-1	3 - E 6
	68615B	6860AA-1	3 - C 6
	68615B	6860A -1	3 - L 5
NUT, FLNGE CAP	68615B	5320 -1	2 - C 5
NUT, HOOD	64425B	5230 -1	2 - K 4
NUT, HOOD OUTER	R1219	6330A -1	2 - E15
NUT, HUB	26161A	3700 -1	1 - E14
	26161A	3700A -1	1 - H14
NUT, LOCK	11711	1100BA-1	1 - J 3
	11711	1100B -1	1 - I 3
	17524	1720A -1	1 - K 7
	17524	1720 -1	1 - J 7
	27030	2710C -1	1 - L11
	27030	2710A -1	1 - J11
	27030	2710 -1	1 - H11
	32132C	3220 -1	1 - K12
NUT, LOCK-CLUTCH HUB	17629	1710A -2	1 - H 7
	17629	1710 -2	1 - E 7
NUT, LOCK-COUNTER SHAFT BRACKET	17309B	1710 -2	1 - E 7
	17309B	1710A -2	1 - H 7
NUT, LOCK-RACK	32131A	3220A -1	1 - L12
	32131A	3220 -1	1 - K12
NUT, LOWER ARM	26135	2600 -1	1 - E11
NUT, MOUNTING-ANTENNA	66A30	6682 -3	3 - E 3
NUT, PANEL-SUNROOF	69804	6330 -1	2 - C15
NUT, SELF LOCK	56376	5320 -1	2 - C 5
NUT, SHAFT	19443	1950 -1	1 - I 9
NUT, SPEED	68432	5840A -6	2 - H13
	68432	5840AB-2	2 - H13
	68716A	6860AA-2	3 - D 6
	68716A	6860A -3	3 - N 5
	69049A	6860AA-2	3 - D 6
	69049A	6860A -3	3 - N 5
	69049D	6860AA-2	3 - D 6
	69049D	6860A -3	3 - N 5
NUT, SPEED-STEERING LOCK	66158	0900A -1	2 - C 3
NUT, SPRING	56905A	5000 -1	2 - E 3
	56905A	5560 -1	2 - F 7
	56905A	7800 -1	3 - K 7
NUT, SPRING-AIR DAM SKIRT	50733	5000 -1	2 - E 3
NUT STOPPER	148221	1500B -1	1 - G 6
	148221	1500BA-1	1 - I 6
NUT, WIPER ARM-FRONT	67304	6730 -1	3 - I 4
*** O ***			
O-RING		6132A -2	2 - H14
		6132A -3	2 - H14
		6132A -1	2 - C14
		6152A -1	2 - J14
		6152A -1	2 - J14
	101731	1030B -1	1 - E 3
	101731	1030BA-1	1 - F 3
	101741	1040B -1	1 - G 3
	101741	1040BA-1	1 - H 3
	105551	1030B -1	1 - E 3
	105551	1030BA-1	1 - F 3
	13100J	1300BA-1	1 - N 3
	13253	1320B -1	1 - G 4
	13253	1320BA-1	1 - I 4
	13W69	1364B -1	1 - C 5
	13W69	1364BA-1	1 - D 5
	146041	1400BA-1	1 - E 6
	146041	1400B -1	1 - C 6
	17442J	1700 -1	1 - N 6
	17442J	1700A -1	1 - C 7
	17442J	1920 -1	1 - L 8
	18201	1100BA-	1 - J 3
	18201	1100B -1	1 - I 3
	18201	1800B -2	1 - M 7
	18201	1800BA-2	1 - D 8
	19395	1920 -1	1 - L 8
	19432	1950 -1	1 - I 9
	19446	6600B -3	2 - I15
	19840J	3220A -1	1 - L12
	19840J	3220 -1	1 - K12
	21212	1920 -2	1 - M 8
	21277	1920 -2	1 - M 8
	21292	6600B -3	2 - I15
	21294	6600B -3	2 - I15
	21295	6600B -3	2 - I15
	21395	1920 -2	1 - M 8
	21677	1910 -1	1 - K 8
	32087	3210 -1	1 - I12
	32087	3210A -1	1 - J12
O-RING SET	230401	1000BA-1	1 - C 3
	230401	1000B -1	1 - C 3
O-RING, INNER	113411	1110B -1	1 - K 3
	113411	1110BA-1	1 - L 3
O-RING, MOUNTING-ANTENNA	66A32	6682 -3	3 - E 3
O-RING, OUTER	113431	1110BA-1	1 - L 3
	113431	1110B -1	1 - K 3
O-RING PRESSURE REGULATOR	13282A	1320BA-1	1 - I 4
O-RING, VANE PUMP	32614	3240 -2	1 - D13
O-RING-OIL LEVEL SENSOR	10T11	6600BA-2	2 - K15
	10T11	6600B -2	2 - H15
O-RING-WATER THERMO SWITCH	18T41	6600B -3	2 - I15
	18T41	6600BA-3	2 - L15
OPENER, FILLER LID	42430	4200 -1	1 - G15
OPENER, L GATE & F LID	56850B	6230 -1	2 - L14
OPENER, TRUNK LID & FUEL LID	56854B	5260 -1	2 - L 4
ORIFICE	13986B	6600BA-2	2 - K15
	13986B	6600B -2	2 - H15
ORNAMENT, CAR NAME-REAR	51720	5170 -1	2 - H 4
ORNAMENT, GRADE-REAR	51760	5170 -1	2 - H 4
ORNAMENT, MANUFACTURER NAME-FRONT	51711C	5170 -1	2 - H 4
ORNAMENT, MANUFACTURER NAME-REAR	51711B	5170 -1	2 - H 4
ORNAMENT, STEREO	55231	6680 -3	2 - K16
ORNAMENT, TUNER	55991	6680 -3	2 - K16
ORNAMENT, TURBO-SIDE	51771L	5170 -1	2 - H 4
*** P ***			
PACK, SILENT	64493A	5570 -2	2 - J 7
PAD	58608	5830A -4	2 - F12
PAD (L), SIDE-DASHBOARD	68666X	6860A -1	3 - L 5
	68666X	6860AA-1	3 - C 6
	68666X	6860AB-1	3 - E 6
PAD (R), SIDE-DASHBOARD	68666B	6860AB-1	3 - E 6
	68666B	6860A -1	3 - L 5
	68666B	6860AA-1	3 - C 6
PAD NO. 1, GARNISH-UPPER	60734	5560 -2	2 - G 7
PAD NO. 2, GARNISH-UPPER	60735	5560 -2	2 - G 7
PAD SET, FRONT CALIPER	49280B	3300B -2	1 - L13
	49280B	3300A -2	1 - J13
	49280B	3300 -4	1 - H13
PAD SUB SET, REAR	49280A	2610 -1	1 - F11
PAD, ACCELERATOR PEDAL	41711A	4160 -1	1 - F15
PAD, CHANGE BOOT	64494	5570 -2	2 - J 7
PAD, CRUSH	60350	5560 -1	2 - F 7
PAD, FLOOR-REAR	6866Y	6860AB-1	3 - E 6
PAD, FOOT REST	43042	4300 -1	1 - H15
PAD, FRONT FLOOR	68651F	6860AA-1	3 - C 6
	68651F	6860AB-1	3 - E 6
	68651F	6860A -1	3 - L 5
PAD, FUEL TANK	42523	4200 -1	1 - G15
PAD, HORN	32981	3200 -1	1 - H12
PAD, MOUNTING-ANTENNA	66A35	6682 -3	3 - E 3
PAD, PEDAL	43028	4300 -1	1 - H15
PAD, PROTECTOR	67059C	6682 -3	3 - E 3
	67061K	6682 -3	3 - E 3
PAD, REAR SUSPENSION	28099	6682 -2	3 - D 3
PAD, SPACER	88257Q	5700A -8	2 - J 8
PAD, STORAGE BOX	68658A	6860AA-1	3 - C 6
	68658A	6860A -1	3 - L 5
	68658A	6860AB-1	3 - E 6
PAD, SUSPENSION	68665B	6860AB-1	3 - E 6
PAD, TANK PROTECTOR	52398	3700 -3	1 - G14
	52398	3700A -1	1 - H14
	52398	4370 -2	1 - E16
PAD, TRUNK	68665C	6860AA-1	3 - C 6
	68665C	6860A -1	3 - L 5
PAN, FLOOR-FRONT	53600	5370 -1	2 - L 5
	53600	5370A -1	2 - M 5
PAN, FLOOR-REAR	53700	5370 -1	2 - L 5
	53700	5370A -1	2 - M 5
PAN, OIL	10400	1040BA-1	1 - H 3
	10400	1040B -1	1 - G 3
	19836	1920 -2	1 - M 8
PAN, SPARE TIRE	53760	5370 -1	2 - L 5
	53760	5370A -1	2 - M 5
PANEL (L), COWL SIDE	71020	5340AA-2	2 - I 5
	71020	5340A -1	2 - F 5
PANEL (L), DUCT-RADIATOR SHROUD	56811	5310A -1	2 - N 4
	56811	5310 -1	2 - M 4

ALPHABETICAL INDEX

PART NAME	D-CODE	SECTION	LOCATION
PANEL (L). FENDER-FRONT	52210	5320 -1	2 - C 5
	52210	5320B -1	2 - D 5
PANEL (L). FENDER-REAR	74130	5340AA-3	2 - J 5
	74250	5340A -2	2 - G 5
PANEL (L). LOWER	60411Y	5560 -1	2 - F 7
	69839A	6330 -1	2 - C15
PANEL (L). OUTER-FRONT DOOR	58020Z	5800A -1	2 - J11
	58020Z	5800AA-1	2 - K11
PANEL (L). QUARTER	71100	5340AA-2	2 - I 5
	71100	5340A -1	2 - F 5
PANEL (L) QUARTER-REAR END	71771	5340A -2	2 - G 5
PANEL (L). SHROUD	54160	5310 -1	2 - M 4
	54160	5310A -1	2 - N 4
PANEL (L). SHROUD-SIDE	54140A	5310 -1	2 - M 4
PANEL (L). SIDE SEAL	54950	5370A -2	2 - N 5
	54950	5370 -1	2 - L 5
PANEL (L). SIDE SILL	71270	5340AA-2	2 - I 5
	71270	5340A -2	2 - G 5
PANEL (L). SIDE-CRUSH PAD	64911X	5560 -3	2 - H 7
PANEL (L). WHEEL APRON	53210X	5320B -1	2 - D 5
	53210X	5320 -1	2 - C 5
	54210	5320B -1	2 - D 5
	54210	5320 -1	2 - C 5
PANEL (L). WHEEL HOUSE	71150	5340AA-2	2 - I 5
	71150	5340A -2	2 - G 5
PANEL (R) COWL SIDE	70020	5340AA-1	2 - H 5
	70020	5340A -1	2 - F 5
PANEL (R) DUCT-RADIATOR SHROUD	56812	5310 -1	2 - M 4
	56812	5310A -1	2 - N 4
PANEL (R). FENDER-FRONT	52110	5320B -1	2 - D 5
	52110	5320 -1	2 - C 5
PANEL (R). FENDER-REAR	74100	5340AA-2	2 - I 5
	74220	5340A -2	2 - G 5
PANEL (R). LOWER	60411A	5560 -1	2 - F 7
	69838A	6330 -1	2 - C15
PANEL (R). OUTER-FRONT DOOR	58020	5800A -1	2 - J11
	58020	5800AA-1	2 - K11
PANEL (R). QUARTER	70100	5340AA-1	2 - H 5
	70100	5340A -1	2 - F 5
PANEL (R). QUARTER-REAR END	7077X	5340A -1	2 - F 5
PANEL (R). SHROUD	53160	5310 -1	2 - M 4
	53160	5310A -1	2 - N 4
PANEL (R) SHROUD-SIDE	53140B	5310 -1	2 - M 4
PANEL (R) SIDE SILL	53950	5370 -1	2 - L 5
	53950	5370A -1	2 - M 5
	70270	5340AA-1	2 - H 5
	70270	5340A -1	2 - F 5
PANEL (R) SIDE-CRUSH PAD	64911B	5560 -2	2 - G 7
PANEL (R). SIDE-REAR FLOOR	53732	5370A -1	2 - M 5
PANEL (R). SIDE-RR FLOOR	53732	5370 -1	2 - L 5
PANEL (R) WHEEL APRON	53210	5320B -1	2 - D 5
	53210	5320 -1	2 - C 5
	53210B	5320 -1	2 - C 5
	53210B	5320B -1	2 - D 5
PANEL (R). WHEEL HOUSE	70150	5340AA-1	2 - H 5
	70150	5340A -1	2 - F 5
PANEL (RR. L). QUARTER-LOWER	71112	5340A -1	2 - F 5
PANEL (RR L) QUARTER-LOWER	71112	5340AA-2	2 - I 5
PANEL (RR R). QUARTER-LOWER	70112	5340A -1	2 - F 5
	70112	5340AA-1	2 - H 5
PANEL BULK HEAD	56070	5370A -2	2 - N 5
PANEL CENTER	55220	5500 -1	2 - G 6
	55220	5500B -1	2 - J 5
	55220	5500A -1	2 - I 6
PANEL COWL	74040	5330 -1	2 - E 5
PANEL DASH-LOWER	53400	5330 -1	2 - E 5
PANEL, DASH-UPPER	53510	5330 -1	2 - E 5
PANEL, RADIATOR	53100	5310 -1	2 - M 4
PANEL, RADIATOR SHROUD	53100	5310A -1	2 - N 4
PANEL, REAR END	70750	5340A -1	2 - F 5
	70750	5340AA-2	2 - I 5
PANEL, ROOF	74030	5360A -1	2 - K 5
PANEL, ROOF-SOFT TOP	R1810A	6330A -1	2 - E15
PANEL, SUNROOF	69810A	6330 -1	2 - C15
PANEL, SWITCH	64345	5570 -1	2 - I 7
PARTS KIT, BRAKE MASTER	49610	4340 -2	1 - K15
	49610	4340A -2	1 - M15
PARTS KIT, INNER	49460	4140B -1	1 - E15
	49520	4140B -1	1 - E15
	49640D	4340A -2	1 - M15
	49640D	4340 -2	1 - K15
PARTS SET	76619	6740 -1	3 - J 4
	76619A	6760 -1	3 - L 4
PARTS SET, STEERING WHEEL BOSS	32740C	3200 -1	1 - H12
PASS, OIL	17540	1700A -1	1 - C 7
	17540	1700 -1	1 - N 6
	17660	1700A -1	1 - C 7
PAWL, PARKING	19732	1950 -1	1 - I 9
PEDAL & ARM	41610B	4160 -1	1 - F15
PEDAL, BRAKE	43030	4300 -1	1 - H15
PEDAL, CLUTCH	41030	4300 -1	1 - H15
PELLET, THERMO	148101	1500B -1	1 - G 6
	148101	1500BA-1	1 - I 6
PELLET, THERMO-ECCENTRIC	11D15	1100B -1	1 - I 3
	11D15	1100BA-1	1 - J 3
PIECE, 2ND-APEX SEAL	11C03	1110BA-1	1 - L 3
	11C03	1110B -1	1 - K 3
PIECE, DISTANCE	27171	2710 -1	1 - H11
	27171	2710A -1	1 - J11
	27171	2710C -1	1 - L11
PIECE, SIDE	113021	1110B -1	1 - K 3
	113021	1110BA-1	1 - L 3
PILLAR (L). FRONT-INNER	71260	5340A -2	2 - G 5
	71260	5340AA-2	2 - I 5
PILLAR (L). FRONT-OUTER	74120A	5340AA-3	2 - J 5
	74120A	5340A -2	2 - G 5
PILLAR (L). HINGE	71210A	5340AA-2	2 - I 5
	71210A	5340A -2	2 - G 5
PILLAR (L). HINGE-OUTER	74120	5340AA-3	2 - J 5
PILLAR (L. UP.). FRONT-OUTER	71220	5340A -2	2 - G 5
PILLAR (R). FRONT-INNER	70260	5340AA-1	2 - H 5
	70260	5340A -1	2 - F 5
PILLAR (R). FRONT-OUTER	74090A	5340A -2	2 - G 5
	74090A	5340AA-2	2 - I 5
PILLAR (R). HINGE	70210A	5340AA-1	2 - H 5
	70210A	5340A -1	2 - F 5
PILLAR (R). HINGE-OUTER	74090	5340AA-2	2 - I 5
PILLAR (R. UP.). FRONT-OUTER	70220	5340A -1	2 - F 5
PIN	27262	2710 -1	1 - H11
	33698A	3300 -3	1 - G13
	46683	4300 -1	1 - H15
	46785A	4300 -1	1 - H15
	99220	1100BA-1	1 - J 3
	99220	1100B -1	1 - I 3
PIN, CHECKER	58265A	5830AA-1	2 - H12
	58265A	5830A -1	2 - C12
PIN, DOWEL	10203A	1040B -1	1 - G 3
	10203A	1040BA-1	1 - H 3
PIN, DRIVEN GEAR	146231	1400B 1	1 - C 6
	146231	1400BA-1	1 - E 6
PIN, GUIDE	26691	2610 -1	1 - F11
PIN, GUIDE-FRONT CALIPER	33694	3300 -3	1 - G13
PIN, INTER LOCK	17351A	1720A -1	1 - K 7
	17351A	1720 -1	1 - J 7
PIN, INTERIOR MIRROR	69244	6900A -4	3 - F 7
PIN, LOCK	26699	2610 -1	1 - F11
PIN, PAD-FRONT BRAKE	33696A	3300B -2	1 - L13
	33696A	3300A -2	1 - J13
	33696A	3300 -3	1 - G13
PIN, PIVOT-CLUTCH RELEASE FORK	16102	1600A -1	1 - M 6
	16102	1600 -1	1 - L 6
PIN, SNAP	43152	4300 -1	1 - H15
	43152	4600 -1	1 - I16
PIN SPRING	106091	1040BA-1	1 - H 3
	106091	1040B -1	1 - G 3
	10B06	1030B -1	1 - E 3
	10B06	1030BA-1	1 - F 3
PIN, SPRING-STEERING GEAR	32241	3230 -1	1 - M12
PIN, TOP INDICATOR	10503	1040BA-1	1 - H 3
	10503	1040B -1	1 - G 3
PIN, TUBULAR	10309	1040B -1	1 - G 3
	10309	1040BA-1	1 - H 3
PINION	24746A	1840BA-1	1 - I 8
	24746A	1840B -1	1 - H 8
PINION, DIFFERENTIAL	27255	2710A -1	1 - J11
	27255	2710 -1	1 - H11
	27255	2710C -1	1 - L11
PINION, STEERING GEAR	32122C	3220 -1	1 - K12
PIPE	13945Q	6640 -1	2 - H16
	66945	6682 -2	3 - D 3
	67500	6720 -2	3 - H 4
PIPE 'A', CYLINDER	32481B	3220A -1	1 - L12
PIPE 'A', STEERING GEAR	32451	3220A -1	1 - L12
PIPE 'B', STEERING GEAR	32452	3220A -1	1 - L12
PIPE (L). BRAKE-FRONT	43710Z	4360A -1	1 - C16
	43710Z	4360 -1	1 - N15
	45320	4360A -1	1 - C16
	45320	4360 -1	1 - N15
PIPE (L). REAR BRAKE	45370A	4360 -1	1 - N15
	45370A	4360A -1	1 - C16
PIPE (R). BRAKE-FRONT	43710	4360 -1	1 - N15
	43710	4360A -1	1 - C16
	45280	4360 -1	1 - N15
	45280	4360A -1	1 - C16
PIPE (R). REAR BRAKE	45360B	4360 -1	1 - N15
	45360B	4360A -1	1 - C16
PIPE NO. 2		6132A -1	2 - G14
PIPE NO. 2, OIL FILLER	10420	1030BA-1	1 - F 3
PIPE NO. 2, VACUUM	2041X	1380BA-4	1 - N 5
PIPE NO. 4		6132A -1	2 - G14
PIPE NO. 5		6132A -1	2 - G14
PIPE NO. 6		6132A -2	2 - H14
PIPE, AIR	13231A	1310BA-2	1 - E 4
	13705	1380B -3	1 - I 5
	40720	4000BA-1	1 - C15
	40720	4000B -1	1 - L14
	40720B	4000BA-1	1 - C15
PIPE, AIR INTAKE-INTERCOOLER	13240D	1310BA-2	1 - E 4
PIPE, AIR-B.A.C.V. & A.I.H.	133D0	1380B -3	1 - I 5
PIPE, AIR-VALVE ACTUATOR	2041Y	1310BA-3	1 - F 4
PIPE, BRAKE-FRONT	45240B	4360A -1	1 - C16
	45250	4360 -1	1 - N15
	45250	4360A -1	1 - C16
PIPE, BRAKE-REAR	45340	4360A -1	1 - C16
	45350	4360 -1	1 - N15
	45350	4360A -1	1 - C16
	45360A	4360 -1	1 - N15
	45360A	4360A -1	1 - C16

ALPHABETICAL INDEX

PART NAME	D-CODE	SECTION	LOCATION
PIPE. CLUTCH	45510	4140B -1	1 - E15
PIPE. CONNECTOR	13240E	1320B -1	1 - G 4
	13413A	1500B -1	1 - G 6
	13413A	1500BA-1	1 - I 6
PIPE. COOLER		6152A -1	2 - J14
PIPE. COOLER NO 7		6132A -2	2 - H14
PIPE. DELIVERY	132311	1320B -1	1 - G 4
	132311	1320BA-1	1 - I 4
PIPE DIPSTICK	10325	1030B -1	1 - E 3
	10325	1030BA-1	1 - F 3
PIPE DRAIN-REAR FENDER	56761C	5340A -1	2 - F 5
PIPE EVAPORATION	42531	4200 -1	1 - G15
	45711	4500BA-1	1 - H16
	45711	4500B -1	1 - G16
	45712	4500BA-1	1 - H16
PIPE. EVAPORATION-FRONT	45720	4500BA-1	1 - H16
	45720	4500B -1	1 - G16
PIPE. EVAPORATOR	45712	4500B -1	1 - G16
PIPE EXHAUST-FRONT	40050A	4000BA-1	1 - C15
PIPE FILLER	42210	4200 -1	1 - G15
PIPE FILLER NO 2	42290	4200 -1	1 - G15
PIPE. FILLER-WASHER TANK	674C0	6720 -2	3 - H 4
PIPE. FUEL-MAIN	45111	4500BA-1	1 - H16
	45111	4500B -1	1 - G16
PIPE. FUEL-RETURN	45611	4500B -1	1 - G16
	45611	4500BA-1	1 - H16
PIPE. HEATER	61220	6100 -1	2 - N13
PIPE. HEATER UNIT	76406D	6110 -1	2 - C14
PIPE MIDDLE	40110A	4000BA-1	1 - C15
	40110A	4000B -1	1 - L14
PIPE. OIL	19920	1910 -1	1 - K 8
	19930	1910 -1	1 - K 8
PIPE. OIL FILLER	10410	1030B -1	1 - E 3
	10410	1030BA-1	1 - F 3
PIPE. OIL INLET	136401	1310BA-2	1 - E 4
	136551	1310BA-2	1 - E 4
PIPE OIL OUTLET	136351	1310BA-2	1 - E 4
	14260A	1040BA-1	1 - H 3
PIPE. PEDAL	43061A	4300 -1	1 - H15
PIPE. REAR WASHER-LOWER	67500A	6750 -1	3 - K 4
PIPE REAR WASHER-UPPER	67500B	6750 -1	3 - K 4
PIPE RETURN	32480	3240 -2	1 - D13
PIPE. SCREEN WASHER	67511J	6720 -2	3 - H 4
PIPE. VACUUM	13650	1380BA-3	1 - M 5
	13650	1380B -3	1 - I 5
	19910	1910 -1	1 - K 8
	43830	4340A -2	1 - M15
	43830	4340 -2	1 - K15
	43840C	4340 -2	1 - K15
	43840C	4340A -2	1 - M15
	43850	4340 -2	1 - K15
	43850	4340A -2	1 - M15
PIPE. VANE PUMP	32630B	3240 -2	1 - D13
PIPE VINYL	67480J	6720 -2	3 - H 4
PIPE WATER INTAKE-TURBO CHARGER	13530A	1310BA-2	1 - E 4
PIPE WATER OUTLET-TURBO CHARGER	13540C	1310BA-2	1 - E 4
PIPE-FUEL	13422	1320BA-1	1 - I 4
	13422	1320B -1	1 - G 4
PIPE-NO 1	32410B	3240 -2	1 - D13
PISTON ACCUMULATOR	21271	1920 -2	1 - M 8
PISTON BAND SERVO	19381	1920 -1	1 - L 8
PISTON CALIPER-REAR	26660	2610 -1	1 - F11
PISTON CLUTCH	19480	1930 -1	1 - E 9
PISTON. FRONT CALIPER	33651	3300B -2	1 - L13
	33651	3300A -2	1 - J13
	33651	3300 -3	1 - G13
PISTON. LOW & REVERSE	19601	1940 -1	1 - H 9
PISTON. O W VALVE	41422A	4140B -1	1 - E15
PLATE	115011	1100B -1	1 - I 3
	115011	1100BA-1	1 - J 3
	34088A	2800A -1	1 - C12
	43090	4300 -1	1 - H15
	50902A	5180 -2	2 - J 4
PLATE & ROTOR, FRONT		6142A -1	2 - I14
PLATE 'A' (L), CLOSING-FRONT	54745	5370A -1	2 - M 5
	54745	5370 -1	2 - L 5
PLATE 'A' (L), CLOSING-REAR	54755	5370 -1	2 - L 5
	54755	5370A -2	2 - N 5
PLATE 'A' (R), CLOSING-FRONT	53745	5370 -1	2 - L 5
	53745	5370A -1	2 - M 5
PLATE 'A' (R), CLOSING-REAR	53755	5370A -1	2 - M 5
	53755	5370 -1	2 - L 5
PLATE 'B' (L), CLOSING-FRAME	54790B	5370 -1	2 - L 5
PLATE 'B' (R), CLOSING-FRAME	53790C	5370 -1	2 - L 5
PLATE 'C' (L), CLOSING-FRAME	54795	5370 -1	2 - L 5
	54795	5370A -2	2 - N 5
PLATE 'C' (R), CLOSING-FRAME	53795	5370A -1	2 - M 5
	53795	5370 -1	2 - L 5
PLATE (C), SET-REAR BUMPER	50350A	5010A -1	2 - G 3
PLATE ", L), CLOSING	54290	5320 -1	2 - C 5
	54290	5320B -1	2 - D 5
PLATE (FRT., R), CLOSING	53290	5320B -1	2 - D 5
	53290	5320 -1	2 - C 5
PLATE (L), CORNER	71441	5340AA-2	2 - I 5
PLATE (L), END	71114	5340A -1	2 - F 5
PLATE (L), FIXING-SIDE SILL	71272A	5340AA-2	2 - I 5
PLATE (L), FRONT SCUFF	68711Z	6840AB-1	3 - J 5
	68711Z	6840A -1	3 - F 5
PLATE (L), REAR CORNER-INNER	71160	5340AA-2	2 - I 5
PLATE (L), SEAL	71113	5340AA-2	2 - I 5
PLATE (L), SEAL-CLOSING	56181F	5320B -1	2 - D 5
	56181F	5320 -1	2 - C 5
PLATE (L), SEAL-REAR SIDE FRAME	54731	5370A -1	2 - M 5
PLATE (L), SEAL-RR SIDE FRAME	54731	5370 -1	2 - L 5
PLATE (L), SET-FRONT BUMPER	50120	5000 -1	2 - E 3
	50190	5000 -1	2 - E 3
PLATE (L), SET-FRONT FASCIA	5005YA	5000 -1	2 - E 3
PLATE (L), SET-REAR BUMPER	50370A	5010A -1	2 - G 3
	50390C	5010A -1	2 - G 3
PLATE (R), CORNER	70440	5340AA-2	2 - I 5
PLATE (R), END	70114	5340A -1	2 - F 5
PLATE (R), FIXING-SIDE SILL	70272A	5340AA-1	2 - H 5
PLATE (R), FRONT SCUFF	68711	6840AB-1	3 - J 5
	68711	6840A -1	3 - F 5
PLATE (R), REAR CORNER-INNER	70160	5340AA-1	2 - H 5
PLATE (R), SEAL	70113A	5340AA-1	2 - H 5
PLATE (R), SEAL-CLOSING	56182	5320 -1	2 - C 5
	56182	5320B -1	2 - D 5
PLATE (R), SEAL-REAR SIDE FRAME	53731	5370A -1	2 - M 5
PLATE (R), SEAL-RR SIDE FRAME	53731	5370 -1	2 - L 5
PLATE (R), SET-FRONT BUMPER	50110C	5000 -1	2 - E 3
	50180H	5000 -1	2 - E 3
PLATE (R), SET-FRONT FASCIA	5005Y	5000 -1	2 - E 3
PLATE (R), SET-REAR BUMPER	50360A	5010A -1	2 - G 3
	50360B	5010A -1	2 G 3
PLATE (RR , L), CLOSING	54222	5320B -1	2 - D 5
	54222	5320 -1	2 - C 5
PLATE (RR , R), CLOSING	53222	5320B -1	2 - D 5
	53222	5320 -1	2 - C 5
PLATE (UP.), SET-FASCIA	53180	5310A -1	2 - N 4
	53180	5310 1	2 - M 4
PLATE (UP , L), COWL SIDE-OUTER	54592	5340AA-1	2 - H 5
	54592	5340A -1	2 - F 5
PLATE (UP., R), COWL SIDE-OUTER	53592	5340A -1	2 - F 5
	53592	5340AA-1	2 - H 5
PLATE NO. 1, PRINT	55442	5540 -1	2 - M 6
	55442	5540A -1	2 - C 7
	55442	5540B -1	2 - E 7
PLATE NO. 1, SEAL		6152A -1	2 - J14
PLATE NO. 2, SEAL		6152A -1	2 - J14
PLATE SET	34088	3400A -1	1 - N13
PLATE SET, REAR DAMPER	28020	2800B -1	1 - D12
	28020	2800 -1	1 - N11
	28020	2800A -1	1 - C12
PLATE, ABSORBER	133801	1310B -1	1 - C 4
PLATE, BACKING	19025	1910 -1	1 - K 8
PLATE, BAFFLE	14331	1400BA-1	1 - E 6
PLATE, BAFFLE-DIFFERENTIAL CASING	27609	2710 -2	1 - I11
	27609	2710C -2	1 - M11
	27609	2710A -2	1 - K11
PLATE, CAM	28390B	2830 -1	1 - F12
PLATE, CAUTION	69021A	6930 -1	3 - H 7
PLATE, CAUTION-DIFFERENTIAL	27017	2710A -1	1 - J11
	27017	2710C -1	1 - L11
PLATE, CLAMP	32133	3220 -1	1 - K12
	32133	3220A -1	1 - L12
	32134	3220 -1	1 - K12
	32134	3220A -1	1 - L12
PLATE, COATING-SHAFT	32157	3210A -1	1 - J12
	32157	3210 -1	1 - I12
PLATE, CONTACT	32016C	3200 -1	1 - H12
	32017A	3200 -1	1 - H12
PLATE, DISC	26251B	2610 -1	1 - F11
PLATE, DISHED	19498	1930 -1	1 - E 9
	19498A	1930 -1	1 - E 9
	1960B	1940 -1	1 - H 9
PLATE, DRAIN PLUG-UNDER COVER	17373A	1700A -1	1 - C 7
PLATE, DRIVE	19020	1910 -1	1 - K 8
	19500B	1930 -1	1 - E 9
	19610	1940 -1	1 - H 9
PLATE, DRIVEN	19499	1930 -1	1 - E 9
	19609	1940 -1	1 - H 9
PLATE, EARTH-MOTOR ANTENNA	6643Y	6682 -3	3 - E 3
PLATE, FIXING	70630B	5360A -1	2 - K 5
PLATE, FLASHER-CPU	67564	6630 -1	2 - F16
PLATE, FRICTION	27258	2710A -1	1 - J11
	27258	2710C -1	1 - L11
PLATE, GUARD-CALIPER BRAKE	26285	2610 -1	1 - F11
PLATE, HOLDER-BRUSH	76612	6740 -1	3 - J 4
	76612A	6760 -1	3 - L 4
PLATE, HUB-DISK	33251B	3300A -2	1 - J13
	33251B	3300B -2	1 - L13
	33251B	3300 -3	1 - G13
PLATE, LAMP CHECK-CPU	67563	6630 -1	2 - F16
PLATE, LIGHT GUIDE-METER	55489A	5540A -1	2 - C 7
	55489A	5540 -1	2 - M 6
	55489A	5540B -1	2 - E 7
PLATE, LOCATING	13186A	1300B -1	1 - M 3
PLATE, LOCK	27302	2710A -1	1 - J11
	27302	2710C -1	1 - L11
	27302	2710 -1	1 - H11
	69762	6845 -1	3 - K 5
	V0636	7900 1	3 - L 7
PLATE, MAIN-CPU	67562B	6630 -1	2 - F16
PLATE, MANUAL	19440	1950 -1	1 - I 9
PLATE, MAT SET	68696	6860AA-2	3 - D 6
	68696	6860A -3	3 - N 5
PLATE, MIDDLE	141181	1400BA-1	1 - E 6

ALPHABETICAL INDEX

PART NAME	D-CODE	SECTION	LOCATION
PLATE, MIDDLE	141181	1400B -1	1 - C 6
PLATE, MIXING	132611	1320BA-1	1 - I 4
PLATE, MODEL	69011	6930 -1	3 - H 7
PLATE, MOUNTING-REAR DAMPER	28050	2800A -1	1 - C12
	28050	2800 -1	1 - N11
	28050	2800B -1	1 - D12
PLATE, RETAINER	19667	1940 -1	1 - H 9
PLATE, RETAINING	129506	1930 -1	1 - E 9
	19503	1930 -1	1 - E 9
	19506A	1930 -1	1 - E 9
	19613	1940 -1	1 - H 9
	19702	1950 -1	1 - I 9
PLATE, SEAL RADIATOR SHROUD	56963B	5310A -1	2 - N 4
PLATE, SEAL-FRONT BUMPER	50071	5000 -1	2 - E 3
PLATE, SEAL-RADIATOR SHROUD	56963B	5310 -1	2 - M 4
PLATE, SEAT BELT SET	57985	5790A -1	2 - H11
PLATE, SEPARATOR	19805	1925 -1	1 - C 9
PLATE, SET	32041	3200 -1	1 - H12
PLATE, SET-FASCIA	53170B	5310 -1	2 - M 4
	53170B	5310A -1	2 - N 4
PLATE, SET-HINGE BRACKET	R1916	5340AA-3	2 - J 5
PLATE, SET-HOLDER	52519	5230 -1	2 - K 4
PLATE, SET-HOOD REAR	R1240	6330A -1	2 - E15
PLATE, SHROUD-UPPER	53150	5310 -1	2 - M 4
	53150	5310A -1	2 - N 4
PLATE, SIDE 'A'	19793	1925 -1	1 - C 9
PLATE, SIDE 'B'	19803	1925 -1	1 - C 9
PLATE, SIDE 'D'	19781	1925 -1	1 - C 9
PLATE, STABILIZER	28103	2810 -1	1 - E12
	34155	3410 -1	1 - D14
PLATE, THRUST	115041	1100BA-1	1 - J 3
	115041	1100B -1	1 - I 3
PLATE, UPPER	64340	5570 -1	2 - I 7
PLATE, WATER BAFFLE	15125	1500B -1	1 - G 6
	15125	1500BA-1	1 - I 6
PLATE, WINDOW	55446A	5540 -1	2 - M 6
PLAYER, COMPACT DISC	66AG0	6680 -4	2 - L16
PLUG		6142A -1	2 - I14
	14274	1040BA-1	1 - H 3
	14274	1040B -1	1 - G 3
	56241B	5390 -2	2 - D 6
PLUG 'A', BLIND-SIDE SPOILER	519A1	7800 -1	3 - K 7
PLUG 'B', BLIND-SIDE SPOILER	519A2	7800 -1	3 - K 7
PLUG SET, SPARK	18110S	1800BA-2	1 - D 8
	18110S	1800B -2	1 - M 7
PLUG, 2-3 SHIFT	19789	1925 -1	1 - C 9
PLUG, 3-4 SHIFT	21683	1925 -2	1 - D 9
PLUG, ACCUMULATOR	21273	1920 -2	1 - M 8
PLUG, BLIND	10205A	1040B -1	1 - G 3
	10205A	1040BA-1	1 - H 3
	102061	1040B -1	1 - G 3
	102061	1040BA-1	1 - H 3
	102071	1040BA-1	1 - H 3
	102071	1040B -1	1 - G 3
	16241	1600 -1	1 - L 6
PLUG, CAP	17441B	1720A -1	1 - K 7
PLUG, CORNER SEAL	113221	1110BA-1	1 - L 3
	113221	1110B -1	1 - K 3
PLUG, DRAIN	10404	1040BA-1	1 - H 3
	10404	1040B -1	1 - G 3
	42046	4200 -1	1 - G15
	56052	5390A -2	2 - F 6
	56052	5390 -2	2 - D 6
	56112B	5390 -2	2 - D 6
	56112B	5390A -2	2 - F 6
	56241	5830A -1	2 - C12
	56241	5830AA-1	2 - H12
	56241	6130 -1	2 - F14
	56241J	5390A -2	2 - F 6
	56241J	5390 -2	2 - D 6
	56242	5390A -2	2 - F 6
	56242	5390 -2	2 - D 6
PLUG, DRAIN-VENTILATION HOSE	42565	4200 -1	1 - G15
PLUG, HOLE	56054	5390A -2	2 - F 6
	61031	6130 -1	2 - F14
PLUG, HOLE-HATCH FRAME-LOWER	62869	6230 -1	2 - L14
	628A1	6230 -2	2 - M14
PLUG, HOLE-HATCH FRAME-UPPER	62868	6230 -1	2 - L14
PLUG, HOLE-LAMP & WIPER HARNESS	62626	6230 -1	2 - L14
PLUG, JET	103272	1030B -1	1 - E 3
	103272	1030BA-1	1 - F 3
PLUG, MAGNET	17121C	1700A -1	1 - C 7
	17122	1700A -1	1 - C 7
	17122	1700 -1	1 - N 6
	17122	2710 -1	1 - H11
	17122	2710C -1	1 - L11
	17122	2710A -1	1 - J11
PLUG, OIL JET	114111	1100BA-1	1 - J 3
	114111	1100B -1	1 - I 3
PLUG, PINION	32129B	3220 -1	1 - K12
	32129B	3220A -1	1 - L12
PLUG, REGULATOR	19774	1925 -1	1 - C 9
PLUG, SERVICE COVER	58868E	4360 -1	1 - N15
	58868E	5105 -1	2 - M 3
PLUG, SOCKET	10415	1030B -1	1 - E 3
	10415	1030BA-1	1 - F 3
PLUG, SPARK	18110	1800BA-2	1 - D 8
	18110	1800B -2	1 - M 7
PLUG, SQUARE HEAD	19331	1920 -1	1 - L 8
PLUNGER, CONTROL	14115	1040BA-1	1 - H 3
	14115	1040B -1	1 - G 3
	14115	1400B -1	1 - C 6
	14115	1400BA-1	1 - E 6
POCKET (L), DOOR TRIM	68433Z	5840AB-2	2 - L13
	68433Z	5840A -6	2 - H13
POCKET (R), DOOR TRIM	68433	5840AB-2	2 - L13
	68433	5840A -6	2 - H13
POLE, ANTENNA	66941	6682 -2	3 - D 3
PRESSURE REGULATOR, FUEL	13280A	1320B -1	1 - G 4
	13280A	1320BA-1	1 - I 4
PROTECTOR	107351	6600B -2	2 - H15
	107351	6600BA-2	2 - K15
	13428	1320BA-1	1 - I 4
	13428	1320B -1	1 - G 4
	13428A	1320B -1	1 - G 4
	13428A	1320BA-1	1 - I 4
	14743	1500BA-1	1 - I 6
	14743	1500B -1	1 - G 6
	14746	1500BA-1	1 - I 6
	14746	1500B -1	1 - G 6
	43301	4300 -1	1 - H15
	51168	5110A -1	2 - C 4
	51966	7800 -1	3 - K 7
	60721	6610 -1	2 - M15
	67058A	6700 -1	3 - G 3
PROTECTOR 'A' (L), SIDE	50991Y	5060A -1	2 - J 3
PROTECTOR 'A' (R), SIDE	50991A	5060A -1	2 - J 3
PROTECTOR 'B' (L), SIDE	50992Y	5060A -1	2 - J 3
PROTECTOR 'B' (R), SIDE	50992A	5060A -1	2 - J 3
PROTECTOR 'C' (L), SIDE	50993Y	5060A -1	2 - J 3
PROTECTOR 'C' (R), SIDE	50993A	5060A -1	2 - J 3
PROTECTOR 'D' (L), SIDE	50994Y	5060A -1	2 - J 3
PROTECTOR 'D' (R), SIDE	50994A	5060A -1	2 - J 3
PROTECTOR 'E' (L), SIDE	50995Y	5060A -1	2 - J 3
PROTECTOR 'E' (R), SIDE	50995A	5060A -1	2 - J 3
PROTECTOR (L), DOOR SASH	58877Z	5800AA-1	2 - K11
PROTECTOR (L), REAR COMBINATION	51171Z	5110A -1	2 - C 4
PROTECTOR (L), RETRACTABLE	51421A	5103 -1	2 - L 3
PROTECTOR (L), SPLASH	71118	5340AA-2	2 - I 5
	71118	5340A -2	2 - G 5
PROTECTOR (R), DOOR SASH	58877	5800AA-1	2 - K11
PROTECTOR (R), REAR COMBINATION	51171	5110A -1	2 - C 4
PROTECTOR (R), RETRACTABLE	51411B	5103 -1	2 - L 3
PROTECTOR (R), SPLASH	70118	5340A -1	2 - F 5
	70118	5340AA-1	2 - H 5
PROTECTOR NO 2	40820	4000B -2	1 - M14
PROTECTOR, AIR HOSE	13815D	4000B -1	1 - L14
PROTECTOR, CONVERTER	40860	4000BA-2	1 - D15
	40860	4000B -2	1 - M14
	40862	4000B -2	1 - M14
	40862	4000BA-2	1 - D15
PROTECTOR, COWL GRILLE	50781	5180 -2	2 - J 4
PROTECTOR, EVAPORATION HOSE	45732	4500BA-1	1 - H16
PROTECTOR, EVAPORATION HOSE-FRONT	45722	4500BA-1	1 - H16
PROTECTOR, FRONT PIPE	40811	4000BA-1	1 - C15
PROTECTOR, FUEL HOSE	45146	1320B -2	1 - H 4
	45146	1320BA-2	1 - J 4
	45146	4500BA-1	1 - H16
	45145	4500B -1	1 - G16
PROTECTOR, HANGER BRACKET	40815E	4000B -2	1 - M14
	40815E	4000BA-1	1 - C15
PROTECTOR, HOOD	50655	5230 -1	2 - K 4
	507M1	5230 -1	2 - K 4
PROTECTOR, HOSE-FLUID	13A63	1350B -1	1 - M 4
	13A63	1350BA-1	1 - N 4
PROTECTOR, HOSE-SUB TANK	15382	1500B -2	1 - H 6
	15382	1500BA-2	1 - J 6
PROTECTOR, LICENSE	50180E	5000 -1	2 - E 3
PROTECTOR, MIDDLE PIPE-LOW	40844	4000B -2	1 - M14
PROTECTOR, MIDDLE PIPE-LOWER	40844	4000BA-1	1 - C15
PROTECTOR, REAR FINISHER	50855A	5180 -2	2 - J 4
	50855G	5180 -2	2 - J 4
PROTECTOR, SPONGE-AIR HOSE	13887	1380B -3	1 - I 5
PROTECTOR, SPONGE-WATER HOSE	13887A	1380BA-3	1 - M 5
PROTECTOR, STOP LAMP-HIGH MOUNTED	51589	5110A -2	2 - D 4
PULLEY	24530	1830B -1	1 - F 8
	24530	1830BA-1	1 - G 8
PULLEY AIR PUMP	237131	1371BA-1	1 - F 5
	237131	1371B -1	1 - E 5
PULLEY, CRANKSHAFT	11371	1100B -1	1 - I 3
	11371	1100BA-1	1 - J 3
PULLEY, IDLE	15940	1580B -1	1 - K 6
PULLEY, IDLER		6142A -1	2 - I14
PULLEY, VANE PUMP	32601	3240 -2	1 - D13
PULLEY, WATER PUMP	15131	1500BA-1	1 - I 6
	15131	1500B -1	1 - G 6
PUMP SET, WATER	15010S	1500BA-1	1 - I 6
	15010S	1500B -1	1 - G 6
PUMP, AIR	13810	1371B -1	1 - E 5
	13810	1371BA-1	1 - F 5
PUMP, FUEL	13350	1320B -1	1 - G 4
	13350	1320BA-1	1 - I 4
PUMP, METERING OIL	146001	1400B -1	1 - C 6
	146001	1400BA-1	1 - E 6
PUMP, OIL	14100	1400BA-1	1 - E 6
	14100	1400B -1	1 - C 6
	19220	1910 -1	1 - K 8
PUMP, VANE	32600	3240 -2	1 - D13

ALPHABETICAL INDEX

PART NAME	D-CODE	SECTION	LOCATION
PUMP, WASHER	76672	6720 -2	3 - H 4
	76672	6750 -1	3 - K 4
PUMP, WATER	15010	1500BA-1	1 - I 6
	15010	1500B -1	1 - G 6
* * * R * * *			
RACE, BEARING	19639A	1930 -2	1 - F 9
RACE, BEARING HUB CLUTCH	21631	1930 -3	1 - G 9
RACE, BEARING OIL DISTRIBUTOR	19656	1930 -2	1 - F 9
	19656	1940 -1	1 - H 9
RACE, BEARING PUMP COVER	19631	1930 -2	1 - F 9
RACE, INNER	17275	1710 -1	1 - D 7
	17275	1710A -1	1 - G 7
	17275B	1710A -1	1 - G 7
	19336	1920 -1	1 - L 8
RACE, OUTER	19593	1940 -1	1 - H 9
RACE, SHELL BEARING	19566	1930 -2	1 - F 9
RACK, STEERING GEAR	32119E	3220A -1	1 - L12
	32119E	3220 -1	1 - K12
RADIATOR	15200	1500BA-1	1 - I 6
	15200	1500B -2	1 - H 6
RAIL (L), GUIDE	69832Z	6330 -1	2 - C15
RAIL (L), RAIN	71311	5340AA-2	2 - I 5
	71311	5340A -2	2 - G 5
RAIL (L), ROOF-INNER	71050	5340A -1	2 - F 5
RAIL (L), ROOF-OUTER	71250	5340A -2	2 - G 5
RAIL (R), GUIDE	69832	6330 -1	2 - C15
RAIL (R), RAIN	70311	5340AA-1	2 - H 5
	70311	5340A -1	2 - F 5
RAIL (R), ROOF-INNER	70050	5340A -1	2 - F 5
RAIL (R), ROOF-OUTER	70250	5340A -1	2 - F 5
RECEIVER DRIER		6132A -1	2 - G14
RECTIFIER	24510	1830B -1	1 - F 8
	24510	1830BA-1	1 - G 8
REGULATOR	24520	1830BA-1	1 - G 8
	24520	1830B -1	1 - F 8
REGULATOR (L), WINDOW	58560Z	5830AA-2	2 - I12
	58560Z	5830A -4	2 - F12
REGULATOR (R), WINDOW	58560	5830A -4	2 - F12
	58560	5830AA-2	2 - I12
REGULATOR, PRESSURE	142501	1400B -1	1 - C 6
	142501	1400BA-1	1 - E 6
REINFORCEMENT 'A' (L), FRONT FLOOR	54603	5370A -1	2 - M 5
REINFORCEMENT 'A' (L), RADIATOR SHROUD	54101	5310A -1	2 - N 4
REINFORCEMENT 'A' (R), FRONT FLOOR	53603	5370A -1	2 - M 5
REINFORCEMENT 'A' (R), RADIATOR SHROUD	53101	5310A -1	2 - N 4
REINFORCEMENT 'B' (L), FRONT FLOOR	54606	5370A -1	2 - M 5
REINFORCEMENT 'B' (L), RADIATOR	54102	5310A -1	2 - N 4
REINFORCEMENT 'B' (R), FRONT FLOOR	53606	5370A -1	2 - M 5
REINFORCEMENT 'B' (R), RADIATOR SHROUD	53102	5310A -1	2 - N 4
REINFORCEMENT 'C' (L), FRONT FLOOR	54607	5370A -1	2 - M 5
REINFORCEMENT 'C' (L), RADIATOR	54103	5310A -1	2 - N 4
REINFORCEMENT 'C' (R), FRONT FLOOR	53607	5370A -1	2 - M 5
REINFORCEMENT (L), ABS-APRON	54225	5320 -1	2 - C 5
REINFORCEMENT (L), COWL SIDE PANEL	54287	5340A -1	2 - F 5
	54287	5340AA-1	2 - H 5
REINFORCEMENT (L), COWL SIDE-INNER	54289	5340AA-1	2 - H 5
	54289	5340A -1	2 - F 5
REINFORCEMENT (L), FRONT PILLAR-INNER	54561	5340AA-1	2 - H 5
REINFORCEMENT (L), NO 3 MEMBER-UPPER	54917	5370A -2	2 - N 5
REINFORCEMENT (L), QUARTER PANEL-REAR	71169	5340AA-2	2 - I 5
REINFORCEMENT (L), RADIATOR SHROUD	54131	5310 -1	2 - M 4
REINFORCEMENT (L), RR COMB LAMP-LWR	51176B	5110A -1	2 - C 4
REINFORCEMENT (L), RR COMB LAMP UP	51175B	5110A -1	2 - C 4

PART NAME	D-CODE	SECTION	LOCATION
REINFORCEMENT (L), SIDE SILL	71276	5340A -2	2 - G 5
	71277	5370A -2	2 - N 5
REINFORCEMENT (L), STRIKER	71390B	5340AA-2	2 - I 5
REINFORCEMENT (L), WHEEL APRON	5359XZ	5320B -1	2 - D 5
REINFORCEMENT (LOWER), FINISHER-REAR	50854F	5180 -2	2 - J 4
REINFORCEMENT (R), ABS-APRON	53225	5320 -1	2 - C 5
REINFORCEMENT (R), COWL SIDE PANEL	53287	5340A -1	2 - F 5
	53287	5340AA-1	2 - H 5
REINFORCEMENT (R), COWL SIDE-INNER	53289	5340A -1	2 - F 5
	53289	5340AA-1	2 - H 5
REINFORCEMENT (R), FRONT PILLAR-INNER	53561	5340AA-1	2 - H 5
REINFORCEMENT (R), NO. 3 MEMBER-UPPER	53917	5370A -1	2 - M 5
REINFORCEMENT (R), QUARTER PANEL-REAR	70169	5340AA-1	2 - H 5
REINFORCEMENT (R), RADIATOR	53131	5310 -1	2 - M 4
REINFORCEMENT (R), RR. COMB. LAMP-LWR.	51176A	5110A -1	2 - C 4
REINFORCEMENT (R), RR. COMB. LAMP-UP.	51175A	5110A -1	2 - C 4
REINFORCEMENT (R), SIDE SILL	70276	5340A -1	2 - F 5
	70277	5370A -2	2 - N 5
REINFORCEMENT (R), STRIKER	70390B	5340AA-1	2 - H 5
REINFORCEMENT (R), WHEEL APRON	5359X	5320B -1	2 - D 5
REINFORCEMENT (UPPER), FINISHER-REAR	50853D	5180 -2	2 - J 4
REINFORCEMENT LOCK-REAR END PANEL	56891A	5340AA-1	2 - H 5
REINFORCEMENT, BUMPER	50040	5000 -1	2 - E 3
	50230	5010A -1	2 - G 3
REINFORCEMENT, CROSS MEMBER NO. 3-UPPER	53910B	5370A -1	2 - M 5
REINFORCEMENT, JOINT HOSE-FUEL	42285	4200 -1	1 - G15
REINFORCEMENT, ROOF	70660	5360A -1	2 - K 5
REINFORCEMENT, SPARE TIRE	5392X	5370A -1	2 - M 5
REINFORCEMENT, TUNNEL-FRONT	53612	5370A -1	2 - M 5
REINFORCEMENT, TUNNEL-REAR	53918	5370A -1	2 - M 5
RELAY		6132A -1	2 - G14
		6152A -1	2 - J14
	51939	5103 -1	2 - L 3
	61690	5120 -1	2 - E14
	61691	6120 -1	2 - E14
RELAY & COVER	67740Z	6630 -1	2 - F16
RELAY & COVER, NORMAL CLOSE	67740X	6600BA-3	2 - L15
	67740X	6600B -3	2 - I15
RELAY & COVER, NORMAL OPEN	67740Y	3240 -2	1 - D13
	67740Y	6600B -3	2 - I15
RELAY & COVER, NORMALLY CLOSE	67740X	6630 -1	2 - F16
RELAY & COVER, NORMALLY OPEN	67740Y	6630 -1	2 - F16
RELAY, CIRCUIT OPEN	18821	6600B -2	2 - H15
	18821	6600BA-2	2 - K15
RELAY, MAIN	18811	6600B -2	2 - H15
	18811	6600BA-2	2 - K15
RELAY, MAIN-A.B.S	437C0	4370 -2	1 - E16
RELAY, MOTOR-ANTENNA	66A3X	6682 -3	3 - E 3
RELAY, MOTOR-HYDRAULIC UNIT	437A2	4370 -2	1 - E16
RELAY, N.C	677402	6600BA-3	2 - L15
	677402	6600B -3	2 - I15
	677402	6630 -1	2 - F16
RELAY, N.O.	677403	3240 -2	1 - D13
	677403	6630 -1	2 - F16
RELAY, SUNROOF	67740P	6330 -1	2 - C15
	69857B	6330 -1	2 - C15
RELAY, TRANSFER	677404	6630 -1	2 - F16
RELAY, VALVE-HYDRAULIC UNIT	437A3	4370 -2	1 - E16
REPAIR KIT	49720	4340 -2	1 - K15
	49720	4340A -2	1 - M15
RESISTOR	18831	6600BA-2	2 - K15
	18831	6600B -2	2 - H15
RESISTOR, BLOWER UNIT	76433	6120 -1	2 - E14
RESISTOR, SOLENOID-FUEL PUMP	18831A	6600B -2	2 - H15
	18831A	6600BA-2	2 - K15

PART NAME	D-CODE	SECTION	LOCATION
RESISTOR, VARIABLE	13790B	1330BA-1	1 - L 4
	13790B	1330B -1	1 - K 4
REST (L), ARM	69371Z	5840AB-3	2 - M13
REST (R), ARM	69371	5840A -7	2 - I13
	69371	5840AB-3	2 - M13
	69371Z	5840A -7	2 - I13
REST, FOOT	43041	4300 -1	1 - H15
RESTRAINT, HEAD	88104A	5700A -4	2 - F 8
	88104A	5700AA-9	2 - K 9
	88104A	5700AC-3	2 - H10
	88104A	5700AB-2	2 - D10
RETAINER	19704	1950 -1	1 - I 9
RETAINER (C), FORMING BAR	R1911	6330A -1	2 - E15
RETAINER (L), FORMING BAR	R1913	6330A -1	2 - E15
RETAINER (L), ROOF PANEL	R1940	6330A -2	2 - F15
RETAINER (R), FORMING BAR	R1912	6330A -1	2 - E15
RETAINER (R), ROOF PANEL	R1930	6330A -2	2 - F15
RETAINER, ACCELERATOR ROD	41650E	4160 -1	1 - F15
RETAINER, FRONT BUMPER	50122A	5000 -1	2 - E 3
RETAINER, LOCK CYLINDER	58495A	5830A -4	2 - F12
	58495A	5830AA-2	2 - I12
	62495	0900A -1	2 - C 3
RETAINER, SERVO	19391	1920 -1	1 - L 8
	21391	1920 -2	1 - M 8
RETAINER, SPRING	19487	1930 -1	1 - E 9
RETAINER, SPRING-PISTON STEM	19406	1920 -2	1 - M 8
RETAINER, T-STAT		6152A -1	2 - J14
RIBBON, FRONT BUMPER	50311D	5000 -1	2 - E 3
RING	15174A	1500B -1	1 - G 6
	15174A	1500BA-1	1 - I 6
	19676	1940 -1	1 - H 9
RING 'A', SNAP-LOWER UNIT	699W4	6330 -2	2 - D15
RING 'B', SNAP-LOWER UNIT	699W8	6330 -2	2 - D15
RING 'C', SPROCKET-REGULATOR	58584	5830A -4	2 - F12
RING (L) MOUNTING	87015	5100 -1	2 - K 3
RING (R) MOUNTING	87014	5100 -1	2 - K 3
RING, BACK-UP	32153	3220A -1	1 - L12
RING, ILLUMINATION	66251	6610 -1	2 - M15
RING, PRESSURE	27265	2710C -1	1 - L11
	27265	2710A -1	1 - J11
RING, PUSH-DUST SEAL	55424B	5520 -1	2 - K 6
RING, RETAINING	17613	1710A -2	1 - H 7
	26139	2600 -1	1 - E11
	66024	5100 -1	2 - K 3
RING, RETAINING-BALL BEARING	17305A	1710 -2	1 - E 7
	17305A	1710A -2	1 - H 7
RING, RETAINING-CLUTCH HUB	17626A	1710 -2	1 - E 7
	17626A	1710A -2	1 - H 7
RING, SEAL	19256	1920 -1	1 - L 8
	19257	1920 -1	1 - L 8
	19655	1940 -1	1 - H 9
RING, SNAP		6142A -1	2 - I14
	141131	1400B -1	1 - C 6
	141131	1400BA-1	1 - E 6
	17225	1710A -1	1 - G 7
	17225	1710 -1	1 - D 7
	17306A	1710A -2	1 - H 7
	17641D	1710A -3	1 - I 7
	19399	1920 -1	1 - L 8
	19449	1950 1	1 - I 9
	19488	1930 -1	1 - E 9
	19509	1930 -1	1 - E 9
	19534	1930 -2	1 - F 9
	19534	1940 -1	1 - H 9
	19534B	1930 2	1 - F 9
	19567	1930 -2	1 - F 9

ALPHABETICAL INDEX

PART NAME	D-CODE	SECTION	LOCATION
RING, SNAP	19594	1940 -1	1 - H 9
	19596	1940 -1	1 - H 9
	19598	1930 -2	1 - F 9
	19607	1940 -1	1 - H 9
	19619	1940 -1	1 - H 9
	21567	1930 -3	1 - G 9
	58586	5830A -4	2 - F12
RING, SNAP-PISTON STEM-LOWER	19403	1920 -2	1 - M 8
RING, SNAP-PISTON STEM-UPPER	19404	1920 -2	1 - M 8
RING, SQUARE	101711	1030BA-1	1 - F 3
	101711	1030B -1	1 - E 3
RING, SQUARE-OUTER	10172A	1030B -1	1 - E 3
	10172A	1030BA-1	1 - F 3
RING, STOPPER	88336	5700A -8	2 - J 8
	88336	5700AC-4	2 - I10
	88336	5700AA-12	2 - N 9
	88336	5700AB-3	2 - E10
RING, SYNCHRONIZER	17265	1710A -1	1 - G 7
	17265	1710 -1	1 - D 7
	17265A	1710A -1	1 - G 7
	17265B	1710A -1	1 - G 7
	17725A	1710 -3	1 - F 7
	17725A	1710A -3	1 - I 7
	17725C	1710A -3	1 - I 7
	17725C	1710 -3	1 - F 7
RING, THRUST WASHER	17652	1710A -3	1 - I 7
	17652	1710 -2	1 - E 7
RIVET	67056D	5100 -1	2 - K 3
	67056K	5103 -1	2 - L 3
	76724	5310A -1	2 - N 4
	76724	5310 -1	2 - M 4
	76724	5320 -1	2 - C 5
	76724	5320B -1	2 - D 5
RIVET, SEAL PLATE-SHROUD	56964A	5310 -1	2 - M 4
	56964A	5310A -1	2 - N 4
RIVET SPLASH SHIELD	51833	5000 -1	2 - E 3
ROD	88108	5700AC-3	2 - H10
	88108	5700AA-9	2 - K 9
	88108	5700A -4	2 - F 8
ROD 'A'	51934	5103 -1	2 - L 3
ROD 'B'	51936	5103 -1	2 - L 3
ROD, CLUTCH PEDAL	41051	4300 -1	1 - H15
ROD, CONNECTING	146511	1400BA-1	1 - F 6
	146511	1400B -1	1 - C 6
ROD, DIAPHRAGM	19825	1920 -2	1 - M 8
ROD, MOTOR	51933	5103 -1	2 - L 3
ROD, PARKING	19450	1950 -1	1 - I 9
ROD, PUSH	41131	4300 -1	1 - H15
	41341	4140B -1	1 - E15
	46021	4600 -1	1 - I16
ROD, SELECTOR	46571	4600 -1	1 - I16
ROD, SHIFT (1ST & 2ND)	17410	1720A -1	1 - K 7
	17410	1720 -1	1 - J 7
ROD SHIFT (3RD & 4TH)	17420	1720 1	1 - J 7
	17420	1720A 1	1 - K 7
ROD, SHIFT-OVERTOP & REVERSE	17431	1720 -1	1 - J 7
	17431	1720A -1	1 - K 7
ROD, TRUNK OPENING	56834	5260 1	2 L 4
ROTOR	14140	1400BA-1	1 - E 6
	23102A	1110B -1	1 - K 3
	23102A	1110BA-1	1 - L 3
	24540	1830B -1	1 - F 8
	24549	1830BA-1	1 - G 8
ROTOR SET OIL PUMP	238821	1400B -2	1 - D 6
ROTOR SENSOR FRONT A B S	33471	3300B -2	1 I13
ROTOR, SENSOR REAR A B.S	26471	2600 1	1 E11

PART NAME	D-CODE	SECTION	LOCATION
RUBBER (C), CUSHION-HOOD	56786	5230 -1	2 - K 4
RUBBER (C), SEAL-HOOD-FRONT	56770	5230 -1	2 - K 4
RUBBER (L), SEAL-SIDE PANEL	64913Z	5560 -3	2 - H 7
RUBBER (R), SEAL-SIDE PANEL	64913	5560 -3	2 - H 7
RUBBER, BLADE-FRONT	76631	6730 -1	3 - I 4
RUBBER, BLADE-REAR	76631A	6750 -1	3 - K 4
RUBBER, CUSHION	53771B	5260 -1	2 - L 4
	68815B	686CAB-1	3 - E 6
RUBBER, CUSHION-GARNISH	60736	5560 -2	2 - G 7
RUBBER, CUSHION-HOOD-FRONT	56787B	5230 -1	2 - K 4
RUBBER, CUSHION-HOOD-REAR	56788	5230 -1	2 - K 4
RUBBER, DUST SEAL	53134B	6130 -1	2 - F14
RUBBER, ENGINE MOUNTING	39040A	3900B -1	1 - J14
	39040A	3900BA-1	1 - K14
RUBBER, HANGER	40061B	4000BA-1	1 - C15
	40061B	4000B -1	1 - L14
RUBBER, INSULATION	13363	1320BA-1	1 - I 4
	13363	1320B -1	1 - G 4
	13363I	1310BA-2	1 - E 4
	13363I	1380B -3	1 - I 5
	13363I	1380BA-3	1 - M 5
RUBBER, MOUNTING	13363N	1330B -1	1 - K 4
	13363N	1330BA-1	1 - L 4
	15202	1500B -2	1 - H 6
	15202	1500BA-2	1 - J 6
	32123	3220A -1	1 - L12
	32123	3220 -1	1 - K12
	32124	3220 -1	1 - K12
	32124	3220A -1	1 - L12
	34390	3400 -1	1 - M13
	34390	3400B -1	1 - C14
	34390	3400A -1	1 - N13
	45181A	4500BA-1	1 - H16
RUBBER MOUNTING-DIFFERENTIAL	28895	2830 -1	1 - F12
RUBBER, MOUNTING-DIFFERENTIAL CASING	28890E	2710C -2	1 - M11
	28890E	2710A -2	1 - K11
	28890E	2710 -2	1 - I11
RUBBER, MOUNTING-HYDRAULIC UNIT	437A6	4370 -2	1 - E16
RUBBER, MOUNTING-IGNITION COIL	133633	1800BA-2	1 - D 8
	133633	1800B -2	1 - M 7
RUBBER, SEAL	15224A	1500BA-2	1 - J 6
	15224A	1500B -2	1 - H 6
	16145	1600 -1	1 - L 6
	17543	1700 -1	1 - N 6
	17543	1700A -1	1 - C 7
RUBBER, SEAL-COWL PANEL	56790A	5230 -1	2 - K 4
RUBBER SEAL-INTERCOOLER	13555C	1310BA-2	1 - E 4
RUBBER, SEAL-REAR LOWER ARM	26250	2830 -1	1 - F12
RUBBER, SEALING	13188	1300B -1	1 - M 3
RUBBER, SEAT-BEARING HOUSING	26410B	2600 -1	1 - E11
RUBBER, STABILIZER-FRONT	34156A	3410 -1	1 - D14
RUBBER, STOP	41682	4160 -1	1 - F15
	56135	5320B -1	2 - D 5
	56135	5320 -1	2 - C 5
RUBBER, STOPPER	40065A	4000B -1	1 - L14
	40065A	4000BA-1	1 - C15
	43029	4160 -1	1 - F15
	43029	4300 -1	1 - H15
RUBBER, STOPPER-REAR DAMPER	28014B	2800B -1	1 - D12
	28014B	2800 -1	1 - N11
	28014B	2800A -1	1 - C12
RUBBER, SUB-FRAME	28840	2830 -1	1 - F12
RUBBER, TRANSMISSION MOUNTING	39340	3900B -1	1 - J14
	39340	3900BA-1	1 - K14

PART NAME	D-CODE	SECTION	LOCATION
* * * S * * *			
SCOOP, HOOD	50650	5230 -1	2 - K 4
SCREW		6152A -1	2 - J14
		6152A -1	2 - J14
	13362B	1330BA-1	1 - L 4
	13362B	1330B -1	1 - K 4
	19782	1925 -1	1 - C 9
	19816	1925 -1	1 - C 9
	19817	1925 -1	1 - C 9
	44187	4400 -1	1 - F16
	50950C	5180 -2	2 - J 4
	76761	6120 -1	2 - E14
	87007	5100 -1	2 - K 3
	V0639	7900 -1	3 - L 7
SCREW & WASHER, TURN KNOB	66132	6612 -1	2 - C16
SCREW 'A', FIXING BAND	42780A	4200 1	1 - G15
SCREW 'A', LOWER UNIT-SUNROOF	699W6	6330 -2	2 - D15
SCREW 'B', FIXING BAND	42790	4200 -1	1 - G15
SCREW 'B', LOWER UNIT-SUNROOF	699W7	6330 -2	2 - D15
SCREW SET	24526	1830BA-1	1 - G 8
	24526	1830B -1	1 - F 8
	24535	1830BA-1	1 - G 8
	24535	1830B -1	1 - F 8
	24725	1840B -1	1 - H 8
	24725	1840BA-1	1 - I 8
SCREW, ADJUST	27301A	2710A -1	1 J11
	27301A	2710 -1	1 - H11
	27301A	2710C -1	1 - L11
	51038A	5100 -1	2 - K 3
	87016	5100 -1	2 - K 3
SCREW, ANTENNA	66933	6682 -2	3 - D 3
SCREW, BLEEDER	33691	2610 -1	1 - F11
	33691	3300 -3	1 - G13
	33691	3300B -2	1 - L13
	33691	3300A -2	1 - J13
	33691	4140B -1	1 - E15
SCREW, CHANGE LEVER KNOB	46058	4600 -1	1 - I16
SCREW, CLUSTER SWITCH	66168B	6612 -1	2 - C16
SCREW, COWL GRILLE	50950G	5180 -2	2 - J 4
SCREW, DOOR MIRROR	69101A	6900A -1	3 - C 7
SCREW, DOOR SWITCH	66546	6620 -1	2 - E16
SCREW, EARTH PLATE-ANTENNA	66A91	6682 -3	3 - E 3
SCREW, GLOVE LID	64998	5560 -3	2 - H 7
	64999	5560 -3	2 - H 7
SCREW, HEAD LAMP BEZEL	51611A	5103 -1	2 - L 3
SCREW, IDLER ADJUST-THROTTLE BODY	13W76	1364B -1	1 - C 5
SCREW, INTERIOR MIRROR	69245	6900A -4	3 - F 7
SCREW, KNUCKLE	57109	5700AA-6	2 - H 9
	57109	5700AB-2	2 - D10
	57109	5700A -3	2 - E 8
	57109	5700AC-3	2 - H10
	88109K	5700AB-2	2 - D10
	88109K	5700A -4	2 - F 8
	88109K	5700AC 3	2 - H10
	88109K	5700AA-10	2 - L 9
	88117	5700A -5	2 - G 8
	88117	5700AB-2	2 - D10
	88117	5700AA-10	2 - L 9
	88117	5700AC-3	2 - H10
SCREW, MIRROR	69123	6900A -3	3 - E 7
SCREW PROTECTOR-SASH	58879	5800AA-1	2 - K11
SCREW, RESET KNIOB	55713A	5500A -1	2 - I 6
SCREW, RESET KNOB	55713A	5500B -1	2 - J 6
	55713A	5500 1	2 - G 6
SCREW, SEAL RUBBER-INTERCOOLER	13556	1310BA-2	1 E 4

ALPHABETICAL INDEX

PART NAME	D-CODE	SECTION	LOCATION
SCREW, STOPPER	51411	5103 -1	2 - L 3
SCREW, TAPPING	51075D	5105 -1	2 - M 3
	67568	6630 -1	2 - F16
	68153A	6820A -1	3 - D 5
	68153C	5840A -1	2 - C13
	68153C	5840AB-1	2 - K13
	68153D	5840A -1	2 - C13
	68213	6800A -1	3 - M 4
	68843	5840A -7	2 - I13
	68843	5840AB-3	2 - M13
SCREW, TAPPING-LOWER UNIT	699W5	6330 -2	2 - D15
SCREW, WINDOW REGULATOR	58505C	5830A -4	2 - F12
SEAL (L), RADIATOR	152702	1500BA-2	1 - J 6
	152702	1500B -2	1 - H 6
SEAL (R), RADIATOR	152802	1500BA-2	1 - J 6
	152802	1500B -2	1 - H 6
SEAL KIT	49240A	2610 -1	1 - F11
	49470	4140B -1	1 - E15
	49530	4140B -1	1 - E15
SEAL KIT & FELT RING		6142A -1	2 - I14
SEAL KIT, CALIPER-FRONT	49240C	3300A -2	1 - J13
	49240C	3300 -3	1 - G13
	49240C	3300B -2	1 - L13
SEAL KIT, STEERING GEAR	32180A	3220A -1	1 - L12
SEAL KIT, VANE PUMP	32610	3240 -2	1 - D13
SEAL SET, OIL	231801	1110BA-1	1 - L 3
	231801	1110B -1	1 - K 3
SEAL, O-RING	19604	1940 -1	1 - H 9
SEAL, AIR-ADDITIONAL FAN	15228	1500BA-2	1 - J 6
	15228	1500B -2	1 - H 6
SEAL, APEX	113011	1110B -1	1 - K 3
	113011	1110BA-1	1 - L 3
SEAL, CORNER	113211	1110B -1	1 - K 3
	113211	1110BA-1	1 - L 3
SEAL, CUT RING	19258	1910 -1	1 - K 8
	19258	1920 -1	1 - L 8
SEAL, DUST-BALL JOINT	32279	3230 -1	1 - M12
SEAL, DUST-CLUSTER SWITCH	55422B	5520 -1	2 - K 6
SEAL, LATHE CUT	19476	1930 -1	1 - E 9
SEAL, O-RING	19475	1930 -1	1 - E 9
	19822	1920 -2	1 - M 8
	21274	1920 -2	1 - M 8
	21275	1920 -2	1 - M 8
SEAL, OIL	10507	1040BA-1	1 - H 3
	10507	1040B -1	1 - G 3
	105561	1030B -1	1 - E 3
	105561	1030BA-1	1 - F 3
	114041	1100BA-1	1 - J 3
	114041	1100B -1	1 - I 3
	16103A	1600A -1	1 - M 6
	16103A	1600 -1	1 - L 6
	17335	1700A -1	1 - C 7
	17335	1920 -1	1 - L 8
	17335A	1700 -1	1 - N 6
	17442K	1700 -1	1 - N 6
	17442K	1700A -1	1 - C 7
	17442K	1920 -1	1 - L 8
	19223A	1910 -1	1 - K 8
	27018	2710A -1	1 - J11
	27018	2710C -1	1 - L11
	27018	2710 -1	1 - H11
	27238	2710 -1	1 - H11
	27238	2710C -1	1 - L11
	27238	2710A -1	1 - J11
SEAL, OIL-FRONT AXLE	33065	3300B -2	1 - L13
	33065	3300 -3	1 - G13
	33065	3300A -2	1 - J13
SEAL, OIL-REAR AXLE	26154	2600 -1	1 - E11
SEAL, PISTON	19384A	1920 -1	1 - L 8
	19385	1920 -1	1 - L 8
	19603	1940 -1	1 - H 9
SEAL, RUBBER	13232	1310BA-2	1 - E 4
SEAL, RUBBER-BATTERY BOX	18592	1850B -1	1 - J 8
SEAL, SHAFT	32126	3220A -1	1 - L12
	32128A	3220 -1	1 - K12
SEAL, SIDE	23151A	1110B -1	1 - K 3
	23151A	1110BA-1	1 - L 3
SEAL, SIDE FRAME & BATTERY BRACKET	5699X	5390 -2	2 - D 6
	5699X	5390A -2	2 - F 6
SEAL, WATER PUMP	15120	1500B -1	1 - G 6
SEAL, WATER-PUMP	15120	1500BA-1	1 - I 6
SEAT (L), FRONT	57150	5700AA-6	2 - H 9
	57150	5700AB-2	2 - D10
	57150	5700AC-3	2 - H10
	57150	5700A -3	2 - E 8
SEAT (R), FRONT	57100	5700AA-6	2 - H 9
	57100	5700A -3	2 - E 8
	57100	5700AB-2	2 - D10
	57100	5700AC-3	2 - H10
SEAT, PINION-DIFFERENTIAL	27266	2710C -1	1 - L11
SEAT, REGULATOR SPRING	19773	1925 -1	1 - C 9
SENSOR (L), FRONT-A.B.S.	43701Z	4370 -2	1 - E16
SENSOR (L), REAR-A B.S.	43711Z	4370 -2	1 - E16
SENSOR (R), FRONT-A.B.S.	43701	4370 -2	1 - E16
SENSOR (R), REAR A.B.S.	43711	4370 -2	1 - E16
SENSOR, AIR TEMPERATURE	18845	6600BA-2	2 - K15
	18845	6600B -2	2 - H15
SENSOR, BOOST	18211C	6600B -2	2 - H15
	18211C	6600BA-2	2 - K15
	18211D	6600B -2	2 - H15
	18211D	6600BA-2	2 - K15
SENSOR, CRANK ANGLE	18230	6600B -2	2 - H15
	18230	6600BA-2	2 - K15
SENSOR, KNOCK	18920A	6600BA-2	2 - K15
SENSOR, OIL LEVEL	107301	6600B -2	2 - H15
	107301	6600BA-2	2 - K15
SENSOR, OXYGEN	18861B	6600B -2	2 - H15
	18861B	6600BA-2	2 - K15
SENSOR, THROTTLE	189101	1364B -1	1 - C 5
	189101	1364BA-1	1 - D 5
SENSOR, TURN CANCEL	66120	6611 -1	2 - N15
SENSOR, WATER LEVEL	15610	6600B -2	2 - H15
	15610	6600BA-2	2 - K15
SENSOR, WATER TEMPERATURE	18840C	6600B -2	2 - H15
	18840C	6600BA-2	2 - K15
SEPARATOR, WARNING UNIT	55433A	5500 -1	2 - G 6
	55433A	5500A -1	2 - I 6
	55433A	5500B -1	2 - J 6
SHADE, LAMP-LICENSE	51276	5120 -1	2 - E 4
SHADOW, LIGHT GUIDE	55488B	5540B -1	2 - E 7
	55488B	5540 -1	2 - M 6
	55488B	5540A -1	2 - C 7
SHAFT	19670	1940 -1	1 - H 9
	24740A	1840BA-1	1 - I 8
	24740A	1840B -1	1 - H 9
SHAFT, DIFFERENTIAL PINION	27261	2710A -1	1 - J11
	27261	2710 -1	1 - H11
	27261	2710C -1	1 - L11
SHAFT, DRIVE NO 1	76659	6730 -1	3 - I 4
SHAFT, DRIVE NO 2	76658	6730 -1	3 - I 4
SHAFT, DRIVEN GEAR	146201	1400B -1	1 - C 6
	146201	1400BA-1	1 - E 6
SHAFT, ECCENTRIC	114001	1100BA-1	1 - J 3
	114001	1100B -1	1 - I 3
SHAFT, ENERGY ABSORBER	32100	3210 -1	1 - I12
	32100	3210A -1	1 - J12
SHAFT, IDLER PULLEY		6142A -1	2 - I14
SHAFT, INPUT	19678	1910 -1	1 - K 8
SHAFT, INTERMEDIATE	21679	1930 -3	1 - G 9
	32090B	3210 -1	1 - I12
	32090B	3210A -1	1 - J12
SHAFT, MAIN	17221	1710 -1	1 - D 7
	17221	1710A -1	1 - G 7
SHAFT, MANUAL	19431	1950 -1	1 - I 9
SHAFT, OIL PUMP	141121	1400BA-1	1 - E 6
	141121	1400B -1	1 - C 6
SHAFT, OUTPUT	27270A	2710C -1	1 - L11
SHAFT, PARKING PAWL	19731	1950 -1	1 - I 9
SHAFT, PINION	18X20	1840BA-1	1 - I 8
	18X20	1840B -1	1 - H 8
SHAFT, PULLEY	15932	1580B -1	1 - K 6
SHAFT, REVERSE IDLE GEAR	17315	1710 -2	1 - E 7
	17315	1710A -2	1 - H 7
SHAFT, VPV CONTROL	13180A	1300B -1	1 - M 3
	13180B	1300B -1	1 - M 3
SHEET	42413	4200 -1	1 - G15
SHEET, BOOT	68832	5570 -2	2 - J 7
SHEET, RUBBER	34012	3400A -1	1 - N13
	34012	3400B -1	1 - C14
	34012	3400 -1	1 - M13
SHEET, SPRING	34341	3400B -1	1 - C14
	34341	3400A -1	1 - N13
	34341	3400 -1	1 - M13
	41040	4300 -1	1 - H15
	41043	4300 -1	1 - H15
SHEET, SPRING-REAR DAMPER	28040	2800B -1	1 - D12
	28040	2800A -1	1 - C12
	28040	2800 -1	1 - N11
SHEET, WARNING-UNIT	55448	5500B -1	2 - J 6
	55448	5500 -1	2 - G 6
	55448	5500A -1	2 - I 6
SHELL, CONNECTING	19565	1930 -2	1 - F 9
SHIELD (L), SPLASH-SIDE FRAME	56191B	5390 -2	2 - D 6
	56191B	5390A -2	2 - F 6
SHIELD (R), SPLASH-SIDE FRAME	56191X	5390 -2	2 - D 6
	56191X	5390A -2	2 - F 6
SHIM, ADJUST	146521	1400B -1	1 - C 6
	146521	1400BA-1	1 - E 6
	1710AK	1710A 1	1 - G 7
	17287	1710A -1	1 - G 7
	17287J	1710 -1	1 - D 7
SHIM, ADJUST-COUNTER SHAFT GEAR	17327	1710 -2	1 - F 7
	17327	1710A -2	1 - [illegible]
SHIM, HINGE-DOOR	58201	5800A 1	2 - J11
	58201	5800AA-1	2 - K11
SHIM, LOWER PANEL FRONT	69896C	6330 -1	2 - C15
SHIM, LOWER PANEL-REAR	69925	6330 -2	2 - D15
SHUTTING (L), SLIDING ROOF	69866A	6330 -1	2 - C15
SHUTTING (R) SUNROOF	69865A	6330 -1	2 - C15
SILENCER (L) MAIN	40200C	4000B -1	1 - L14
	40200C	4000BA-1	1 - C15
SILENCER (P), MAIN	40100A	4000B -1	1 - L14
	40100A	4000BA-1	1 - C15
SILENCER, FLOOR	76071	6860AB-2	3 - F 6
SILENCER RELIEF	13590B	1380B -3	1 - I 5
	13590B	1380BA-3	1 - [illegible] 5
SKIRT (L) FRONT AIR DAM	519L0	7800 -1	3 - K 7
SKIRT (R) FRONT AIR DAM	519K0	7800 -1	3 - K 7

ALPHABETICAL INDEX

PART NAME	D-CODE	SECTION	LOCATION
SKIRT, FRONT AIR DAM	50732C	7800 -1	3 - K 7
SLEEVE, BEARING-FRONT	247432	1840BA-1	1 - I 8
	247432	1840B -1	1 - H 8
SLEEVE, BEARING-REAR	247222	1840BA-1	1 - I 8
	247222	1840B -1	1 - H 8
SLEEVE, CLUTCH HUB	17242	1710A -1	1 - G 7
	17242A	1710A -1	1 - G 7
	17242A	1710 -1	1 - D 7
	17262	1710A -1	1 - G 7
	17262	1710 -1	1 - D 7
	17322	1710A -2	1 - H 7
	17732	1710 -3	1 - F 7
SLEEVE, GEAR	17279	1710 -1	1 - D 7
SLEEVE, GUIDE-CONTROL HUB	43709	4370 -2	1 - E16
SLEEVE, LOWER ARM	26221	2600 -1	1 - E11
SLEEVE, REGULATOR PLUG	19775	1925 -1	1 - C 9
SLEEVE, SPEEDOMETER	17442	1700A -1	1 - C 7
	17442	1700 -1	1 - N 6
	17442	1920 -1	1 - L 8
SOCKET	55261	5540B -1	2 - E 7
	55261	5540 -1	2 - M 6
	55261	5540A -1	2 - C 7
SOCKET, AIR BLEED	132601	1320B -1	1 - G 4
	132601	1320BA-1	1 - I 4
SOCKET, LICENSE LAMP	51276G	5120 -1	2 - E 4
SOCKET, REAR SIDE TURN LAMP	51554	5120 -1	2 - E 4
SOCKET, STOP LAMP-HIGH MOUNTED	51584	5110A -1	2 - C 4
	51584	5110A -2	2 - D 4
SOLENOID, DOWN SHIFT	19821	6600B -3	2 - I15
SOLENOID, LOCK-UP CONTROL	21296	6600B -3	2 - I15
SOLENOID, OVER DRIVE	21293	6600B -3	2 - I15
SPACER		6142A -1	2 - I14
	115021	1100BA-1	1 - J 3
	115021	1100B -1	1 - I 3
	133382	1330B -1	1 - K 4
	133382	1330BA-1	1 - L 4
	15103	1371B -1	1 - E 5
	15103	1500B -1	1 - G 6
	15933B	1580B -1	1 - K 6
	17304	1710 -2	1 - E 7
	17304	1710A -2	1 - H 7
	17304B	1710A -2	1 - H 7
	17304B	1710 -2	1 - E 7
	27401	2710 -1	1 - H11
	27401	2710A -1	1 - J11
	27401	2710C -1	1 - L11
	32140B	3220 -1	1 - K12
	40073	4000B -1	1 - L14
	40073	4000BA-1	1 - C15
	41084	4300 -1	1 - H15
	43063	4300 -1	1 - H15
	43608	1700A -1	1 - C 7
	45182A	4500BA 1	1 - H16
	63909	6300A -1	2 - N14
SPACER 'A'	70447A	6300A 1	2 - N14
SPACER 'C'	70449A	6300A -1	2 - N14
SPACER, AIR CLEANER	13331	1910 -1	1 - K 8
SPACER, DOWEL	19734	1950 -1	1 - I 9
SPACER HOOD STAY	52512	5230 -1	2 - K 4
SPACER PISTON STEM	193A0	1920 -1	1 - L 8
SPACER, REAR DAMPER	28025	2800B -1	1 - D12
	28025	2800 1	1 - N11
	28025	2800A -1	1 C12
SPACER SELECT LEVER	46084	4600 -1	1 - I16
	46093A	4600 1	1 - I16
SPACER, WINDOW	50891A	6300A -1	2 - N14
SPEAKER (L), LOUD DOOR	66960J	6682 -2	3 - D 3
SPEAKER (L), LOUD-FRONT	66960G	6682 -2	3 - D 3
SPEAKER (L), W/ BOX & AMP.	66960L	5700AC-3	2 - H10
SPEAKER (L), W/ BOX & AMPLIFIER	66960L	6682 -2	3 - D 3
SPEAKER (R), LOUD-DOOR	66960H	6682 -2	3 - D 3
SPEAKER (R), LOUD-FRONT	66960F	6682 -2	3 - D 3
SPEAKER (R), LOUD-RR.	66960K	6682 -2	3 - D 3
SPEAKER, BOX & AMPLIFIER	66960B	6682 -2	3 - D 3
SPEAKER, LOUD-FRONT	66960	6682 -2	3 - D 3
SPEAKER, LOUD-REAR	66970	6682 -2	3 D 3
SPEEDOMETER	55471	5540 -1	2 6
	55471	5540B -1	2 - 7
	55471	5540A -1	2 - C 7
SPINDLE	46152	4600 -1	1 - I16
SPINDLE, ADJUSTER	26731	2610 -1	1 - F11
SPINDLE, SELECT LOCK	17476	1720 -1	1 - J 7
	17476	1720A -1	1 - K 7
SPOILER (L), SIDE	519C0	7800 -1	3 - K 7
SPOILER (R), SIDE	519B0	7800 -1	3 - K 7
SPOILER, REAR	51950	7800 -1	3 - K 7
SPRING	114121	1100BA-1	1 - J 3
	114121	1100B -1	1 - I 3
	13087	6640 -1	2 - H16
	14273	1040BA-1	1 - H 3
	14273	1040B -1	1 - G 3
	17477	1720A -1	1 - K 7
	17477	1720 -1	1 - J 7
	17483	1720A -1	1 - K 7
	17483	1720 -1	1 - J 7
	19247	1920 -1	1 - L 8
	19248	1910 -1	1 - K 8
	19664	1940 -1	1 - H 9
	19765	1925 -1	1 - C 9
	19808	1925 -1	1 - C 9
	19814	1925 -1	1 - C 9
	41470	4140B -1	1 - E15
	55412C	5570 -1	2 - I 7
	60252	6611 -1	2 - N15
SPRING (L), CALIPER-REAR	266687	2610 -1	1 F11
SPRING (L), COIL	34011X	3400 -1	1 - M13
	34011X	3400A -1	1 - N13
	34011X	3400B -1	1 - C14
SPRING (R), CALIPER-REAR	26668	2610 -1	1 - F11
SPRING (R) COIL	34011B	3400 -1	1 - M13
	34011B	3400B -1	1 - C14
	34011B	3400A -1	1 - N13
SPRING SET THROTTLE BODY	13W60	1364BA-1	1 - D 5
	13W60	1364B -1	1 - C 5
SPRING 1-2 SHIFT	19786	1925 -1	1 - C 9
SPRING, 2-3 SHIFT	19788	1925 -1	1 - C 9
SPRING, 3-2 TIMING	21815	1925 -2	1 - D 9
SPRING, 3-4 SHIFT	21682	1925 -1	1 - C 9
SPRING ACCUMULATOR	21272	1920 -2	1 - M 8
SPRING, ADJUST	66016	5100 -1	2 - K 3
SPRING, APEX SEAL	113041	1110BA-1	1 - L 3
	113041	1110B -1	1 - K 3
SPRING, BALANCE-SHAFT	32101A	3210 -1	1 - I12
	32101A	3210A -1	1 - J12
SPRING, BALL PARK	19703	1950 -1	1 - I 9
SPRING, BRUSH	24521	1830B -1	1 - F 8
	24521	1830BA-1	1 - G 8
	24752	1840B -1	1 - H 8
	24752	1840BA-1	1 - I 8
SPRING CENTER PANEL	55216B	5500B -1	2 - J 6
	55216B	5500A 1	2 I 6
	55216B	5500 1	2 G 6
	55216B	5560 -1	2 - F 7
SPRING, COIL-REAR	28010A	2800A -1	1 - C12
	28010A	2800 -1	1 - N11
	28010A	2800B -1	1 - D12
SPRING, CONICAL	27259B	2710A -1	1 - J11
SPRING, CORNER SEAL	113231	1110B -1	1 - K 3
	113231	1110BA-1	1 - L 3
SPRING, CUSHION-PISTON STEM	19368	1920 -1	1 - L 8
SPRING, DAMPER	13W61	1364BA-1	1 - D 5
	13W61	1364B -1	1 - C 5
SPRING DIAPHRAGM	17203A	1710A -1	1 - G 7
	17303C	1710 -2	1 - E 7
	17303C	1710A -2	1 - H 7
SPRING, DOWN SHIFT	19802	1925 -1	1 - C 9
SPRING, FRT.-INNER	113511	1110B -1	1 - K 3
	113511	1110BA-1	1 - L 3
SPRING, FRT -OUTER	113531	1110BA-1	1 - L 3
	113531	1110B -1	1 - K 3
SPRING, GLOVE LID	64086	5560 -2	2 - G 7
SPRING, GOVERNOR	19666	1940 -1	1 - H 9
SPRING, INTERIOR MIRROR	69248	6900A -4	3 - F 7
SPRING, LIFT	42438	4200 -1	1 G15
SPRING, O/W VALVE	41424	4140B -1	1 - E15
SPRING, OUTER-APEX SEAL	11C06	1110BA-1	1 - L 3
	11C06	1110B -1	1 - K 3
SPRING, PARKING LEVER	44031	4400 -1	1 - F16
SPRING, PAWL RETURN	19733	1950 -1	1 - I 9
SPRING, PELLET	148211	1500BA-1	1 - I 6
	148211	1500B -1	1 - G 6
SPRING, PISTON	19606	1940 -1	1 - H 9
SPRING, PISTON RETURN	19363A	1920 -1	1 - L 8
	19486	1930 -1	1 - E 9
SPRING, PRESSURE	14116	1400B -1	1 C 6
	14116	1400BA 1	1 E 6
SPRING, REAR-INNER	113611	1110BA-1	1 - L 3
	113611	1110B -1	1 - K 3
SPRING REAR-OUTER	113631	1110BA-1	1 - L 3
	113631	1110B -1	1 - K 3
SPRING REGULATOR	19772	1925 -1	1 - C 9
SPRING REMOTE CONT -AUDIO	66BL2	6680 -4	2 - L16
SPRING, RETURN	41081A	4300 -1	1 - H15
	41081A	4400 -1	1 - F16
	41619	4160 1	1 - F15
	88107	5700AA-9	2 - K 9
	88107	5700A -4	2 - F 8
SPRING RETURN-BRAKE	43081A	4300 1	1 - H15
SPRING, RETURN-SHAFT	32102	3210A -1	1 - J12
	32102	3210 -1	1 - I12
SPRING, SECONDARY LOCK	19778	1925 1	1 - C 9
SPRING, SELECT	17465C	1720 1	1 - J 7
	17465C	1720A 1	1 - K 7
SPRING, SHIFT ROD	17411	1720 1	1 J 7
	17411	1720A -1	1 K 7
SPRING, SHIFT /ERSE	17411A	1720 -1	1 - J 7
SPRING, SI	113171	1110B -1	1 - K 3
	113171	1110BA-1	1 - L 3
SPRING, SYNCHRONIZER	17264A	1710 -1	1 - D 7
	17264A	1710A -1	1 - G 7
	17624	1710A -2	1 - H 7
SPRING SYNCHRONIZER KEY	17264	1710A -1	1 G 7
	17264	1710 1	1 D 7
	17724A	1710 -3	1 F 7
	17724A	1710A 3	1 I 7
SPRING THERMO PELLET	11D17	1100B 1	1 J 3
	11D17	1100BA 1	1 J 3
SPRING THROTTLE BACK-UP	19798	1925 1	1 C 9

ALPHABETICAL INDEX

PART NAME	D-CODE	SECTION	LOCATION
SPRING, YOKE	32113	3220 -1	1 - K12
	32113	3220A -1	1 - L12
SPROCKET, REGULATOR GUIDE	58581	5830A -4	2 - F12
STABILIZER, FRONT	34151	3410 -1	1 - D14
STABILIZER, REAR	28101	2810 -1	1 - E12
STARTER	18400	1840B -1	1 - H 8
	18400	1840BA-1	1 - I 8
STATOR	24501	1830BA-1	1 - G 8
	24501	1830B -1	1 - F 8
STAY (L), DAMPER	63610A	6230 -2	2 - M14
STAY (L), DAMPER-TRUNK LID	56860Z	5260 -1	2 - L 4
STAY (L), FENDER-LOWER	54190	5310A -1	2 - N 4
	54190	5310 -1	2 - M 4
STAY (L), FENDER-UPPER	54192	5310 -1	2 - M 4
	54192	5310A -1	2 - N 4
STAY (L), FRONT BUMPER	50080Z	5000 -1	2 - E 3
STAY (L), REAR BUMPER	50270Z	5010A -1	2 - G 3
STAY (R), DAMPER	62610A	6230 -1	2 - L14
STAY (R), DAMPER-TRUNK LID	56860D	5260 -1	2 - L 4
STAY (R), FENDER-LOWER	53190	5310A -1	2 - N 4
	53190	5310 -1	2 - M 4
STAY (R), FENDER-UPPER	53192	5310 -1	2 - M 4
	53192	5310A -1	2 - N 4
STAY (R), FRONT BUMPER	50080	5000 -1	2 - E 3
STAY (R), REAR BUMPER	50270	5010A -1	2 - G 3
STAY, DAMPER	62610	6230 -1	2 - L14
STAY, HOOD	52510	5230 -1	2 - K 4
STAY, INTERIOR	69170A	6900A -3	3 - E 7
STAY, LOCK-HOOD	56651	5230 1	2 - K 4
STAY, SET PLATE-FASCIA	53172	5310 -1	2 - M 4
	53172	5310A -1	2 - N 4
STEM, PISTON	19386	1920 -1	1 - L 8
STEM, PISTON BAND	21386	1920 -2	1 - M 8
STIFFENER (L), REAR SPOILER	519LX	7800 -1	3 - K 7
STIFFENER (R), REAR SPOILER	519MX	7800 -1	3 - K 7
STOPPER	88109C	5700A -4	2 - F 8
	88109C	5700AA-10	2 - L 9
STOPPER (L), GLOVE LID	64036Z	5560 -2	2 - G 7
STOPPER (L), STORAGE BOX	69777Y	6845 -1	3 - K 5
STOPPER (R), GLOVE LID	64036	5560 -2	2 - G 7
STOPPER (R), STORAGE BOX	69777A	6845 -1	3 - K 5
STOPPER SET	24712	1840B -1	1 - H 8
	24712	1840BA-1	1 - I 8
STOPPER, BUMP	3410X	3400A -1	1 - N 3
	3410X	3400 -1	1 - M13
STOPPER, CALIPER-REAR	26690	2610 -1	1 - F11
STOPPER, CONSOLE LID	64481A	5570 2	2 - J 7
	64482B	5570 -2	2 - J 7
STOPPER, FILLER LID	42403	4200 -1	1 - G15
STOPPER, GLASS	58910	5830AA-2	2 - H12
	58910A	5800AA-1	2 - K11
STOPPER, LOWER ARM	26335	2600 -1	1 - E11
STOPPER, REAR DAMPER	28030	2800B -1	1 - D12
	28030	2800 -1	1 - N11
	28030	2800A -1	1 - C12
STOPPER WHEEL	68230	6870 -1	3 - J 6
STRAINER, OIL	14240	1400BA-1	1 E 6
	14240	1400B -1	1 - C 6
	19815	1920 -2	1 - M 8
	19815	1925 -1	1 - C 9
STRAP 'A', CARGO ROOM	69570A	6900A -5	3 - G 7
STRAP 'A', L COMPARTMENT	69571B	6900A -5	3 - G 7
STRAP 'B', CARGO ROOM	69580	6900A -5	3 - G 7
STRAP 'B', L COMPARTMENT	69572	6900A -5	3 - G 7
STRAP, AIR PUMP	137141	1371B 1	1 E 5
	137141	1371BA-1	1 F 5
STRAP, ALTERNATOR	18361	1800BA-2	1 - D 8
	18361	1800B -2	1 - M 7
STRIKER	58570A	5830A -4	2 - F12
	58570A	5830AA-2	2 - I12
	64101	5560 -2	2 - G 7
STRIKER (L), LOCK-TOP	R1882	6330A -1	2 - E15
STRIKER (R), LOCK-TOP	R1881	6330A -1	2 - E15
STRIKER, LID	56880	5260 -1	2 - L 4
STRIKER, LOCK	62361	6230 -1	2 - L14
STRIKER, RR. SEAT CUSHION	57510D	5750A -2	2 - K10
	57510D	5750AA-3	2 - E11
STRIKER, STORAGE BOX	69776	6845 -1	3 - K 5
STRUT, BAND	19361	1920 -1	1 - L 8
STUD	102081	1040B -1	1 - G 3
	102081	1040BA-1	1 - H 3
	13173	1300B -1	1 - M 3
	13453B	1310B -1	1 - C 4
	13453B	4000BA-1	1 - C15
	13456	1310BA-2	1 - E 4
	136071	1310BA-2	1 - E 4
	40398	1310B -1	1 - C 4
STUD, CLUTCH HOUSING	16118	1600A -1	1 - M 6
STUD, COVER	10619A	1040BA-1	1 - H 3
	10619A	1040B -1	1 - G 3
STUD, DIFFERENTIAL CARRIER	27157	2710 -1	1 - H11
	27157	2710A -1	1 - J11
	27157	2710C -1	1 - L11
STUD, FRONT COVER	10506	1040BA-1	1 - H 3
	10506	1040B -1	1 - G 3
STUD, HEX-HYDRAULIC UNIT	437A7	4370 -2	1 - E16
STUD, HOUSING	10219A	1040b -1	1 - G 3
	10219A	1040BA-1	1 - H 3
STUD, ROTOR HOUSING	10105A	1030B -1	1 - E 3
	10105A	1030BA-1	1 - F 3
SUN VISOR (L)	69210Z	6900A -4	3 - F 7
SUN VISOR (R)	69210	6900A 3	3 - F 7
SUPPORT (L), MOUNTING	33280X	3300 -3	1 - G13
SUPPORT (R), MOUNTING	33280B	3300 -3	1 - G13
SUPPORT, DRUM	21250	1920 -2	1 - M 8
SUPPORT, FOOT	69910A	6860A -3	3 N 5
	69910A	6860AA-2	3 - D 6
	69910A	6860AB-2	3 - F 6
SUPPORT, MOUNTING	26280B	2610 -1	1 F11
SUPPORT, SEAL RUBBER	15227	1500B -2	1 - H 6
	15227	1500BA-2	1 J 6
SUPPORTER	18141	1800BA-2	1 - D 8
SUPPORTER, ACTUATOR	19701	1950 -1	1 - I 9
SUPPORTER, CORD	18141E	6704 2	3 - F 4
SUPPORTER, FORK	16232A	1600A -1	1 - M 6
	16232A	1600 1	1 - L 6
SUPPORTER, WIRE	18141E	1800BA 2	1 - D 8
	18141E	1800B 2	1 - M 7
SWITCH		6132A 2	2 H14
	17630	6600B 2	2 - H15
	24760	1840B 1	1 H 8
	24760	1840BA 1	1 I 8
SWITCH (L), LOCK-CYLINDER	58496Y	5830AA 2	2 H12
	58496A	5830A 4	2 - F12
SWITCH (R), LOCK-CYLINDER	58496A	5830A 4	2 F12
	58496A	5830AA-2	2 - H12
SWITCH, ADJUSTABLE DAMPER	66340C	6610 1	2 M15
SWITCH, BACK-UP LAMP	17640	6600BA 2	2 K15
SWITCH, BOOST	18711E	6600B 2	2 H15
SWITCH, CLUSTER	66160B	6612 1	2 C16
SWITCH, CLUTCH	18660B	4300 1	1 H15
SWITCH, CLUTCH CUT	66400	4300 1	1 H15
SWITCH, CRUISE-CLUSTER	66184A	6612 -1	2 - C16
SWITCH, DOOR	66820	4620 -1	2 - E16
SWITCH, GLOVE TRAY	60690	5560 -1	2 - F 7
	60690	6845 -1	3 - K 5
SWITCH, IGNITION	66155	0900A -1	2 - C 3
SWITCH, INHIBITOR	19444	6600B -3	2 - I15
SWITCH, KICK DOWN	18660	4160 -1	1 - F15
SWITCH, LEVEL-WASHER TANK	51818A	6720 -2	3 - H 4
SWITCH, LIGHT-BRAKE	67210	4300 -1	1 - H15
SWITCH, LIGHT-CLUSTER SWITCH	66170F	6612 -1	2 - C16
SWITCH, LOCK CYLINDER	62496	6230 -1	2 - L14
SWITCH, NEUTRAL	17640A	6600BA-2	2 - K15
	17640A	6600B -2	2 - H15
SWITCH, OIL PRESSURE	21291	6600B -3	2 - I15
SWITCH, OVERDRIVE CONTROL	46040	4600 -1	1 - I16
SWITCH, PARKING LAMP	66840	4400 -1	1 - F16
SWITCH, POWER WINDOW	66350	6615 -1	2 - D16
	66370	6615 -1	2 - D16
SWITCH, PRESSURE	32230	3240 -2	1 - D13
	43410	4340 -2	1 - K15
	43410	4340A -2	1 - M15
SWITCH, REMOTE CONTROL MIRROR	66600A	6610 -1	2 - M15
SWITCH, THERMO	18890	6600B 2	2 - H15
	18890	6600BA-2	2 - K15
SWITCH, TURN-CLUSTER	66130A	6612 -1	2 - C16
SWITCH, WATER THERMO	18630	6600B -2	2 - H15
	18630	6600BA-2	2 - K15
	18840D	6600B -2	2 - H15
	18840D	6600BA-2	2 - K15
SWITCH, WIPER-CLUSTER SWITCH	66180F	6612 -1	2 - C16
• • • T • • •			
T MISSION, COMPLETE	19090A	1910 -1	1 - K 8
TAB, EARTH	66872	6684 -1	3 - F 3
TACHOMETER	55461	5540B -1	2 - E 7
	55461	5540A -1	2 - C 7
	55461	5540 -1	2 - M 6
TACKER	68815A	5790A -1	2 - H11
TANK	76671	6720 2	3 - H 4
TANK SET, RESERVE	415515	4140B -1	1 F15
	435505	4340A -2	1 M15
	435505	4340 -2	1 K15
TANK, FUEL	42110	4200 1	1 G15
TANK, STARTING FLUID	135101	1350BA-1	1 N 4
	135101	1350B 1	1 - M 4
TANK, SUB-RADIATOR	15350	1500B 2	1 H 6
	15350	1500BA 2	1 J 6
TANK SURGE	13130E	1300BA-1	1 - N 3
	13130E	1300B -1	1 M 3
TANK, UPPER-RADIATOR	15234	1500BA-2	1 - J 6
	15234	1500B -2	1 H 6
TANK VANE PUMP	32690	3240 -2	1 D13
TANK WASHER-FRONT	67480	6720 -2	3 H 4
TANK WASHER REAR	67480A	6750 -1	3 K 4
TANK WASHER RR WIPER	76671A	6750 -1	3 K 4
TAPE FOAM		6152A 1	2 J14
		6152A -1	2 J14
TAPE INSULATION		6152A 1	2 J14
TAPE PRESSTITE		6152A -1	2 J14
TERMINAL	32820	3200 -1	1 H12
TERMINAL SET	24590	1830B 1	1 - F 8
	24590	1830BA 1	1 G 8
TERMINAL DIODE	67242B	6702 1	3 M 3
THERMO UNIT	135311	1350B 1	1 M 4
	135311	1350BA 1	1 N 4

ALPHABETICAL INDEX

PART NAME	D-CODE	SECTION	LOCATION
THERMOSTAT		6152A 1	2 - J14
THERMOSTAT SET	151715	1500BA-1	1 - I 6
	151715	1500F -1	1 - G 6
TIRE	37600A	3700A -1	1 - H14
	37600A	3700 -1	1 - E14
TOOL SET	68660A	6870 -1	3 - J 6
TOWER (L), LOCK-REAR END PANEL	71760	5340A -2	3 - G 5
TOWER (R), LOCK-REAR END PANEL	70760	5340A -1	2 - F 5
TRANSISTOR, POWER	61755	6120 -1	2 - E14
TRAY, ASH	64620	5500 -2	2 - H 6
	64620	5500A -1	2 - I 6
	64620	5500B -1	2 - J 6
TRAY, BATTERY	56863A	1850B -1	1 - J 8
TRAY, GLOVE LID	64161	5560 -2	2 - G 7
TRAY, PACKAGE	70500	5340AA-2	2 - I 5
TRIM (L), 'A' PILLAR	68160Z	6820AA-1	3 - E 5
TRIM (L), 'B' PILLAR	68210Z	6820A -1	3 - D 5
TRIM (L), DOOR	68420Z	5840AB-1	2 - K13
	68420Z	5840A -3	2 - E13
TRIM (L), FRONT PILLAR	68171Z	6820A -1	3 - D 5
TRIM (L), FRONT SIDE	68371Z	6840A -1	3 - F 5
	68371Z	6840AB-1	3 - J 5
TRIM (L), QUARTER	68520Y	7250 -1	3 - J 7
TRIM (L), SEAT BACK	88181	5700AA-12	2 - N 9
	88181	5700A -8	2 - J 8
	88181	5700AB-3	2 - E10
	88181	5700AC-4	2 - I10
TRIM (L), SEAT CUSHION	88161	5700AC-4	2 - I10
	88161	5700AB-3	2 - E10
	88161	5700AA-11	2 - M 9
	88161	5700A -7	2 - I 8
TRIM (L), TRUNK SIDE	68860Z	6840A -2	3 - G 5
	68860Z	6840AB-1	3 - J 5
TRIM (R), 'A' PILLAR	68160	6820AA-1	3 - E 5
TRIM (R), 'B' PILLAR	68210	6820A -1	3 - D 5
TRIM (R), DOOR	68420	5840A -1	2 - C13
	68420	5840AB-1	2 - K13
TRIM (R), FRONT PILLAR	68171	6820A -1	3 - D 5
TRIM (R), FRONT SIDE	68371	6840A -1	3 - F 5
	68371	6840AB-1	3 - J 5
TRIM (R), QUARTER	68520A	7250 -1	3 - J 7
TRIM (R), SEAT BACK	88131	5700A -6	2 - H 8
	88131	5700AA-10	2 - L 9
	88131	5700AB-2	2 - D10
	88131	5700AC-4	2 - I10
TRIM (R), SEAT CUSHION	88111	5700AC-3	2 - H10
	88111	5700AA-10	2 - L 9
	88111	5700AB-2	2 - D10
	88111	5700A -5	2 - G 8
TRIM (R), TRUNK SIDE	68860	6840A -1	3 - F 5
	68860	6840AB-1	3 - J 5
TRIM (R), TRUNK SIDE-UPPER	68860A	6840A -2	3 - G 5
	68860Y	6840A -2	3 - G 5
TRIM NO. 1 (R), CUSHION-FRT	57318M	5700AA-7	2 - I 9
TRIM NO. 1, BACK	57351L	5700AA-7	2 - I 9
TRIM NO. 1, BACK-REAR	57611	5750AA-4	2 - F11
TRIM NO. 1, CUSHION	57311L	5700AA-6	2 - H 9
TRIM NO. 1, CUSHION-REAR	57511	5750AA-3	2 - E11
TRIM NO. 1, HEAD REST	57391L	5700AA-8	2 - J 9
TRIM NO. 10, CUSHION-REAR	57520L	5750AA-4	2 - F11
TRIM NO. 11, CUSHION-REAR	57521	5750AA-4	2 - F11
TRIM NO. 12, CUSHION-REAR	57522	5750AA-4	2 - F11
TRIM NO. 13, CUSHION-REAR	57523	5750AA-4	2 - F11
TRIM NO. 14, CUSHION-REAR	57524	5750AA-4	2 - F11
TRIM NO. 15, CUSHION-REAR	57525	5750AA-4	2 - F11
TRIM NO. 16, CUSHION-REAR	57526	5750AA-4	2 - F11

PART NAME	D-CODE	SECTION	LOCATION
TRIM NO. 2 (R), CUSHION-FRT	57319M	5700AA-7	2 - I 9
TRIM NO. 2, BACK	57352L	5700AA-7	2 - I 9
TRIM NO. 2, BACK-REAR	57612	5750AA-4	2 - F11
TRIM NO. 2, CUSHION	57312L	5700AA-6	2 - H 9
TRIM NO. 2, CUSHION-REAR	57512	5750AA-3	2 - E11
TRIM NO. 2, HEAD REST	57392L	5700AA-9	2 - K 9
TRIM NO. 3 (R), BACK-FRT	57357M	5700AA-8	2 - J 9
TRIM NO. 3 (R), CUSHION-FRT	57320M	5700AA-7	2 - I 9
TRIM NO. 3, BACK	57353L	5700AA-7	2 - I 9
TRIM NO. 3, BACK-REAR	57613	5750AA-5	2 - G11
TRIM NO. 3, CUSHION	57313L	5700AA-6	2 - H 9
TRIM NO. 3, CUSHION-REAR	57513	5750AA-3	2 - E11
TRIM NO. 3, HEAD REST	57393L	5700AA-9	2 - K 9
TRIM NO. 4 (R), BACK-FRT	57358M	5700AA-8	2 - J 9
TRIM NO. 4 (R), CUSHION-FRT	57321M	5700AA-7	2 - I 9
TRIM NO. 4, BACK	57354L	5700AA-8	2 - J 9
TRIM NO. 4, BACK-REAR	57614	5750AA-5	2 - G11
TRIM NO. 4, CUSHION	57314L	5700AA-6	2 - H 9
TRIM NO. 4, CUSHION-REAR	57514	5750AA-3	2 - E11
TRIM NO. 5 (R), BACK-FRT	57359M	5700AA-8	2 - J 9
TRIM NO. 5 (R), CUSHION-FRT	57322M	5700AA-7	2 - I 9
TRIM NO. 5, BACK	57355L	5700AA-8	2 - J 9
TRIM NO. 5, CUSHION	57315L	5700AA-6	2 - H 9
TRIM NO. 5, CUSHION-REAR	57515	5750AA-3	2 - E11
TRIM NO. 6 (R), BACK-FRT	57360M	5700AA-8	2 - J 9
TRIM NO. 6 (R), CUSHION-FRT	57323M	5700AA-7	2 - I 9
TRIM NO. 6, BACK	57356L	5700AA-8	2 - J 9
TRIM NO. 6, CUSHION	57316L	5700AA-7	2 - I 9
TRIM NO. 6, CUSHION-REAR	57516	5750AA-3	2 - E11
TRIM NO. 7, BACK	57357L	5700AA-8	2 - J 9
TRIM NO. 7, CUSHION REAR	57517	5750AA-3	2 - E11
TRIM NO. 8 CUSHION-REAR	57518	5750AA-3	2 - E11
TRIM NO. 9 CUSHION-REAR	57519	5750AA-4	2 - F11
TRIM, FORMING BAR	4821X	6810 -1	3 - C 5
TRIM, FRONT HEADER	68061D	6800AB-1	3 - N 4
TRIM, REAR SEAT BACK	88251	5750A -2	2 - K10
	88251	5750AA-5	2 - G11
TRIM, REAR SEAT CUSHION	88201	5750A -2	2 - K10
	88201	5750AA-5	2 - G11
TRIM, SUNROOF	69860	6330 -1	2 - C15
TRIM, TOP	6803X	6800AB-1	3 - N 4
TRIM, TRUNK END	68890	6840AB-1	3 - J 5
TUBE	88270A	5750A -3	2 - I10
	88270A	5750AA-5	2 - G11
TUBE NO. 1, AIR	14606A	1400B 1	1 - C 6
	14606A	1400BA-1	1 - E 6
TUBE NO. 2, AIR	14607	1400BA-1	1 - E 6
	14607	1400B -1	1 - C 6
TUBE NO. 3, AIR	14609	1400B -1	1 - C 6
	14608	1400BA-1	1 - E 6
TUBE NO. 4, AIR	14609	1400BA-1	1 - E 6
	14609	1400B 1	1 - C 6
TUBE, AIR INLET	14616	1400B 1	1 - C 6
	14616	1400BA-1	1 - E 6
TUBE, CORRUGATE	67509	6750 1	3 - K 4
	67509D	6750 -1	3 - K 4
TUBE, EXTENSION		6152A -1	2 - J14
TUBE, GOVERNOR	21660	1900 1	1 - K 8
TUBE, METERING OIL	146301	1400BA 1	1 - E 6
	146301	1400B 1	1 - C 6
	146401	1400B 1	1 - C 6
	146401	1400BA 1	1 - E 6
	146501	1400B 1	1 - C 6
	146501	1400BA 1	1 - E 6
	146601	1400B 1	1 - C 6
	146601	1400BA 2	1 - E 6

PART NAME	D-CODE	SECTION	LOCATION
TUBE, OIL FILTER-UPPER	19890	1920 2	1 - M 8
TUBE, OIL LEVEL	19870	1920 2	1 - M 8
TUBE, REGULATOR GUIDE	68592C	5830A 4	2 - I12
TUBE, VACUUM	13350K	1380BA-3	1 - M 5
	20380	1380B 3	1 - I 5
TUNER	66900	6680 3	2 - K13
TY-RAP		6132A 1	2 - G14
		6152A -2	2 - J14
• • • U • • •			
U-NUT	88323A	5700AA-12	2 - N 9
UNIT (L), SIDE TURN-REAR	51565	5120 1	2 - E 4
UNIT (R), SIDE TURN-REAR	51555	5120 1	2 - E 4
UNIT, A.C.C. CONTROL	66320A	6640 1	2 - H16
UNIT, CONTROL	187012	6600B -2	2 - H15
UNIT, CPU	675608	6630 -1	2 - F16
UNIT, DOOR LOCK & TIMER	67830	6630 -1	2 - F16
UNIT, HEAD LAMP	51032A	5100 -1	2 - K 3
UNIT, HEAT GAUGE	18510	6600BA-2	2 - K15
	18510	6600B -2	2 - H15
UNIT, OPENER-GLASS HATCH	623508	6230 -1	2 - L14
UNIT, WARNING	557108	5500A -1	2 - I 6
	557108	5500 1	2 - G 6
	557108	5500B -1	2 - J 6
• • • V • • •			
V-BELT	137151	1371B -1	1 - E 5
	137151	1371BA-1	1 - F 5
	15907	1580B -1	1 - K 6
	18381	1800B 2	1 - M 7
	18381	1800BA-2	1 - D 8
V-NUT	88327	5700A -8	2 - J 8
V-SPRING, REAR BRAKE	2623	2610	1 - F11
VACUUM POWER ASSIST	43800	4340 2	1 - K13
	43800	4340A 2	1 - M15
VALVE	19663	1940 -1	1 - H 9
	19665	1940 -1	1 - H 9
	32380A	3220A -1	1 - L12
VALVE (L), SHUTTER	59865Z	5340AA-1	2 - H 5
VALVE (R), SHUTTER	59865	5340AA-1	2 - H 5
VALVE PLATE ASSEMBLY		6142A -1	2 - I14
VALVE, 1-2 SHIFT	19785	1925 1	1 - C 9
VALVE, 2-3 SHIFT	19787	1925 1	1 - C 9
VALVE, 3-2 TIMING	21813	1925 -2	1 - D 9
VALVE, 3-4 SHIFT	21681	1925 -1	1 - C 9
VALVE, 3-4 SHIFT-COAST	21684	1925 -2	1 - D 9
VALVE, 3-WAY	13240	1380B -3	1 - I 5
	13240	1380BA-3	1 - M 5
VALVE, AIR	37600C	3700A -1	1 - H14
	37600C	3700 1	1 - E14
VALVE, AIR BY-PASS	20250	1330BA 1	1 - L 4
VALVE, AIR CONTROL	137201	1371B 1	1 - E 5
	137201	1371BA 1	1 - F 5
VALVE, AIR SUPPLY	13760A	1380BA 3	1 - M 5
VALVE, BY-PASS AIR CONTROL	20660	1380BA-3	1 - N 5
	20660	1380B 4	1 - J 5
VALVE, CHECK	132651	1330BA-1	1 - L 4
	137301	1371B -1	1 - E 5
	137301	1371BA 1	1 - F 5
	13995	1364B 1	1 - C 5
	13995	1364BA 1	1 - D 5
	146801	1400B 2	1 - D 6
	146801	1400BA 2	1 - F 6
	42710	4200 1	1 - G15
	43770	4340 2	1 - K15

ALPHABETICAL INDEX

PART NAME	D-CODE	SECTION	LOCATION
VALVE, CHECK	43770	4340A -2	1 - M15
	67508	6750 -1	3 - K 4
VALVE, CONTROL	19750	1920 -2	1 - M 8
	19750	1925 -1	1 - C 9
VALVE, DELAY	139801	1380B -3	1 - I 5
	13980F	1364B -1	1 - C 5
	20309B	1364B -1	1 - C 5
VALVE, DOWN SHIFT	19801	1925 -1	1 - C 9
VALVE E.G.R.	20300	1380BA-3	1 - M 5
	20300	1380B -3	1 - I 5
VALVE, EXPANSION		6152A -1	2 - J14
VALVE, MANUAL	19768	1920 -2	1 - M 8
	19768	1925 -1	1 - C 9
VALVE, MODIFIER	19791	1925 -1	1 - C 9
VALVE, NON-RETURN	42280	4200 -1	1 - G15
VALVE, ORIFICE CHECK	19807	1925 -1	1 - C 9
VALVE, P B	43900	4360 -1	1 - N15
	43900A	4360A -1	1 - C16
VALVE, PURGE	20950A	1380B -4	1 - J 5
	20950A	1380BA-4	1 - N 5
VALVE, REGULATOR	19771	1925 -1	1 - C 9
VALVE, SCHRAEDER		6132A -2	2 - H14
VALVE, SECONDARY LOCK	19777	1925 -1	1 - C 9
VALVE, SOLENOID	237251	1371B -1	1 - E 5
	237251	1371BA-1	1 - F 5
VALVE, SOLENOID-AIR BLEED	13720D	1380B 3	1 - I 5
	13720D	1380BA-3	1 - M 5
VALVE, STARTING FLUID	13540A	1350BA-1	1 - N 4
	13540A	1350B -1	1 - M 4
VALVE, THERMO	13980A	1364BA-1	1 - D 5
	13980A	1364B -1	1 - C 5
VALVE, THROTTLE	19795	1925 -1	1 - C 9
VALVE, THROTTLE BACK-UP	19797	1925 -1	1 - C 9
VALVE, VACUUM DELAY	20309	1364B -1	1 - C 5
VALVE, VARIABLE PORT	131601	1300B -1	1 - M 3
VALVE, WATER	76416	6110 -1	2 - C14
VALVE-FUEL VAPOR	42720	4200 -1	1 - G15
VESSEL (L), CHANNEL	684262	5840AB-2	2 - L13
VESSEL (R), CHANNEL	68424	5840AB-2	2 - L13
* * * W * * *			
WALL (L), SIDE	642302	5570 -1	2 - I 7
WALL (R), SIDE	64230	5570 -1	2 - I 7
WASHER		6132A -1	2 - G14
		6132A -1	2 - G14
		6142A -1	2 - I14
		6142A -1	2 - I14
		6152A -1	2 - J14
		6152A -1	2 - J14
	19433	1950 -1	1 - I 9
	19641A	1930 -2	1 - F 9
	27012	2710 -1	1 - H11
	27012	2710C -1	1 - L11
	27012	2710A -1	1 - J11
	27252	2710 -1	1 - H11
	27252	2710C -1	1 - L11
	27252	2710A -1	1 - J11
	28401	2800 -1	1 - N11
	28401	2800B -1	1 - D12
	28401	2800A -1	1 - C12
	34662	2800A -1	1 - C12
	34662	2800 -1	1 - N11
	34662	2800B -1	1 - D12
	39036	3400 1	1 - D14
	39364	3900B 1	1 - J14
	39364	3900BA-1	1 - K14
	40166	4000B -1	1 - L14
	40166	4000BA-1	1 - C15
	40357D	4000B -1	1 - L14
	40815A	4000BA-1	1 - C15
	40815A	4000B -2	1 - M14
	50044	5000 -1	2 - E 3
	68413D	5840A -1	2 - C13
	68413D	5840AB-1	2 - K13
	68964A	5840A -7	2 - I13
	68964A	5840AB-3	2 - M13
	68964B	5840A -7	2 - I13
	68964B	5840AB-3	2 - M13
	87132A	6750 -1	3 - K 4
	87804	6750 -1	3 - K 4
WASHER (L), STOP-LOWER ARM	28845Z	2830 -1	1 - F12
WASHER (R), STOP-LOWER ARM	28845	2830 -1	1 - F12
WASHER SET	24726	1840BA-1	1 - I 8
	24726	1840B -1	1 - H 8
WASHER, BALANCE WEIGHT	25901	2500 -1	1 - C11
WASHER, CLAW	26043	3300 -3	1 - G13
	26043	3300A -2	1 - J13
	26043	3300B -2	1 - L13
WASHER, CONTACT SPRING	66119	6611 -1	2 - N15
WASHER, COVER-SPARE TIRE	50764A	6860AB-1	3 - E 6
WASHER, HINGE	88106G	5700AC-3	2 - H10
	88106G	5700A -4	2 - F 8
	88106G	5700AA 9	2 - K 9
	88106G	5700AB-2	2 - D10
WASHER, HOOD	507M2	5230 -1	2 - K 4
WASHER, HOOK-HOOD COVER	R1926	6330A -2	2 - F15
WASHER, HYDRAULIC UNIT	437A8	4370 2	1 - E16
WASHER, LOCK	20548A	4000BA-1	1 - C15
WASHER, LOCK-PUMP FILTER	13ZE4	1320B -2	1 - H 4
	13ZE4	1320BA-2	1 - J 4
WASHER, LOCK-TURBO CHARGER	13457	1310BA-2	1 - E 4
WASHER, LOWER UNIT-SUNROOF	699W9	6330 -2	2 - D15
WASHER, MOUNTING RUBBER-DIFFERENTIAL	28896	2830 -1	1 - F12
WASHER, PLAIN	19337	1920 -1	1 - L 8
	19739	1920 -2	1 - M 8
	20523	1310BA-3	1 - F 4
	20523	4000BA-1	1 - C15
	26114B	2600 -1	1 - E11
	76474A	6120 -1	2 - E14
WASHER, PLAIN-DUST COVE.	33981A	3300B -2	1 - L13
	33981A	3300A -2	1 - J13
	33981A	3300 -3	1 - G13
WASHER, PLAIN-LOWER ARM	26137	2600 1	1 - E11
	26137	3300A 2	1 J13
	26137	3300B 2	1 L13
	26137	3900B 1	1 - J14
	26137	3900BA 1	1 K14
WASHER, PLAIN-REAR BRAKE	26122	2610 -1	1 - F11
WASHER, ROOF MOULDING	R1906A	5000 -1	2 E 3
WASHER, RUBBER	13431A	5230 -1	2 K 4
	64904	5560 2	2 G 7
WASHER SEAL	104551	1040BA 1	1 H 3
	104551	1040B 1	1 G 3
	21665	1910 -1	1 K 8
WASHER SLEEVE-REAR BRAKE	26122C	2600 -1	1 E11
WASHER SPRING LOWER ARM	39023	2650 1	1 E11
WASHER STOP	26880A	2830 1	1 F12
	32168A	3210 1	1 J12
	32168A	3210A 1	1 J12
WASHER THRUST	115071	1100BA 1	1 J 3
	115071	1100B 1	1 I 3
WASHER, THRUST LOCK-OVERTOP GEAR	17276	1710A -1	1 G 7
	17276	1710 -1	1 D 7
	17313B	1710 -2	1 - E 7
	17651	1710 -2	1 - E 7
	17651	1710A -3	1 I 7
	27256	2710 -1	1 - H11
WASHER, THRUST LOCK-OVERTOP GEAR	17631	1710 -2	1 - E 7
	17631	1710A -2	1 - H 7
WASHER, THRUST-REVERSE IDLE GEAR	17313	1710 -2	1 - E 7
	17313	1710A -2	1 - H 7
WASHER WAVE-CHANGE CONTROL CASE	17482	1720A -1	1 - K 7
	17482	1720 -1	1 J 7
WAX	13W87	1364B -1	1 - C 5
	13W87	1364BA-1	1 - D 5
WEATHERSTRIP (L)	58651Z	5800AA-1	2 - K11
WEATHERSTRIP (L), CABIN SIDE	58771Y	5800AA-1	2 - K11
WEATHERSTRIP (L), DOOR	58760Z	5800A -1	2 - J11
	58760Z	5800AA-1	2 - K11
WEATHERSTRIP (L), INNER	58821Z	5840AB-1	2 - K13
	58821Z	5840A -1	2 - C13
WEATHERSTRIP (L), OUTER	58811Z	5840AB-1	2 - K13
	58811Z	5840A -1	2 - C13
WEATHERSTRIP (L), RAIN RAIL	58831X	5800A -1	2 - J11
WEATHERSTRIP (L), ROOF PANEL	R1952A	6330A -2	2 - F15
WEATHERSTRIP (R)	58651	5800AA-1	2 - K11
WEATHERSTRIP (R), DOOR	58760	5800AA-1	2 - K11
	58760	5800A -1	2 - J11
WEATHERSTRIP (R), INNER	58821	5840AB-1	2 - K13
	58821	5840A -1	2 - C13
WEATHERSTRIP (R), OUTER	58811	5840AB-1	2 - K13
	58811	5840A -1	2 - C13
WEATHERSTRIP (R), RAIN RAIL	58831B	5800A -1	2 - J11
WEATHERSTRIP (R), ROOF	58771	5800AA-1	2 - K11
WEATHERSTRIP (R), ROOF PANEL	R1951A	6330A -2	2 - F15
WEATHERSTRIP FRONT HEADER	R1711	6330A -1	2 - E15
WEATHERSTRIP GLASS HATCH	62761B	6230 -1	2 - L14
WEATHERSTRIP HOMING BAR-FRONT	R1721	6330A -1	2 - E15
WEATHERSTRIP LID	56991E	5260 -1	2 - L 4
WEATHERSTRIP RR WINDOW	63932	6300A -1	2 - N14
WEATHERSTRIP SUNROOF	69895	6330 -1	2 - C15
WEIGHT BALANCE	115111	1100B -1	1 - I 3
	115111	1100BA-1	1 J 3
WEIGHT COUNTER	117501	1100B -1	1 - I 3
WEIGHT DISC WHEEL-ALUM	37600K	3700A -1	1 H14
	37600K	3700 -2	1 - F14
WEIGHT DISC WHEEL STEEL	37600E	3700 1	1 - E14
WEIGHT TRANSMISSION BRACKET	39349C	3900B 1	1 - J14
	39349C	3900BA-1	1 - K14
WELT (L) SEAMING	68901Y	5800AA 2	2 - L11
	68901Y	5800A -1	2 - J11
	72511Y	5800AA-2	2 L11
WELT (L) SEAMING GLASS HATCH	63912	6230 -2	2 M14
WELT (R) SEAMING	68901A	5800A 1	2 J11
	68901A	5800AA 1	2 - K11
	72511A	5800AA-2	2 L11
WELT (R) SEAMING GLASS HATCH	62912	6230 2	2 M14
WELT SEAMING	68915	6330 1	2 C15
WELT SEAMING GLASS HATCH LWR	62913	6230 2	2 M14
WELT SEAMING GLASS HATCH UPPER	62911	6230 2	2 M14
WELT SEAMING JACK	56172	3400A 2	1 H14
	56172	3700 3	1 G14
WELT SEAMING ROOF	68032F	6800AB 1	3 N 4
WHEEL SET (L) DISC ALUM	37600U	3700A 1	1 H14
WHEEL SET (L) DISC ALUM	37600U	3700 3	1 G14
WHEEL SET (R) DISC ALUM	37600T	3700A 1	1 H14
WHEEL SET (R) DISC ALUM	37600T	3700 3	1 G14

ALPHABETICAL INDEX

ALPHABETICAL INDEX

PART NAME	D-CODE	SECTION	LOCATION
WHEEL SET (R) DISC ALUM	37600T	3700 -2	1 - F14
WHEEL SET, DISC-ALUM	37600S	3700 -2	1 - F14
WHEEL, DISC-ALUM	37600Z	3700A -1	1 - H14
	37600Z	3700 -3	1 - G14
WHEEL DISC-STEEL	37600	3700 -1	1 - E14
WHEEL, SPROCKET	14143	1400B -1	1 - C 6
	14143	1400BA-1	1 - E 6
WIRE SET, HIGH TENSION	18140	1800BA-2	1 - D 8
	18140	1800B -2	1 - M 7
WIRE A C C	66311	6640 -1	2 - H16
WIRE, EARTH-FILLER PIPE	42289	4200 -1	1 - G15
WIRE, EARTH-HYDRAULIC UNIT	437A9	4370 -2	1 - E16
WIRE, HIGH TENSION (L-1)	181701	1800BA-2	1 - D 8
	181701	1800B -2	1 - M 7
WIRE HIGH TENSION (L-2)	181801	1800B -2	1 - M 7
	181801	1800BA-2	1 - D 8
WIRE, HIGH TENSION (T-1)	181301	1800BA-2	1 - D 8
	181301	1800B -2	1 - M 7
WIRE, HIGH TENSION (T-2)	181401	1800BA-2	1 - D 8
	181401	1800B -2	1 - M 7
WIRE, RELEASE	88108T	5700A -4	2 - F 8
	88108T	5700AC-3	2 - H10
	88108T	5700AA-10	2 - L 9
	88108T	5700AB-2	2 - D10
WIRE, RELEASE-HOOD	56710	5230 -1	2 - K 4
WIRE, REMOTE CONTROL MIRROR	69137	6900A -3	3 - E 7
WIRING, ANTI-LOCK BRAKE SYSTEM	67230	4370 -2	1 - E16
WIRING, ENGINE	18050	6701A -1	3 - K 3
	18050	6701 -1	3 - J 3
	18050	6701B -1	3 - J 3
WIRING, HARNESS-DRIVER SIDE	67190J	6703 -1	3 - D 4
WIRING, HARNESS-PASSENGER SIDE	67200D	6703 -1	3 - D 4
WIRING, STORAGE	67240E	6700A -1	3 - H 3
	67240E	6700 -1	3 - G 3
WRENCH, HUB NUT	68070	6870 -1	3 - J 6
WRENCH, WHEEL CAP	68071	3700 -3	1 - G14
	68071	6870 -1	3 - J 6

* * * Y * * *

YOKE	24701	1840BA-1	1 - I 8
	24701	1840B -1	1 - H 8
YOKE, DIFFERENTIAL	27270	2710 -1	1 - H11
	27270	2710A -1	1 - J11
YOKE, SUPPORT	32111	3220A -1	1 - L12

PART NUMBER INDEX

PART NUMBER INDEX

This index is listed in the following sequence.

GENERAL PARTS

EXAMPLE

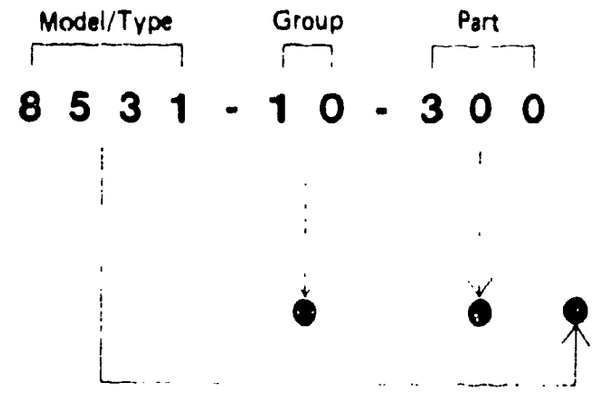

- first, in the sequenece of group (5th & 6th digits)
- second, in the sequence of part (7th–9th digits)
- third, in the sequence of model/type (1st–4th digits)

STANDARD PARTS

Standard Parts are listed in numerical sequence after General Parts.
(Note: Those parts which do not have D-Code are not listed in the index.)

PART NUMBER INDEX

PART NUMBER	SECTION	LOCATION
99236-0571	1100BA-1	1 - J 3
99511-1400	1040B -1	1 - G 3
99511-1400	1040BA-1	1 - H 3
99705-1120	6700 -1	3 - G 3
9983-00-525	6152A -1	2 - J14
9978-01-285	3400 -1	1 - M13
N332-02-200B	1000BA-1	1 - D 3
N326-02-2000	1000B -1	1 - C 3
N327-02-2000	1000B -1	1 - C 3
FB01-09-010C	0900A -1	2 - C 3
FB01-09-010C07	0900A -1	2 - C 3
FB01-09-010C10	0900A -1	2 - C 3
FB01-09-010C48	0900A -1	2 - C 3
FB02-09-010C	0900A -1	2 - C 3
FB02-09-010C07	0900A -1	2 - C 3
FB02-09-010C10	0900A -1	2 - C 3
FB02-09-010C48	0900A -1	2 - C 3
FB67-09-010B	0900A -1	2 - C 3
FB67-09-010B07	0900A -1	2 - C 3
FB67-09-010B48	0900A -1	2 - C 3
FB68-09-010B	0900A -1	2 - C 3
FB68-09-010B07	0900A -1	2 - C 3
FB68-09-010B48	0900A -1	2 - C 3
9965-09-405	3700 -3	1 - G14
9965-09-406	3700 -1	1 - E14
0839-10-105	1030B -1	1 - E 3
0839-10-105	1030BA-1	1 - F 3
1757-10-111	1030B -1	1 - E 3
1757-10-111	1030BA-1	1 - F 3
N231-10-173	1030B -1	1 - E 3
N231-10-173	1030BA-1	1 - F 3
N231-10-174	1040B -1	1 - G 3
N231-10-174	1040BA-1	1 - H 3
0839-10-203	1040B -1	1 - G 3
0839-10-203	1040BA-1	1 - H 3
8562-10-205	1040B -1	1 - G 3
8562-10-205	1040BA-1	1 - H 3
1757-10-206A	1040B -1	1 - G 3
1757-10-206A	1040BA-1	1 - H 3
1757-10-207A	1040B -1	1 - G 3
1757-10-207A	1040BA-1	1 - H 3
1757-10-208	1040B -1	1 - G 3
1757-10-208	1040BA-1	1 - H 3
N249-10-219	1040B -1	1 - G 3
N249-10-219	1040BA-1	1 - H 3
8871-10-250	1030B -1	1 - E 3
8871-10-250A	1030BA-1	1 - F 3
8871-10-252	1030B -1	1 - E 3
8871-10-252	1030BA-1	1 - F 3
8AF1-10-271B	1000B -1	1 - C 3
8AF4-10-271B	1000BA-1	1 - D 3
N225-10-305	1040B -1	1 - G 3
N225-10-305	1040BA-1	1 - H 3
1757-10-309	1040B -1	1 - G 3
1757-10-309	1040BA-1	1 - H 3
N326-10-323	1030B -1	1 - E 3
N326-10-323	1030BA-1	1 - F 3
N304-10-351	1040B -1	1 - G 3
N304-10-351	1040BA-1	1 - H 3
N326-10-400E	1040B -1	1 - G 3
N326-10-400E	1040BA-1	1 - H 3
N328-10-400E	1040B -1	1 - G 3
N328-10-400E	1040BA-1	1 - H 3
9965-10-406	3700 -1	1 - E14
9965-10-406	3700A -1	1 - H14
N225-10-415	1030B -1	1 - E 3
N225-10-415	1030BA-1	1 - F 3
8562-10-417	1030B -1	1 - E 3
8562-10-417	1030BA-1	1 - F 3
N326-10-420	1030B -1	1 - E 3
N332-10-420B	1030BA-1	1 - F 3
N318-10-424	1030BA-1	1 - F 3
N3Y6-10-427	1040B -1	1 - G 3
N3Y6-10-427	1040BA-1	1 - H 3
N318-10-441	1030BA-1	1 - F 3
N326-10-441	1030B -1	1 - E 3
N326-10-450B	1030B -1	1 - E 3
N332-10-450A	1030BA-1	1 - F 3
0839-10-455	1040B -1	1 - G 3
0839-10-455	1040BA-1	1 - H 3
N326-10-470	6600B -2	2 - H15
N326-10-470	6600BA-2	2 - K15
2306-10-481	1330B -1	1 - K 4
2306-10-481	1330BA-1	1 - L 4
3648-10-500	1030B -1	1 - E 3
3648-10-500	1030BA-1	1 - F 3
N318-10-500B	1040BA-1	1 - H 3
N326-10-500B	1040B -1	1 - G 3
0820-10-502B	1030B -1	1 - E 3
0820-10-502B	1030BA-1	1 - F 3
N326-10-506	1040B -1	1 - G 3
N326-10-506	1040BA-1	1 - H 3
9935-10-515	4500B -1	1 - G16
9935-10-515	4500BA-1	1 - H16
9935-10-540	4500BA-1	1 - H16
3648-10-550A	1030B -1	1 - E 3
3648-10-550A	1030BA-1	1 - F 3
0813-10-555A	1030B -1	1 - E 3
0813-10-555A	1030BA-1	1 - F 3
1668-10-556A	1030B -1	1 - E 3
1668-10-556A	1030BA-1	1 - F 3
N318-10-566A	1040BA-1	1 - H 3
N318-10-570A	1040BA-1	1 - H 3
0820-10-605	1040B -1	1 - G 3
0820-10-605	1040BA-1	1 - H 3
1757-10-609	1040B -1	1 - G 3
1757-10-609	1040BA-1	1 - H 3
N249-10-619	1040B -1	1 - G 3
N249-10-619	1040BA-1	1 - H 3
8871-10-631	1040B -1	1 - G 3
8871-10-631A	1040BA-1	1 - H 3
8527-10-641	1040B -1	1 - G 3
8527-10-641	1040BA-1	1 - H 3
N231-10-735	6600B -2	2 - H15
N231-10-735	6600BA-2	2 - K15
N307-10-845	1040B -1	1 - C 3
N225-10-861	1040B -1	1 - G 3
N304-10-862	1040B -1	1 - G 3
N318-10-908	1040BA-1	1 - H 3
N326-10-B06	1030B -1	1 - E 3
N326-10-B06	1030BA-1	1 - F 3
N326-10-B10	1030B -1	1 - E 3
N332-10-B10	1030BA-1	1 - F 3
N326-10-B50C	1030B -1	1 - E 3
N332-10-B50B	1030BA-1	1 - F 3
N326-10-B71A	1030B -1	1 - E 3
N326-10-B71A	1030BA-1	1 - F 3
N326-10-B72	1030B -1	1 - E 3
N326-10-B72	1030BA-1	1 - F 3
N318-10-C00B	1040BA-1	1 - H 3
N326-10-C00C	1040B -1	1 - G 3
N318-10-C50A	1040BA-1	1 - H 3
N318-10-C50B	1040BA-1	1 - H 3
N326-10-C50B	1040B -1	1 - G 3
N326-10-D00B	1030B -1	1 - E 3
N332-10-D00B	1030BA-1	1 - F 3
N318-10-D10B	1030BA-1	1 - F 3
N326-10-E51	1040B -1	1 - G 3
N326-10-E51	1040BA-1	1 - H 3
N326-10-E52	1040B -1	1 - G 3
N326-10-E52	1040BA-1	1 - H 3
N318-10-S60	1000BA-1	1 - D 3
N326-10-S60	1000B -1	1 - C 3
N326-10-T11	6600B -2	2 - H15
N326-10-T11	6600BA-2	2 - K15
9954-10-1105	1100B -1	1 - I 3
9954-10-1105	1100BA-1	1 - J 3
9954-10-1401	3220 -1	1 - K12
9954-10-1401	3220A -1	1 - L12
9954-10-3501	1800B -2	1 - M 7
9954-10-3501	1800BA-2	1 - D 8
9935-10-4999	1320B -2	1 - H 4
9935-10-4999	1320BA-2	1 - J 4
9935-10-4999	1380B -4	1 - J 5
9935-10-4999	1380BA-4	1 - N 5
9935-10-4999	6600B -3	2 - I15
9935-10-4999	6600BA-3	2 - L15
9935-10-6999	1380BA-4	1 - N 5
9935-10-6999	4200 -1	1 - G15
9935-10-8445	4500BA-1	1 - H16
9935-10-8999	1320B -2	1 - H 4
9935-10-8999	1320BA-2	1 - J 4
9935-10-8999	1380B -4	1 - J 5
9935-10 8999	1380BA-4	1 - N 5
9997-11-0000	6142A -1	2 - I14
0000-11-0074	5540 -1	2 - M 6
0000-11-0074	5540A -1	2 - C 7
0000-11-0074	5540B -1	2 - E 7
0000-11-0089	5120 -1	2 - E 4
1011-11-111	1110B -1	1 - K 3
1011-11-111	1110BA-1	1 - L 3
0000-11-0194	5105 -1	2 - M 3
0000-11-0194	5120 -1	2 - E 4
0000-11-0194	5500 -1	2 - G 6
0000-11-0194	5500A -1	2 - I 6
0000-11-0194	5500B -1	2 - J 6
0000-11-0194	5540 -1	2 - M 6
0000-11-0194	5540A -1	2 - C 7
0000-11-0194	5540B -1	2 - E 7
0000-11-0194	5560 -1	2 - F 7
0000-11-0194	5570 -1	2 - I 7
0000-11-0194	5840A -1	2 - C13
0000-11-0194	5840AB-1	2 - K13
0000-11-0194	6845 -1	3 - K 5
1202-11-323	1110B -1	1 - K 3
1202-11-323	1110BA-1	1 - L 3
0820-11-341	1110B -1	1 - K 3
0820-11-341	1110B -1	1 - K 3
0820-11-341	1110BA-1	1 - L 3
1202-11-343	1110BA-1	1 - L 3
N225-11-351	1110B -1	1 - K 3
N225-11-351	1110BA-1	1 - L 3
1011-11-353A	1110B -1	1 - K 3
1011-11-353A	1110BA-1	1 - L 3
N225-11-361	1110B -1	1 - K 3
N225-11-361	1110BA-1	1 - L 3
1011-11-363A	1110B -1	1 - K 3
1011-11-363A	1110BA-1	1 - L 3
N326-11-400B	1100B -1	1 - I 3
N326-11-400B	1100BA-1	1 - J 3
1881-11-404	1100B -1	1 - I 3
1881-11-404	1100BA-1	1 - J 3
0839-11-412	1100B -1	1 - I 3
0839-11-412	1100BA-1	1 - J 3
N318-11-420A	1100B -1	1 - I 3
N318-11-420A	1100BA-1	1 - J 3
9961-11-500	4140B -1	1 - E15
N318-11-500A	1100BA-1	1 - J 3
N326-11-500	1100B -1	1 - I 3
1011-11-501	1100B -1	1 - I 3
1011-11-501	1100BA-1	1 - J 3
0839-11-502	1100B 1	1 - I 3
0839-11-502	1100BA-1	1 - J 3
N318-11-502A	1100BA-1	1 - J 3
1011-11-504	1100B -1	1 - I 3
1011-11-504	1100BA-1	1 - J 3
0813-11-505B	1100B -1	1 - I 3
0813-11-505B	1100BA-1	1 - J 3
0839-11-506	1100B -1	1 - I 3
0839-11-506	1100BA-1	1 - J 3
1011-11-507	1100B -1	1 - I 3
1011-11-507	1100BA-1	1 - J 3
0839-11-508	1100B -1	1 - I 3
0839-11-508	1100BA-1	1 - J 3
0839-11-509	1100B -1	1 - I 3
0839-11-509	1100BA-1	1 - J 3
8519-11-517	1100B -1	1 - I 3
8519-11-517	1100BA 1	1 - J 3
N327-11-521A	1100B -1	1 - I 3
0839-11-531	1100B -1	1 - I 3
0839-11-531	1100BA-1	1 - J 3
0866-11-702	1100B -1	1 - I 3
0820-11-705	1100B -1	1 - I 3
0820-11-705	1100BA-1	1 - J 3
0810-11-711	1100B -1	1 - I 3
0810-11-711	1100BA-1	1 - J 3
N3Y6-11-B00	1110B -1	1 - K 3
N3Y2-11-B10A	1110BA-1	1 - L 3
N3Y6-11-B10	1110B -1	1 - K 3
N326-11-C00B	1110B -1	1 - K 3
N326-11-C00B	1110BA-1	1 - L 3
N326-11-C02	1110B -1	1 - K 3
N326-11-C02A	1110BA-1	1 - L 3
N326-11-C03	1110BA-1	1 - L 3
N326-11-C03A	1110B -1	1 - K 3
N326-11-C04A	1110B -1	1 - K 3
N326-11-C04A	1110BA-1	1 - L 3
N326-11-C06A	1110B -1	1 - K 3
N326-11-C06A	1110BA-1	1 - L 3
N3Y1-11-C11	1110BA-1	1 - L 3
N3Y6-11-C11	1110B -1	1 - K 3
N326-11-C17	1110B -1	1 - K 3
N326-11-C17	1110BA-1	1 - L 3
N326-11-C20A	1110B -1	1 - K 3
N326-11-C20A	1110BA-1	1 - L 3
N326-11-C22A	1110B -1	1 - K 3
N326-11-C22A	1110BA-1	1 - L 3
N326-11-D00A	1100B -1	1 - I 3
N326-11-D00A	1100BA-1	1 - J 3
N327-11-D00A	1100B -1	1 - I 3
N326-11-D03	1100B -1	1 - I 3
N326-11-D03	1100BA-1	1 - J 3
N326-11-D11	1100B -1	1 - I 3
N326-11-D11	1100BA-1	1 - J 3
N326-11-D15	1100B -1	1 - I 3
N326-11-D15	1100BA-1	1 - J 3
N326-11-D17	1100B -1	1 - I 3
N326-11-D17	1100BA-1	1 - J 3
N326-11-D61A	1100B -1	1 - I 3
N326-11-D61A	1100BA-1	1 - J 3
N326-11-D75	1100B -1	1 - I 3
N326-11-D75	1100BA-1	1 - J 3
0000-11-1156	5110A -1	2 - C 4
0000-11-3022	5125 -1	2 - F 4
0000-11-3175	6900A -3	3 - E 7

PART NUMBER INDEX

PART NUMBER	SECTION	LOCATION
0000-11-6052	5100 -1	2 - K 3
0000-11-6054-HP	5100 -1	2 - K 3
8871-13-087A	6640 -1	2 - H16
N326-13-100D	1300B -1	1 - M 3
N332-13-100A	1300BA-1	1 - N 3
N334-13-100A	1300BA-1	1 - N 3
1010-13-104	1300B -1	1 - M 3
1010-13-104	1300BA-1	1 - N 3
N326-13-104	1330B -1	1 - K 4
8AF1-13-111A	1000B -1	1 - C 3
8AF3-13-111A	1000BA-1	1 - D 3
N318-13-111C	1300BA-1	1 - N 3
N326-13-111	1300B -1	1 - M 3
N318-13-112	1300BA-1	1 - N 3
N326-13-112	1300B -1	1 - M 3
8527-13-113	1300BA-1	1 - N 3
N326-13-130A	1300B -1	1 - M 3
N332-13-130C	1300BA-1	1 - N 3
N326-13-135	1300B -1	1 - M 3
N319-13-140D	1300BA-1	1 - N 3
N326-13-151A	1320B -1	1 - G 4
N327-13-151	1320B -1	1 - G 4
N332-13-151	1320BA-1	1 - I 4
N333-13-151	1320BA-1	1 - I 4
N326-13-153	1320B -1	1 - G 4
N326-13-153	1320BA-1	1 - I 4
8574-13-157	1320B -1	1 - G 4
8574-13-157	1320BA-1	1 - I 4
8574-13-157	4500B -1	1 - G16
8574-13-157	4500BA-1	1 - H16
N326-13-158	1320B -1	1 - G 4
N326-13-158	1320BA-1	1 - I 4
N225-13-160A	1300B -1	1 - M 3
N318-13-164A	1310BA-2	1 - E 4
N318-13-164A	1320BA-1	1 - I 4
N318-13-164A	4000BA-1	1 - C15
N326-13-164	1320B -1	1 - G 4
N326-13-164	1320BA-1	1 - I 4
N326-13-165	1320B -1	1 - G 4
N326-13-165	1320BA-1	1 - I 4
N225-13-171	1380B -3	1 - I 5
N225-13-173A	1300B -1	1 - M 3
N326-13-17X	1350B -1	1 - M 4
N326-13-17X	1350BA-1	1 - N 4
N225-13-184	1300B -1	1 - M 3
N225-13-186	1300B -1	1 - M 3
N304-13-187	1300B -1	1 - M 3
N225-13-188A	1300B -1	1 - M 3
N326-13-201D	1330B -1	1 - K 4
N326-13-201D	1330BA-1	1 - L 4
N326-13-202A	1330B -1	1 - K 4
N326-13-202A	1330BA-1	1 - L 4
1481-13-205C	1330B -1	1 - K 4
N318-13-210	1330BA-1	1 - L 4
N326-13-210	1330B -1	1 - K 4
N326-13-211C	1330B -1	1 - K 4
N326-13-211C	1330BA-1	1 - L 4
8341-13-215	1364B -1	1 - C 5
N319-13-220A	1330BA-1	1 - L 4
N326-13-221A	1330B -1	1 - K 4
N326-13-222B	1330B -1	1 - K 4
N304-13-230	1320B -1	1 - G 4
N304-13-230	1320BA-1	1 - I 4
N326-13-23XE	1300B -1	1 - M 3
N328-13-23XD	1300B -1	1 - M 3
1481-13-240A	1380B -3	1 - I 5
1481-13-240A	1380BA-3	1 - M 5
1482-13-240A	1380B -3	1 - I 5
1482-13-240A	1380BA-3	1 - M 5
FE05-13-240	1330B -1	1 - K 4
N319-13-245A	1310BA-2	1 - E 4
N307-13-246	1380B -3	1 - I 5
N318-13-246C	1310BA-2	1 - E 4
N318-13-24XA	1310BA-2	1 - E 4
N318-13-250	1320BA-1	1 - I 4
N319-13-250	1320BA-1	1 - I 4
N326-13-250	1320B -1	1 - G 4
N327-13-250	1320B -1	1 - G 4
8574-13-252	1320B -1	1 - G 4
8574-13-252	1320BA-1	1 - I 4
8574-13-253	1320B -1	1 - G 4
8574-13-253	1320BA-1	1 - I 4
N236-13-253A	1330B -3	1 - I 5
N326-13-257	1320B -1	1 - G 4
N326-13-257	1320BA-1	1 - I 4
N236-13-260A	1320BA-1	1 - I 4
N305-13-260	1320B -1	1 - G 4
N236-13-261	1320BA-1	1 - I 4
N236-13-265	1330BA-1	1 - L 4
N318-13-275	1320BA-2	1 - J 4
N326-13-275B	1320B -2	1 - H 4
N318-13-280	1320BA-1	1 - I 4
N326-13-280	1320B -1	1 - G 4
N253-13-282	1320BA-1	1 - I 4
N304-13-283A	1380B -3	1 - I 5
N304-13-283A	1380BA-3	1 - M 5
N318-13-285	1320BA-1	1 - I 4
N326-13-285	1320B -1	1 - G 4
N304-13-291	1320B -1	1 - G 4
N304-13-291	1320BA-1	1 - I 4
N318-13-295A	1320BA-1	1 - I 4
N326-13-295B	1320B -1	1 - G 4
N326-13-320B	1330B -1	1 - K 4
N326-13-320B	1330BA-1	1 - L 4
N318-13-324	1310BA-2	1 - E 4
FE51-13-329	1330B -1	1 - K 4
FE51-13-329	1330BA-1	1 - L 4
2850-13-331	1910 -1	1 - K 8
N318-13-332B	1310BA-2	1 - E 4
N318-13-350A	1320BA-1	1 - I 4
N326-13-350A	1320B -1	1 - G 4
FE51-13-363	1330B -1	1 - K 4
FE51-13-363	1330BA-1	1 - L 4
N236-13-363	1320B -1	1 - G 4
N236-13-363	1320BA-1	1 - I 4
N318-13-363	1310BA-2	1 - E 4
N326-13-363A	1380B -3	1 - I 5
N326-13-363A	1380BA-3	1 - M 5
N327-13-363	1800B -2	1 - M 7
N327-13-363	1800BA-2	1 - D 8
0552-13-377	1320B -1	1 - G 4
N332-13-380C	1310BA-2	1 - E 4
N332-13-38XC	1310BA-2	1 - E 4
N326-13-390B	1310B -1	1 - C 4
N332-13-390A	1310BA-2	1 - E 4
N326-13-3D0C	1380B -3	1 - I 5
N326-13-410	1320B -1	1 - G 4
D410-13-413	1500B -1	1 - G 6
D410-13-413	1500BA-1	1 - I 6
N326-13-416	1320B -1	1 - G 4
N326-13-416	1320BA-1	1 - I 4
8574-13-422	1320B -1	1 - G 4
8574-13-422	1320BA-1	1 - I 4
FE87-13-428	1320B -1	1 - G 4
FE87-13-428	1320BA-1	1 - I 4
N318-13-428	1320BA-1	1 - I 4
N326-13-428A	1320B -1	1 - G 4
N326-13-428A	1320BA-1	1 - I 4
0118-13-431	5230 -1	2 - K 4
N326-13-431B	1320B -1	1 - G 4
N326-13-431B	1320BA-1	1 - I 4
N326-13-447	1320BA-1	1 - I 4
N326-13-447	1380B -3	1 - I 5
N326-13-447	1380BA-3	1 - M 5
N326-13-450	1310B -1	1 - C 4
N332-13-450A	1310BA-2	1 - E 4
N318-13-453B	1310BA-2	1 - E 4
N318-13-456	1310BA-2	1 - E 4
N318-13-457	1310BA-2	1 - E 4
N319-13-457B	4000BA-1	1 - C15
N318-13-461	1310BA-2	1 - E 4
N326-13-461	1310B -1	1 - C 4
N236-13-483	1310BA-2	1 - E 4
N236-13-483	1320B -1	1 - G 4
N236-13-483	1320BA-1	1 - I 4
N326-13-483	1320B -1	1 - G 4
N326-13-483	1320BA-1	1 - I 4
N318-13-491A	4000BA-1	1 - C15
B630-13-496	4500B -1	1 - G16
FE69-13-496	1320B -1	1 - G 4
E5A1-13-497A	4500B -1	1 - G16
E5A1-13-497A	4500BA-1	1 - H16
N327-13-497	1320B -1	1 - G 4
N318-13-498	1320BA-1	1 - I 4
N326-13-49XC	1320B -1	1 - G 4
N326-13-49XC	1320BA-1	1 - I 4
1881-13-510G	1350B -1	1 - M 4
1881-13-510G	1350BA-1	1 - N 4
N318-13-530	1310BA-2	1 - E 4
N319-13-530A	1310BA-2	1 - E 4
N319-13-540	1310BA-2	1 - E 4
N318-13-546	1310BA-2	1 - E 4
N332-13-550	1310BA-2	1 - E 4
N318-13-555A	1310BA-2	1 - E 4
N319-13-556A	1310BA-2	1 - E 4
N318-13-557	1310BA-2	1 - E 4
N318-13-56X	1310BA-3	1 - F 4
N253-13-607A	1310BA-2	1 - E 4
N236-13-631	1310BA-2	1 - E 4
N236-13-638	1310BA-2	1 - E 4
N236-13-639	1310BA-2	1 - E 4
N319-13-645A	1380BA-3	1 - M 5
N326-13-645A	1380B -3	1 - I 5
N326-13-650A	1380B -3	1 - I 5
N327-13-650A	1380B -3	1 - I 5
N332-13-650	1380BA-3	1 - M 5
N318-13-660A	1300BA-1	1 - N 3
N326-13-660	1300B -1	1 - M 3
N326-13-680A	1380B -3	1 - I 5
N318-13-681	1380BA-3	1 - M 5
N318-13-700C	1310BA-2	1 - E 4
N332-13-70YA	1310BA-2	1 - E 4
N304-13-710	1371B -1	1 - E 5
N318-13-711	1310BA-2	1 - E 4
N304-13-715	1371B -1	1 - E 5
N304-13-718A	1371B -1	1 - E 5
N327-13-720A	1380B -3	1 - I 5
N332-13-720	1380BA-3	1 - M 5
N304-13-724A	1371B -1	1 - E 5
1480-13-726	1330B -1	1 - K 4
1480-13-726	1330BA-1	1 - L 4
N304-13-726	1371B -1	1 - E 5
N304-13-726	1371BA-1	1 - F 5
N304-13-726	1380B -3	1 - I 5
N304-13-726	1380BA-3	1 - M 5
1480-13-730	1371B -1	1 - E 5
1480-13-730	1371BA-1	1 - F 5
FEH4-13-736	1310BA-2	1 - E 4
N318-13-736A	1310BA-2	1 - E 4
N326-13-740	1380B -3	1 - I 5
N326-13-740B	1380B -3	1 - I 5
N332-13-741	1380BA-3	1 - M 5
N236-13-742	1330B -1	1 - K 4
N319-13-742	1380BA-3	1 - M 5
N326-13-742A	1380B -3	1 - I 5
N318-13-743	1330BA-1	1 - L 4
N318-13-744A	1380BA-3	1 - M 5
N236-13-746A	1310BA-2	1 - E 4
N319-13-750A	1380BA-3	1 - M 5
N326-13-750A	1380B -3	1 - I 5
N326-13-752A	1380BA-3	1 - M 5
N326-13-753A	1380B -3	1 - I 5
N326-13-753A	1380BA-3	1 - M 5
N326-13-755	1380B -3	1 - I 5
N332-13-755A	1380BA-3	1 - M 5
N304-13-760B	1380BA-3	1 - M 5
N304-13-761A	1380BA-3	1 - M 5
N332-13-761B	1380BA-3	1 - M 5
N332-13-762B	1380BA-3	1 - M 5
N318-13-765A	1330BA-1	1 - L 4
N326-13-765	1380B -3	1 - I 5
N326-13-766A	1380B -3	1 - I 5
N318-13-772	1380BA-3	1 - M 5
N326-13-772	1380B -3	1 - I 5
N326-13-773A	1330B -1	1 - K 4
N326-13-785	1380B -3	1 - I 5
N326-13-785	1380BA-3	1 - M 5
N236-13-790B	1330B -1	1 - K 4
N236-13-790B	1330BA-1	1 - L 4
N332-13-810	1371BA-1	1 - F 5
N326-13-812	1371B -1	1 - E 5
N332-13-812A	1371BA-1	1 - F 5
N332-13-813A	1371BA-1	1 - F 5
N332-13-814A	4000BA-1	1 - C15
N326-13-815	4000B -1	1 - L14
N318-13-887A	1380BA-3	1 - M 5
N326-13-887	1380B -3	1 - I 5
N326-13-921	1371B -1	1 - E 5
N332-13-921A	1371BA-1	1 - F 5
1700-13-945A	6600B -2	2 - H15
E5B6-13-945	1350BA-1	1 - N 4
N326-13-961A	1320B -1	1 - G 4
N326-13-961A	1320BA-2	1 - J 4
N326-13-970	1320B -2	1 - H 4
N326-13-970	1320BA-2	1 - J 4
N326-13-971	1320B -2	1 - H 4
N326-13-971	1320BA-2	1 - J 4
8712-13-980	1380B -3	1 - I 5
N236-13-980A	1364B -1	1 - C 5
N304-13-980A	1364B -1	1 - C 5
N304-13-980A	1364BA-1	1 - D 5
N326-13-980	1364B -1	1 - C 5
8931-13-986	6600B -2	2 - H15
8931-13-986	6600BA-2	2 - K15
N326-13-990	1371B -1	1 - E 5
N327-13-990	1371B -1	1 - E 5
N332-13-990	1371BA-1	1 - F 5
HE41-13-995	1364B -1	1 - C 5
HE41-13-995	1364BA-1	1 - D 5
N318-13-996	1371BA-1	1 - F 5
N326-13-A5YB	1350B -1	1 - M 4
N326-13-A5YB	1350BA-1	1 - N 4
N326-13-A61	1350B -1	1 - M 4
N326-13-A61	1350BA-1	1 - N 4
N326-13-A63B	1350B -1	1 - M 4

PART NUMBER INDEX

PART NUMBER	SECTION	LOCATION
N332-13-A63	1350BA-1	1 - N 4
N326-13-A64	1350B -1	1 - M 4
N332-13-A64B	1350BA-1	1 - N 4
N326-13-A65A	1350B -1	1 - M 4
N332-13-A65C	1350BA-1	1 - N 4
N326-13-A66	1350B -1	1 - M 4
N326-13-A66	1350BA-1	1 - N 4
N326-13-A6YC	1350B -1	1 - M 4
N332-13-A6YB	1350BA-1	1 - N 4
N326-13-B70B	1380B -3	1 - I 5
N326-13-B80A	1300B -1	1 - M 3
N327-13-B80A	1300B -1	1 - M 3
N326-13-B90A	1380B -3	1 - I 5
N326-13-B96A	1380B -3	1 - I 5
N326-13-C60	1320B -1	1 - G 4
N326-13-C60	1320BA-1	1 - I 4
N326-13-C80A	1310B -1	1 - C 3
N326-13-C90A	1380B -3	1 - I 5
N326-13-C90A	1380BA-3	1 - M 5
N326-13-W60	1364B -1	1 - C 5
N327-13-W60	1364B -1	1 - C 5
N332-13-W60	1364BA-1	1 - D 5
N327-13-W61	1364B -1	1 - C 5
N332-13-W61	1364BA-1	1 - D 5
N326-13-W64	1364B -1	1 - C 5
N330-13-W64	1364BA-1	1 - D 5
N326-13-W68	1364B -1	1 - C 5
N326-13-W68	13643A-1	1 - D 5
N326-13-W69	1364B -1	1 - C 5
N326-13-W69	1364BA-1	1 - D 5
N326-13-W6X	1364B -1	1 - C 5
N327-13-W6X	1364B -1	1 - C 5
N330-13-W6X	1364BA-1	1 - D 5
N326-13-W76	1364B -1	1 - C 5
N326-13-W7Y	1364B -1	1 - C 5
N327-13-W7Y	1364B -1	1 - C 5
N326-13-W80	1364B -1	1 - C 5
N331-13-W80	1364BA-1	1 - D 5
N326-13-W87	1364B -1	1 - C 5
N326-13-W87	1364BA-1	1 - D 5
N326-13-W89	1364B -1	1 - C 5
N330-13-W89	1364BA-1	1 - D 5
N326-13-W8Y	1364B -1	1 - C 5
N327-13-W8Y	1364B -1	1 - C 5
N332-13-W8Y	1364BA-1	1 - D 5
N326-13-Z01	1330B -1	1 - K 4
N326-13-Z01	1330BA-1	1 - L 4
N326-13-Z34A	1330B -1	1 - K 4
N326-13-Z34A	1330BA-1	1 - L 4
N326-13-Z40	1330B -1	1 - K 4
N326-13-Z40	1330BA-1	1 - L 4
N327-13-ZE1	1320B -2	1 - H 4
N327-13-ZE1	1320BA-2	1 - J 4
FEH2-13-ZE1	1320B -2	1 - H 4
FEH2-13-ZE1	1320BA-2	1 - J 4
N318-14-100A	1400BA-1	1 - E 6
N326-14-100A	1400B -1	1 - C 6
0810-14-113	1400B -1	1 - C 6
0810-14-113	1400BA-1	1 - E 6
0221-14-115	1400B -1	1 - C 6
0221-14-115	1400BA-1	1 - E 6
0839-14-115	1040B -1	1 - G 3
0839-14-115	1040BA-1	1 - H 3
0221-14-116	1400B -1	1 - C 6
0221-14-116	1400BA-1	1 - E 6
N326-14-117	1400B -1	1 - C 6
N326-14-117	1400BA-1	1 - E 6
0839-14-119B	1400B -1	1 - C 6
0839-14-119B	1400BA-1	1 - E 6
8553-14-125	1400B -1	1 - C 6
8553-14-125	1400BA-1	1 - E 6
N318-14-126	1400BA-1	1 - E 6
N326-14-131	1400B -1	1 - C 6
N326-14-131	1400BA-1	1 - E 6
N318-14-135	1400BA-1	1 - E 6
N318-14-135A	1400BA-1	1 - E 6
N326-14-135	1400B -1	1 - C 6
N326-14-135A	1400B -1	1 - C 6
N318-14-140	1400BA-1	1 - E 6
N326-14-140	1400B -2	1 - D 6
N326-14-143	1400B -1	1 - C 6
N326-14-143	1400BA-1	1 - E 6
N326-14-151	1400B -1	1 - C 6
N326-14-151	1400BA-1	1 - E 6
0810-14-171A	1400B -1	1 - C 6
0810-14-171A	1400BA-1	1 - E 6
N326-14-240A	1400B -1	1 - C 6
N326-14-240A	1400BA-1	1 - E 6
N326-14-240B	1400B -1	1 - C 6
N326-14-240B	1400BA-1	1 - E 6
3648-14-250	1400B -1	1 - C 6
3648-14-250	1400BA-1	1 - E 6
N318-14-260	1040BA-1	1 - H 3
N318-14-264	1040BA-1	1 - H 3
N318-14-270B	1310BA-2	1 - E 4
0839-14-273A	1040B -1	1 - G 3
0839-14-273A	1040BA-1	1 - H 3
0839-14-274	1040B -1	1 - G 3
0839-14-274	1040BA-1	1 - H 3
9970-14-278	5105 -1	2 - M 3
9970-14-278	5110A -1	2 - C 4
N318-14-280C	1310BA-2	1 - E 4
N318-14-290	1310BA-2	1 - E 4
N326-14-302	1400B -2	1 - D 6
N326-14-302	1400BA-2	1 - F 6
8341-14-310	1400B -1	1 - C 6
8341-14-310	1400BA-1	1 - E 6
N246-14-600	1400B -1	1 - C 6
N318-14-600	1400BA-1	1 - E 6
N236-14-602A	1400B -1	1 - C 6
N236-14-602A	1400BA-1	1 - E 6
N236-14-603B	1400B -1	1 - C 6
N236-14-603B	1400BA-1	1 - E 6
N236-14-604	1400B -1	1 - C 6
N236-14-604	1400BA-1	1 - E 6
N318-14-606A	1400BA-1	1 - E 6
N326-14-606A	1400B -1	1 - C 6
N318-14-607	1400BA-1	1 - E 6
N326-14-607A	1400B -1	1 - C 6
N318-14-608	1400BA-1	1 - E 6
N326-14-608B	1400B -1	1 - C 6
N318-14-609	1400BA-1	1 - E 6
N326-14-609A	1400B -1	1 - C 6
N318-14-616A	1400BA-1	1 - E 6
N326-14-616A	1400B -1	1 - C 6
N326-14-617	1400B -1	1 - C 6
N326-14-617	1400BA-1	1 - E 6
0820-14-620A	1400B -1	1 - C 6
0820-14-620A	1400BA-1	1 - E 6
0813-14-623	1400B -1	1 - C 6
0813-14-623	1400BA-1	1 - E 6
0820-14-625A	1400B -1	1 - C 6
0820-14-625A	1400BA-1	1 - E 6
N326-14-631	1400B -1	1 - C 6
N326-14-631	1400BA-1	1 - E 6
N326-14-633	1030B -1	1 - E 3
N326-14-633	1030BA-1	1 - F 3
N236-14-635A	1400B -1	1 - C 6
N236-14-635A	1400BA-1	1 - E 6
N236-14-639B	1400B -2	1 - D 6
N236-14-639B	1400BA-2	1 - F 6
N318-14-651	1400BA-1	1 - E 6
N326-14-651	1400B -1	1 - C 6
N236-14-652A	1400B -1	1 - C 6
N236-14-652A	1400BA-1	1 - E 6
N236-14-653	1400B -1	1 - C 6
N236-14-653	1400BA-1	1 - E 6
N318-14-660B	1400BA-1	1 - E 6
N326-14-660A	1400B -1	1 - C 6
N304-14-667C	1400B -1	1 - C 6
N318-14-667	1400BA-1	1 - E 6
N304-14-668E	1400B -1	1 - C 6
N318-14-668A	1400BA-2	1 - F 6
N318-14-670B	1400BA-1	1 - E 6
N326-14-670A	1400B -1	1 - C 6
N318-14-680B	1400BA-1	1 - E 6
N326-14-680A	1400B -1	1 - C 6
N318-14-690A	1400BA-2	1 - F 6
N326-14-690A	1400B -1	1 - C 6
N326-14-700A	1500B -1	1 - G 6
N326-14-700A	1500BA-1	1 - I 6
N326-14-710B	1500B -1	1 - G 6
N326-14-710B	1500BA-1	1 - I 6
N326-14-717B	1500B -1	1 - G 6
N326-14-717B	1500BA-1	1 - I 6
N326-14-720B	1500B -1	1 - G 6
N326-14-720B	1500BA-1	1 - I 6
N326-14-736	1500B -1	1 - G 6
N326-14-736	1500BA-1	1 - I 6
N326-14-737	1500B -1	1 - G 6
N326-14-737	1500BA-1	1 - I 6
N326-14-760B	1500B -1	1 - G 6
N326-14-760B	1500BA-1	1 - I 6
8871-14-810	1500B -1	1 - G 6
8871-14-810	1500BA-1	1 - I 6
N201-14-820	6600B -2	2 - H15
N201-14-820	6600BA-2	2 - K15
1757-14-821	1500B -1	1 - G 6
1757-14-821	1500BA-1	1 - I 6
1757-14-822	1500B -1	1 - G 6
1757-14-822	1500BA-1	1 - I 6
1757-14-823	1500B -1	1 - G 6
8AF2-15-010	1500B -1	1 - G 6
8AF2-15-010	1500B -1	1 - G 6
8AF2-15-010A	1500B -1	1 - G 6
8AF3-15-010	1500B -1	1 - G 6
8AF3-15-010A	1500B -1	1 - G 6
8AF4-15-010	1500BA-1	1 - I 6
8AF4-15-010	1500BA-1	1 - I 6
8AF4-15-010A	1500BA-1	1 - I 6
8AF3-15-010	1500B -1	1 - G 6
9970-15-030	5125 -1	2 - F 4
N326-15-035A	1500B -1	1 - G 6
N326-15-035A	1500BA-1	1 - I 6
8AF1-15-100A	1500B -1	1 - G 6
8AF1-15-100A	1500BA-1	1 - I 6
N304-15-103	1371B -1	1 - E 5
N304-15-103	1500B -1	1 - G 6
1757-15-106	1500B -1	1 - G 6
1757-15-106	1500BA-1	1 - I 6
N326-15-116	1500BA-1	1 - I 6
N326-15-116A	1500B -1	1 - G 6
N326-15-117A	1500B -1	1 - G 6
N326-15-117A	1500BA-1	1 - I 6
B630-15-120	1500B -1	1 - G 6
B630-15-120	1500BA-1	1 - I 6
N304-15-125	1500B -1	1 - G 6
N304-15-125	1500BA-1	1 - I 6
N326-15-131A	1500B -1	1 - G 6
N326-15-131A	1500BA-1	1 - I 6
N326-15-140	1500B -2	1 - H 6
N326-15-140	1500BA-2	1 - J 6
N326-15-141	1500B -1	1 - G 6
N326-15-141	1500BA-1	1 - I 6
N326-15-142	1500B -1	1 - G 6
N326-15-142	1500BA-1	1 - I 6
N326-15-150	1500B -2	1 - H 6
N326-15-150	1500BA-2	1 - J 6
N326-15-151	1500B -1	1 - G 6
N326-15-151	1500BA-1	1 - I 6
N326-15-153	1500B -2	1 - H 6
N326-15-153	1500BA-2	1 - J 6
N326-15-154	1500B -2	1 - H 6
N326-15-154	1500BA-2	1 - J 6
N326-15-156	1500B -2	1 - H 6
N326-15-156	1500BA-2	1 - J 6
N326-15-15X	1500B -2	1 - H 6
N326-15-15X	1500BA-2	1 - J 6
N326-15-162	1500B -1	1 - G 6
N326-15-162	1500BA-1	1 - I 6
N326-15-168	1500B -1	1 - G 6
N326-15-168	1500BA-1	1 - I 5
8AF1-15-171	1500B -1	1 - G 6
8AF1-15-171	1500BA-1	1 - I 6
N318-15-172A	1500B -1	1 - G 6
N318-15-172A	1500BA-1	1 - I 6
N326-15-172B	1500B -1	1 - G 6
1757-15-173	1500B -1	1 - G 6
1757-15-173	1500BA-1	1 - I 6
N326-15-174	1500B -1	1 - G 6
N326-15-174	1500BA-1	1 - I 6
N326-15-175A	1500B -1	1 - G 6
N326-15-175A	1500BA-1	1 - I 6
N323-15-17Y	1500B -1	1 - G 6
N323-15-17Y	1500BA-1	1 - I 6
N326-15-17YA	1500B -1	1 - G 6
N326-15-17YA	1500BA-1	1 - I 6
N326-15-182	1500B -1	1 - G 6
N326-15-182	1500BA-1	1 - I 6
N326-15-185A	1500B -2	1 - H 6
N326-15-185A	1500BA-1	1 - I 6
N326-15-186A	1500B -2	1 - H 6
N326-15-186A	1500BA-1	1 - I 6
N326-15-200C	1500B -2	1 - H 6
N326-15-200C	1500BA-1	1 - I 6
N326-15-200D	1500B -2	1 - H 6
N326-15-200D	1500BA-1	1 - I 6
N327-15-200C	1500B -2	1 - H 6
N327-15-200D	1500B -2	1 - H 6
N326-15-202	1500B -2	1 - H 6
N326-15-202	1500BA-2	1 - J 6
N326-15-203	1500B -2	1 - H 6
N326-15-203	1500BA-2	1 - J 6
D316-15-205	1500B -2	1 - H 6
D316-15-205	1500BA-2	1 - J 6
N321-15-205	1500B -2	1 - H 6
N321-15-205	1500BA-2	1 - J 6
N323-15-205	1500B -2	1 - H 6
N323-15-205	1500BA-2	1 - J 6
N326-15-211B	1500B -2	1 - H 6
N326-15-211B	1500BA-2	1 - J 6
N326-15-228	1500B -2	1 - H 6
N326-15-228	1500BA-2	1 - J 6
N326-15-350A	1500B -2	1 - H 6
N332-15-350B	1500B -2	1 - H 6

PART NUMBER INDEX

PART NUMBER	SECTION	LOCATION
N332-15-350B	1500BA-2	1 - J 6
N326-15-355A	1500B -2	1 - H 6
N332-15 355	1500B -2	1 - H 6
N332-15-355	1500BA-2	1 - J 6
N332-15-370B	1500B -2	1 - H 6
N332-15-370B	1500BA-2	1 - J 6
N326-15-381A	1500B -2	1 - H 6
N332-15-381A	1500B -2	1 - H 6
N332-15-381A	1500BA-2	1 - J 6
N332-15-381B	1500B -2	1 - H 6
N332-15-381B	1500BA-2	1 - J 6
N332-15-382	1500B -2	1 - H 6
N332-15-382	1500BA-2	1 - J 6
N327-15-388	1500B -2	1 - H 6
N327-15-388	1500BA-2	1 - J 6
N326-15-421	1500B -2	1 - H 6
N326-15-421	1500BA-2	1 - J 6
N326-15-441	1500B -2	1 - H 6
N326-15-441	1500BA-2	1 - J 6
8553-15-610B	6600B -2	2 - H15
8553-15-610B	6600BA-2	2 - K15
N326-15-610	6600B -2	2 - H15
N326-15-610	6600BA-2	2 - K15
8553-15-611	6600B -2	2 - H15
8553-15-611	6600BA-2	2 - K15
N327-15-811	1580B -1	1 - K 6
N326-15-812	1580B -1	1 - K 6
N326-15-908	1580B -1	1 - K 6
N326-15-909	1580B -1	1 - K 6
N326-15-910A	1580B -1	1 - K 6
N327-15-910A	1580B -1	1 - K 6
N249-15-932A	1580B -1	1 - K 6
N326-15-932	1580B -1	1 - K 6
N249-15-933	1580B -1	1 - K 6
N326-15-933	1580B -1	1 - K 6
N326-15-934	1580B -1	1 - K 6
N249-15-940	1580B -1	1 - K 6
R230-15-940	1580B -1	1 - K 6
N249-15-942	1580B -1	1 - K 6
N326-15-966	1580B -1	1 - K 6
N327-15-966	1580B -1	1 - K 6
N328-15-966	1580B -1	1 - K 6
N326-15-V02	1500B -2	1 - H 6
N326-15-V02	1500BA-2	1 - J 6
N326-15-V03	1500B -2	1 - H 6
N326-15-V03	1500BA-2	1 - J 6
N326-15-V12	1500B -2	1 - H 6
N326-15-V12	1500BA-2	1 - J 6
0603-16-102B	1600 -1	1 - L 6
N302-16-102	1600A -1	1 - M 6
0603-16-103	1600 -1	1 - L 6
0603-16-103	1600A -1	1 - M 6
N302-16-118A	1600A -1	1 - M 6
N302-16-140	1600A -1	1 - M 6
N204-16-145	1600 -1	1 - L 6
N302-16-150B	1600 -1	1 - L 6
N302-16-150B	1600A -1	1 - M 6
N302-16-210B	1600A -1	1 - M 6
3975-16-214A	1600 -1	1 - L 6
N302-16-214	1600A -1	1 - M 6
N204-16-220A	1600 -1	1 - L 6
N302-16-221	1600A -1	1 - M 6
8540-16-225	1600 -1	1 - L 6
1416-16-232A	1600 -1	1 - L 6
1416-16-232A	1600A -1	1 - M 6
8540-16-241A	1600 -1	1 - L 6
9965-16-405	3700 -1	1 - E14
JE01-16-410B	1600A -1	1 - M 6
N206-16-410	1600 -1	1 - L 6
N304-16-410	1600 -1	1 - L 6
0839-16-432	1600 -1	1 - L 6
N303-16-460	1600 -1	1 - L 6
N307-16-460	1600A -1	1 - M 6
F853-16-510	1600A -1	1 - M 6
H606-16-510A	1600 -1	1 - L 6
N204-16-520	1600 -1	1 - L 6
N302-16-520	1600A -1	1 - M 6
M511-17-1008	1700 -1	1 - N 6
M511-17-100C	1700 -1	1 - N 6
0107-17-121	1700A -1	1 - C 7
0810-17-121	1700 -1	1 - N 6
0810-17-121	1700A -1	1 - C 7
0810-17-121	2710 -1	1 - H11
0810-17-121	2710A -1	1 - J11
0810-17 121	2710C -1	1 - L11
B501-17-121	1700A -1	1 - C 7
8086-17-140A	1710 -2	1 - E 7
R503-17-200E	1700A -1	1 - C 7
M515-17-201A	1710 -1	1 - D 7
R502-17-203A	1710A -1	1 - G 7
R504-17-203	1710A -1	1 - G 7
M503-17-204	1710 -1	1 - D 7
M503-17-204	1710 -1	1 - D 7
R421-17-204	1710A -1	1 - G 7
M501-17-210	1710 -1	1 - D 7
R501-17-21XA	1710A -1	1 - G 7
M505-17-221A	1710 -1	1 - D 7
R503-17-221B	1710A -1	1 - G 7
0317-17-225	1710 -1	1 - D 7
0317-17-225	1710A -1	1 - G 7
M510-17-231A	1710 -1	1 - D 7
R502-17-231B	1710A -1	1 - G 7
R501-17-241	1710A -1	1 - G 7
F401-17-242A	1710 -1	1 - D 7
F401-17-242A	1710A -1	1 - G 7
R501-17-242	1710A -1	1 - G 7
F401-17-243A	1710 -1	1 - D 7
F401-17-243A	1710A -1	1 - G 7
R502-17-250A	1710A -1	1 - G 7
M508-17-251	1710 -1	1 - D 7
M502-17-261	1710 -1	1 - D 7
M508-17-261A	1710 -1	1 - D 7
M510-17-261	1710 -2	1 - E 7
R501-17-261	1710A -1	1 - G 7
M503-17-262	1710 -1	1 - D 7
R501-17-262	1710A -1	1 - G 7
W501-17-263A	1710A -1	1 - G 7
F401-17-264A	1710 -1	1 - D 7
F401-17-264A	1710A -1	1 - G 7
F401-17-264A	1710A -2	1 - H 7
G401-17-264	1710 -1	1 - D 7
G402-17-264	1710A -1	1 - G 7
R501-17-264	1710A -1	1 - G 7
M502-17-265A	1710 -1	1 - D 7
M502-17-265A	1710A -1	1 - G 7
R502-17-265A	1710A -1	1 - G 7
R503-17-265A	1710A -1	1 - G 7
R502-17-270A	1710A -1	1 - G 7
M510-17-271	1710 -1	1 - D 7
0259-17-274A	1710 -1	1 - D 7
0884-17-274	1710A -1	1 - G 7
0884-17-275B	1710A -1	1 - G 7
3648-17-275A	1710A -1	1 - G 7
8540-17-275A	1710 -1	1 - D 7
0259-17-276	1710 -1	1 - D 7
0839-17-276	1710A -1	1 - G 7
0259-17-277	1710 -1	1 - D 7
0839-17-277	1710A -1	1 - G 7
0259-17-278	1710 -1	1 - D 7
0839-17-278	1710A -1	1 - G 7
0259-17-279	1710 -1	1 - D 7
M501-17-281B	1710 -1	1 - D 7
R501-17-281A	1710A -1	1 - G 7
R502-17-281A	1710A -1	1 - G 7
4069-17-283A	1710 -1	1 - D 7
H505-17-283A	1710A -1	1 - G 7
4069-17-284E	1710 -1	1 - D 7
0839-17-287	1710A -1	1 - G 7
0839-17-288	1710A -1	1 - G 7
M502-17-295C	1710 -1	1 - D 7
R421-17-295	1710A -1	1 - G 7
M502-17-297A	1710 -1	1 - D 7
M502-17-298A	1710 -1	1 - D 7
M502-17-299A	1710 -2	1 - E 7
R521-17-299	1710A -2	1 - H 7
M519-17-300B	1710 -1	1 - D 7
R506-17-300G	1710A -1	1 - G 7
0821-17-302A	1710A -2	1 - H 7
8086-17-302C	1710 -1	1 - D 7
M502-17-302B	1710 -2	1 - E 7
M503-17-302B	1710 -2	1 - E 7
R501-17-302	1710A -2	1 - H 7
0821-17-303	1710A -2	1 - H 7
M501-17-303	1710 -2	1 - E 7
M502-17-303	1710A -2	1 - H 7
M501-17-304B	1710 -2	1 - E 7
M501-17-304B	1710A -2	1 - H 7
M504-17-304	1710 -2	1 - E 7
R501-17-304	1710A -2	1 - H 7
R502-17-304B	1710A -2	1 - H 7
R505-17-304	1710A -2	1 - H 7
0839-17-305B	1710 -2	1 - E 7
0839-17-305B	1710A -2	1 - H 7
0727-17-306	1710A -2	1 - H 7
R502-17-306	1710 -1	1 - D 7
R502-17-306	1710 -1	1 - D 7
R502-17-306	1710A -1	1 - G 7
R502-17-306A	1710 -1	1 - D 7
R502-17-306A	1710 -1	1 - D 7
R502-17-306A	1710A -1	1 - G 7
M504-17-308	1710 -2	1 - E 7
M507-17-308	1710 -2	1 - E 7
R503-17-308A	1710A -2	1 - H 7
R505-17-308	1710A -2	1 - H 7
M501-17-309	1710 -2	1 - E 7
M501-17-309	1710A -2	1 - H 7
3648-17-310	1710A -2	1 - H 7
M504-17-310C	1710 -2	1 - E 7
R502-17-310	1710A -2	1 - H 7
0821-17-313	1710A -2	1 - H 7
4069-17-313	1710 -2	1 - E 7
4077-17-314A	1710 -2	1 - E 7
0884-17-315	1710A -2	1 - H 7
4077-17-315A	1710 -2	1 - E 7
4077-17-316	1710 -2	1 - E 7
R501-17-316A	1710A -2	1 - H 7
4069-17-323	1710A -2	1 - H 7
0884-17-325B	1700A -1	1 - C 7
8086-17-326	1700 -1	1 - N 6
0305-17-327	1710 -2	1 - E 7
0305-17-327	1710A -2	1 - H 7
0305-17-328	1710 -2	1 - E 7
0305-17-328	1710A -2	1 - H 7
M517-17-330A	1700 -1	1 - N 6
R503-17-330C	1700A -1	1 - C 7
0437-17-335A	1700 -1	1 - N 6
M502-17-335A	1700A -1	1 - C 7
M502-17-335A	1920 -1	1 - L 8
R401-17-337A	1600A -1	1 - M 6
R501-17-337A	1700A -1	1 - C 7
R504-17-337	1700A -1	1 - C 7
R501-17-338A	1700A -1	1 - C 7
1281-17-341	1710 -2	1 - E 7
R501-17-341	1710A -2	1 - H 7
R501-17-341	1940 -1	1 - H 9
M501-17-342	1710A -2	1 - H 7
M501-17-342	1940 -1	1 - H 9
0114-17-351	1720 -1	1 - J 7
0114-17-351	1720A -1	1 - K 7
0862-17-371	1700A -1	1 - C 7
R501-17-371A	1700A -1	1 - C 7
R501-17-373	1700A -1	1 - C 7
R501-17-375	1700A -1	1 - C 7
0810-17-381A	1700A -1	1 - C 7
1281-17-383	1700A -1	1 - C 7
0810-17-385	1700A -1	1 - C 7
M502-17-402A	1720 -1	1 - J 7
R501-17-402A	1720A -1	1 - K 7
M501-17-404B	1720 -1	1 - J 7
R501-17-404A	1720A -1	1 - K 7
R501-17-404B	1720A -1	1 - K 7
M504-17-406A	1720 -1	1 - J 7
R503-17-406A	1720A -1	1 - K 7
R504-17-406A	1720A -1	1 - K 7
0014-17-411	1720 -1	1 - J 7
0103-17-411	1720 -1	1 - J 7
0103-17-411	1720A -1	1 - K 7
M502-17-411A	1720 -1	1 - J 7
R502-17-411B	1720A -1	1 - K 7
M501-17-412	1720 -1	1 - J 7
R502-17-412	1720A -1	1 - K 7
M503-17-421	1720 -1	1 - J 7
R502-17-421B	1720A -1	1 - K 7
M501-17-422	1720 -1	1 - J 7
R502-17-422	1720A -1	1 - K 7
M505-17-431A	1720 -1	1 - J 7
R503-17-431A	1720A -1	1 - K 7
R506-17-431	1720A -1	1 - K 7
M501-17-432	1720 -1	1 - J 7
R502-17-432	1720A -1	1 - K 7
0221-17-441	1720A -1	1 - K 7
0862-17-441A	1700 -1	1 - N 6
0862-17-441A	1920 -1	1 - L 8
1669-17-441A	1700 -1	1 - N 6
1669-17-441A	1700A -1	1 - C 7
1669-17-442B	1700 -1	1 - N 6
1669-17-442B	1700A -1	1 - C 7
1669-17-442B	1920 -1	1 - L 8
1011-17-443	1700 -1	1 - N 6
1011-17-443	1700A -1	1 - C 7
1011-17-443	1920 -1	1 - L 8
M512-17-450	1720 -1	1 - J 7
R503-17-450	1720A -1	1 - K 7
M505-17-461A	1720 -1	1 - J 7
M505-17-461A	1720A -1	1 - K 7
M501-17-465A	1720A -1	1 - K 7
M501-17-465B	1720 -1	1 - J 7
M508-17-470D	1720 -1	1 - J 7
M508-17-470D	1720A -1	1 - K 7
M501-17-474	1720 -1	1 - J 7
M501-17-474	1720A -1	1 - K 7
M501-17-475	1720 -1	1 - J 7
M501-17-475	1720A -1	1 - K 7
M502-17-476A	1720 -1	1 - J 7
M502-17-476A	1720A -1	1 - K 7

PART NUMBER INDEX

PART NUMBER	SECTION	LOCATION
M501-17-477	1720 -1	1 - J 7
M501-17-477	1720A -1	1 - K 7
M509-17-480A	1720 -1	1 - J 7
M509-17-480A	1720A -1	1 - K 7
M508-17-481A	1720 -1	1 - J 7
M508-17-481A	1720A -1	1 - K 7
8599-17-482	1720 -1	1 - J 7
8599-17-482	1720A -1	1 - K 7
M505-17-482	1720 -1	1 - J 7
M505-17-482	1720A -1	1 - K 7
0824-17-483	1720 -1	1 - J 7
0824-17-483	1720A -1	1 - K 7
M501-17-486A	1720 -1	1 - J 7
M501-17-486A	1720A -1	1 - K 7
M501-17-490B	1720A -1	1 - K 7
M502-17-490A	1720 -1	1 - J 7
0183-17-491	1720 -1	1 - J 7
0183-17-491	1720A -1	1 - K 7
M515-17-510A	1720 -1	1 - J 7
M515-17-510A	1720A -1	1 - K 7
M507-17-520	1720 -1	1 - J 7
M507-17-520	1720A -1	1 - K 7
M507-17-520 00	1720 -1	1 - J 7
M507-17-520 00	1720A -1	1 - K 7
M503-17-524A	1720 -1	1 - J 7
M503-17-524A	1720A -1	1 - K 7
0884-17-530	1700 -1	1 - N 6
0884-17-530	1700A -1	1 - C 7
8086-17-540A	1700 -1	1 - N 6
R502-17-540B	1700A -1	1 - C 7
M501-17-543A	1700 -1	1 - N 6
M501-17-543A	1700A -1	1 - C 7
1281-17-550	1700A -1	1 - C 7
M501-17-550A	1700 -1	1 - N 6
R505-17-610B	1710A -2	1 - H 7
M509-17-611	1710 -2	1 - E 7
M512-17-611	1710 -2	1 - E 7
R503-17-611	1710A -2	1 - H 7
R501-17-612	1710A -2	1 - H 7
R501-17-613	1710A -2	1 - H 7
R501-17-621	1710A -2	1 - H 7
R502-17-621A	1710A -2	1 - H 7
R501-17-622	1710A -2	1 - H 7
3648-17-626	1710 -2	1 - E 7
3648-17-626	1710A -2	1 - H 7
3648-17-629	1710A -2	1 - H 7
8601-17-629	1710 -2	1 - E 7
R501-17-631A	1710A -2	1 - H 7
0884-17-632B	1710 -2	1 - E 7
R501-17-632A	1710A -2	1 - H 7
0884-17-633B	1710 -2	1 - E 7
R501-17-633A	1710A -3	1 - I 7
0884-17 634B	1710 -2	1 - E 7
R501-17-634A	1710A -3	1 - I 7
0884-17-635B	1710 -2	1 - E 7
R501-17-635	1710A -2	1 - H 7
R501-17-636	1710A -2	1 - H 7
1281-17-640	6600BA-2	2 - K15
8130-17-640C	6600B -2	2 - H15
M502-17-640A	6600B -2	2 - H15
M502-17-640C	6600BA-2	2 - K15
0821-17-641B	1710A -3	1 - I 7
M501-17-651	1710 -2	1 - E 7
M502-17-651	1710A -3	1 - I 7
M501-17-652	1710 -2	1 - E 7
M502-17-652	1710A -3	1 - I 7
M501-17-653	1710 -2	1 - E 7
M502-17-653	1710A -3	1 - I 7
M501-17-654	1710 -2	1 - E 7
M502-17-654	1710A -3	1 - I 7
M501-17-655	1710 -2	1 - E 7
M502-17-655	1710A -3	1 - I 7
0862-17-660C	1700A -1	1 - C 7
W501-17-724	1710 -3	1 - F 7
W501-17-724	1710A -3	1 - I 7
V501-17-725	1710 -3	1 - F 7
V501-17-725	1710A -3	1 - I 7
W501-17-725A	1710 -3	1 - F 7
W501-17-725A	1710A -3	1 - I 7
W501-17-732A	1710 -3	1 - F 7
N326-18-051L	6701 -1	3 - J 3
N326-18-051L	6701A -1	3 - K 3
N326-18-051M	6701 -1	3 - J 3
N326-18-051M	6701A -1	3 - K 3
N326-18-051M	6701B -1	3 - L 3
N332-18-051K	6701 -1	3 - J 3
N332-18-051K	6701A -1	3 - K 3
N332-18-051L	6701 -1	3 - J 3
N332-18-051L	6701A -1	3 - K 3
N318 18-054	6701 -1	3 - J 3
N318-18-054	6701A -1	3 - K 3
N326-18-054	6701 -1	3 - J 3
N326-18-054	6701A -1	3 - K 3
N326-18-054	6701B -1	3 - L 3
N327-18-057D	6704 -2	3 - F 4
N326-18-0F0	6704 -2	3 - F 4
0000-18-100A	1800B -2	1 - M 7
0000-18-100A	1800BA-2	1 - D 8
N326-18-100A	1800B -2	1 - M 7
N326-18-100A	1800BA-2	1 - D 8
N326-18-100B	1800B -2	1 - M 7
N326-18-100B	1800BA-2	1 - D 8
N327-18-100	1800B -2	1 - M 7
N327-18-100	1800BA-2	1 - D 8
N338-18-100	1800B -2	1 - M 7
N338-18-100	1800BA-2	1 - D 8
N339-18-100	1800B -2	1 - M 7
N339-18-100	1800BA-2	1 - D 8
N326-18-105	1800B -2	1 - M 7
N326-18-105	1800BA-2	1 - D 8
N342-18-110	1800B -2	1 - M 7
N342-18-110	1800BA-2	1 - D 8
N343-18-110	1800B -2	1 - M 7
N343-18-110	1800BA-2	1 - D 8
N3X4-18-110	1800B -2	1 - M 7
N3X4-18-110	1800BA-2	1 - D 8
N326-18-115	1800B -2	1 - M 7
N326-18-115	1800BA-2	1 - D 8
N326-18-115A	1800B -2	1 - M 7
N326-18-115A	1800BA-2	1 - D 8
N318-18-141	1800BA-2	1 - D 8
N326-18-141	1800B -2	1 - M 7
N326-18-141	1800BA-2	1 - D 8
N327-18-141	1800B -3	1 - N 7
N318-18-144	1800BA-2	1 - D 8
N326-18-144	1800B -2	1 - M 7
N326 18-144	1800BA-2	1 - D 8
N319-18-14Y	6704 -2	3 - F 4
N326-18-151	1800B -2	1 - M 7
N318-18-160B	1800BA-2	1 - D 8
N326-18-160B	1800B -2	1 - M 7
N318-18-170B	1800BA-2	1 - D 8
N326-18-170B	1800B -2	1 - M 7
N318-18-180B	1800BA-2	1 - D 8
N326-18-180B	1800B -2	1 - M 7
N318-18-190B	1800BA-2	1 - D 8
N326-18-190B	1800B -2	1 - M 7
N318-18-211	6600BA-2	2 - K15
N320-18-211	6600B -2	2 - H15
N326-18-211	6600B -2	2 - H15
N326-18-211	6600BA-2	2 - K15
N327-18-211	6600B -2	2 - H15
N326-18-230	6600B -2	2 - H15
N326-18-230	6600BA-2	2 - K15
N326-18-237	6600B -2	2 - H15
N326-18-237	6600BA-2	2 - K15
N326-18-251	1800B -2	1 - M 7
N326-18-251	1800BA-2	1 - D 8
N326-18-251A	1800B -2	1 - M 7
N326-18-251A	1800BA-2	1 - D 8
N327-18-251	1800B -2	1 - M 7
N327-18-251	1800BA-2	1 - D 8
HE21-18-291	1380B -3	1 - I 5
N318-18-300R	1830BA-1	1 - G 8
N320-18-300R	1830B -1	1 - F 8
N245-18-311B	1800B -2	1 - M 7
N245-18-311B	1800BA-2	1 - D 8
N326-18-361	1800BA-2	1 - D 8
N326-18-361A	1800B -2	1 - M 7
8311-18-381A	1800BA-2	1 - D 8
8871-18-381	1800B -2	1 - M 7
N326-18-397	1800B -2	1 - M 7
N326-18-397	1800BA-2	1 - D 8
N318-18-400R	1840BA-1	1 - I 8
N326-18-400R	1840B -1	1 - H 8
N327-18-400R	1840B -1	1 - H 8
N327-18-401	1800B -2	1 - M 7
N327-18-401	1800BA-2	1 - D 8
N327-18-410	1800B -2	1 - M 7
N327-18-411	1800B -2	1 - M 7
8569-18-510A	6600B -2	2 - H15
8569-18-510A	6600BA-2	2 - K15
FE50-18-522	1850B -1	1 - J 8
N318-18-592A	1850B -1	1 - J 8
N318-18-593C	1850B -1	1 - J 8
N318-18-59XD	1850B -1	1 - J 8
E301-18-768	5260 -1	2 - L 4
N318-18-771A	6600BA-2	2 - K15
N327-18-780A	6600B -2	2 - H15
N326-18-811B	6600B -2	2 - H15
N326-18-811B	6600BA-2	2 - K15
N326-18-821A	6600B -2	2 - H15
N326-18-821A	6600BA-2	2 - K15
HE21-18-831	6600B -2	2 - H15
HE21-18-831	6600BA-2	2 - K15
N319-18-831	6600B -2	2 - H15
N319-18-831	6600BA-2	2 - K15
N319-18-835A	6600B -2	2 - H15
N320-18-835	6600B -2	2 - H15
N320-18-835	6600BA-2	2 - K15
N322-18-835A	6600B -2	2 - H15
N322-18-835A	6600BA-2	2 - K15
8574-18-840	6600B -2	2 - H15
8574-18-840	6600BA-2	2 - K15
E301-18-840A	6600B -2	2 - H15
F8B8-18-840A	6600BA-2	2 - K15
FE85-18-840	6600B -2	2 - H15
FE85-18-840	6600BA-2	2 - K15
N326-18-845	6600B -2	2 - H15
N326-18-845	6600BA-2	2 - K15
8341-18-861C	6704 -2	3 - F 4
N326-18-861	6600B -2	2 - H15
N326-18-861	6600BA-2	2 - K15
FE30-18-867A	1371BA-1	1 - F 5
N318-18-868	6600BA-2	2 - K15
N338-18-880R	6600B -2	2 - H15
N327-18-881R	6600B -2	2 - H15
N332-18-881R	6600BA-2	2 - K15
N333-18-881R	6600BA-2	2 - K15
N3Y6-18-881R	6600B -2	2 - H15
N326-18-883	6600B -2	2 - H15
N326-18-883	6600BA-2	2 - K15
HE21-18-885A	6600B -2	2 - H15
HE21-18-885A	6600BA-2	2 - K15
N326-18-885	6600B -2	2 - H15
N326-18-885	6600BA-2	2 - K15
N326-18-885A	6600B -2	2 - H15
N326-18-885A	6600BA-2	2 - K15
N326-18-890A	6600B -2	2 - H15
N326-18-890A	6600BA-2	2 - K15
N326-18-911A	1364B -1	1 - C 5
N326-18-911A	1364BA-1	1 - D 5
N304-18-912	1364B -1	1 - C 5
N304-18-912	1364BA-1	1 - D 5
N318-18-921	6600BA-2	2 - K15
N326-18-941	6600B -3	2 - I15
N326-18-941	6600BA-2	2 - K15
N326-18-945C	6600B -2	2 - H15
N326-18-945C	6600BA-2	2 - K15
1820-18-994	6704 -2	3 - F 4
N326-18-T11	1800B -3	1 - N 7
N326-18-T11	1800BA-3	1 - E 8
N327-18-T11	1800B -3	1 - N 7
N327-18-T11	1800BA-3	1 - E 8
N326-18-T12	1800B -3	1 - N 7
N326-18-T12	1800BA-3	1 - E 8
N326-18-T15	1800B -3	1 - N 7
N326-18-T15	1800BA-3	1 - E 8
E301-18-T41	6600B -3	2 - I15
E301-18 T41	6600BA-3	2 - L15
N326-18-V99	6600B -3	2 - I15
N326-18-V99	6600BA-3	2 - L15
FE38-18-W27	1830B -1	1 - F 8
FE38-18-W27	1830BA-1	1 - G 8
FEB1-18-W35A	1830B -1	1 - F 8
FEB1-18-W35A	1830BA-1	1 - G 8
B612-18-W36	1830B -1	1 - F 8
B612-18-W36	1830BA-1	1 - G 8
E5D3-18-W45	1830B -1	1 - F 8
E5D3-18-W45	1830BA-1	1 - G 8
N318-18-W50	1830BA-1	1 - G 8
N326-18-W50	1830B -1	1 - F 8
F811-18-W51A	1830B -1	1 - F 8
F811-18-W51A	1830BA-1	1 - G 8
E5D3-18-W60A	1830B -1	1 - F 8
E5D3-18-W60A	1830BA-1	1 - G 8
E356-18-W70	1830B -1	1 - F 8
E356-18-W70	1830BA-1	1 - G 8
N326-18-W80	1830B -1	1 - F 8
N326-18-W80	1830BA-1	1 - G 8
N318-18-X00	1840BA-1	1 - I 8
N326-18-X00	1840B -1	1 - H 8
N327-18-X00	1840B -1	1 - H 8
E356-18-X01	1840B -1	1 - H 8
E356-18-X01	1840BA-1	1 - I 8
N326-18-X05	1840B -1	1 - H 8
N326-18-X05	1840BA-1	1 - I 8
N326-18-X10	1840B -1	1 - H 8
N326-18-X10	1840BA-1	1 - I 8
N318-18-X20	1840B -1	1 - H 8
N318-18-X20	1840BA-1	1 - I 8
N326-18-X20	1840B -1	1 - H 8
N318-18-X25	1840B -1	1 - H 8
N318-18-X25	1840BA-1	1 - I 8
N326-18-X25	1840B -1	1 - H 8

PART NUMBER INDEX

PART NUMBER	SECTION	LOCATION
N326-18-X30	1840B -1	1 - H 8
N326-18-X30	1840BA-1	1 - I 8
N326-18-X40	1840B -1	1 - H 8
N326-18-X40	1840BA-1	1 - I 8
N326-18-X56	1840B -1	1 - H 8
N326-18-X56	1840BA-1	1 - I 8
N326-18-X57	1840B -1	1 - H 8
N326-18-X57	1840BA-1	1 - I 8
N326-18-X60	1840B -1	1 - H 8
N326-18-X60	1840BA-1	1 - I 8
N327-18-X60	1840B -1	1 - H 8
N326-18-X62	1840B -1	1 - H 8
N326-18-X62	1840BA-1	1 - I 8
N326-18-X65	1840B -1	1 - H 8
N326-18-X65	1840BA-1	1 - I 8
N327-18-X65	1840B -1	1 - H 8
N326-18-X66	1840B -1	1 - H 8
N326-18-X66	1840BA-1	1 - I 8
N327-18-X66	1840B -1	1 - H 8
N326-18-X70	1840B -1	1 - H 8
N326-18-X70	1840BA-1	1 - I 8
N327-18-X70	1840B -1	1 - H 8
N318-18-X71	1840B -1	1 - H 8
N316-18-X71	1840BA-1	1 - I 8
N326-18-X71	1840B -1	1 - H 8
N326-18-X71	1840BA-1	1 - I 8
N327-18-X71	1840B -1	1 - H 8
N326-18-X80	1840B -1	1 - H 8
N326-18-X80	1840BA-1	1 - I 8
N326-18-X87	1840B -1	1 - H 8
N326-18-X87	1840BA-1	1 - I 8
JE01-18-X91	1840B -1	1 - H 8
N326-18-X91	1840B -1	1 - H 8
N326-18-X91	1840BA-1	1 - I 8
N326-18-X92	1840B -1	1 - H 8
N326-18-X92	1840BA-1	1 - I 8
N326-18-X93	1840B -1	1 - H 8
N326-18-X93	1840BA-1	1 - I 8
E356-18-X95	1840B -1	1 - H 8
E356-18-X95	1840BA-1	1 - I 8
BU17-19-020B	1910 -1	1 - K 8
0842-19-025	1910 -1	1 - K 8
BU17-19-027	1910 -1	1 - K 8
BU17-19-031	1950 -1	1 - I 9
BU17-19-040A	1920 -1	1 - L 8
BU17-19-050	1910 -1	1 - K 8
3649-19-064A	1910 -1	1 - K 8
BU17-19-090F	1910 -1	1 - K 8
BU17-19-100	1910 -1	1 - K 8
BU17-19-211A	1910 -1	1 - K 8
BU01-19-215	1910 -1	1 - K 8
BU01-19-216	1910 -1	1 - K 8
BU18-19-220	1910 -1	1 - K 8
0338-19-223A	1910 -1	1 - K 8
BU18-19-240	1910 -1	1 - K 8
0338-19-245A	1910 -1	1 - K 8
0338-19-247	1920 -1	1 - L 8
0338-19-248	1910 -1	1 - K 8
0338-19-255	1910 -1	1 - K 8
BU01-19-256	1920 -1	1 - L 8
BU01-19-257	1920 -1	1 - L 8
0338-19-258	1910 -1	1 - K 8
0338-19-258	1920 -1	1 - L 8
BU05-19-310A	1920 -1	1 - L 8
0338-19-331A	1920 -1	1 - L 8
BU01-19-332A	1920 -1	1 - L 8
0338-19-336	1920 -1	1 - L 8
0338-19-337	1920 -1	1 - L 8
0338-19-338	1920 -1	1 - L 8
0397-19-340	1920 -1	1 - L 8
0338-19-341	1920 -1	1 - L 8
0338-19-360B	1930 -1	1 - E 9
0338-19-361B	1920 -1	1 - L 8
BU06-19-363	1920 -1	1 - L 8
BU10-19-363	1920 -1	1 - L 8
BU17-19-368	1920 -1	1 - L 8
BU17-19-381	1920 -1	1 - L 8
BU05-19-384	1920 -1	1 - L 8
BU17-19-385	1920 -1	1 - L 8
BU17-19-386	1920 -1	1 - L 8
0338-19-389	1920 -1	1 - L 8
BU17-19-391	1920 -1	1 - L 8
1758-19-392A	1920 -1	1 - L 8
1758-19-394A	1920 -1	1 - L 8
0338-19-395	1920 -1	1 - L 8
1758-19-397	1920 -1	1 - L 8
0338-19-398	1920 -1	1 - L 8
0338-19-398	1940 -1	1 - H 9
BU17-19-399	1920 -1	1 - L 8
BU17-19-3A0	1920 -1	1 - L 8
BU17-19-3A1	1920 -1	1 - L 8
BU17-19-3A2	1920 -1	1 - L 8
BU17-19-3A3	1920 -1	1 - L 8
BU17-19-3A4	1920 -1	1 - L 8
BU17-19-3A5	1920 -1	1 - L 8
BU17-19-3A6	1920 -1	1 - L 8
BU17-19-403	1920 -2	1 - M 8
BU17-19-404	1920 -2	1 - M 8
BU17-19-406	1920 -2	1 - M 8
0338-19-431	1950 -1	1 - I 9
0338-19-432	1950 -1	1 - I 9
0338-19-433A	1950 -1	1 - I 9
BU17-19-440	1950 -1	1 - I 9
0338-19-443	1950 -1	1 - I 9
BU17-19-444A	6600B -3	2 - I 15
0338-19-446	6600B -3	2 - I 15
0338-19-448	1950 -1	1 - I 9
0338-19-449	1950 -1	1 - I 9
BU17-19-450	1950 -1	1 - I 9
BU17-19-460	1930 -1	1 - E 9
0338-19-470	1930 -1	1 - E 9
0338-19-475	1930 -1	1 - E 9
0338-19-476	1930 -1	1 - E 9
0338-19-480	1930 -1	1 - E 9
0338-19-486	1930 -1	1 - E 9
0338-19-487	1930 -1	1 - E 9
0338-19-488	1930 -1	1 - E 9
0338-19-498	1930 -1	1 - E 9
BU17-19-498	1930 -1	1 - E 9
FT01-19-499	1930 -1	1 - E 9
BU17-19-500	1930 -1	1 - E 9
3959-19-503	1930 -1	1 - E 9
3959-19-504	1930 -1	1 - E 9
3959-19-505	1930 -1	1 - E 9
3959-19-506	1930 -1	1 - E 9
3959-19-507	1930 -1	1 - E 9
3959-19-508	1930 -1	1 - E 9
0338-19-509	1930 -1	1 - E 9
3959-19-509	1930 -1	1 - E 9
BU17-19-510	1930 -1	1 - E 9
1758-19-511	1930 -1	1 - E 9
0338-19-530	1930 -2	1 - F 9
0338-19-531	1930 -2	1 - F 9
0338-19-533	1930 -2	1 - F 9
0338-19-533A	1940 -1	1 - H 9
BU03-19-533	1930 -2	1 - F 9
0338-19-534	1930 -2	1 - F 9
0338-19-534	1940 -1	1 - H 9
BU03-19-534	1930 -2	1 - F 9
BU02-19-540	1930 -2	1 - F 9
BU02-19-560	1930 -2	1 - F 9
BU02-19-565	1930 -2	1 - F 9
FT01-19-566	1930 -2	1 - F 9
BU02-19-567	1930 -2	1 - F 9
BU02-19-570	1930 -2	1 - F 9
0338-19-580	1940 -1	1 - H 9
0338-19-581	1940 -1	1 - H 9
0338-19-590	1940 -1	1 - H 9
0338-19-591	1940 -1	1 - H 9
0338-19-593	1940 -1	1 - H 9
0338-19-594	1940 -1	1 - H 9
0338-19-595	1940 -1	1 - H 9
0338-19-596	1940 -1	1 - H 9
0338-19-598	1930 -2	1 - F 9
BT08-19-600	1940 -1	1 - H 9
0338-19-603	1940 -1	1 - H 9
0338-19-604	1940 -1	1 - H 9
0338-19-606	1940 -1	1 - H 9
0338-19-607	1940 -1	1 - H 9
0338 19-608	1940 -1	1 - H 9
0338-19-609	1940 -1	1 - H 9
BU17-19-610	1940 -1	1 - H 9
1758-19-613	1940 -1	1 - H 9
1758-19-614	1940 -1	1 - H 9
1758-19-615	1940 -1	1 - H 9
1758-19-616	1940 -1	1 - H 9
1758-19-617	1940 -1	1 - H 9
1758-19-618	1940 -1	1 - H 9
0338-19-619	1940 -1	1 - H 9
0338-19-621	1930 -2	1 - F 9
0338-19-622	1930 -2	1 - F 9
0338-19-622	1940 -1	1 - H 9
0338-19-623	1930 -2	1 - F 9
0338-19-624	1930 -2	1 - F 9
0338-19-631	1930 -2	1 - F 9
0338-19-632	1930 -2	1 - F 9
0338-19-633	1930 -2	1 - F 9
0338-19-634	1930 -2	1 - F 9
0338-19-635	1930 -2	1 - F 9
0338-19-636	1930 -2	1 - F 9
0338-19-639	1930 -2	1 - F 9
0338-19-641	1930 -2	1 - F 9
0338-19-642	1930 -2	1 - F 9
0338-19-643	1930 -2	1 - F 9
0338-19-644	1930 -2	1 - F 9
0338-19-645	1930 -2	1 - F 9
0338-19-646	1930 -2	1 - F 9
0338-19-647	1930 -2	1 - F 9
0338-19-648	1930 -2	1 - F 9
BU02-19-650A	1940 -1	1 - H 9
0338-19-655	1940 -1	1 - H 9
0436-19-656	1930 -2	1 - F 9
0436-19-656	1940 -1	1 - H 9
BU02-19 660	1940 -1	1 - H 9
0338-19-663	1940 -1	1 - H 9
0338-19-664	1940 -1	1 - H 9
BU02-19-665	1940 -1	1 - H 9
0338-19-666	1940 -1	1 - H 9
0338-19-667	1940 -1	1 - H 9
BU17-19-670	1940 -1	1 - H 9
0338-19-676	1940 -1	1 - H 9
BU17-19-701	1950 -1	1 - I 9
0338-19-702A	1950 -1	1 - I 9
BU17-19-703	1950 -1	1 - I 9
BU17-19-704	1950 -1	1 - I 9
0338-19-706	1950 -1	1 - I 9
BU17-19-710	1920 -2	1 - M 8
0338-19-731	1950 -1	1 - I 9
BU17-19-732	1950 -1	1 - I 9
0338-19-733C	1950 -1	1 - I 9
0338-19-734A	1950 -1	1 - I 9
0338-19-735	1920 -2	1 - M 8
0338-19-737	1920 -2	1 - M 8
0338-19-739	1920 -2	1 - M 8
BU17-19-750C	1920 -2	1 - M 8
BU17-19-750C	1925 -1	1 - C 9
BU17-19-760A	1925 -1	1 - C 9
0338-19-765	1925 -1	1 - C 9
0338-19-768	1920 -2	1 - M 8
0338-19-768	1925 -1	1 - C 9
BU01-19-771	1925 -1	1 - C 9
0338-19-772	1925 -1	1 - C 9
0338-19-773	1925 -1	1 - C 9
0397-19-774	1925 -1	1 - C 9
0397-19-775	1925 -1	1 - C 9
0338-19-777	1925 -1	1 - C 9
0338-19-778	1925 -1	1 - C 9
1758-19-781	1925 -1	1 - C 9
0338-19-782	1925 -1	1 - C 9
0338-19-785	1925 -1	1 - C 9
1758-19-786	1925 -1	1 - C 9
0338-19-787	1925 -1	1 - C 9
BU17-19-788	1925 -1	1 - C 9
BU17-19-789	1925 -1	1 - C 9
0338-19-791A	1925 -1	1 - C 9
0338-19-793A	1925 -1	1 - C 9
0338-19-795B	1925 -1	1 - C 9
0338-19-797	1925 -1	1 - C 9
BU02-19-798	1925 -1	1 - C 9
0338-19-801	1925 -1	1 - C 9
0338-19-802	1925 -1	1 - C 9
BU01-19-803A	1925 -1	1 - C 9
BU17-19-805	1925 -1	1 - C 9
0338-19-807A	1925 -1	1 - C 9
BU01-19-807	1925 -1	1 - C 9
BU17-19-807	1925 -1	1 - C 9
0338-19-808	1925 -1	1 - C 9
BU10-19-811	1925 -1	1 - C 9
0338-19-814	1925 -1	1 - C 9
BU01-19-815	1920 -2	1 - M 8
BU01-19-815	1925 -1	1 - C 9
0338-19-816	1925 -1	1 - C 9
0338-19-817	1925 -1	1 - C 9
0338-19-818	1925 -1	1 - C 9
0338-19-819	1925 -1	1 - C 9
BU17-19-821	6600B -3	2 - I 15
0338-19-822	1920 -2	1 - M 8
BU17-19-823	1920 -2	1 - M 8
0338-19-825	1920 -2	1 - M 8
0338-19-826	1920 -2	1 - M 8
0338-19-827	1920 -2	1 - M 8
0338-19-828	1920 -2	1 - M 8
0338-19-829	1920 -2	1 - M 8
BU17-19-830	1920 -2	1 - M 8
0338-19-831	1920 -2	1 - M 8
0338-19-832	1920 -2	1 - M 8
0338-19-833	1920 -2	1 - M 8
0338-19-835B	1920 -2	1 - M 8
0338-19-837	1920 -2	1 - M 8
BU17-19-838	1950 -1	1 - I 9
BU17-19-870A	1920 -2	1 - M 8
BU17-19-880B	1920 -2	1 - M 8
BU17-19-890B	1920 -2	1 - M 8
0338-19-904A	1910 -1	1 - K 8
BU17-19-910	1910 -1	1 - K 8

PART NUMBER INDEX

PART NUMBER	SECTION	LOCATION
BU17-19-917	1910 -1	1 - K 8
BU17-19-920B	1910 -1	1 - K 8
BU17-19-930B	1910 -1	1 - K 8
BV09-19-933A	1910 -1	1 - K 8
BU17-19-940	1910 -1	1 - K 8
BU01-19-941	1910 -1	1 - K 8
BU17-19-961A	1910 -1	1 - K 8
BV09-19-980A	1910 -1	1 - K 8
N332-20-130	1364BA-1	1 - D 5
HE21-20-190	1364BA-1	1 - D 5
N326-20-200A	1330B -1	1 - K 4
N326-20-200A	1330BA-1	1 - L 4
N326-20-210A	1330B -1	1 - K 4
N326-20-210A	1330BA-1	1 - L 4
N326-20-220B	1330B -1	1 - K 4
N326-20-220B	1330BA-1	1 - L 4
FEG7 20-250	1330BA-1	1 - L 4
N326-20-300A	1380B -3	1 - I 5
N332-20-300	1380BA-3	1 - M 5
N326-20-305	1380B -3	1 - I 5
N332-20-305A	1380BA-3	1 - M 5
8574-20-309	1364B -1	1 - C 5
HE01-20-309	1364B -1	1 - C 5
N318-20-341A	1380BA-3	1 - M 5
N326-20-341	1380B -3	1 - I 5
N318-20-342	1380BA-3	1 - M 5
N326-20-342	1380B -3	1 - I 5
N332-20-342A	1380BA-3	1 - M 5
N318-20-343	1380BA-3	1 - M 5
N318-20-343A	1380BA-3	1 - M 5
N318-20-344	1380BA-4	1 - N 5
N327-20-381	1380B -3	1 - I 5
N326-20-410D	1380B -3	1 - I 5
N332-20-410B	1380BA-3	1 - M 5
N332-20-410C	1380BA-3	1 - M 5
N318-20-41XD	1380BA-4	1 - N 5
N332-20-41XB	1380BA-4	1 - N 5
N332-20-41YD	1310BA-3	1 - F 4
N326-20-490	1320B -1	1 - G 4
N326-20-490	1320BA-1	1 - I 4
N326-20-500A	4000B -1	1 - L14
N327-20-500	4000B -1	1 - L14
N332-20-500	4000BA-1	1 - C15
E508-20-523	1310BA-3	1 - F 4
E508-20-523	4000BA-1	1 - C15
N326-20-550	4000B -1	1 - L14
N326-20-600A	4000B -1	1 - L14
N332-20-600	4000BA-1	1 - C15
N326-20-660	1380B -4	1 - J 5
N332-20-660	1380BA-4	1 - N 5
N326-20-661	1380B -3	1 - I 5
N326-20-661	1380BA-3	1 - M 5
N318-20-662	1380BA-3	1 - M 5
N318-20-662A	1380BA-3	1 - M 5
N318-20-665C	1380BA-3	1 - M 5
N326-20-365A	1380B -3	1 - I 5
N318-20-666C	1380BA-3	1 - M 5
N326-20-666	1380B -3	1 - I 5
N250-20-725	1371B -1	1 - E 5
N250-20-725	1371BA-1	1 - F 5
N304-20-725	1371B -1	1 - E 5
N304-20-725	1371BA-1	1 - F 5
N326-20-750	4000B -1	1 - L14
N326-20-751	1330B -1	1 - K 4
N332-20-751B	1330BA-1	1 - L 4
N332-20-752B	1371BA-1	1 - F 5
N326-20-811	1320B -1	1 - G 4
N326-20-811	1320BA-1	1 - I 4
N318-20-820	1310BA-3	1 - F 4
N318-20-820	1380BA-4	1 - N 5
N332-20-820B	1380BA-4	1 - N 5
N326-20-840B	4000B -1	1 - L14
N332-20-840A	4000BA-1	1 - C15
N338-20-840	4000B -1	1 - L14
N332-20-850A	4000BA-1	1 - C15
1480-20-950A	1380B -4	1 - J 5
1480-20-950A	1380BA-4	1 - N 5
BU01-21-212	1920 -2	1 - M 8
BU10-21-250	1920 -2	1 - M 8
BU01-21-253	1920 -2	1 - M 8
BU01-21-266	1920 -2	1 - M 8
BU10-21-271	1920 -2	1 - M 8
BU01-21-272A	1920 -2	1 - M 8
BU01-21-273	1920 -2	1 - M 8
BU01-21-274	1920 -2	1 - M 8
BU10-21-275	1920 -2	1 - M 8
BU01-21-277	1920 -2	1 - M 8
BU17-21-291A	6600B -3	2 - I15
BU01-21-292	6600B -3	2 - I15
BU01-21-293A	6600B -3	2 - I15
BU01-21-294	6600B -3	2 - I15
BU01-21-295	6600B -3	2 - I15
BU17-21-296A	6600B -3	2 - I15
BU17-21-320A	1920 -2	1 - M 8
BU01-21-322	1920 -2	1 - M 8
BU01-21-386	1920 -2	1 - M 8
BU20-21-391	1920 -2	1 - M 8
BU01-21-395	1920 -2	1 - M 8
BU17-21-510	1930 -2	1 - F 9
BU05-21-520	1930 -2	1 - F 9
BU05-21-525	1930 -1	1 - E 9
BU05-21-526	1930 -1	1 - E 9
BU05-21-527	1930 -1	1 - E 9
BU05-21-528	1930 -1	1 - E 9
BU05-21-529	1930 -1	1 - E 9
BU03-21-531	1930 -2	1 - F 9
BU03-21-540	1930 -2	1 - F 9
BU03-21-560	1930 -2	1 - F 9
BU03-21-565	1930 -2	1 - F 9
BU03-21-567	1930 -3	1 - G 9
BU01-21-631	1930 -3	1 - G 9
BU01-21-632	1930 -3	1 - G 9
BU01-21-633	1930 -3	1 - G 9
BU01-21-634	1930 -3	1 - G 9
BU01-21-635	1930 -3	1 - G 9
BU01-21-636	1930 -3	1 - G 9
BU01-21-660A	1910 -1	1 - K 8
BU01-21-665	1910 -1	1 - K 8
BU17-21-666	1910 -1	1 - K 8
BU01-21-677	1910 -1	1 - K 8
BU01-21-678	1910 -1	1 - K 8
BU01-21-679	1930 -3	1 - G 9
BU01-21-681	1925 -1	1 - C 9
BU16-21-681	1925 -1	1 - C 9
BU05-21-682	1925 -1	1 - C 9
BU03-21-683A	1925 -2	1 - D 9
BU01-21-684	1925 -2	1 - D 9
BU16-21-684	1925 -2	1 - D 9
BU17-21-813	1925 -2	1 - D 9
BU17-21-815	1925 -2	1 - D 9
M030-22-510A	2550 -1	1 - D11
M040-22-510B	2550 -1	1 - D11
M030-22-520A	2550 -1	1 - D11
M040-22-520A	2550 -1	1 - D11
M030-22-530A	2550 -1	1 - D11
M040-22-530B	2550 -1	1 - D11
M030-22-540A	2550 -1	1 - D11
M040-22-540A	2550 -1	1 - D11
M030-22-550A	2550 -1	1 - D11
M040-22-550B	2550 -1	1 - D11
8735-23-180	1110BA-1	1 - L 3
8871-23-180	1110B -1	1 - K 3
N304-23-713	1371B -1	1 - E 5
N304-23-713	1371BA-1	1 - F 5
8173-24-521	1830B -1	1 - F 8
8173-24-521	1830BA-1	1 - G 8
FE65-24-522	1830B -1	1 - F 8
FE65-24-522	1830BA-1	1 - G 8
FE65-24-526	1830B -1	1 - F 8
FE65-24-526	1830BA-1	1 - G 8
N304-24-530A	1830B -1	1 - F 8
N304-24-530A	1830BA-1	1 - G 8
8028-24-533	1830B -1	1 - F 8
8028-24-533	1830BA-1	1 - G 8
FE65-24-535	1830B -1	1 - F 8
FE65-24-535	1830BA-1	1 - G 8
F811-24-550B	1830B -1	1 - F 8
F811-24-550B	1830BA-1	1 - G 8
M051-25-100C	2500 -1	1 - C11
M060-25-100C	2500 -1	1 - C11
P039-25-100A	2500 -1	1 - C11
P012-25-123	2500 -1	1 - C11
1368-25-124	2500 -1	1 - C11
1368-25-124	2500 -1	1 - C11
1368-25-124	2550 -1	1 - D11
1368-25-124	2830 -1	1 - F12
M030-25-500B	2550 -1	1 - D11
M030-25-500C	2550 -1	1 - D11
M040-25-500D	2550 -1	1 - D11
M055-25-901	2500 -1	1 - C11
M055-25-902	2500 -1	1 - C11
M055-25-903	2500 -1	1 - C11
M055-25-904	2500 -1	1 - C11
H001-26-042	2600 -1	1 - E11
0730-26-060	2710 -1	1 - H11
0730-26-060	2710A -1	1 - J11
0730-26-060	2710C -1	1 - L11
FB01-26-065A	2600 -1	1 - E11
FB01-26-113A	3300 -3	1 - G13
FB05-26-113A	3300 -3	1 - G13
FB05-26-113A	3300A -2	1 - J13
FB05-26-113A	3300B -2	1 - L13
H001-26-113	2600 -1	1 - E11
H001-26-114A	2600 -1	1 - E11
FB01-26-121A	2610 -1	1 - F11
FB01-26-122	2610 -1	1 - F11
FB01-26-132	2600 -1	1 - E11
FB01-26-133	2600 -1	1 - E11
FB01-26-134	2600 -1	1 - E11
FB01-26-135	2600 -1	1 - E11
FB01-26-136	2600 -1	1 - E11
FB01-26-137	2600 -1	1 - E11
FB01-26-137	3300A -2	1 - J13
FB01-26-137	3300B -2	1 - L13
FB01-26-137	3900B -1	1 - J14
FB01-26-137	3900BA-1	1 - K14
FB05-26-137	2600 -1	1 - E11
FB01-26-138	2610 -1	1 - F11
FB01-26-139	2600 -1	1 - E11
FB01-26-151A	2600 -1	1 - E11
0603-26-161	3700 -1	1 - E14
H001-26-205	2610 -1	1 - F11
FB01-26-220	2830 -1	1 - F12
FB01-26-221A	2600 -1	1 - E11
FB01-26-230	2830 -1	1 - F12
FB01-26-233	2610 -1	1 - F11
FB05-26-233	2610 -1	1 - F11
FB01-26-241	2600 -1	1 - E11
FB05-26-241A	2600 -1	1 - E11
FB01-26-250	2830 -1	1 - F12
FB01-26-251A	2610 -1	1 - F11
FB05-26-251A	2610 -1	1 - F11
FB01-26-261B	2610 -1	1 - F11
FB01-26-281A	2610 -1	1 - F11
FB05-26-281A	2610 -1	1 - F11
FB01-26-285A	2610 -1	1 - F11
FB01-26-335	2600 -1	1 - E11
FC01-26-410	2600 -1	1 - E11
FA67-26-452	2610 -1	1 - F11
F048-26-471	2600 -1	1 - E11
FB01-26-610B	2610 -1	1 - F11
FB05-26-610B	2610 -1	1 - F11
FA18-26-660	2610 -1	1 - F11
FB01-26-668	2610 -1	1 - F11
FB01-26-669	2610 -1	1 - F11
FA18-26-680	2610 -1	1 - F11
FB01-26-694	2610 -1	1 - F11
FA66-26-695	2610 -1	1 - F11
FB01-26-710B	2610 -1	1 - F11
FB05-26-710B	2610 -1	1 - F11
H001-26-731A	2610 -1	1 - F11
FB01-26-800A	2610 -1	1 - F11
FB01-26-810A	2610 -1	1 - F11
H001-26-812	2610 -1	1 - F11
FB01-26-851	2610 -1	1 - F11
FB01-26-861	2610 -1	1 - F11
FB01-26-980F	2610 -1	1 - F11
FB05-26-980F	2610 -1	1 - F11
FB01-26-990F	2610 -1	1 - F11
FB05-26-990F	2610 -1	1 - F11
FA66-26-998	2610 -1	1 - F11
0223-27-012	2710 -1	1 - H11
0223-27-012	2710A -1	1 - J11
0223-27-012	2710C -1	1 - L11
M055-27-017	2710A -1	1 - J11
M055-27-017	2710C -1	1 - L11
0223-27-030	2710 -1	1 - H11
0223-27-030	2710A -1	1 - J11
0223-27-030	2710C -1	1 - L11
M055-27-100D	2710 -1	1 - H11
M067-27-100E	2710 -1	1 - H11
M068-27-100E	2710A -1	1 - J11
M095-27-100F	2710A -1	1 - J11
P090-27-100G	2710C -1	1 - L11
M055-27-110A	2710 -1	1 - H11
M055-27-110A	2710A -1	1 - J11
M067-27-110A	2710 -1	1 - H11
M067-27-110A	2710A -1	1 - J11
P012-27-110A	2710C -1	1 - L11
M055-27-120E	2710 -1	1 - H11
M055-27-120E	2710A -1	1 - J11
P016-27-120F	2710C -1	1 - L11
M055-27-143	2710 -1	1 - H11
M055-27-143	2710A -1	1 - J11
P016-27-143	2710C -1	1 - L11
M055-27-150B	2710 -1	1 - H11
M055-27-150B	2710A -1	1 - J11
P016-27-150A	2710C -1	1 - L11
P090-27-157	2710 -1	1 - H11
P090-27-157	2710A -1	1 - J11
P090-27-157	2710C -1	1 - L11
M055-27-165	2710 -1	1 - H11
M055-27-165	2710A -1	1 - J11
P090-27-165	2710C -1	1 - L11
0305-27-171	2710C -1	1 - L11

PART NUMBER INDEX

PART NUMBER	SECTION	LOCATION
M035-27-171	2710 -1	1 - H11
M035-27-171	2710A -1	1 - J11
M055-27-172B	2710 -1	1 - H11
M055-27-172B	2710A -1	1 - J11
P016-27-172A	2710C -1	1 - L11
M081-27-200	2710A -1	1 - J11
P090-27-200B	2710C -1	1 - L11
0755-27-210	2710 -1	1 - H11
0755-27-210	2710A -1	1 - J11
M025-27-210	2710 -1	1 - H11
M025-27-210	2710A -1	1 - J11
M025-27-210	2710C -1	1 - L11
0604-27-220	2710C -1	1 - L11
M081-27-230	2710A -1	1 - J11
P090-27-230A	2710C -1	1 - L11
M025-27-231B	2710 -1	1 - H11
8051-27-235	2710 -1	1 - H11
8051-27-235	2710A -1	1 - J11
8051-27-235	2710C -1	1 - L11
8051-27-236	2710 -1	1 - H11
8051-27-236	2710A -1	1 - J11
8051-27-236	2710C -1	1 - L11
F003-27-238	2710A -1	1 - J11
F003-27-238A	2710 -1	1 - H11
P016-27-238	2710C -1	1 - L11
M025-27-251	2710 -1	1 - H11
M080-27-251	2710A -1	1 - J11
P090-27-251	2710C -1	1 - L11
0290-27-252	2710 -1	1 - H11
0578-27-252	2710C -1	1 - L11
M020-27-252	2710A -1	1 - J11
0290-27-253	2710 -1	1 - H11
0578-27-253	2710C -1	1 - L11
M020-27-253	2710A -1	1 - J11
0290-27-254	2710 -1	1 - H11
0578-27-254	2710C -1	1 - L11
M020-27-255	2710A -1	1 - J11
M025-27-255B	2710 -1	1 - H11
P020-27-255	2710C -1	1 - L11
0290-27-256	2710 -1	1 - H11
M020-27-256	2710A -2	1 - K11
M025-27-256	2710 -1	1 - H11
P020-27-256	2710C -2	1 - M11
M020-27-257	2710A -2	1 - K11
P020-27-257	2710C -2	1 - M11
M020-27-258	2710A -1	1 - J11
P020-27-258	2710C -1	1 - L11
0290-27-259	2710 -1	1 - H11
M020-27-259	2710A -1	1 - J11
M020-27-261	2710A -1	1 - J11
M025-27-261A	2710 -1	1 - H11
P090-27-261	2710C -1	1 - L11
0114-27-262	2710 -1	1 - H11
M020-27-265	2710A -1	1 - J11
P020-27-265	2710C -1	1 - L11
P020-27-266	2710C -1	1 - L11
M055-27-270	2710 -1	1 - H11
M055-27-270	2710A -1	1 - J11
P016-27-270A	2710C -1	1 - L11
0110-27-301	2710C -1	1 - L11
0290-27-301	2710 -1	1 - H11
0290-27-301	2710A -1	1 - J11
0290-27-302	2710 -1	1 - H11
0290-27-302	2710A -1	1 - J11
0578-27-302	2710C -1	1 - L11
0118-27-350A	2710C -1	1 - L11
0221-27-350	2710 -1	1 - H11
0221-27-350	2710A -1	1 - J11
0223-27-401A	2710 -1	1 - H11
0223-27-401A	2710A -1	1 - J11
0223-27-401A	2710C -1	1 - L11
0223-27-402A	2710 -1	1 - H11
0223-27-402A	2710A -1	1 - J11
0223-27-402A	2710C -1	1 - L11
0223-27-403A	2710 -1	1 - H11
0223-27-403A	2710A -1	1 - J11
0223-27-403A	2710C -1	1 - L11
0223-27-404A	2710 -1	1 - H11
0223-27-404A	2710A -1	1 - J11
0223-27-404A	2710C -1	1 - L11
0223-27-405A	2710 -1	1 - H11
0223-27-405A	2710A -1	1 - J11
0223-27-405A	2710C -1	1 - L11
0223-27-406A	2710 -1	1 - H11
0223-27-406A	2710A -1	1 - J11
0223-27-406A	2710C -1	1 - L11
0223-27-407A	2710 -2	1 - H11
0223-27-407A	2710A -2	1 - K11
0223-27-407A	2710C -1	1 - L11
0223-27-408A	2710 -2	1 - H11
0223-27-408A	2710A -2	1 - K11
0223-27-408A	2710C -2	1 - M11
0223-27-409A	2710 -2	1 - H11
0223-27-409A	2710A -2	1 - K11
0223-27-409A	2710C -2	1 - M11
0223-27-411A	2710 -2	1 - H11
0223-27-411A	2710A -2	1 - K11
0223-27-411A	2710C -2	1 - M11
0223-27-412A	2710 -2	1 - H11
0223-27-412A	2710A -2	1 - K11
0223-27-412A	2710C -2	1 - M11
0223-27-413A	2710 -2	1 - H11
0223-27-413A	2710A -2	1 - K11
0223-27-413A	2710C -2	1 - M11
0223-27-414A	2710 -2	1 - H11
0223-27-414A	2710A -2	1 - K11
0223-27-414A	2710C -2	1 - M11
0223-27-415A	2710 -2	1 - H11
0223-27-415A	2710A -2	1 - K11
0223-27-415A	2710C -2	1 - M11
M005-27-421	2710 -2	1 - H11
M005-27-421	2710A -2	1 - K11
P016-27-421	2710C -2	1 - M11
M055-27-600C	2710 -2	1 - H11
M055-27-600C	2710A -2	1 - K11
P016-27-600B	2710C -2	1 - M11
M053-27-604	2710 -2	1 - H11
M053-27-604	2710A -2	1 - K11
M053-27-605	2710 -2	1 - H11
M053-27-605	2710A -2	1 - K11
M053-27-605	2710C -2	1 - M11
M055-27-609	2710 -2	1 - H11
M055-27-609	2710A -2	1 - K11
M055-27-609	2710C -2	1 - M11
FB01-28-011A	2800 -1	1 - N11
FB01-28-011A	2800A -1	1 - C12
FB01-28-011A	2800B -1	1 - D12
FB67-28-011A	2800 -1	1 - N11
F044-28-013	2800 -1	1 - N11
F044-28-013	2800A -1	1 - C12
F044-28-013	2800B -1	1 - D12
FB01-28-014	2800 -1	1 - N11
FB01-28-014	2800A -1	1 - C12
FB01-28-014	2800B -1	1 - D12
F044-28-015	2800 -1	1 - N11
F044-28-015	2800A -1	1 - C12
F044-28-015	2800B -1	1 - D12
FB01-28-020	2800 -1	1 - N11
FB01-28-020	2800A -1	1 - C12
FB01-28-020	2800B -1	1 - D12
FB01-28-025	2800 -1	1 - N11
FB01-28-025	2800A -1	1 - C12
FB01-28-025	2800B -1	1 - D12
FB01-28-030A	2800 -1	1 - N11
FB01-28-030A	2800A -1	1 - C12
FB01-28-030A	2800B -1	1 - D12
FB01-28-040	2800 -1	1 - N11
FB01-28-040	2800A -1	1 - C12
FB01-28-040	2800B -1	1 - D12
FB01-28-050	2800 -1	1 - N11
FB01-28-050	2800A -1	1 - C12
FB01-28-050	2800B -1	1 - D12
FB07-28-080B	2800A -1	1 - C12
H126-28-088	2800A -1	1 - C12
B037-28-091	2830 -1	1 - F12
B037-28-091	3400 -1	1 - M13
FB01-28-091	2830 -1	1 - F12
H266-28-091	3400 -1	1 - M13
H266-28-091	3400A -1	1 - N13
H266-28-091	3400B -1	1 - C14
FB01-28-092	2830 -1	1 - F12
FB01-28-099	6682 -2	3 - D 3
FB07-28-099	6682 -2	3 - D 3
FB01-28-151B	2810 -1	1 - E12
FB43-28-151C	2810 -1	1 - E12
FB01-28-155	2810 -1	1 - E12
G030-28-155	2810 -1	1 - E12
FB01-28-156	2810 -1	1 - E12
FB43-28-156A	2810 -1	1 - E12
FB01-28-160	2810 -1	1 - E12
FB01-28-160A	2810 -1	1 - E12
FB01-28-170B	2810 -1	1 - E12
FB01-28-200	2800 -1	1 - N11
FB01-28-200	2800B -1	1 - D12
FB01-28-200A	2800A -1	1 - C12
FB01-28-210B	2830 -1	1 - F12
FC01-28-210	2830 -1	1 - F12
FB43-28-300B	2830 -1	1 - F12
H001-28-333	2800 -1	1 - N11
H001-28-333	2800A -1	1 - C12
H001-28-333	2800B -1	1 - D12
H001-28-333	3900B -1	1 - J14
H001-28-333	3900BA-1	1 - K14
FB43-28-350D	2830 -1	1 - F12
F044-28-398A	2830 -1	1 - F12
FB01-28-401	2800 -1	1 - N11
FB01-28-401	2800A -1	1 - C12
FB01-28-401	2800B -1	1 - D12
H001-28-401	2800 -1	1 - N11
H001-28-401	2800A -1	1 - C12
H001-28-401	2800B -1	1 - D12
FB01-28-460	2830 -1	1 - F12
FB01-28-470A	2830 -1	1 - F12
FB01-28-473	2830 -1	1 - F12
FB01-28-700E	2800 -1	1 - N11
FB43-28-700F	2800 -1	1 - N11
FB44-28-700C	2800 -1	1 - N11
FB44-28-700C	2800B -1	1 - D12
FB52-28-700C	2800A -1	1 - C12
FB43-28-800G	2830 -1	1 - F12
FB01-28-830	2830 -1	1 - F12
FB43-28-840	2830 -1	1 - F12
FB01-28-845A	2830 -1	1 - F12
FB43-28-845A	2830 -1	1 - F12
FB43-28-845B	2830 -1	1 - F12
FB43-28-855A	2830 -1	1 - F12
FB43-28-855A	2830 -1	1 - F12
FB43-28-855B	2830 -1	1 - F12
FB01-28-880A	2830 -1	1 - F12
FB01-28-890C	2710 -2	1 - H11
FB01-28-890C	2710A -2	1 - K11
FB01-28-890C	2710C -2	1 - M11
FB01-28-896	2830 -1	1 - F12
FC01-28-980	2830 -1	1 - F12
9923-30-822	1100B -1	1 - J 3
9923-30-822	1100BA-1	1 - J 3
FB01-32-016	3200 -1	1 - H12
B001-32-020	3210 -1	1 - J12
B001-32-020	3210A -1	1 - J12
FB01-32-049	3200 -1	1 - H12
W001-32-084	3210 -1	1 - J12
W001-32-084	3210A -1	1 - J12
W048-32-087	3210 -1	1 - J12
W048-32-087	3210A -1	1 - J12
FB02-32-090B	3210 -1	1 - J12
FB05-32-090F	3210A -1	1 - J12
FB01-32-100	3210 -1	1 - J12
FB01-32-100	3210A -1	1 - J12
FB05-32-100A	3210 -1	1 - J12
FB05-32-100A	3210A -1	1 - J12
FB05-32-101	3210 -1	1 - J12
FB05-32-101	3210A -1	1 - J12
FB05-32-102	3210 -1	1 - J12
FB05-32-102	3210A -1	1 - J12
FB01-32-110F	3220 -1	1 - K12
FB05-32-110F	3220A -1	1 - L12
FB78-32-110C	3220A -1	1 - L12
FB05-32-111	3220A -1	1 - L12
FB01-32-112	3220 -1	1 - K12
FB05-32-112	3220A -1	1 - L12
FB01-32-113	3220 -1	1 - K12
FB05-32-113	3220A -1	1 - L12
FB01-32-114	3220 -1	1 - K12
FB05-32-115	3220A -1	1 - L12
FB01-32-118	3220 -1	1 - K12
FB01-32-119	3220 -1	1 - K12
FB05-32-119	3220A -1	1 - L12
FB01-32-120	3220 -1	1 - K12
FB05-32-120	3220A -1	1 - L12
FB01-32-122	3220 -1	1 - K12
FB01-32-123	3220 -1	1 - K12
FB05-32-123	3220A -1	1 - L12
FB01-32-124	3220 -1	1 - K12
FB01-32-124	3220A -1	1 - L12
FB01-32-125	3220 -1	1 - K12
FB01-32-125	3220A -1	1 - L12
FB01-32-126	3220 -1	1 - K12
FB01-32-126	3220A -1	1 - L12
FB01-32-128	3220 -1	1 - K12
FB01-32-129	3220 -1	1 - K12
FB05-32-129	3220A -1	1 - L12
FB01-32-131	3220 -1	1 - K12
FB05-32-131	3220A -1	1 - L12
FB01-32-132	3220 -1	1 - K12
FB01-32-133	3220 -1	1 - K12
FB05-32-133	3220A -1	1 - L12
FB01-32-134	3220 -1	1 - K12
FB01-32-134	3220A -1	1 - L12
FB01-32-145	3220 -1	1 - K12
FB05-32-147	3220A -1	1 - L12
FB05-32-148	3220A -1	1 - L12
FB05-32-151	3220A -1	1 - L12
FB05-32-152	3220A -1	1 - L12
FB05-32-153	3220A -1	1 - L12

PART NUMBER INDEX

PART NUMBER	SECTION	LOCATION
FB05-32-154	3220A -1	1 - L12
FB05-32-155	3220A -1	1 - L12
FB01-32-157	3210 -1	1 - H12
FB01-32-157	3210A -1	1 - J12
FB05-32-157	3210 -1	1 - H12
FB05-32-157	3210A -1	1 - J12
FB01-32-168	3210 -1	1 - H12
FB01-32-168	3210A -1	1 - J12
B001-32-169A	3210 -1	1 - H12
B001-32-169A	3210A -1	1 - J12
FB05-32-180	3220A -1	1 - L12
FB05-32-186	3220A -1	1 - L12
FB01-32-210	3210 -1	1 - H12
FB01-32-210	3210A -1	1 - J12
FB05-32-230A	3240 -2	1 - D13
FB01-32-240A	3230 -1	1 - M12
FB02-32-240	3230 -1	1 - M12
FB01-32-241	3230 -1	1 - M12
B021-32-279	3230 -1	1 - M12
BAF1-32-280	3230 -1	1 - M12
FB05-32-380	3220A -1	1 - L12
FB05-32-400C	3240 -2	1 - D13
FB78-32-400	3240 -2	1 - D13
FC01-32-410	3240 -2	1 - D13
FB01-32-411A	3210 -1	1 - H12
FB01-32-411A	3210A -1	1 - J12
FB05-32-451	3220A -1	1 - L12
FB05-32-452	3220A -1	1 - L12
FB05-32-470A	3240 -2	1 - D13
FB05-32-480	3240 -2	1 - D13
FB05-32-481	3220A -1	1 - L12
FB05-32-482	3220A -1	1 - L12
FB05-32-490E	3240 -2	1 - D13
FB05-32-600A	3240 -2	1 - D13
FB78-32-600B	3240 -2	1 - D13
FB05-32-610	3240 -2	1 - D13
FB78-32-610A	3240 -2	1 - D13
FB05-32-611	3240 -2	1 - D13
FB05-32-614	3240 -2	1 - D13
FB05-32-620	3240 -2	1 - D13
FB05-32-630	3240 -2	1 - D13
FB05-32-631	3240 -2	1 - D13
FB05-32-632	3240 -2	1 - D13
FB01-32-642	3240 -2	1 - D13
FB05-32-690	3240 -2	1 - D13
FB01-32-730	3200 -1	1 - H12
FB01-32-740	3200 -1	1 - H12
FB01-32-750	3200 -1	1 - H12
FB01-32-760	3200 -1	1 - H12
FB05-32-800A	3200 -1	1 - H12
FB06-32-960A	3200 -1	1 - H12
FB01-32-980B	3200 -1	1 - H12
FB03-32-980B	3200 -1	1 - H12
FB06-32-980B	3200 -1	1 - H12
FB01-32-981	3200 -1	1 - H12
FB01-32-986	3200 -1	1 - H12
F051-33-021B	3300B -2	1 - L13
FB01-33-021B	3300 -3	1 - G13
FB01-33-021B	3300A -2	1 - J13
F051-33-031B	3300B -2	1 - L13
FB01-33-031B	3300 -3	1 - G13
FB01-33-031B	3300A -2	1 - J13
0662-33-042	3300 -3	1 - G13
0662-33-042	3300A -2	1 - J13
0662-33-042	3300B -2	1 - L13
1011-33-043	3300 -3	1 - G13
1011-33-043	3300A -2	1 - J13
1011-33-043	3300B -2	1 - L13
0662-33-049	3300 -3	1 - G13
0662-33-049	3300A -2	1 - J13
0662-33-049	3300B -2	1 - L13
FB01-33-065A	3300 -3	1 - G13
FB01-33-065A	3300A -2	1 - J13
FB01-33-065A	3300B -2	1 - L13
FB01-33-071A	3300 -3	1 - G13
FB01-33-071A	3300A -2	1 - J13
FB01-33-071A	3300B -2	1 - L13
FB01-33-251	3300 -3	1 - G13
FB05-33-251	3300 -3	1 - G13
FB05-33-251	3300A -2	1 - J13
FB05-33-251	3300B -2	1 - L13
FB01-33-260B	3300 -3	1 - G13
FB05-33-260B	3300 -3	1 - G13
FB05-33-260B	3300A -2	1 - J13
FB05-33-260B	3300B -2	1 - L13
FB01-33-270B	3300 -3	1 - G13
FB05-33-270B	3300 -3	1 - G13
FB05-33-270B	3300A -2	1 - J13
FB05-33-270B	3300B -2	1 - L13
FB01-33-281	3300 -3	1 - G13
FC02-33-28Z	3300 -4	1 - H13
FC02-33-28Z	3300A -2	1 - J13
FC02-33-28Z	3300B -2	1 - L13
FB01-33-291	3300 -3	1 - G13
H001-33-302	3400 -1	1 - M13
H001-33-302	3400A -1	1 - N13
H001-33-302	3400B -1	1 - C14
F048-33-471	3300B -2	1 - L13
8BF1-33-625	3300 -4	1 - H13
8BF1-33-625	3300A -2	1 - J13
8BF1-33-625	3300B -2	1 - L13
8341-33-651	3300 -3	1 - G13
FB05-33-651	3300 -3	1 - G13
FB05-33-651	3300A -2	1 - J13
FB05-33-651	3300B -2	1 - L13
0233-33-691	3300 -3	1 - G13
0259-33-691	4140B -1	1 - E15
B107-33-691	2610 -1	1 - F11
FB05-33-691A	3300 -3	1 - G13
FB05-33-691A	3300A -2	1 - J13
FB05-33-691A	3300B -2	1 - L13
0259-33-693	2610 -1	1 - F11
0259-33-693	3300 -3	1 - G13
0259-33-693	4140B -1	1 - E15
FB05-33-693	3300 -3	1 - G13
FB05-33-693	3300A -2	1 - J13
FB05-33-693	3300B -2	1 - L13
8341-33-694	3300 -3	1 - G13
FB05-33-696	3300 -3	1 - G13
FB05-33-696	3300B -2	1 - L13
FB05-33-696B	3300A -2	1 - J13
FB05-33-697	3300 -3	1 - G13
FB05-33-697	3300A -2	1 - J13
FB05-33-697	3300B -2	1 - L13
FA66-33-699	3300 -3	1 - G13
FB01-33-980B	3300 -3	1 - G13
FC02-33-980A	3300 -3	1 - G13
FC02-33-980A	3300A -2	1 - J13
FC02-33-980A	3300B -2	1 - L13
FB01-33-981	3300 -3	1 - G13
FB01-33-981	3300A -2	1 - J13
FB01-33-981	3300B -2	1 - L13
FB01-33-990B	3300 -3	1 - G13
FC02-33-990A	3300 -3	1 - G13
FC02-33-990A	3300A -2	1 - J13
FC02-33-990A	3300B -2	1 - L13
FB01-34-011B	3400 -1	1 - M13
FB44-34-011	3400 -1	1 - M13
FB44-34-011	3400A -1	1 - N13
FB44-34-011	3400B -1	1 - C14
FB67-34-011	3400 -1	1 - M13
FB01-34-012	3400 -1	1 - M13
FB01-34-012	3400A -1	1 - N13
FB01-34-012	3400B -1	1 - C14
FB01-34-019	3400 -1	1 - M13
FB01-34-019	3400B -1	1 - C14
FB01-34-021B	3400 -1	1 - M13
FB44-34-021	3400 -1	1 - M13
FB44-34-021	3400A -1	1 - N13
FB44-34-021	3400B -1	1 - C14
FB67-34-021	3400 -1	1 - M13
H260-34-037A	2800 -1	1 - N11
H260-34-037A	2800A -1	1 - C12
H260-34-037A	2800B -1	1 - D12
FB07-34-080A	3400A -1	1 - N13
H126-34-088A	3400A -1	1 - N13
G054-34-089A	3400A -1	1 - N13
B001-34-091	3400A -1	1 - N13
B001-34-091	3400B -1	1 - C14
FB01-34-096	3410 -1	1 - D14
FB01-34-096	3400 -1	1 - M13
FB01-34-098	3400A -1	1 - N13
FB01-34-098	3400B -1	1 - C14
FB01-34-099A	3400 -1	1 - M13
FB01-34-099A	3400A -1	1 - N13
FB01-34-099A	3400B -1	1 - C14
FB01-34-099A	3410 -1	1 - D14
FB01-34-099A	3410A -1	1 - N13
FB01-34-099A	3410B -1	1 - C14
FB01-34-099A	3410C -1	1 - M13
FB01-34-099C	3400 -1	1 - M13
FB01-34-099C	3400A -1	1 - N13
FB01-34-099C	3400B -1	1 - C14
FB01-34-099C	3410 -1	1 - D14
FB01-34-099C	3410A -1	1 - N13
FB01-34-099C	3410B -1	1 - C14
FB01-34-099C	3410C -1	1 - M13
FB01-34-099D	3400 -1	1 - M13
FB01-34-099D	3400A -1	1 - N13
FB01-34-099D	3400B -1	1 - C14
FB01-34-099D	3410 -1	1 - D14
FB01-34-099D	3410A -1	1 - N13
FB01-34-099D	3410B -1	1 - C14
FB01-34-099D	3410C -1	1 - M13
FB01-34-099E	3400 -1	1 - M13
FB01-34-099E	3400A -1	1 - N13
FB01-34-099E	3400B -1	1 - C14
FB01-34-099E	3410 -1	1 - D14
FB01-34-099E	3410A -1	1 - N13
FB01-34-099E	3410B -1	1 - C14
FB01-34-099E	3410C -1	1 - M13
FB01-34-099F	3400 -1	1 - M13
FB01-34-099F	3400A -1	1 - N13
FB01-34-099F	3400B -1	1 - C14
FB01-34-099F	3410 -1	1 - D14
FB01-34-099F	3410A -1	1 - N13
FB01-34-099F	3410B -1	1 - C14
FB01-34-099F	3410C -1	1 - M13
FB01-34-099G	3400 -1	1 - M13
FB01-34-099G	3400A -1	1 - N13
FB01-34-099G	3400B -1	1 - C14
FB01-34-099G	3410 -1	1 - D14
FB01-34-099G	3410A -1	1 - N13
FB01-34-099G	3410B -1	1 - C14
FB01-34-099G	3410C -1	1 - M13
FB01-34-099H	3400 -1	1 - M13
FB01-34-099H	3400A -1	1 - N13
FB01-34-099H	3400B -1	1 - C14
FB01-34-099H	3410 -1	1 - D14
FB01-34-099H	3410A -1	1 - N13
FB01-34-099H	3410B -1	1 - C14
FB01-34-099H	3410C -1	1 - M13
FB01-34-099J	3400 -1	1 - M13
FB01-34-099J	3400A -1	1 - N13
FB01-34-099J	3400B -1	1 - C14
FB01-34-099J	3410 -1	1 - D14
FB01-34-099J	3410A -1	1 - N13
FB01-34-099J	3410B -1	1 - C14
FB01-34-099J	3410C -1	1 - M13
FB01-34-099K	3400 -1	1 - M13
FB01-34-099K	3400A -1	1 - N13
FB01-34-099K	3400B -1	1 - C14
FB01-34-099K	3410 -1	1 - D14
FB01-34-099K	3410A -1	1 - N13
FB01-34-099K	3410B -1	1 - C14
FB01-34-099K	3410C -1	1 - M13
FB01-34-099L	3400 -1	1 - M13
FB01-34-099L	3400A -1	1 - N13
FB01-34-099L	3400B -1	1 - C14
FB01-34-099L	3410 -1	1 - D14
FB01-34-099L	3410A -1	1 - N13
FB01-34-099L	3410B -1	1 - C14
FB01-34-099L	3410C -1	1 - M13
FB01-34-099M	3400 -1	1 - M13
FB01-34-099M	3400A -1	1 - N13
FB01-34-099M	3400B -1	1 - C14
FB01-34-099M	3410 -1	1 - D14
FB01-34-099M	3410A -1	1 - N13
FB01-34-099M	3410B -1	1 - C14
FB01-34-099M	3410C -1	1 - M13
FB01-34-099N	3400 -1	1 - M13
FB01-34-099N	3400A -1	1 - N13
FB01-34-099N	3400B -1	1 - C14
FB01-34-099N	3410 -1	1 - D14
FB01-34-099N	3410A -1	1 - N13
FB01-34-099N	3410B -1	1 - C14
FB01-34-099N	3410C -1	1 - M13
FB01-34-099P	3400 -1	1 - M13
FB01-34-099P	3400A -1	1 - N13
FB01-34-099P	3400B -1	1 - C14
FB01-34-099P	3410 -1	1 - D14
FB01-34-099P	3410A -1	1 - N13
FB01-34-099P	3410B -1	1 - C14
FB01-34-099P	3410C -1	1 - M13
FB01-34-099Q	3400 -1	1 - M13
FB01-34-099Q	3400A -1	1 - N13
FB01-34-099Q	3400B -1	1 - C14
FB01-34-099Q	3410 -1	1 - D14
FB01-34-099Q	3410A -1	1 - N13
FB01-34-099Q	3410B -1	1 - C14
FB01-34-099Q	3410C -1	1 - M13
FB01-34-099R	3400 -1	1 - M13
FB01-34-099R	3400A -1	1 - N13
FB01-34-099R	3400B -1	1 - C14
FB01-34-099R	3410 -1	1 - D14
FB01-34-099R	3410A -1	1 - N13
FB01-34-099R	3410B -1	1 - C14
FB01-34-099R	3410C -1	1 - M13
FB01-34-099S	3400 -1	1 - M13
FB01-34-099S	3400A -1	1 - N13
FB01-34-099S	3400B -1	1 - C14
FB01-34-099S	3410 -1	1 - D14
FB01-34-099S	3410A -1	1 - N13
FB01-34-099S	3410B -1	1 - C14
FB01-34-099S	3410C -1	1 - M13
FB01-34-099T	3400 -1	1 - M13
FB01-34-099T	3400A -1	1 - N13
FB01-34-099T	3400B -1	1 - C14
FB01-34-099T	3410 -1	1 - D14
FB01-34-099T	3410A -1	1 - N13
FB01-34-099T	3410B -1	1 - C14
FB01-34-099T	3410C -1	1 - M13
FB01-34-099U	3400 -1	1 - M13
FB01-34-099U	3400A -1	1 - N13
FB01-34-099U	3400B -1	1 - C14
FB01-34-099U	3410 -1	1 - D14
FB01-34-099U	3410A -1	1 - N13
FB01-34-099U	3410B -1	1 - C14
FB01-34-099U	3410C -1	1 - M13
FB01-34-099V	3400 -1	1 - M13
FB01-34-099V	3400A -1	1 - N13
FB01-34-099V	3400B -1	1 - C14
FB01-34-099V	3410 -1	1 - D14
FB01-34-099V	3410A -1	1 - N13
FB01-34-099V	3410B -1	1 - C14
FB01-34-099V	3410C -1	1 - M13
FB01-34-099W	3400 -1	1 - M13
FB01-34-099W	3400A -1	1 - N13
FB01-34-099W	3400B -1	1 - C14
FB01-34-099W	3410 -1	1 - D14
FB01-34-099W	3410A -1	1 - N13
FB01-34-099W	3410B -1	1 - C14
FB01-34-099W	3410C -1	1 - M13
FB01-34-099X	3400 -1	1 - M13
FB01-34-099X	3400A -1	1 - N13
FB01-34-099X	3400B -1	1 - C14
FB01-34-099X	3410 -1	1 - D14
FB01-34-099X	3410A -1	1 - N13
FB01-34-099X	3410B -1	1 - C14
FB01-34-099X	3410C -1	1 - M13
FB01-34-099Y	3400 -1	1 - M13
FB01-34-099Y	3400A -1	1 - N13
FB01-34-099Y	3400B -1	1 - C14
FB01-34-099Y	3410 -1	1 - D14
FB01-34-099Y	3410A -1	1 - N13
FB01-34-099Y	3410B -1	1 - C14
FB01-34-099Y	3410C -1	1 - M13
FB01-34-099Z	3400 -1	1 - M13
FB01-34-099Z	3400A -1	1 - N13
FB01-34-099Z	3400B -1	1 - C14
FB01-34-099Z	3410 -1	1 - D14
FB01-34-099Z	3410A -1	1 - N13
FB01-34-099Z	3410B -1	1 - C14
FB01-34-099Z	3410C -1	1 - M13
FB01-34-099AA	3400 -1	1 - M13
FB01-34-099AA	3400A -1	1 - N13
FB01-34-099AA	3400B -1	1 - C14
FB01-34-099AA	3410 -1	1 - D14
FB01-34-099AA	3410A -1	1 - N13
FB01-34-099AA	3410B -1	1 - C14
FB01-34-099AA	3410C -1	1 - M13
FB01-34-099AB	3400 -1	1 - M13
FB01-34-099AB	3400A -1	1 - N13
FB01-34-099AB	3400B -1	1 - C14
FB01-34-099AB	3410 -1	1 - D14
FB01-34-099AB	3410A -1	1 - N13
FB01-34-099AB	3410B -1	1 - C14
FB01-34-099AB	3410C -1	1 - M13
FB01-34-099AC	3400 -1	1 - M13
FB01-34-099AC	3400A -1	1 - N13
FB01-34-099AC	3400B -1	1 - C14
FB01-34-099AC	3410 -1	1 - D14
FB01-34-099AC	3410A -1	1 - N13
FB01-34-099AC	3410B -1	1 - C14
FB01-34-099AC	3410C -1	1 - M13
FB01-34-099AD	3400 -1	1 - M13
FB01-34-099AD	3400A -1	1 - N13
FB01-34-099AD	3400B -1	1 - C14
FB01-34-099AD	3410 -1	1 - D14
FB01-34-099AD	3410A -1	1 - N13
FB01-34-099AD	3410B -1	1 - C14
FB01-34-099AD	3410C -1	1 - M13
FB01-34-099AE	3400 -1	1 - M13
FB01-34-099AE	3400A -1	1 - N13
FB01-34-099AE	3400B -1	1 - C14
FB01-34-099AE	3410 -1	1 - D14
FB01-34-099AE	3410A -1	1 - N13
FB01-34-099AE	3410B -1	1 - C14
FB01-34-099AE	3410C -1	1 - M13
FB01-34-099AF	3400 -1	1 - M13
FB01-34-099AF	3400A -1	1 - N13
FB01-34-099AF	3400B -1	1 - C14
FB01-34-099AF	3410 -1	1 - D14
FB01-34-099AF	3410A -1	1 - N13
FB01-34-099AF	3410B -1	1 - C14
FB01-34-099AF	3410C -1	1 - M13
FB01-34-099AG	3400 -1	1 - M13
FB01-34-099AG	3400A -1	1 - N13
FB01-34-099AG	3400B -1	1 - C14
FB01-34-099AG	3410 -1	1 - D14
FB01-34-099AG	3410A -1	1 - N13
FB01-34-099AG	3410B -1	1 - C14
FB01-34-099AG	3410C -1	1 - M13
FB01-34-099AH	3400 -1	1 - M13
FB01-34-099AH	3400A -1	1 - N13
FB01-34-099AH	3400B -1	1 - C14
FB01-34-099AH	3410 -1	1 - D14
FB01-34-099AH	3410A -1	1 - N13
FB01-34-099AH	3410B -1	1 - C14
FB01-34-099AH	3410C -1	1 - M13
FB01-34-099AJ	3400 -1	1 - M13
FB01-34-099AJ	3400A -1	1 - N13
FB01-34-099AJ	3400B -1	1 - C14
FB01-34-099AJ	3410 -1	1 - D14
FB01-34-099AJ	3410A -1	1 - N13
FB01-34-099AJ	3410B -1	1 - C14
FB01-34-099AJ	3410C -1	1 - M13
FB01-34-099AK	3400 -1	1 - M13
FB01-34-099AK	3400A -1	1 - N13
FB01-34-099AK	3400B -1	1 - C14
FB01-34-099AK	3410 -1	1 - D14
FB01-34-099AK	3410A -1	1 - N13
FB01-34-099AK	3410B -1	1 - C14
FB01-34-099AK	3410C -1	1 - M13
FB01-34-099AL	3400 -1	1 - M13
FB01-34-099AL	3400A -1	1 - N13
FB01-34-099AL	3400B -1	1 - C14
FB01-34-099AL	3410 -1	1 - D14
FB01-34-099AL	3410A -1	1 - N13
FB01-34-099AL	3410B -1	1 - C14
FB01-34-099AL	3410C -1	1 - M13
FB01-34-099AM	3400 -1	1 - M13
FB01-34-099AM	3400A -1	1 - N13
FB01-34-099AM	3400B -1	1 - C14
FB01-34-099AM	3410 -1	1 - D14
FB01-34-099AM	3410A -1	1 - N13
FB01-34-099AM	3410B -1	1 - C14
FB01-34-099AM	3410C -1	1 - M13
FB01-34-099AN	3400 -1	1 - M13
FB01-34-099AN	3400A -1	1 - N13
FB01-34-099AN	3400B -1	1 - C14
FB01-34-099AN	3410 -1	1 - D14
FB01-34-099AN	3410A -1	1 - N13
FB01-34-099AN	3410B -1	1 - C14
FB01-34-099AN	3410C -1	1 - M13
FB01-34-099AP	3400 -1	1 - M13
FB01-34-099AP	3400A -1	1 - N13
FB01-34-099AP	3400B -1	1 - C14
FB01-34-099AP	3410 -1	1 - D14
FB01-34-099AP	3410A -1	1 - N13
FB01-34-099AP	3410B -1	1 - C14
FB01-34-099AP	3410C -1	1 - M13
FB01-34-099AQ	3400 -1	1 - M13
FB01-34-099AQ	3400A -1	1 - N13
FB01-34-099AQ	3400B -1	1 - C14
FB01-34-099AQ	3410 -1	1 - D14
FB01-34-099AQ	3410A -1	1 - N13
FB01-34-099AQ	3410B -1	1 - C14
FB01-34-099AQ	3410C -1	1 - M13
FB01-34-099AR	3400 -1	1 - M13
FB01-34-099AR	3400A -1	1 - N13
FB01-34-099AR	3400B -1	1 - C14
FB01-34-099AR	3410 -1	1 - D14
FB01-34-099AR	3410A -1	1 - N13
FB01-34-099AR	3410B -1	1 - C14
FB01-34-099AR	3410C -1	1 - M13
FB01-34-099AS	3400 -1	1 - M13
FB01-34-099AS	3400A -1	1 - N13
FB01-34-099AS	3400B -1	1 - C14
FB01-34-099AS	3410 -1	1 - D14
FB01-34-099AS	3410A -1	1 - N13
FB01-34-099AS	3410B -1	1 - C14
FB01-34-099AS	3410C -1	1 - M13
FB01-34-099AT	3400 -1	1 - M13
FB01-34-099AT	3400A -1	1 - N13
FB01-34-099AT	3400B -1	1 - C14
FB01-34-099AT	3410 -1	1 - D14
FB01-34-099AT	3410A -1	1 - N13
FB01-34-099AT	3410B -1	1 - C14
FB01-34-099AT	3410C -1	1 - M13
FB01-34-099AU	3400 -1	1 - M13
FB01-34-099AU	3400A -1	1 - N13
FB01-34-099AU	3400B -1	1 - C14
FB01-34-099AU	3410 -1	1 - D14
FB01-34-099AU	3410A -1	1 - N13
FB01-34-099AU	3410B -1	1 - C14
FB01-34-099AU	3410C -1	1 - M13
FB01-34-099AV	3400 -1	1 - M13
FB01-34-099AV	3400A -1	1 - N13
FB01-34-099AV	3400B -1	1 - C14
FB01-34-099AV	3410 -1	1 - D14
FB01-34-099AV	3410A -1	1 - N13
FB01-34-099AV	3410B -1	1 - C14
FB01-34-099AV	3410C -1	1 - M13
FB01-34-099AW	3400 -1	1 - M13
FB01-34-099AW	3400A -1	1 - N13
FB01-34-099AW	3400B -1	1 - C14
FB01-34-099AW	3410 -1	1 - D14
FB01-34-099AW	3410A -1	1 - N13
FB01-34-099AW	3410B -1	1 - C14
FB01-34-099AW	3410C -1	1 - M13
FB01-34-099AX	3400 -1	1 - M13
FB01-34-099AX	3400A -1	1 - N13
FB01-34-099AX	3400B -1	1 - C14
FB01-34-099AX	3410 -1	1 - D14
FB01-34-099AX	3410A -1	1 - N13
FB01-34-099AX	3410B -1	1 - C14
FB01-34-099AX	3410C -1	1 - M13
FB01-34-099AY	3400 -1	1 - M13
FB01-34-099AY	3400A -1	1 - N13
FB01-34-099AY	3400B -1	1 - C14
FB01-34-099AY	3410 -1	1 - D14
FB01-34-099AY	3410A -1	1 - N13
FB01-34-099AY	3410B -1	1 - C14
FB01-34-099AY	3410C -1	1 - M13
FB01-34-099AZ	3400 -1	1 - M13
FB01-34-099AZ	3400A -1	1 - N13
FB01-34-099AZ	3400B -1	1 - C14
FB01-34-099AZ	3410 -1	1 - D14
FB01-34-099AZ	3410A -1	1 - N13
FB01-34-099AZ	3410B -1	1 - C14
FB01-34-099AZ	3410C -1	1 - M13
FB01-34-099BA	3400 -1	1 - M13
FB01-34-099BA	3400A -1	1 - N13
FB01-34-099BA	3400B -1	1 - C14
FB01-34-099BA	3410 -1	1 - D14
FB01-34-099BA	3410A -1	1 - N13
FB01-34-099BA	3410B -1	1 - C14
FB01-34-099BA	3410C -1	1 - M13
FB01-34-099BB	3400 -1	1 - M13
FB01-34-099BB	3400A -1	1 - N13
FB01-34-099BB	3400B -1	1 - C14
FB01-34-099BB	3410 -1	1 - D14
FB01-34-099BB	3410A -1	1 - N13
FB01-34-099BB	3410B -1	1 - C14
FB01-34-099BB	3410C -1	1 - M13
FB01-34-099BC	3400 -1	1 - M13
FB01-34-099BC	3400A -1	1 - N13
FB01-34-099BC	3400B -1	1 - C14
FB01-34-099BC	3410 -1	1 - D14
FB01-34-099BC	3410A -1	1 - N13
FB01-34-099BC	3410B -1	1 - C14
FB01-34-099BC	3410C -1	1 - M13
FB01-34-099BD	3400 -1	1 - M13
FB01-34-099BD	3400A -1	1 - N13
FB01-34-099BD	3400B -1	1 - C14
FB01-34-099BD	3410 -1	1 - D14
FB01-34-099BD	3410A -1	1 - N13
FB01-34-099BD	3410B -1	1 - C14
FB01-34-099BD	3410C -1	1 - M13
FB01-34-099BE	3400 -1	1 - M13
FB01-34-099BE	3400A -1	1 - N13
FB01-34-099BE	3400B -1	1 - C14
FB01-34-099BE	3410 -1	1 - D14
FB01-34-099BE	3410A -1	1 - N13
FB01-34-099BE	3410B -1	1 - C14
FB01-34-099BE	3410C -1	1 - M13
FB01-34-099BF	3400 -1	1 - M13
FB01-34-099BF	3400A -1	1 - N13
FB01-34-099BF	3400B -1	1 - C14
FB01-34-099BF	3410 -1	1 - D14
FB01-34-099BF	3410A -1	1 - N13
FB01-34-099BF	3410B -1	1 - C14
FB01-34-099BF	3410C -1	1 - M13
FB01-34-099BG	3400 -1	1 - M13
FB01-34-099BG	3400A -1	1 - N13
FB01-34-099BG	3400B -1	1 - C14
FB01-34-099BG	3410 -1	1 - D14
FB01-34-099BG	3410A -1	1 - N13
FB01-34-099BG	3410B -1	1 - C14
FB01-34-099BG	3410C -1	1 - M13
FB01-34-099BH	3400 -1	1 - M13
FB01-34-099BH	3400A -1	1 - N13
FB01-34-099BH	3400B -1	1 - C14
FB01-34-099BH	3410 -1	1 - D14
FB01-34-099BH	3410A -1	1 - N13
FB01-34-099BH	3410B -1	1 - C14
FB01-34-099BH	3410C -1	1 - M13
FB01-34-099BJ	3400 -1	1 - M13
FB01-34-099BJ	3400A -1	1 - N13
FB01-34-099BJ	3400B -1	1 - C14
FB01-34-099BJ	3410 -1	1 - D14
FB01-34-099BJ	3410A -1	1 - N13
FB01-34-099BJ	3410B -1	1 - C14
FB01-34-099BJ	3410C -1	1 - M13
FB01-34-099BK	3400 -1	1 - M13
FB01-34-099BK	3400A -1	1 - N13
FB01-34-099BK	3400B -1	1 - C14
FB01-34-099BK	3410 -1	1 - D14
FB01-34-099BK	3410A -1	1 - N13
FB01-34-099BK	3410B -1	1 - C14
FB01-34-099BK	3410C -1	1 - M13
FB01-34-099BL	3400 -1	1 - M13
FB01-34-099BL	3400A -1	1 - N13
FB01-34-099BL	3400B -1	1 - C14
FB01-34-099BL	3410 -1	1 - D14
FB01-34-099BL	3410A -1	1 - N13
FB01-34-099BL	3410B -1	1 - C14
FB01-34-099BL	3410C -1	1 - M13
FB01-34-099BM	3400 -1	1 - M13
FB01-34-099BM	3400A -1	1 - N13
FB01-34-099BM	3400B -1	1 - C14
FB01-34-099BM	3410 -1	1 - D14
FB01-34-099BM	3410A -1	1 - N13
FB01-34-099BM	3410B -1	1 - C14
FB01-34-099BM	3410C -1	1 - M13
FB01-34-099BN	3400 -1	1 - M13
FB01-34-099BN	3400A -1	1 - N13
FB01-34-099BN	3400B -1	1 - C14
FB01-34-099BN	3410 -1	1 - D14

PART NUMBER INDEX

PART NUMBER	SECTION	LOCATION
B001-39-036	3410 -1	1 - D14
B001-39-037B	2800 -1	1 - N11
B001-39-037B	2800A -1	1 - C12
B001-39-037B	2800B -1	1 - D12
B001-39-037B	2830 -2	1 - G12
B001-39-037B	3410 -1	1 - D14
FB01-39-040A	3900B -1	1 - J14
FB01-39-040A	3900BA-1	1 - K14
FB67-39-040A	3900B -1	1 - J14
3975-39-045	3900B -1	1 - J14
3975-39-045	3900BA-1	1 - K14
B092-39-055	3400A -1	1 - N13
FB01-39-340A	3900B -1	1 - J14
FB01-39-340A	3900BA-1	1 - K14
FB67-39-340A	3900B -1	1 - J14
FB01-39-349	3900B -1	1 - J14
FB01-39-349	3900BA-1	1 - K14
FB01-39-350A	3900B -1	1 - J14
FB01-39-350A	3900BA-1	1 - K14
FB02-39-350A	3900B -1	1 - J14
FB01-39-364	3900B -1	1 - J14
FB01-39-364	3900BA-1	1 - K14
F044-39-370D	3900BA-1	1 - K14
FB01-39-370D	3900B -1	1 - J14
FB02-39-370C	3900B -1	1 - J14
FB01-39-385	3900B -1	1 - J14
FB01-39-385	3900BA-1	1 - K14
N326-40-060	4000BA-1	1 - C15
N326-40-060B	4000B -1	1 - L14
N328-40-060	4000B -1	1 - L14
N328-40-060B	4000BA-1	1 - C15
N225-40-061	4000B -1	1 - L14
N225-40-061	4000BA-1	1 - C15
N326-40-065	4000B -1	1 - L14
N326-40-065	4000BA-1	1 - C15
N304-40-073A	4000B -1	1 - L14
N304-40-073A	4000BA-1	1 - C15
N304-40-078A	4000B -1	1 - L14
N304-40-078A	4000BA-1	1 - C15
N326-40-080	4000B -1	1 - L14
N326-40-080	4000BA-1	1 - C15
N327-40-080	4000B -1	1 - L14
N326-40-100L	4000B -1	1 - L14
N332-40-100D	4000BA-1	1 - C15
N332-40-100E	4000BA-1	1 - C15
N338-40-100B	4000B -1	1 - L14
1114-40-160	4000B -1	1 - L14
1114-40-161	4000BA-1	1 - C15
N304-40-161A	4000B -1	1 - L14
0820-40-165	4000B -1	1 - L14
0820-40-165	4000BA-1	1 - C15
0820-40-166	4000B -1	1 - L14
0820-40-166	4000BA-1	1 - C15
N326-40-200J	4000B -1	1 - L14
N332-40-200E	4000BA-1	1 - C15
N332-40-200F	4000BA-1	1 - C15
N338-40-200A	4000B -1	1 - L14
N338-40-200B	4000B -1	1 - L14
N326-40-305	4000B -1	1 - L14
N326-40-305	4000BA-1	1 - C15
N327-40-305	4000B -1	1 - L14
N327-40-305	4000BA-1	1 - C15
N326-40-353	1310B -1	1 - C 4
N326-40-353	1310B -1	1 - C 4
N326-40-353	4000BA-1	1 - C15
2158-40-355	1310B -1	1 - C 4
8118-40-355	4000B -1	1 - L14
8118-40-355	4000BA-1	1 - C15
8134-40-355	1310BA-3	1 - F 4
8134-40-355	4000BA-1	1 - C15
N326-40-357	4000B -1	1 - L14
1480-40-375	4000B -1	1 - L14
1480-40-375	4000BA-1	1 - C15
N332-40-500A	4000BA-1	1 - C15
9926-40-531B	5800AA-1	2 - K11
N326-40-54X	4000B -1	1 - L14
N326-40-54X	4000BA-1	1 - C15
N327-40-54X	4000B -1	1 - L14
N319-40-600B	4000B -1	1 - L14
N319-40-600B	4000BA-1	1 - C15
N326-40-600E	4000B -1	1 - L14
N326-40-600E	4000BA-1	1 - C15
N326-40-640	4000B -1	1 - L14
N326-40-640	4000BA-1	1 - C15
N326-40-690B	4000B -1	1 - L14
N326-40-690B	4000BA-1	1 - C15
N326-40-69XB	4000B -1	1 - L14
N326-40-69XB	4000BA-1	1 - C15
1480-40-815	4000B -2	1 - M14
1480-40-815	4000BA-1	1 - C15
N326-40-815	4000B -2	1 - M14
N326-40-815	4000BA-1	1 - C15
N332-40-823A	4000BA-1	1 - C15
N326-40-844	4000B -2	1 - M14
N326-40-844	4000BA-1	1 - C15
N332 40-860C	4000BA-2	1 - D15
N326-40-861A	4000B -2	1 - M14
N326-40-861A	4000BA-2	1 - D15
N332-40-865	4000BA-2	1 - D15
N326-40-870A	4000B -2	1 - M14
N326-40-870A	4000BA-2	1 - D15
N326-40-874B	4000B -2	1 - M14
N326-40-990C	4000B -2	1 - M14
N332-40-990A	4000BA-2	1 - D15
N326-40-990A	4000B -2	1 - M14
0727-41-023	4300 -1	1 - H15
FB01-41-031C	4300 -1	1 - H15
W090-41-040	4300 -1	1 - H15
0183-41-043	4300 -1	1 - H15
0824-41-051A	4300 -1	1 - H15
0559-41-081A	4300 -1	1 - H15
B092-41-081	4300 -1	1 - H15
0824-41-084	4300 -1	1 - H15
0727-41-131	4300 -1	1 - H15
0305-41-140	4300 -1	1 - H15
FB05-41-140A	4300 -1	1 - H15
9938-41-200F	1040B -1	1 - G 3
9938-41-200F	1040BA-1	1 - H 3
9956-41-200	6600B -3	2 - L15
9956-41-200	6600BA-3	2 - L15
0613-41-308	4400 -1	1 - F16
H005-41-341	4140B -1	1 - E15
3871-41-370	4140B -1	1 - E15
F044-41-370A	4140B -1	1 - E15
F044-41-380B	4140B -1	1 - E15
FB01-41-380	4140B -1	1 - E15
9956-41-400	1040B -1	1 - G 3
9956-41-400	1040BA-1	1 - H 3
FB01-41-400C	4140B -1	1 - E15
W001-41-412	4140B -1	1 - E15
0813-41-422D	4140B -1	1 - E15
H005-41-424	4140B -1	1 - E15
H001-41-443	4300 -1	1 - H15
GA02-41-470	4140B -1	1 - E15
9956-41-600	1040B -1	1 G 3
9956-41-600	1040BA-1	1 - H 3
FB01-41-610	4160 -1	1 - F15
8239-41-619	4160 -1	1 - F15
0259-41-644	4300 -1	1 - H15
B092-41-644	4160 -1	1 - F15
FB01-41-650	4160 -1	1 - F15
FB01-41-650A	4160 -1	1 - F15
B001-41-652	4160 -1	1 - F15
FB01-41-660D	4160 -1	1 - F15
FB44-41-660C	4160 -1	1 - F15
FB44-41-666A	1380BA-4	1 N 5
FB44-41-667A	1300BA-1	1 - N 3
FA54-41-711A	4160 -1	1 - F15
FB44-41-770A	1300BA-1	1 - N 3
FB44 41-780A	4360 -1	1 - N15
FB44 41-780A	4360A -1	1 - C16
F044-41-920C	4140B -1	1 - E15
FB01-41-920A	4140B -1	1 - E15
BC88-42-045	4200 -1	1 - G15
FB01-42-110D	4200 -1	1 - G15
9956-42-200	1500BA-1	1 - I 6
FB01-42-210	4200 -1	1 - G15
FB01-42-210A	4200 -1	1 - G15
FB01-42 210B	4200 -1	1 - G15
FB01-42-240E	4200 -1	1 - G15
FB01 42-245	4200 -1	1 - G15
FB01 42-245A	4200 -1	1 - G15
FB01-42 247A	4200 -1	1 - G15
FB01 42 248	4200 1	1 - G15
FC01-42 250	4200 1	1 - G15
GB53-42-270	4200 -1	1 - G15
FB01-42-285	4200 -1	1 - G15
FB01-42-289	4200 -1	1 - G15
FB01-42-290	4200 -1	1 - G15
0223-42-307	1380B -4	1 - J 5
0866-42-366B	4200 -1	1 - G15
FB01-42-410B	4200 -1	1 - G15
FB01-42-451C	4200 -1	1 - G15
VA64-42-459	4200 -1	1 - G15
FB01-42-531B	4200 -1	1 - G15
FB01-42-561A	4200 -1	1 - G15
FB01-42-562	4200 -1	1 - G15
FB01-42-565	4200 -1	1 - G15
FB01-42-611	4500B -1	1 - G16
FB01-42-611	4500BA-1	1 - H16
FB01-42-710	4200 -1	1 - G15
FB01-42-710A	4200 -1	1 - G15
FB01-42-715	4200 -1	1 - G15
FB01-42-720	4200 -1	1 - G15
FB01-42-720A	4200 -1	1 - G15
FB01-42-761	4200 -1	1 - G15
8531-42-762A	4200 -1	1 - G15
H260-42-780	4200 -1	1 - G15
H260-42-790	4200 -1	1 - G15
FB01-42-910	4200 -1	1 - G15
FB01-42-980	4200 -1	1 - G15
FB01-42-985	4200 -1	1 - G15
FB01-43-028A	4300 -1	1 - H15
S083-43-028	4300 -1	1 - H15
B001-43-029	4160 -1	1 - F15
B001-43-029	4300 -1	1 - H15
G030-43-029	4300 -1	1 - H15
FB01-43-031	4300 -1	1 H15
FB02-43-031	4300 -1	1 - H15
FB01-43-040B	4300 -1	1 - H15
FB01-43-042	4300 -1	1 - H15
0866-43-062	4300 -1	1 - H15
FB01-43-063	4300 -1	1 - H15
FB01-43-070E	4300 -1	1 - H15
FB05-43-070A	4300 -1	1 - H15
FB02-43-090A	4300 -1	1 - H15
H001-43-095	5390 -2	2 - D 6
FB01-43-140	4300 -1	1 - H15
D001-43-152	4300 -1	1 - H15
D001-43 152	4600 -1	1 - I16
GE68-43-231	4300 -1	1 - H15
H001-43-301	4300 -1	1 - H15
FB55-43-310A	4370 -2	1 - E16
FB55-43-320B	4370 -2	1 - E16
FB55-43-330A	4370 -2	1 - E16
FB55-43-350A	4370 -2	1 E16
F048-43 360	4360A -1	1 C16
FB01-43 360	4360 -1	1 - N15
FB02-43-370	4360 1	1 - N15
FB55-43-370	4360A -1	1 C16
FB02-43-400C	4340 -2	1 - K15
FB08-43-400C	4340 -2	1 - K15
FB55-43-400A	4340A -2	1 - M15
FB60-43-400A	4340A -2	1 - M15
FB07-43-410	4340 -2	1 - K15
FB07-43-410	4340A -2	1 - M15
H001-43-443	4340 -2	1 - K15
H001-43-443	4340A -2	1 - M15
W023-43-504	4370 -2	1 - E16
FB01-43-540	4340 -2	1 - K15
FB01-43-540	4340A -2	1 - M15
0136-43 635	4140B -1	1 - E15
W023-43-635	4360 -1	1 - N15
W023-43-635	4360A -1	1 - C16
W023-43-635	4400 -1	1 - F16
FB01-43-63XB	4360 -1	1 - N15
FB01-43-63XB	4360A -1	1 - C16
FB01-43-640	4340 -2	1 - K15
FB01-43-640	4340A -2	1 - M15
FB01-43-64XB	4360 -1	1 - N15
FB01-43-64XB	4360A -1	1 - C16
8573-43-694	4340 2	1 - K15
8573-43-694	4340A -2	1 - M15
B001-43-694A	4360 -1	1 N15
B001-43-694A	4360A -1	1 - C16
B001-43-694A	4370 -2	1 - E16
F051-43-708A	4370 -2	1 - E16
F051-43-709	4370 -2	1 - E16
F051-43-70XB	4370 -2	1 - E16
FB05-43-710B	4360 -1	1 - N15
FB05-43-710B	4360A -1	1 - C16
F051-43-71YC	4370 -2	1 - E16
FB05-43-720B	4360 -1	1 - N15
FB05-43-720B	4360A -1	1 - C16
F051-43-72YC	4370 -2	1 - E16
F051-43 73XB	4370 -2	1 - E16
FB01-43-750	4340 -2	1 - K15
FB01-43-750	4340A -2	1 - M15
FB44-43-770	4340 -2	1 - K15
FB44-43-770	4340A -2	1 - M15
F048-43-776B	4370 -2	1 - E16
FB36-43-798C	4370 -2	1 - E16
FB55-43-799	4370 -2	1 - E16
F048-43-7A0E	4370 -2	1 - E16
F048-43-7A2	4370 -2	1 - E16
F048-43-7A3	4370 -2	1 - E16
F048-43-7A4B	4370 2	1 - E16
F048-43-7A5	4370 -2	1 - E16
F048-43-7A6	4370 -2	1 - E16
F048-43-7A7	4370 2	1 E16
F048-43-7A8	4370 2	1 E16
F048-43-7A9	4370 -2	1 E16
F048 43 7B0B	4370 -2	1 E16
F048 43-7C0	4370 -2	1 E16
FB55 43 7Z1	4370 2	1 E16

PART NUMBER INDEX

PART NUMBER	SECTION	LOCATION
FB01-43-800C	4340 -2	1 - K15
FB05-43-800D	4340 -2	1 - K15
FB05-43-800D	4340A -2	1 - M15
FB01-43-810A	4360A -1	1 - C16
FB01-43-810B	4360 -1	1 - N15
FB05-43-810	4360 -1	1 - N15
FB05-43-810	4360A -1	1 - C16
FB01-43-830A	4340 -2	1 - K15
FB01-43-830A	4340A -2	1 - M15
2192-43-835A	4340 -2	1 - K15
2192-43-835A	4340A -2	1 - M15
FB01-43-836	4340 -2	1 - K15
FB01-43-836	4340A -2	1 - M15
FB44-43-836B	4340 -2	1 - K15
FB44-43-836B	4340A -2	1 - M15
FB45-43-836A	4340 -2	1 - K15
FB45-43-836A	4340A -2	1 - M15
FB01-43-840	4340 -2	1 - K15
FB01-43-840	4340A -2	1 - M15
FB44-43-840B	4340 -2	1 - K15
FB44-43-840B	4340A -2	1 - M15
FB44-43-850B	4340 -2	1 - K15
FB44-43-850B	4340A -2	1 - M15
FB44-43-880B	4340 -2	1 - K15
FB44-43-880B	4340A -2	1 - M15
FB10-43-900	4360 -1	1 - N15
FB10-43-900	4360A -1	1 - C16
FB01-43-980	4360 -1	1 - N15
FB01-44-010B	4400 -1	1 - F16
G030-44-031	4400 -1	1 - F16
FB01-44-033	4400 -1	1 - F16
FB01-44-034	4400 -1	1 - F16
FB01-44 061B	4400 -1	1 - F16
FB01-44-062A	4400 -1	1 - F16
FB01-44-150B	4400 -1	1 - F16
0866-44-187A	4400 -1	1 - F16
0866-44-189	4400 -1	1 - F16
FB01-44-410E	4400 -1	1 - F16
1011-44-439	4400 -1	1 - F16
FB01-44-439A	4400 -1	1 - F16
FB01-45-111C	4500B -1	1 - G16
FB01-45-111C	4500BA-1	1 - H16
FB70-45-111	4500B -1	1 - G16
FA66-45-125A	1320B 2	1 - H 4
8116-45 146	1320B 2	1 - H 4
8116 45 46	1320BA-2	1 - J 4
8116 45 146	4500B -1	1 - G16
8986 45 146	4500B 1	1 - G16
8986 45 146	4500BA 1	1 - H16
FA23 45 181	4500BA-1	1 H16
FA23 45 182	4500BA 1	1 H16
FB01 45 280E	4360 1	1 N15
FB55 45 280D	4360A 1	1 C 16
FB55 45 280E	4360A 1	1 C 16
FB01 45 291A	4360 1	1 N15
FB01-45-291A	4360A -1	1 - C16
FB01-45-320	4360 -1	1 - N15
FB55-45-320F	4360A -1	1 - C16
FB55-45-330E	4360A -1	1 - C16
FB55-45-340E	4360A -1	1 - C16
FB01-45-360C	4360 -1	1 - N15
FB55-45-360B	4360A -1	1 - C16
FB01-45-370D	4360 -1	1 - N15
FB01-45-370D	4360A -1	1 C16
FB01-45-380D	4360 -1	1 - N15
FB01-45-380D	4360A -1	1 - C16
FB01-45-510A	4140B -1	1 - E15
FB44-45-510	4140B -1	1 - E15
WA01-45-512	5030A -1	2 - H 3
FB01-45-611E	4500B -1	1 - G16
FB01-45-611E	4500BA-1	1 - H16
FB01-45-711B	4500B -1	1 - G16
FB01-45-711B	4500BA-1	1 - H16
FB01-45-712D	4500B -1	1 - G16
FB01-45-720D	4500B -1	1 - G16
FB55-45-721	4500BA-1	1 - H16
FB55-45-722A	4500BA-1	1 - H16
FB55-45-731	4500BA-1	1 - H16
FB55-45-732A	4500BA-1	1 - H16
UA01-45-902	4360A -1	1 - C16
8173-45-903	1910 -1	1 - K 8
FB01-45-910	4500B -1	1 - G16
FB01-45-910	4500BA-1	1 - H16
FB67-45-910	4500B -1	1 - G16
FB01-45-912	4500B -1	1 - G16
FB01-45-912	4500BA-1	1 - H16
G037-45-913	4500B -1	1 - G16
G037-45-913	4500BA-1	1 - H16
FB01-45-914	4500B -1	1 - G16
FB01-45-914	4500BA-1	1 - H16
B075-45-918	4500BA-1	1 - H16
B180-45-918	4500B -1	1 - G16
FB01-45 919	4500B -1	1 - G16
FB01-45-919	4500BA-1	1 - H16
G030-45-919	4360 -1	1 - N15
G030-45-919	4360A -1	1 - C16
G030-45-919	4500B -1	1 - G16
G030 45-919	4500BA-1	1 - H16
FB01-45-920	4500B -1	1 G16
FB01-45-920	4500BA-1	1 - H16
F048-45-930	4500BA 1	1 - H16
FB01-45-930	4500B 1	1 - G16
FB01-45 940	4500B 1	1 G16
FB01 45-940	4500BA 1	1 H16
FB55-45-951	4360A 1	1 C16
FB55 45 961A	4360 1	1 N15
FB55 45 961A	4360A 1	1 C16
H002 45 961	4360 1	1 N15
H002 45 96.	4360A 1	1 C16
H002 45 961	6682 2	3 D 3
H002-45-961	6704 -2	3 - F 4
FB01-45-963	4500B -1	1 - G16
F048-45-964	4360A -1	1 - C16
FB01-45-970	4500B -1	1 - G16
FB01-45-980A	4500B -1	1 - G16
FB01-45-980A	4500BA-1	1 - H16
FB01-45-990	4500B -1	1 - G16
FB01-45-990	4500BA-1	1 - H16
H002-46-016A	4600 -1	1 - I16
FB02-46-040B	4600 -1	1 - I16
FB02-46-040B00	4600 -1	1 - I16
FB02-46-050E	4600 -1	1 - I16
FB02-46-050E00	4600 -1	1 - I16
FB02-46-058C	4600 -1	1 - I16
FB02-46-074	4600 -1	1 - I16
1481-46-084A	4600 -1	1 - I16
1015-46-085	4300 -1	1 - H15
FB02-46-085	4600 -1	1 - I16
FB02-46-088	4600 -1	1 - I16
FB02-46-092	4600 -1	1 - I16
FB02-46-093	4600 -1	1 - I16
FB02-46-100D	4600 -1	1 - I16
FB02-46-100D	4600 -1	1 - I16
FB02-46-110	4600 -1	1 - I16
H002-46-152	4600 -1	1 - I16
FB02-46-216B	4600 -1	1 - I16
FB02-46-571B	4600 -1	1 - I16
0187-46-683	4300 -1	1 - H15
1015-46-684A	4600 -1	1 - I16
FB02-46-684	4600 -1	1 - I16
FB02-46-757B	4600 -1	1 - I16
0604-46-785	4300 -1	1 - H15
FB01-49-060E	3300 -3	1 - G13
FB05-49-060E	3300 -3	1 - G13
FB05-49-060E	3300A -2	1 - J13
FB05-49-060E	3300B -2	1 - J13
FB01-49-130	2600 -1	1 - E11
FB01-49-140	2600 -1	1 - E11
8341-49-240	3300 -4	1 - H13
FB02-49-240	2610 -1	1 F11
FB05-49-240	3300 -3	1 - G13
FB05-49-240	3300A -2	1 - J13
FB05-49-240	3300B -2	1 - J13
H010-49-240	2610 -1	1 F11
FA66-49-250	3300 -4	1 - H13
FA66-49-280	3300 -4	1 - H13
FB06-49-280	2610 -1	1 - F11
FB06-49-280A	2610 -2	1 - G11
FA66 49 290A	3300 4	1 - H13
FB02-49-290B	2610 2	1 G11
FB05 49 290	3300B 2	1 J13
FB05 49 290B	3300 -4	1 H13
FB05 49 290B	3300A 2	1 J13
FB06 49 290B	2610 2	1 G11
FB01 49 460	4140B 1	1 - E15
FB01-49-470	4140B -1	1 - E15
FB01-49-520A	4140B -1	1 - E15
FB01-49-530A	4140B -1	1 - E15
H115-49-570B	4140B -1	1 - E15
B093-49-580	4140B -1	1 - E15
B093-49-580	4140B -1	1 - E15
B093-49-580	4340 -2	1 - K15
B093-49-580	4340A -2	1 - M15
GA02-49-580B	4340A -2	1 - M15
HA18-49-610	4340 -2	1 - K15
HA18-49-610	4340A -2	1 - M15
FB01-49-625	4340 -2	1 - K15
FB01-49-625	4340A -2	1 - M15
0305-49-626	4340 -2	1 - K15
0305-49-626	4340A -2	1 - M15
1708-49-635	4340 -2	1 - K15
1708-49-635	4340A -2	1 - M15
HA18-49-640	4340 -2	1 - K15
HA18-49-640	4340A -2	1 - M15
F048-49-680	4340A -2	1 - M15
FB01-49-680	4340 -2	1 - K15
0305-49-686B	4140B -1	1 - E15
0305-49-686B	4340 -2	1 - K15
0305-49-686B	4340A -2	1 - M15
FB01-49-720	4340 -2	1 - K15
FB05-49-720	4340 -2	1 - K15
FB05-49-720	4340A -2	1 - M15
FB01-50-031C	5000 -1	2 - E 3
FB01-50-050A	5000 -1	2 - E 3
FA01-50-054	4360 -1	1 - N15
FA01-50-054	4360A 1	1 - C16
FB01-50-054	5000 -1	2 - E 3
FB01-50-05Y	5000 -1	2 - E 3
FB01-50-06Y	5000 -1	2 - E 3
FB01-50-071	5000 -1	2 - E 3
FB01-50-072	5000 -1	2 - E 3
FB01-50-072	5010A -1	2 - G 3
FB01-50-080A	5000 -1	2 - E 3
FB01-50-090A	5000 -1	2 - E 3
FB01-50-101	5005 -1	2 - F 3
FB01-50-102	5005 1	2 - F 3
FB01-50-103	5005 -1	2 F 3
FB01-50-104	5005 -1	2 F 3
FB01-50-105	5005 -1	2 - F 3
FB01-50-110	5000 -1	2 - E 3
FB01-50-120	5000 -1	2 E 3
FB01-50-131A	5000 1	2 E 3
FB01 50-132	5000 -1	2 E 3
FB01-50-133	5000 1	2 E 3
FB01 50 134	5000 -1	2 E 3
FB01 50 135	5000 1	2 E 3
FB01 50 140	5000 1	2 E 3
FB01 50 144	5000 1	2 E 3
FB01 50 151	5000 1	2 E 3
3597 50 152	5010A 1	2 - G 3
FB01-50-160	5000 -1	2 - E 3
FB01-50-171	5000 -1	2 - E 3
FB01-50-172	5000 -1	2 - E 3
FB01-50-180	5000 -1	2 - E 3
FB01-50-184	5000 -1	2 - E 3
FB01-50-190	5000 -1	2 - E 3
FB01-50-221	5010A -1	2 - G 3
BF82-50-233	5000 -1	2 - E 3
FB01-50-280	5010A -1	2 - G 3
G030-50-285	5010A -1	2 - G 3
FB01-50-290	5010A -1	2 - G 3
FB01-50-311	5000 -1	2 - E 3
FB01-50-321	5010A -1	2 - G 3
FB01-50-322	5010A -1	2 - G 3
FB01-50-330B	5010A -1	2 - G 3
FB01-50-341	5010A -1	2 - G 3
FB01-50-342	5010A -1	2 - G 3
FB01-50-350	5010A -1	2 - G 3
FB01-50-360	5010A -1	2 G 3
FB01-50-370	5010A -1	2 - G 3
FB01-50-380	5010A -1	2 - G 3
FB01-50-390	5010A -1	2 - G 3
F044-50-425	5230 -1	2 - K 4
FB01-50-601A	5030A -1	2 - H 3
FB01-50-611B	5030A -1	2 - H 3
FB01-50-611C	5030A -1	2 - H 3
FB01-50-615B	5030A -1	2 - H 3
FB01-50-615C	5030A -1	2 - H 3
F044-50-650B	5230 -1	2 - K 4
F044-50-653A	5230 -1	2 - K 4
F044-50-655B	5230 -1	2 - K 4
F044-50-656A	5230 -1	2 - K 4
FB02-50-681	5060A -1	2 - J 3
FB02-50-682	5060A -1	2 - J 3
FB02-50-683	5060A -1	2 - J 3
FB02-50-691	5060A -1	2 - J 3
FB02-50-692	5060A -1	2 - J 3
FB02-50-693	5060A -1	2 - J 3
FB01-50-6A8	5030A -1	2 - H 3
FB01-50-732	7800 -1	3 - K 7
FB01-50-733	5000 -1	2 E 3
G043-50-753	5180 -2	2 - J 4
FB67-50-764A	6860AB-1	3 E 6
FB01-50 790B	5180 -2	2 J 4
FB01-50-792	5180 -2	2 - J 4
FB01-50-795A	5180 2	2 J 4
UB39-50 795	5103 -1	2 J 3
F044-50 7M1	5230 -1	2 K 4
F044 50 7M2	5230 1	2 K 4
FB01 50-7P1A	5180 2	2 J 4
FB01 50-818	5180 2	2 J 4
FB01 50 841	5180 2	2 J 4
FB01 50 850C	5180 2	2 J 4
FB67 50-850A	5180 2	2 J 4
FB01 50 852A	5180 2	2 J 4

PART NUMBER INDEX

PART NUMBER INDEX

PART NUMBER	SECTION	LOCATION
FB67-50-852	5180 -2	2 - J 4
FB01-50-853	5180 -2	2 - J 4
FB67-50-853	5180 -2	2 - J 4
FB01-50-854	5180 -2	2 - J 4
FB67-50-854	5180 -2	2 - J 4
FB67-50-855	5180 -2	2 - J 4
FB67-50-856	5180 -2	2 - J 4
FB67-50-857	5180 -2	2 - J 4
8AF1-50-860	5030A -1	2 - H 3
8AF1-50-870	5030A -1	2 - H 3
FB01-50-891	6300A -1	2 - N14
FB01-50-893	6300A -1	2 - N14
FB01-50-895A	6300A -1	2 - N14
FB01-50-896	6300A -1	2 - N14
FB01-50-897	6300A -1	2 - N14
FB01-50-910	5060A -1	2 - J 3
FB01-50-920	5060A -1	2 - J 3
FB01-50-930	5060A -1	2 - J 3
FB01-50-940	5060A -1	2 - J 3
FB01-50-942A	5040A -1	2 - I 3
FB01-50-943A	5040A -1	2 - I 3
FB01-50-945	5060A -1	2 - J 3
FB01-50-981B	5800A -1	2 - J11
FB67-50-981	5800AA-1	2 - K11
FB67-50-981A	5800AA-1	2 - K11
FB01-50-985B	5800A -1	2 - J11
FB67-50-985	5800AA-1	2 - K11
FB67-50-985A	5800AA-1	2 - K11
B250-50-9V2	5180 -2	2 - J 4
8BF1-51-032	5100 -1	2 - K 3
FB01-51-032	5100 -1	2 - K 3
BA03-51-033	5100 -1	2 - K 3
8239-51-035	5100 -1	2 - K 3
FB01-51-036	5100 -1	2 - K 3
FB01-51-037	5100 -1	2 - K 3
8BF1-51-042	5100 -1	2 - K 3
FB01-51-042	5100 -1	2 - K 3
FB01-51-047	5100 -1	2 - K 3
8BF1-51-060A	5105 -1	2 - M 3
FB01-51-061	5105 -1	2 - M 3
FB01-51-063	5105 -1	2 - M 3
8BF1-51-070A	5105 -1	2 - M 3
FB01-51-071	5105 -1	2 - M 3
G031-51-075	5105 -1	2 - M 3
FB01-51-0G1	5100 -1	2 - K 3
9970-51-107	6700 -1	3 - G 3
9970-51-107	6700A -1	3 - H 3
9970-51-110	6700 -1	3 - G 3
9970-51-110	6700A -1	3 - H 3
9970-51-115	6700 -1	3 - G 3
9970-51-115	6700A -1	3 - H 3
8BF1-51-120	5105 -1	2 - M 3
9970-51-120	6700A -1	3 - H 3
FB01-51-123	5105 -1	2 - M 3
8BF1-51-130	5105 -1	2 - M 3
9970-51-130	6700 -1	3 - G 3
9970-51-130	6700A -1	3 - H 3
FB01-51-133	5105 -1	2 - M 3
FB01-51-141	5110A -1	2 - C 4
FB67-51-141	5110A -1	2 - C 4
8BF1-51-150	5110A -1	2 - C 4
8BF7-51-150	5110A -1	2 - C 4
FB01-51-151	5110A -1	2 - C 4
FB67-51-151	5110A -1	2 - C 4
FB01-51-154	5120 -1	2 - E 4
FB01-51-156	5110A -1	2 - C 4
FB01-51-157	5120 -1	2 - E 4
FB01-51-158	5110A -1	2 - C 4
FB01-51-159	5110A -1	2 - C 4
FB34-51-159	5110A -1	2 - C 4
8BF1-51-160	5110A -1	2 - C 4
FB01-51-161	5110A -1	2 - C 4
FB67-51-161	5110A -1	2 - C 4
FB01-51-164	5120 -1	2 - E 4
FB01-51-169	5110A -1	2 - C 4
FB34-51-169	5110A -1	2 - C 4
FB01-51-170	5110A -1	2 - C 4
FB67-51-170	5110A -1	2 - C 4
FB01-51-171	5110A -1	2 - C 4
FB34-51-171	5110A -1	2 - C 4
FB01-51-172	5120 -1	2 - E 4
FB01-51-175	5110A -1	2 - C 4
FB01-51-176	5110A -1	2 - C 4
FB01-51-180	5110A -1	2 - C 4
FB67-51-180	5110A -1	2 - C 4
FB01-51-185	5110A -1	2 - C 4
FB01-51-186	5110A -1	2 - C 4
8BF1-51-270	5120 -1	2 - E 4
FB67-51-272	5120 -1	2 - E 4
FB67-51-273	5120 -1	2 - E 4
FB67-51-276	5120 -1	2 - E 4
FB01-51-360B	5103 -1	2 - L 3
FB01-51-370B	5103 -1	2 - L 3
FB34-51-408	6930 -1	3 - H 7
FB34-51-408	6930 -1	3 - H 7
8BF1-51-411	5103 -1	2 - L 3
FB01-51-411A	5103 -1	2 - L 3
FB01-51-421A	5103 -1	2 - L 3
FB01-51-430	5125 -1	2 - F 4
FB01-51-441	5125 -1	2 - F 4
FB01-51-442A	5125 -1	2 - F 4
FB01-51-445	5125 -1	2 - F 4
8545-51-460	5125 -1	2 - F 4
8545-51-461	5125 -1	2 - F 4
FB01-51-510F	5103 -1	2 - L 3
FB01-51-511	5103 -1	2 - L 3
H001-51-511	5103 -1	2 - L 3
FB01-51-512	5103 -1	2 - L 3
FB01-51-513D	5103 -1	2 - L 3
FB01-51-514	5103 -1	2 - L 3
FB01-51-515	5103 -1	2 - L 3
FB01-51-516	5103 -1	2 - L 3
FB01-51-517	5103 -1	2 - L 3
FB01-51-518	5103 -1	2 - L 3
FB01-51-520F	5103 -1	2 - L 3
FB01-51-521	5103 -1	2 - L 3
FB01-51-522	5103 -1	2 - L 3
FB01-51-523D	5103 -1	2 - L 3
FB01-51-524	5103 -1	2 - L 3
FB01-51-525	5103 -1	2 - L 3
FB05-51-530	5840A -1	2 - C13
FB05-51-530	5840AB-1	2 - K13
FB05-51-531	5840A -1	2 - C13
FB05-51-531	5840AB-1	2 - K13
8BF1-51-550	5120 -1	2 - E 4
FB01-51-552A	5120 -1	2 - E 4
FB01-51-554	5120 -1	2 - E 4
FB01-51-555	5120 -1	2 - E 4
8BF1-51-560	5120 -1	2 - E 4
FB01-51-565	5120 -1	2 - E 4
FB01-51-580B	5110A -1	2 - C 4
FB01-51-582A	5110A -1	2 - C 4
FB01-51-583A	5110A -1	2 - C 4
FB01-51-584A	5110A -1	2 - C 4
FB01-51-584A	5110A -2	2 - D 4
FB01-51-586	5110A -2	2 - D 4
FB01-51-587	5110A -2	2 - D 4
FB05-51-590	5840A -1	2 - C13
FB05-51-590	5840AB-1	2 - K13
FB05-51-591	5840A -1	2 - C13
FB05-51-591	5840AB-1	2 - K13
FB01-51-611	5103 -1	2 - L 3
FB01-51-621A	5103 -1	2 - L 3
FB01-51-622A	5103 -1	2 - L 3
FB01-51-623	5103 -1	2 - L 3
FB01-51-631A	5103 -1	2 - L 3
FB01-51-632A	5103 -1	2 - L 3
FB01-51-633	5103 -1	2 - L 3
FB01-51-651A	5103 -1	2 - L 3
FB01-51-652A	5103 -1	2 - L 3
FB01-51-662A	5103 -1	2 - L 3
FB01-51-663	5103 -1	2 - L 3
FB01-51-664A	5103 -1	2 - L 3
FB01-51-66X	5103 -1	2 - L 3
FB01-51-672A	5103 -1	2 - L 3
FB01-51-67X	5103 -1	2 - L 3
FB01-51-711	5170 -1	2 - H 4
FB01-51-711 01	5170 -1	2 - H 4
FB01-51-711 08	5170 -1	2 - H 4
FB01-51-712	5170 -1	2 - H 4
FB01-51-712 01	5170 -1	2 - H 4
FB01-51-712 08	5170 -1	2 - H 4
FB01-51-721A	5170 -1	2 - H 4
FB01-51-721A05	5170 -1	2 - H 4
FB01-51-721A06	5170 -1	2 - H 4
FB02-51-740	5170 -1	2 - H 4
F044-51-761	5170 -1	2 - H 4
F044-51-761 01	5170 -1	2 - H 4
F044-51-761 08	5170 -1	2 - H 4
FB01-51-761	5170 -1	2 - H 4
FB01-51-761 01	5170 -1	2 - H 4
FB01-51-761 08	5170 -1	2 - H 4
FB02-51-761	5170 -1	2 - H 4
FB02-51-761 01	5170 -1	2 - H 4
FB02-51-761 08	5170 -1	2 - H 4
FB51-51-761	5170 -1	2 - H 4
FB51-51-761 08	5170 -1	2 - H 4
FB51-51-761 10	5170 -1	2 - H 4
H001-51-782	5170 -1	2 - H 4
FB01-51-816	6720 -2	3 - H 4
B092-51-833	5000 -1	2 - E 3
B092-51-833	5310 -1	2 - M 4
B092-51-833	5310A -1	2 - N 4
B092-51-833	5320 -1	2 - C 5
B092-51-833	5320B -1	2 - D 5
F044-51-890A	5180 -2	2 - J 4
S232-51-906	5000 -1	2 - E 3
F044-51-910A	5180 -2	2 - J 4
F044-51-912	5180 -2	2 - J 4
FB01-51-920A	5180 -2	2 - J 4
FB01-51-922	5180 -2	2 - J 4
F044-51-930A	5180 -2	2 - J 4
FB01-51-940A	5180 -2	2 - J 4
FB01-51-960A	7800 -1	3 - K 7
FB03-51-960	7800 -1	3 - K 7
FB03-51-960 J5	7800 -1	3 - K 7
FB03-51-960 PZ	7800 -1	3 - K 7
FB03-51-960 RH	7800 -1	3 - K 7
FB03-51-960 WY	7800 -1	3 - K 7
FB01-51-962	7800 -1	3 - K 7
FB03-51-962	7800 -1	3 - K 7
FB03-51-962 J5	7800 -1	3 - K 7
FB03-51-962 PZ	7800 -1	3 - K 7
FB03-51-962 RH	7800 -1	3 - K 7
FB03-51-962 WY	7800 -1	3 - K 7
FB01-51-963A	7800 1	3 - K 7
FB02-51-963	7800 -1	3 - K 7
FB02-51-964	7800 -1	3 - K 7
FB01-51-966	7800 -1	3 - K 7
FB01-51-966B	7800 -1	3 - K 7
FB03-51-9A1	7800 -1	3 - K 7
FB03-51-9A2	7800 -1	3 - K 7
FB01-51-9B0A	7800 -1	3 - K 7
FB01-51-9B3	7800 -1	3 - K 7
FB01-51-9B4	7800 -1	3 - K 7
FB01-51-9B5	7800 -1	3 - K 7
FB01-51-9C0A	7800 -1	3 - K 7
FB01-51-9J1A	7800 1	3 - K 7
FB01-51-9K0A	7800 1	3 - K 7
FB01-51-9K2	7800 -1	3 - K 7
FB01-51-9L0A	7800 -1	3 - K 7
FB01-51-9L2	7800 -1	3 - K 7
FB01-51-9L3	7800 -1	3 - K 7
FB02-51-9LX8	7800 -1	3 - K 7
FB02-51-9MX8	7800 -1	3 - K 7
KA10-51-RS4	7800 -1	3 - K 7
FB02-51-7200	5170 -1	2 - H 4
FB01-52-111C	5320 -1	2 - C 5
FB01-52-111C	5320B -1	2 - D 5
FB01-52-211B	5320 -1	2 - C 5
FB01-52-211B	5320B -1	2 - D 5
F049-52-310N	5230 -1	2 - K 4
FB01-52-310H	5230 -1	2 - K 4
FB13-52-310J	5230 -1	2 - K 4
0866-52-398A	3700 -3	1 - G14
0866-52-398A	3700A -1	1 - H14
0866-52-398A	4370 -2	1 - E16
FB13-52-410E	5230 -1	2 - K 4
FB13-52-420E	5230 -1	2 - K 4
0866-52-451	5103 -1	2 - L 3
FB01-52-510D	5230 -1	2 - K 4
FB01-52-512	5230 -1	2 - K 4
FB01-52-514B	5230 -1	2 - K 4
FB67-52-514	5230 -1	2 - K 4
FB01-52-518	5230 -1	2 - K 4
FB01-52-519A	5230 -1	2 - K 4
FB67-52-610A	5260 -1	2 - L 4
FB67-52-710A	5260 -1	2 - L 4
FB67-52-720A	5260 -1	2 - L 4
FB67-52-750	5340AA-1	2 - H 5
FB67-52-760	5340AA-1	2 - H 5
9965-53-0005	3700 -1	1 - E14
9965-53-0010	3700 -1	1 - E14
9965-53-0015	3700 -1	1 - E14
9965-53-0020	3700 -1	1 - E14
FB67-53-021	5310A -1	2 - N 4
9965-53-0025	3700 -1	1 - E14
9965-53-0030	3700 -1	1 - E14
9965-53-0035	3700 -1	1 - E14
9965-53-0040	3700 -2	1 - F14
9965-53-0045	3700 -2	1 - F14
9965-53-0050	3700 -2	1 - F14
9965-53-0055	3700 -2	1 - F14
9965-53-0060	3700 -2	1 - F14
FB01-53-100N	5310 -1	2 - M 4
FB67-53-100C	5310A -1	2 - N 4
FB67-53-101	5310A -1	2 - N 4
FB67-53-102	5310A -1	2 - N 4
FB01-53-110A	5310 -1	2 - M 4
FB01-53-110A	5310A -1	2 - N 4
FB01-53-120C	5310 -1	2 - M 4
FB01-53-12XB	5310 -1	2 - M 4
FB67-53-12XC	5310A -1	2 - N 4
FB01-53-131A	5310 -1	2 - M 4
0187-53-134	6130 -1	2 - F14

PART NUMBER INDEX

PART NUMBER	SECTION	LOCATION
FB01-53-150D	5310 -1	2 - M 4
FB67-53-150	5310A -1	2 - N 4
FB01-53-160	5310 -1	2 - M 4
FB67-53-160	5310A -1	2 - N 4
FB01-53-170K	5310 -1	2 - M 4
FB67-53-170B	5310A -1	2 - N 4
FB01-53-172	5310 -1	2 - M 4
FB01-53-172	5310A -1	2 - N 4
FB01-53-180C	5310 -1	2 - M 4
FC66-53-180	5310A -1	2 - N 4
FB01-53-18XA	5310 -1	2 - M 4
FB01-53-18XA	5310A -1	2 - N 4
FB01-53-190	5310 -1	2 - M 4
FC01-53-190	5310A -1	2 - N 4
FB01-53-192	5310 -1	2 - M 4
FB01-53-192	5310A -1	2 - N 4
FB01-53-200D	5320 -1	2 - C 5
FB34-53-200D	5320 -1	2 - C 5
FB67-53-200C	5320B -1	2 - D 5
FB01-53-210K	5320 -1	2 - C 5
FB34-53-210D	5320 -1	2 - C 5
FB67-53-210C	5320B -1	2 - D 5
FB34-53-225	5320 -1	2 - C 5
FC66-53-240	5320B -1	2 - D 5
FC66-53-2[illegible]0C	5320 -1	2 - C 5
FB01-53-250A	5320 -1	2 - C 5
FB01-53-250A	5320B -1	2 - D 5
FB01-53-287A	5340A -1	2 - F 5
FB67-53-287	5340AA-1	2 - H 5
FB01-53 289	5340A -1	2 - F 5
FB01-53-289	5340AA-1	2 - H 5
FB67-53-310B	5320B -1	2 - D 5
FC01-53-310	5320 -1	2 - C 5
FB01-53-391A	5320 -1	2 - C 5
FB67-53-391A	5320B -1	2 - D 5
FB01-53-510C	5330 -1	2 - E 5
FB67-53-510C	5330 -1	2 - E 5
FB01-53-592B	5340A -1	2 - F 5
FB67-53-592	5340AA-1	2 - H 5
FB67-53-59XB	5320B -1	2 - D 5
FB01-53-600F	5370 -1	2 - L 5
FB02-53-600D	5370 -1	2 - L 5
FC33-53-600A	5370A -1	2 - M 5
FB67-53-603A	5370A -1	2 - M 5
FB67-53-606	5370A -1	2 - M 5
FB67-53-607A	5370A -1	2 - M 5
FB67-53-612A	5370A -1	2 - M 5
FB01-53-660	5370 -1	2 - L 5
FB67-53-660	5370A -1	2 - M 5
FB01-53-685	5370 -1	2 - L 5
FB01-53-685	5370A -1	2 - M 5
FB67-53-698	5340AA-1	2 - H 5
FB01-53-710F	5370A -1	2 - M 5
FC01-53-710A	5370 -1	2 - L 5
FB67-53 726A	5370A -2	2 - N 5
FB01-53-731B	5370 -1	2 - L 5
FB01-53-731B	5370A -1	2 - M 5
FB01-53-732	5370 -1	2 - L 5
FB01-53-732A	5370A -1	2 - M 5
FB01-53-745C	5370 -1	2 - L 5
FB67-53-74XA	5370A -1	2 - M 5
FB01-53-750B	5370 -1	2 - L 5
FB67-53-750A	5370A -1	2 - M 5
FB01-53-755	5370 -1	2 - L 5
FC33-53-75X	5370A -1	2 - M 5
FB01-53-760H	5370 -1	2 - L 5
FB67-53-760B	5370A -1	2 - M 5
0305-53-781A	5310 -1	2 - M 4
0305-53-781A	5310A -1	2 - N 4
FB01-53-790	5370 -1	2 - L 5
FB67-53-790	5370A -2	2 - N 5
FB01-53-796	5370 -1	2 - L 5
FB01-53-796	5370A -1	2 - M 5
FB01-53-810L	5370 -1	2 - L 5
FB67-53-810A	5370A -1	2 - M 5
FB67-53-81XA	5370A -1	2 - M 5
FB01-53-895B	5370 -1	2 - L 5
FB01-53-910C	5370A -1	2 - M 5
FB67-53-910E	5370A -1	2 - M 5
FC01-53-910	5370 -1	2 - L 5
FB67-53-917	5370A -1	2 - M 5
FB67-53-918	5370A -1	2 - M 5
FB01-53-920C	5370 -1	2 - L 5
FB67-53-920	5370A -1	2 - M 5
FB67-53-92X	5370A -1	2 - M 5
FB01-53-930J	5370A -1	2 - M 5
FC01-53-930A	5370 -1	2 - L 5
FB67-53-94X	5370A -1	2 - M 5
FB67-53-950	5370A -1	2 - M 5
FB01-53-951	5370 -1	2 - L 5
FB67 53-98XA	5370A -1	2 - M 5
FB67-54-021	5310A -1	2 - N 4
FB67-54-101	5310A -1	2 - N 4
FB67-54-102	5310A -1	2 - N 4
FB67-54-103	5310A -1	2 - N 4
FB01-54-110B	5310 -1	2 - M 4
FB01-54-110B	5310A -1	2 - N 4
FB01 54-120D	5310 -1	2 - M 4
FB01-54-12XE	5310 -1	2 - M 4
FB67-54 12XC	5310A -1	2 - N 4
FB01-54-131A	5310 -1	2 - M 4
FB01-54-190	5310A -1	2 - N 4
FC01-54-190	5310 -1	2 - M 4
FB01-54-192	5310 -1	2 - M 4
FB01-54-192	5310A -1	2 - N 4
F044-54-200	5320 -1	2 - C 5
FB01-54-200J	5320 -1	2 - C 5
FC33-54-200	5320B -1	2 - D 5
F044-54-210E	5320 -1	2 - C 5
FB01-54-210D	5320 -1	2 - C 5
FB67-54-210G	5320B -1	2 - D 5
F044-54-225	5320 -1	2 - C 5
FB01-54-240A	5320 -1	2 - C 5
FB01-54-240A	5320B -1	2 - D 5
FB01-54-250A	5320 -1	2 - C 5
FB01-54-250A	5320B -1	2 - D 5
FB01-54-287A	5340A -1	2 - F 5
FB67-54-287	5340AA-1	2 - H 5
FB01-54-289	5340A -1	2 - F 5
FB01-54-289	5340AA-1	2 - H 5
FB01-54-310J	5320 -1	2 - C 5
FB67-54-310B	5320B -1	2 - D 5
FB01-54-391A	5320 -1	2 - C 5
FB67-54-391A	5320B -1	2 - D 5
FB01-54-400H	5330 -1	2 - E 5
FB05-54-400H	5330 -1	2 - E 5
FB55-54-400D	5330 -1	2 - E 5
FB67-54-400E	5330 -1	2 - E 5
FB01-54-592B	5340A -1	2 - F 5
FB67-54-592	5340AA-1	2 - H 5
FB67-54-59XB	5320B -1	2 - D 5
FB67-54-603A	5370A -1	2 - M 5
FB67-54-606	5370A -1	2 - M 5
FB67-54-607A	5370A -1	2 - M 5
FB67-54-660	5370A -1	2 - M 5
FC01-54-660	5370 -1	2 - L 5
FB01-54-685	5370 -1	2 - L 5
FB01-54-685	5370A -1	2 - M 5
FB67-54-698	5340AA-2	2 - I 5
FB01-54-731B	5370 -1	2 - L 5
FB01-54-731B	5370A -1	2 - M 5
FB67-54-74XA	5370A -1	2 - M 5
FC01-54-74X	5370 -1	2 - L 5
FB01-54-750B	5370 -1	2 - L 5
FB67-54-750A	5370A -2	2 - N 5
FB67-54-75X	5370A -2	2 - N 5
FC01-54-75Y	5370 -1	2 - L 5
FB01-54-790	5370 -1	2 - L 5
FB67-54-790	5370A -2	2 - N 5
FB01-54-796	5370 -1	2 - L 5
FB01-54-796	5370A -2	2 - N 5
FB01-54-810M	5370 -1	2 - L 5
FB67-54-810	5370A -2	2 - N 5
FB67-54-81XA	5370A -2	2 - N 5
FB01-54-895R	5370 -1	2 - L 5
FB67-54-917	5370A -2	2 - N 5
FB67-54-94X	5370A -2	2 - N 5
FB01-54-950	5370 -1	2 - L 5
FB67-54-950	5370A -2	2 - N 5
FB01-55-210C	5500 -1	2 - G 6
FB01-55-210C	5500A -1	2 - I 6
FB05-55-210B	5500 -1	2 - G 6
FB05-55-210B	5500A -1	2 - I 6
FB05-55-210B	5500B -1	2 - J 6
FB01-55-216A	5560 -1	2 - F 7
B001-55-225A	557[illegible] -1	2 - I 7
B001-55-225A	6610 -1	2 - M15
FB01-55-225	5520 -1	2 - K 6
FA55-55-231D	6680 -3	2 - K16
FA55-55-231D00	6680 -3	2 - K16
FA56-55-231B	6680 -3	2 - K16
FA56-55-231B00	6680 -3	2 - K16
FA60-55-231A	6680 -3	2 - K16
FA60-55-231A00	6680 -3	2 - K16
B092-55-257	5500 -1	2 - G 6
B092-55-257	5500A -1	2 - I 6
B092-55-257	5500B -1	2 - J 6
B092-55-257	5560 -1	2 - F 7
1316-55-261	5540 -1	2 - M 6
1316-55-261	5540A -1	2 - C 7
8545-55-261	5540 -1	2 - M 6
8545-55-261	5540A -1	2 - C 7
8545-55-261	5540B -1	2 - E 7
8548-55-261	5540 -1	2 - M 6
8548-55-261	5540A -1	2 - C 7
8548-55-261	5540B -1	2 - E 7
G032-55-280A	5500 -1	2 - G 6
G032-55-280A	5500A -1	2 - I 6
G032-55-280A	5500B -1	2 - J 6
G032-55-280A	5570 -1	2 - I 7
8531-55-412	5570 -1	2 - I 7
FB01-55-420C	5520 -1	2 - K 6
FB01-55-422	5520 -1	2 - K 6
FB01-55-423	5520 -1	2 - K 6
FB01-55-424	5520 -1	2 - K 6
FB01-55-430B	5540 -1	2 - M 6
FB02-55-430B	5540 -1	2 - M 6
FB02-55-430B	5540A -1	2 - C 7
FB02-55-430B	5540B -1	2 - E 7
FB44-55-430	5540 -1	2 - M 6
FB44-55-430A	5540 -1	2 - M 6
FB56-55-430B	5540A -1	2 - C 7
FB60-55-430	5540A -1	2 - C 7
FB01-55-431	5500 -1	2 - G 6
FB01-55-431	5500A -1	2 - I 6
FB02-55-431	5500 -1	2 - G 6
FB02-55-431	5500A -1	2 - I 6
FB02-55-431	5500B -1	2 - J 6
FB01-55-433	5500 -1	2 - G 6
FB01-55-433	5500A -1	2 - I 6
FB01-55-433	5500B -1	2 - J 6
FB01-55-435A	5540 -1	2 - M 6
FB01-55-435A	5540A -1	2 - C 7
FB01-55-435A	5540B -1	2 - E 7
FB44-55-435	5540 -1	2 - M 6
FB44-55-435	5540A -1	2 - C 7
FB01-55-437	5540 -1	2 - M 6
FB01-55-437	5540A -1	2 - C 7
FB01-55-437	5540B -1	2 - E 7
FB01-55-441	5540 -1	2 - M 6
FB01-55-441	5540A -1	2 - C 7
FB01-55-441	5540B -1	2 - E 7
FB02-55-442	5540 -1	2 - M 6
FB02-55-442	5540A -1	2 - C 7
FB02-55-442	5540B -1	2 - E 7
FB56-55-442	5540A -1	2 - C 7
FB58-55-442	5540A -1	2 - C 7
FB01-55-444	5540 -1	2 - M 6
FB01-55-444	5540A -1	2 - C 7
FB01-55-444	5540B -1	2 - E 7
FB01-55-447A	5540 -1	2 - M 6
FB01-55-447A	5540A -1	2 - C 7
FB01-55-447A	5540B -1	2 - E 7
FB02-55-447	5500 -1	2 - G 6
FB02-55-447	5500A -1	2 - I 6
FB02-55-447B	5500 -1	2 - G 6
FB02-55-447B	5500A -1	2 - I 6
FB02-55-447B	5500B -1	2 - J 6
FB02-55-448	5500 -1	2 - G 6
FB02-55-448A	5500 -1	2 - G 6
FB04-55-448	5500 -1	2 - G 6
FB55-55-448A	5500A -1	2 - I 6
FB67-55-448A	5500B -1	2 - J 6
FB44-55-451	5540 -1	2 - M 6
FB44-55-451	5540A -1	2 - C 7
FB02-55-461	5540 -1	2 - M 6
FB02-55-461	5540A -1	2 - C 7
FB02-55-461	5540B -1	2 - E 7
FB01-55-471A	5540 -1	2 - M 6
FB01-55 471A	5540A -1	2 - C 7
FB01-55-471A	5540B -1	2 - E 7
FB44-55-471A	5540 -1	2 - M 6
FB44-55-471A	5540A -1	2 - C 7
FB01-55-481	5540 -1	2 - M 6
FB01-55-481	5540A -1	2 - C 7
FB01-55-481	5540B -1	2 - E 7
FB56-55-481	5540A -1	2 - C 7
FB01-55-488	5540 -1	2 - M 6
FB01-55-488	5540 -1	2 - M 6
FB01-55-488	5540A -1	2 - C 7
FB01-55-488	5540B -1	2 - E 7
FB01-55-489	5540 -1	2 - M 6
FB01-55-489	5540A -1	2 - C 7
FB01-55-489	5540B -1	2 - E 7
FB01-55-491	5540 -1	2 - M 6
FB01-55-491	5540A -1	2 - C 7
FB01-55-491	5540B -1	2 - E 7
FB02 55-710D	5500 -1	2 - G 6
FB02-55-710F	5500 -1	2 - G 6
FB04-55-710D	5500 -1	2 - G 6
FB04-55-710F	5500 -1	2 - G 6
FB55-55-710	5500A -1	2 - I 6
FB55-55-710B	5500A -1	2 - I 6
FB67-55 710A	5500B -1	2 - J 6
FB01-55-713	5500 -1	2 - G 6

PART NUMBER INDEX

PART NUMBER	SECTION	LOCATION
FB01-55-713	5500A -1	2 - I 6
FB01-55-713	5500B -1	2 - J 6
FB01-55-714	5500 -1	2 - G 6
FB01-55-714	5500A -1	2 - I 6
FB01-55-714	5500B -1	2 - J 6
FB01-55-715A	5500 -1	2 - G 6
FB01-55-715A	5500A -1	2 - I 6
FB01-55-715A07	5500 -1	2 - G 6
FB01-55-715A07	5500A -1	2 - I 6
FB01-55-715A10	5500 -1	2 - G 6
FB01-55-715A10	5500A -1	2 - I 6
FB01-55-715A48	5500 -1	2 - G 6
FB01-55-715A48	5500A -1	2 - I 6
F055-55-71XB	5500 -1	2 - G 6
F055-55-71XB	5500A -1	2 - I 6
F055-55-71XB	5500B -1	2 - J 6
F055-55-71XB07	5500 -1	2 - G 6
F055-55-71XB07	5500A -1	2 - I 6
F055-55-71XB07	5500B -1	2 - J 6
F055-55-71XB10	5500 -1	2 - G 6
F055-55-71XB10	5500A -1	2 - I 6
F055-55-71XB10	5500B -1	2 - J 6
F055-55-71XB48	5500 -1	2 - G 6
F055-55-71XB48	5500A -1	2 - I 6
F055-55-71XB48	5500B -1	2 - J 6
FB01-56-030	1850B -1	1 - J 8
1011-56-051	5390 -2	2 - D 6
1011-56-051	5390A -2	2 - F 6
B001-56-051	5390 -2	2 - D 6
FB67-56-051	5390A -2	2 - F 6
FB01-56-056	5390 -2	2 - D 6
FB01-56-056	5390A -2	2 - F 6
FB01-56-057	5390 -2	2 - D 6
FB01-56-057	5390A -2	2 - F 6
FB31-56-058	5390A -2	2 - F 6
FB01-56-111C	5390 -2	2 - D 6
FB01-56-111C	5390A -2	2 - F 6
FB43-56-112D	5390 -2	2 - D 6
FB67-56-130	5320B -1	2 - D 5
FC01-56-130	5320 -1	2 - C 5
8173-56-135	5320 -1	2 - C 5
8173-56-135	5320B -1	2 - D 5
FB67-56-140	5320B -1	2 - D 5
FC01-56-140	5320 -1	2 - C 5
FB01-56-172A	3700 -3	1 - G14
FB01-56-172A	3700A -2	1 - I14
FB01-56-176	3700 -3	1 - G14
FB01-56-176	3700A -2	1 - I14
G030-56-176	5530 -1	2 - L 6
FB01-56-177	3700 -3	1 - G14
FB01-56-177	3700A -1	1 - H14
FB01-56-181A	5320 -1	2 - C 5
FB01-56-181A	5320B -1	2 - D 5
FB01-56-182A	5320 -1	2 - C 5
FB01-56-182A	5320B -1	2 - D 5
FB01-56-191A	5390 -2	2 - D 6
FB01-56-191A	5390A -2	2 - F 6
FB01-56-192A	5390 -2	2 - D 6
FB01-56-192A	5390A -2	2 - F 6
FB01-56-19X	5390A -2	2 - F 6
FB01-56-19XA	5390 -2	2 - D 6
FB34-56-220A	5320 -1	2 - C 5
FB01-56-221A	5320 -1	2 - C 5
FB01-56-221A	5320B -1	2 - D 5
FB01-56-22X	5320 -1	2 - C 5
FB01-56-22X	5320B -1	2 - D 5
FB34-56-230A	5320 -1	2 - C 5
0243-56-231	1850B -1	1 - J 8
FB01-56-231A	5320 -1	2 - C 5
FB01-56-231A	5320B -1	2 - D 5
0118-56-241	5830 -1	2 - C12
0118-56-241	5830AA-1	2 - H12
0118-56-241	6130 -1	2 - F14
8477-56-241	5390 -2	2 - D 6
8477-56-241	5390A -2	2 - F 6
FB01-56-241	5390 -2	2 - D 6
FB01-56-241	5390A -2	2 - F 6
0118-56-242B	5390 -2	2 - D 6
0118-56-242B	5390A -2	2 - F 6
FB01-56-260C	5390 -2	2 - D 6
FB01-56-260C	5390A -2	2 - F 6
FB01-56-26X	5390 -2	2 - D 6
FB01-56-26X	5390A -2	2 - F 6
FB01-56-280C	5390 -2	2 - D 6
FB01-56-280C	5390A -2	2 - F 6
FB01-56-290	5390 -2	2 - D 6
FB01-56-290	5390A -2	2 - F 6
FB01-56-311	5320 -1	2 - C 5
FB01-56-313	5320 -1	2 - C 5
FB01-56-361A	5310 -1	2 - M 4
FB01-56-361A	5310A -1	2 - N 4
B001-56-376	5320 -1	2 - C 5
FB01-56-410B	5390 -2	2 - D 6
FB01-56-410B	5390A -2	2 - F 6
FB01-56-414	4370 -2	1 - E16
FB01-56-414	5390 -2	2 - D 6
FB01-56-414	5390A -2	2 - F 6
FB01-56-416	3900B -1	1 - J14
FB01-56-416	3900BA-1	1 - K14
FB01-56-416	5390 -2	2 - D 6
FB01-56-416	5390A -2	2 - F 6
FB01-56-420A	5390 -2	2 - D 6
FB01-56-420A	5390A -2	2 - F 6
FB01-56-430C	5390 -2	2 - D 6
FB01-56-430C	5390A -2	2 - F 6
FB01-56-450B	5390A -2	2 - F 6
FB01-56-450D	5390 -2	2 - D 6
FB01-56-460B	5390 -2	2 - D 6
FB01-56-460B	5390A -2	2 - F 6
FB01-56-470A	5390 -2	2 - D 6
FB01-56-470A	5390A -2	2 - F 6
FC11-56-510A	5390 -2	2 - D 6
FC11-56-521A	5390 -2	2 - D 6
FB01-56-620E	5230 -1	2 - K 4
FB02-56-620F	5230 -1	2 - K 4
FB13-56-620C	5230 -1	2 - K 4
FB15-56-620F	5230 -1	2 - K 4
0810-56-639	5390 -2	2 - D 6
0810-56-639	5390A -2	2 - F 6
FB01-56-651	5230 -1	2 - K 4
FB01-56-710C	5230 -1	2 - K 4
FB67-56-740	5230 -1	2 - K 4
FB67-56-74XA	5370A -2	2 - N 5
FB01-56-761	5340A -1	2 - F 5
FB67-56-76XB	5390A -2	2 - F 6
FB01-56-770A	5230 -1	2 - K 4
FB01-56-775B	5230 -1	2 - K 4
FB01-56-775B	6720 -2	3 - H 4
FB01-56-780D	5230 -1	2 - K 4
FB67-56-780	5370A -2	2 - N 5
FB01-56-786A	5230 -1	2 - K 4
FB01-56-787A	5230 -1	2 - K 4
FB01-56-78C	5230 -1	2 - K 4
UB39-56-799	6930 -1	3 - H 7
FB67-56-802	5260 -1	2 - L 4
FC01-56-811	5310 -1	2 - M 4
FC01-56-811	5310A -1	2 - N 4
FB01-56-812	5310 -1	2 - M 4
FB01-56-812	5310A -1	2 - N 4
FB01-56-81X	5310 -1	2 - M 4
FB01-56-81X	5310A -1	2 - N 4
FB67-56-820	5260 -1	2 - L 4
FB67-56-835	5260 -1	2 - L 4
FB67-56-840	5260 -1	2 - L 4
FB01-56-850B	6230 -1	2 - L14
FB02-56-850E	6230 -1	2 - L14
8BF1-56-860	5260 -1	2 - L 4
G031-56-860A	6230 -1	2 - L14
8BF1-56-870	5260 -1	2 - L 4
FB01-56-870B	6230 -1	2 - L14
FB01-56-880B	6230 -1	2 - L14
FB01-56-890	4200 -1	1 - G15
FB67-56-890	5340AA-1	2 - H 5
G030-56-890B	4200 -1	1 - G15
B130-56-897	5230 -1	2 - K 4
FB67-56-904	0900A -1	2 - C 3
0820-56-905	5000 -1	2 - E 3
FB01-56-920	5390 -2	2 - D 6
FB01-56-920	5390A -2	2 - F 6
FB67-56-920D	5260 -1	2 - L 4
FB67-56-926	5390A -2	2 - F 6
FB67-56-930D	5260 -1	2 - L 4
FB67-56-930D	6230 -1	2 - L14
FB01-56-940	5390 -2	2 - D 6
FB01-56-940	5390A -2	2 - F 6
FB01-56-944	5390 -2	2 - D 6
FB01-56-944	5390A -2	2 - F 6
FB67-56-952	5260 -1	2 - L 4
FB67-56-960A	3700 -3	1 - G14
FB01-56-961B	3700 -3	1 - G14
FB02-56-961A	3700 -3	1 - G14
FB03-56-961B	3700A -2	1 - I14
FB01-56-963	5310 -1	2 - M 4
FB01-56-963	5310A -1	2 - N 4
FB01-56-964	5310 -1	2 - M 4
FB01-56-964	5310A -1	2 - N 4
0866-56-971	5390 -2	2 - D 6
0866-56-971	5390A -2	2 - F 6
FB01-56-971	3700 -3	1 - G14
FB01-56-971	3700A -2	1 - I14
FB67-56-971	3700 -3	1 - G14
FB01-56-981D	1850B -1	1 - J 8
FB01-56-990A	5390 -2	2 - D 6
FB01-56-990A	5390A -2	2 - F 6
FB01-56-99XC	5390 -2	2 - D 6
FB01-56-99XC	5390A -2	2 - F 6
UB40-57-05X	5700A -3	2 - E 8
UB40-57-05X	5700AA-6	2 - H 9
UB40-57-05X	5700AB-2	2 - D10
UB40-57-05X	5700AC-3	2 - H10
FB02-57-100B	5700A -3	2 - E 8
FB02-57-100B07	5700A -3	2 - E 8
FB02-57-100B10	5700A -3	2 - E 8
FB02-57-100B48	5700A -3	2 - E 8
FB03-57-100B	5700A -3	2 - E 8
FB03-57-100B07	5700A -3	2 - E 8
FB03-57-100B10	5700A -3	2 - E 8
FB03-57-100B48	5700A -3	2 - E 8
FB04-57-100B	5700A -3	2 - E 8
FB04-57-100B07	5700A -3	2 - E 8
FB04-57-100B10	5700A -3	2 - E 8
FB04-57-100B48	5700A -3	2 - E 8
FB08-57-100B	5700A -3	2 - E 8
FB08-57-100B07	5700A -3	2 - E 8
FB08-57-100B10	5700A -3	2 - E 8
FB08-57-100B48	5700A -3	2 - E 8
FB44-57-100A	5700A -3	2 - E 8
FB44-57-100A07	5700A -3	2 - E 8
FB44-57-100A10	5700A -3	2 - E 8
FB44-57-100A48	5700A -3	2 - E 8
FB46-57-100	5700AA-6	2 - H 9
FB46-57-100 09	5700AA-6	2 - H 9
FB46-57-100 13	5700AA-6	2 - H 9
FB46-57-100 49	5700AA-6	2 - H 9
FB60-57-100	5700AA-6	2 - H 9
FB60-57-100 07	5700AA-6	2 - H 9
FB60-57-100 10	5700AA-6	2 - H 9
FB60-57-100 48	5700AA-6	2 - H 9
FB61-57-100	5700AA-6	2 - H 9
FB61-57-100 07	5700AA-6	2 - H 9
FB61-57-100 10	5700AA-6	2 - H 9
FB61-57-100 48	5700AA-6	2 - H 9
FB67-57-100	5700AB-2	2 - D10
FB67-57-100 07	5700AB-2	2 - D10
FB67-57-100 48	5700AB-2	2 - D10
FB69-57-100	5700AC-3	2 - H10
FB69-57-100 07	5700AC-3	2 - H10
FB69-57-100 48	5700AC-3	2 - H10
0259-57-109	5700A -3	2 - E 8
0259-57-109	5700AA-6	2 - H 9
0259-57-109	5700AB-2	2 - D10
2155-57-109	5700AC-3	2 - H10
FB02-57-150B	5700A -3	2 - E 8
FB02-57-150B07	5700A -3	2 - E 8
FB02-57-150B10	5700A -3	2 - E 8
FB02-57-150B48	5700A -3	2 - E 8
FB03-57-150B	5700A -3	2 - E 8
FB03-57-150B07	5700A -3	2 - E 8
FB03-57-150B10	5700A -3	2 - E 8
FB03-57-150B48	5700A -3	2 - E 8
FB44-57-150A	5700A -3	2 - E 8
FB44-57-150A07	5700A -3	2 - E 8
FB44-57-150A10	5700A -3	2 - E 8
FB44-57-150A48	5700A -3	2 - E 8
FB60-57-150	5700AA-6	2 - H 9
FB60-57-150 07	5700AA-6	2 - H 9
FB60-57-150 10	5700AA-6	2 - H 9
FB60-57-150 48	5700AA-6	2 - H 9
FB67-57-150	5700AB-2	2 - D10
FB67-57-150 07	5700AB-2	2 - D10
FB67-57-150 48	5700AB-2	2 - D10
FB69-57-150	5700AC-3	2 - H10
FB69-57-150 07	5700AC-3	2 - H10
FB69-57-150 48	5700AC-3	2 - H10
FB09-57-200	5750A -2	2 - K10
FB09-57-200 07	5750A -2	2 - K10
FB09-57-200 10	5750A -2	2 - K10
FB09-57-200 48	5750A -2	2 - K10
FB38-57-200	5750A -2	2 - K10
FB38-57-200 07	5750A -2	2 - K10
FB38-57-200 10	5750A -2	2 - K10
FB38-57-200 48	5750A -2	2 - K10
FB41-57-200	5750AA-3	2 - E11
FB41-57-200 07	5750AA-3	2 - E11
FB41-57-200 10	5750AA-3	2 - E11
FB41-57-200 48	5750AA-3	2 - E11
FB09-57-250	5750A -2	2 - K10
FB09-57-250 07	5750A -2	2 - K10
FB09-57-250 10	5750A -2	2 - K10
FB09-57-250 48	5750A -2	2 - K10
FB38-57-250	5750A -2	2 - K10
FB38-57-250 07	5750A -2	2 - K10
FB38-57-250 10	5750A -2	2 - K10
FB38-57-250 48	5750A -2	2 - K10
FB41-57-25Y	5750AA-3	2 - E11

PART NUMBER INDEX

PART NUMBER	SECTION	LOCATION
FB41-57-25Y 07	5750AA-3	2 - E11
FB41-57-25Y 10	5750AA-3	2 - E11
FB41-57-25Y 48	5750AA-3	2 - E11
FB10-57-311	5700AA-6	2 - H 9
FB10-57-311 07	5700AA-6	2 - H 9
FB10-57-311 10	5700AA-6	2 - H 9
FB10-57-311 48	5700AA-6	2 - H 9
FB10-57-312	5700AA-6	2 - H 9
FB10-57-312 07	5700AA-6	2 - H 9
FB10-57-312 10	5700AA-6	2 - H 9
FB10-57-312 48	5700AA-6	2 - H 9
FB10-57-313	5700AA-6	2 - H 9
FB10-57-313 07	5700AA-6	2 - H 9
FB10-57-313 10	5700AA-6	2 - H 9
FB10-57-313 48	5700AA-6	2 - H 9
FB10-57-314	5700AA-6	2 - H 9
FB10-57-314 07	5700AA-6	2 - H 9
FB10-57-314 10	5700AA-6	2 - H 9
FB10-57-314 48	5700AA-6	2 - H 9
FB10-57-315	5700AA-6	2 - H 9
FB10-57-315 07	5700AA-6	2 - H 9
FB10-57-315 10	5700AA-6	2 - H 9
FB10-57-315 48	5700AA-6	2 - H 9
FB10-57-316	5700AA-7	2 - I 9
FB10-57-316 07	5700AA-7	2 - I 9
FB10-57-316 10	5700AA-7	2 - I 9
FB10-57-316 48	5700AA-7	2 - I 9
FB10-57-318	5700AA-7	2 - I 9
FB10-57-318 07	5700AA-7	2 - I 9
FB10-57-318 10	5700AA-7	2 - I 9
FB10-57-318 48	5700AA-7	2 - I 9
FB10-57-319	5700AA-7	2 - I 9
FB10-57-319 07	5700AA-7	2 - I 9
FB10-57-319 10	5700AA-7	2 - I 9
FB10-57-319 48	5700AA-7	2 - I 9
FB10-57-320	5700AA-7	2 - I 9
FB10-57-320 07	5700AA-7	2 - I 9
FB10-57-320 10	5700AA-7	2 - I 9
FB10-57-320 48	5700AA-7	2 - I 9
FB10-57-321	5700AA-7	2 - I 9
FB10-57-321 07	5700AA-7	2 - I 9
FB10-57-321 10	5700AA-7	2 - I 9
FB10-57-321 48	5700AA-7	2 - I 9
FB10-57-322	5700AA-7	2 - I 9
FB10-57-322 07	5700AA-7	2 - I 9
FB10-57-322 10	5700AA-7	2 - I 9
FB10-57-322 48	5700AA-7	2 - I 9
FB10-57-323	5700AA-7	2 - I 9
FB10-57-323 07	5700AA-7	2 - I 9
FB10-57-323 10	5700AA-7	2 - I 9
FB10-57-323 48	5700AA-7	2 - I 9
FB10-57-351	5700AA-7	2 - I 9
FB10-57-351 07	5700AA-7	2 - I 9
FB10-57-351 10	5700AA-7	2 - I 9
FB10-57-351 48	5700AA-7	2 - I 9
FB10-57-352	5700AA-7	2 - I 9
FB10-57-352 07	5700AA-7	2 - I 9
FB10-57-352 10	5700AA-7	2 - I 9
FB10-57-352 48	5700AA-7	2 - I 9
FB10-57-353	5700AA-7	2 - I 9
FB10-57-353 07	5700AA-8	2 - J 9
FB10-57-353 10	5700AA-8	2 - J 9
FB10-57-353 48	5700AA-8	2 - J 9
FB10-57-354	5700AA-8	2 - J 9
FB10-57-354 07	5700AA-8	2 - J 9
FB10-57-354 10	5700AA-8	2 - J 9
FB10-57-354 48	5700AA-8	2 - J 9
FB10-57-355	5700AA-8	2 - J 9
FB10-57-355 07	5700AA-8	2 - J 9
FB10-57-355 10	5700AA-8	2 - J 9
FB10-57-355 48	5700AA-8	2 - J 9
FB10-57-356	5700AA-8	2 - J 9
FB10-57-356 07	5700AA-8	2 - J 9
FB10-57-356 10	5700AA-8	2 - J 9
FB10-57-356 48	5700AA-8	2 - J 9
FB10-57-357	5700AA-8	2 - J 9
FB10-57-357 07	5700AA-8	2 - J 9
FB10-57-357 10	5700AA-8	2 - J 9
FB10-57-357 48	5700AA-8	2 - J 9
FB10-57-358	5700AA-8	2 - J 9
FB10-57-358 07	5700AA-8	2 - J 9
FB10-57-358 10	5700AA-8	2 - J 9
FB10-57-358 48	5700AA-8	2 - J 9
FB10-57-359	5700AA-8	2 - J 9
FB10-57-359 07	5700AA-8	2 - J 9
FB10-57-359 10	5700AA-8	2 - J 9
FB10-57-359 48	5700AA-8	2 - J 9
FB10-57-360	5700AA-8	2 - J 9
FB10-57-360 07	5700AA-8	2 - J 9
FB10-57-360 10	5700AA-8	2 - J 9
FB10-57-360 48	5700AA-8	2 - J 9
FB10-57-361	5700AA-8	2 - J 9
FB10-57-361 07	5700AA-8	2 - J 9
FB10-57-361 10	5700AA-8	2 - J 9
FB10-57-361 48	5700AA-8	2 - J 9
FB10-57-391	5700AA-8	2 - J 9
FB10-57-391 07	5700AA-8	2 - J 9
FB10-57-391 10	5700AA-9	2 - K 9
FB10-57-391 48	5700AA-9	2 - K 9
FB10-57-392	5700AA-9	2 - K 9
FB10-57-392 07	5700AA-9	2 - K 9
FB10-57-392 10	5700AA-9	2 - K 9
FB10-57-392 48	5700AA-9	2 - K 9
FB10-57-393	5700AA-9	2 - K 9
FB10-57-393 07	5700AA-9	2 - K 9
FB10-57-393 10	5700AA-9	2 - K 9
FB10-57-393 48	5700AA-9	2 - K 9
FB10-57-510	5750A -2	2 - K10
FB10-57-510	5750AA-3	2 - E11
FB10-57-511	5750AA-3	2 - E11
FB10-57-511 07	5750AA-3	2 - E11
FB10-57-511 10	5750AA-3	2 - E11
FB10-57-511 48	5750AA-3	2 - E11
FB10-57-512	5750AA-3	2 - E11
FB10-57-512 07	5750AA-3	2 - E11
FB10-57-512 10	5750AA-3	2 - E11
FB10-57-512 48	5750AA-3	2 - E11
FB10-57-513	5750AA-3	2 - E11
FB10-57-513 07	5750AA-3	2 - E11
FB10-57-513 10	5750AA-3	2 - E11
FB10-57-513 48	5750AA-3	2 - E11
FB10-57-514	5750AA-3	2 - E11
FB10-57-514 07	5750AA-3	2 - E11
FB10-57-514 10	5750AA-3	2 - E11
FB10-57-514 48	5750AA-3	2 - E11
FB10-57-515	5750AA-3	2 - E11
FB10-57-515 07	5750AA-3	2 - E11
FB10-57-515 10	5750AA-3	2 - E11
FB10-57-515 48	5750AA-3	2 - E11
FB10-57-516	5750AA-3	2 - E11
FB10-57-516 07	5750AA-3	2 - E11
FB10-57-516 10	5750AA-3	2 - E11
FB10-57-516 48	5750AA-3	2 - E11
FB10-57-517	5750AA-3	2 - E11
FB10-57-517 07	5750AA-3	2 - E11
FB10-57-517 10	5750AA-3	2 - E11
FB10-57-517 48	5750AA-3	2 - E11
FB10-57-518	5750AA-3	2 - E11
FB10-57-518 07	5750AA-3	2 - E11
FB10-57-518 10	5750AA-3	2 - E11
FB10-57-518 48	5750AA-3	2 - E11
FB10-57-519	5750AA-4	2 - F11
FB10-57-519 07	5750AA-4	2 - F11
FB10-57-519 10	5750AA-4	2 - F11
FB10-57-519 48	5750AA-4	2 - F11
FB10-57-520	5750AA-4	2 - F11
FB10-57-520 07	5750AA-4	2 - F11
FB10-57-520 10	5750AA-4	2 - F11
FB10-57-520 48	5750AA-4	2 - F11
FB10-57-521	5750AA-4	2 - F11
FB10-57-521 07	5750AA-4	2 - F11
FB10-57-521 10	5750AA-4	2 - F11
FB10-57-521 48	5750AA-4	2 - F11
FB10-57-522	5750AA-4	2 - F11
FB10-57-522 07	5750AA-4	2 - F11
FB10-57-522 10	5750AA-4	2 - F11
FB10-57-522 48	5750AA-4	2 - F11
FB10-57-523	5750AA-4	2 - F11
FB10-57-523 07	5750AA-4	2 - F11
FB10-57-523 10	5750AA-4	2 - F11
FB10-57-523 48	5750AA-4	2 - F11
FB10-57-524	5750AA-4	2 - F11
FB10-57-524 07	5750AA-4	2 - F11
FB10-57-524 10	5750AA-4	2 - F11
FB10-57-524 48	5750AA-4	2 - F11
FB10-57-525	5750AA-4	2 - F11
FB10-57-525 07	5750AA-4	2 - F11
FB10-57-525 10	5750AA-4	2 - F11
FB10-57-525 48	5750AA-4	2 - F11
FB10-57-526	5750AA-4	2 - F11
FB10-57-526 07	5750AA-4	2 - F11
FB10-57-526 10	5750AA-4	2 - F11
FB10-57-526 48	5750AA-4	2 - F11
FB10-57-550	5750A -2	2 - K10
FB10-57-550	5750AA-4	2 - F11
FB10-57-560	5750A -2	2 - K10
FB10-57-560	5750AA-4	2 - F11
FB10-57-611	5750AA-4	2 - F11
FB10-57-611 07	5750AA-4	2 - F11
FB10-57-611 10	5750AA-4	2 - F11
FB10-57-611 48	5750AA-4	2 - F11
FB10-57-612	5750AA-4	2 - F11
FB10-57-612 07	5750AA-4	2 - F11
FB10-57-612 10	5750AA-4	2 - F11
FB10-57-612 48	5750AA-5	2 - G11
FB10-57-613	5750AA-5	2 - G11
FB10-57-613 07	5750AA-5	2 - G11
FB10-57-613 10	5750AA-5	2 - G11
FB10-57-613 48	5750AA-5	2 - G11
FB10-57-614	5750AA-5	2 - G11
FB10-57-614 07	5750AA-5	2 - G11
FB10-57-614 10	5750AA-5	2 - G11
FB10-57-614 48	5750AA-5	2 - G11
FB10-57-620C	5790A -1	2 - H11
FB10-57-620C07	5790A -1	2 - H11
FB10-57-620C10	5790A -1	2 - H11
FB10-57-620C48	5790A -1	2 - H11
FB10-57-630B	5790A -1	2 - H11
FB10-57-630B07	5790A -1	2 - H11
FB10-57-630B10	5790A -1	2 - H11
FB10-57-630B48	5790A -1	2 - H11
FB40-57-630A	5790A -1	2 - H11
FB40-57-630A07	5790A -1	2 - H11
FB40-57-630A10	5790A -1	2 - H11
FB40-57-630A48	5790A -1	2 - H11
FB67-57-630B	5790A -1	2 - H11
FB67-57-630B07	5790A -1	2 - H11
FB67-57-630B48	5790A -1	2 - H11
FB67-57-631	5790A -1	2 - H11
FB67-57-631 07	5790A -1	2 - H11
FB67-57-631 48	5790A -1	2 - H11
FB10-57-680A	5790A -1	2 - H11
FB10-57-680A07	5790A -1	2 - H11
FB10-57-680A10	5790A -1	2 - H11
FB10-57-680A48	5790A -1	2 - H11
FB05-57-690C	5790A -1	2 - H11
FB05-57-690C07	5790A -1	2 - H11
FB05-57-690C10	5790A -1	2 - H11
FB05-57-690C48	5790A -1	2 - H11
FB40-57-690A	5790A -1	2 - H11
FB40-57-690A07	5790A -1	2 - H11
FB40-57-690A10	5790A -1	2 - H11
FB40-57-690A48	5790A -1	2 - H11
FB67-57-690B	5790A -1	2 - H11
FB67-57-690B07	5790A -1	2 - H11
FB67-57-690B48	5790A -1	2 - H11
FB10-57-710	5790A -1	2 - H11
FB10-57-710 07	5790A -1	2 - H11
FB10-57-710 10	5790A -1	2 - H11
FB10-57-710 48	5790A -1	2 - H11
FB10-57-720	5790A -2	2 - I11
FB10-57-720 07	5790A -2	2 - I11
FB10-57-720 10	5790A -2	2 - I11
FB10-57-720 48	5790A -2	2 - I11
B120-57-985	5790A -1	2 - H11
FB05-58-020H	5800A -1	2 - J11
FB67-58-020L	5800AA-1	2 - K11
FB01-58-031D	5800A -1	2 - J11
FB67-58-031C	5800AA-1	2 - K11
B092-58-201	5800AA-1	2 - K11
B092-58-201A	5800A -1	2 - J11
FB01-58-210	5800A -1	2 - J11
FB01-58-210	5800AA-1	2 - K11
B092-58-240	5800A -1	2 - J11
B092-58-240	5800AA-1	2 - K11
H260-58-265C	5830A -1	2 - C12
H260-58-265C	5830AA-1	2 - H12
FB01-58-270B	5830A -1	2 - C12
FB01-58-270B	5830AA-1	2 - H12
FB01-58-303B	5830A -1	2 - C12
FB01-58-303B	5830AA-1	2 - H12
FB01-58-303B07	5830A -1	2 - C12
FB01-58-303B07	5830AA-1	2 - H12
FB01-58-303B10	5830A -1	2 - C12
FB01-58-303B10	5830AA-1	2 - H12
FB01-58-303B48	5830A -1	2 - C12
FB01-58-303B48	5830AA-1	2 - H12
FB01-58-309A	5830A -1	2 - C12
FB01-58-309A	5830AA-1	2 - H12
FB02-58-309	5830A -1	2 - C12
FB02-58-309	5830AA-1	2 - H12
FB05-58-310A	5830A -1	2 - C12
FB05-58-310A	5830AA-1	2 - H12
G030-58-315	0900A -1	2 - C 3
G030-58-315	5830A -1	2 - C12
G030-58-315	5830AA-1	2 - H12
H001-58-315	5830A -1	2 - C12
H001-58-315	5830AA-1	2 - H12
H001-58-315	6230 -1	2 - L14
FB01-58-316B	5830A -4	2 - F12
FB01-58-316B07	5830A -4	2 - F12
FB01-58-316B10	5830A -4	2 - F12
FB01-58-316B48	5830A -4	2 - F12
FB02-58-316A	5830A -4	2 - F12
FB02-58-316A	5830AA-2	2 - I12

PART NUMBER INDEX

PART NUMBER	SECTION	LOCATION
FB02-58-316A07	5830A -4	2 - F12
FB02-58-316A07	5830AA-2	2 - I12
FB02-58-316A10	5830A -4	2 - F12
FB02-58-316A10	5830AA-2	2 - I12
FB02-58-316A48	5830A -4	2 - F12
FB02-58-316A48	5830AA-2	2 - I12
FB01-58-330B	5830A -1	2 - C12
FB01-58-330B07	5830A -1	2 - C12
FB01-58-330B10	5830A -1	2 - C12
FB01-58-330B48	5830A -1	2 - C12
FB02-58-330A	5830A -1	2 - C12
FB02-58-330A	5830AA-1	2 - H12
FB02-58-330A07	5830A -1	2 - C12
FB02-58-330A07	5830AA-1	2 - H12
FB02-58-330A10	5830A -1	2 - C12
FB02-58-330A10	5830AA-1	2 - H12
FB02-58-330A48	5830A -1	2 - C12
FB02-58-330A48	5830AA-1	2 - H12
FB01-58-335	5830A -1	2 - C12
FB01-58-335	5830AA-1	2 - H12
FB06-58-350A	5830A -1	2 - C12
B093-58-351	5830A -1	2 - C12
B092-58-355	5830A -4	2 - F12
B092-58-355	5830AA-2	2 - I12
B092-58-355	6230 -1	2 - L14
B001-58-361	5830A -4	2 - F12
B001-58-361A	5830AA-2	2 - I12
FB01-58-410B	5830A -2	2 - D12
FB01-58-410B1A	5830A -2	2 - D12
FB01-58-410B2H	5830A -2	2 - D12
FB01-58-410B3A	5830A -2	2 - D12
FB01-58-410B5A	5830A -2	2 - D12
FB01-58-410BJ5	5830A -2	2 - D12
FB01-58-410BK8	5830A -2	2 - D12
FB01-58-410BNP	5830A -2	2 - D12
FB01-58-410BPZ	5830A -2	2 - D12
FB01-58-410BRH	5830A -2	2 - D12
FB01-58-410BWU	5830A -2	2 - D12
FB01-58-410BWY	5830A -2	2 - D12
FB02-58-410B	5830A -2	2 - D12
FB02-58-410B	5830AA-1	2 - H12
FB02-58-410B1A	5830A -2	2 - D12
FB02-58-410B1A	5830AA-1	2 - H12
FB02-58-410B2H	5830A -2	2 - D12
FB02-58-410B2H	5830AA-1	2 - H12
FB02-58-410B3A	5830A -2	2 - D12
FB02-58-410B5A	5830A -2	2 - D12
FB02-58-410B5A	5830AA-1	2 - H12
FB02-58-410BJ5	5830A -2	2 - D12
FB02-58-410BJ5	5830AA-1	2 - H12
FB02-58-410BK8	5830A -2	2 - D12
FB02-58-410BK8	5830AA-1	2 - H12
FB02-58-410BNP	5830A -2	2 - D12
FB02-58-410BPZ	5830A -2	2 - D12
FB02-58-410BPZ	5830AA-1	2 - H12
FB02-58-410BRH	5830A -2	2 - D12
FB02-58-410BRH	5830AA-1	2 - H12
FB02-58-410BWU	5830A -2	2 - D12
FB02-58-410BWY	5830A -2	2 - D12
FB02-58-410BWY	5830AA-1	2 - H12
FB01-58-412	5830A -2	2 - D12
FB01-58-412	5830AA-1	2 - H12
FB01-58-495	5830A -4	2 - F12
FB01-58-495	5830AA-2	2 - I12
FB03-58-496	5830A -4	2 - F12
FB03-58-496	5830AA-2	2 - I12
FB05-58-496	5830A -4	2 - F12
FB05-58-496	5830AA-2	2 - I12
S084-58-502	5800A -1	2 - J11
B092-58-505	5830A -4	2 - F12
FB67-58-510C	5800AA-1	2 - K11
FB01-58-511	5800A -1	2 - J11
FB01-58-560E	5830A -4	2 - F12
FB05-58-560J	5830A -4	2 - F12
FB67-58-560B	5830AA-2	2 - I12
B092-58-580	5830A -1	2 - C12
B092-58-580	5830A -2	2 - D12
B092-58-580 07	5830A -2	2 - D12
B092-58-580 09	5830A -2	2 - D12
B092-58-580 10	5830A -2	2 - D12
B092-58-580 48	5830A -2	2 - D12
FB05-58-581	5830A -4	2 - F12
B001-58-582A	5830A -2	2 - D12
B001-58-582A07	5830A -2	2 - D12
B001-58-582A10	5830A -2	2 - D12
B001-58-582A48	5830A -2	2 - D12
FB05-58-583A	5830A -4	2 - F12
B094-58-584	5830A -4	2 - F12
B001-58-585	5830A -4	2 - F12
FB05-58-58X	5830A -4	2 - F12
FB05-58-590B	5830A -4	2 - F12
FB05-58-592	5830A -4	2 - F12
B094-58-593	5830A -5	2 - G12
B094-58-595	5830A -5	2 - G12
FB05-58-596	5830A -4	2 - F12
FB05-58-597	5830A -4	2 - F12
FB01-58-603A	5800A -1	2 - J11
FB01-58-604A	5800A -1	2 - J11
FB01-58-606A	5800A -1	2 - J11
FB01-58-60XD	5800A -1	2 - J11
0259-58-612	6845 -1	3 - K 5
FB67-58-61XB	5800AA-1	2 - K11
FB67-58-651	5800AA-1	2 - K11
FB67-58-661B	5800AA-1	2 - K11
FB67-58-6A0A	5800AA-1	2 - K11
FB01-58-760C	5800A -1	2 - J11
FB67-58-760B	5800AA-1	2 - K11
B092-58-762	5800A -1	2 - J11
FB02 58-762A	5800A -1	2 - J11
FB02-58-762A	5800AA-1	2 - K11
G031-58-762	5800A -1	2 - J11
G031-58-762	5800AA-1	2 - K11
FB67-58-770B	5800AA-1	2 - K11
FB01-58-810	5840A -1	2 - C13
FB67-58-810C	5840AB-1	2 - K13
FB67-58-810D	5840AB-1	2 - K13
FB01-58-815	5840A -1	2 - C13
FB01-58-815	5840AB-1	2 - K13
FB01-58-821	5840A -1	2 - C13
FB67-58-821	5840AB-1	2 - K13
FB01-58-831E	5800A -1	2 - J11
B092-58-863A	5830A -4	2 - F12
FB67-58-865	5340AA-1	2 - H 5
FB68-58-865	5340AA-1	2 - H 5
0559-58-868	4360 -1	1 - N15
0559-58-868	5105 -1	2 - M 3
G067-58-873	5830A -5	2 - G12
G067-58-873	5830AA-2	2 - I12
FB01-58-876	5830A -5	2 - G12
FB01-58-876	5830AA-2	2 - I12
FB67-58-877B	5800AA-1	2 - K11
FB67-58-879	5800AA-1	2 - K11
FB67-58-910	5800AA-1	2 - K11
H272-58-911	5830AA-2	2 - I12
0187-58-922	5840A -7	2 - I13
0187-58-922	5840AB-3	2 - M13
0187-58-922	6865A -1	3 - G 6
0187-58-922	6865AA-1	3 - H 6
9965-59-0005	3700 -2	1 - F14
9965-59-0005	3700A -1	1 - H14
9965-59-0010	3700 -2	1 - F14
9965-59-0010	3700A -1	1 - H14
9965-59-0015	3700 -2	1 - F14
9965-59-0015	3700A -1	1 - H14
9965-59-0020	3700 -2	1 - F14
9965-59-0020	3700A -1	1 - H14
FB05-59-020H	5800A -1	2 - J11
FB67-59-020K	5800AA-1	2 - K11
9965-59-0025	3700 -2	1 - F14
9965-59-0025	3700A -1	1 - H14
9965-59-0030	3700 -2	1 - F14
9965-59-0030	3700A -1	1 - H14
FB01-59-031D	5800A -1	2 - J11
FB67-59-031C	5800AA-1	2 - K11
9965-59-0035	3700 -2	1 - F14
9965-59-0035	3700A -1	1 - H14
9965-59-0040	3700 -2	1 - F14
9965-59-0040	3700A -1	1 - H14
9965-59-0045	3700 -2	1 - F14
9965-59-0045	3700A -1	1 - H14
9965-59-0050	3700 -2	1 - F14
9965-59-0050	3700A -1	1 - H14
9965-59-0055	3700 -2	1 - F14
9965-59-0055	3700A -1	1 - H14
9965-59-0060	3700 -2	1 - F14
9965-59-0060	3700A -1	1 - H14
FB01-59-210	5800A -1	2 - J11
FB01-59-210	5800AA-1	2 - K11
B092-59-240	5800A -1	2 - J11
B092-59-240	5800AA-1	2 - K11
FB01-59-303B	5830A -1	2 - C12
FB01-59-303B	5830AA-1	2 - H12
FB01-59-303B07	5830A -1	2 - C12
FB01-59-303B07	5830AA-1	2 - H12
FB01-59-303B10	5830A -1	2 - C12
FB01-59-303B10	5830AA-1	2 - H12
FB01-59-303B48	5830A -1	2 - C12
FB01-59-303B48	5830AA-1	2 - H12
FB05-59-310A	5830A -1	2 - C12
FB05-59-310A	5830AA-1	2 - H12
G030-59-315	0900A -1	2 - C 3
G030-59-315	5260 -1	2 - L 4
G030-59-315	5830A -5	2 - G12
G030-59-315	5830AA-2	2 - I12
FB01-59-316B	5830A -4	2 - F12
FB01-59-316B07	5830A -4	2 - F12
FB01-59-316B10	5830A -4	2 - F12
FB01-59-316B48	5830A -4	2 - F12
FB02-59-316A	5830A -4	2 - F12
FB02-59-316A	5830AA-2	2 - I12
FB02-59-316A07	5830A -4	2 - F12
FB02-59-316A07	5830AA-2	2 - I12
FB02-59-316A10	5830A -4	2 - F12
FB02-59-316A10	5830AA-2	2 - I12
FB02-59-316A48	5830A -5	2 - G12
FB02-59-316A48	5830AA-2	2 - I12
FB01-59-330B	5830A -1	2 - C12
FB01-59-330B07	5830A -1	2 - C12
FB01-59-330B10	5830A -1	2 - C12
FB01-59-330B48	5830A -1	2 - C12
FB02-59-330A	5830A -1	2 - C12
FB02-59-330A	5830AA-1	2 - H12
FB02-59-330A07	5830A -1	2 - C12
FB02-59-330A07	5830AA-1	2 - H12
FB02-59-330A10	5830A -1	2 - C12
FB02-59-330A10	5830AA-1	2 - H12
FB02-59-330A48	5830A -1	2 - C12
FB02-59-330A48	5830AA-1	2 - H12
B001-59-335	5830A -1	2 - C12
B001-59-335	5830AA-1	2 - H12
FB01-59-410B	5830A -2	2 - D12
FB01-59-410B1A	5830A -3	2 - E12
FB01-59-410B2H	5830A -3	2 - E12
FB01-59-410B3A	5830A -3	2 - E12
FB01-59-410B5A	5830A -3	2 - E12
FB01-59-410BJ5	5830A -2	2 - D12
FB01-59-410BK8	5830A -2	2 - D12
FB01-59-410BNP	5830A -2	2 - D12
FB01-59-410BPZ	5830A -2	2 - D12
FB01-59-410BRH	5830A -2	2 - D12
FB01-59-410BWU	5830A -3	2 - E12
FB01-59-410BWY	5830A -3	2 - E12
FB02-59-410B	5830A -3	2 - E12
FB02-59-410B1A	5830A -3	2 - E12
FB02-59-410B2H	5830A -3	2 - E12
FB02-59-410B3A	5830A -3	2 - E12
FB02-59-410B5A	5830A -3	2 - E12
FB02-59-410BJ5	5830A -3	2 - E12
FB02-59-410BK8	5830A -3	2 - E12
FB02-59-410BNP	5830A -3	2 - E12
FB02-59-410BPZ	5830A -3	2 - E12
FB02-59-410BRH	5830A -3	2 - E12
FB02-59-410BWU	5830A -3	2 - E12
FB02-59-410BWY	5830A -3	2 - E12
FB05-59-410C	5830A -3	2 - E12
FB05-59-410C1A	5830A -3	2 - E12
FB05-59-410C3A	5830A -3	2 - E12
FB05-59-410C5A	5830A -3	2 - E12
FB05-59-410CJ5	5830A -3	2 - E12
FB05-59-410CK8	5830A -3	2 - E12
FB05-59-410CNP	5830A -3	2 - E12
FB05-59-410CPZ	5830A -3	2 - E12
FB05-59-410CRH	5830A -3	2 - E12
FB05-59-410CWU	5830A -3	2 - E12
FB05-59-410CWY	5830A -3	2 - E12
FB06-59-410C	5830A -3	2 - E12
FB06-59-410C	5830AA-1	2 - H12
FB06-59-410C1A	5830A -3	2 - E12
FB06-59-410C1A	5830AA-2	2 - I12
FB06-59-410C2H	5830AA-2	2 - I12
FB06-59-410C3A	5830A -3	2 - E12
FB06-59-410C5A	5830A -4	2 - F12
FB06-59-410C5A	5830AA-2	2 - I12
FB06-59-410CJ5	5830A -3	2 - E12
FB06-59-410CJ5	5830AA-1	2 - H12
FB06-59-410CK8	5830A -3	2 - E12
FB06-59-410CK8	5830AA-2	2 - I12
FB06-59-410CNP	5830A -3	2 - E12
FB06-59-410CPZ	5830A -3	2 - E12
FB06-59-410CPZ	5830AA-2	2 - I12
FB06-59-410CRH	5830A -3	2 - E12
FB06-59-410CRH	5830AA-2	2 - I12
FB06-59-410CWU	5830A -3	2 - E12
FB06-59-410CWY	5830A -3	2 - E12
FB06-59-410CWY	5830AA-2	2 - I12
FB03-59-496	5830A -4	2 - F12
FB03-59-496	5830AA-2	2 - I12
FB06-59-496	5830A -5	2 - G12
FB06-59-496	5830AA-2	2 - I12
FB67-59-510C	5800AA-1	2 - K11
FB67-59-510C48	5800AA-1	2 - K11
FB01-59-511	5800A -1	2 - J11
FB01-59-560E	5830A -4	2 - F12
FB05-59-560J	5830A -4	2 - F12
FB67-59-560B	5830AA-2	2 - I12

PART NUMBER INDEX

PART NUMBER	SECTION	LOCATION
FB05-59-583A	5830A -5	2 - G12
FB05-59-58X	5830A -4	2 - F12
FB05-59-590B	5830A -4	2 - F12
FB01-59-603A	5800A -1	2 - J11
FB01-59-604A	5800A -1	2 - J11
FB01-59-60XD	5800A -1	2 - J11
FB67-59-61XB	5800AA-1	2 - K11
FB67-59-651	5800AA-1	2 - K11
FB67-59-661B	5800AA-1	2 - K11
FB67-59-6A0A	5800AA-1	2 - K11
FB01-59-760C	5800A -1	2 - J11
FB67-59-760B	5800AA-1	2 - K11
FB02-59-762A	5800A -1	2 - J11
FB02-59-762A	5800AA-1	2 - K11
FB67-59-770F	5800AA-1	2 - K11
FB01-59-810	5840A -1	2 - C13
FB67-59-810D	5840AB-1	2 - K13
FB01-59-821	5840A -1	2 - C13
FB67-59-821	5840AB-1	2 - K13
FB01-59-831E	5800A -1	2 - J11
FB67-59-865	5340AA-1	2 - H 5
FB68-59-865	5340AA-1	2 - H 5
FB67-59-877B	5800AA-1	2 - K11
FB01-60-070A	5530 -1	2 - L 6
FB02-60-070A	5530 -1	2 - L 6
FB67-60-070	5530 -1	2 - L 6
UB40-60-071	4160 -1	1 - F15
UB40-60-071	5530 -1	2 - L 6
9963-60-111	3700 -1	1 - E14
FB01-60-121B	6100 -1	2 - N13
W023-60-122	7800 -1	3 - K 7
FB01-60-141B	6100 -1	2 - N13
FB01-60-161A	5580 -1	2 - K 7
FB01-60-161A07	5580 -1	2 - K 7
FB01-60-161A10	5580 -1	2 - K 7
FB01-60-161A48	5580 -1	2 - K 7
FB01-60-171A	5580 -1	2 - K 7
FB01-60-171A07	5580 -1	2 - K 7
FB01-60-171A10	5580 -1	2 - K 7
FB01-60-171A48	5580 -1	2 - K 7
FB01-60-181	5580 -1	2 - K 7
FB01 60-191	5580 -1	2 - K 7
FB01-60-221	5500A -1	2 - I 6
FB01-60-221	5500B -1	2 - J 6
FB01-60-221A	5500 -1	2 - G 6
FB01-60-230	5500 -1	2 - G 6
FB01-60-230	5500A -1	2 - I 6
FB01-60-230A	5500B -1	2 - J 6
FB01-60-232	5500 -1	2 - G 6
FB01-60-232	5500A -1	2 - I 6
FB01-60-232	5500B -1	2 - J 6
FB01-60-233	5500 -2	2 - H 6
FB01-60-233	5500A -1	2 - I 6
FB01-60-233	5500B -1	2 - J 6
FB01-60-261	5500 -2	2 - H 6
FB01-60-261	5500B -1	2 - J 6
FB01-60-261A	5500A -1	2 - I 6
G001-60-261	5500 -2	2 - H 6
G001-60-261	5500A -1	2 - I 6
FB01-60-350E	5560 -1	2 - F 7
B092-60-408	5560 -1	2 - F 7
9963-60-413	3700 -1	1 - E14
9963-60-413	3700A -1	1 - H14
FB01-60-420G	5560 -1	2 - F 7
FB67-60-420C	5560 -1	2 - F 7
FB01-60-520B	5560 -1	2 - F 7
9923-60-571	1100B -1	1 - I 3
FB01-60-634	5560 -1	2 - F 7
FB01-60-634A	5560 -1	2 - F 7
FB01-60-635	5560 -1	2 - F 7
FB01-60-720A	5560 -1	2 - F 7
FB01-60-720A07	5560 -1	2 - F 7
FB01-60-720A10	5560 -1	2 - F 7
FB01-60-720A48	5560 -1	2 - F 7
FB01-60-728A	5560 -1	2 - F 7
FB01-60-731A	5560 -1	2 - F 7
FB01-60-731A07	5560 -1	2 - F 7
FB01-60-731A10	5560 -1	2 - F 7
FB01-60-731A48	5560 -1	2 - F 7
FB01-60-732A	5560 -1	2 - F 7
FB01-60-732A07	5560 -2	2 - G 7
FB01-60-732A10	5560 -2	2 - G 7
FB01-60-732A48	5560 -2	2 - G 7
FB01-60-733	5560 -2	2 - G 7
FB01-60-734A	5560 -2	2 - G 7
FB01-60-735	5560 -2	2 - G 7
FB01-60-736	5560 -2	2 - G 7
FB01-60-785A	5560 -2	2 - G 7
FB01-60-785A07	5560 -2	2 - G 7
FB01-60-785A10	5560 -2	2 - G 7
FB01-60-785A48	5560 -2	2 - G 7
FB01-60-786A	5560 -2	2 - G 7
FB01-60-795A	5560 -2	2 - G 7
FB01-60-795A07	5560 -2	2 - G 7
FB01-60-795A10	5560 -2	2 - G 7
FB01-60-795A48	5560 -2	2 - G 7
FB01-60-821	5560 -1	2 - F 7
FB01-60-821 07	5560 -1	2 - F 7
FB01-60-821 10	5560 -1	2 - F 7
FB01-60-821 48	5560 -1	2 - F 7
FB01-60-960B	4200 -1	1 - G15
N326-60-962	1320B -1	1 - G 4
N326-60-962	1320BA-1	1 - I 4
9958-60-8166	1700 -1	1 - N 6
9958-60-8166	1700A -1	1 - C 7
9958-60-8166	1920 -1	1 - L 8
9965-61-0005	3700 -2	1 - F14
9965-61-0010	3700 -2	1 - F14
9965-61-0015	3700 -2	1 - F14
9965-61-0020	3700 -2	1 - F14
9965-61-0025	3700 -2	1 - F14
9965-61-0030	3700 -2	1 - F14
1708-61-031	6130 -1	2 - F14
9965-61-0035	3700 -2	1 - F14
9965-61-0040	3700 -2	1 - F14
9965-61-0045	3700 -2	1 - F14
9965-61-0050	3700 -2	1 - F14
9965-61-0055	3700 -2	1 - F14
9965-61-0060	3700 -2	1 - F14
FB01-61-130A	6100 -1	2 - N13
FB01-61-140F	6100 -1	2 - N13
FB05-61-140	6100 -1	2 - N13
FB01-61-150A	6100 -1	2 - N13
FB02-61-155C	6100 -1	2 - N13
FB02-61-155C07	6100 -1	2 - N13
FB02-61-155C10	6100 -1	2 - N13
FB02-61-155C48	6100 -1	2 - N13
FB02-61-156B	6100 -1	2 - N13
FB01-61-161	5580 -1	2 - K 7
FB01-61-185A	6100 -1	2 - N13
FB01-61-185B	6100 -1	2 - N13
FB03-61-190C	6100 -1	2 - N13
FB03-61-191	6115 -1	2 - D14
FB01-61-211C	6100 -1	2 - N13
FB03-61-211	6100 -1	2 - N13
FB01-61-212B	6100 -1	2 - N13
FB01-61-213	6100 -1	2 - N13
8871-61-219A	6100 -1	2 - N13
FB01-61-220C	6100 -1	2 - N13
FB44-61-220A	6100 -1	2 - N13
FB01-61-251A	6100 -1	2 - N13
FB01-61-252	6100 -1	2 - N13
FB01-61-256	6100 -1	2 - N13
DA01-61-439C	6930 -1	3 - H 7
FB01-61-439B	6930 -1	3 - H 7
FB02-61-691	6120 -1	2 - E14
FB03-61-691	6120 -1	2 - E14
FB01-61-769	6120 -1	2 - E14
SA94-61-861	6330A -1	2 - E15
FB01-61-A01	6110 -1	2 - C14
FB01-61-A02	6110 -1	2 - C14
FB01-61-A02A	6110 -1	2 - C14
FB01-61-A10	6110 -1	2 - C14
FB01-61-A15	6110 -1	2 - C14
FB01-61-A20	6110 -1	2 - C14
FB01-61-A30	6110 -1	2 - C14
FB01-61-A30A	6110 -1	2 - C14
FB01-61-A40	6110 -1	2 - C14
FB01-61-A60A	6110 -1	2 - C14
FB01-61-A70	6110 -1	2 - C14
FB01-61-A70A	6110 -1	2 - C14
FB01-61-B01	6120 -1	2 - E14
FB01-61-B02A	6120 -1	2 - E14
UB94-61-B10	6120 -1	2 - E14
FB01-61-B15	6120 -1	2 - E14
FB01-61-B16A	6120 -1	2 - E14
FB05-61-B16	6120 -1	2 - E14
FB01-61-B19	6120 -1	2 - E14
UB39-61-B40	6120 -1	2 - E14
FB01-61-B60	6120 -1	2 - E14
FB03-61-C05	6115 -1	2 - D14
FB01-62-020E	6200 -1	2 - K14
FB02-62-020E	6200 -1	2 - K14
9960-62-203	1580B -1	1 - K 6
FB01-62-210A	6230 -1	2 - L14
FB01-62-212	6230 -1	2 - L14
FB01-62-310D	6230 -1	2 - L14
FB01-62-350D	6230 -1	2 - L14
FB01-62-361B	6230 -1	2 - L14
FB01-62-495	0900A -1	2 - C 3
FB02-62-496A	6230 -1	2 - L14
FB01-62-615	6230 -1	2 - L14
8BF1-62-620	6230 -1	2 - L14
8BF1-62-620B	6230 -1	2 - L14
8BF2-62-620	6230 -1	2 - L14
8BF2-62-620A	6230 -1	2 - L14
8BF3-62-620	6230 -1	2 - L14
8BF3-62-620A	6230 -1	2 - L14
8BF4-62-620	6230 -1	2 - L14
8BF4-62-620A	6230 -1	2 - L14
FB01-62-625	6230 -1	2 - L14
FB01-62-626	6230 -1	2 - L14
FB01-62-761B	6230 -1	2 - L14
FB01-62-761C	6230 -1	2 - L14
FB01-62-865A	6230 -1	2 - L14
FB01-62-866B	6230 -1	2 - L14
FB01-62-867A	6230 -1	2 - L14
FB01-62-868	6230 -1	2 - L14
FB01-62-869	6230 -1	2 - L14
FB01-62-8A1A	6230 -2	2 M14
FB01-62-911C	6230 -2	2 - M14
FB01-62-912B	6230 -2	2 - M14
FB01-62-913C	6230 -2	2 - M14
FB02-62-913B	6230 -2	2 - M14
FB01-63-310E	6230 -2	2 - M14
8BF2-63-620	6230 -2	2 - M14
8BF2-63-620B	6230 -2	2 - M14
FB01-63-865A	6230 -2	2 - M14
FB01-63-866B	6230 -2	2 - M14
FB01-63-901C	6300A -1	2 N14
FB02-63-901E	6300A -1	2 - N14
FB03-63-901E	6300A -1	2 - N14
8182-63-903	6300A -1	2 - N14
FB01-63-912C	6230 -2	2 - M14
FB02-63-912B	6230 -2	2 - M14
FB01-63-931E	6300A -1	2 - N14
FB02-63-931E	6300A -1	2 - N14
FB67-63-931A	6300A -1	2 - N14
FB67-63-932B	6300A -1	2 - N14
FB01-64-030	5560 -2	2 - G 7
FB01-64-030 07	5560 -2	2 - G 7
FB01-64-030 10	5560 -2	2 - G 7
FB01-64-030 48	5560 -2	2 - G 7
FB01-64-043	5560 -2	2 - G 7
FA54-64-044	5560 -2	2 - G 7
FB01-64-044	5560 -2	2 - G 7
FB01-64-045	5560 -2	2 - G 7
B092-64-046	5560 -1	2 - F 7
FB01-64-048	5560 -1	2 - F 7
H043-64-050	5560 -2	2 - G 7
FB01-64-101	5560 -2	2 - G 7
FB01-64-161A	5560 -2	2 - G 7
FB02-64-161A	5560 -2	2 - G 7
FB01-64-221A	5570 -1	2 - I 7
FB01-64-221A07	5570 -1	2 - I 7
FB01-64-221A10	5570 -1	2 - I 7
FB01-64-221A48	5570 -1	2 - I 7
FB01-64-231A	5570 -1	2 - I 7
FB01-64-231A07	5570 -1	2 - I 7
FB01-64-231A10	5570 -1	2 - I 7
FB01-64-231A48	5570 -1	2 - I 7
H002-64-245	6845 -1	3 - K 5
FB01-64-250B	5560 -1	2 - F 7
FB01-64-250B07	5560 -1	2 - F 7
FB01-64-250B10	5560 -1	2 - F 7
FB01-64-250B48	5560 -1	2 - F 7
FB01-64-270A	5560 -1	2 - F 7
FB01-64-270A07	5560 -1	2 - F 7
FB01-64-270A10	5560 -1	2 - F 7
FB01-64-270A48	5560 -1	2 - F 7
FB01-64-331A	5570 -1	2 - I 7
FB01-64-350C	5570 -1	2 - I 7
FB02-64-350F	5570 -1	2 - I 7
FB01-64-410C	5570 -1	2 - I 7
FB01-64-410C07	5570 -1	2 - I 7
FB01-64-410C10	5570 -1	2 - I 7
FB01-64-410C48	5570 -1	2 - I 7
FB02-64-410C	5570 -1	2 - I 7
FB02-64-410C07	5570 -1	2 - I 7
FB02-64-410C10	5570 -1	2 - I 7
FB02-64-410C48	5570 -1	2 - I 7
FB03-64-411	5570 -1	2 - I 7
FB03-64-411 07	5570 -1	2 - I 7
FB03-64-411 10	5570 -1	2 - I 7
FB03-64-411 48	5570 -1	2 - I 7
FB01-64-425	5570 -1	2 - I 7
FB01-64-430	5570 -1	2 - I 7
FB01-64-440B	5570 -1	2 - I 7
FB01-64-440B07	5570 -1	2 - I 7
FB01-64-440B10	5570 -1	2 - I 7
FB01-64-440B48	5570 -2	2 - J 7
FB01-64-44X	5570 -1	2 - I 7
FB01-64-451	5570 1	2 - I 7
FB03-64-451	5570 -1	2 - I 7
FB07-64-451	5570 -1	2 - I 7

PART NUMBER INDEX

PART NUMBER	SECTION	LOCATION
FB01-64-452	5570 -2	2 - J 7
FB01-64-453	5570 -2	2 - J 7
FB01-64-45X	5570 -2	2 - J 7
FB01-64-45X 07	5570 -2	2 - J 7
FB01-64-45X 10	5570 -2	2 - J 7
FB01-64-45X 48	5570 -2	2 - J 7
FB01-64-490B	5570 -1	2 - I 7
FB01-64-491	5570 -2	2 - J 7
H001-64-493	5570 -2	2 - J 7
FB01-64-495	5570 -2	2 - J 7
FB01-64-610C	5500A -1	2 - I 6
FB01-64-610D	5500 -2	2 - J 6
FB01-64-610D	5500B -1	2 - J 6
FB01-64-728	5580 -1	2 - K 7
FB01-64-760	5580 -1	2 - K 7
FB01-64-770	5580 -1	2 - K 7
FB01-64-822	5580 -1	2 - K 7
FB01-64-823	5580 -1	2 - K 7
FB01-64-828	5580 -1	2 - K 7
FB01-64-832A	5580 -1	2 - K 7
FB01-64-833	5580 -1	2 - K 7
FB01-64-840B	5500 -2	2 - H 6
FB01-64-840B	5500A -1	2 - I 6
FB01-64-840B	5500B -1	2 - J 6
FB01-64-850	5560 -2	2 - G 7
FB01-64-850 07	5560 -2	2 - G 7
FB01-64-850 10	5560 -2	2 - G 7
FB01-64-850 48	5560 -2	2 - G 7
BF32-64-903	5560 -2	2 - G 7
BE32-64-904	5560 -2	2 - G 7
FB01-64-905	5560 -1	2 - F 7
FB01-64-905 07	5560 -1	2 - F 7
FB01-64-905 10	5560 -1	2 - F 7
FB01-64-905 48	5560 -1	2 - F 7
FB01-64-911A	5560 -2	2 - G 7
FB01-64-911A07	5560 -2	2 - G 7
FB01-64-911A10	5560 -3	2 - H 7
FB01-64-911A48	5560 -3	2 - H 7
FB01-64-912	5560 -2	2 - G 7
FB01-64-912 07	5560 -2	2 - G 7
FB01-64-912 10	5560 -2	2 - G 7
FB01-64-912 48	5560 -2	2 - G 7
FB01-64-913	5560 -3	2 - H 7
FB01-64-914	5560 -3	2 - H 7
FB01-64-914 07	5560 -3	2 - H 7
FB01-64-914 10	5560 -3	2 - H 7
FB01-64-914 48	5560 -3	2 - H 7
FB01-64-921A	5560 -3	2 - H 7
FB01-64-921A07	5560 -3	2 - H 7
FB01-64-921A10	5560 -3	2 - H 7
FB01-64-921A48	5560 -3	2 - H 7
FB01-64-922	5560 -3	2 - H 7
FB01-64-922 07	5560 -3	2 - H 7
FB01-64-922 10	5560 -3	2 - H 7
FB01-64-922 48	5560 -3	2 - H 7
FB01-64-923	5560 -3	2 - H 7
FB01-64-924	5560 -3	2 - H 7
FB01-64-924 07	5560 -3	2 - H 7
FB01-64-924 10	5560 -3	2 - H 7
FB01-64-924 48	5560 -3	2 - H 7
H043-64-996A	5560 -3	2 - H 7
H199-64-998	5560 -3	2 - H 7
H199-64-999	5560 -3	2 - H 7
0483-66-061A	5100 -1	2 - K 3
FB01-66-117	6611 -1	2 - N15
FB01-66-119	6611 -1	2 - N15
FB01-66-120	6611 -1	2 - N15
FB07-66-120	6611 -1	2 - N15
FB01-66-126	6611 -1	2 - N15
FB01-66-127	6611 -1	2 - N15
FB01-66-130	6612 -1	2 - C16
FB01-66-131	6612 -1	2 - C16
FBO1-66-132	6612 -1	2 - C16
FB01-66-151	0900A -1	2 - C 3
H043-66-154	0900A -1	2 - C 3
BC46-66-158	0900A -1	2 - C 3
FB01-66-160F	6612 -1	2 - C16
FB07-66-160F	6612 -1	2 - C16
FB67-66-160B	6612 -1	2 - C16
FB01-66-161	6612 -1	2 - C16
FB01-66-162	6612 -1	2 - C16
FB01-66-163	6612 -1	2 - C16
FB01-66-164	6612 -1	2 - C16
FB01-66-166	6612 -1	2 - C16
FB01-66-167	6612 -1	2 - C16
FB01-66-168	6612 -1	2 - C16
FB01-66-169	6612 -1	2 - C16
FB01-66-170	6612 -1	2 - C16
FB01-66-171	6612 -1	2 - C16
FB01-66-172	6612 -1	2 - C16
FB01-66-173	6612 -1	2 - C16
FB01-66-174	6612 -1	2 - C16
FB01-66-180	6612 -1	2 - C16
FB67-66-180	6612 -1	2 - C16
FBO7-66-180	6612 -1	2 - C16
FB01-66-181	6612 -1	2 - C16
FB01-66-182	6612 -1	2 - C16
FB01-66-183	6612 -1	2 - C16
FB01-66-184	6612 -1	2 - C16
H005-66-190A	4300 -1	1 - H15
FB01-66-201	6930 -1	3 - H 7
FB01-66-241	6610 -1	2 - M15
FB01-66-250	6610 -1	2 - M15
UB40-66-251	6610 -1	2 - M15
F046-66-310B	6640 -1	2 - H16
FB01-66-310A	6640 -1	2 - H16
FB01-66-311B	6640 -1	2 - H16
FB44-66-311A	6640 -1	2 - H16
B107-66-319	6640 -1	2 - H16
FB01-66-320A	6640 -1	2 - H16
FB44-66-320	6640 -1	2 - H16
FB01-66-330	6640 -1	2 - H16
FB02-66-330	6640 -1	2 - H16
8AF1-66-340	6640 -1	2 - H16
8AF2-66-340	6640 -1	2 - H16
FB07-66-340	6610 -1	2 - M15
FB07-66-34X	6612 -1	2 - C16
FB05-66-350A	6615 -1	2 - D16
FA43-66-361A	6640 -1	2 - H16
B258-66-365	4300 -1	1 - H15
UB40-66-365	6640 -1	2 - H16
FB05-66-370A	6615 -1	2 - D16
8871-66-450	4400 -1	1 - F16
F034-66-470	4160 -1	1 - F15
B002-66-490A	4300 -1	1 - H15
H003-66-490	4300 -1	1 - H15
FB01-66-4D0	4300 -1	1 - H15
FA54-66-540	5560 -1	2 - F 7
FB01-66-540	6620 -1	2 - E16
G030-66-540B	6845 -1	3 - K 5
H260-66-546	6620 -1	2 - E16
FB02-66-600A	6610 -1	2 - M15
FB01-66-730A	6700 -1	3 - G 3
FB01-66-730A	6700A -1	3 - H 3
FB67-66-730	6700B -1	3 - I 3
FB01-66-731	6700 -1	3 - G 3
FB01-66-731	6700A -1	3 - H 3
H001-66-733	6700 -1	3 - G 3
H001-66-733	6700A -1	3 - H 3
H001-66-739	6700 -1	3 - G 3
H001-66-739	6700A -1	3 - H 3
F044-66-760	6701A -1	3 - K 3
F044-66-760	6701B -1	3 - L 3
FB02-66-760	6701 -1	3 - J 3
F044-66-762	6701A -1	3 - K 3
FB02-66-762	6701 -1	3 - J 3
FB02-66-762	6701A -1	3 - K 3
FB02-66-762	6701B -1	3 - L 3
FB01-66-780	6635 -1	2 - G16
FB03-66-780	6635 -1	2 - G16
H001-66-780B	6635 -1	2 - G16
FB01-66-790	6635 -1	2 - G16
FB01-66-790	6635 -1	2 - G16
FB03-66-790	6635 -1	2 - G16
H001-66-790B	6635 -1	2 - G16
FB05-66-792	6635 -1	2 - G16
FB05-66-870	6680 -3	2 - K16
FB03-66-902	6680 -3	2 - K16
FB11-66-921A	6680 -3	2 - K16
FB76-66-921	6680 -3	2 - K16
FB02-66-940B	6682 -2	3 - D 3
FB11-66-940B	6682 -2	3 - D 3
FB12-66-940A	6682 -2	3 - D 3
FB67-66-940B	6682 -2	3 - D 3
FB68-66-940B	6682 -2	3 - D 3
FB02-66-941	6682 -2	3 - D 3
GB08-66-941	6704 -2	3 - F 4
GB08-66-941	6750 -1	3 - K 4
FB02-66-942A	6682 -2	3 - D 3
FB01-66-945	6682 -2	3 - D 3
F055-66-970	5700AC-3	2 - H10
FB01-66-970	6684 -1	3 - F 3
FB03-66-970	6684 -1	3 - F 3
0222-66-971	5390 -2	2 - D 6
0222-66-971	5390A -2	2 - F 6
UB42-66-971	6704 -2	3 - F 4
FB01-66-991B	6684 -1	3 - F 3
FB01-66-994A	6684 -1	3 - F 3
FB01-66-9A0A	6682 -2	3 - D 3
FB11-66-9B0	6682 -3	3 - E 3
FB12-66-9B0	6682 -2	3 - D 3
F055-66-9L0A	6680 -4	2 - L16
FB01-66-A30	6682 -3	3 - E 3
FB67-66-A30	6682 -3	3 - E 3
FB01-66-A32	6682 -3	3 - F 3
FB01-66-A35	6682 -3	3 - E 3
FB67-66-A35	6682 -3	3 - E 3
FB01-66-A3X	6682 -3	3 - E 3
HE02-66-A3X	6682 -3	3 - E 3
FB01-66-A3Y	6682 -3	3 - E 3
FB67-66-A3Y	6682 -3	3 - E 3
FB03-66-A40	6680 -3	2 - K16
FB01-66-A91	6682 -3	3 - E 3
FB01-66-A92	6682 -2	3 - D 3
FB01-66-A9X	6682 -2	3 - D 3
FB01-66-A9Y	6682 -2	3 - D 3
FB11-66-AH2	6680 -4	2 - L16
FB75-66-AM0	6680 -3	2 - K16
FB03-66-AT3	6680 -4	2 - L16
FB11-66-AT3	6680 -4	2 - L16
FB11-66-AT8	6680 -4	2 - L16
F055-66-BL1	6680 -4	2 - L16
F055-66-BL2	6680 -4	2 - L16
9960-66-3563	1710A -1	1 - G 7
0000-66-A901	6682 -2	3 - D 3
FB01-67-010T	6700 -1	3 - G 3
FB01-67-010Y	6700 -1	3 - G 3
FB02-67-010S	6700 -1	3 - G 3
FB07-67-010A	6700 -1	3 - G 3
FB08-67-010	6700 -1	3 - G 3
FB11-67-010A	6700 -1	3 - G 3
FB11-67-010B	6700 -1	3 - G 3
FB12-67-010A	6700 -1	3 - G 3
FB44-67-010C	6700 -1	3 - G 3
FB44-67-010H	6700 -1	3 - G 3
FB55-67-010H	6700A -1	3 - H 3
FB60-67-010H	6700A -1	3 - H 3
FB67-67-010G	6700B -1	3 - I 3
FBO2-67-010X	6700 -1	3 - G 3
FB01-67-012	6704 -2	3 - F 4
S083-67-012A	5390 -2	2 - D 6
S083-67-012A	5390A -2	2 - F 6
FB01-67-014	6704 -2	3 - F 4
FB02-67-019A	6704 -2	3 - F 4
FB01-67-021	5530 -1	2 - L 6
FB01-67-030G	6702 -1	3 - M 3
FB08-67-030E	6702 -1	3 - M 3
FB55-67-030B	6702A -1	3 - N 3
FB60-67-030D	6702A -1	3 - N 3
FB67-67-030C	6702B -1	3 - C 4
UB42-67-031	6704 -2	3 - F 4
FB01-67-037	6702 -1	3 - M 3
FB01-67-050P	6700 -1	3 - G 3
FB02-67-050M	6700 -1	3 - G 3
FB55-67-050C	6700A -1	3 - H 3
FB67-67-050M	6700B -1	3 - I 3
B001-67-051	6704 -2	3 - F 4
FB01-67-051	6230 -2	2 - M14
UB42-67-051	6704 -2	3 - F 4
WO29-67-051	6704 -2	3 - F 4
WO29-67-051A	6704 -2	3 - F 4
8545-67-052	5560 3	2 - H 7
FB02-67-056	6750 -1	3 - K 4
WU23-67-056	5100 -1	2 - K 3
FB02-67-057	6750 -1	3 - K 4
FB02-67-058B	6700 -1	3 - G 3
G001-67-059	6682 -3	3 - E 3
FB01-67-060B	6700 -1	3 - G 3
FB01-67-060B	6700A -1	3 - H 3
FB02-67-060B	6700 -1	3 - G 3
FB02-67-060B	6700A -1	3 - H 3
G001-67-061	6682 -3	3 - E 3
F055-67-06YB	6700B -1	3 - I 3
FB01-67-070F	6701 -1	3 - J 3
FB01-67-070G	6701 -1	3 - J 3
FB01-67-070H	6701B -1	3 - L 3
FB02-67-070F	6701 -1	3 - J 3
FB02-67-070H	6701 -1	3 - J 3
FB44-67-070E	6701 -1	3 - J 3
FB44-67-070E	6701A -1	3 - K 3
FB55-67-070B	6701A -1	3 - K 3
FB56-67-070B	6701A -1	3 - K 3
FB60-67-070B	6701A -1	3 - K 3
FB01-67-072	6704 -2	3 - F 4
GC77-67-072	5560 -3	2 - H 7
FB01-67-073A	6704 -2	3 - F 4
FB01-67-099	6700B -1	3 - I 3
FB01-67-099	6701 -1	3 - J 3
FB01-67-099	6701A -1	3 - K 3
FB01 67-099	6701B -1	3 - L 3
H115-67-099	6700B -1	3 - I 3
H115-67-099	6701 -1	3 - J 3
H115-67-099	6701A -1	3 - K 3
H115-67-099	6701B -1	3 - L 3
H116-67-099	6700B -1	3 - I 3

PART NUMBER INDEX

PART NUMBER	SECTION	LOCATION
H116-67-099	6701 -1	3 - J 3
H116-67-099	6701A -1	3 - K 3
H116-67-099	6701B -1	3 - L 3
H117-67-099	6700B -1	3 - I 3
H117-67-099	6701 -1	3 - J 3
H117-67-099	6701A -1	3 - K 3
H117-67-099	6701B -1	3 - L 3
FB01-67-100B	6700 -1	3 - G 3
FB01-67-100B	6700A -1	3 - H 3
FB01-67-100C	6700 -1	3 - G 3
FB01-67-100C	6700A -1	3 - H 3
FB03-67-100B	6700 -1	3 - G 3
FB03-67-100B	6700A -1	3 - H 3
FB03-67-100C	6700 -1	3 - G 3
FB03-67-100C	6700A -1	3 - H 3
FB67-67-100B	6700B -1	3 - I 3
FB01-67-101	6330 -1	2 - C15
0000-67-0123-19	6132A -2	2 - H14
0000-67-0123-38	6132A -1	2 - G14
0000-67-0123-17	6132A -2	2 - H14
0000-67-0123-39	6132A -1	2 - G14
0000-67-0123-18	6132A -2	2 - H14
0000-67-0123-18	6152A -1	2 - J14
0000-67-0123-19	6152A -1	2 - J14
0000-67-0123-21	6152A -1	2 - J14
FB01-67-190F	6703 -1	3 - D 4
FB02-67-190B	6703 -1	3 - D 4
FB03-67-190A	6703 -1	3 - D 4
FB67-67-190D	6703 -1	3 - D 4
FB01-67-200F	6703 -1	3 - D 4
FB02-67-200B	6703 -1	3 - D 4
FB03-67-200A	6703 -1	3 - D 4
FB67-67-200D	6703 -1	3 - D 4
FB55-67-230D	4370 -2	1 - E16
FB55-67-230E	4370 -2	1 - E16
F041-67-240	6702 -1	3 - M 3
FB01-67-240A	6700 -1	3 - G 3
FB01-67-240A	6700A -1	3 - H 3
F041-67-241	6702 -1	3 - M 3
F041-67-242	6702 -1	3 - M 3
S083-67-253	6704 -2	3 - F 4
S113-67-254A	5103 -1	2 - L 3
S113-67-254A	5105 -1	2 - M 3
S113-67-254A	6704 -2	3 - F 4
FB01-67-280A	6701 -1	3 - J 3
FB01-67-280A	6701B -1	3 - L 3
FB01-67-280C	6701A -1	3 - K 3
FB01-67-304	6730 -1	3 - I 4
FB01-67-321B	6730 -1	3 - I 4
FB02-67-321A	6730 -1	3 - I 4
FB02-67-330	6750 -1	3 - K 4
HE76-67-330A	6730 -1	3 - I 4
FB02-67-331	6750 -1	3 - K 4
H260-67-331	6730 -1	3 - I 4
HE76-67-331A	6730 -1	3 - I 4
FB01-67-350A	6730 -1	3 - I 4
FB05-67-350A	6730 -1	3 - I 4
FB06-67-350	6730 -1	3 - I 4
FB01-67-351	6740 -1	3 - J 4
FB05-67-351	6740 -1	3 - J 4
GJ83-67-354	6740 -1	3 - J 4
FB01-67-360C	6730 -1	3 - I 4
FB01-67-361	6730 -1	3 - I 4
FB01-67-362	6730 -1	3 - I 4
FB01-67-363	6730 -1	3 - I 4
FB01-67-364	6730 -1	3 - I 4
FB01-67-365	6730 -1	3 - I 4
FB34-67-365	5560 -3	2 - H 7
FB02-67-366	6750 -1	3 - K 4
FB02-67-366A	6750 -1	3 - K 4
FB02-67-402A	6750 -1	3 - K 4
FB02-67-406	6750 -1	3 - K 4
FB03-67-406	6750 -1	3 - K 4
FB02-67-408A	6750 -1	3 - K 4
0000-67-0411-12	6152A -1	2 - J14
FB02-67-421	6750 -1	3 - K 4
FB02-67-450A	6750 -1	3 - K 4
FB07-67-450	5840A -4	2 - F13
FB07-67-450 07	5840A -4	2 - F13
FB07-67-450 10	5840A -4	2 - F13
FB07-67-450 48	5840A -4	2 - F13
FB02-67-451	6760 -1	3 - L 4
FB02-67-458B	6750 -1	3 - K 4
FB02-67-480A	6750 -1	3 - K 4
FB01-67-481	6720 -2	3 - H 4
FB02-67-481	6750 -1	3 - K 4
FB01-67-482A	6720 -2	3 - H 4
FB01-67-483	6720 -2	3 - H 4
FB04-67-485	6720 -2	3 - H 4
FB01-67-488A	6720 -2	3 - H 4
FB01-67-4C0B	6720 -2	3 - H 4
FB01-67-4C7	6720 -2	3 - H 4
FB41-67-4T0	6720 -2	3 - H 4
FB01-67-500B	6720 -2	3 - H 4
FB02-67-500	6750 -1	3 - K 4
FB04-67-500B	6750 -1	3 - K 4
FB01-67-501B	6720 -2	3 - H 4
4116-67-502	6750 -1	3 - K 4
FB01-67-502	6720 -2	3 - H 4
FB03-67-502	6720 -2	3 - H 4
FB04-67-502	6720 -2	3 - H 4
FB05-67-502	6720 -2	3 - H 4
FB06-67-502	6720 -2	3 - H 4
S013-67-502	6750 -1	3 - K 4
SA70-67-502	6750 -1	3 - K 4
FB01-67-503A	6720 -2	3 - H 4
FB02-67-503	6720 -2	3 - H 4
FB04 67-503	6720 -2	3 - H 4
FB01-67-504A	6720 -2	3 - H 4
G043-67-50u	5390A -2	2 - F 6
0000-67-0508-43	6132A -2	2 - H14
FA54-67-508	6750 -1	3 - K 4
G033-67-509	6750 -1	3 - K 4
G044-67-509	6750 -1	3 - K 4
FB01-67-510	6720 -2	3 - H 4
FB02-67-510	6750 -1	3 - K 4
FB01-67-517	6750 -1	3 - K 4
FB01-67-519A	6720 -2	3 - H 4
FB02-67-519	6720 -2	3 - H 4
FB02-67-520A	6750 -1	3 - K 4
FB01-67-560	6630 -1	2 - F16
FB05-67-560	6630 -1	2 - F16
FB01-67-562	6630 -1	2 - F16
FB05-67-562	6630 -1	2 - F16
FB01-67-563	6630 -1	2 - F16
FB01-67-564	6630 -1	2 - F16
FB01-67-566	6630 -1	2 - F16
FB01-67-567	6630 -1	2 - F16
FB01-67-568	6630 -1	2 - F16
FB01-67-569	6630 -1	2 - F16
FB01-67-5A0A	6610 -1	2 - M15
B092-67-740	3240 -2	1 - D13
BO92-67-740	6630 -1	2 - F16
FB02-67-740	6630 -1	2 - F16
FB05-67-740	6630 -1	2 - F16
FB10-67-740	6600B -3	2 - I15
FB10-67-740	6600BA-3	2 - L15
FB10-67-740	6630 -1	2 - F16
FB11-67-740	3240 -2	1 - D13
FB11-67-740	6600B -3	2 - I15
FB11-67-740	6630 -1	2 - F16
FB12-67-740	6630 -1	2 - F16
FB25-67-740	6600B -3	2 - I15
FB25-67-740	6600BA-3	2 - L15
FB25-67-740	6600BA-3	2 - L15
FB25-67-740	6630 -1	2 - F16
GE70-67-740	6630 -1	2 - F16
FB01-67-741	6702 -1	3 - M 3
FB01-67-741	6702A -1	3 - N 3
WB22-67-741	6630 -1	2 - F16
FB05-67-742	6630 -1	2 - F16
FB10-67-742	3240 -2	1 - D13
FB10-67-742	6600B -3	2 - I15
FB10-67-742	6600BA-3	2 - L15
FB10-67-742	6630 -1	2 - F16
FB05-67-744	6630 -1	2 - F16
FB10-67-744	3240 -2	1 - D13
FB10-67-744	6600B -3	2 - I15
FB10-67-744	6600BA-3	2 - L15
FB10-67-744	6630 -1	2 - F16
FB07-67-770A	6630 -1	2 - F16
FB01-67-790C	6630 -1	2 - F16
FB67-67-790A	6630 -1	2 - F16
FB01-67-830	6630 -1	2 - F16
FB01-67-980E	6700 -1	3 - G 3
FB01-67-980E	6700A -1	3 - H 3
FB01-67-980E	6700B -1	3 - I 3
0000-67-A00A-7A	6132A -1	2 - G14
0000-67-A10A-6A	6132A -1	2 - G14
0000-67-A27A-6A	6132A -1	2 - G14
0000-67-A28A-6A	6132A -1	2 - G14
0000-67-A29A-6A	6132A -1	2 - G14
0000-67-A40A-6A	6132A -1	2 - G14
0000-67-A41A-6A	6132A -1	2 - G14
0000-67-A42A-6A	6132A -1	2 - G14
0000-67-A43A-6A	6132A -1	2 - G14
0000-67-A44A-6A	6132A -1	2 - G14
0000-67-A44A-6F	6132A -1	2 - G14
0000-67-A45A-6A	6132A -1	2 - G14
0000-67-A48A-6F	6132A -1	2 - G14
0000-67-A49A-6F	6132A -1	2 - G14
0000-67-A57B-6P	6132A -1	2 - G14
0000-67-A57B-6P	6132A -1	2 - G14
0000-67-A90A-6A	6132A -1	2 - G14
0000-67-A92A-3B	6132A -2	2 - H14
0000-67-B01A-6A	6132A -1	2 - G14
0000-67-B03A-6A	6152A -1	2 - J14
0000-67-B04A-6A	6152A -1	2 - J14
0000-67-B11A-6A	6152A -1	2 - J14
0000-67-B13A-6A	6152A -1	2 - J14
0000-67-B14A-6A	6152A -1	2 - J14
0000-67-B16A-8F	6152A -1	2 - J14
0000-67-B21A-6A	6152A -1	2 - J14
0000-67-B28A-6F	6152A -1	2 - J14
0000-67-B30A-6A	6152A -1	2 - J14
0000-67-B38A-6A	6152A -1	2 - J14
0000-67-B39A-6A	6152A -1	2 - J14
0000-67-B40B-6A	6152A -1	2 - J14
0000-67-B41A-6A	6152A -1	2 - J14
0000-67-B41A-6A	6152A -1	2 - J14
0000-67-B44A-3B	6152A -1	2 - J14
0000-67-B46A-6A	6132A -1	2 - G14
0000-67-B46A-6A	6152A -1	2 - J14
0000-67-B46A-3B	6152A -1	2 - J14
0000-67-B48A-6A	6132A -1	2 - G14
0000-67-B51A-6A	6152A -1	2 - J14
0000-67-B52A-6A	6152A -1	2 - J14
0000-67-B54A-6A	6132A -1	2 - G14
0000-67-B56A-6F	6152A -1	2 - J14
0000-67-B80A-6A	6132A -1	2 - G14
0000-67-B81A-6A	6152A -1	2 - J14
0000-67-B93A-6F	6152A -1	2 - J14
0000-67-C10A-6A	6142A -1	2 - I14
0000-67-C10A-6A	6142A -1	2 - I14
0000-67-C31A-6A	6142A -1	2 - I14
0000-67-C41A-6A	6142A -1	2 - I14
0000-67-C42A-6A	6142A -1	2 - I14
0000-67-C43A-3F	6142A -1	2 - I14
0000-67-C44A-3F	6142A -1	2 - I14
0000-67-D00A-6A	6142A -1	2 - I14
0000-67-D10A-6A	6142A -1	2 - I14
0000-67-D11A-6A	6142A -1	2 - I14
0000-67-D12A-6A	6142A -1	2 - I14
0000-67-D13A-6A	6142A -1	2 - I14
0000-67-D20A-6A	6142A -1	2 - I14
0000-67-D21A-6A	6142A -1	2 - I14
0000-67-D22A-6A	6142A -1	2 - I14
0000-67-D23A-6A	6142A -1	2 - I14
0000-67-D24A-6A	6142A -1	2 - I14
0000-67-D51A-6A	6142A -1	2 - I14
0000-67-D56A-6A	6142A -1	2 - I14
0000-67-D60A-6A	6142A -1	2 - I14
0000-67-D61A-6A	6142A -1	2 - I14
0000-67-E01A-7F	6132A -2	2 - H14
0000-67-E10A-6A	6132A -2	2 - H14
0000-67-E20A-6A	6132A -2	2 - H14
0000-67-E21A-7A	6132A -2	2 - H14
0000-67-E21A-6A	6132A -1	2 - G14
0000-67-E22A-6A	6132A -1	2 - G14
0000-67-E23A-6A	6132A -2	2 - H14
0000-67-E24A-6A	6132A -1	2 - G14
0000-67-E25B-6A	6132A -2	2 - H14
0000-67-E26A-6A	6132A -2	2 - H14
0000-67-X10M-25	6132A -1	2 - G14
0000-67-X10M-30	6142A -1	2 - I14
0000-67-X10M-34	6142A -1	2 - I14
0000-67-X10M-48	6142A -1	2 - I14
0000-67-X10M-36	6152A -1	2 - J14
0000-67-X20M-00	6132A -1	2 - G14
0000-67-X20M-02	6132A -1	2 - G14
0000-67-X20M-00	6152A -1	2 - J14
0000-67-X30B-03	6152A -1	2 - J14
0000-67-X40A-02	6142A -1	2 - I14
0000-67-X40A-01	6142A -1	2 - I14
0000-67-X40A-32	6152A -1	2 - J14
0000-67-X40M-36	6132A -1	2 - G14
0000-67-X40M-35	6132A -1	2 - G14
0000-67-X40M-25	6132A -1	2 - G14
0000-67-X40M-15	6142A -1	2 - I14
0000-67-X40M-09	6142A -1	2 - I14
0000-67-X40M-02	6152A -1	2 - J14
0000-67-X40M-30	6152A -1	2 - J14
0000-67-X60A-00	6132A -1	2 - G14
0000-67-X60A-00	6152A -1	2 - J14
0000-67-1410-27	6132A -1	2 - G14
0000-67-1983-82	6132A -1	2 - G14
0000-67-1983-82	6142A -1	2 - I14
0000-67-1983-77	6142A -1	2 - I14
0000-67-1983-76	6142A -1	2 - I14
0000-67-5715-75	6142A -1	2 - I14
0000-67-A434-6F	6132A -1	2 - G14
0000-67-E414-6A	6132A -1	2 - G14
FB01-68-020	6800A -1	3 - M 4
FB01-68-020 02	6800A -1	3 - M 4
FB01-68-020 07	6800A -1	3 - M 4

PART NUMBER INDEX

PART NUMBER	SECTION	LOCATION
FB01-68-020 10	6800A -1	3 - M 4
FB01-68-020 48	6800A -1	3 - M 4
FB67-68-020	6800AB-1	3 - N 4
FB67-68-020 07	6800AB-1	3 - N 4
FB67-68-020 48	6800AB-1	3 - N 4
FA56-68-025B	5840A -1	2 - C13
FA56-68-025B09	5840A -1	2 - C13
FA56-68-025B11	5840A -1	2 - C13
FA56-68-025B48	5840A -1	2 - C13
FB02-68-030	6800A -1	3 - M 4
FB02-68-030 07	6800A -1	3 - M 4
FB02-68-030 10	6800A -1	3 - M 4
FB02-68-030 48	6800A -1	3 - M 4
FB03-68-030A	6800A -1	3 - M 4
FB03-68-030A07	6800A -1	3 - M 4
FB03-68-030A10	6800A -1	3 - M 4
FB03-68-030A48	6800A -1	3 - M 4
FB03-68-032	6800A -1	3 - M 4
FB67-68-032	6800AB-1	3 - N 4
FB67-68-032 07	6800AB-1	3 - N 4
FB67-68-032 48	6800AB-1	3 - N 4
FB03-68-033	6800A -1	3 - M 4
FB03-68-034	6800A -1	3 - M 4
FB67-68-03XB	6800AB-1	3 - N 4
FB67-68-03XB07	6800AB-1	3 - N 4
FB67-68-03XB48	6800AB-1	3 - N 4
FB01-68-040	6800A -1	3 - M 4
FB01-68-040 02	6800A -1	3 - M 4
FB01-68-040 07	6800A -1	3 - M 4
FB01-68-040 10	6800A -1	3 - M 4
FB01-68-040 48	6800A -1	3 - M 4
FB01-68-042	6865A -1	3 - G 6
0810-68-070E	6870 -1	3 - J 6
F057-68-071	3700 -3	1 - G14
F057 68-071	6870 -1	3 - J 6
FB67-68-095A	6800AB-1	3 - N 4
FB01-68-110A	6820A -1	3 - D 5
FB01-68-110A07	6820A -1	3 - D 5
FB01-68-110A10	6820A -1	3 - D 5
FB01-68-110A48	6820A -1	3 - D 5
FB01-68-120A	6820A -1	3 - D 5
FB01-68-120A07	6820A -1	3 - D 5
FB01-68-120A10	6820A -1	3 - D 5
FB01-68-120A48	6820A -1	3 - D 5
FB01-68-151	6800A -1	3 - M 4
FB01-68-151	6820A -1	3 - D 5
FB01-68-151 02	6800A -1	3 - M 4
FB01-68-151 07	6800A -1	3 - M 4
FB01-68-151 07	6820A -1	3 - D 5
FB01-68-151 10	6800A -1	3 - M 4
FB01-68-151 10	6820A -1	3 - D 5
FB01-68-151 48	6800A -1	3 - M 4
FB01-68-151 48	6820A -1	3 - D 5
UB39-68-153	6820A -1	3 - D 5
FB02-68-154	6820A -1	3 - D 5
FB01-68-155	6820A -1	3 - D 5
FB67-68-160	6820AA-1	3 - E 5
FB67-68-160 07	6820AA-1	3 - E 5
FB67-68-160 48	6820AA-1	3 - E 5
FB01-68-170A	6820A -1	3 - D 5
FB01-68-170A07	6820A -1	3 - D 5
FB01-68-170A10	6820A -1	3 - D 5
FB01-68-170A48	6820A -1	3 - D 5
FB67-68-170	6820AA-1	3 - E 5
FB67-68-170 07	6820AA-1	3 - E 5
FB67-68-170 48	6820AA 1	3 - E 5
FB01-68-190A	6820A -1	3 - D 5
FB01-68-190A07	6820A -1	3 - D 5
FB01-68-190A10	6820A -1	3 - D 5
FB01-68-190A48	6820A -1	3 - D 5
FB67-68-201	6810 -1	3 - C 5
G030-68-213B	6800A -1	3 - M 4
FB67-68-21XB	6810 -1	3 - C 5
FB67-68-21XB07	6810 -1	3 - C 5
FB67-68-21XB48	6810 -1	3 - C 5
0208-68-230	6870 -1	3 - J 6
FB67-68-24YA	6810 -1	3 - C 5
FB67-68-24YA07	6810 -1	3 - C 5
FB67-68-24YA48	6810 -1	3 - C 5
FB67-68-25YA	6810 -1	3 - C 5
FB67-68-25YA07	6810 -1	3 - C 5
FB67-68-25YA48	6810 -1	3 - C 5
FB67-68-261B	6810 -1	3 - C 5
FB67-68-261B07	6810 -1	3 - C 5
FB67-68-261B48	6810 -1	3 - C 5
FB67-68-271B	6810 -1	3 - C 5
FB67-68-271B07	6810 -1	3 - C 5
FB67-68-271B48	6810 -1	3 - C 5
B100-68-279	6865AA-1	3 - H 6
FB67-68-285	6865AA-1	3 - H 6
FB67-68-285 07	6865AA-1	3 - H 6
FB67-68-285 48	6865AA-1	3 - H 6
FB67-68-28XA	6810 -1	3 - C 5
FB67-68-28XA07	6810 -1	3 - C 5
FB67 68-28XA48	6810 -1	3 - C 5
FB67-68-29XA	6810 -1	3 - C 5
FB67-68-29XA07	6810 -1	3 - C 5
FB67-68-29XA48	6810 -1	3 - C 5
FB01-68-370	6840A -1	3 - F 5
FB01-68-370 02	6840A -1	3 - F 5
FB01-68-370 07	6840A -1	3 - F 5
FB01-68-370 10	6840A -1	3 - F 5
FB01-68-370 48	6840A -1	3 - F 5
FB67 68-370	6840AB-1	3 - J 5
FB67-68-370 07	6840AB-1	3 - J 5
FB67-68-370 48	6840AB-1	3 - J 5
FB01-68-390	6840A -1	3 - F 5
FB01-68-390 02	6840A -1	3 - F 5
FB01-68-390 07	6840A -1	3 - F 5
FB01-68-390 10	6840A -1	3 - F 5
FB01-68-390 48	6840A -1	3 - F 5
FB67-68-390	6840AB-1	3 - J 5
FB67-68-390 07	6840AB-1	3 - J 5
FB67-68-390 48	6840AB-1	3 - J 5
B100-68-401	6865A -1	3 - G 6
B100-68-401	6865AA-1	3 - H 6
FA54-68-402	5840A -1	2 - C13
FA54-68-402	5840AB-1	2 - K13
FB01-68-403	5840A -1	2 - C13
FB01-68-403	5840AB-1	2 - K13
FB01-68-411	5840A -1	2 - C13
FB01-68-412	5840A -1	2 - C13
FB01-68-413	5840A -1	2 - C13
FB01-68-413	5840AB-1	2 - K13
FB01-68-414	5840A -1	2 - C13
FB01-68-414	5840AB-1	2 - K13
FB01-68-415	5840A -1	2 - C13
FB01-68-415	5840AB-1	2 - K13
FB02-68-420A	5840A -3	2 - E13
FB02-68-420A07	5840A -3	2 - E13
FB02-68-420A10	5840A -3	2 - E13
FB02-68-420A48	5840A -3	2 - E13
FB03-68-420A	5840A -1	2 - C13
FB03-68-420A	5840A -2	2 - D13
FB03-68-420A07	5840A -2	2 - D13
FB03-68-420A10	5840A -2	2 - D13
FB03-68-420A48	5840A -2	2 - D13
FB04-68-420A	5840A -2	2 - D13
FB04-68-420A07	5840A -2	2 - D13
FB04-68-420A10	5840A -2	2 - D13
FB04-68-420A48	5840A -2	2 - D13
FB05-68-420B	5840A -1	2 - C13
FB05-68-420B07	5840A -1	2 - C13
FB05-68-420B10	5840A -1	2 - C13
FB05-68-420B50	5840A -1	2 - C13
FB06-68-420B	5840A -3	2 - E13
FB06-68-420B07	5840A -3	2 - E13
FB06-68-420B13	5840A -3	2 - E13
FB06-68-420B50	5840A -3	2 - E13
FB07-68-420	5840A -2	2 - D13
FB07-68-420 07	5840A -2	2 - D13
FB07-68-420 10	5840A -2	2 - D13
FB07-68-420 48	5840A -2	2 - D13
FB08-68-420	5840A -2	2 - D13
FB08-68-420 07	5840A -2	2 - D13
FB08-68-420 13	5840A -2	2 - D13
FB08-68-420 48	5840A -2	2 - D13
FB09-68-420	5840A -1	2 - C13
FB09-68-420 09	5840A -1	2 - C13
FB09-68-420 10	5840A -1	2 - C13
FB09-68-420 50	5840A -1	2 - C13
FB10-68-420	5840A -3	2 - E13
FB10-68-420 09	5840A -3	2 - E13
FB10-68-420 13	5840A -3	2 - E13
FB10-68-420 50	5840A -3	2 - E13
FB41-68-420	5840A -3	2 - E13
FB41-68-420 07	5840A -3	2 - E13
FB41-68-420 10	5840A -3	2 - E13
FB41-68-420 48	5840A -3	2 - E13
FB44-68-420A	5840A -3	2 - E13
FB44-68-420A07	5840A -3	2 - E13
FB44-68-420A10	5840A -3	2 - E13
FB44-68-420A49	5840A -3	2 - E13
FB45-68-420A	5840A -2	2 - D13
FB45-68-420A07	5840A -2	2 - D13
FB45-68-420A10	5840A -2	2 - D13
FB45-68-420A49	5840A -2	2 - D13
FB46-68-420B	5840A -2	2 - D13
FB46-68-420B09	5840A -2	2 - D13
FB46-68-420B10	5840A -2	2 - D13
FB46-68-420B48	5840A -2	2 - D13
FB60-68-420	5840A -2	2 - D13
FB60-68-420 07	5840A -2	2 - D13
FB60-68-420 10	5840A -2	2 - D13
FB60-68-420 49	5840A -2	2 - D13
FB61-68-420	5840A -2	2 - D13
FB61-68-420 09	5840A -2	2 - D13
FB61-68-420 10	5840A -3	2 - E13
FB61-68-420 50	5840A -3	2 - E13
FB67-68-420	5840AB-1	2 - K13
FB67-68-420 09	5840AB-1	2 - K13
FB67-68-420 50	5840AB-1	2 - K13
FB68-68-420	5840AB-1	2 - K13
FB68-68-420 09	5840AB-1	2 - K13
FB68-68-420 50	5840AB-1	2 - K13
FB79-68-420	5840A -3	2 - E13
FB79-68-420 02	5840A -3	2 - E13
FB67-68-422	5840AB-2	2 - L13
FB01-68-423	5840A -5	2 - G13
FB01-68-423	5840AB-1	2 - K13
FB01-68-423 02	5840A -5	2 - G13
FB01-68-423 02	5840AB-1	2 - K13
FB01-68-423 07	5840A -5	2 - G13
FB01-68-423 07	5840AB-1	2 - K13
FB01-68-423 10	5840A -5	2 - G13
FB01-68-423 10	5840AB-1	2 - K13
FB01-68-423 48	5840A -5	2 - G13
FB01-68-423 48	5840AB-1	2 - K13
FB01-68-425	5840A -1	2 - C13
FB01-68-425	5840AB-1	2 - K13
FB01-68-425 02	5840A -1	2 - C13
FB01-68-425 02	5840AB-1	2 - K13
FB01-68-425 04	5840A -1	2 - C13
FB01-68-425 04	5840AB-1	2 - K13
FB01-68-425 11	5840A -1	2 - C13
FB01-68-425 11	5840AB-1	2 - K13
FB01-68-425 48	5840A -1	2 - C13
FB01-68-425 48	5840AB-1	2 - K13
FB67-68-426	5840AB-2	2 - L13
FB01-68-427	5840A -7	2 - L13
FB01-68-427	5840AB-3	2 - M13
FB01-68-427 02	5840A -7	2 - L13
FB01-68-427 02	5840AB-3	2 - M13
FB01-68-427 04	5840A -7	2 - L13
FB01-68-427 04	5840AB-3	2 - M13
FB01-68-427 11	5840A -7	2 - L13
FB01-68-427 11	5840AB-3	2 - M13
FB01-68-427 48	5840A -7	2 - L13
FB01-68-427 48	5840AB-3	2 - M13
FB03-68-427	5840A -6	2 - H13
FB03-68-427 07	5840A -6	2 - H13
FB03-68-427 10	5840A -6	2 - H13
FB03-68-427 48	5840A -6	2 - H13
FB67-68-427	5840A -6	2 - H13
FB67-68-427	5840AB-2	2 - L13
FB67-68-427 02	5840A -6	2 - H13
FB67-68-427 02	5840AB-2	2 - L13
FB67-68-427 07	5840AB-2	2 - L13
FB67-68-427 10	5840A -6	2 - H13
FB67-68-427 48	5840A -6	2 - H13
FB67-68-427 48	5840AB-2	2 - L13
FB05-68-428	5840A -6	2 - G13
FB05-68-428	5840A -6	2 - H13
FB05-68-428	5840AB-2	2 - L13
FB03-68-429	5840A -6	2 - H13
FB03-68-429	5840AB-2	2 - L13
FB03-68-429 02	5840A -6	2 - H13
FB03-68-429 02	5840AB-2	2 - L13
FB03-68-429 07	5840A -6	2 - H13
FB03-68-429 07	5840AB-2	2 - L13
FB03-68-429 10	5840A -6	2 - H13
FB03-68-429 10	5840AB-2	2 - L13
FB03-68-429 48	5840A -6	2 - H13
FB03-68-429 48	5840AB-2	2 - L13
FB05-68-42X	5840A -6	2 - H13
FB05-68-42X	5840AB-2	2 - L13
FB05-68-42X 07	5840A -6	2 - H13
FB05-68-42X 07	5840AB-2	2 - L13
FB05-68-42X 09	5840A -6	2 - H13
FB05-68-42X 09	5840AB-2	2 - L13
FB05-68-42X 10	5840A -6	2 - H13
FB05-68-42X 10	5840AB-2	2 - L13
FB05-68-42X 48	5840A -6	2 - H13
FB05-68-42X 48	5840AB-2	2 - L13
FB05-68-42X 50	5840A -6	2 - H13
FB05-68-42X 50	5840AB-2	2 - L13
G033-68-432	5840A -6	2 - H13
G033-68-432	5840AB-2	2 - L13
FB01-68-44X	5840AB-2	2 - L13
FB01-68-44X 02	5840AB-2	2 - L13
FB01-68-44X 07	5840AB-2	2 - L13
FB01-68-44X 10	5840AB-2	2 - L13
FB01-68-44X 48	5840AB-2	2 - L13
FB02-68-450A	5840A -5	2 - G13
FB02-68-450A07	5840A -5	2 - G13

PART NUMBER INDEX

PART NUMBER	SECTION	LOCATION
FB02-68-450A10	5840A -5	2 - G13
FB02-68-450A48	5840A -5	2 - G13
FB03-68-450A	5840A -4	2 - F13
FB03-68-450A	5840A -3	2 - E13
FB03-68-450A07	5840A -4	2 - F13
FB03-68-450A10	5840A -4	2 - F13
FB03-68-450A48	5840A -4	2 - F13
FB04-68-450A	5840A -4	2 - F13
FB04-68-450A07	5840A -4	2 - F13
FB04-68-450A13	5840A -4	2 - F13
FB04-68-450A48	5840A -4	2 - F13
FB05-68-450B	5840A -3	2 - E13
FB05-68-450B07	5840A -3	2 - E13
FB05-68-450B10	5840A -3	2 - E13
FB05-68-450B50	5840A -3	2 - E13
FB06-68-450B	5840A -5	2 - G13
FB06-68-450B09	5840A -5	2 - G13
FB06-68-450B13	5840A -5	2 - G13
FB06-68-450B48	5840A -5	2 - G13
FB08-68-450	5840A -4	2 - F13
FB08-68-450 07	5840A -4	2 - F13
FB08-68-450 13	5840A -4	2 - F13
FB08-68-450 48	5840A -4	2 - F13
FB09-68-450	5840A -3	2 - E13
FB09-68-450 09	5840A -3	2 - E13
FB09-68-450 10	5840A -3	2 - E13
FB09-68-450 50	5840A -3	2 - E13
FB10-68-450	5840A -5	2 - G13
FB10-68-450 09	5840A -5	2 - G13
FB10-68-450 13	5840A -5	2 - G13
FB10-68-450 50	5840A -5	2 - G13
FB41-68-450	5840A -5	2 - G13
FB41-68-450 07	5840A -5	2 - G13
FB41 68-450 10	5840A -5	2 - G13
FB41-68-450 48	5840A -5	2 - G13
FB44-68-450A	5840A -5	2 - G13
FB44-68-450A07	5840A -5	2 - G13
FB44-68-450A10	5840A -5	2 - G13
FB44-68-450A49	5840A -5	2 - G13
FB45-68-450A	5840A -4	2 - F13
FB45-68-450A07	5840A -4	2 - F13
FB45-68-450A10	5840A -4	2 - F13
FB45-68-450A49	5840A -4	2 - F13
FB46-68-450B	5840A -4	2 - F13
FB46-68-450B07	5840A -4	2 - F13
FB46-68-450B10	5840A -4	2 - F13
FB46-68-450B48	5840A -4	2 - F13
FB60-68-450	5840A -4	2 - F13
FB60-68-450 07	5840A -4	2 - F13
FB60-68-450 10	5840A -4	2 - F13
FB60-68-450 49	5840A -4	2 - F13
FB61-68-450	5840A -4	2 - F13
FB61-68-450 09	5840A -4	2 - F13
FB61-68-450 10	5840A -5	2 - G13
FB61-68-450 50	5840A -5	2 - G13
FB67-68-450	5840AB-1	2 - K13
FB67-68-450 09	5840AB-1	2 - K13
FB67-68-450 50	5840AB-1	2 - K13
FB68-68-450	5840AB-1	2 - K13
FB68-68-450 09	5840AB-1	2 - K13
FB68-68-450 50	5840AB-1	2 - K13
FB79-68-450	5840A -5	2 - G13
FB79-68-450 02	5840A -5	2 - G13
FB67-68-452	5840AB-2	2 - L13
FB01-68-453	5840A -5	2 - G13
FB01-68-453	5840AB-1	2 - K13
FB01-68-453 02	5840A -5	2 - G13
FB01-68-453 02	5840AB-2	2 - L13
FB01-68-453 07	5840A -5	2 - G13
FB01-68-453 07	5840AB-2	2 - L13
FB01-68-453 10	5840A -5	2 - G13
FB01-68-453 10	5840AB-2	2 - L13
FB01-68-453 48	5840A -5	2 - G13
FB01-68-453 48	5840AB-2	2 - L13
FB67-68-456	5840AB-2	2 - L13
FB03-68-457	5840A -6	2 - H13
FB03-68-457 07	5840A -6	2 - H13
FB03-68-457 10	5840A -6	2 - H13
FB03-68-457 48	5840A -6	2 - H13
FB67-68-457	5840A -6	2 - H13
FB67-68-457	5840AB-2	2 - L13
FB67-68-457 02	5840A -6	2 - H13
FB67-68-457 02	5840AB-2	2 - L13
FB67-68-457 07	5840AB-2	2 - L13
FB67-68-457 10	5840A -6	2 - H13
FB67-68-457 48	5840A -6	2 - H13
FB67-68-457 48	5840AB-2	2 - L13
FB05-68-458	5840A -6	2 - H13
FB05-68-458	5840AB-2	2 - L13
FB03-68-459	5840A -6	2 - H13
FB03-68-459	5840AB-2	2 - L13
FB03-68-459 02	5840A -6	2 - H13
FB03-68-459 02	5840AB-2	2 - L13
FB03-68-459 07	5840A -6	2 - H13
FB03-68-459 07	5840AB-2	2 - L13
FB03-68-459 10	5840A -6	2 - H13
FB03-68-459 10	5840AB-2	2 - L13
FB03-68-459 48	5840A -6	2 - H13
FB03-68-459 48	5840AB-2	2 - L13
FB01-68-47X	5840A -6	2 - H13
FB01-68-47X	5840AB-2	2 L13
FB01-68-47X 02	5840A -6	2 - H13
FB01-68-47X 02	5840AB-3	2 M13
FB01-68-47X 07	5840A -6	2 - H13
FB01-68 47X 07	5840AB-3	2 - M13
FB01-68-47X 10	5840A -6	2 - H13
FB01-68-47X 10	5840AB-3	2 - M13
FB01-68-47X 48	5840A -6	2 - H13
FB01-68-47X 48	5840AB 3	2 - M13
FB67-68 505B	7250 -1	3 J 7
FB01-68-520A	7250 -1	3 - J 7
FB01-68-520A07	7250 -1	3 - J 7
FB01-68-520A10	7250 -1	3 - J 7
FB01-68-520A48	7250 -1	3 - J 7
FB67-68-520E	7250 -1	3 - J 7
FB67-68-520E07	7250 -1	3 - J 7
FB67-68-520E48	7250 -1	3 - J 7
FB67-68-523	7250 -1	3 - J 7
FB01-68-550A	7250 -1	3 - J 7
FB01-68-550A07	7250 -1	3 - J 7
FB01-68-550A10	7250 1	3 - J 7
FB01-68-550A48	7250 -1	3 - J 7
FB67-68-550E	7250 -1	3 - J 7
FB67-68-550E07	7250 -1	3 - J 7
FB67-68-550E48	7250 -1	3 - J 7
B100-68-615	5320 -1	2 - C 5
B100-68-615	6860A -1	3 - L 5
B100-68-615	6860AA-1	3 - C 6
B100-68-615	6860AB-1	3 - E 6
FB02-68-620A	6860A 1	3 - L 5
FB04-68-620A	6860A -1	3 - L 5
FB04-68-620A	6860AA-1	3 - C 6
FB67-68-620	6860AB-1	3 - E 6
FB01-68-622	6860A -1	3 - L 5
FB01-68-622	6860AA-1	3 - C 6
B001-68-625	5320 -1	2 - C 5
FB01-68-625	6860A -1	3 - L 5
FB01-68-625	6860AA-1	3 - C 6
FB01-68-632	6860A -1	3 - L 5
FB01-68-632	6860AA-1	3 - C 6
FB01-68-633	6860A -1	3 - L 5
FB01-68-633	6860AA-1	3 - C 6
FB01-68-636A	6860A -1	3 - L 5
FB01-68-636A	6860AA-1	3 - C 6
FB01-68-637	6860A -1	3 - L 5
FB01-68-637	6860AA-1	3 - C 6
FB01-68-642	6860A -1	3 - L 5
FB01-68-642	6860AA-1	3 - C 6
FB01-68-643	6860A -1	3 - L 5
FB01-68-643	6860AA-1	3 - C 6
FB01-68-646A	6860A -1	3 - L 5
FB01-68-646A	6860AA-1	3 - C 6
FB01-68-647	6860A -1	3 - L 5
FB01-68-647	6860AA-1	3 - C 6
FB01-68-652	6860A -1	3 - L 5
FB01-68-652	6860AA-1	3 - C 6
FB01-68-652	6860AB-1	3 E 6
FB01-68-653	6860A -1	3 - L 5
FB01-68-653	6860AA-1	3 - C 6
FB01-68-653	6860AB-1	3 - E 6
FB01-68-658	6860A -1	3 - L 5
FB03-68-658	6860A -1	3 - L 5
FB03-68-658	6860AA-1	3 - C 6
FB67-68-658	6860AB-1	3 - E 6
FO46-68-661B	6860AA-1	3 - C 6
FB03-68-661A	6860A -1	3 - L 5
FB03-68-661A	6860AB-1	3 - E 6
FO46-68-662A	6860AA-1	3 - C 6
FB01-68-663	6860A -1	3 - L 5
FB01-68-663	6860AB-1	3 - E 6
FB03-68-663	6860A -1	3 - L 5
FB03-68-663	6860AA-1	3 - C 6
FB01-68-664	6860A -1	3 - L 5
FB01-68-664	6860AB-1	3 - E 6
FB03-68-664	6860A -1	3 - L 5
FB03-68-664	6860AA-1	3 - C 6
FB67-68-665	6860AB-1	3 - E 6
FB03-68-666A	6860A -1	3 - L 5
FB03-68-666A	6860AA-1	3 - C 6
FB03-68-666A	6860AB-1	3 - E 6
FB03-68-667A	6860A -1	3 - L 5
FB03-68-667A	6860AA-1	3 - C 6
FB03-68-667A	6860AB-1	3 - E 6
FB01-68-668	6860A -1	3 - L 5
FB03-68-668	6860A 1	3 - L 5
F303-68-668	6860AA-1	3 - C 6
FB67-68-66Y	6860AB-1	3 - E 6
FB01-68-671B	6860A -1	3 - L 5
FBC1-68-671B07	6860A -1	3 - L 5
FB01-68-671B10	6860A -1	3 - L 5
FB01-68-671B48	6860A -1	3 - L 5
FB02-68-671B	6860A -1	3 - L 5
FB02-68-671B07	6860A -1	3 - L 5
FB02-68-671B10	6860A -1	3 L 5
FB02-68-671B48	6860A -1	3 - L 5
FB04-68-671C	6860A -1	3 - L 5
FB04-68-671C	6860AA-1	3 - C 6
FB04-68-671C07	6860A -1	3 - L 5
FB04-68-671C07	6860AA-1	3 - C 6
FB04-68-671C10	6860A -1	3 - L 5
FB04-68-671C10	6860AA-1	3 C 6
FB04-68-671C48	6860A -2	3 - M 5
FB04-68-671C48	6860AA-1	3 - C 6
FB05-68-671	6860A -2	3 - M 5
FB05-68-671 07	6860A -2	3 - M 5
FB05-68-671 10	6860A -2	3 - M 5
FB05-68-671 48	6860A -2	3 M 5
FB05-68-671A	6860AA-1	3 - C 6
FB05-68-671A07	6860AA-1	3 - C 6
FB05-68-671A10	6860AA-1	3 - C 6
FB05-68-671A48	6860AA-1	3 - C 6
FB67-68-671	6860AB-1	3 - E 6
FB67-68-671 07	6860AB-1	3 - E 6
FB67-68-671 48	6860AB-1	3 E 6
FB01-68-673	6860A -2	3 - M 5
FB01-68-673 07	6860A -2	3 - M 5
FB01-68-673 10	6860A -2	3 - M 5
FB01-68-673 48	6860A -2	3 - M 5
FB02-68-673	6860A -2	3 - M 5
FB02-68-673	6860AA-1	3 - C 6
FB02-68-673 07	6860A -2	3 - M 5
FB02-68-673 07	6860AA-1	3 - C 6
FB02-68-673 10	6860A -2	3 - M 5
FB02-68-673 10	6860AA-1	3 - C 6
FB02-68-673 48	6860A -2	3 - M 5
FB02-68-673 48	6860AA-1	3 - C 6
FB67-68-673	6860A -2	3 - M 5
FB67-68-673	6860AA-1	3 - C 6
FB67-68-673	6860AB-1	3 - E 6
FB67-68-673 07	6860A -2	3 - M 5
FB67-68-673 07	6860AA-1	3 - C 6
FB67-68-673 07	6860AB-1	3 - E 6
FB67-68-673 10	6860A -2	3 - M 5
FB67-68-673 10	6860AA-1	3 - C 6
FB67-68-673 10	6860AB-1	3 - E 6
FB67-68-673 48	6860A -2	3 - M 5
FB67-68-673 48	6860AA-1	3 - C 6
FB67-68-673 48	6860AB-1	3 - E 6
B100-68-675	6865AA-1	3 - H 6
B100-68-675 07	6865AA-1	3 - H 6
B100-68-675 48	6865AA-1	3 - H 6
FB01-68-678A	6860A -2	3 - M 5
FB01-68-678A	6860AA-1	3 - C 6
FB67-68-678	6860AB-1	3 - E 6
FB01-68-681A	6860A -2	3 - M 5
FB01-68-681A07	6860A -2	3 - M 5
FB01-68-681A10	6860A -2	3 - M 5
FB01-68-681A48	6860A -2	3 - M 5
FB67-68-681	6860AB-1	3 - E 6
FB67-68-681 07	6860AB-1	3 - E 6
FB67-68-681 48	6860AB-1	3 - E 6
FB01-68-691D	6860A -2	3 - M 5
FB01-68-691D	6860AA-2	3 - D 6
FB01-68-691D	6860AB-1	3 - E 6
FB01-68-691D09	6860A 2	3 - M 5
FB01-68-691D09	6860AA-2	3 - D 6
FB01-68-691D09	6860AB-1	3 - E 6
FB01-68-691D10	6860A -2	3 - M 5
FB01-68-691D10	6860AA-2	3 - D 6
FB01-68-691D10	6860AB-1	3 - E 6
FB01-68-691D48	6860A -2	3 - M 5
FB01-68-691D48	6860AA-2	3 - D 6
FB01-68-691D48	6860AB-1	3 - E 6
FB01-68-696	6860A -3	3 - N 5
FB01-68-696	6860AA-2	3 - D 6
FB01-68-696 07	6860A -3	3 - N 5
FB01 68-696 07	6860AA-2	3 - D 6
FB01-68-696 10	6860A 3	3 - N 5
FB01-68-696 10	6860AA-2	3 - D 6
FB01-68-696 48	6860A -3	3 N 5
FB01-68 696 48	6860AA-2	3 - D 6

PART NUMBER INDEX

PART NUMBER	SECTION	LOCATION
FB09-68-696B	6860A -3	3 - N 5
FB09-68-696B07	6860A -3	3 - N 5
FB09-68-696B10	6860A -3	3 - N 5
FB09-68-696B48	6860A -3	3 - N 5
FB01-68-69X	6860A -2	3 - M 5
FB03-68-69X	6860A -2	3 - M 5
FB03-68-69X 07	6860A -2	3 - M 5
FB03-68-69X 10	6860A -2	3 - M 5
FB03-68-69X 48	6860A -2	3 - M 5
FB07-68-69X	6860A -2	3 - M 5
FB07-68-69X	6860A -3	3 - N 5
FB07-68-69X	6860AA-2	3 - D 6
FB07-68-69X 07	6860A -3	3 - N 5
FB07-68-69X 07	6860AA-2	3 - D 6
FB07-68-69X 10	6860A -3	3 - N 5
FB07-68-69X 10	6860AA-2	3 - D 6
FB07-68-69X 48	6860A -3	3 - N 5
FB07-68-69X 48	6860AA-2	3 - D 6
FB40-68-69X	6860A -2	3 - M 5
FB40-68-69X 07	6860A -2	3 - M 5
FB40-68-69X 10	6860A -2	3 - M 5
FB40-68-69X 48	6860A -2	3 - M 5
FB01-68-710A	6840A -1	3 - F 5
FB01-68-710A02	6840A -1	3 - F 5
FB01-68-710A07	6840A -1	3 - F 5
FB01-68-710A10	6840A -1	3 - F 5
FB01-68-710A48	6840A -1	3 - F 5
FB67-68-710	6840AB-1	3 - J 5
FB67-68-710 07	6840AB-1	3 - J 5
FB67-68-710 48	6840AB-1	3 - J 5
B003-68-712	6840A -1	3 - F 5
B235-68-712	6840AB-1	3 - J 5
B235-68-719	6840AB-1	3 - J 5
FA54-68-719B	6820A -1	3 - D 5
FA54-68-719B	7250 -1	3 - J 7
FB01-68-719	7250 -1	3 - J 7
H001-68-719A	6820A -1	3 - D 5
H001-68-719A	6840A -1	3 - F 5
H001-68-719B	6840A -1	3 - F 5
FB01-68-720A	6840A -1	3 - F 5
FB01-68-720A02	6840A -1	3 - F 5
FB01-68-720A07	6840A -1	3 - F 5
FB01-68-720A10	6840A -1	3 - F 5
FB01-68-720A48	6840A -1	3 - F 5
FB67-68-720	6840AB-1	3 - J 5
FB67-68-720 07	6840AB-1	3 - J 5
FB67-68-720 48	6840AB-1	3 - J 5
UB39-68-805	5840A -7	2 - H3
UB39 68 805	5840AB 3	2 M13
FB67-68-810C	6860AB-1	3 E 6
FB67-68-810C07	6860AB 1	3 E 6
FB67-68-810C48	6860AB 1	3 E 6
FB67 68 812	6865AA-1	3 H 6
1011 68 815	5790A 1	2 H11
FB67 68 815	6860AB-1	3 E 6
FB67-68-821A	6860AB-1	3 - E 6
FB67-68-821A07	6860AB-1	3 - E 6
FB67-68-831B	6860AB-1	3 - E 6
FB67-68-831B07	6860AB-1	3 - E 6
FB67-68-832	6860AB-1	3 - E 6
FB67-68-845	6860AB-1	3 - E 6
FB67-68-845 07	6860AB-1	3 - E 6
FB67-68-845 48	6860AB-1	3 - E 6
FB01-68-852	6865A -1	3 - G 6
FB01-68-852	6865AA-1	3 - H 6
FB01-68-853	6840A -1	3 - F 5
FB02-68-853	6810 -1	3 - C 5
FB02-68-853	6840A -1	3 - F 5
FB01-68-85X	6840A -1	3 - F 5
FB01-68-85X	6840AB-1	3 - J 5
FB01-68-860	6840A -2	3 - G 5
FB01-68-860 02	6840A -2	3 - G 5
FB01-68-860 07	6840A -2	3 - G 5
FB01-68-860 10	6840A -2	3 - G 5
FB01-68-860 48	6840A -2	3 - G 5
FB67-68-861	6840AB-1	3 - J 5
FB67-68-861 07	6840AB-1	3 - J 5
FB03-68-862	6860A -3	3 - N 5
FB03-68-862	6860AA-2	3 - D 6
FB04-68-862	6860A -3	3 - N 5
FB04-68-862	6860AA-2	3 - D 6
FB05-68-862	6860A -3	3 - N 5
FB05-68-862	6860AA-2	3 - D 6
FB01-68-864	6860A -3	3 - N 5
FB01-68-864	6860AA-2	3 - D 6
FB01-68-864 07	6860A -3	3 - N 5
FB01-68-864 07	6860AA-2	3 - D 6
FB01-68-864 10	6860A -3	3 - N 5
FB01-68-864 10	6860AA-2	3 - D 6
FB01-68-864 48	6860A 3	3 - N 5
FB01-68-864 48	6860AA-2	3 - D 6
B003-68-865	6865A -1	3 - G 6
B003-68-865	6865AA-1	3 - H 6
B003-68-865 65	6865A -1	3 G 6
B003-68-865 65	6865AA-1	3 - H 6
B040-68-865A	6865A -1	3 - G 6
B040 68-865A09	6865A -1	3 - G 6
B040-68-865A11	6865A -1	3 - G 6
B040 68-865A48	6865A -1	3 - G 6
B040-68-865A96	6865A -1	3 - G 6
B235-68-865A	6865A -1	3 - G 6
B235-68-865A	6865AA-1	3 - H 6
FB67-68-865	6865AA-1	3 - H 6
FB67-68-865 09	6865AA-1	3 - H 6
G032-68-865A	6865A -1	3 G 6
G032-68-865A	6865AA-1	3 - H 6
G032-68-865A09	6865A -1	3 - G 6
G032 68-865A09	6865AA 1	3 - H 6
G032-68-865A11	6865A -1	3 - G 6
G032-68 865A11	6865AA-1	3 H 6
G032-68-865A48	6865A -1	3 - G 6
G032-68-865A48	6865AA-1	3 - H 6
G043-68-865B	6865A -1	3 - G 6
G043-68-865B	6865AA-1	3 - H 6
G043-68-865B09	6865A -1	3 - G 6
G043-68-865B09	6865AA-1	3 - H 6
G043-68-865B11	6865A -1	3 - G 6
G043-68-865B11	6865AA-1	3 - H 6
G043-68-865B48	6865A -1	3 - G 6
G043-68-865B48	6865AA-1	3 - H 6
G045-68-865	7800 -1	3 K 7
G045-68-865 00	7800 -1	3 - K 7
GJ12-68-865	6865AA-1	3 - H 6
H002-68-865	6865A -1	3 - G 6
H002-68-865	6865AA-1	3 - H 6
H003-68-865	6865A -1	3 - G 6
S049-68-865	5000 -1	2 - E 3
S049-68-865	6865A -1	3 - G 6
S049-68-865	6865AA-1	3 - H 6
S049-68-865 00	5000 -1	2 - E 3
S049-68-865 00	6865A -1	3 - G 6
S049-68-865 00	6865AA-1	3 - H 6
S049-68-865 09	5000 -1	2 - E 3
S049-68-865 09	6865A -1	3 - G 6
S049-68-865 09	6865AA-1	3 - H 6
S049-68-865 10	5000 -1	2 - E 3
S049-68-865 10	6865A -1	3 - G 6
S049-68-865 10	6865AA-1	3 - H 6
S049-68-865 48	5000 -1	2 - E 3
S049-68-865 48	6865A -1	3 - G 6
S049-68-865 48	6865AA-1	3 - H 6
S083-68-865A	6865A -1	3 - G 6
S083-68-865A	6865AA-1	3 - H 6
S083-68-865A09	6865A -1	3 - G 6
S083-68-865A09	6865AA-1	3 - H 6
S083-68-865A11	6865A -1	3 - G 6
S083-68-865A11	6865AA-1	3 - H 6
S083-68-865A48	6865A -1	3 - G 6
S083-68-865A48	6865AA-1	3 - H 6
FB01-68-866	6865A 1	3 - G 6
FB01-68-866	6865AA-1	3 - H 6
G031-68-866B	5830A -5	2 - G12
G031-68-866B	5830AA 2	2 - H2
G031-68-866B	6865A -1	3 - G 6
G031-68-866B	6865AA-1	3 - H 6
H003-68-866	6865A -1	3 - G 6
FB01-68-868	6840A -3	3 - H 5
FB01-68-868 02	6840A -3	3 - H 5
FB01-68-868 07	6840A -3	3 - H 5
FB01-68-868 10	6840A -3	3 - H 5
FB0 -68-868 48	6840A -3	3 H 5
FB03-68 868	6840A -3	3 - H 5
FB03 68-868 02	6840A -3	3 - H 5
FB03-68-868 07	6840A 3	3 H 5
FB03-68-868 10	6840A 3	3 - H 5
FB03-68-868 48	6840A -3	3 - H 5
FB01-68-86YB	6840A -1	3 - F 5
FB01-68-86YB07	6840A -1	3 - F 5
FB01-68-86YB10	6840A -1	3 - F 5
FB01-68-86YB48	6840A -1	3 - F 5
FB02-68-86YB	6840A -1	3 - F 5
FB02-68-86YB07	6840A -1	3 - F 5
FB02-68-86YB10	6840A -1	3 - F 5
FB02-68-86YB48	6840A -1	3 - F 5
FB05-68-86YA	6840A -1	3 - F 5
FB05-68-86YA07	6840A -1	3 - F 5
FB05-68-86YA10	6840A -2	3 - G 5
FB05-68-86YA48	6840A -2	3 - G 5
FB09-68-86YB	6840A -2	3 - G 5
FB09-68-86YB07	6840A -2	3 - G 5
FB09-68-86YB10	6840A -2	3 - G 5
FB09-68-86YB48	6840A -2	3 - G 5
FB10-68-86YB	6840A -2	3 - G 5
FB10-68-86YB07	6840A -2	3 - G 5
FB10-68-86YB10	6840A -2	3 - G 5
FB10-68-86YB48	6840A -2	3 - G 5
FB39-68-86YA	6840A -2	3 - G 5
FB39-68-86YA07	6840A -2	3 - G 5
FB39-68-86YA10	6840A -2	3 - G 5
FB39-68-86YA48	6840A -2	3 - G 5
FB01-68-870	6840A -2	3 - G 5
FB01-68-870 02	6840A -2	3 - G 5
FB01-68-870 07	6840A -2	3 - G 5
FB01-68-870 10	6840A -2	3 - G 5
FB01-68-870 48	6840A -2	3 - G 5
FB67-68-871	6840AB-1	3 - J 5
FB67-68 871 07	6840AB-1	3 - J 5
FB01-68-878	6840A -3	3 - H 5
FB01-68-878 02	6840A -3	3 - H 5
FB01-68-878 07	6840A -3	3 - H 5
FB01-68-878 10	6840A -3	3 - H 5
FB01-68-878 48	6840A -3	3 - H 5
FB03-68-878	6840A -3	3 - H 5
FB03-68-878 02	6840A -3	3 - H 5
FB03-68-878 07	6840A -3	3 - H 5
FB03-68-878 10	6840A -3	3 - H 5
FB03 68-878 48	6840A -3	3 - H 5
FB01-68-87YB	6840A -2	3 - G 5
FB01-68-87YB02	6840A -2	3 G 5
FB01-68-87YB07	6840A -2	3 - G 5
FB01-68-87YB10	6840A -2	3 - G 5
FB01-68-87YB48	6840A -2	3 - G 5
FB02-68-87YB	6840A -2	3 - G 5
FB02-68-87YB02	6840A -2	3 - G 5
FB02-68-87YB07	6840A -2	3 - G 5
FB02-68-87YB10	6840A -3	3 H 5
FB02-68-87YB48	6840A -3	3 - H 5
FB09-68-87Y6	6840A -3	3 H 5
FB09-68-87YB07	6840A -3	3 H 5
FB09-68-87YB10	6840A 3	3 - H 5
FB09-68-87YB48	6840A -3	3 - H 5
FB10-68-87YB	6840A -3	3 - H 5
FB10-68-87YB07	6840A -3	3 - H 5
FB10-68-87YB10	6840A -3	3 - H 5
FB10-68-87YB48	6840A -3	3 - H 5
G030-68-885B	6865A -1	3 - G 6
G030-68-885B	6865AA-2	3 - I 6
G030-68-885B00	6865A -1	3 - G 6
G030-68-885B00	6865AA-2	3 - I 6
GJ21-68-885A	6865AA-1	3 - H 6
GJ21-68-885A07	6865AA-1	3 - H 6
GJ21-68-885A48	6865AA-1	3 - H 6
UB54-68-885	6330A -1	2 - E15
UB54-68-885	6865A -1	3 - G 6
UB54-68-885	6865AA-2	3 - I 6
UB54-68-885 00	6330A -1	2 - E15
UB54-68-885 00	6865A -1	3 - G 6
UB54-68-885 00	6865AA-2	3 - I 6
UB54-68-885 07	6330A -1	2 - E15
UB54-68-885 07	6865A -1	3 - G 6
UB54-68-885 07	6865AA-2	3 - I 6
UB54-68-885 48	6330A -1	2 - E15
UB54-68-885 48	6865A -1	3 - G 6
UB54-68-885 48	6865AA-2	3 - I 6
FB67-68-891B	6840AB-1	3 - J 5
FB67-68-891B07	6840AB-1	3 - J 5
FB01-68-893	6860A -3	3 - N 5
FB01-68-893	6860AA-2	3 - D 6
FB01-68-893 07	6860A -3	3 - N 5
FB01-68-893 07	6860AA-2	3 - D 6
FB01-68-893 10	6860A -3	3 - N 5
FB01-68-893 10	6860AA-2	3 - D 6
FB01-68-893 48	6860A -3	3 - N 5
FB01-68-893 48	6860AA-2	3 - D 6
FB01-68-894B	6840A -3	3 - H 5
FB01-68-894B02	6840A -3	3 - H 5
FB01-68-894B07	6840A -3	3 - H 5
FB01-68-894B10	6840A -3	3 - H 5
FB01-68-894B48	6840A -3	3 - H 5
FB01-68-895B	6840A -3	3 - H 5
FB01-68-895B02	6840A -3	3 - H 5
FB01-68-895B07	6840A -3	3 - H 5
FB01-68-895B10	6840A -4	3 - I 5
FB01-68-895B48	6840A -4	3 - I 5
FB67-68-8C1	6860AB-1	3 - E 6
FB67-68-8C1 09	6860AB-2	3 - F 6
FB67-68-8C2	7250 -1	3 - J 7
FB01-68-911	5800A -1	2 - J11
FB01-68-911 07	5800A -1	2 J11
FB01-68-911 10	5800A -1	2 - J11
FB01-68-911 48	5800A 1	2 - J11
FB67-68-911A	5800AA-1	2 K11
FB67-68-911A07	5800AA-1	2 - K11
FB67-68-911A48	5800AA-1	2 K11
FB01-68-912	5800A -1	2 J11

PART NUMBER INDEX

PART NUMBER	SECTION	LOCATION
FB01-68-912 07	5800A -1	2 - J11
FB01-68-912 10	5800A -1	2 - J11
FB01-68-912 48	5800A -1	2 - J11
FB67-68-912A	5800AA-2	2 - L11
FB67-68-912A07	5800AA-2	2 - L11
FB67-68-912A48	5800AA-2	2 - L11
FB67-68-921	5800AA-2	2 - L11
FB67-68-921 07	5800AA-2	2 - L11
FB67-68-921 48	5800AA-2	2 - L11
FB67-68-922	5800AA-2	2 - L11
FB67-68-922 07	5800AA-2	2 - L11
FB67-68-922 48	5800AA-2	2 - L11
G030-68-964C	5840A -7	2 - I13
G030-68-964C	5840AB-3	2 - M13
G030-68-964C00	5840AB-3	2 - M13
G030-68-964C09	5840A -7	2 - I13
G030-68-964C11	5840A -7	2 - I13
G030-68-964C48	5840A -7	2 - I13
8595-69-011B	6930 -1	3 - H 7
FB67-69-013	6930 -1	3 - H 7
FB01-69-014A	6930 -1	3 - H 7
FB05-69-014A	6930 -1	3 - H 7
FB09-69-014	6930 -1	3 - H 7
FB39-69-014A	6930 -1	3 - H 7
FB44-69-014A	6930 -1	3 - H 7
N326-69-036A	6930 -1	3 - H 7
N326-69-036B	6930 -1	3 - H 7
N326-69-036C	6930 -1	3 - H 7
N326-69-036D	6930 -1	3 - H 7
N327-69-036A	6930 -1	3 - H 7
N327-69-036B	6930 -1	3 - H 7
N327-69-036C	6930 -1	3 - H 7
N327-69-036D	6930 -1	3 - H 7
N332-69-036	6930 -1	3 - H 7
N332-69-036A	6930 -1	3 - H 7
N334-69-036	6930 -1	3 - H 7
N334-69-036A	6930 -1	3 - H 7
N326-69-044	6930 -1	3 - H 7
N326-69-044A	6930 -1	3 - H 7
N326-69-044B	6930 -1	3 - H 7
N332-69-044	6930 -1	3 - H 7
N332-69-044A	6930 -1	3 - H 7
FA01-69-064	6930 -1	3 - H 7
FA01-69-064A	6930 -2	3 - I 7
FA01-69-064A	6930 -2	3 - I 7
FA03-69-064A	6930 -2	3 - I 7
UB40-69 065	6930 -1	3 - H 7
FA11-69-066A	6930 -1	3 - H 7
GA02 69-068	6930 -1	3 - H 7
FA02-69-073A	6930 -1	3 - H 7
F045 69 108A	6900A 3	3 - E 7
FB01-69 110A	6900A 1	3 - C 7
FB01 69 110B	6900A 1	3 - C 7
FB11 69 110C	6900A 1	3 - C 7
FB11-69 110D	6900A 1	3 - C 7
FB45-69-110	6900A -1	3 - C 7
FB45-69-110 1A	6900A -1	3 - C 7
FB45-69-110 3A	6900A -1	3 - C 7
FB45-69-110 5A	6900A -1	3 - C 7
FB45-69-110 J5	6900A -1	3 - C 7
FB45-69-110 K8	6900A -1	3 - C 7
FB45-69-110 NP	6900A -1	3 - C 7
FB45-69-110 PZ	6900A -1	3 - C 7
FB45-69-110 WU	6900A -1	3 - C 7
FB45-69-110A	6900A -1	3 - C 7
FB45-69-110A1A	6900A -1	3 - C 7
FB45-69-110A2H	6900A -1	3 - C 7
FB45-69-110A5A	6900A -1	3 - C 7
FB45-69-110AJ5	6900A -1	3 - C 7
FB45-69-110AK8	6900A -1	3 - C 7
FB45-69-110APZ	6900A -1	3 - C 7
FB45-69-110ARH	6900A -1	3 - C 7
FB45-69-110AUC	6900A -1	3 - C 7
FB45-69-110AWY	6900A -1	3 - C 7
FB45-69-170A	6900A 2	3 - D 7
FB45-69 170A1A	6900A -2	3 - D 7
FB45-69-170A2H	6900A 2	3 - D 7
FB45 69 170A5A	6900A 2	3 - D 7
FB45-69-170AJ5	6900A 2	3 - D 7
FB45-69 170AK8	6900A 2	3 D 7
FB45-69 170APZ	6900A 2	3 D 7
FB45 69 170ARH	6900A 2	3 D 7
FB45 69 170AUC	6900A 2	3 D 7
FB45-69 170AWY	6900A 2	3 D 7
FB45-69-170	6900A -2	3 - D 7
FB45-69-170 1A	6900A -2	3 - D 7
FB45-69-170 3A	6900A -2	3 - D 7
FB45-69-170 5A	6900A -2	3 - D 7
FB45-69-170 J5	6900A -2	3 - D 7
FB45-69-170 K8	6900A -2	3 - D 7
FB45-69-170 NP	6900A -2	3 - D 7
FB45-69-170 PZ	6900A -2	3 - D 7
FB45-69-170 WU	6900A -2	3 - D 7
F044-69-112A	6900A -2	3 - D 7
F045-69-112A	6900A -2	3 - D 7
FB01-69-113	6900A -3	3 - E 7
B095-69-114	6900A -3	3 - E 7
B095-69-115	6900A -3	3 - E 7
HA50-69-119	6900A -3	3 - E 7
FB01-69-123	6900A -3	3 - E 7
FB45-69-123	6900A -3	3 - E 7
F044-69-124A	6900A -3	3 - E 7
G032-69-126	6900A -1	3 - C 7
H140-69-126	6900A -1	3 - C 7
FB01-69-128	6900A -3	3 - E 7
FB01-69-170A	6900A -1	3 - C 7
FB01-69-170B	6900A -1	3 - C 7
FB11-69-170C	6900A -2	3 - D 7
FB11-69-170C	6900A -1	3 - C 7
FB11-69-170D	6900A -2	3 - D 7
FB45-69-170	6900A -2	3 - D 7
FB45-69-170 1A	6900A -2	3 - D 7
FB45-69-170 3A	6900A -2	3 - D 7
FB45-69-170 5A	6900A -2	3 - D 7
FB45-69-170 J5	6900A -2	3 - D 7
FB45-69-170 K8	6900A -2	3 - D 7
FB45-69-170 NP	6900A -2	3 - D 7
FB45-69-170 PZ	6900A -2	3 - D 7
FB45-69-170 WU	6900A -2	3 - D 7
FB45-69-170A	6900A 2	3 - D 7
FB45-69 170A1A	6900A -2	3 - D 7
FB45-69-170A2H	6900A 2	3 - D 7
FB45 69 170A5A	6900A 2	3 - D 7
FB45-69-170AJ5	6900A 2	3 - D 7
FB45-69 170AK8	6900A 2	3 D 7
FB45-69 170APZ	6900A 2	3 D 7
FB45 69 170ARH	6900A 2	3 D 7
FB45 69 170AUC	6900A 2	3 D 7
FB45-69 170AWY	6900A 2	3 D 7
F044-69-172A	6900A -2	3 - D 7
F045-69-172A	6900A -2	3 - D 7
FB01-69-173	6900A -2	3 - D 7
FB01-69-183	6900A -3	3 - E 7
FB45-69-183	6900A -3	3 - E 7
FC11-69-184A	6900A -3	3 - E 7
FB01-69-188	6900A -3	3 - E 7
FB35-69-220D	6900A -3	3 - E 7
FB35-69-220D00	6900A -3	3 - E 7
FB68-69-220B	6900A -3	3 - E 7
FB68-69-220B07	6900A -3	3 - E 7
FB68-69-220B48	6900A -3	3 - E 7
FB67-69-223	6900A -4	3 - F 7
FB10-69-240	6900A -4	3 - F 7
FB67-69-240	6900A -4	3 - F 7
FB67-69-240 07	6900A -4	3 - F 7
FB67-69-240 48	6900A -4	3 - F 7
FB10-69-244	6900A -4	3 - F 7
FB67-69-245	6900A -4	3 - F 7
FB67-69-247	6900A -4	3 - F 7
FB67-69-248	6900A -4	3 - F 7
FB01-69-261	6900A -4	3 - F 7
FB01-69-261 07	6900A -4	3 - F 7
FB01-69-261 10	6900A -4	3 - F 7
FB01-69-261 48	6900A -4	3 - F 7
FB03-69-261	6900A -4	3 - F 7
FB03-69-261 02	6900A -4	3 - F 7
FB03-69-261 07	6900A -4	3 - F 7
FB03-69-261 10	6900A -4	3 - F 7
FB03-69-261 48	6900A -4	3 - F 7
H260-69-261	6900A -4	3 - F 7
H260-69-261 07	6900A -4	3 - F 7
H260-69-261 10	6900A -4	3 - F 7
H260-69-261 48	6900A -4	3 - F 7
FB01-69 262	6900A -4	3 - F 7
FB01-69-262 07	6900A -4	3 - F 7
FB01-69-262 10	6900A -4	3 - F 7
FB01-69-262 48	6900A -5	3 - G 7
FB03-69-262	6900A -5	3 - G 7
FB03-69-262 02	6900A -5	3 - G 7
FB03-69-262 07	6900A -5	3 - G 7
FB03-69-262 10	6900A -5	3 - G 7
FB03-69-262 48	6900A -5	3 - G 7
FB02-69-270A	6900A -3	3 - E 7
FB02-69-270A07	6900A -3	3 - E 7
FB02-69-270A10	6900A -3	3 - E 7
FB02-69-270A48	6900A -3	3 - E 7
FB03-69-270A	6900A -3	3 - E 7
FB03-69 270A02	6900A -3	3 E 7
FB03-69 270A07	6900A -3	3 E 7
FB03 69 270A10	6900A -3	3 E 7
FB03 69 270A48	6900A 4	3 F 7
FB67 69 270A	6900A 4	3 F 7
FB67 69 270A07	6900A 4	3 F 7
FB67 69 270A48	6900A 4	3 F 7
FB33-69-320B	6900A -4	3 - F 7
FB33-69-320B02	6900A -4	3 - F 7
FB33-69-320B07	6900A -4	3 - F 7
FB33-69-320B10	6900A -4	3 - F 7
FB33-69-320B48	6900A -4	3 - F 7
FB34-69-320B	6900A -4	3 - F 7
FB34-69-320B07	6900A -4	3 - F 7
FB34-69-320B10	6900A -4	3 - F 7
FB34-69-320B48	6900A -4	3 - F 7
FB67-69-320A	6900A -4	3 - F 7
FB67-69-320A07	6900A -4	3 - F 7
FB67-69-320A48	6900A -4	3 - F 7
B316-69-361	5840A -7	2 - I13
B316-69-361	5840AB-3	2 - M13
H001-69-361	5840A -7	2 - I13
H001-69-361	5840AB-3	2 - M13
FB01-69-370	5840A -7	2 - I13
FB01-69-370	5840AB-3	2 - M13
FB01-69-370 02	5840A -7	2 - I13
FB01-69-370 02	5840AB-3	2 - M13
FB01-69-370 04	5840AB-3	2 - M13
FB01-69-370 07	5840A -7	2 - I13
FB01-69-370 10	5840A -7	2 - I13
FB01-69-370 11	5840AB-3	2 - M13
FB01-69-370 48	5840A -7	2 - I13
FB01-69-370 48	5840AB-3	2 - M13
FB02-69-370	5840A -7	2 - I13
FB02-69-370 02	5840A -7	2 - I13
FB02-69-370 07	5840A -7	2 - I13
FB02-69-370 10	5840A -7	2 - I13
FB02-69-370 48	5840A -7	2 - I13
BF70-69-372	5840A -7	2 - I13
BF70-69-372 02	5840A -7	2 - I13
BF70-69-372 07	5840A -7	2 - I13
BF70-69-372 10	5840A -7	2 - I13
BF70-69-372 48	5840A -7	2 - I13
FB01-69-390	5840A -7	2 - I13
FB01-69-390	5840AB-3	2 - M13
FB01-69-390 02	5840A -7	2 - I13
FB01-69-390 02	5840AB-3	2 - M13
FB01-69-390 04	5840AB-3	2 - M13
FB01-69-390 07	5840A -7	2 - I13
FB01-69-390 10	5840A -7	2 - I13
FB01-69-390 11	5840AB-3	2 - M13
FB01-69-390 48	5840A -7	2 - I13
FB01-69-390 48	5840AB-3	2 - M13
FB02-69-390	5840A -7	2 I13
FB02-69 390 02	5840A -7	2 I13
FB02-69-390 07	5840A -7	2 I13
FB02-69-390 10	5840A -7	2 I13
FB02 69 390 48	5840A -7	2 I13
BF70 69-392	5840A 8	2 J13
BF70 69-392 02	5840A 8	2 J13
BF70 69-392 07	5840A 8	2 J13
BF70-69 392 10	5840A 8	2 J13
BF70-69-392 48	5840A -8	2 - J13
FB01-69-531	6900A -5	3 - G 7
FB01-69-531 02	6900A -5	3 - G 7
FB01-69-531 07	6900A -5	3 - G 7
FB01-69-531 10	6900A -5	3 - G 7
FB01-69-531 48	6900A -5	3 - G 7
FB01-69-532	6900A -5	3 - G 7
FB31-69-532	6900A -5	3 - G 7
FB31-69-532 02	6900A -5	3 - G 7
FB31-69-532 07	6900A -5	3 - G 7
FB31-69-532 10	6900A -5	3 - G 7
FB31-69-532 48	6900A -5	3 - G 7
FB01-69-542	6900A -5	3 - G 7
9965-69-554	3700 -1	1 - E14
FA54-69-571	6900A -5	3 - G 7
FA54-69-571 00	6900A -5	3 - G 7
FA54-69-571 07	6900A -5	3 - G 7
FA54-69-571 10	6900A -5	3 - G 7
FA54-69-571 48	6900A -5	3 - G 7
FB67-69-571	6900A -5	3 - G 7
FA54-69-572	6900A -5	3 - G 7
FA54-69-572 00	6900A -5	3 - G 7
FA54-69-572 07	6900A -5	3 - G 7
FA54-69-572 10	6900A -5	3 - G 7
FA54-69-572 48	6900A -5	3 - G 7
FB67-69-572	6900A -5	3 - G 7
3781-69-650	6870 -1	3 - J 6
FB01-69-650A	6870 -1	3 - J 6
8173-69-670	6870 -1	3 - J 6
FB01-69-670A	6870 -1	3 - J 6
FB01 69 697A	6860A -3	3 - N 5
FB01-69-697A	6860AA-2	3 - D 6
FB01-69-697A	6860AB-2	3 - F 6
FB01-69-760	6845 -1	3 - K 5
FB01-69-760 07	6845 -1	3 - K 5
FB01-69-760 10	6845 -1	3 K 5
FB01-69-760 48	6845 -1	3 - K 5
FB01-69-762	6845 -1	3 - K 5
FB01-69-762 07	6845 -1	3 - K 5
FB01-69-762 10	6845 1	3 - K 5
FB01-69-762 48	6845 -1	3 - K 5
FB02-69-771	6845 -1	3 K 5
FB01-69-774	6845 -1	3 - K 5
FB01-69-774 07	6845 1	3 K 5
FB01-69-774 10	6845 -1	3 - K 5
FB01-69-774 48	6845 1	3 K 5
FB01-69-775	6845 1	3 K 5
FB01 69-775 07	6845 1	3 K 5
FB01 69 775 10	6845 1	3 K 5
FB01-69-775 48	6845 1	3 K 5
FB01 69 776	6845 1	3 K 5
FB01 69 777	6845 1	3 K 5
FB01 69 778	6845 1	3 K 5
FB01 69 780	6845 1	3 K 5
FB01 69 780 07	6845 1	3 K 5

PART NUMBER INDEX

PART NUMBER INDEX

PART NUMBER	SECTION	LOCATION
FB01-69-780 10	6845 -1	3 - K 5
FB01-69-780 48	6845 -1	3 - K 5
FB01-69-782	6845 -1	3 - K 5
FB01-69-782 07	6845 -1	3 - K 5
FB01-69-782 10	6845 -1	3 - K 5
FB01-69-782 48	6845 -1	3 - K 5
FB03-69-804	6330 -1	2 - C15
FB03-69-810H	6330 -1	2 - C15
FB03-69-831J	6330 -1	2 - C15
FB03-69-832A	6330 -1	2 - C15
FB03-69-833A	6330 -1	2 - C15
FB03-69-838C	6330 -1	2 - C15
FB03-69-839C	6330 -1	2 - C15
FB03-69-842A	6330 -1	2 - C15
FB03-69-843A	6330 -1	2 - C15
FB03-69-844A	6330 -1	2 - C15
FB03-69-845	6330 -1	2 - C15
FB03-69-846B	6330 -1	2 - C15
FB03-69-847B	6330 -1	2 - C15
FB03-69-848A	6330 -1	2 - C15
FB03-69-849	6330 -1	2 - C15
FB03-69-857	6330 -1	2 - C15
FB03-69-857A	6330 -1	2 - C15
FB03-69-858	6330 -1	2 - C15
FB03-69-860C	6330 -1	2 - C15
FB03-69-860C07	6330 -1	2 - C15
FB03-69-860C10	6330 -1	2 - C15
FB03-69-860C48	6330 -1	2 - C15
FB03-69-865	6330 -1	2 - C15
FB03-69-866	6330 -1	2 - C15
FB02-69-870A	5130 -1	2 - G 4
FB02-69-870A07	5130 -1	2 - G 4
FB02-69-870A10	5130 -1	2 - G 4
FB02-69-870A48	5130 -1	2 - G 4
FB03-69-870A	5130 -1	2 - G 4
FB03-69-870A07	5130 -1	2 - G 4
FB03-69-870A10	5130 -1	2 - G 4
FB03-69-870A48	5130 -1	2 - G 4
FB01-69-872	5130 -1	2 - G 4
FB01-69-872 07	5130 -1	2 - G 4
FB01-69-872 10	5130 -1	2 - G 4
FB01-69-872 48	5130 -1	2 - G 4
FB01-69-873	5130 -1	2 - G 4
FB03-69-873	6330 -1	2 - C15
FB01-69-874	5130 -1	2 - G 4
FB01-69-874	5130 -1	2 - G 4
FB01-69-87X	5130 -1	2 - G 4
FB01-69-87X	5130 -1	2 - G 4
FB03-69-885	6330 -1	2 - C15
FB03-69-891A	6330 -1	2 - C15
FB03-69-892A	6330 -2	2 - D15
FB03-69-895B	6330 -1	2 - C15
FB03-69-896A	6330 -1	2 - C15
FB03-69-897	6330 -1	2 - C15
FB03-69-898	6330 -1	2 - C15
FB03-69-898 07	6330 -1	2 - C15
FB03-69-898 10	6330 -1	2 - C15
FB03-69-898 48	6330 -2	2 - D15
FB03-69-915A	6330 -1	2 - C15
FB03-69-915A07	6330 -1	2 - C15
FB03-69-915A10	6330 -1	2 - C15
FB03-69-915A48	6330 -1	2 - C15
FB03-69-923	6330 -2	2 - D15
FB03-69-925A	6330 -2	2 - D15
FB03-69-927	6330 -2	2 - D15
FB03-69-928	6330 -1	2 - C15
FB03-69-982	6330 -1	2 - C15
FB03-69-9W4	6330 -2	2 - D15
FB03-69-9W5	6330 -2	2 - D15
FB03-69-9W6	6330 -2	2 - D15
FB03-69-9W7	6330 -2	2 - D15
FB03-69-9W8	6330 -2	2 - D15
FB03-69-9W9	6330 -2	2 - D15
FA11-69-C31	6930 -1	3 - H 7
UB40-69-C61	6930 -2	3 - I 7
FB01-69-D21A	6930 -1	3 - H 7
FB01-70-020	5340A -1	2 - F 5
FB67-70-020B	5340AA-1	2 - H 5
FB01-70-050C	5340A -1	2 - F 5
FB03-70-050C	5340A -1	2 - F 5
FB67-70-100G	5340AA-1	2 - H 5
FC11-70-100B	5340A -1	2 - F 5
FB01-70-112A	5340A -1	2 - F 5
FB01-70-112A	5340AA-1	2 - H 5
FB67-70-113	5340AA-1	2 - H 5
FC01-70-113	5340A -1	2 - F 5
FB01-70-114A	5340A -1	2 - F 5
FB67-70-114	5340AA-1	2 - H 5
FB01-70-118A	5340A -1	2 - F 5
FB01-70-118A	5340AA-1	2 - H 5
FB01-70-119A	5340A -1	2 - F 5
FB67-70-130D	5340AA-1	2 - H 5
FB67-70-150D	5340AA-1	2 - H 5
FC01-70-150B	5340A -1	2 - F 5
FB67-70-160B	5340AA-1	2 - H 5
FB67-70-169A	5340AA-1	2 - H 5
FBY4-70-200F	5340A -1	2 - F 5
FB01-70-210E	5340A -1	2 - F 5
FB67-70-210A	5340AA-2	2 - I 5
FBY1-70-210C	5340A -2	2 - G 5
FB01-70-220D	5340A -1	2 - F 5
FB67-70-220B	5340AA-2	2 - I 5
FB67-70-222A	5340AA-1	2 - H 5
FB67-70-230C	5340AA-1	2 - H 5
FB67-70-240A	5340AA-1	2 - H 5
FC11-70-240	5340A -1	2 - F 5
FB67-70-246B	5340AA-1	2 - H 5
FBY1-70-251	5340A -1	2 - F 5
FB67-70-260	5340AA-1	2 - H 5
FB67-70-270B	5340AA-1	2 - H 5
FBY1-70-271	5340A -1	2 - F 5
FBY1-70-271A	5340A -1	2 - F 5
FB67-70-272	5340AA-1	2 - H 5
FB01-70-273	5340A -1	2 - F 5
FB01-70-321A	5340A -1	2 - F 5
FBY4-70-400E	5340A -2	2 - G 5
FC33-70-400	5340AA-2	2 - I 5
FB67-70-420	5340AA-1	2 - H 5
FB67-70-441A	5340AA-2	2 - I 5
FB67-70-491A	5340AA-2	2 - I 5
FB67-70-500D	5340AA-2	2 - I 5
FB67-70-512	5340AA-2	2 - I 5
FC01-70-601	5360A -1	2 - K 5
FC03-70-601	5360A -1	2 - K 5
FB01-70-609A	5360A -1	2 - K 5
FB01-70-610L	5330 -1	2 - E 5
FB67-70-610E	5330 -1	2 - E 5
FB01-70-613B	5330 -1	2 - E 5
FB03-70-630E	5360A -1	2 - K 5
FB67-70-631B	5340AA-2	2 - I 5
FB01-70-640A	5360A -1	2 - K 5
FB67-70-640A	5340AA-2	2 - I 5
FB67-70-654	5340AA-2	2 - I 5
FB67-70-690A	5340AA-2	2 - I 5
FB01-70-700C	5360A -1	2 - K 5
FB67-70-750C	5340AA-2	2 - I 5
FB67-70-752	5340AA-2	2 - I 5
FB01-70-760C	5340A -1	2 - F 5
FB01-70-77X	5340A -1	2 - F 5
FC01-70-75X0	5340A -1	2 - F 5
FB01-71-020	5340A -2	2 - G 5
FB67-71-020B	5340AA-2	2 - I 5
FB01-71-050C	5340A -1	2 - F 5
FC03-71-050	5340A -1	2 - F 5
FC11-71-100B	5340A -1	2 - F 5
FC33-71-100A	5340AA-2	2 - I 5
FB01-71-112D	5340A -1	2 - F 5
FB01-71-112D	5340AA-2	2 - I 5
FB01-71-113A	5340A -1	2 - F 5
FB67-71-113	5340AA-2	2 - I 5
FB01-71-114A	5340A -1	2 - F 5
FB01-71-114A	5340A -2	2 - G 5
FB67-71-114	5340AA-2	2 - I 5
FB01-71-118A	5340A -2	2 - G 5
FB01-71-118A	5340AA-2	2 - I 5
FB01-71-119A	5340A -2	2 - G 5
FB67-71-130D	5340AA-2	2 - I 5
FB67-71-150B	5340AA-2	2 - I 5
FC01-71-150A	5340A -2	2 - G 5
FB67-71-160B	5340AA-2	2 - I 5
FB67-71-169A	5340AA-2	2 - I 5
FBY4-71-200D	5340A -2	2 - G 5
FB01-71-210F	5340A -1	2 - F 5
FB67-71-210A	5340AA-3	2 - J 5
FBY1-71-210C	5340A -2	2 - G 5
FB01-71-220D	5340A -2	2 - G 5
FB67-71-220B	5340AA-3	2 - J 5
FB67-71-222A	5340AA-2	2 - I 5
FB67-71-230C	5340AA-2	2 - I 5
FB67-71-240A	5340AA-2	2 - I 5
FC11-71-240	5340A -2	2 - G 5
FB67-71-246B	5340AA-1	2 - H 5
FBY1-71-251	5340A -2	2 - G 5
FB67-71-260	5340AA-2	2 - I 5
FB67-71-270B	5340AA-2	2 - I 5
FBY1-71-271	5340A -2	2 - G 5
FBY1-71-271A	5340A -2	2 - G 5
FB67-71-272	5340AA-2	2 - I 5
FB01-71-273	5340A -2	2 - G 5
FB01-71-321A	5340A -2	2 - G 5
FB67-71-400G	5340AA-3	2 - J 5
FBY4-71-400C	5340A -2	2 - G 5
FB67-71-420	5340AA-2	2 - I 5
FB67-71-441A	5340AA-2	2 - I 5
FB67-71-491A	5340AA-2	2 - I 5
FB67-71-512	5340AA-2	2 - I 5
FB01-71-613B	5330 -1	2 - E 5
FB67-71-654	5340AA-2	2 - I 5
FB67-71-690A	5340AA-2	2 - I 5
FB01-71-760B	5340A -2	2 - G 5
FB01-71-771A	5340A -2	2 - G 5
H043-72-411	5830A -1	2 - C12
H043-72-411	5830AA-1	2 - H12
1907-75-102A	5540 -1	2 - M 6
1907-75-102A	5540A -1	2 - C 7
1907-75-102A	5540B -1	2 - E 7
FB01-75-942	5040A -1	2 - I 3
FB01-75-943	5040A -1	2 - I 3
0208-76-071	6860AB-2	3 - F 6
FB02-76-190	0900A -2	2 - D 3
FA55-76-196	6115 -1	2 - D14
HA43-76-201A	0900A -1	2 - C 3
HA43-76-201A	0900A -2	2 - D 3
HA43-76-202	0900A -1	2 - C 3
HA43-76-202	0900A -1	2 - C 3
FB01-76-210B	0900A -1	2 - C 3
FB01-76-220B	0900A -1	2 - C 3
FB68-76-230	0900A -1	2 - C 3
FB01-76-250	0900A -1	2 - C 3
FB01-76-250 07	0900A -1	2 - C 3
FB01-76-250 10	0900A -1	2 - C 3
FB01-76-250 48	0900A -1	2 - C 3
FB02-76-250	0900A -1	2 - C 3
FB02-76-250 07	0900A -1	2 - C 3
FB02-76-250 10	0900A -1	2 - C 3
FB02-76-250 48	0900A -1	2 - C 3
FB01-76-260	0900A -1	2 - C 3
FB01-76-290	0900A -1	2 - C 3
G030-76-448	5830A -5	2 - G12
G030-76-448	5830AA-2	2 - I12
G030-76-448	6230 -2	2 - M14
FA55-76-455	6120 -1	2 - E14
8871-76-456	6120 -1	2 - E14
FA55-76-474	6120 -1	2 - E14
D001-76-605	6750 -1	3 - K 4
B002-76-619A	6760 -1	3 - L 4
H043-76-619A	6740 -1	3 - J 4
B093-76-641	6750 -1	3 - K 4
8532-76-672	6750 -1	3 - K 4
G030-76-673A	6750 -1	3 - K 4
0000-78-202	3700 -1	1 - E14
0000-78-0208	3700A -1	1 - H14
0000-78-559	3700 -1	1 - E14
0000-78-850	3700 -1	1 - E14
0000-78-5755	3700 -1	1 - E14
0000-78-5755	3700A -1	1 - H14
000-80-126F	1850B -1	1 - J 8
9935-80-8999	4500B -1	1 - G16
9935-80-8999	4500BA-1	1 - H16
0000-81-56BX-01	6682 -2	3 - D 3
0000-81-56SP-01	6682 -2	3 - D 3
0000-81-580T	6680 -3	2 - K16
0000-81-805B	6680 -3	2 - K16
0000-81-903B	6680 -3	2 - K16
0000-81-930A	6682 -2	3 - D 3
0000-81-1022	6682 -2	3 - D 3
0000-81-1023	6682 -2	3 - D 3
0000-81-1024	6682 -2	3 - D 3
0000-81-2101	6680 -4	2 - L16
0000-81-4103	6680 -3	2 - K16
0000-81-5101	6680 -3	2 - K16
0000-81-5101-KT	6680 -3	2 - K16
0000-81-5101-KB	6680 -3	2 - K16
0000-81-5101-KB	6680 -3	2 - K16
0000-81-5101-KT	6680 -3	2 - K16
0000-81-5101-KT	6680 -4	2 - L16
0000-81-5217-01	6682 -2	3 - D 3
0000-81-5612-01	6682 -2	3 - D 3
0000-81-5613-01	6682 -2	3 - D 3
0000-81-5622-01	6682 -2	3 - D 3
0000-81-5792	6680 -3	2 - K16
0000-81-5822	5700AC-3	2 - H10
0000-81-5823	5700AC-3	2 - H10
0000-81-6021	6682 -2	3 - D 3
0000-81-6022	6682 -2	3 - D 3
0000-81-6102	6680 -4	2 - L16
0000-81-6110	6680 -3	2 - K16
0000-81-8052	6680 -3	2 - K16
0000-81-8102	6680 -3	2 - K16
0000-81-9035-KB	6680 -3	2 - K16
0000-81-9035-KB	6680 -4	2 - L16
0000-81-9035-KT	6680 -3	2 - K16
0000-81-9035-KB	6680 -3	2 - K16
0000-81-9035-KT	6680 -3	2 - K16
0000-81-9035-KT	6680 -3	2 - K16

PART NUMBER INDEX

PART NUMBER	SECTION	LOCATION
0000-81-9105	6680 -3	2 - K16
0000-81-9105	6680 -3	2 - K16
0000-81-?301	6682 -2	3 - D 3
B001-88-081	5700A -4	2 - F 8
B001-88-081	5700AA-9	2 - K 9
B001-88-081	5700AB-2	2 - D10
B001-88-081	5700AC-3	2 - H10
B001-88-081 09	5700A -4	2 - F 8
B001-88-081 09	5700AA-9	2 - K 9
B001-88-081 09	5700AB-2	2 - D10
B001-88-081 09	5700AC-3	2 - H10
B001-88-081 10	5700A -4	2 - F 8
B001-88-081 10	5700AA-9	2 - K 9
B001-88-081 48	5700A -4	2 - F 8
B001-88-081 48	5700AA-9	2 - K 9
B001-88-081 48	5700AB-2	2 - D10
B001-88-081 48	5700AC-3	2 - H10
B001-88-091	5700A -4	2 - F 8
B001-88-091	5700AA-9	2 - K 9
B001-88-091	5700AB-2	2 - D10
B001-88-091	5700AC-3	2 - H10
B001-88-091 09	5700A -4	2 - F 8
B001-88-091 09	5700AA-9	2 - K 9
B001-88-091 09	5700AB-2	2 - D10
B001-88-091 09	5700AC-3	2 - H10
B001-88-091 10	5700A -4	2 - F 8
B001-88-091 10	5700AA-9	2 - K 9
B001-88-091 48	5700A -4	2 - F 8
B001-88-091 48	5700AA-9	2 - K 9
B001-88-091 48	5700AB-2	2 - D10
B001-88-091 48	5700AC-3	2 - H10
BF80-88-101	5700A -4	2 - F 8
BF80-88-101	5700AA-9	2 - K 9
BF82-88-101	5700A -4	2 - F 8
BF82-88-101	5700AA-9	2 - K 9
FB01-88-101	5700A -4	2 - F 8
FB01-88-101	5700AA-9	2 - K 9
FB01-88-101	5700AB-2	2 - D10
FB01-88-101	5700AC-3	2 - H10
FB01-88-102B	5700A -4	2 - F 8
FB01-88-102B	5700AA-9	2 - K 9
FB04-88-102B	5700A -4	2 - F 8
FB04-88-102B	5700AA-9	2 - K 9
FB67-88-102	5700AB-2	2 - D10
FB67-88-102	5700AC-3	2 - H10
FB01-88-103B	5700A -4	2 - F 8
FB01-88-103B	5700AA-9	2 - K 9
FB01-88-103B	5700AB-2	2 - D10
FB01-88-103B	5700AC-3	2 - H10
FB01-88-105	5700A -4	2 - F 8
FB01-88-105	5700AA-9	2 - K 9
FB01-88-105	5700AB-2	2 - D10
FB01-88-105	5700AC-3	2 - H10
FB68-88-105	5700AB-2	2 - D10
FB01-88-106	5700A -4	2 - F 8
FB01-88-106	5700AA-10	2 - L 9
FB01-88-106	5700AB-2	2 - D10
FB01-88-106	5700AC-3	2 - H10
F032-88-107	5700A -4	2 - F 8
F032-88-107	5700AA-9	2 - K 9
FB01-88-107	5700A -4	2 - F 8
FB01-88-107	5700AA-9	2 - K 9
FB01-88-107	5700AB-2	2 - D10
FB68-88-107	5700AB-2	2 - D10
FB68-88-107	5700AC-3	2 - H10
H115-88-108	5700A -4	2 - F 8
H115-88-108	5700AB-2	2 - D10
H115-88-108	5700AC-3	2 - H10
8643-88-109	5700A -4	2 - F 8
8643-88-109	5700AA-10	2 - L 9
B095-88-109	5700A -4	2 - F 8
B095-88-109	5700AA-10	2 - L 9
B095-88-109	5700AB-2	2 - D10
B095-88-109	5700AC-3	2 - H10
FB04-88-109	5700A -4	2 - F 8
FB04-88-109	5700AA-9	2 - K 9
FB44-88-109	5700A -4	2 - F 8
FB44-88-109	5700AA-9	2 - K 9
FB44-88-109	5700AC-3	2 - H10
FB02-88-110A	5700A -5	2 - G 8
FB02-88-110A07	5700A -5	2 - G 8
FB02-88-110A10	5700A -5	2 - G 8
FB02-88-110A48	5700A -5	2 - G 8
FB03-88-110A	5700A -5	2 - G 8
FB03-88-110A07	5700A -5	2 - G 8
FB03-88-110A10	5700A -5	2 - G 8
FB03-88-110A48	5700A -5	2 - G 8
FB41-88-110A	5700AA-10	2 - L 9
FB41-88-110A07	5700AA-10	2 - L 9
FB41-88-110A10	5700AA-10	2 - L 9
FB41-88-110A48	5700AA-10	2 - L 9
FB44-88-110	5700A -4	2 - F 8
FB44-88-110 07	5700A -4	2 - F 8
FB44-88-110 10	5700A -5	2 - G 8
FB44-88-110 48	5700A -5	2 - G 8
FB67-88-110	5700AB-2	2 - D10
FB67-88-110 07	5700AB-2	2 - D10
FB67-88-110 48	5700AB-2	2 - D10
FB68-88-110	5700AC-3	2 - H10
FB68-88-110 07	5700AC-3	2 - H10
FB68-88-110 48	5700AC-3	2 - H10
FB02-88-111	5700A -5	2 - G 8
FB02-88-111 07	5700A -5	2 - G 8
FB02-88-111 10	5700A -5	2 - G 8
FB02-88-111 48	5700A -5	2 - G 8
FB03-88-111	5700A -5	2 - G 8
FB03-88-111 07	5700A -5	2 - G 8
FB03-88-111 10	5700A -5	2 - G 8
FB03 88-111 48	5700A -5	2 - G 8
FB10-88-111	5700AA-10	2 - L 9
FB10-88-111 07	5700AA-10	2 - L 9
FB10-88-111 10	5700AA-10	2 - L 9
FB10-88-111 48	5700AA-10	2 - L 9
FB44-88-111	5700A -5	2 - G 8
FB44-88-111 07	5700A -5	2 - G 8
FB44-88-111 10	5700A -5	2 - G 8
FB44-88-111 48	5700A -5	2 - G 8
FB45-88-111	5700AA-10	2 - L 9
FB45-88-111 09	5700AA-10	2 - L 9
FB45-88-111 13	5700AA-10	2 - L 9
FB45-88-111 49	5700AA-10	2 - L 9
FB46-88-111	5700AA-10	2 - L 9
FB46-88-111 09	5700AA-10	2 - L 9
FB46-88-111 13	5700AA-10	2 - L 9
FB46-88-111 49	5700AA-10	2 - L 9
FB67-88-111	5700AB-2	2 - D10
FB67-88-111 07	5700AB-2	2 - D10
FB67-88-111 48	5700AB-2	2 - D10
FB68-88-111	5700AC-3	2 - H10
FB68-88-111 07	5700AC-3	2 - H10
FB68-88-111 48	5700AC-3	2 - H10
1243-88-117	5700A -5	2 - G 8
1243-88-117	5700AA-10	2 - L 9
1243-88-117	5700AB-2	2 - D10
1243-88-117	5700AC-3	2 - H10
F044-88-127A	5700A -5	2 - G 8
F044-88-127A	5700AA-10	2 - L 9
F044-88-127A	5700AB-2	2 - D10
F044-88-127A	5700AC-3	2 - H10
F044-88-127A07	5700A -5	2 - G 8
F044-88-127A07	5700AA-10	2 - L 9
F044-88-127A07	5700AB-2	2 - D10
F044-88-127A07	5700AC-3	2 - H10
F044-88-127A10	5700A -5	2 - G 8
F044-88-127A10	5700AA-10	2 - L 9
F044-88-127A48	5700A -5	2 - G 8
F044-88-127A48	5700AA-10	2 - L 9
F044-88-127A48	5700AB-2	2 - D10
F044-88-127A48	5700AC-3	2 - H10
FB02-88-130	5700A -6	2 - H 8
FB02-88-130 07	5700A -6	2 - H 8
FB02-88-130 10	5700A -6	2 - H 8
FB02-88-130 48	5700A -6	2 - H 8
FB03-88-130	5700A -5	2 - G 8
FB03-88-130 07	5700A -5	2 - G 8
FB03-88-130 10	5700A -5	2 - G 8
FB03-88-130 48	5700A -5	2 - G 8
FB04-88-130	5700A -5	2 - G 8
FB04-88-130 07	5700A -5	2 - G 8
FB04-88-130 10	5700A -5	2 - G 8
FB04-88-130 48	5700A -5	2 - G 8
FB08-88-130	5700A -6	2 - H 8
FB08-88-130 07	5700A -6	2 - H 8
FB08-88-130 10	5700A -6	2 - H 8
FB08-88-130 48	5700A -6	2 - H 8
FB10-88-130	5700AA-10	2 - L 9
FB10-88-130 07	5700AA-10	2 - L 9
FB10-88-130 10	5700AA-10	2 - L 9
FB10-88-130 48	5700AA-10	2 - L 9
FB11-88-130	5700AA-10	2 - L 9
FB11-88-130 07	5700AA-10	2 - L 9
FB11-88-130 10	5700AA-10	2 - L 9
FB11-88-130 48	5700AA-10	2 - L 9
FB44-88-130	5700A -5	2 - G 8
FB44-88-130	5700A -6	2 - H 8
FB44-88-130 07	5700A -6	2 - H 8
FB44-88-130 10	5700A -6	2 - H 8
FB44-88-130 48	5700A -6	2 - H 8
FB45-88-130	5700AA-10	2 - L 9
FB45-88-130 09	5700AA-10	2 - L 9
FB45-88-130 13	5700AA-10	2 - L 9
FB45-88-130 49	5700AA-10	2 - L 9
FB67-88-130	5700AB-2	2 - D10
FB67-88-130 07	5700AB-2	2 - D10
FB67-88-130 48	5700AB-2	2 - D10
FB68-88-130	5700AC-3	2 - H10
FB68-88-130 07	5700AC-3	2 - H10
FB68-88-130 48	5700AC-4	2 - 110
FA58-88-131	5700AA-11	2 - M 9
FA58-88-131 07	5700AA-11	2 - M 9
FA58-88-131 10	5700AA-11	2 - M 9
FA58-88-131 48	5700AA-11	2 - M 9
FB02-88 131	5700A -6	2 - H 8
FB02-88-131 07	5700A -6	2 - H 8
FB02-88-131 10	5700A -6	2 - H 8
FB02-88-131 48	5700A -6	2 - H 8
FB03-88-131	5700A -6	2 - H 8
FB03-88-131 07	5700A -6	2 - H 8
FB03-88-131 10	5700A -6	2 - H 8
FB03-88-131 48	5700A -6	2 - H 8
FB10-88-131	5700AA-10	2 - L 9
FB10-88-131 07	5700AA-11	2 - M 9
FB10-88-131 10	5700AA-11	2 - M 9
FB10-88-131 48	5700AA-11	2 - M 9
FB44-88-131	5700A -6	2 - H 8
FB44-88-131 07	5700A -6	2 - H 8
FB44-88-131 10	5700A -6	2 - H 8
FB44-88-131 48	5700A -6	2 - H 8
FB45-88-131	5700AA-11	2 - M 9
FB45-88-131 09	5700AA-11	2 - M 9
FB45-88-131 13	5700AA-11	2 - M 9
FB45-88-131 49	5700AA-11	2 - M 9
FB67-88-131	5700AB-2	2 - D10
FB67-88-131 07	5700AB-3	2 - E10
FB67-88-131 48	5700AB-3	2 - E10
FB68-88-131	5700AC-4	2 - 110
FB68-88-131 07	5700AC-4	2 - 110
FB68-88-131 48	5700AC-4	2 - 110
FB68-88-134	5700AC-4	2 - 110
FB68-88-134 07	5700AC-4	2 - 110
FB68-88-134 48	5700AC-4	2 - 110
FB03-88-140	5700A -4	2 - F 8
FB03-88-140 07	5700A -4	2 - F 8
FB03-88-140 10	5700A -4	2 - F 8
FB03-88-140 48	5700A -4	2 - F 8
FB10-88-140	5700AA-9	2 - K 9
FB10-88-140 07	5700AA-9	2 - K 9
FB10-88-140 10	5700AA-9	2 - K 9
FB10-88-140 48	5700AA-9	2 - K 9
FB67-88-140	5700AB-2	2 - D10
FB67-88-140 07	5700AB-2	2 - D10
FB67-88-140 48	5700AB-2	2 - D10
FB68-88-140	5700AC-3	2 - H10
FB68-88-140 07	5700AC-3	2 - H10
FB68-88-140 48	5700AC-3	2 - H10
BF80-88-151	5700A -6	2 - H 8
BF80-88-151	5700AA-11	2 - M 9
FB01-88-151	5700A -6	2 - H 8
FB01-88-151	5700AA-11	2 - M 9
FB01-88-151	5700AB-3	2 - E10
FB01-88-151	5700AC-4	2 - 110
FB01-88-152B	5700A -6	2 - H 8
FB01-88-152B	5700AA-11	2 - M 9
FB01-88-152B	5700AB-3	2 - E10
FB01-88-152B	5700AC-4	2 - 110
FB01-88-153B	5700A -6	2 - H 8
FB01-88-153B	5700AA-11	2 - M 9
FB67-88-153	5700AB-3	2 - E10
FB67-88-153	5700AC-4	2 - 110
FB02-88-160A	5700A -7	2 - I 8
FB02-88-160A07	5700A -7	2 - I 8
FB02-88-160A10	5700A -7	2 - I 8
FB02-88-160A48	5700A -7	2 - I 8
FB03-88-160A	5700A -7	2 - I 8
FB03-88-160A07	5700A -7	2 - I 8
FB03-88-160A10	5700A -7	2 - I 8
FB03-88-160A48	5700A -7	2 - I 8
FB41-88-160A	5700AA-11	2 - M 9
FB41-88-160A07	5700AA-11	2 - M 9
FB41-88-160A10	5700AA-11	2 - M 9
FB41-88-160A48	5700AA-11	2 - M 9
FB44-88-160	5700A -6	2 - H 8
FB44-88-160 07	5700A -7	2 - I 8
FB44-88-160 10	5700A -7	2 - I 8
FB44-88-160 48	5700A -7	2 - I 8
FB45-88-160	5700AA-11	2 - M 9
FB45-88-160 09	5700AA-11	2 - M 9
FB45-88-160 13	5700AA-11	2 - M 9
FB45-88-160 49	5700AA-11	2 - M 9
FB67-88-160	5700AB-3	2 - E10
FB67-88-160 07	5700AB-3	2 - E10
FB67-88-160 48	5700AB-3	2 - E10
FB68-88-160	5700AC-4	2 - 110
FB68-88-160 07	5700AC-4	2 - 110
FB68-88-160 48	5700AC-4	2 - 110

PART NUMBER INDEX

PART NUMBER	SECTION	LOCATION
FB02-88-161	5700A -7	2 - I 8
FB02-88-161 07	5700A -7	2 - I 8
FB02-88-161 10	5700A -7	2 - I 8
FB02-88-161 48	5700A -7	2 - I 8
FB03-88-161	5700A -7	2 - I 8
FB03-88-161 07	5700A -7	2 - I 8
FB03-88-161 10	5700A -7	2 - I 8
FB03-88-161 48	5700A -7	2 - I 8
FB10-88-161	5700AA-11	2 - M 9
FB10-88-161 07	5700AA-11	2 - M 9
FB10-88-161 10	5700AA-11	2 - M 9
FB10-88-161 48	5700AA-11	2 - M 9
FB44 88-161	5700A -7	2 - I 8
FB44-88-161 07	5700A -7	2 - I 8
FB44-88-161 10	5700A -7	2 - I 8
FB44-88-161 48	5700A -7	2 - I 8
FB45-38-161	5700AA-11	2 - M 9
FB45-88-161 09	5700AA-11	2 - M 9
FB45-88-161 13	5700AA-11	2 - M 9
FB45-88-161 49	5700AA-11	2 - M 9
FB67-88-161	5700AB-3	2 - E10
FB67-88-161 07	5700AB-3	2 - E10
FB67-88-161 48	5700AB-3	2 - E10
FB68-88-161	5700AC-4	2 - I10
FB68-88-161 07	5700AC-4	2 - I10
FB68-88-161 48	5700AC-4	2 - I10
F044-88-177A	5700A -7	2 - I 8
F044-88-177A	5700AA-11	2 - M 9
F044-88-177A	5700AC-4	2 - I10
F044-88-177A07	5700A -7	2 - I 8
F044-88-177A07	5700AA-12	2 - N 9
F044-88-177A07	5700AC-4	2 - I10
F044-88-177A10	5700A -7	2 - I 8
F044-88-177A10	5700A -12	2 - N 9
F044-88-177A48	5700A -7	2 - I 8
F044-88-177A48	5700AA-12	2 - N 9
F044-88-177A48	5700AC-4	2 - I10
FB03-88-177A	5700A -7	2 - I 8
FB03-88-177A	5700AA-11	2 - M 9
FB03-88-177A	5700AB-3	2 - E10
FB03-88-177A07	5700A -7	2 - I 8
FB03-88-177A07	5700AA-11	2 - M 9
FB03-88-177A07	5700AB-3	2 - E10
FB03-88-177A10	5700A -7	2 - I 8
FB03-88-177A10	5700AA-11	2 - M 9
FB03-88-177A48	5700A -7	2 - I 8
FB03-88-177A48	5700AA-11	2 - M 9
FB03-88-177A48	5700AB-3	2 - E10
FB02-88-180	5700A -8	2 - J 8
FB02-88-180 07	5700A -8	2 - J 8
FB02-88-180 10	5700A -8	2 - J 8
FB02-88-180 48	5700A -8	2 - J 8
FB03 88-180	5700A -7	2 - I 8
FB03-88-180 07	5700A -7	2 - I 8
FB03-88-180 10	5700A -7	2 - I 8

PART NUMBER	SECTION	LOCATION
FB03-88-180 48	5700A -7	2 - I 8
FB10-88-180	5700AA-12	2 - N 9
FB10-88-180 07	5700AA-12	2 - N 9
FB10-88-180 10	5700AA-12	2 - N 9
FB10-88-180 48	5700AA-12	2 - N 9
FB44-88-180	5700A -8	2 - J 8
FB44-88-180 07	5700A -8	2 - J 8
FB44-88-180 10	5700A -8	2 - J 8
FB44-88-180 48	5700A -8	2 - J 8
FB45-88-180	5700AA-12	2 - N 9
FB45-88-180 09	5700AA-12	2 - N 9
FB45-88-180 13	5700AA-12	2 - N 9
FB45-88-180 49	5700AA-12	2 - N 9
FB67-88-180	5700AB-3	2 - E10
FB67-88-180 07	5700AB-3	2 - E10
FB67-88-180 48	5700AB-3	2 - E10
FB68-88-180	5700AC-4	2 - I10
FB68-88-180 07	5700AC-4	2 - I10
FB68-88-180 48	5700AC-4	2 - I10
FB02-88-181	5700A -8	2 - J 8
FB02-88-181 07	5700A -8	2 - J 8
FB02-88-181 10	5700A -8	2 - J 8
FB02-88-181 48	5700A -8	2 - J 8
FB03-88-181	5700A -8	2 - J 8
FB03-88-181 07	5700A -8	2 - J 8
FB03-88-181 10	5700A -8	2 - J 8
FB03-88-181 48	5700A -8	2 - J 8
FB10-88-181	5700AA-12	2 - N 9
FB10-88-181 07	5700AA-12	2 - N 9
FB10-88-181 10	5700AA-12	2 - N 9
FB10-88-181 48	5700AA-12	2 - N 9
FB44-88-181	5700A -8	2 - J 8
FB44-88-181 07	5700A -8	2 - J 8
FB44-88-181 10	5700A -8	2 - J 8
FB44-88-181 48	5700A -8	2 - J 8
FB45-88-181	5700AA-12	2 - N 9
FB45-88-181 09	5700AA-12	2 - N 9
FB45-88-181 13	5700AA-12	2 - N 9
FB45-88-181 49	5700AA-12	2 - N 9
FB67-88-181	5700AB-3	2 - E10
FB67-88-181 07	5700AB-3	2 - E10
FB67-88-181 48	5700AB-3	2 - E10
FB68-88-181	5700AC-4	2 - I10
FB68-88-181 07	5700AC-4	2 - I10
FB68-88-181 48	5700AC-4	2 - I10
FB09-88-201A	5750A -2	2 - K10
FB09-88-201A07	5750A -2	2 - K10
FB09-88-201A10	5750A -2	2 - K10
FB09-88-201A48	5750A -2	2 - K10
FB38-88-201A	5750A -2	2 - K10
FB38-88-201A07	5750A -2	2 - K10
FB38-88-201A10	5750A -2	2 - K10
FB38-88-201A48	5750A -2	2 - K10
FB41-88-201A	5750AA-5	2 - G11
FB41-88-201A07	5750AA-5	2 - G11

PART NUMBER	SECTION	LOCATION
FB41-88-201A10	5750AA-5	2 - G11
FB41-88-201A48	5750AA-5	2 - G11
FB09-88-251	5750A -2	2 - K10
FB09-88-251 07	5750A -2	2 - K10
FB09-88-251 10	5750A -2	2 - K10
FB09-88-251 48	5750A -2	2 - K10
FB10-88-251	5750AA-5	2 - G11
FB10-88-251 07	5750AA-5	2 - G11
FB10-88-251 10	5750AA-5	2 - G11
FB10-88-251 48	5750AA-5	2 - G11
FB38-88-251	5750A -2	2 - K10
FB38-88-251 07	5750A -2	2 - K10
FB38-88-251 10	5750A -2	2 - K10
FB38-88-251 48	5750A -2	2 - K10
H001-88-257	5700A -8	2 - J 8
FB10-88-269	5750A -2	2 - K10
FB10-88-269	5750AA-5	2 - G11
B001-88-270	5750A -3	2 - L10
B001-88-270	5750AA-5	2 - G11
1243-88-323	5700A -8	2 - J 8
1243-88-323	5700AA-12	2 - N 9
FA58-88-336	5700A -8	2 - J 8
FA58-88-336	5700AA-12	2 - N 9
FA58-88-336	5700AB-3	2 - E10
FA58-88-336	5700AC-4	2 - I10
FB03-88-385	5700A -8	2 - J 8
FB03-88-385	5700AA-12	2 - N 9
FB03-88-385	5700AB-3	2 - E10
FB03-88-385 07	5700A -8	2 - J 8
FB03-88-385 07	5700AA-12	2 - N 9
FB03-88-385 07	5700AB-3	2 - E10
FB03-88-385 10	5700A -8	2 - J 8
FB03-88-385 10	5700AA-12	2 - N 9
FB03-88-385 48	5700A -8	2 - J 8
FB03-88-385 48	5700AA-12	2 - N 9
FB03-88-385 48	5700AB-3	2 - E10
FB03-88-386	5700A -8	2 - J 8
FB03-88-386	5700AA-12	2 - N 9
FB03-88-386	5700AB-3	2 - E10
FB03-88-386 07	5700A -9	2 - K 8
FB03-88-386 07	5700AA-12	2 - N 9
FB03-88-386 07	5700AB-3	2 - E10
FB03-88-386 10	5700A -9	2 - K 8
FB03-88-386 10	5700AA-12	2 - N 9
FB03-88-386 48	5700A -9	2 - K 8
FB03-88-386 48	5700AA-12	2 - N 9
FB03-88-386 48	5700AB-3	2 - E10
FB10-88-469	5750A -3	2 - L10
FB10-88-469	5750AA-5	2 - G11
B092-88-519	5700A -8	2 - J 8
B092-88-519	5700AA-12	2 - N 9
B092-88-519	5700AB-3	2 - E10
B092-88-519	5700AC-4	2 - I10
FB03-88-815	5700AB-3	2 - E10
B092-88-818	5700A -8	2 - J 8

PART NUMBER	SECTION	LOCATION
B092-88-818	5700AA-12	2 - N 9
B092-88-818	5700AB-3	2 - E10
B092-88-818	5700AC-4	2 - I10
B093-88-818	5700A -3	2 - E 8
B093-88-818	5700AA-9	2 - K 9
FA58-88-831	5700A -6	2 - H 8
FA58-88-831	5700AB-3	2 - E10
FA58-88-831 07	5700A -6	2 - H 8
FA58-88-831 07	5700AB-3	2 - E10
FA58-88-831 10	5700A -6	2 - H 8
FA58-88-831 48	5700A -6	2 - H 8
FA58-88-831 48	5700AB-3	2 - E10
F044-88-833	5700A -9	2 - K 8
F044-88-833	5700AA-12	2 - N 9
F044-88-833	5700AC-4	2 - I10
FB68-88-970	5700AC-4	2 - I10
BU01-99-190	1960 -1	1 - J 9
BU01-99-190A	1960 -1	1 - J 9
FB67-R1-01YC	6330A -1	2 - E15
FB67-R1-110A	6330A -1	2 - E15
FC23-R1-210	6330A -1	2 - E15
FB67-R1-212A	6330A -1	2 - E15
FB67-R1-212A07	6330A -1	2 - E15
FB67-R1-212A48	6330A -1	2 - E15
FB67-R1-213	6330A -1	2 - E15
FB67-R1-214A	6330A -1	2 - E15
FB67-R1-217B	6330A -1	2 - E15
FB67-R1-218	6330A -1	2 - E15
FB67-R1-219	6330A -1	2 - E15
FB67-R1-421A	6330A -1	2 - E15
FB67-R1-510D	6330A -1	2 - E15
FB67-R1-520B	6330A -1	2 - E15
FB67-R1-711A	6330A -1	2 - E15
FB67-R1-721E	6330A -1	2 - E15
FB67-R1-810H	6330A -1	2 - E15
FB67-R1-860D	6330A -1	2 - E15
FB67-R1-870D	6330A -1	2 - E15
FB67-R1-881C	6330A -1	2 - E15
FB67-R1-882C	6330A -1	2 - E15
FB67-R1-910C	6330A -1	2 - E15
FB67-R1-910C07	6330A -1	2 - E15
FB67-R1-910C48	6330A -1	2 - E15
FB67-R1-911A	6330A -1	2 - E15
FB67-R1-912A	6330A -1	2 - E15
FB67-R1-913A	6330A -1	2 - E15
FB67-R1-916	5340AA-3	2 J 5
FB67-R1-91YC	6330A -1	2 - E15
FB67-R1-91ZC	6330A -1	2 - E15
FB67-R1-920C	6330A -1	2 - E15
FB67-R1-920C07	6330A -1	2 E15
FB67-R1-920C48	6330A -1	2 - E15
FB67-R1-921A	6330A -1	2 - E15
FB67-R1-921A07	6330A -2	2 - F15
FB67-R1-921A48	6330A -2	2 - F15
FB67-R1-923	6330A -2	2 - F15

PART NUMBER	SECTION	LOCATION
FB67-R1-926	6330A -2	2 - F15
FB67-R1-930A	6330A -2	2 - F15
FB67-R1-940A	6330A -2	2 - F15
B235-R1-951C	6860AB-2	3 - F 6
FC54-R1-951B	6330A -2	2 - F15
FC54-R1-952B	6330A -2	2 - F15
FB67-R1-954	7250 -1	3 - J 7
FB67-R1-956A	7250 -1	3 - J 7
FB67-R1-960C	6330A -1	2 - E15
FB67-R1-960C07	6330A -1	2 - E15
FB67 R1-960C48	6330A -1	2 - E15
FB01-V0-622	7900 -1	3 - L 7
FB01-V0-631	7900 -1	3 - L 7
FB01-V0-631 1F	7900 -1	3 - L 7
FB01-V0-631 5F	7900 -1	3 - L 7
FB01-V0-631 7F	7900 -1	3 - L 7
FB01-V0-634	7900 -1	3 - L 7
FB01-V0-634 1F	7900 -1	3 - L 7
FB01-V0-634 5F	7900 -1	3 - L 7
FB01-V0-634 7F	7900 -1	3 - L 7
FB01-V0-636	7900 -1	3 - L 7
FB01-V0-639	7900 -1	3 - L 7