# Parts Catalog

## Mazda RX-7
## U.S.A.
## ('89►'90)

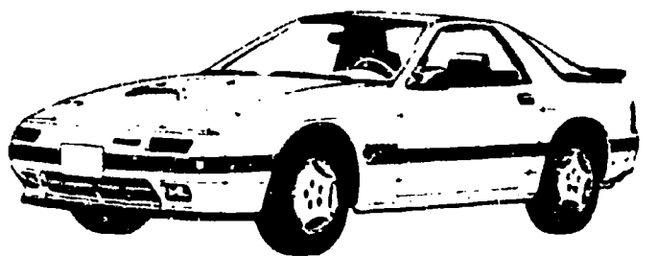

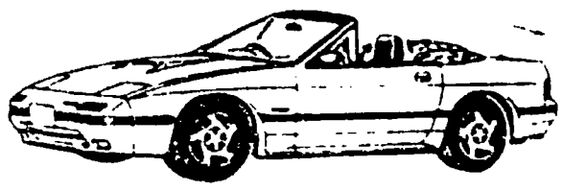

FC3••••-700001 - 900000

**May '92 (FINAL)**

Catalog No. AU-FA02-06

mazda

©1992 Mazda Motor Corporation

LAYOUT OF CONTENTS

- The following is a typical example of the layout of contents of Mazda microfiche parts catalog.

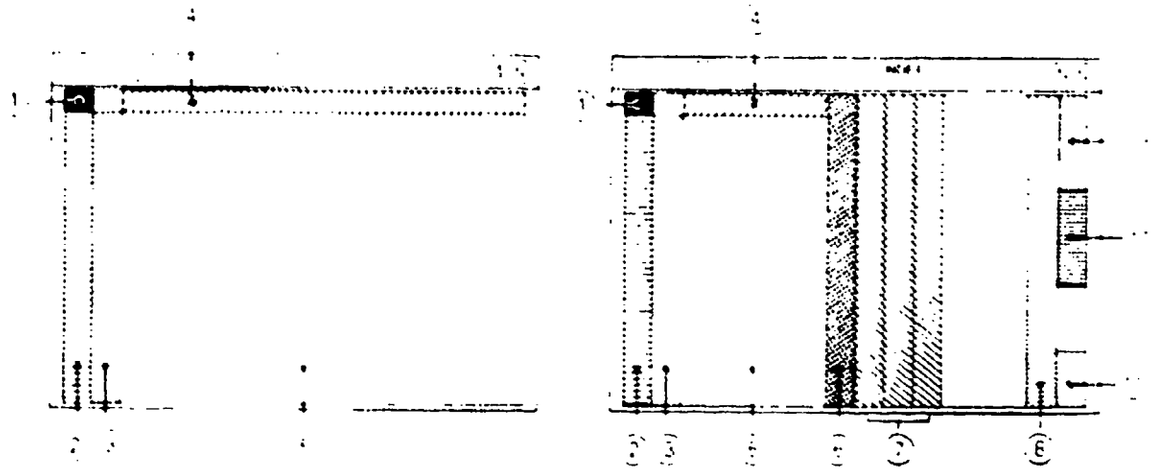

1 · Layout of contents
2 · Pictorial Index
3 · Master Section No. Index
4 · Section Identification for the Diagram
5 · Illustration & Text
6 · Part No. Index
7 · Alphabetical Index
8 · Model Identification
9 · Vehicle Identification System

# PICTORIAL INDEX

## ENGINE (1/2)

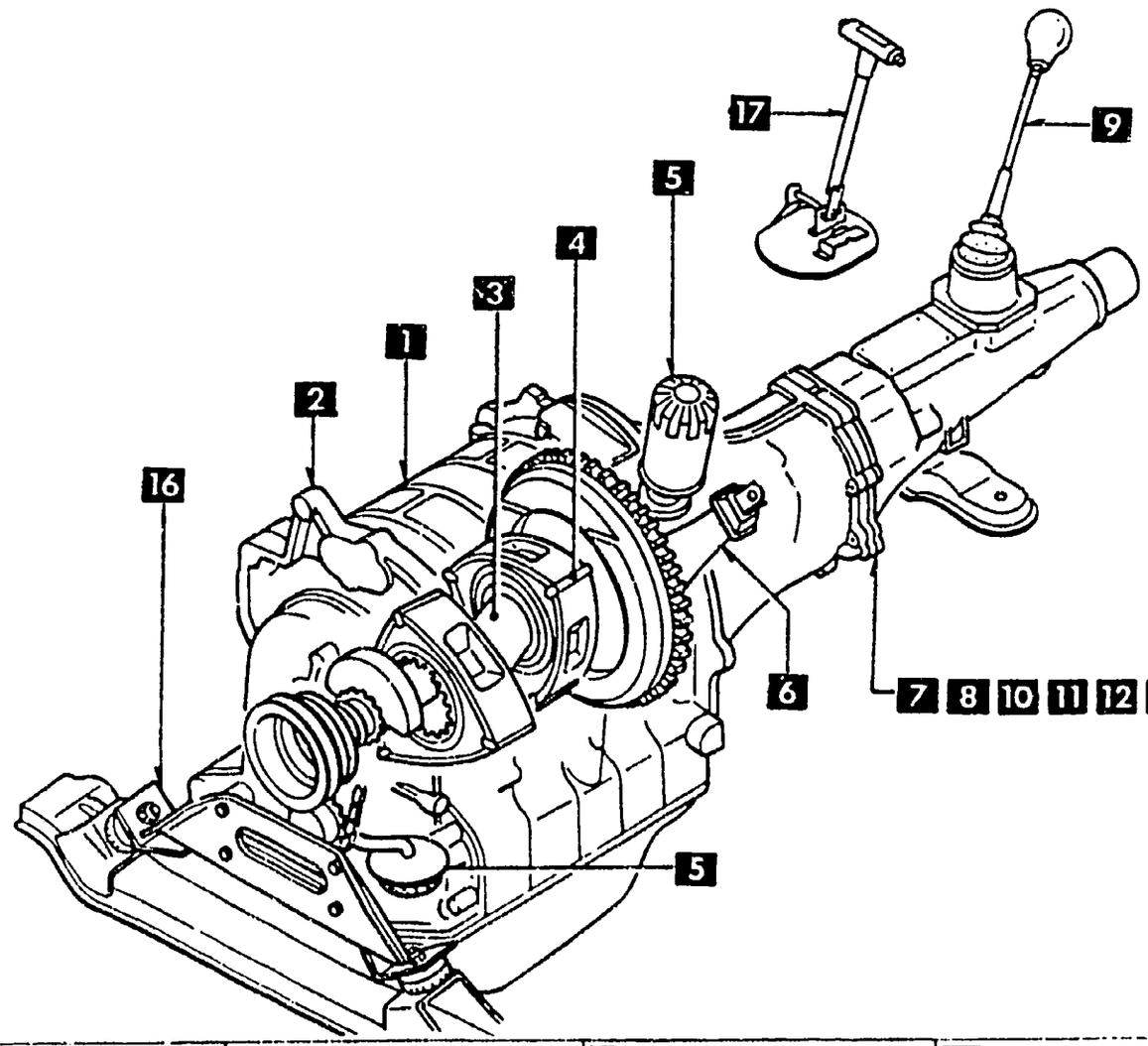


**1000**



SHORT ENGINE & GASKET SETS

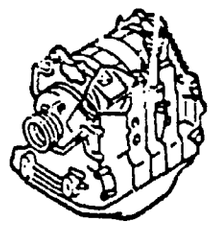

**1** 1030

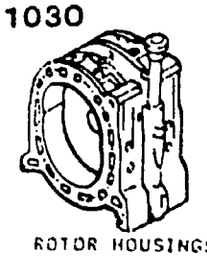

ROTOR HOUSINGS

**2** 1040



OIL PAN, FRONT & REAR HOUSING

**3** 1100

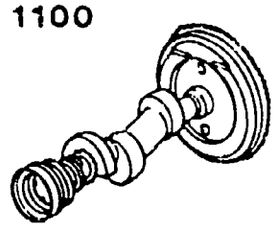

ECCENTRIC SHAFT & FLYWHEEL

**4** 1110

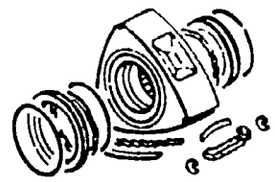

ROTORS & RELATED PARTS

**5** 1400

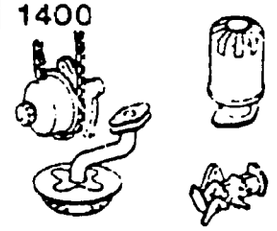

OIL PUMP & FILTER

**6** 1600

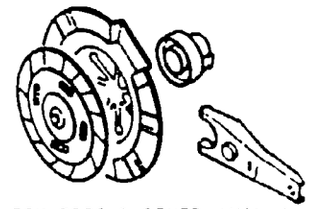

CLUTCH DISC & COVER (MANUAL)

**7** 1700

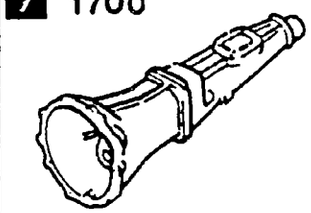

TRANSMISSION CASE (MANUAL)

**8** 1710

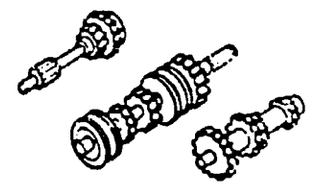

TRANSMISSION GEARS(MANUAL)

**9** 1720

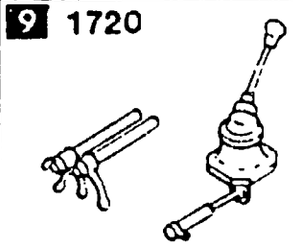

CHANGE CONTROL SYSTEM(MANUAL)

**10** 1910

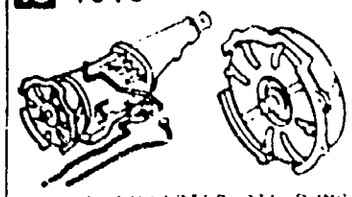

TORQUE CONVERTER,OIL PUMP & PIPINGS (AUTOMATIC)

**11** 1920 1925

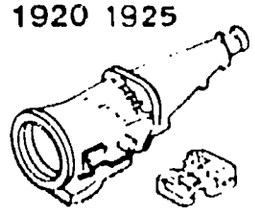

TRANSMISSION CASE & MAIN CONTRL. SYSTEM (AUTOMATIC)

**12** 1930

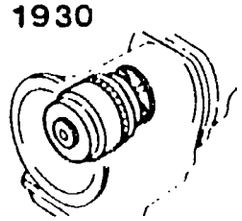

CLUTCHES & PLANETARY GEARS (AUTOMATIC)

**13** 1940

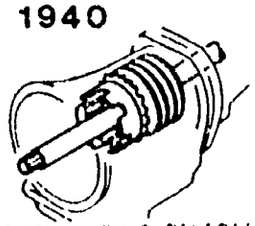

GOVERNOR, LOW & REVERSE PISTON(AUTOMATIC)

**14** 1950

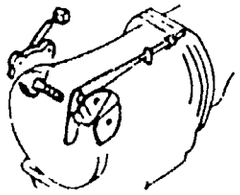

MANUAL LINKAGE SYSTEM (AUTOMATIC)

**15** 1960

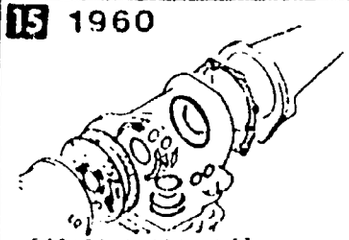

GASKET & SEAL KIT (AUTOMATIC)

**16** 3900

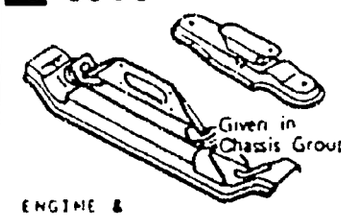


ENGINE & T/MISSION MOUNTINGS

**17** 4600




CHANGE CONTROL SYSTEM

As this illustration is prepared to be applicable to all models, some parts are different in specifications from the parts listed in this parts catalog

# PICTORIAL INDEX

**1** 1300



INLET MANIFOLD

**2** 1310



EXHAUST MANIFOLD

**3** 1311



INTER COOLER

**4** 1312

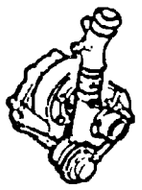

TURBO CHARGER

**5** 1320



FUEL SYSTEM

**6** 1325

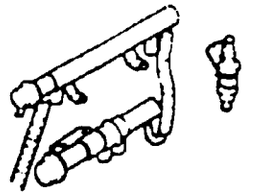

FUEL DISTRIBUTOR

**19** 1850

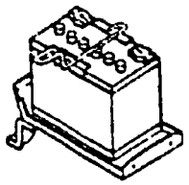

BATTERY

**18** 1840

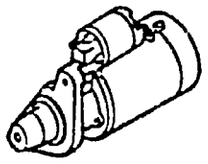

STARTER

## ENGINE (2/2)

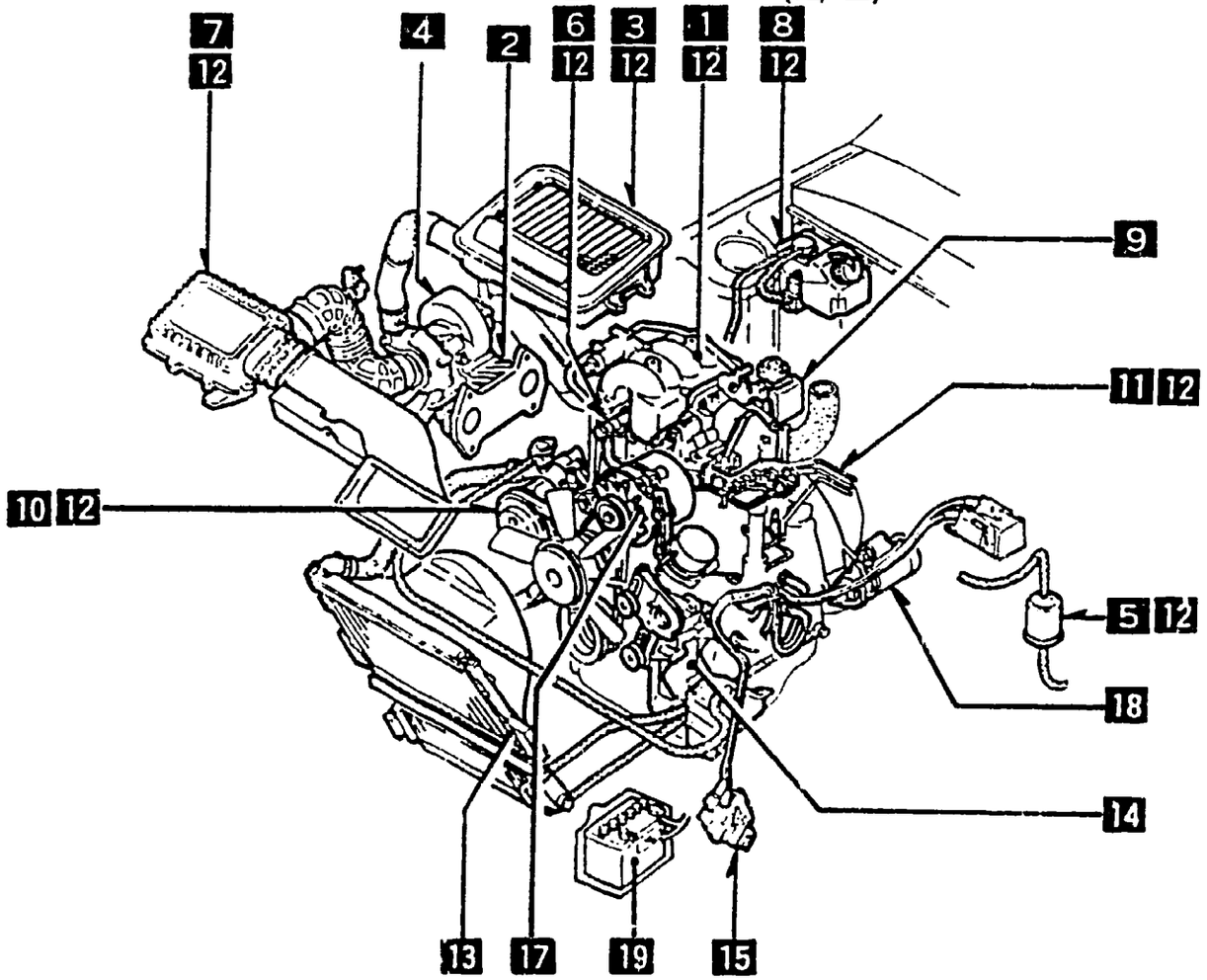


**7** 1330

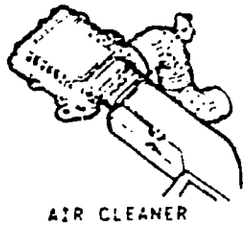

AIR CLEANER

**8** 1350

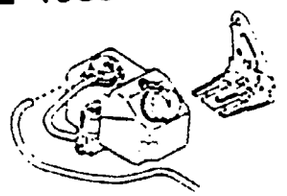

STARTING ASSIST SYSTEM

**17** 1930

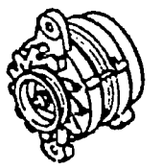

ALTERNATOR

**16**

**9** 1364

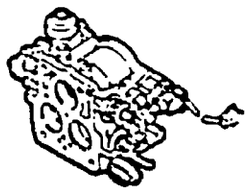

THROTTLE BODY

**10** 1371



AIR PUMP &
AIR CONTROL VALVE

**15** 1800

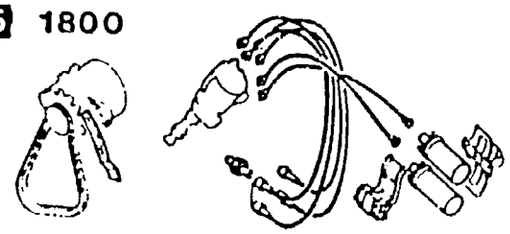

ENGINE ELECTRICAL SYSTEM

**14** 1580

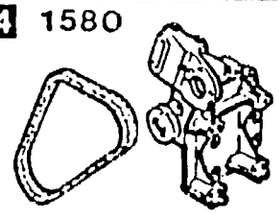

BRACKET, PULLEY & BELT

**13** 1500

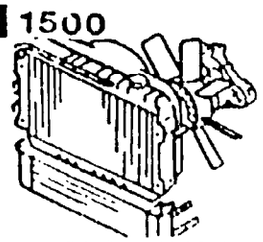

COOLING SYSTEM

**12** 1399



**11** 1380



As the illustration is prepared to be applicable to all models, some parts are different in specifications from the parts listed in this parts catalog.

# PICTORIAL INDEX

## CHASSIS (1/2)

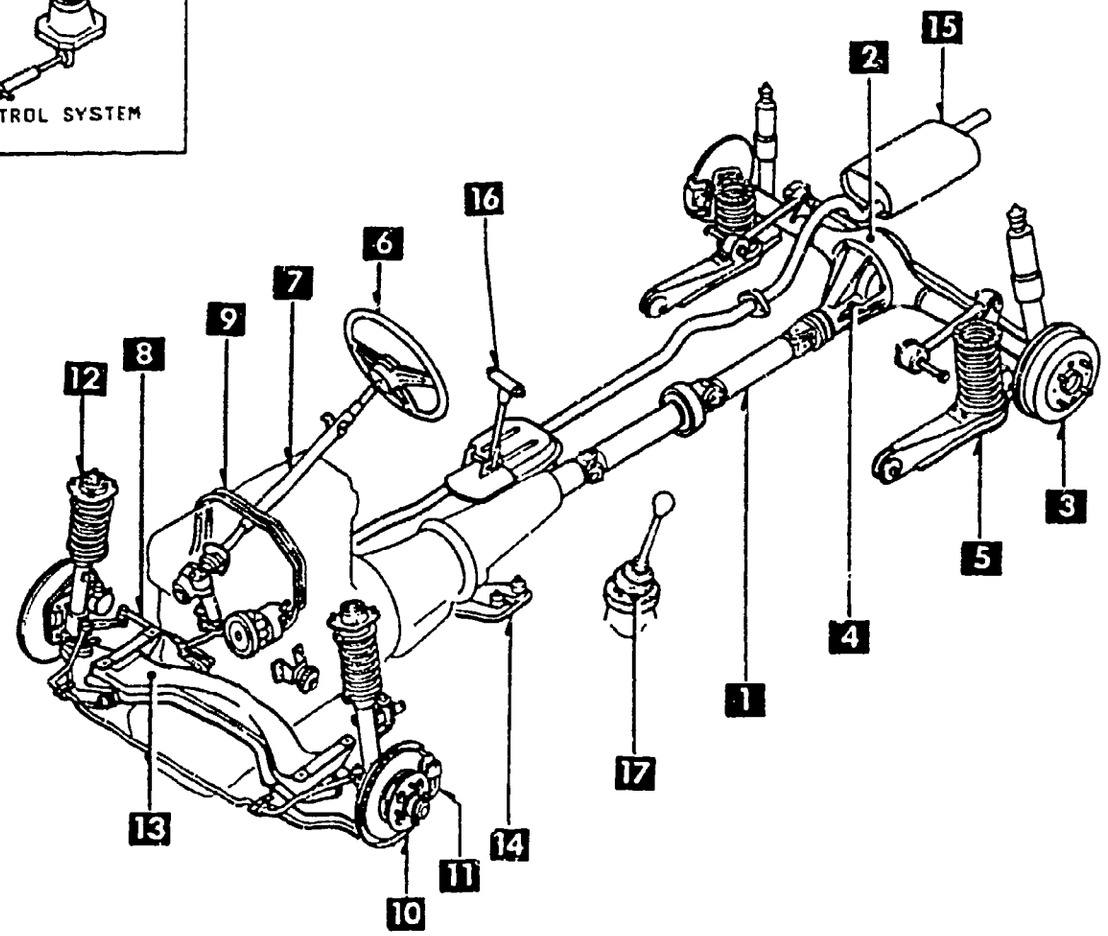


**1** 2505

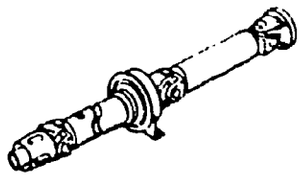

REAR PROPELLER SHAFT

**2** 2550

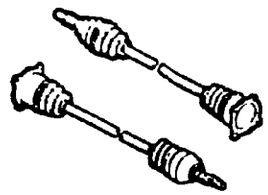

REAR DRIVE SHAFT

2600

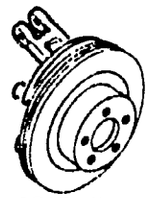

REAR AXLE

**3** 2610



REAR BRAKE MECHANISMS

**4** 2710

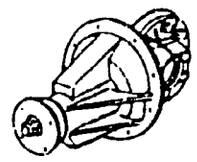

REAR DIFFERENTIALS

**5** 2800 2810

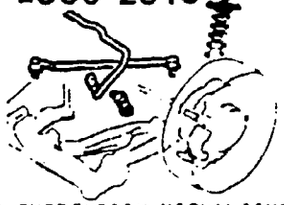

REAR SUSPENSION MECHANISMS
REAR STABILIZER

2801

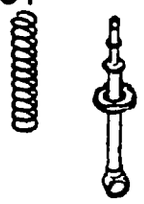

REAR SPRING & DAMPER

2830

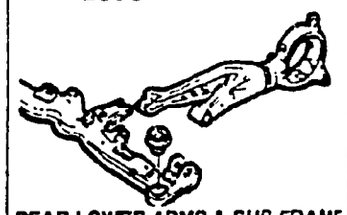

REAR LOWER ARMS & SUB FRAME

**6** 3200



STEERING WHEEL

**7** 3210

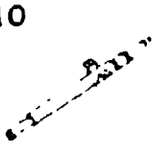

STEERING COLUMN & SHAFTS

**8** 3220

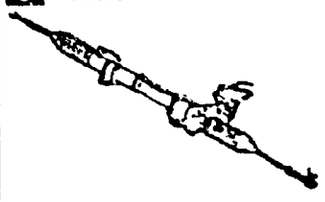

STEERING GEAR

**9** 3240

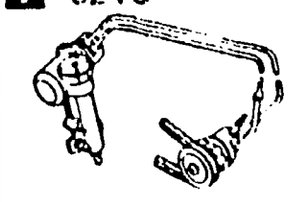

POWER STEERING SYSTEM

**10** 3300

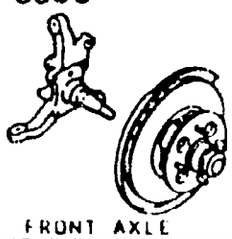

FRONT AXLE

**11** 3310



FRONT BRAKE MECHANISMS

3400

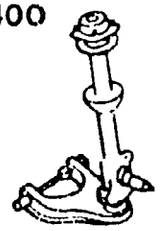

FRONT SUSPENSION MECHANISMS

**12** 3401



FRONT SPRING & DAMPER

**13** 3410

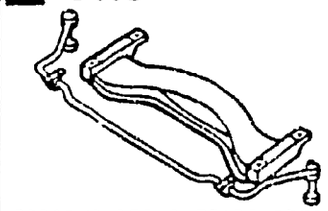

CROSSMEMBER & STABILIZER

**14** 3900

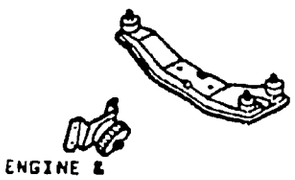

ENGINE & T/MISSION MOUNTINGS

**15** 4000

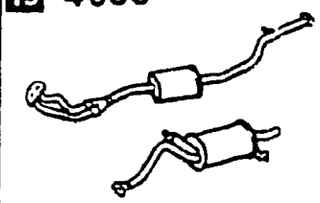

EXHAUST SYSTEM

**16** 4600

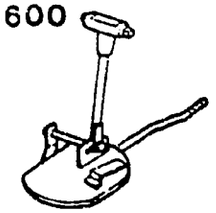

CHANGE CONTROL SYSTEM (AUTOMATIC)

**17** 1720

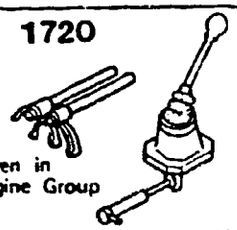

Given in Engine Group

CHANGE CONTROL SYSTEM (MANUAL)

As this illustration is prepared to be applicable to all models, some parts are different in specifications from the parts listed in this parts Catalog

# PICTORIAL INDEX

**1** 3700

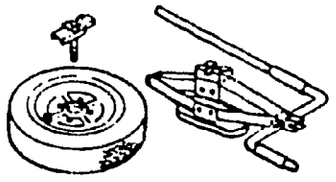

TIRES & JACK

**2** 4140

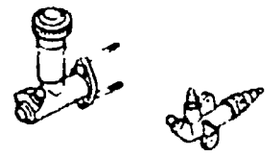

CLUTCH RELEASE & MASTER CYLINDERS (MANUAL TRANSMISSION)

4145

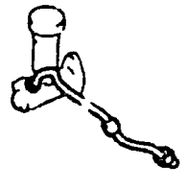

CLUTCH PIPINGS (MANUAL TRANSMISSION)

**3** 4160



ACCELERATOR CONTROL SYSTEM

**4** 4200

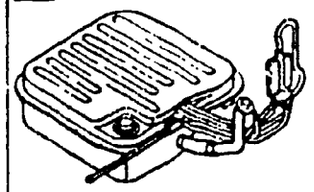

FUEL TANK

**5** 4300

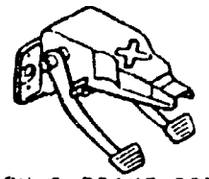

CLUTCH & BRAKE PEDALS (MANUAL TRANSMISSION)

## CHASSIS (2/2)

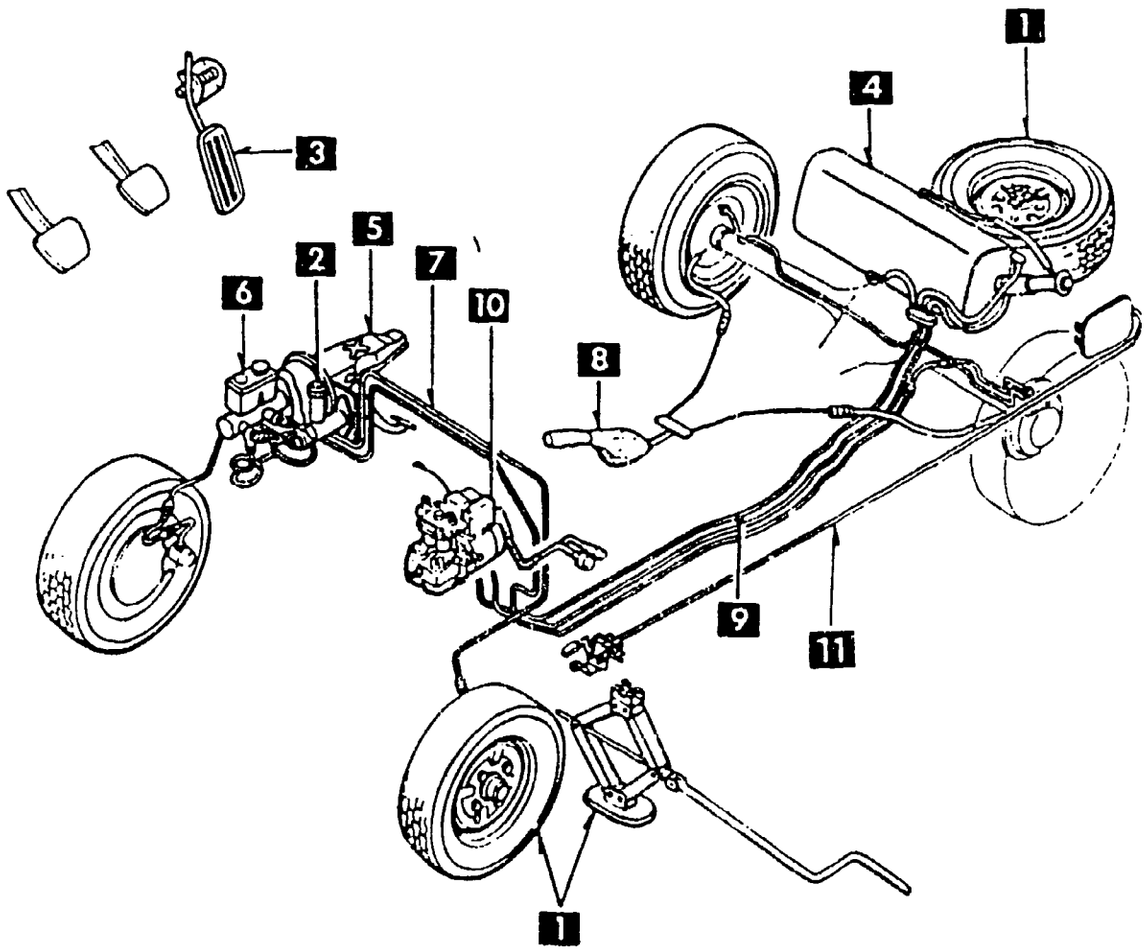


As this illustration is prepared to be applicable to all models, some parts are different in specifications from the parts listed in this parts Catalog.

**6** 4340

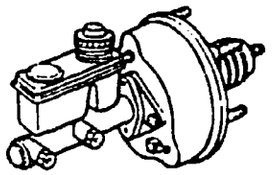

BRAKE MASTER CYLINDER & POWER BRAKE

**7** 4360

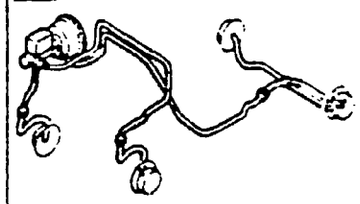

BRAKE PIPINGS

**8** 4400

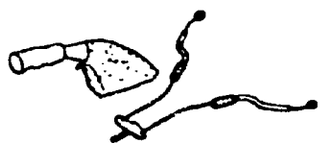

PARKING BRAKE SYSTEM

**9** 4500

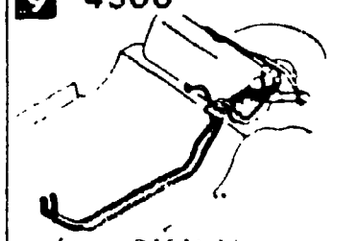

FUEL PIPINGS

**11** 4210

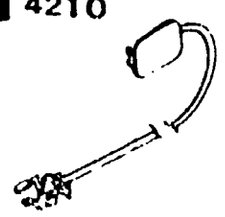

FUEL LID OPENER

**10** 4370

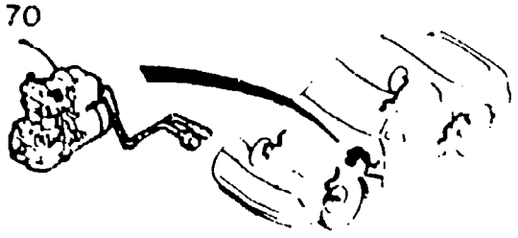

ANTILOCK BRAKE SYSTEM

# PICTORIAL INDEX

**1** 0500



KEY SETS

**2** 5020

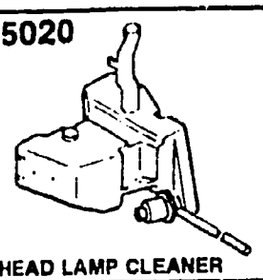

HEAD LAMP CLEANER

**3** 5100



HEAD LAMPS

**4** 5103

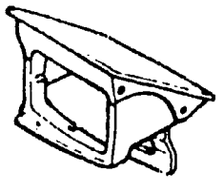

HEAD LAMP RETRACTORS

**5** 5105

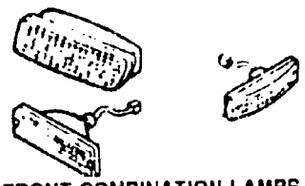

FRONT COMBINATION LAMPS

**6** 5110

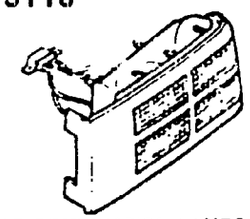

REAR COMBINATION LAMPS

**19** 6704

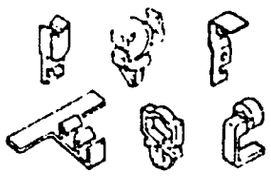

WIRING HARNESS CLAMPS

**20** 6720

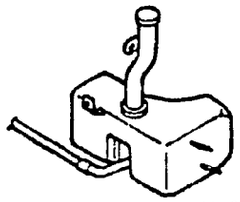

WINDSHIELD WASHER

**21** 6730

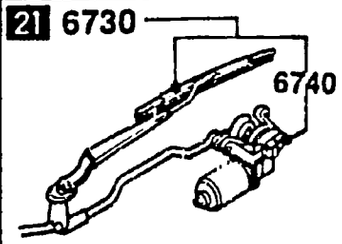


WINDSHIELD WIPERS

**22** 6750

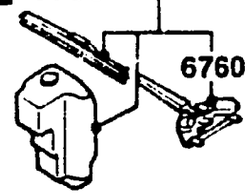


WINDOW WIPER & WASHER (REAR)

**7** 5120

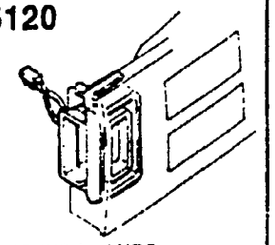

LICENSE LAMPS

**18** 6703



WIRING HARNESSES (DOOR, FLOOR/CEILING)

## BODY (1/4)

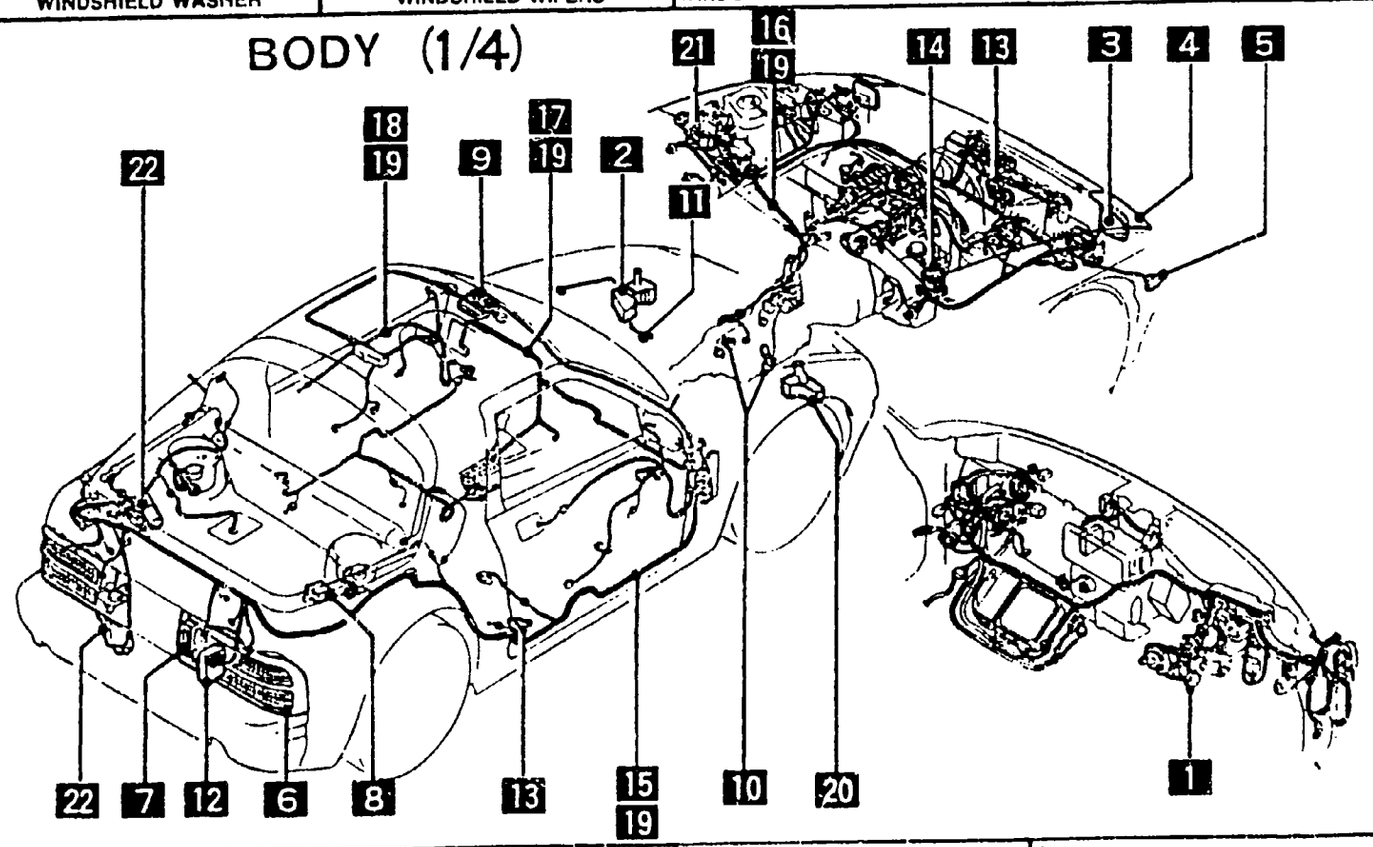


**8** 5125

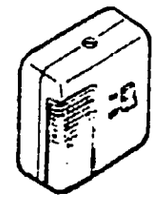

INTERIOR LAMPS

**17** 6702

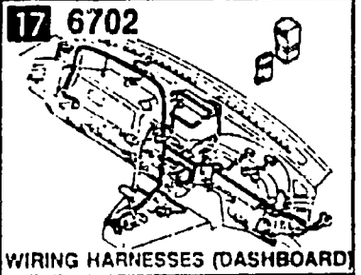

WIRING HARNESSES (DASHBOARD)

**9** 5130

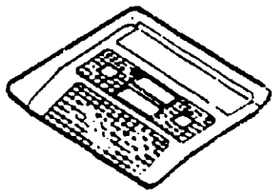

OVERHEAD CONSOLE

**16** 6701

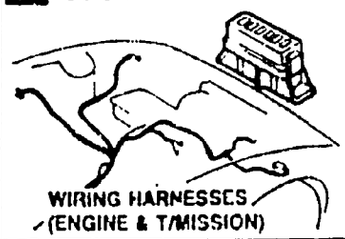

WIRING HARNESSES (ENGINE & T/MISSION)

**10** 6600



SWITCHES & RELAYS (ENGINE)

**15** 6700



WIRING HARNESSES (FRONT & REAR)

**14** 6640

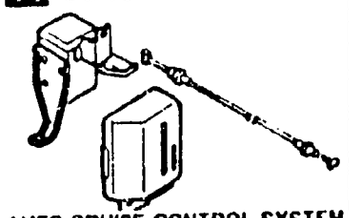

AUTO CRUISE CONTROL SYSTEM

**13** 6635

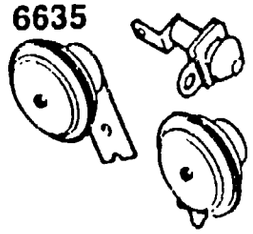

DOOR SWITCH & HORNS

**12** 6630

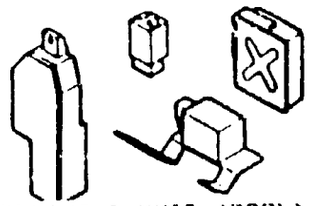

RELAYS & UNIT (BODY)

**11** 5795



AIR BAG

As this illustration is prepared to be applicable to all models, some parts are different in specifications from the parts listed in this parts Catalog

# PICTORIAL INDEX

## BODY (2/4)

**1** 5000
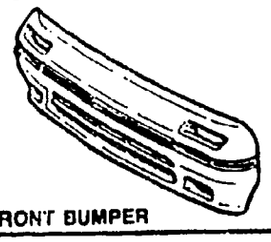
FRONT BUMPER

**2**

**3** 5010
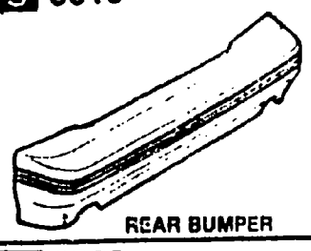
REAR BUMPER

**4** 5030
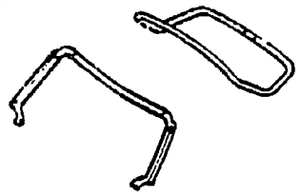
WINDOW MOULDINGS

**5** 5040

BODY MOULDINGS

**6** 5060
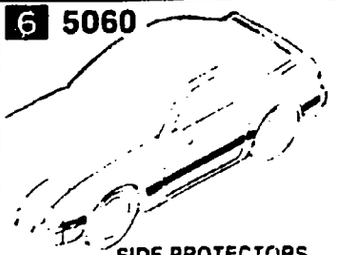
SIDE PROTECTORS

**20** 5840
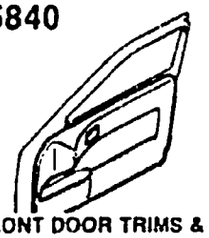
FRONT DOOR TRIMS & RELATED PARTS

**21** 6230
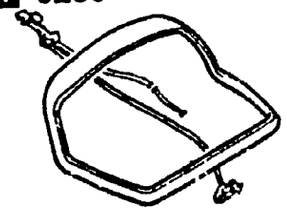
LIFT GATE MECHANISMS

**22** 6300
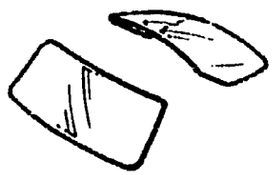
WINDOW GLASSES

**23** 6330
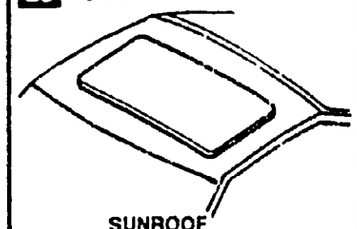
SUNROOF

**24** 7800

SPOILERS & RELATED PARTS

**7** 5170
RX-7
mazda
ORNAMENTS

**19** 5830
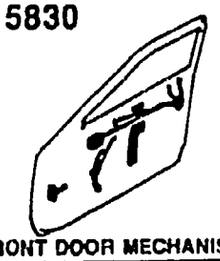
FRONT DOOR MECHANISMS

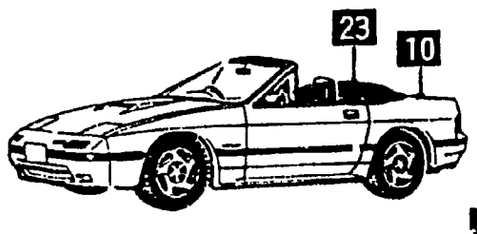


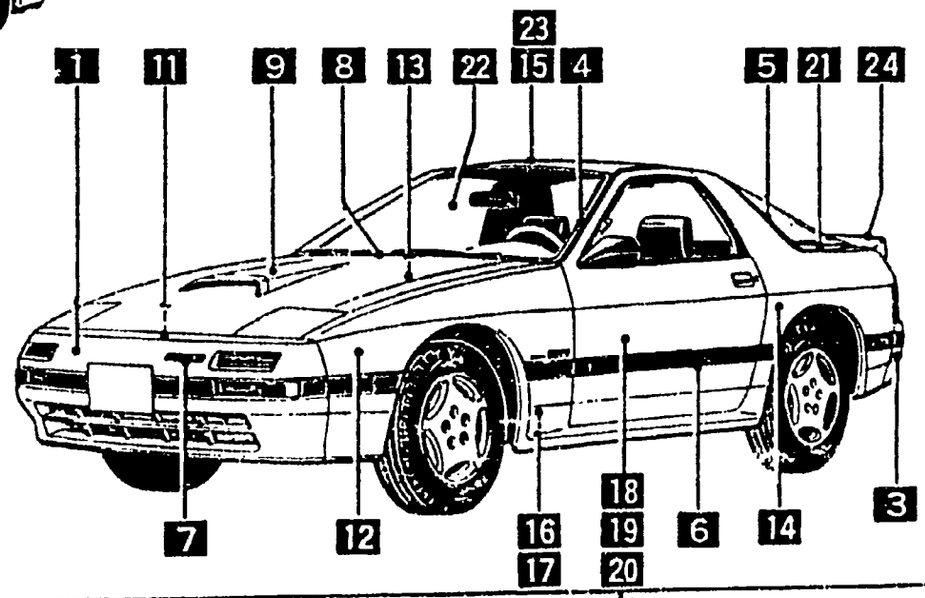


**8** 5180
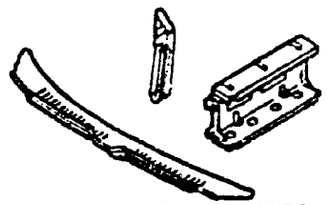
COWL & EXTRACTOR GRILLES

**18** 5800
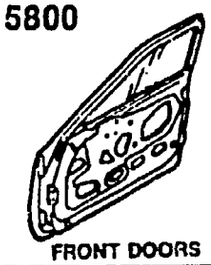
FRONT DOORS

**9** 5230
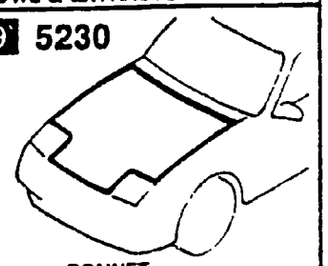
BONNET

**17** 5390
5380
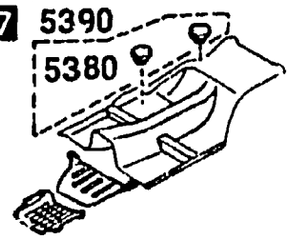
FLOOR ATTACHMENTS

**10** 5260
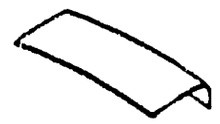
TRUNK LID

**16** 5370
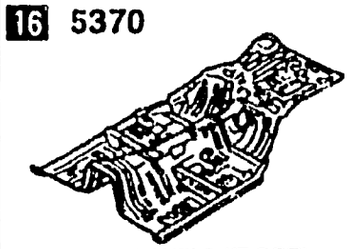
BODY PANELS (FLOOR)

**15** 5360
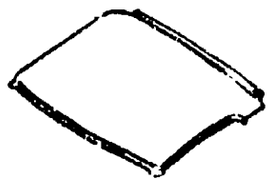
BODY PANELS (ROOF)

**14** 5340
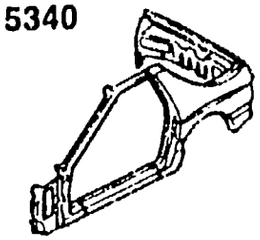
BODY PANELS (SIDE)

**13** 5330
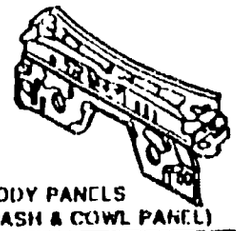
BODY PANELS (DASH & COWL PANEL)

**12** 5320
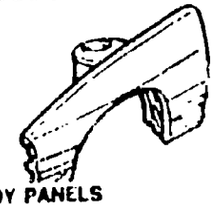
BODY PANELS (FENDER & WHEEL APRON)

**11** 5310
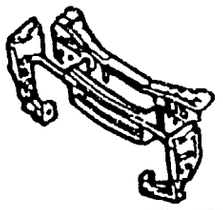
BODY PANELS (FRONT)

As this illustration is prepared to be applicable to all models, some parts are different in specifications from the parts listed in this parts Catalog

# PICTORIAL INDEX

**1** 5500

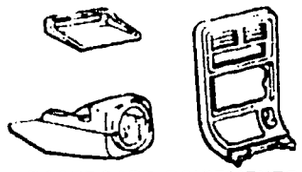

DASHBOARD EQUIPMENTS

**2** 5520

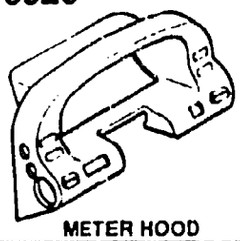

METER HOOD

**3** 5530

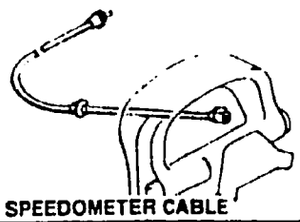

SPEEDOMETER CABLE

**4** 5540

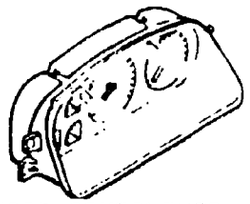

METER COMPONENTS

**5** 5560

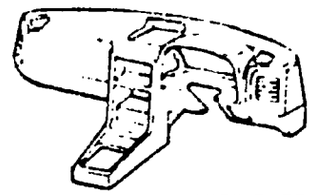

DASHBOARD & RELATED PARTS

**6** 5570

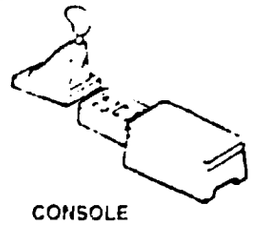

CONSOLE

## BODY (3/4)

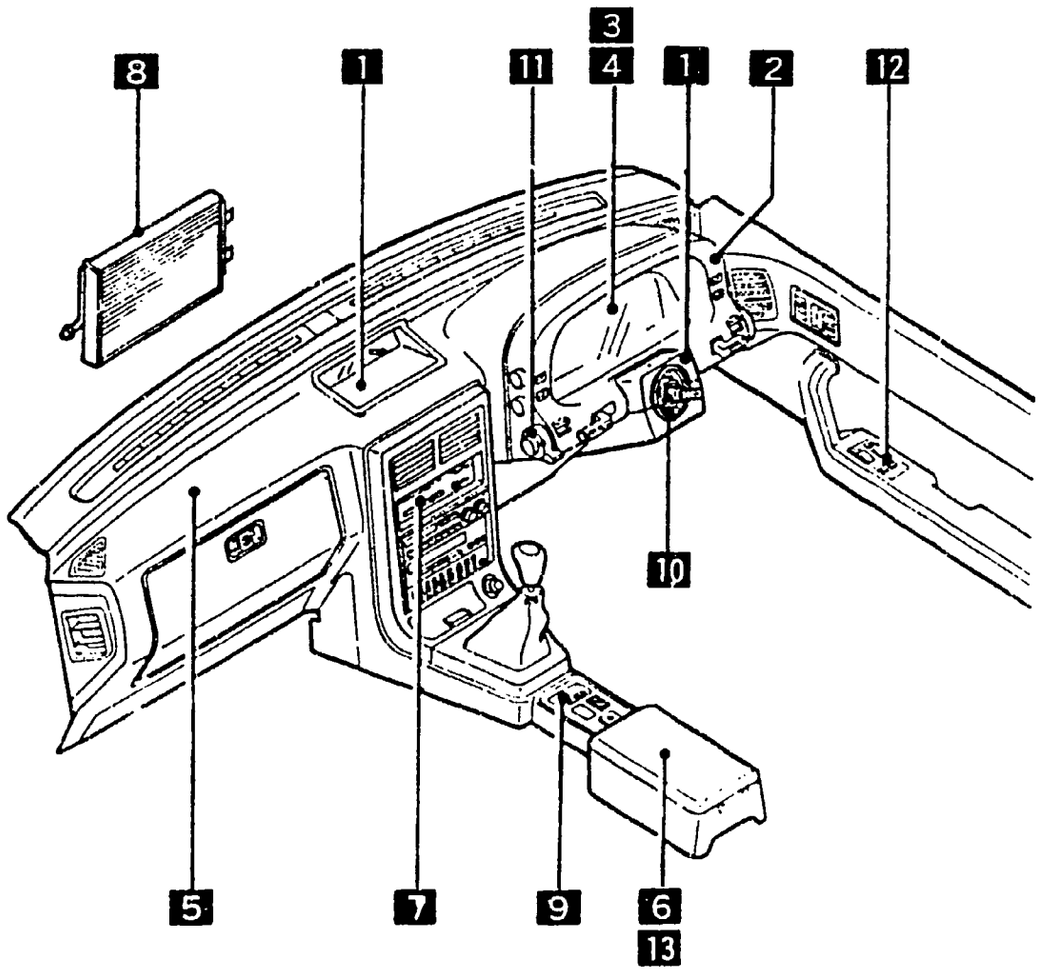


**7**

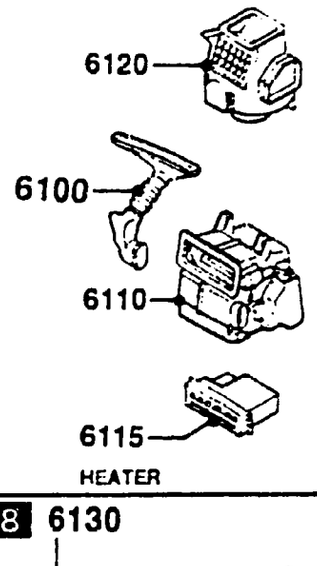


HEATER

**8** 6130

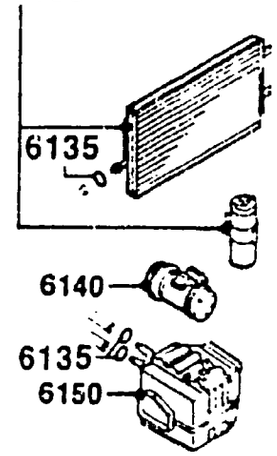


AIR CONDITIONER

**13** 7900

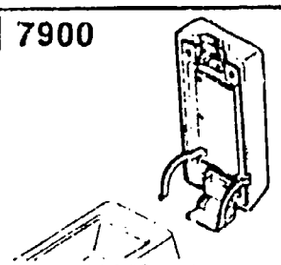

ACCESSORIES

**12** 6615

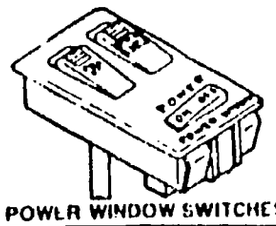

POWER WINDOW SWITCHES

**11** 6612

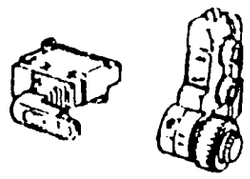

CLUSTER SWITCH

**10** 6611

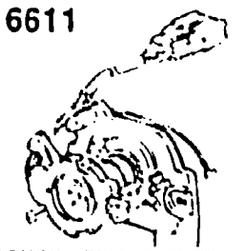

COMBINATION SWITCH

**9** 6610

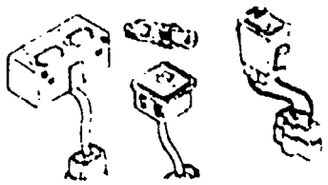

DASHBOARD SWITCHES

As the illustration is prepared to be applicable to all models, some parts are different
from the specifications from the parts listed in this parts Catalog

# PICTORIAL INDEX

**1** 5580

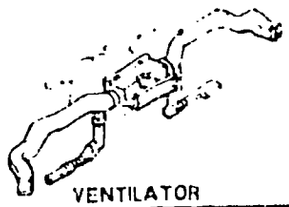

VENTILATOR

**2** 5700



FRONT SEATS

**3** 5750

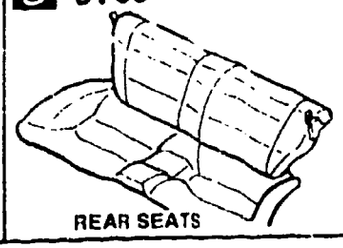

REAR SEATS

**4** 5790

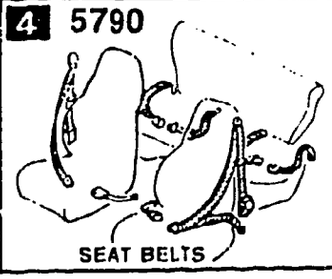

SEAT BELTS

**5** 6680

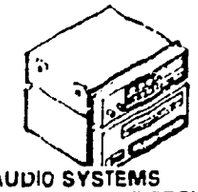

AUDIO SYSTEMS
(RADIO & TAPE DECK)

**6** 6682

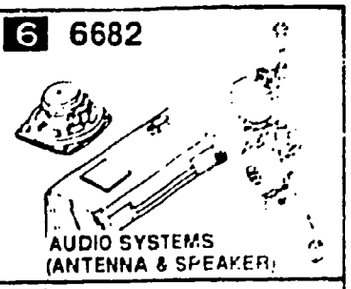

AUDIO SYSTEMS
(ANTENNA & SPEAKER)

## BODY (4/4)

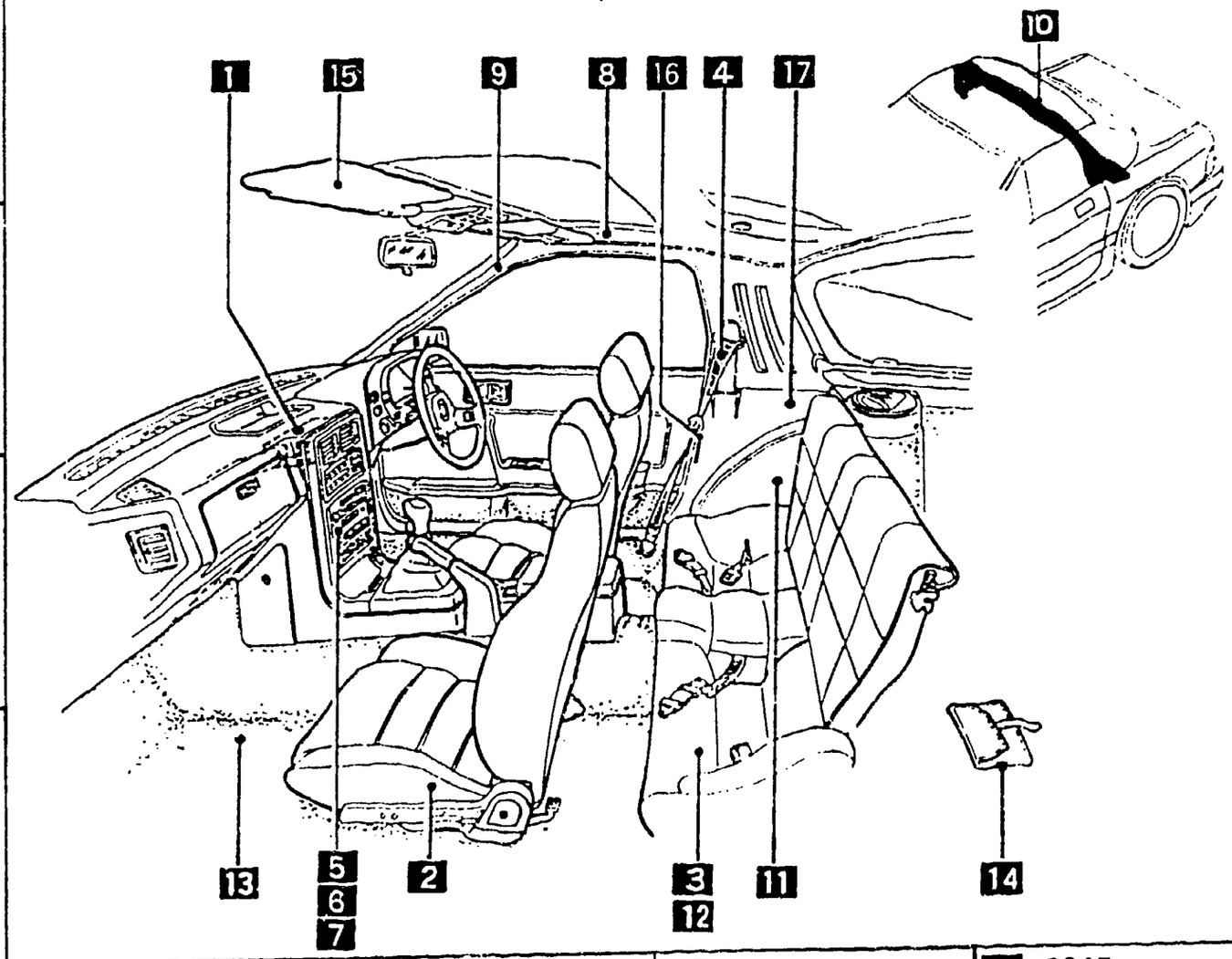


**7** 6684



AUDIO SYSTEMS
(NOISE SUPPRESSOR &
EARTH CORD)

**8** 6800

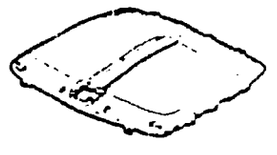

CEILING TRIMS

**9** 6820

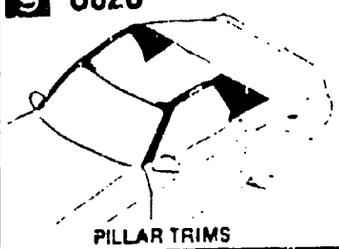

PILLAR TRIMS

**10** 6810



ROLLBAR

**11** 6840

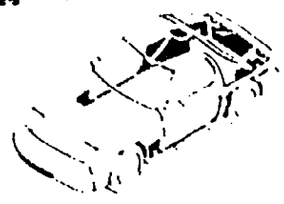

TRIMS & SCUFF PLATES

**12** 6845

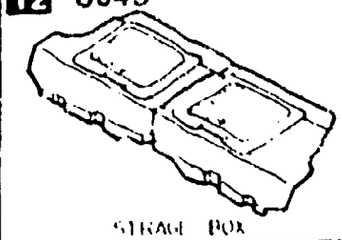

STRAGE BOX

**13** 6860

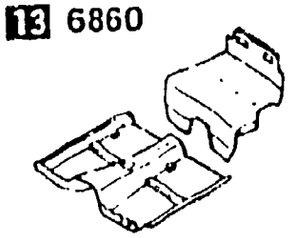

FLOOR MATS & PADS

**14** 6870

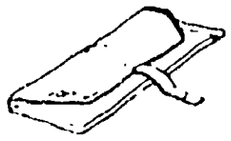

SERVICE TOOLS

**15** 6900

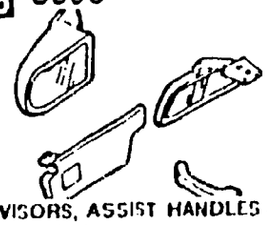

VISORS, ASSIST HANDLES &
MIRRORS

**16** 6930

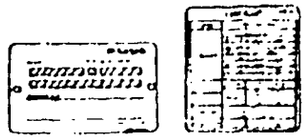

CAUTION PLATES & LABELS

**17** 7250

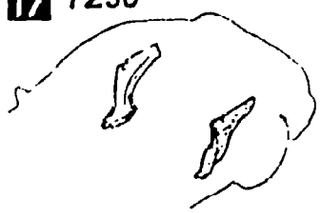

QUARTER WINDOW & TRIMS

As this illustration is prepared to be applicable to all models, some parts are different
or specifications from the parts listed in this parts Catalog

## SECTION NAME INDEX (ENGINE)

| LO.NO | SEC.NO | SECTION NAME |
|---|---|---|
| 1-C03 | 1000 | SHORT ENGINE & GASKET SETS (W/O TURBO) |
| 1-D03 | 1000 A | SHORT ENGINE & GASKET SETS (TURBO) |
| 1-E03 | 1030 | ROTOR HOUSINGS (W/O TURBO) |
| 1-G03 | 1030 A | ROTOR HOUSINGS (TURBO) |
| 1-J03 | 1040 | OIL PAN,FRONT & REAR HOUSING (W/O TURBO) |
| 1-M03 | 1040 A | OIL PAN,FRONT & REAR HOUSING (TURBO) |
| 1-D04 | 1100 | ECCENTRIC SHAFT & FLYWHEEL |
| 1-G04 | 1110 | ROTORS & RELATED PARTS |
| 1-I04 | 1300 | INLET MANIFOLD |
| 1-M04 | 1310 | EXHAUST MANIFOLD |
| 1-N04 | 1311 | INTER COOLER (TURBO) |
| 1-C05 | 1312 | TURBO CHARGER (TURBO) |
| 1-F05 | 1320 | FUEL SYSTEM |
| 1-H05 | 1325 | FUEL DISTRIBUTOR |
| 1-I05 | 1330 | AIR CLEANER |
| 1-M05 | 1350 | STARTING ASSIST SYSTEM |
| 1-N05 | 1364 | THROTTLE BODY |
| 1-F06 | 1371 | AIR PUMP & AIR CONTROL VALVE |
| 1-I06 | 1380 | EMISSION CONTROL SYSTEM |
| 1-D07 | 1399 | CAP & HOSE CLIP (INLET & EXHAUST SIDE) |
| 1-F07 | 1400 | OIL PUMP & FILTER (W/O TURBO) |
| 1-I07 | 1400 A | OIL PUMP & FILTER (TURBO) |
| 1-M07 | 1500 | COOLING SYSTEM |
| 1-F08 | 1580 | BRACKET,PULLEY & BELT |
| 1-C09 | 1600 | CLUTCH DISC & COVER (MANUAL) |
| 1-F09 | 1700 | TRANSMISSION CASE (MANUAL) |
| 1-J09 | 1710 | TRANSMISSION GEARS(MANUAL) |
| 1-H10 | 1720 | CHANGE CONTROL SYSTEM (MANUAL) |
| 1-M10 | 1800 | ENGINE ELECTRICAL SYSTEM |
| 1-E11 | 1830 | ALTERNATOR |
| 1-G11 | 1840 | STARTER |
| 1-J11 | 1850 | BATTERY |
| 1-K11 | 1910 | TORQUE CONVERTER,OIL PUMP & PIPINGS (AUTOMATIC) |
| 1-N11 | 1920 | TRANSMISSION CASE & MAIN CONTROL SYSTEM (AUTOMATIC) |
| 1-I12 | 1925 | CONTROL VALVE (AUTOMATIC) |
| 1-D13 | 1930 | CLUTCHES & PLANETARY GEARS (AUTOMATIC) |
| 1-L13 | 1940 | GOVERNOR, LOW & REVERSE PISTON (AUTOMATIC) |
| 1-C14 | 1950 | MANUAL LINKAGE SYSTEM (AUTOMATIC) |
| 1-E14 | 1960 | GASKET & SEAL KIT (AUTOMATIC) |

CATLOG-NO= AUFA02-06

DATE. 1992-05

## SECTION NAME INDEX (CHASSIS)

| LO.NO | SEC.NO | SECTION NAME |
|---|---|---|
| 2-C03 | 2505 | REAR PROPELLER SHAFT |
| 2-D03 | 2550 | REAR DRIVE SHAFT |
| 2-E03 | 2600 | REAR AXLE |
| 2-G03 | 2610 | REAR BRAKE MECHANISMS |
| 2-K03 | 2710 | REAR DIFFERENTIALS (NORMAL DIFF.) |
| 2-C04 | 2710 A | REAR DIFFERENTIALS (LIMITED SLIP DIFF.) |
| 2-H04 | 2800 | REAR SUSPENSION MECHANISMS |
| 2-J04 | 2801 | REAR SPRING & DAMPER |
| 2-K04 | 2810 | REAR STABILIZER |
| 2-L04 | 2830 | REAR LOWER ARMS & SUB FRAME |
| 2-N04 | 3200 | STEERING WHEEL (W/O AIR BAG) |
| 2-E05 | 3200 A | STEERING WHEEL (W/ AIR BAG) |
| 2-G05 | 3210 | STEERING COLUMN & SHAFTS |
| 2-I05 | 3220 A | STEERING GEAR (W/ POWER STEERING:ENGINE REVOLUTION PER MINUTE SENSOR) (GTU,'90-GXL,'90-CONV-W/O AIR BAG) |
| 2-L05 | 3220 B | STEERING GEAR (W/ POWER STEERING:VELOCITY SENSOR) (GTUS,'90-GXL,TURBO,'89-CONV,'90-CONV-W/AIR BAG) |
| 2-C06 | 3240 | POWER STEERING SYSTEM |
| 2-F06 | 3300 | FRONT AXLE |
| 2-H06 | 3310 | FRONT BRAKE MECHANISMS |
| 2-K06 | 3400 | FRONT SUSPENSION MECHANISMS |
| 2-M06 | 3401 | FRONT SPRING & DAMPER |
| 2-N06 | 3410 | CROSSMEMBER & STABILIZER |
| 2-C07 | 3700 | TIRES & JACK |
| 2-C08 | 3900 | ENGINE & T/MISSION MOUNTINGS (MT) |
| 2-D08 | 3900A | ENGINE & T/MISSION MOUNTINGS (AT) |
| 2-E08 | 4000 | EXHAUST SYSTEM (W/O TURBO) |
| 2-I08 | 4000 A | EXHAUST SYSTEM (TURBO) |
| 2-M08 | 4140 | CLUTCH RELEASE & MASTER CYLINDERS (MANUAL TRANSMISSION) |
| 2-C09 | 4145 | CLUTCH PIPINGS (MANUAL TRANSMISSION) |
| 2-D09 | 4160 | ACCELERATOR CONTROL SYSTEM |
| 2-E09 | 4200 | FUEL TANK |
| 2-H09 | 300 | CLUTCH & BRAKE PEDALS (MANUAL TRANSMISSION) |
| 2-K09 | 4300A | BRAKE PEDALS (AUTOMATIC TRANSMISSION) |
| 2-M09 | 4340 | BRAKE MASTER CYLINDER & POWER BRAKE (W/O TURBO) |
| 2-C10 | 4340 A | BRAKE MASTER CYLINDER & POWER BRAKE (TURBO) |
| 2-E10 | 4360 | BRAKE PIPINGS (W/O TURBO) |
| 2-G10 | 4360 A | BRAKE PIPINGS (TURBO) |
| 2-J10 | 4370 | ANTILOCK BRAKE SYSTEM (TURBO) |
| 2-N10 | 4400 | PARKING BRAKE SYSTEM |
| 2-D11 | 4500 | FUEL PIPINGS |
| 2-H11 | 4600 | CHANGE CONTROL SYSTEM (AT) |

## SECTION NAME INDEX (BODY)1/2

| LO.NO | SEC.NO | SECTION NAME |
|---|---|---|
| 3-C03 | 0900 | KEY SETS |
| 3-F03 | 5000 | FRONT BUMPER |
| 3-H03 | 5010 | REAR BUMPER |
| 3-J03 | 5020 | HEAD LAMP CLEANER |
| 3-L03 | 5030 | WINDOW MOULDINGS |
| 3-M03 | 5040 | BODY MOULDINGS (COUPE) |
| 3-E04 | 5060 | SIDE PROTECTORS |
| 3-I04 | 5100 | HEAD LAMPS |
| 3-J04 | 5103 | HEAD LAMP RETRACTORS |
| 3-N04 | 5105 | FRONT COMBINATION LAMPS |
| 3-G05 | 5110 | REAR COMBINATION LAMPS |
| 3-K05 | 5120 | LICENSE LAMPS |
| 3-M05 | 5125 | INTERIOR LAMPS |
| 3-N05 | 5130 | OVERHEAD CONSOLE |
| 3-C06 | 5170 | ORNAMENTS |
| 3-D06 | 5180 | COWL & EXTRACTOR GRILLES |
| 3-G06 | 5230 | BONNET |
| 3-J06 | 5260 | TRUNK LID (CONVERTIBLE) |
| 3-L06 | 5310 | BODY PANELS (FRONT) (COUPE) |
| 3-C07 | 5310 A | BODY PANELS (FRONT) (CONVERTIBLE) |
| 3-F07 | 5320 | BODY PANELS (FENDER & WHEEL APRON) |
| 3-K07 | 5330 | BODY PANELS (DASH & COWL PANEL) |
| 3-L07 | 5340 | BODY PANELS (SIDE) (COUPE) |
| 3-E08 | 5340A | BODY PANELS (SIDE) (CONVERTIBLE) |
| 3-K08 | 5360 | BODY PANELS (ROOF) (W/O SUN ROOF) |
| 3-L08 | 5360 A | BODY PANELS (ROOF) (SUN ROOF) |
| 3-M08 | 5370 | BODY PANELS (FLOOR) (COUPE) |
| 3-D09 | 5370 A | BODY PANELS (FLOOR) (CONVERTIBLE) |
| 3-H09 | 5380 | FLOOR ATTACHMENTS (HOLE COVERS) |
| 3-J09 | 5390 | FLOOR ATTACHMENTS |
| 3-C10 | 5500 | DASHBOARD EQUIPMENTS |
| 3-F10 | 5520 | METER HOOD |
| 3-G10 | 5530 | SPEEDOMETER CABLE |
| 3-H10 | 5540 | METER COMPONENTS |
| 3-J10 | 5560 | DASHBOARD & RELATED PARTS |
| 3-E11 | 5570 | CONSOLE |
| 3-H11 | 5580 | VENTILATOR |
| 3-J11 | 5700 | FRONT SEATS (COUPE) |
| 3-E13 | 5700A | FRONT SEATS (CONVERTIBLE) |
| 3-K13 | 5750 | REAR SEATS (COUPE) |
| 3-M13 | 5790 | SEAT BELTS (COUPE) |
| 3-C14 | 5790A | SEAT BELTS (CONVERTIBLE) |
| 3-D14 | 5800 | FRONT DOORS (COUPE) |
| 3-G14 | 5800A | FRONT DOORS (CONVERTIBLE) |
| 3-K14 | 5830 | FRONT DOOR MECHANISMS (COUPE) |
| 3-F15 | 5830A | FRONT DOOR MECHANISMS (CONVERTIBLE) |
| 3-J15 | 5840 | FRONT DOOR TRIMS & RELATED PARTS (COUPE) |
| 3-H16 | 5840A | FRONT DOOR TRIMS & RELATED PARTS (CONVERTIBLE) |

CATLOG-NO= AUFA02-06

DATE. 1992-05

SECTION NAME INDEX (BODY)2/2

| LO.NO | SEC.NO | SECTION NAME |
|---|---|---|
| 4-C03 | 6100 | HEATER |
| 4-E03 | 6110 | HEATER UNIT COMPONENTS |
| 4-F03 | 6115 | HEATER CONTROLS COMPONENTS |
| 4-G03 | 6120 | HEATER BLOWER COMPONENTS |
| 4-I03 | 6130 | AIR CONDITIONER |
| 4-J03 | 6230 | LIFT GATE MECHANISMS (COUPE) |
| 4-M03 | 6300 | WINDOW GLASSES (COUPE) |
| 4-N03 | 6300A | WINDOW GLASSES (CONVERTIBLE) |
| 4-C04 | 6330 | SUNROOF (COUPE) |
| 4-G04 | 6330A | SUNROOF (CONVERTIBLE) |
| 4-M04 | 6600 | SWITCHES & RELAYS (ENGINE) |
| 4-G05 | 6610 | DASHBOARD SWITCHES |
| 4-H05 | 6611 | COMBINATION SWITCH |
| 4-I05 | 6612 | CLUSTER SWITCH |
| 4-L05 | 6615 | POWER WINDOW SWITCHES |
| 4-M05 | 6630 | RELAYS & UNIT (BODY) |
| 4-D06 | 6635 | DOOR SWITCH & HORNS |
| 4-E06 | 6640 | AUTO CRUISE CONTROL SYSTEM |
| 4-F06 | 6680 | AUDIO SYSTEMS (RADIO & TAPE DECK) (COUPE) |
| 4-K06 | 6680 A | AUDIO SYSTEMS (RADIO & TAPE DECK) (CONVERTIBLE) |
| 4-M06 | 6682 | AUDIO SYSTEMS (ANTENNA & SPEAKER) (COUPE) |
| 4-D07 | 6682 A | AUDIO SYSTEMS (ANTENNA & SPEAKER) (CONVERTIBLE) |
| 4-G07 | 6684 | AUDIO SYSTEMS(NOISE SUPPRESSOR & EARTH CORD) |
| 4-H07 | 6700 | WIRING HARNESSES(FRONT & REAR) |
| 4-N07 | 6701 | WIRING HARNESSES(ENGINE & T/MISSION) |
| 4-D08 | 6702 | WIRING HARNESSES(DASHBOARD) |
| 4-E08 | 6703 | WIRING HARNESSES(DOOR,FLOOR/CEILING) |
| 4-G08 | 6704 | WIRING HARNESS CLAMPS |
| 4-J08 | 6720 | WINDSHIELD WASHER (1.5L & 2.5L) |
| 4-L08 | 6720 A | WINDSHIELD WASHER (5.7L) |
| 4-N08 | 6730 | WINDSHIELD WIPERS |
| 4-C09 | 6740 | WIPER MOTOR COMPONENTS(FRONT) |
| 4-D09 | 6750 | WINDOW WIPER & WASHER (REAR) |
| 4-G09 | 6760 | WINDOW WIPER MOTOR COMPONENTS (REAR) |
| 4-H09 | 6800 | CEILING TRIMS (COUPE) |
| 4-J09 | 6800A | CEILING TRIMS (CONVERTIBLE) |
| 4-K09 | 6810 | ROLLEBAR (CONVERTIBLE) |
| 4-N09 | 6820 | PILLAR TRIMS (COUPE) |
| 4-F10 | 6820A | PILLAR TRIMS (CONVERTIBLE) |
| 4-G10 | 6840 | TRIMS & SCUFF PLATES (COUPE) |
| 4-L10 | 6840A | TRIMS & SCUFF PLATES (CONVERTIBLE) |
| 4-N10 | 6845 | STRAGE BOX (COUPE) (GXL,TURBO) |
| 4-D11 | 6860 | FLOOR MATS & PADS (COUPE) |
| 4-K11 | 6860A | FLOOR MATS & PADS (CONVERTIBLE) |
| 4-C12 | 6870 | SERVICE TOOLS |
| 4-D12 | 6900 | VISORS,ASSIST HANDLES & MIRRORS (COUPE) |
| 4-H12 | 6900A | VISORS,ASSIST HANDLES & MIRRORS (CONVERTIBLE) |
| 4-K12 | 6930 | CAUTION PLATES & LABELS |
| 4-N12 | 7250 | QUARTER WINDOW & TRIMS |
| 4-E13 | 7800 | SPOILERS & RELATED PARTS |
| 4-C14 | 7900 | ACCESSORIES |

| LO.NO | SEC.NO | SECTION NAME |
|---|---|---|
| 3-C03 | 0900 | KEY SETS |
| 3-F03 | 5000 | FRONT BUMPER |
| 3-H03 | 5010 | REAR BUMPER |
| 3-J03 | 5020 | HEAD LAMP CLEANER |
| 3-L03 | 5030 | WINDOW MOULDINGS |
| 3-M03 | 5040 | BODY MOULDINGS (COUPE) |
| 3-E04 | 5060 | SIDE PROTECTORS |
| 3-I04 | 5100 | HEAD LAMPS |
| 3-J04 | 5103 | HEAD LAMP RETRACTORS |
| 3-N04 | 5105 | FRONT COMBINATION LAMPS |
| 3-G05 | 5110 | REAR COMBINATION LAMPS |
| 3-K05 | 5120 | LICENSE LAMPS |
| 3-M05 | 5125 | INTERIOR LAMPS |
| 3-N05 | 5130 | OVERHEAD CONSOLE |
| 3-C06 | 5170 | ORNAMENTS |
| 3-D06 | 5180 | COWL & EXTRACTOR GRILLES |
| 3-G06 | 5230 | BONNET |
| 3-J06 | 5260 | TRUNK LID (CONVERTIBLE) |
| 3-L06 | 5310 | BODY PANELS (FRONT) (COUPE) |
| 3-C07 | 5310 A | BODY PANELS (FRONT) (CONVERTIBLE) |
| 3-F07 | 5320 | BODY PANELS (FENDER & WHEEL APRON) |
| 3-K07 | 5330 | BODY PANELS (DASH & COWL PANEL) |
| 3-L07 | 5340 | BODY PANELS (SIDE) (COUPE) |
| 3-E08 | 5340A | BODY PANELS (SIDE) (CONVERTIBLE) |
| 3-K08 | 5360 | BODY PANELS (ROOF) (W/O SUN ROOF) |
| 3-L08 | 5360 A | BODY PANELS (ROOF) (SUN ROOF) |
| 3-M08 | 5370 | BODY PANELS (FLOOR) (COUPE) |
| 3-D09 | 5370 A | BODY PANELS (FLOOR) (CONVERTIBLE) |
| 3-H09 | 5380 | FLOOR ATTACHMENTS (HOLE COVERS) |
| 3-J09 | 5390 | FLOOR ATTACHMENTS |
| 3-C10 | 5500 | DASHBOARD EQUIPMENTS |
| 3-F10 | 5520 | METER HOOD |
| 3-G10 | 5530 | SPEEDOMETER CABLE |
| 3-H10 | 5540 | METER COMPONENTS |
| 3-J10 | 5560 | DASHBOARD & RELATED PARTS |
| 3- | 5570 | CONSOLE |
| 3-H1 | 5580 | VENTILATOR |
| 3-J11 | 5700 | FRONT SEATS (COUPE) |
| 3-E13 | 5700A | FRONT SEATS (CONVERTIBLE) |
| 3-K13 | 5750 | REAR SEATS (COUPE) |
| 3-M13 | 5790 | SEAT BELTS (COUPE) |
| 3-C14 | 5790A | SEAT BELTS (CONVERTIBLE) |
| 3-D14 | 5800 | FRONT DOORS (COUPE) |
| 3-G14 | 5800A | FRONT DOORS (CONVERTIBLE) |
| 3-K14 | 5830 | FRONT DOOR MECHANISMS (COUPE) |
| 3-F15 | 5830A | FRONT DOOR MECHANISMS (CONVERTIBLE) |
| 3-J15 | 5840 | FRONT DOOR TRIMS & RELATED PARTS (COUPE) |
| 3-H16 | 5840A | FRONT DOOR TRIMS & RELATED PARTS (CONVERTIBLE) |

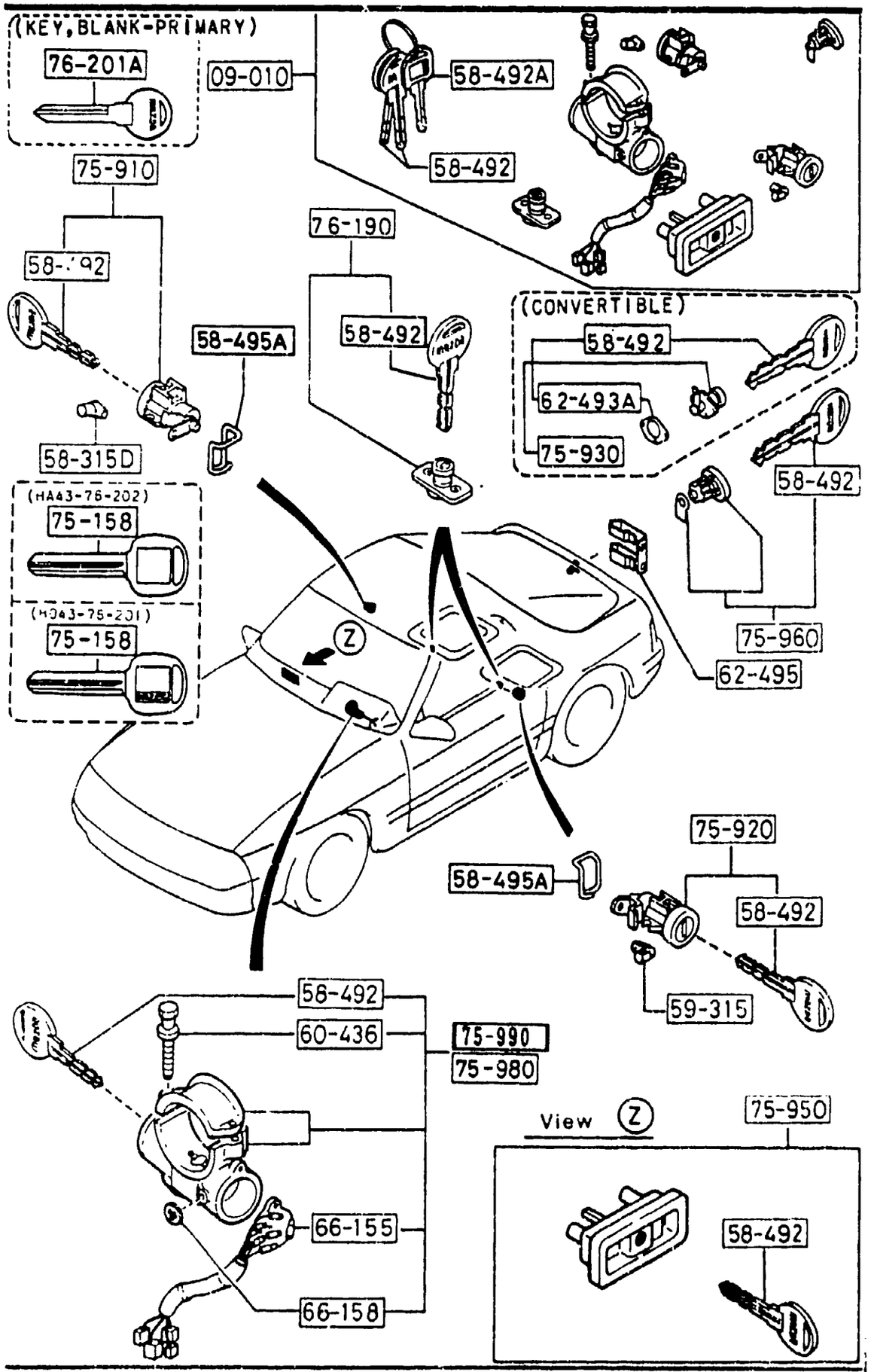




| PART NO. | QTY | MODEL/RESTRICTION | MODEL/RESTRICTION | MODEL/RESTRICTION | FROM-TO |
|---|---|---|---|---|---|
| 09-010 | | KEY SET | | | |
| FC01-09-010 | 1 | GXL, (W/O STORAGE BOX) ((CPE))(MT) ) | | | |
| 02 | | FD8 FE1 BLACK | | | |
| 19 | | FE0 RED | | | |
| 48 | | FD9 BLUE | | | |
| FC02-09-010 | 1 | GTU, GTUS, GXL, TURBO, (W/STORAGE BOX) ((CPE))(MT) ) | | | |
| 02 | | FD8 FE1 BLACK | | | |
| 19 | | FE0 RED | | | |
| 48 | | FD9 BLUE | | | |
| FC07-09-010 | 1 | GTU, GTUS, GXL, TURBO, (W/STORAGE BOX) ((CPE))(AT) ) | | | |
| 02 | | FD8 FE1 BLACK | | | |
| 19 | | FE0 RED | | | |
| 48 | | FD9 BLUE | | | |
| FC24-09-010 | 1 | GXL, (W/O STORAGE BOX) ((CPE))(AT) ) | | | |
| 02 | | FD8 FE1 BLACK | | | |
| 19 | | FE0 RED | | | |
| 48 | | FD9 BLUE | | | |
| FC33-09-010 | 1 | ((CONVERTIBLE))(MT))(W/O AIR BAG) ) | | | |
| 02 | | FD8 FE1 BLACK | | | |
| 48 | | FD9 BLUE | | | |
| FC47-09-010 | 1 | ((CONVERTIBLE))(AT))(W/O AIR BAG) ) | | | |
| 02 | | FD8 FE1 BLACK | | | |
| 48 | | FD9 BLUE | | | |
| FC66-09-010 | 1 | ((CONVERTIBLE))(MT))(W/AIR BAG) ) | | | |
| 02 | | FD8 FE1 BLACK | | | |
| 48 | | FD9 BLUE | | | |
| FC67-09-010 | 1 | ((CONVERTIBLE))(AT))(W/AIR BAG) ) | | | |

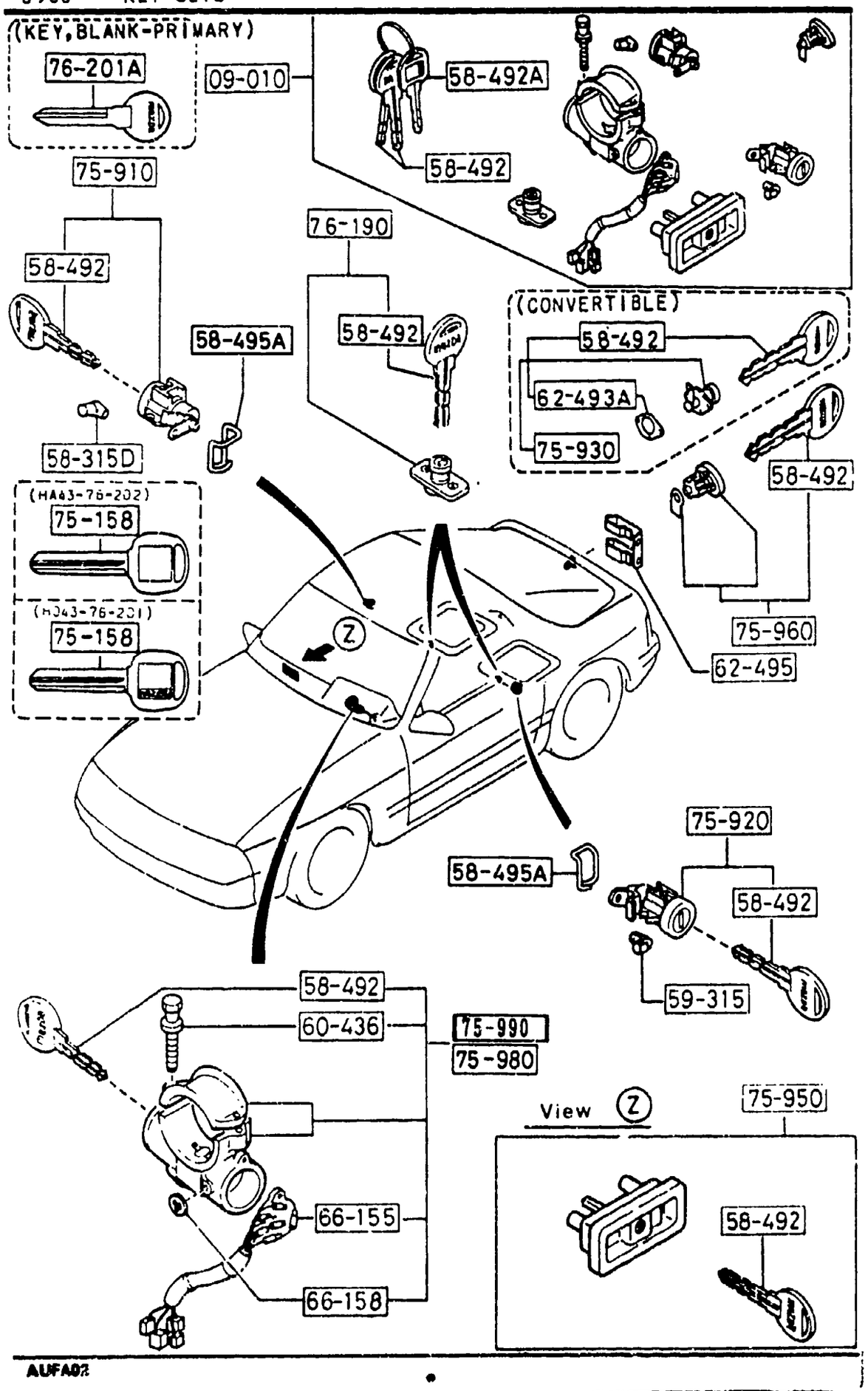




| PART NO. | QTY | MODEL/RESTRICTION | MODEL/RESTRICTION | MODEL/RESTRICTION | FROM-TO |
|---|---|---|---|---|---|
| CONT'D | | | | | |
| 02 | | FD8 FE1 BLACK | | | |
| 48 | | FD9 BLUE | | | |
| \| 58-315D \| | | CLIP (R) | | | |
| G030-58-315 | 1 | | | | |
| \| 58-492 \| | | KEY,PRIMARY | | | |
| H043-58-492 | 2 | KEY NO.IS REQUIRED | | | |
| \| 58-492A \| | | KEY,SECONDARY | | | |
| H043-58-493 | 2 | KEY NO.IS REQUIRED | | | |
| \| 58-495A \| | | RETAINER,LOCK CYL. | | | |
| FB01-58-495 | 2 | | | | |
| \| 59-315 \| | | CLIP | | | |
| G030-59-315 | 1 | | | | |
| \| 60-436 \| | | BOLT,SET | | | |
| H043-66-154 | 2 | | | | |
| \| 62-493A \| | | GASKET,KEY CYLINDER | | | |
| FB67-56-904 | 1 | (CONVERTIBLE) | | | |
| \| 62-495 \| | | RETAINER,LOCK CYL. | | | |
| FB01-62-495 | 1 | (CPE) | | | |
| \| 66-155 \| | | SWITCH,IGNITION | | | |
| FC01-66-151 | 1 | (AT)<br>((MT))(W/AIR BAG) ) | | | |
| FC02-66-151 | 1 | ((MT))(W/O AIR BAG) ) | | | |
| \| 66-158 \| | | NUT,SPEED-STEERING LOCK | | | |
| BC46-66-158 | 2 | | | | |
| \| 75-158 \| | | KEY,BLANK | | | |
| HA43-76-202 | 1 | | | | -9801 |
| H043-76-201 | 1 | | | | 9801- |

9801 FC3NNN-804224

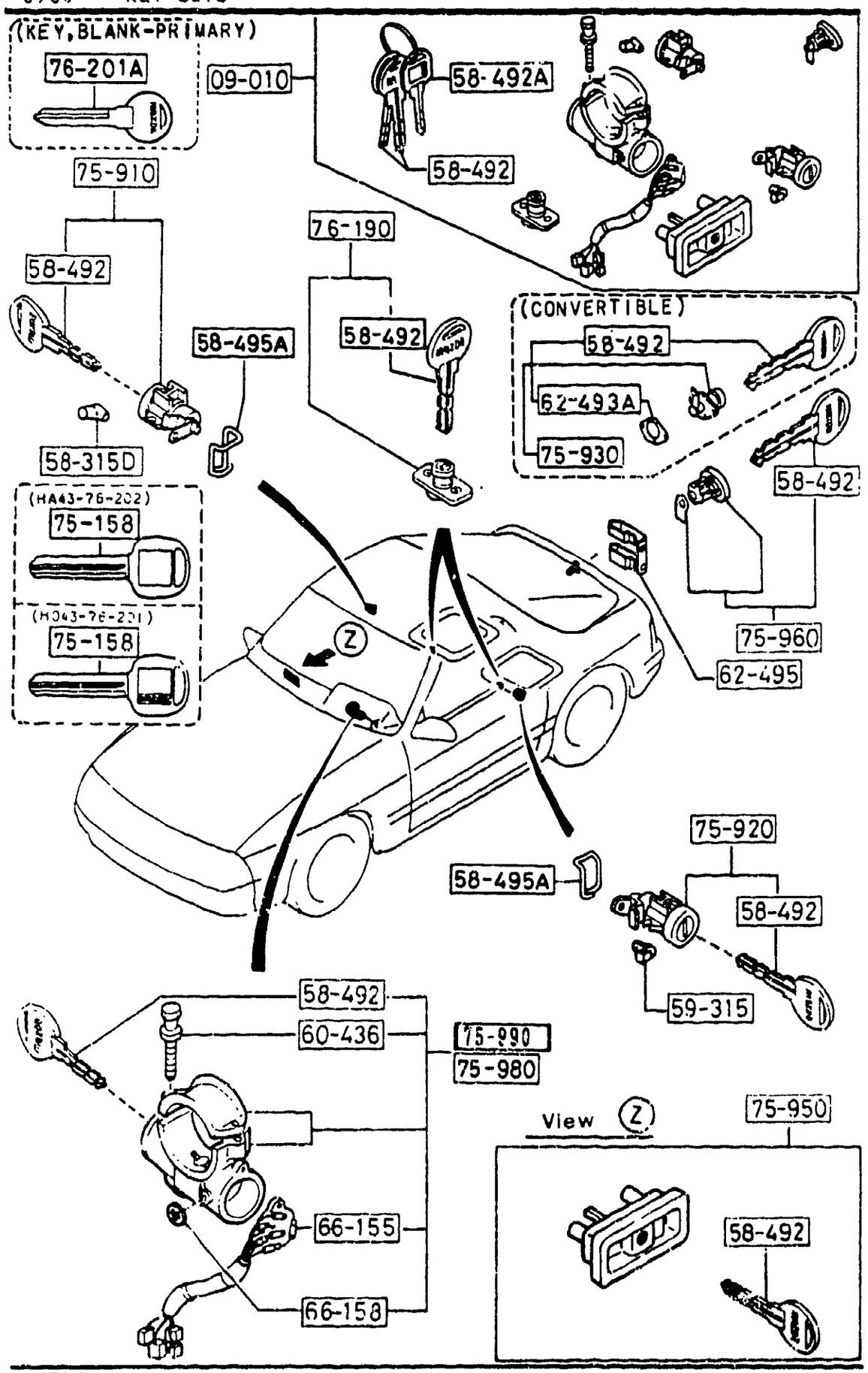


AUFA02

0900 -3 * KEY SETS

| PART NO. | QTY | MODEL/RESTRICTION | MODEL/RESTRICTION | MODEL/RESTRICTION | FROM-TO |
|---|---|---|---|---|---|
| 75-910 | | KEY SUB SET(R),DOOR | | | |
| FB01-76-210B | 1 | | | | |
| 75-920 | | KEY SUB SET(L),DOOR | | | |
| FB01-76-220B | 1 | | | | |
| 75-930 | | KEY SUB SET,TRUNK | | | |
| FB68-76-230 | 1 | (CONVERTIBLE) | | | |
| 75-950 | | KEY SUB SET,GLOVE | | | |
| FB02-76-250 | 1 | | | | |
| 02 | | FD8 FE1 BLACK | | | |
| 19 | | FE0 RED | | | |
| 48 | | FD9 BLUE | | | |
| 75-960 | | KEY SUB SET,LIFT GATE | | | |
| FB01-76-260 | 1 | (CPE) | | | |
| 75-980 | | KEY SUB SET,IG.SWICH | | | |
| FC01-76-290 | 1 | ((MT)>(W/O AIR BAG)) | | | |
| FC07-76-290 | 1 | ((AT)>(W/O AIR BAG)) | | | |
| 75-990 | | KEY SUB SET,ST.LOCK | | | |
| FC66-76-290 | 1 | ((MT)>(W/AIR BAG)) | | | |
| FC67-76-290 | 1 | ((AT)>(W/AIR BAG)) | | | |
| 76-190 | | KEY SUB SET,STORAGE | | | |
| FB02-76-190 | 1 | (CPE) | | | |
| 76-201A | | KEY,BLANK-PRIMARY | | | |
| HA43-76-201A | 1 | | | | |

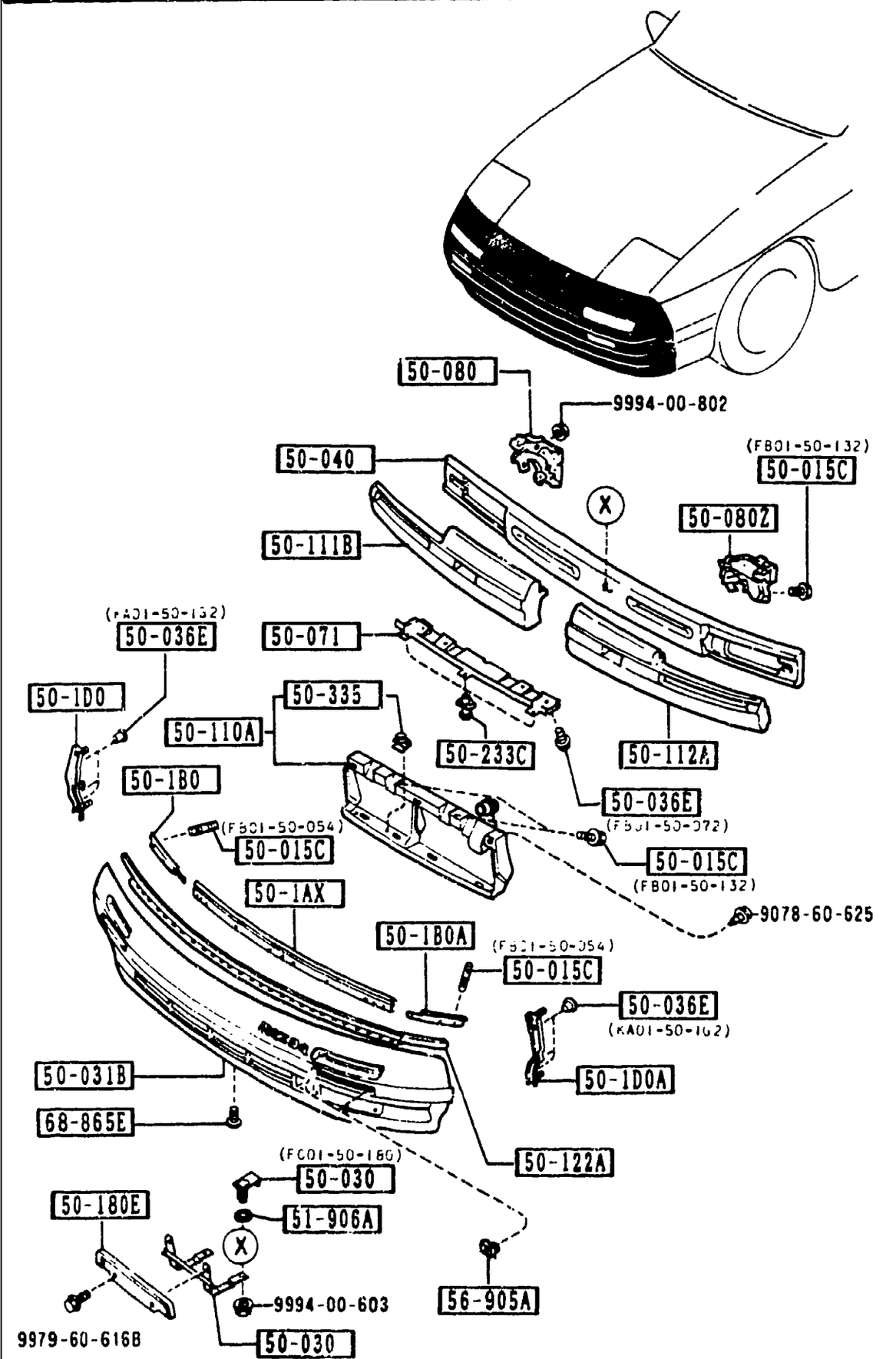


| PART NO. | QTY | MODEL/RESTRICTION | MODEL/RESTRICTION | MODEL/RESTRICTION | FROM-TO |
|---|---|---|---|---|---|
| 50-015C | | BOLT | | | |
| FB01-50-054 | 2 | | | | |
| FB01-50-132 | 4 | | | | |
| 50-030 | | HOLDER,NO. PLATE | | | |
| FB01-50-140 | 1 | | | | |
| FC01-50-180 | 2 | | | | |
| 50-031B | | FASCIA,FRONT | | | |
| FC01-50-031 | 1 | | | | |
| 50-036E | | CLIP | | | |
| KA01-50-162 | 6 | | | | |
| FB01-50-072 | 4 | | | | -9301 |
| FB01-50-072 | 3 | | | | 9301- |
| 50-040 | | REINFORCEMENT,BUMPER | | | |
| FC01-50-071 | 1 | | | | |
| 50-071 | | PLATE,SEAL-FRONT BUMPER | | | |
| FB01-50-071 | 1 | | | | |
| 50-080 | | STAY(R),FRONT BUMPER | | | |
| FB01-50-080 A (FB01-50-080A) | 1 | | | | -9823 |
| FB01-50-080A | 1 | | | | 9823- |
| 50-080Z | | STAY(L),FRONT BUMPER | | | |
| FB01-50-090 A (FB01-50-090A) | 1 | | | | -9823 |
| FB01-50-090A | 1 | | | | 9823- |
| 50-1AX | | PLATE NO.1,SET-F. BUMPER | | | |
| FC01-50-1A0 | 1 | | | | |
| 50-1B0 | | PLATE NO.2(R),SET-F. BUMPER | | | |
| FC01-50-1B0 | 1 | | | | |
| 50-1B0A | | PLATE NO.2(L),SET-F. BUMPER | | | |
| FC01-50-1C0 | 1 | | | | |

9301 FC3***-704194
9823 FC3***-801679

## 5000 FRONT BUMPER

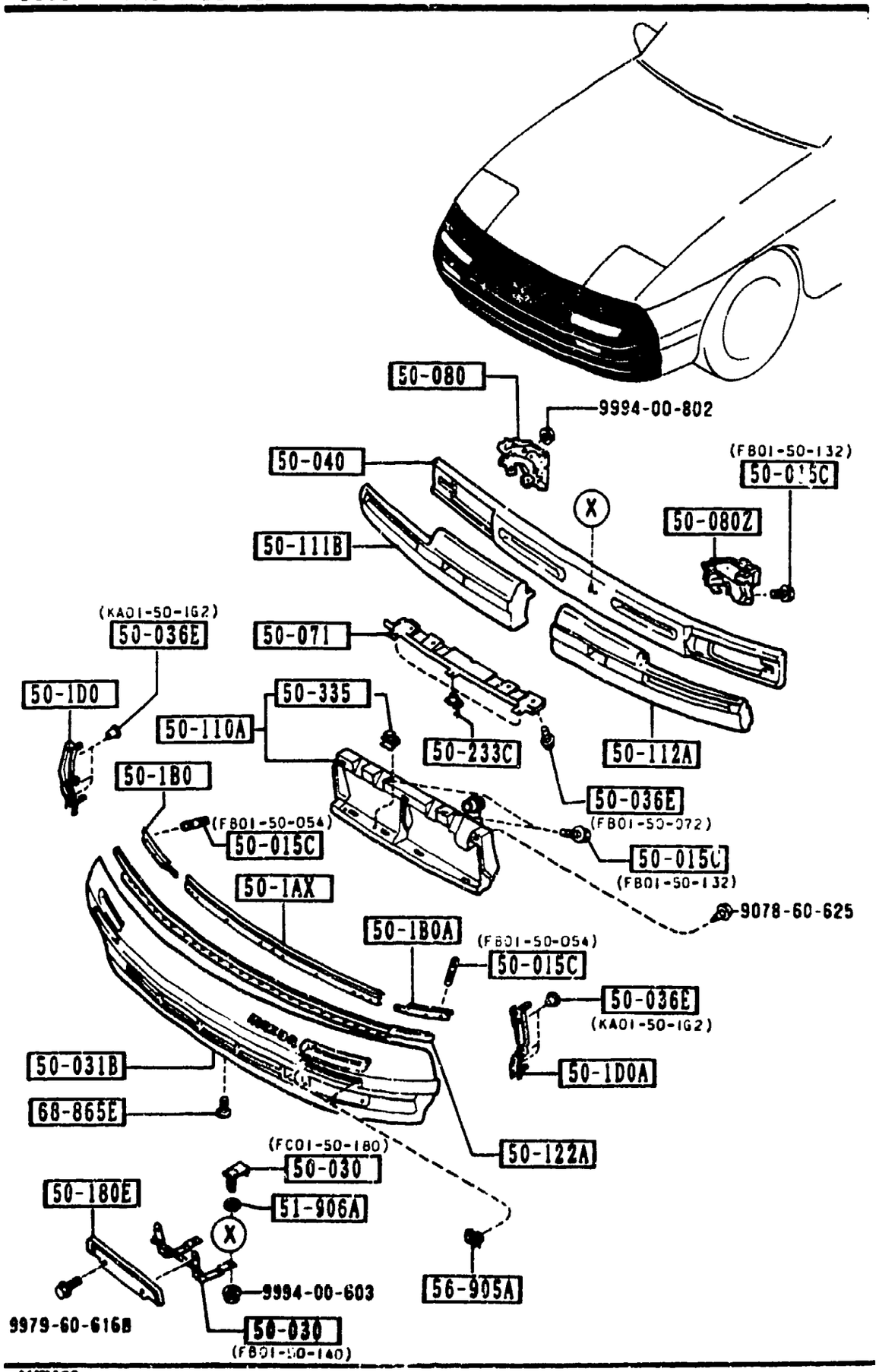


| PART NO. | QTY | MODEL/RESTRICTION | MODEL/RESTRICTION | MODEL/RESTRICTION | FROM-TO |
|---|---|---|---|---|---|
| 50-1D0 | | PLATE NO.3(R),SET-F. BUMPER | | | |
| FC01-50-1D0 | 1 | | | | |
| 50-1D0A | | PLATE NO.3(L),SET-F. BUMPER | | | |
| FC01-50-1E0 | 1 | | | | |
| 50-110A | | BRACKET,BUMPER | | | |
| FC01-50-A30A | 1 | | | | |
| 50-111B | | FOAM(R),ENGY.ABS-FRT BUMP | | | |
| FC01-50-111 | 1 | | | | |
| 50-112A | | FOAM(L),ENGY.ABS-FRT BUMP | | | |
| FC01-50-112 | 1 | | | | |
| 50-122A | | RETAINER,FRT.BUMPER | | | |
| FB01-50-050A | 1 | | | | |
| 50-180E | | PROTECTOR,NO. PLATE | | | |
| FB01-50-144 | 1 | | | | |
| 50-233C | | FASTENER,REAR BUMBER | | | |
| BF82-50-233 | 3 | | | | |
| 50-335 | | NUT,CLIP | | | |
| FB01-50-133 | 4 | | | | |
| 51-906A | | WASHER,ROOF MOULD | | | |
| S232-51-906 | 2 | | | | |
| 56-905A | | NUT,SPRING | | | |
| 0820-56-905 | 4 | | | | |
| 68-865E | | FASTENER | | | |
| S049-68-865 | 2 | | | | |
| 00 | | FD8 FD9 FE0 FE1 BLACK | | | |

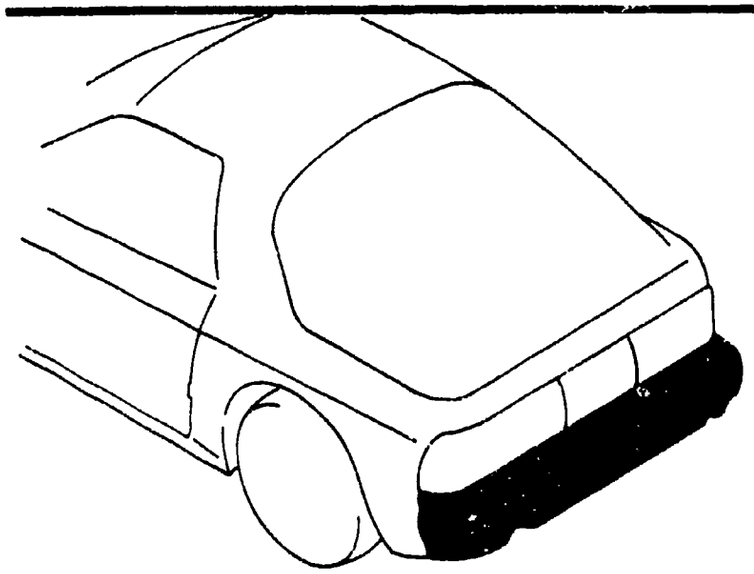

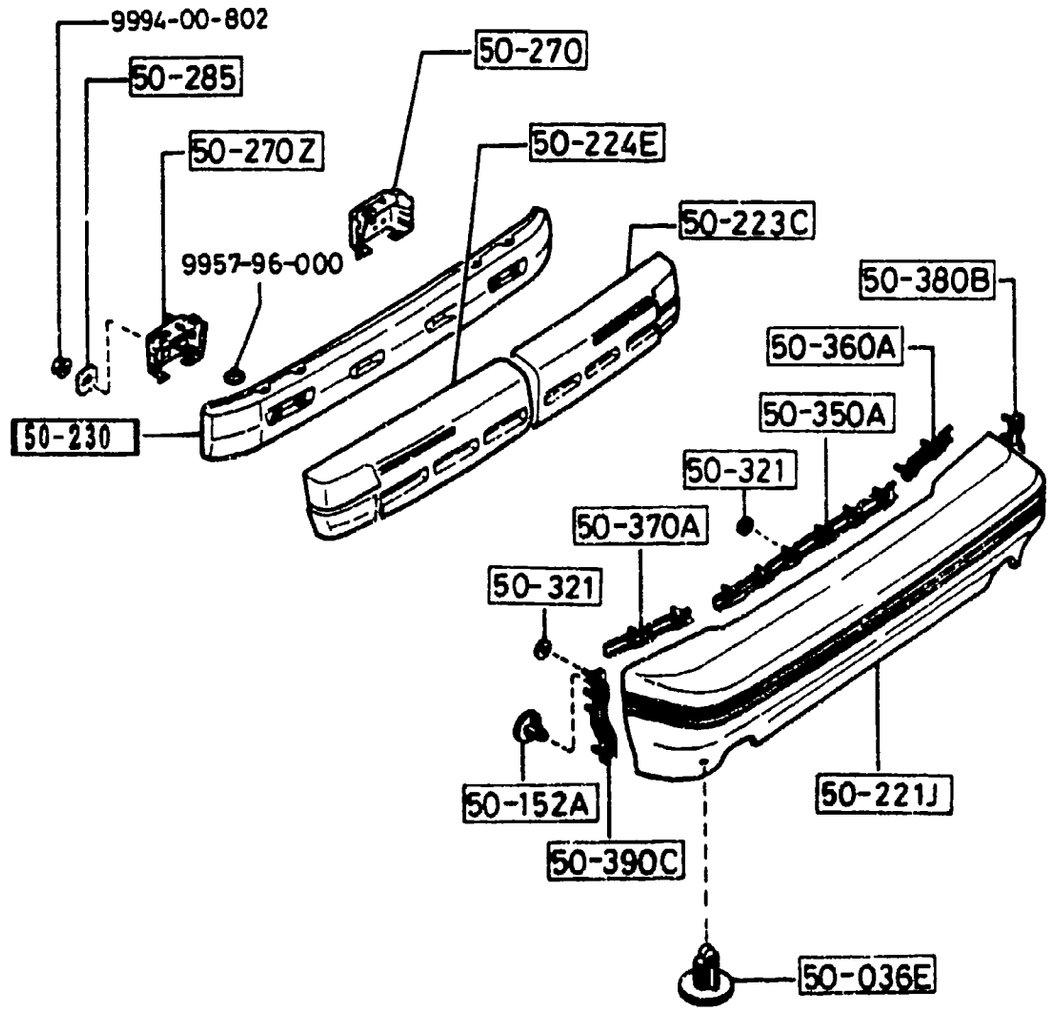




| PART NO. | QTY | MODEL/RESTRICTION | MODEL/RESTRICTION | MODEL/RESTRICTION | FROM-TO |
|---|---|---|---|---|---|
| 50-036E<br>FB01-50-072 | 6 | CLIP | | | |
| 50-152A<br>3597-50-152 | 10 | CLIP | | | |
| 50-221J<br>FC01-50-221A | 1 | BUMPER,REAR | | | |
| 50-223C<br>FC01-50-312 | 1 | FOAM(R),ENGY.ABS.-RR BUMP | | | |
| 50-224E<br>FC01-50-313 | 1 | FOAM(L),ENGY.ABS.-RR BUMP | | | |
| 50-230<br>FB01-50-330B | 1 | REINFORCEMENT,BUMPER | | | |
| 50-270<br>FB01-50-280 | 1 | STAY(R),RR. BUMPER | | | |
| 50-270Z<br>FB01-50-290 | 1 | STAY(L),RR. BUMPER | | | |
| 50-285<br>G030-50-285 | 2 | GASKET,SEAL | | | |
| 50-321<br>FB01-50-321 | 12 | GASKET'A',REAR BUMPER | | | |
| 50-350A<br>FB01-50-350 | 1 | PLATE(C),SET-REAR BUMPER | | | |
| 50-360A<br>FB01-50-360 | 1 | PLATE(R),SET-REAR BUMPER | | | |
| 50-370A<br>FB01-50-370 | 1 | PLATE(L),SET-RR BUMPER S. | | | |
| 50-380B<br>FB01-50-380 | 1 | PLATE(R),SET-RR BUMPER S. | | | |

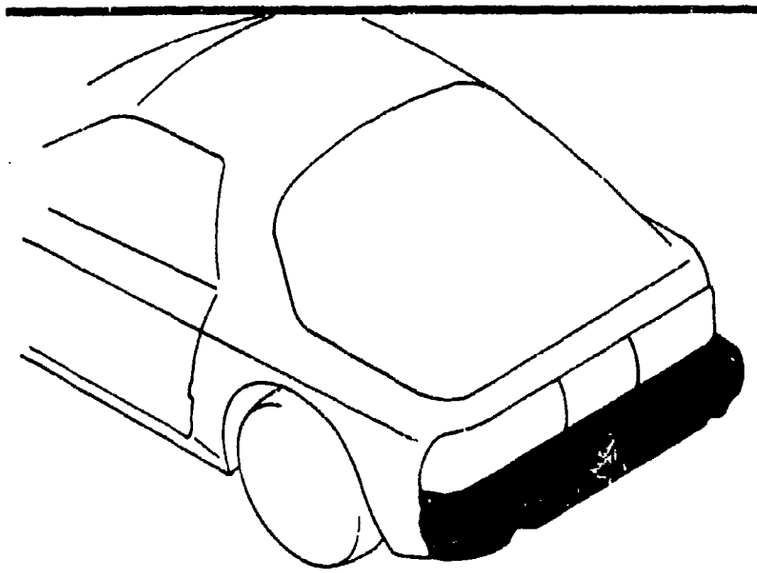

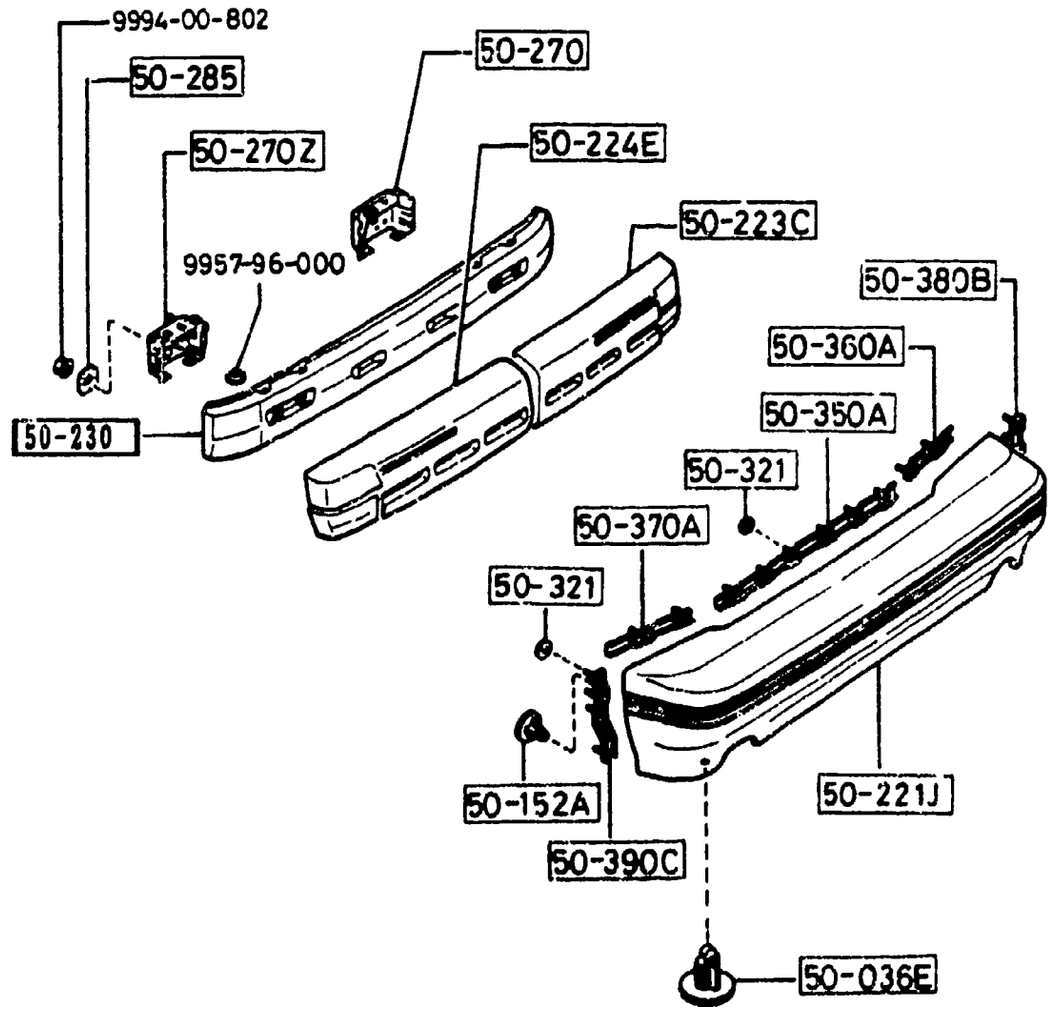




| PART NO. | QTY | MODEL/RESTRICTION | MODEL/RESTRICTION | MODEL/RESTRICTION | FROM-TO |
|---|---|---|---|---|---|
| 50-390C | | PLATE(L),SET-RR BUMPER S. | | | |
| FB01-50-390 | 1 | | | | |

5020 HEAD LAMP CLEANER

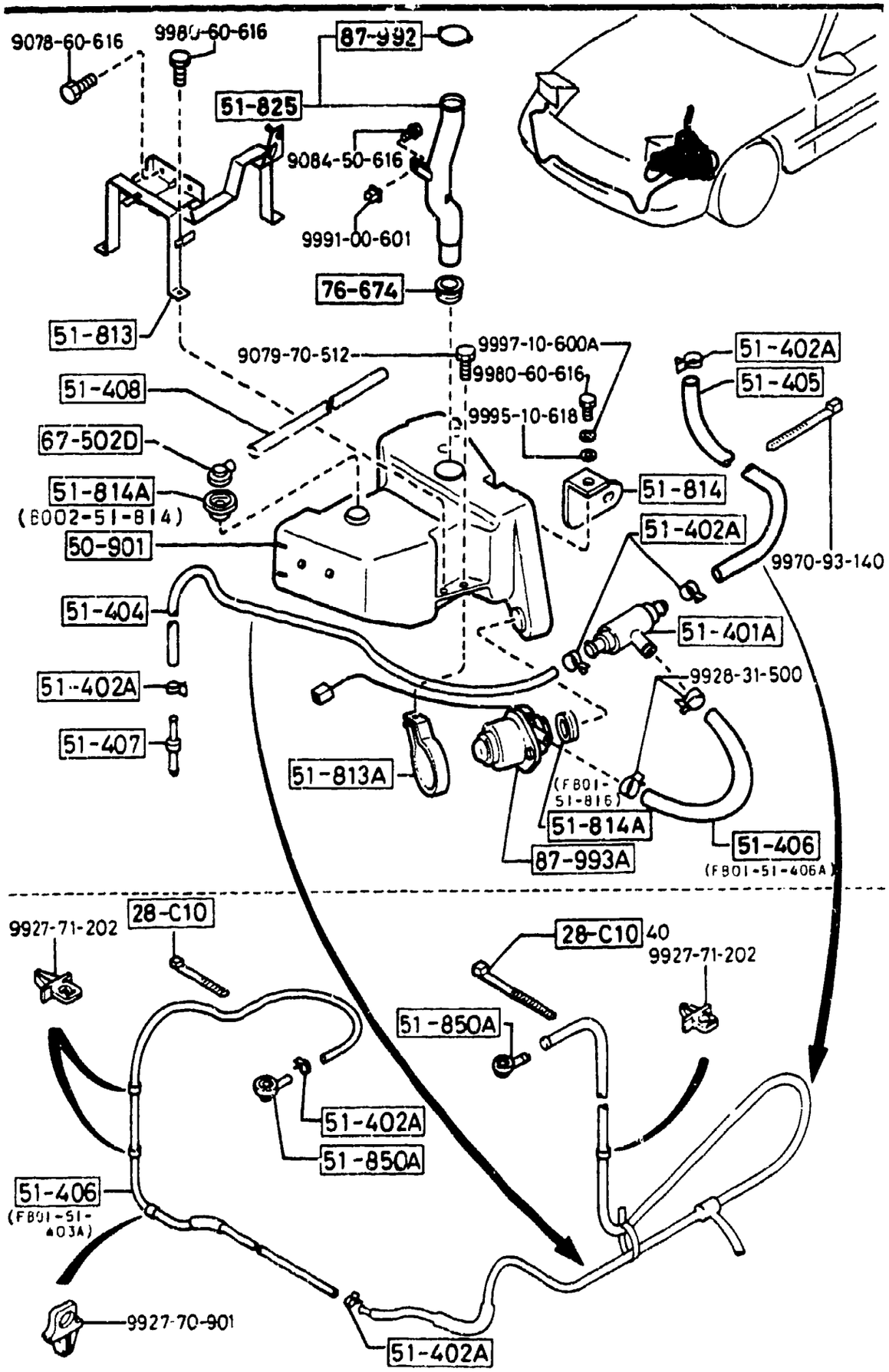


| PART NO. | QTY | MODEL/RESTRICTION | MODEL/RESTRICTION | MODEL/RESTRICTION | FROM-TO |
|---|---|---|---|---|---|
| 28-C10 | | BAND,PIPE | | | |
| B214-28-C10 | 2 | | | | |
| 50-901 | | TANK,WASHER | | | |
| FC01-51-812 | 1 | | | | |
| 51-401A | | VALVE,CHECK | | | |
| G113-51-401 | 1 | | | | |
| 51-402A | | CLIP | | | |
| 3972-51-402 | 6 | | | | |
| 51-404 | | PIPE | | | |
| FB01-51-404A | 1 | | | | |
| 51-405 | | PIPE | | | |
| FB01-51-405A | 1 | | | | |
| 51-406 | | PIPE | | | |
| FB01-51-403A | 1 | | | | |
| FB01-51-406A | 1 | | | | |
| 51-407 | | JOINT | | | |
| 8965-51-406 | 1 | | | | |
| 51-408 | | PIPE | | | |
| FB01-51-407 | 1 | | | | |
| 51-813 | | HOLDER'A' | | | |
| FB01-51-814 | 1 | | | | |
| 51-813A | | HOLDER,MOTOR-H.L.CLEANER | | | |
| FC01-51-813 | 1 | | | | |
| 51-814 | | HOLDER'B' | | | |
| FB01-51-819 | 1 | | | | |
| 51-814A | | GROMMET,WASHER TANK | | | |
| B002-51-814 | 1 | | | | |
| FB01-51-816 | 1 | | | | |

## 5020 HEAD LAMP CLEANER

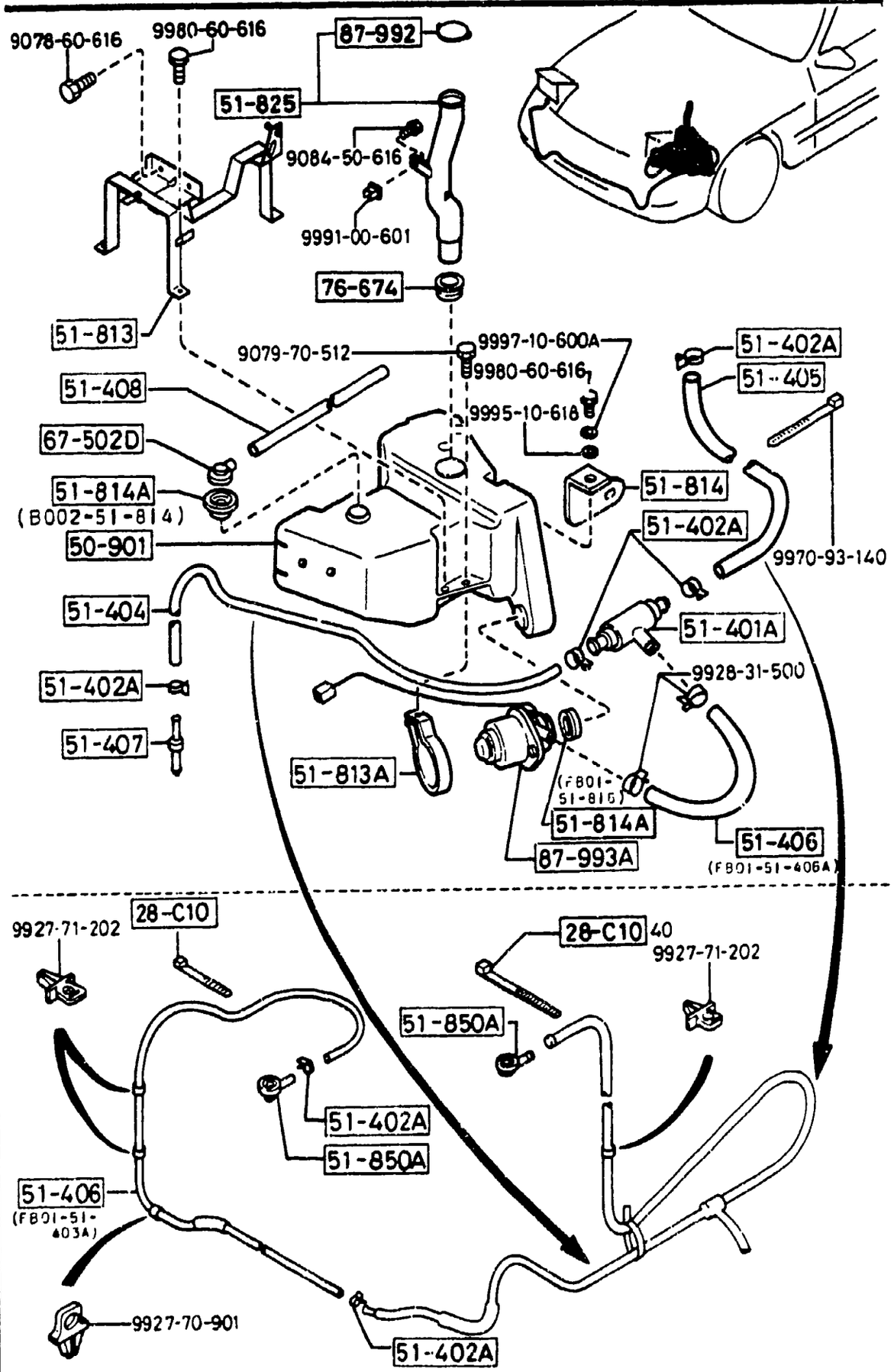


| PART NO. | QTY | MODEL/RESTRICTION | MODEL/RESTRICTION | MODEL/RESTRICTION | FROM-TO |
|---|---|---|---|---|---|
| 51-825<br>FB01-51-82XC | 1 | PIPE,FILLER-WASHER TANK | | | |
| 51-850A<br>FB01-51-850 | 2 | NOZZLE,WASHER-H.L.CLEANER | | | |
| 67-502D<br>S092-67-502 | 1 | JOINT'L' | | | |
| 76-674<br>1243-76-674 | 1 | GROMMET | | | |
| 87-992<br>H005-50-905 | 1 | CAP,TANK | | | |
| 87-993A<br>FC01-51-811 | 1 | PUMP KIT | | | |

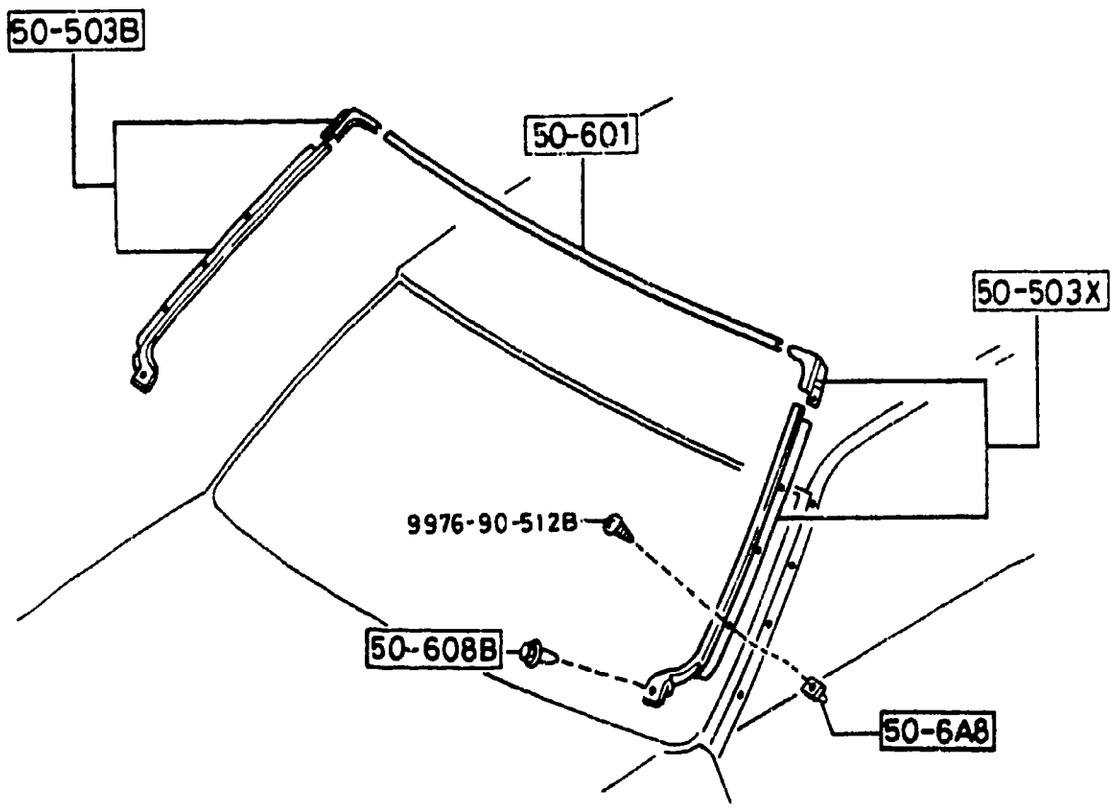


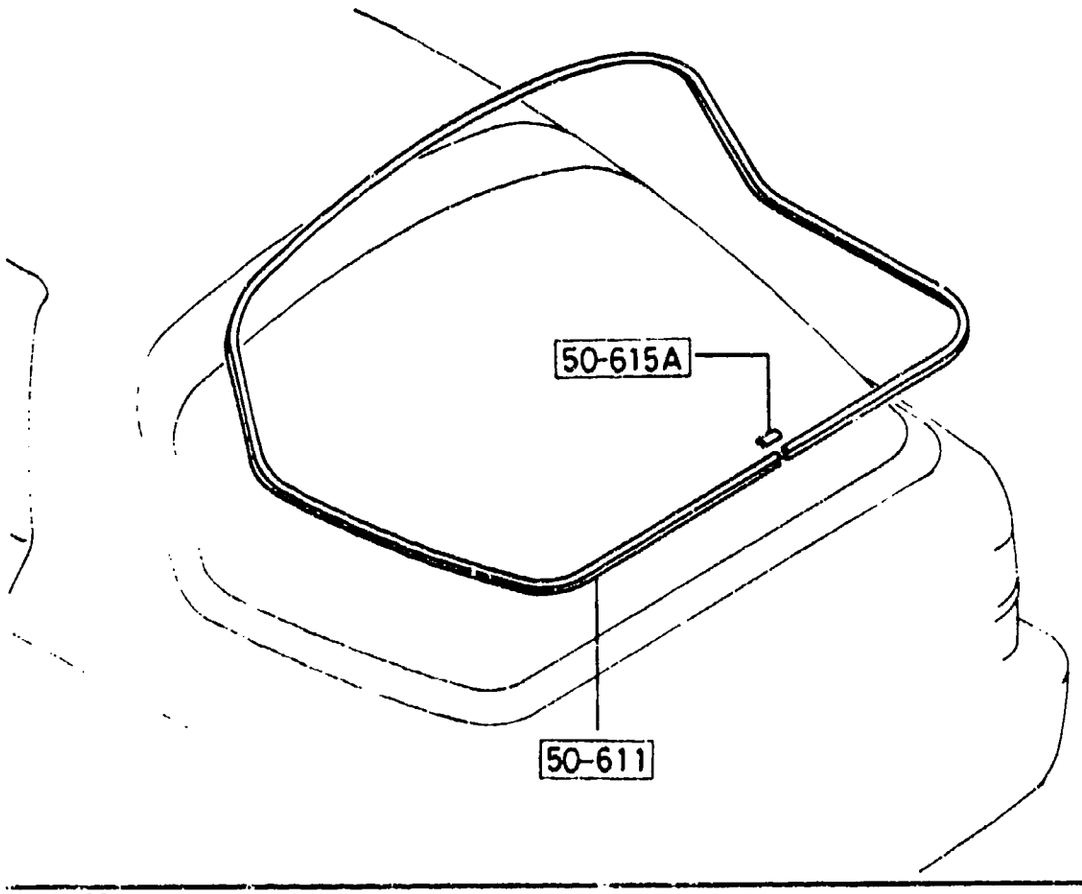


AUFA02



| PART NO. | QTY | MODEL/RESTRICTION | MODEL/RESTRICTION | MODEL/RESTRICTION | FROM-TO |
|---|---|---|---|---|---|
| 50-503B | | MOULD SET(R),F. SIDE | | | |
| 8AF1-50-860 | 1 | | | | |
| 50-503X | | MOULD SET(L),F. SIDE | | | |
| 8AF1-50-870 | 1 | | | | |
| 50-6A8 | | GROMMET,SCREW-F. WIN D.MLD | | | |
| FB01-50-6A8 | 8 | | | | |
| 50-601 | | MOULD,WINDOW-FRONT | | | |
| FB01-50-601A | 1 | | | | |
| 50-608B | | FASTENER,F.WIND.MLD. | | | |
| H260-50-6A7 | 2 | | | | |
| 50-611 | | MOULD,RR.WINDOW | | | |
| FB01-50-611C | 1 | (CPE) | | | |
| 50-615A | | JOINT,BACK WIND MOUL D | | | |
| FB01-50-615C | 1 | (CPE) | | | |

CAT. AUFA02-06

1992-05

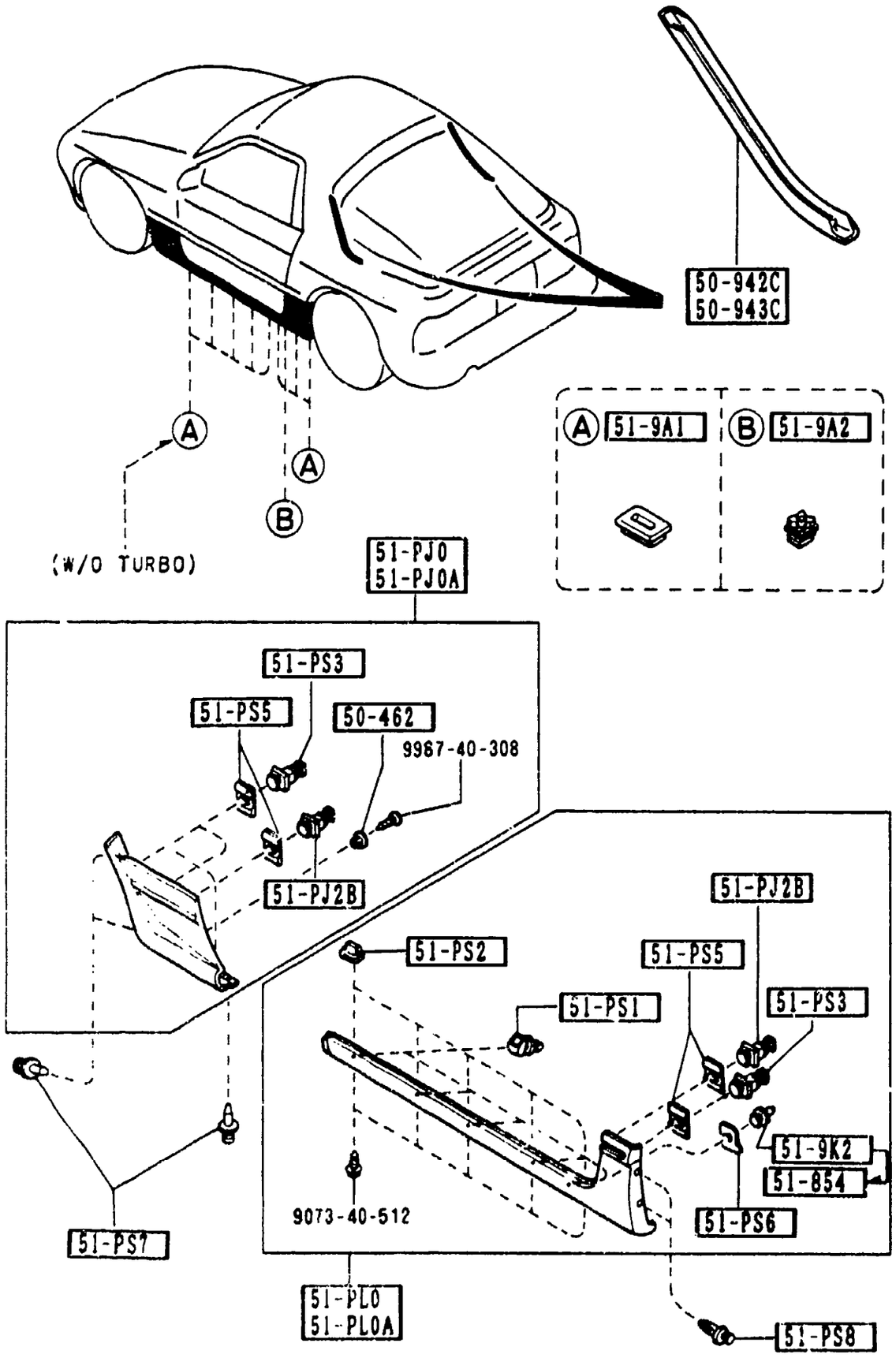






| PART NO. | QTY | MODEL/RESTRICTION | MODEL/RESTRICTION | MODEL/RESTRICTION | FROM-TO |
|---|---|---|---|---|---|
| 50-462 | | CLIP,STEP MOULD | | | |
| FC17-51-PS9 | 2 | (TURBO) | | | |
| 50-942C | | MOULD(R),REAR | | | |
| FB01-50-942A | 1 | REGULAR TYPE | | | |
| 50-943C | | MOULD(L),REAR | | | |
| FB01-50-943A | 1 | REGULAR TYPE | | | |
| 51-PJ0 | | MOULD(R),STEP-FRT | | | |
| FC17-51-PJ0A | 1 | (TURBO) | | | |
| PZ | | PZ BRILLIANT BLACK | | | |
| SQ | | SQ BLAZE RED | | | |
| UC | | UC CRYSTAL WHITE | | | |
| WY | | WY NOBLE WHITE | | | |
| 1F | | 1F WINNING SILVER M. | | | |
| 3G | | 3G SHADOW SILVER METALL | | | |
| 5D | | 5D HARBOR BLUE M. | | | |
| 6H | | 6H MELLOW BURGUNDY MC | | | |
| 51-PJ0A | | MOULD(L),STEP-FRT | | | |
| FC17-51-PP0A | 1 | (TURBO) | | | |
| PZ | | PZ BRILLIANT BLACK | | | |
| SQ | | SQ BLAZE RED | | | |
| UC | | UC CRYSTAL WHITE | | | |
| WY | | WY NOBLE WHITE | | | |
| 1F | | 1F WINNING SILVER M. | | | |
| 3G | | 3G SHADOW SILVER METALL | | | |
| 5D | | 5D HARBOR BLUE M. | | | |
| 6H | | 6H MELLOW BURGUNDY MC | | | |
| 51-PJ2B | | CLIP | | | |
| FC17-51-PJ2 | 4 | (TURBO) | | | |

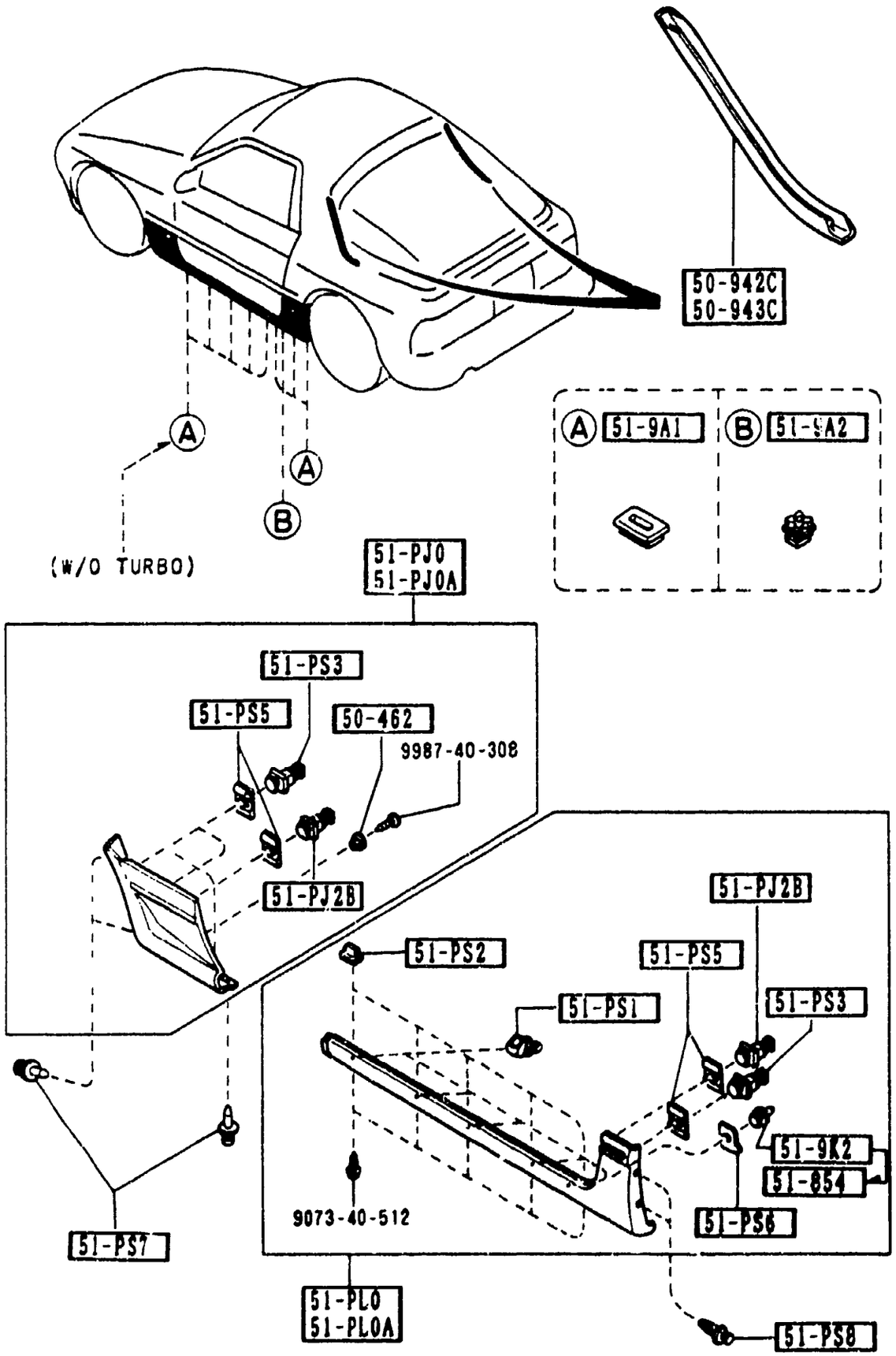






| PART NO. | QTY | MODEL/RESTRICTION | MODEL/RESTRICTION | MODEL/RESTRICTION | FROM-TO |
|---|---|---|---|---|---|
| 51-PL0 | | MOULD(R),STEP-RR | | | |
| FC17-51-PK0A<br>A (FC17-51-PK0B) | 1 | | | | -9208 |
| PZ | | PZ BRILLIANT BLACK | | | |
| SQ | | SQ BLAZE RED | | | |
| UC | | UC CRYSTAL WHITE | | | |
| WY | | WY NOBLE WHITE | | | |
| 1F | | 1F WINNING SILVER M. | | | |
| 3G | | 3G<br>SHADOW SILVER METALL | | | |
| 5D | | 5D HARBOR BLUE M. | | | |
| 6H | | 6H<br>MELLOW BURGUNDY MC | | | |
| FC17-51-PK0B | 1 | (TURBO) | | | 9208- |
| PZ | | PZ BRILLIANT BLACK | | | |
| SQ | | SQ BLAZE RED | | | |
| UC | | UC CRYSTAL WHITE | | | |
| WY | | WY NOBLE WHITE | | | |
| 1F | | 1F WINNING SILVER M. | | | |
| 3G | | 3G<br>SHADOW SILVER METALL | | | |
| 5D | | 5D HARBOR BLUE M. | | | |
| 6H | | 6H<br>MELLOW BURGUNDY MC | | | |
| 51-PL0A | | MOULD(L),STEP-RR | | | |
| FC17-51-PR0A<br>A (FC17-51-PR0B) | 1 | | | | -9208 |
| PZ | | PZ BRILLIANT BLACK | | | |
| SQ | | SQ BLAZE RED | | | |
| UC | | UC CRYSTAL WHITE | | | |
| WY | | WY NOBLE WHITE | | | |
| 1F | | 1F WINNING SILVER M. | | | |
| 3G | | 3G<br>SHADOW SILVER METALL | | | |
| 5D | | 5D HARBOR BLUE M. | | | |
| 6H | | 6H<br>MELLOW BURGUNDY MC | | | |
| FC17-51-PR0B | 1 | (TURBO) | | | 9208- |

9208 FC3####-702731



3 N 3

| LO.NO | SEC.NO | SECTION NAME |
|---|---|---|
| 3-C03 | 0900 | KEY SETS |
| 3-F03 | 5000 | FRONT BUMPER |
| 3-H03 | 5010 | REAR BUMPER |
| 3-J03 | 5020 | HEAD LAMP CLEANER |
| 3-L03 | 5030 | WINDOW MOULDINGS |
| 3-M03 | 5040 | BODY MOULDINGS (COUPE) |
| 3-E04 | 5060 | SIDE PROTECTORS |
| 3-I04 | 5100 | HEAD LAMPS |
| 3-J04 | 5103 | HEAD LAMP RETRACTORS |
| 3-N04 | 5105 | FRONT COMBINATION LAMPS |
| 3-G05 | 5110 | REAR COMBINATION LAMPS |
| 3-K05 | 5120 | LICENSE LAMPS |
| 3-M05 | 5125 | INTERIOR LAMPS |
| 3-N05 | 5130 | OVERHEAD CONSOLE |
| 3-C06 | 5170 | ORNAMENTS |
| 3-D06 | 5180 | COWL & EXTRACTOR GRILLES |
| 3-G06 | 5230 | BONNET |
| 3-J06 | 5260 | TRUNK LID (CONVERTIBLE) |
| 3-L06 | 5310 | BODY PANELS (FRONT) (COUPE) |
| 3-C07 | 5310 A | BODY PANELS (FRONT) (CONVERTIBLE) |
| 3-F07 | 5320 | BODY PANELS (FENDER & WHEEL APRON) |
| 3-K07 | 5330 | BODY PANELS (DASH & COWL PANEL) |
| 3-L07 | 5340 | BODY PANELS (SIDE) (COUPE) |
| 3-E08 | 5340A | BODY PANELS (SIDE) (CONVERTIBLE) |
| 3-K08 | 5360 | BODY PANELS (ROOF) (W/O SUN ROOF) |
| 3-L08 | 5360 A | BODY PANELS (ROOF) (SUN ROOF) |
| 3-M08 | 5370 | BODY PANELS (FLOOR) (COUPE) |
| 3-D09 | 5370 A | BODY PANELS (FLOOR) (CONVERTIBLE) |
| 3-H09 | 5380 | FLOOR ATTACHMENTS (HOLE COVERS) |
| 3-J09 | 5390 | FLOOR ATTACHMENTS |
| 3-C10 | 5500 | DASHBOARD EQUIPMENTS |
| 3-F10 | 5520 | METER HOOD |
| 3-G10 | 5530 | SPEEDOMETER CABLE |
| 3-H10 | 5540 | METER COMPONENTS |
| 3-J10 | 5560 | DASHBOARD & RELATED PARTS |
| 3-E11 | 5570 | CONSOLE |
| 3-H11 | 5580 | VENTILATOR |
| 3-J11 | 5700 | FRONT SEATS (COUPE) |
| 3-[illegible]13 | 5700A | FRONT SEATS (CONVERTIBLE) |
| 3-K[illegible] | [illegible]750 | REAR SEATS (COUPE) |
| 3-M13 | 5790 | SEAT BELTS (COUPE) |
| 3-C14 | 5790A | SEAT BELTS (CONVERTIBLE) |
| 3-D14 | 5800 | FRONT DOORS (COUPE) |
| 3-G14 | 5800A | FRONT DOORS (CONVERTIBLE) |
| 3-K14 | 5830 | FRONT DOOR MECHANISMS (COUPE) |
| 3-F15 | 5830A | FRONT DOOR MECHANISMS (CONVERTIBLE) |
| 3-J15 | 5840 | FRONT DOOR TRIMS & RELATED PARTS (COUPE) |
| 3-H16 | 5840A | FRONT DOOR TRIMS & RELATED PARTS (CONVERTIBLE) |

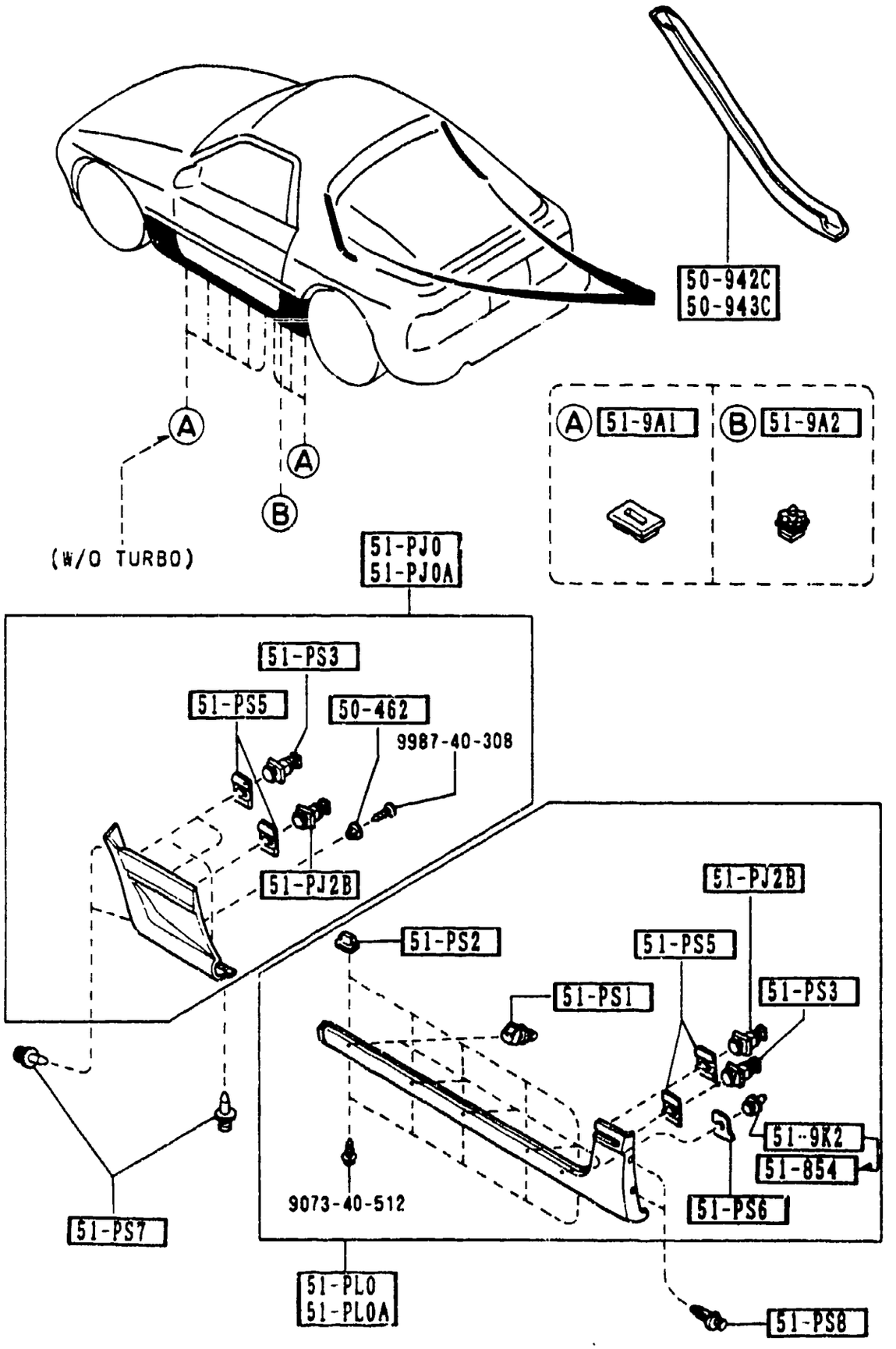




| PART NO. | QTY | MODEL/RESTRICTION | MODEL/RESTRICTION | MODEL/RESTRICTION | FROM-TO |
|---|---|---|---|---|---|
| CONT'D | | | | | |
| PZ | | PZ BRILLIANT BLACK | | | |
| SQ | | SQ BLAZE RED | | | |
| UC | | UC CRYSTAL WHITE | | | |
| WY | | WY NOBLE WHITE | | | |
| 1F | | 1F WINNING SILVER M. | | | |
| 3G | | 3G SHADOW SILVER METALL | | | |
| 5D | | 5D HARBOR BLUE M. | | | |
| 6H | | 6H MELLOW BURGUNDY MC | | | |
| 51-PS1 | | CLIP | | | |
| FC17-51-PS1A | 10 | (TURBO) | | | |
| 51-PS2 | | SCREW,GROMMET | | | |
| FC17-51-PS2 | 10 | (TURBO) | | | |
| 51-PS3 | | CLIP | | | |
| FC17-51-PS3 | 6 | (TURBO) | | | |
| 51-PS5 | | BRACKET,NO.2 | | | |
| FC17-51-PS5 | 10 | (TURBO) | | | |
| 51-PS6 | | BRACKET,NO.2 | | | |
| FC17-51-PS6 | 2 | (FOR RIGHT & LEFT) (TURBO) | | | -9208 |
| FC17-51-PS6 | 1 | (FOR RIGHT) (TURBO) | | | 9208- |
| FC18-51-PS6 | 1 | (FOR LEFT) (TURBO) | | | 9208- |
| 51-PS7 | | RIVET | | | |
| FC17-51-PS7 | 6 | (TURBO) | | | |
| PZ | | PZ BRILLIANT BLACK | | | |
| SQ | | SQ BLAZE RED | | | |
| UC | | UC CRYSTAL WHITE | | | |
| WY | | WY NOBLE WHITE | | | |
| 1F | | 1F WINNING SILVER M. | | | |
| 3G | | 3G SHADOW SILVER METALL | | | |

9208 FC3###-702731

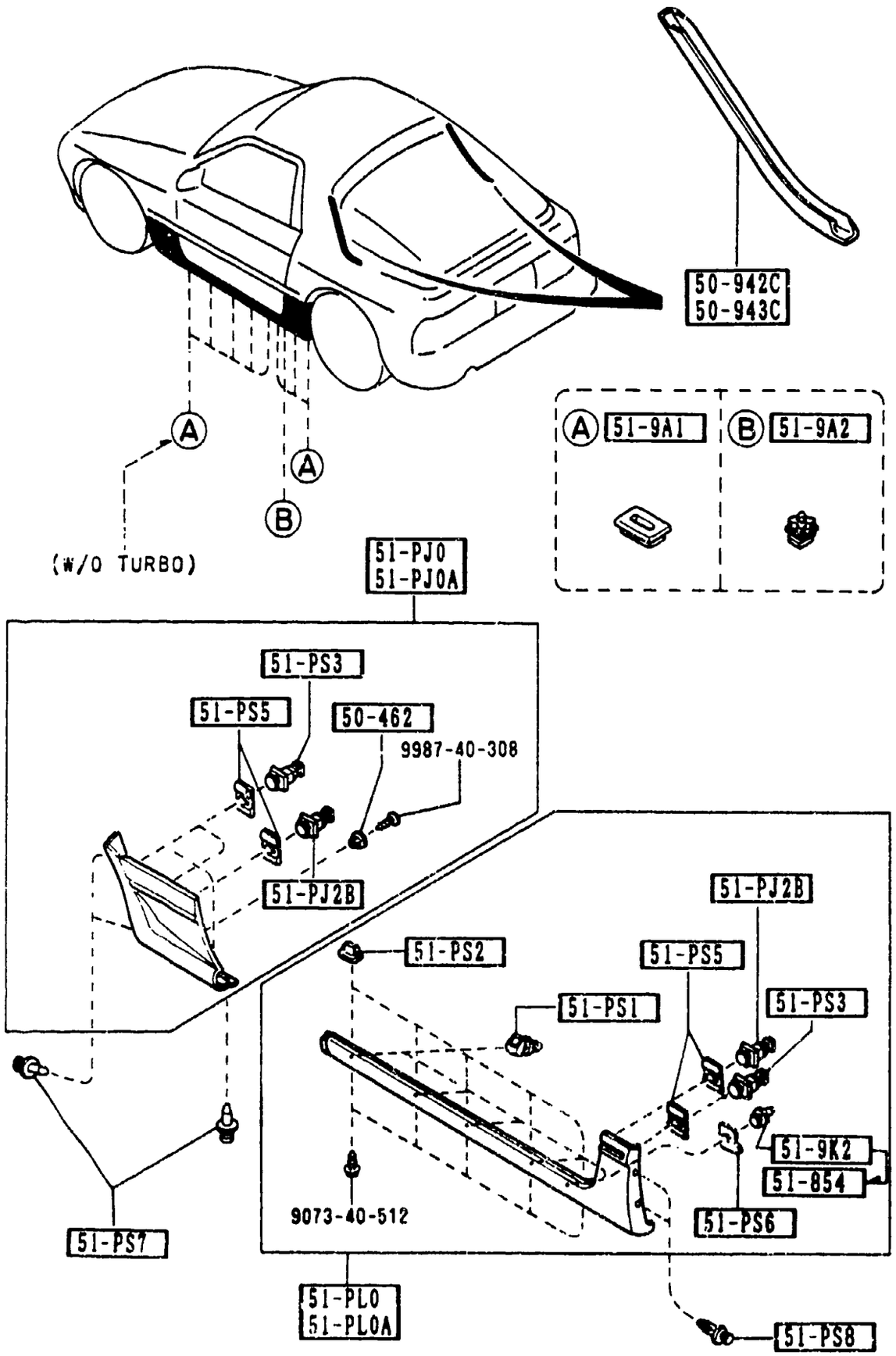


| PART NO. | QTY | MODEL/RESTRICTION | MODEL/RESTRICTION | MODEL/RESTRICTION | FROM-TO |
|---|---|---|---|---|---|
| CONT'D | | | | | |
| 5D | | 5D HARBOR BLUE M. | | | |
| 6H | | 6H MELLOW BURGUNDY MC | | | |
| 51-PS8 | | RIVET | | | |
| FC17-51-PS8 | 4 | (TURBO) | | | |
| PZ | | PZ BRILLIANT BLACK | | | |
| SQ | | SQ BLAZE RED | | | |
| UC | | UC CRYSTAL WHITE | | | |
| WY | | WY NOBLE WHITE | | | |
| 1F | | 1F WINNING SILVER M. | | | |
| 3G | | 3G SHADOW SILVER METALL | | | |
| 5D | | 5D HARBOR BLUE M. | | | |
| 6H | | 6H MELLOW BURGUNDY MC | | | |
| 51-854 | | FASTENER | | | |
| B129-51-993 | 2 | (TURBO) | | | 9208- |
| 51-9A1 | | PLUG'A',BLIND-S.SPOILER | | | |
| FB03-51-9A1 | 6 | (TURBO) | | | |
| | 16 | (W/O TURBO) | | | |
| 51-9A2 | | PLUG'B',BLIND-S.SPOILER | | | |
| FB03-51-9A2 | 2 | | | | |
| 51-9K2 | | FASTENER,AIR DAM-SKIRT | | | |
| FB01-51-9K2 | 2 | (TURBO) | | | -9208 |

9208 FC3####-702731

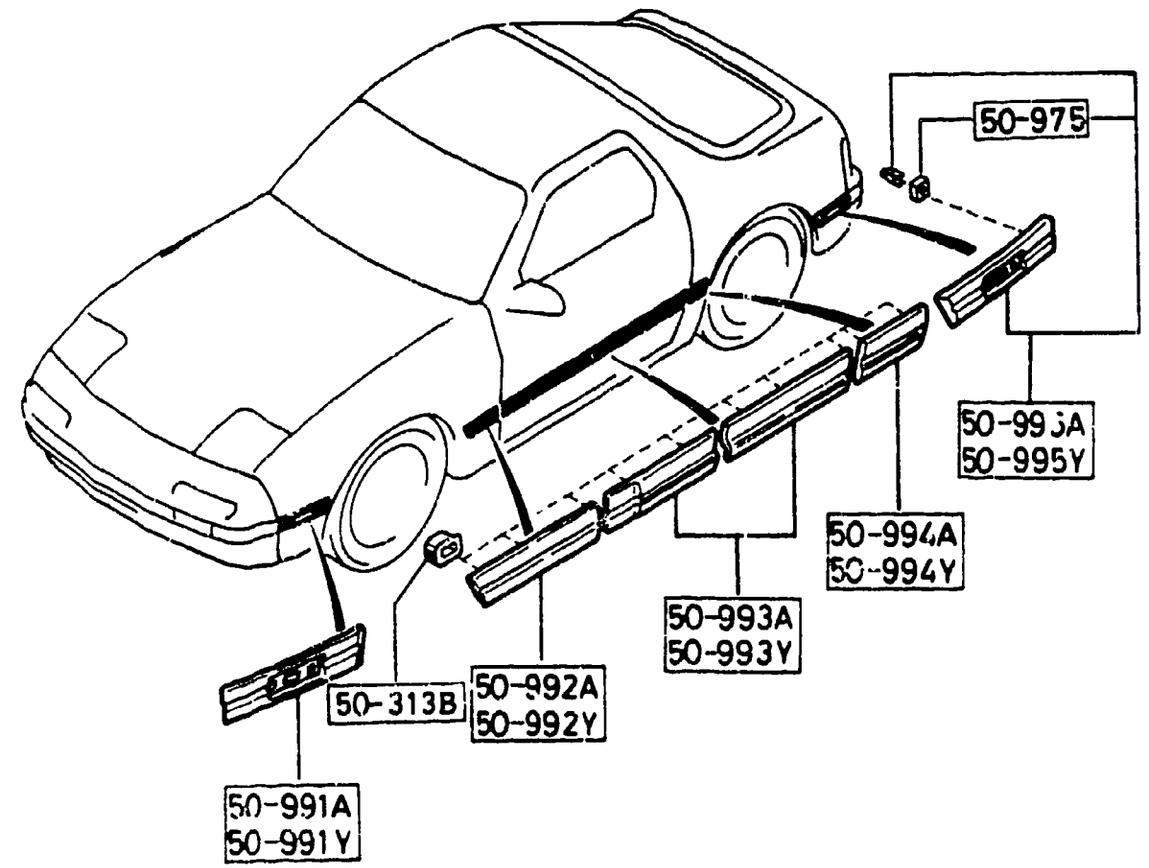


## 5060 -1 SIDE PROTECTORS

| PART NO. | QTY | MODEL/RESTRICTION | MODEL/RESTRICTION | MODEL/RESTRICTION | FROM-TO |
|---|---|---|---|---|---|
| 50-313B | | GROMMET,PROTECTOR | | | |
| H115-50-313A | 20 | | | | |
| 50-975 | | GASKET | | | |
| FB01-50-945 | 2 | | | | |
| 50-991A | | PROTECTOR'A'(R),SIDE | | | |
| FC01-50-6R0A | 1 | | | | |
| PZ | | PZ BRILLIANT BLACK | | | |
| SQ | | SQ BLAZE RED | | | |
| UC | | UC CRYSTAL WHITE | | | |
| WY | | WY NOBLE WHITE | | | |
| 1F | | 1F WINNING SILVER M. | | | |
| 3G | | 3G SHADOW SILVER METALL | | | |
| 5D | | 5D HARBOR BLUE M. | | | |
| 6H | | 6H MELLOW BURGUNDY MC | | | |
| 50-991Y | | PROTECTOR'A'(L),SIDE | | | |
| FC01-50-6S0A | 1 | | | | |
| PZ | | PZ BRILLIANT BLACK | | | |
| SQ | | SQ BLAZE RED | | | |
| UC | | UC CRYSTAL WHITE | | | |
| WY | | WY NOBLE WHITE | | | |
| 1F | | 1F WINNING SILVER M. | | | |
| 3G | | 3G SHADOW SILVER METALL | | | |
| 5D | | 5D HARBOR BLUE M. | | | |
| 6H | | 6H MELLOW BURGUNDY MC | | | |
| 50-992A | | PROTECTOR'B'(R),SIDE | | | |
| FC01-50-681A | 1 | (W/O TURBO) | | | |
| PZ | | PZ BRILLIANT BLACK | | | |
| SQ | | SQ BLAZE RED | | | |
| UC | | UC CRYSTAL WHITE | | | |
| WY | | WY NOBLE WHITE | | | |

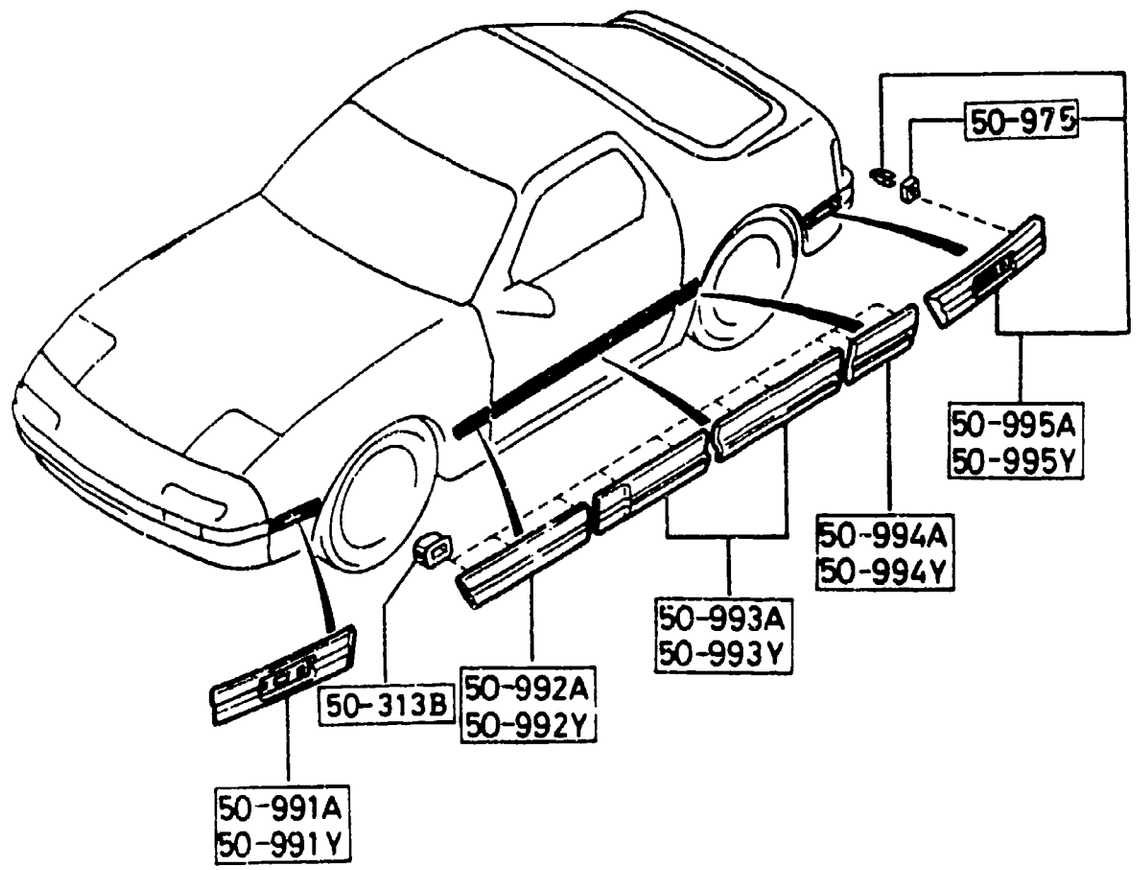




| PART NO. | QTY | MODEL/RESTRICTION | MODEL/RESTRICTION | MODEL/RESTRICTION | FROM-TO |
|---|---|---|---|---|---|
| CONT'D | | | | | |
| 1F | | 1F WINNING SILVER M. | | | |
| 3G | | 3G SHADOW SILVER METALL | | | |
| 5D | | 5D HARBOR BLUE M. | | | |
| 6H | | 6H MELLOW BURGUNDY MC | | | |
| +---------+ | | | | | |
| \| 50-992Y \| | | PROTECTOR'B'(L),SIDE | | | |
| +---------+ | | | | | |
| FC01-50-691A | 1 | (W/O TURBO) | | | |
| PZ | | PZ BRILLIANT BLACK | | | |
| SQ | | SQ BLAZE RED | | | |
| UC | | UC CRYSTAL WHITE | | | |
| WY | | WY NOBLE WHITE | | | |
| 1F | | 1F WINNING SILVER M. | | | |
| 3G | | 3G SHADOW SILVER METALL | | | |
| 5D | | 5D HARBOR BLUE M. | | | |
| 6H | | 6H MELLOW BURGUNDY MC | | | |
| +---------+ | | | | | |
| \| 50-993A \| | | PROTECTOR'C'(R),SIDE | | | |
| +---------+ | | | | | |
| FC01-50-682 | 1 | | | | |
| PZ | | PZ BRILLIANT BLACK | | | |
| SQ | | SQ BLAZE RED | | | |
| UC | | UC CRYSTAL WHITE | | | |
| WY | | WY NOBLE WHITE | | | |
| 1F | | 1F WINNING SILVER M. | | | |
| 3G | | 3G SHADOW SILVER METALL | | | |
| 5D | | 5D HARBOR BLUE M. | | | |
| 6H | | 6H MELLOW BURGUNDY MC | | | |
| +---------+ | | | | | |
| \| 50-993Y \| | | PROTECTOR'C'(L),SIDE | | | |
| +---------+ | | | | | |
| FC01-50-692 | 1 | | | | |
| PZ | | PZ BRILLIANT BLACK | | | |
| SQ | | SQ BLAZE RED | | | |
| UC | | UC CRYSTAL WHITE | | | |
| WY | | WY NOBLE WHITE | | | |

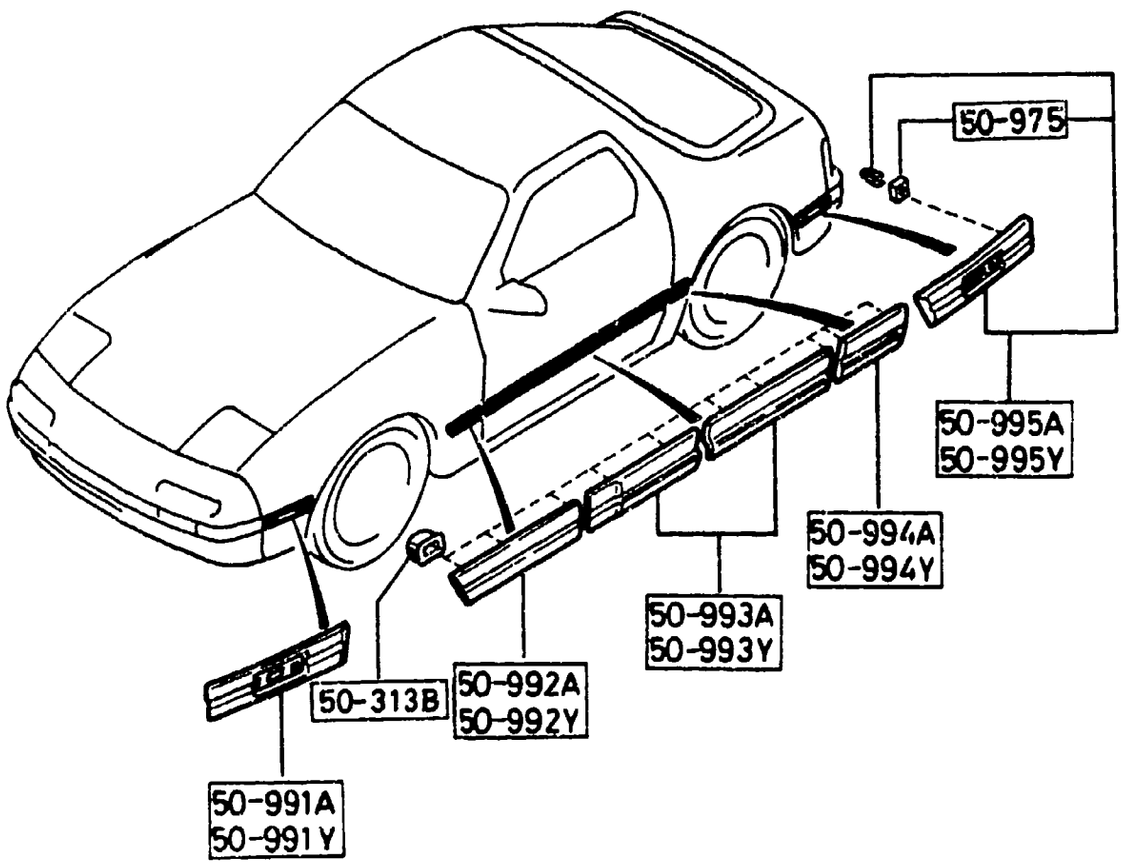


| PART NO. | QTY | MODEL/RESTRICTION | MODEL/RESTRICTION | MODEL/RESTRICTION | FROM-TO |
|---|---|---|---|---|---|
| CONT'D | | | | | |
| 1F | | 1F WINNING SILVER M. | | | |
| 3G | | 3G SHADOW SILVER METALL | | | |
| 5D | | 5D HARBOR BLUE M. | | | |
| 6H | | 6H MELLOW BURGUNDY MC | | | |
| 50-994A | | PROTECTOR'D'(R),SIDE | | | |
| FC01-50-683A | 1 | (W/O TURBO) | | | |
| PZ | | PZ BRILLIANT BLACK | | | |
| SQ | | SQ BLAZE RED | | | |
| UC | | UC CRYSTAL WHITE | | | |
| WY | | WY NOBLE WHITE | | | |
| 1F | | 1F WINNING SILVER M. | | | |
| 3G | | 3G SHADOW SILVER METALL | | | |
| 5D | | 5D HARBOR BLUE M. | | | |
| 6H | | 6H MELLOW BURGUNDY MC | | | |
| 50-994Y | | PROTECTOR'D'(L),SIDE | | | |
| FC01-50-693A | 1 | (W/O TURBO) | | | |
| PZ | | PZ BRILLIANT BLACK | | | |
| SQ | | SQ BLAZE RED | | | |
| UC | | UC CRYSTAL WHITE | | | |
| WY | | WY NOBLE WHITE | | | |
| 1F | | 1F WINNING SILVER M. | | | |
| 3G | | 3G SHADOW SILVER METALL | | | |
| 5D | | 5D HARBOR BLUE M. | | | |
| 6H | | 6H MELLOW BURGUNDY MC | | | |
| 50-995A | | PROTECTOR'E'(R),SIDE | | | |
| FC01-50-6V0A | 1 | | | | |
| PZ | | PZ BRILLIANT BLACK | | | |
| SQ | | SQ BLAZE RED | | | |
| UC | | UC CRYSTAL WHITE | | | |

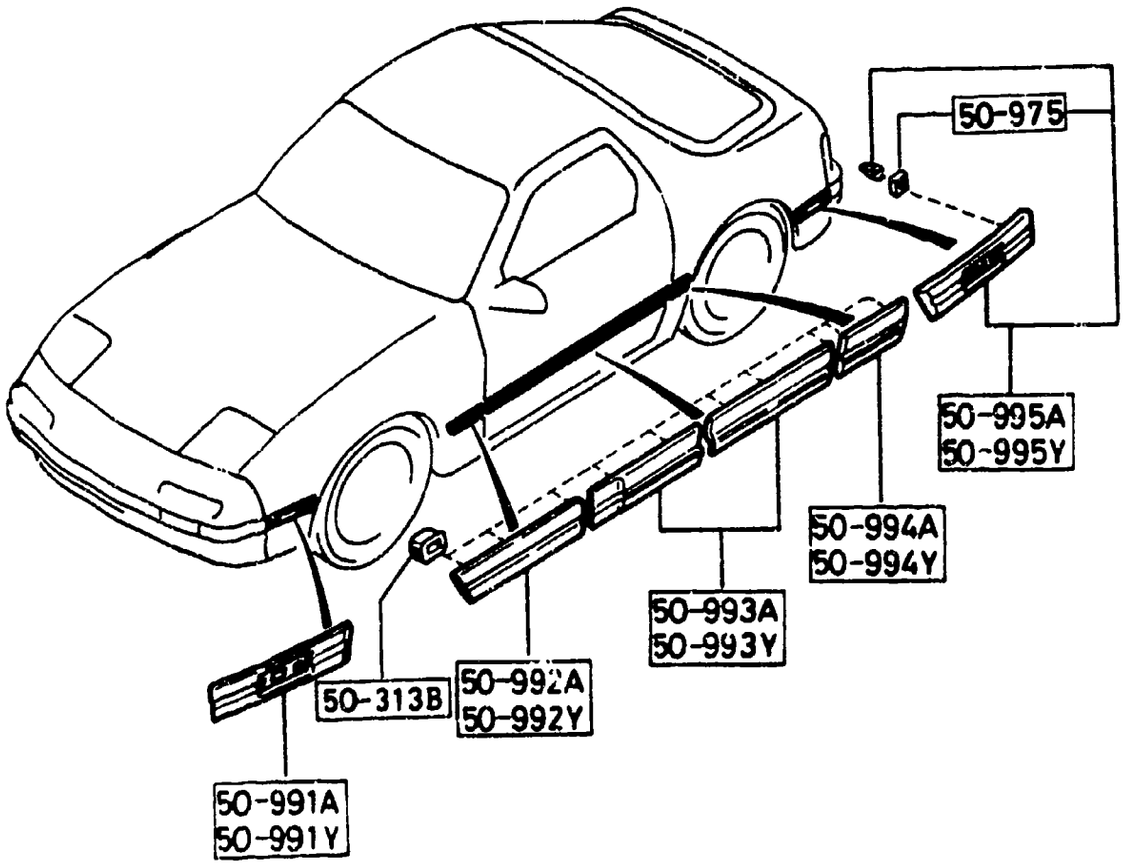




| PART NO. | QTY | MODEL/RESTRICTION | MODEL/RESTRICTION | MODEL/RESTRICTION | FROM-TO |
|---|---|---|---|---|---|
| CONT'D | | | | | |
| WY | | WY NOBLE WHITE | | | |
| 1F | | 1F WINNING SILVER M. | | | |
| 3G | | 3G SHADOW SILVER METALL | | | |
| 5D | | 5D HARBOR BLUE M. | | | |
| 6H | | 6H MELLOW BURGUNDY MC | | | |
| +----------+ | | | | | |
| \| 50-995Y \| | | PROTECTOR'E'(L),SIDE | | | |
| +----------+ | | | | | |
| FC01-50-6W0A | 1 | | | | |
| PZ | | PZ BRILLIANT BLACK | | | |
| SQ | | SQ BLAZE RED | | | |
| UC | | UC CRYSTAL WHITE | | | |
| WY | | WY NOBLE WHITE | | | |
| 1F | | 1F WINNING SILVER M. | | | |
| 3G | | 3G SHADOW SILVER METALL | | | |
| 5D | | 5D HARBOR BLUE M. | | | |
| 6H | | 6H MELLOW BURGUNDY MC | | | |

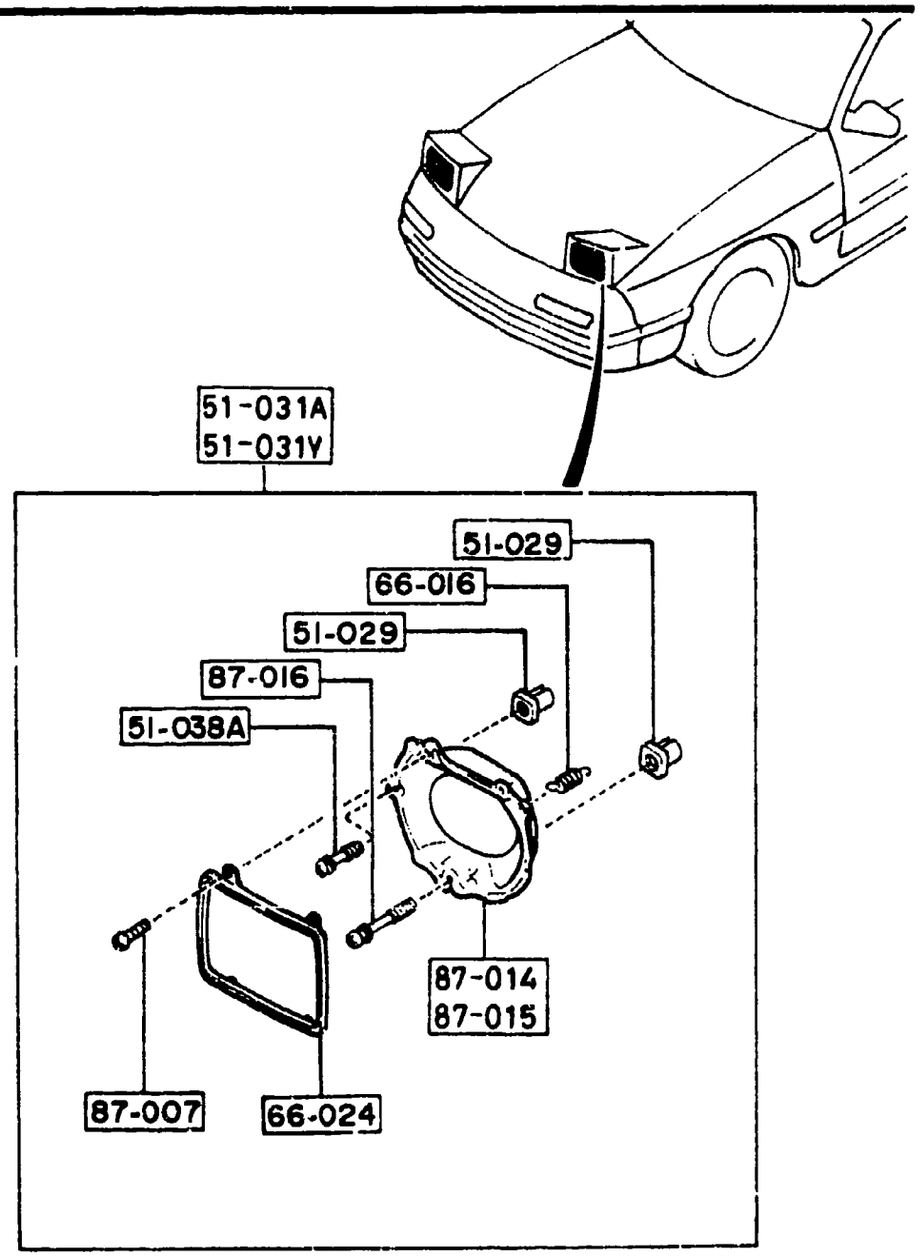


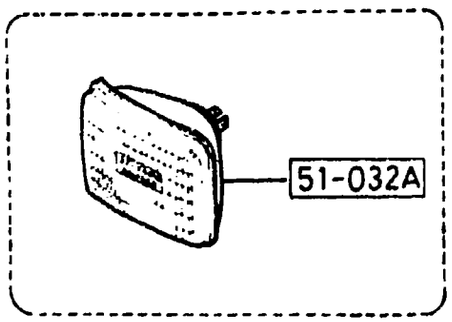


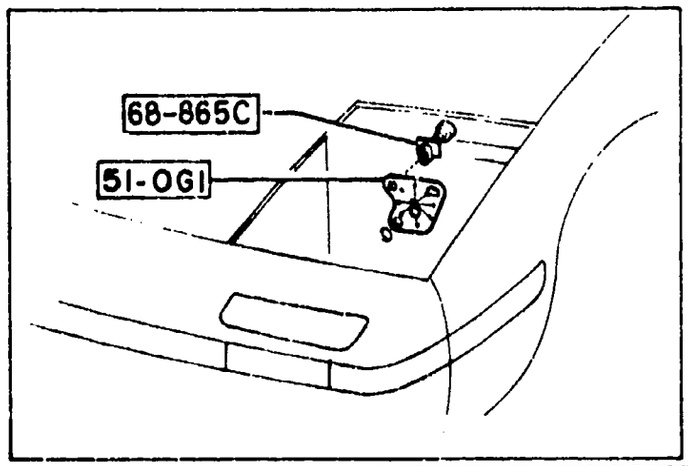


| PART NO. | QTY | MODEL/RESTRICTION | MODEL/RESTRICTION | MODEL/RESTRICTION | FROM-TO |
|---|---|---|---|---|---|
| 51-0G1 | | COVER,SEAL-SHROUD | | | |
| FB01-51-0G1 | 2 | | | | |
| 51-029 | | GROMMET,SCREW | | | |
| 0483-66-061A | 4 | | | | |
| 51-031A | | LAMP SUB SET(R),HEAD | | | |
| 8BF1-51-032 | 1 | | | | |
| 51-031Y | | LAMP SUB SET(L),HEAD | | | |
| 8BF1-51-042 | 1 | | | | |
| 51-032A | | UNIT,HEAD LAMP | | | |
| FB06-51-031 | 2 | GTE-SYLVANIA | | | |
| 51-038A | | SCREW,ADJUST | | | |
| FB01-51-047 | 2 | | | | |
| 66-016 | | SPRING,ADJUST | | | |
| FB01-51-036 | 2 | | | | -9317 |
| FC42-51-036 | 2 | | | | 9317- |
| 66-024 | | RING,RETAINING | | | |
| BA03-51-033 | 2 | | | | |
| 68-865C | | FASTENER | | | |
| B006-68-865 | 6 | | | | |
| 87-007 | | SCREW | | | |
| 8239-51-035 | 8 | | | | |
| 87-014 | | RING(R)MOUNTING | | | |
| FB01-51-032 | 1 | | | | |
| 87-015 | | RING(L)MOUNTING | | | |
| FB01-51-042 | 1 | | | | |
| 87-016 | | SCREW,ADJUST | | | |
| FB01-51-037 | 2 | | | | |

9317 FC3####-704944

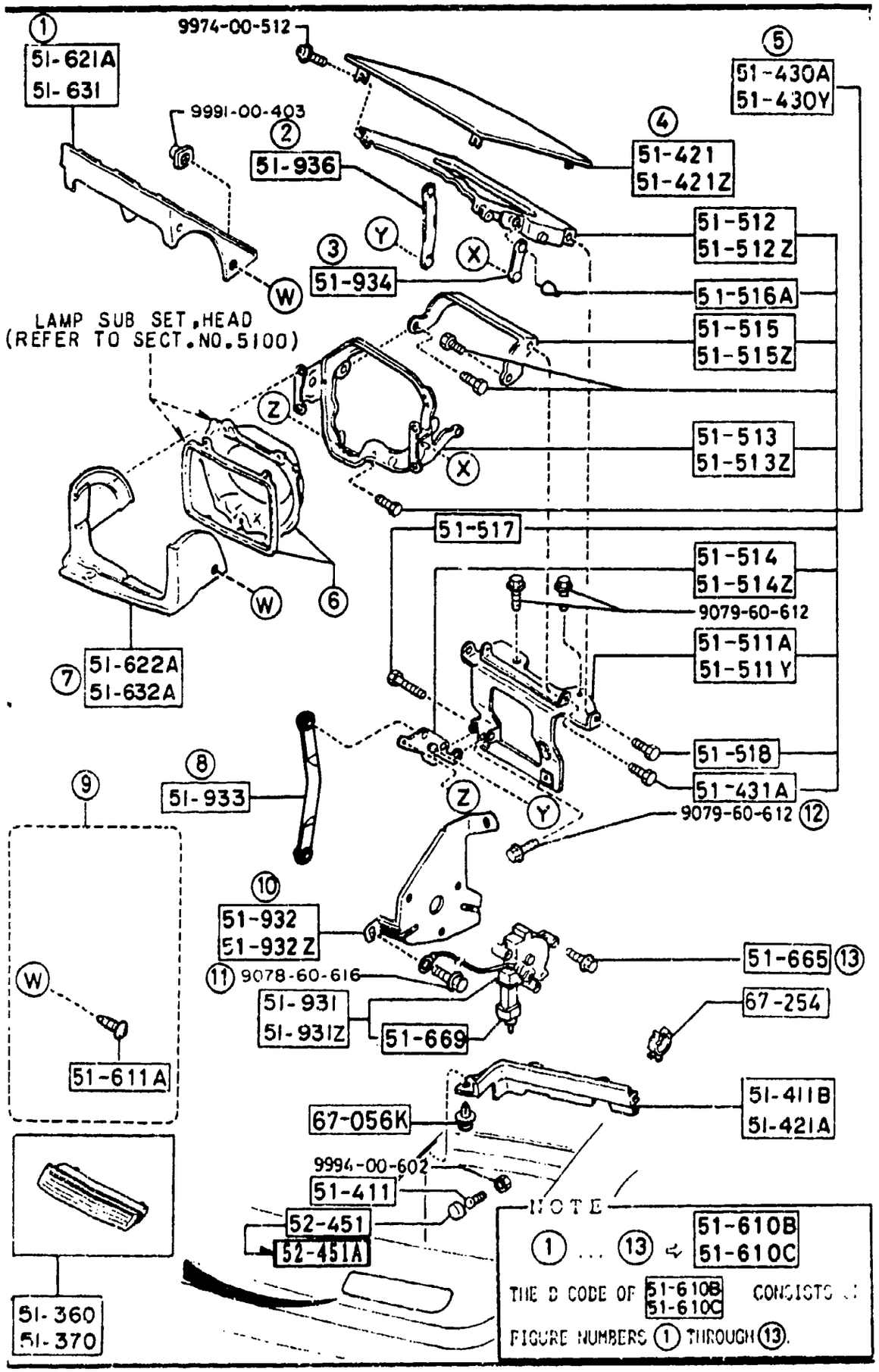


AUFA02

5103 -1 HEAD LAMP RETRACTORS

| PART NO. | QTY | MODEL/RESTRICTION | MODEL/RESTRICTION | MODEL/RESTRICTION | FROM-TO |
|---|---|---|---|---|---|
| 51-360 | | COVER(R),PASSING HOLE | | | |
| FB01-51-360B | 1 | | | | |
| 51-370 | | COVER(L),PASSING HOLE | | | |
| FB01-51-370B | 1 | | | | |
| 51-411 | | SCREW,STOPPER | | | |
| 8871-51-411 | 2 | | | | |
| 51-411B | | PROTECTOR(R),RETRACTABLE | | | |
| FB01-51-411A | 1 | | | | |
| 51-421 | | LID(R),LAMP | | | |
| FB01-51-623 | 1 | | | | |
| 51-421A | | PROTECTOR(L),RETRACTABLE | | | |
| FB01-51-421A | 1 | | | | |
| 51-421Z | | LID(L),LAMP | | | |
| FB01-51-633 | 1 | | | | |
| 51-430A | | HINGE(R),LID-LAMP | | | |
| FB01-51-510E | 1 | | | | -9101 |
| FB01-51-510F | 1 | | | | 9101- |
| 51-430Y | | HINGE(L),LID-LAMP | | | |
| FB01-51-520E | 1 | | | | -9101 |
| FB01-51-520F | 1 | | | | 9101- |
| 51-431A | | BOLT,HINGE | | | |
| H001-51-511 | 10 | | | | |
| 51-511A | | BRACKET(R),HINGE-LAMP LID | | | |
| FB01-51-511A | 1 | | | | |
| 51-511Y | | BRACKET(L),HINGE-LAMP LID | | | |
| FB01-51-521A | 1 | | | | |
| 51-512 | | FRAME(R),LAMP LID | | | |
| FB01-51-512 | 1 | | | | |

9101 FC3####-700067

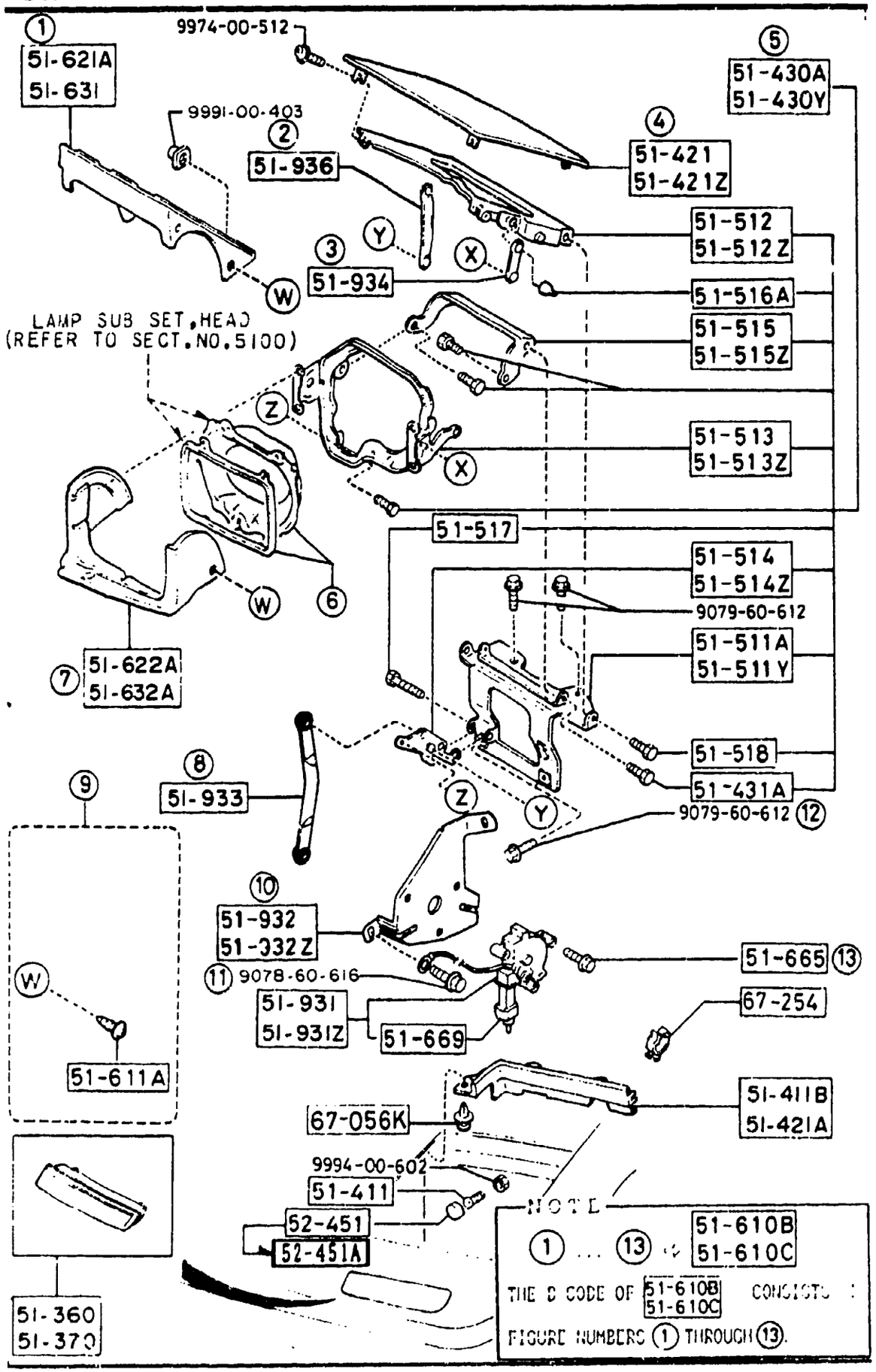


AUFA02



| PART NO. | QTY | MODEL/RESTRICTION | MODEL/RESTRICTION | MODEL/RESTRICTION | FROM-TO |
|---|---|---|---|---|---|
| 51-512Z | | FRAME(L),LAMP LID | | | |
| FB01-51-522 | 1 | | | | |
| 51-513 | | HOUSING(R),LAMP-LID HINGE | | | |
| FB01-51-513D | 1 | | | | |
| 51-513Z | | HOUSING(L),LAMP-LID HINGE | | | |
| FB01-51-523D | 1 | | | | |
| 51-514 | | ARM(R),LOWER-LID HINGE | | | |
| FB01-51-514 | 1 | | | | -9101 |
| FB01-51-514A | 1 | | | | 9101- |
| 51-514Z | | ARM(L),LOWER-LID HINGE | | | |
| FB01-51-524 | 1 | | | | -9101 |
| FB01-51-524A | 1 | | | | 9101- |
| 51-515 | | ARM(R),UPPER-LID HINGE | | | |
| FB01-51-515 | 1 | | | | |
| 51-515Z | | ARM(L),UPPER-LID HINGE | | | |
| FB01-51-525 | 1 | | | | |
| 51-516A | | CAP,HINGE-H.L.RETRACTABLE | | | |
| FB01-51-516 | 10 | | | | |
| 51-517 | | BOLT,HINGE-H.L.RETRACTABL | | | |
| FB01-51-517 | 2 | | | | |
| 51-518 | | BOLT,HINGE-H.L.RETRACTABL | | | |
| FB01-51-518 | 4 | | | | |
| 51-610B | | RETRACTOR SET(R),HEAD L. | | | |
| 8AF2-51-610 | 1 | USA, (W/O H.L.CLEANER) | | | |
| 8AF3-51-610 | 1 | NON USA, | | | |
| 51-610C | | RETRACTOR SET(L),HEAD L. | | | |
| 8AF2-51-650 | 1 | USA, (W/O H.L.CLEANER) | | | |
| 8AF3-51-650 | 1 | NON USA, | | | |

9101 FC3***-700067

CAT. AUFA02-06

1992-05

## 5103 HEAD LAMP RETRACTORS

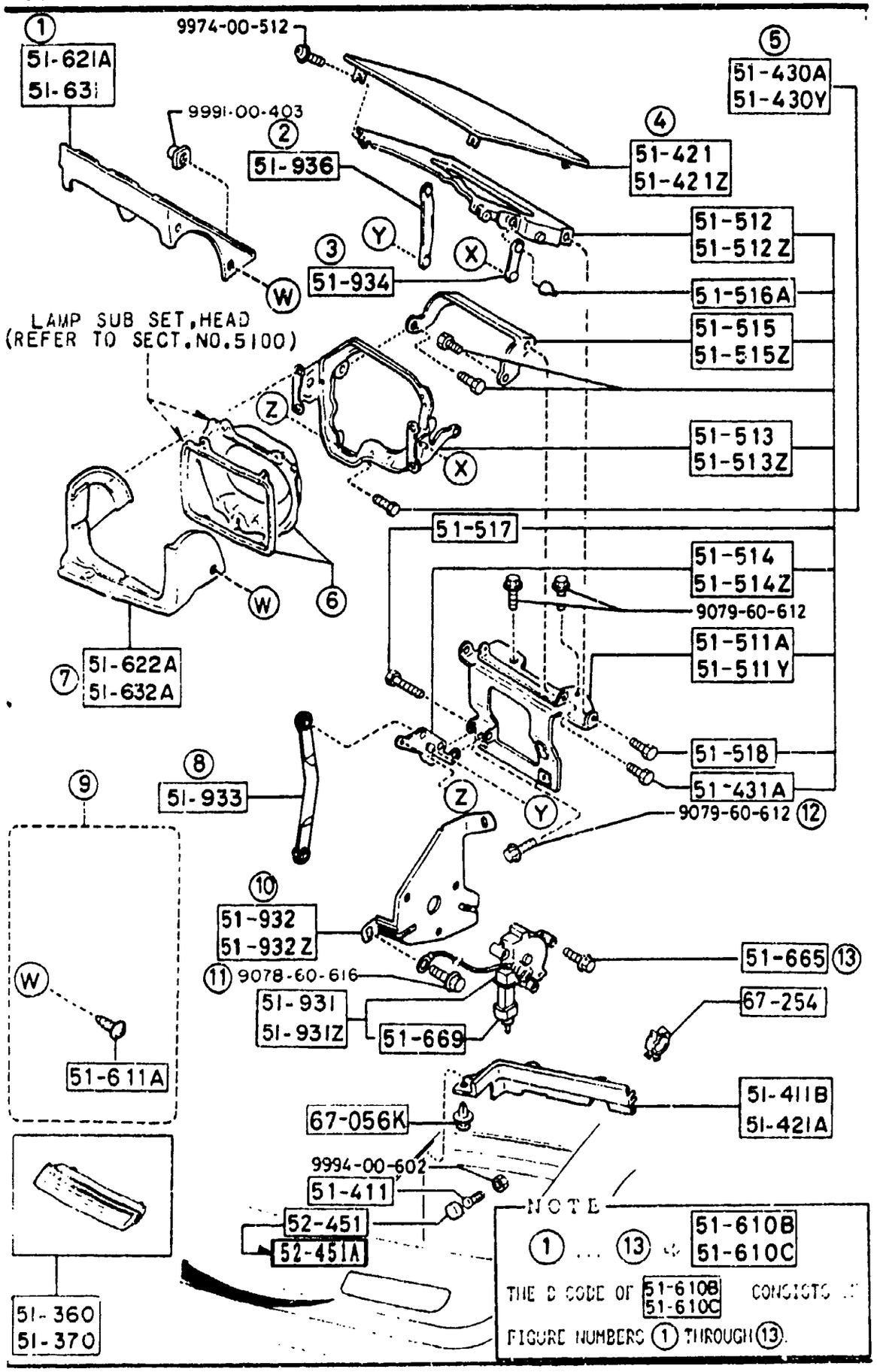


AUFA02

| PART NO. | QTY | MODEL/RESTRICTION | MODEL/RESTRICTION | MODEL/RESTRICTION | FROM-TO |
|---|---|---|---|---|---|
| 51-611A<br>FB01-51-611 | 12 | SCREW,HEAD LAMP BEZEL | | | |
| 51-621A<br>FB01-51-621A | 1 | BEZEL(R),HEAD LAMP-UPPER | | | |
| 51-622A<br>FB01-51-622A | 1 | BEZEL(R),HEAD LAMP-LOWER<br>USA,<br>(W/O H.L.CLEANER) | | | |
| FB02-51-622A | 1 | NON USA, | | | |
| 51-631<br>FB01-51-631A | 1 | BEZEL(L),HEAD LAMP-UPPER | | | |
| 51-632A<br>FB01-51-632A | 1 | BEZEL(L),HEAD LAMP-LOWER<br>USA,<br>(W/O H.L.CLEANER) | | | |
| FB02-51-632A | 1 | NON USA, | | | |
| 51-665<br>FB01-51-665 | 6 | BOLT,MOTOR-RETRACT H/LAMP | | | |
| 51-669<br>FB01-51-669 | 2 | BOOTS,MOTOR-RETRACT H/L | | | |
| 51-931<br>FB01-51-66X | 1 | MOTOR(R) | | | |
| 51-931Z<br>FB01-51-67X | 1 | MOTOR(L) | | | |
| 51-932<br>FB01-51-662A | 1 | BRACKET(R) | | | |
| 51-932Z<br>FB01-51-672A | 1 | BRACKET(L) | | | |
| 51-933<br>FB01-51-664A | 2 | ROD,MOTOR | | | |
| 51-934 | | ROD'A' | | | |

CAT. AUFA02-06

1992-05

## 5103 HEAD LAMP RETRACTORS

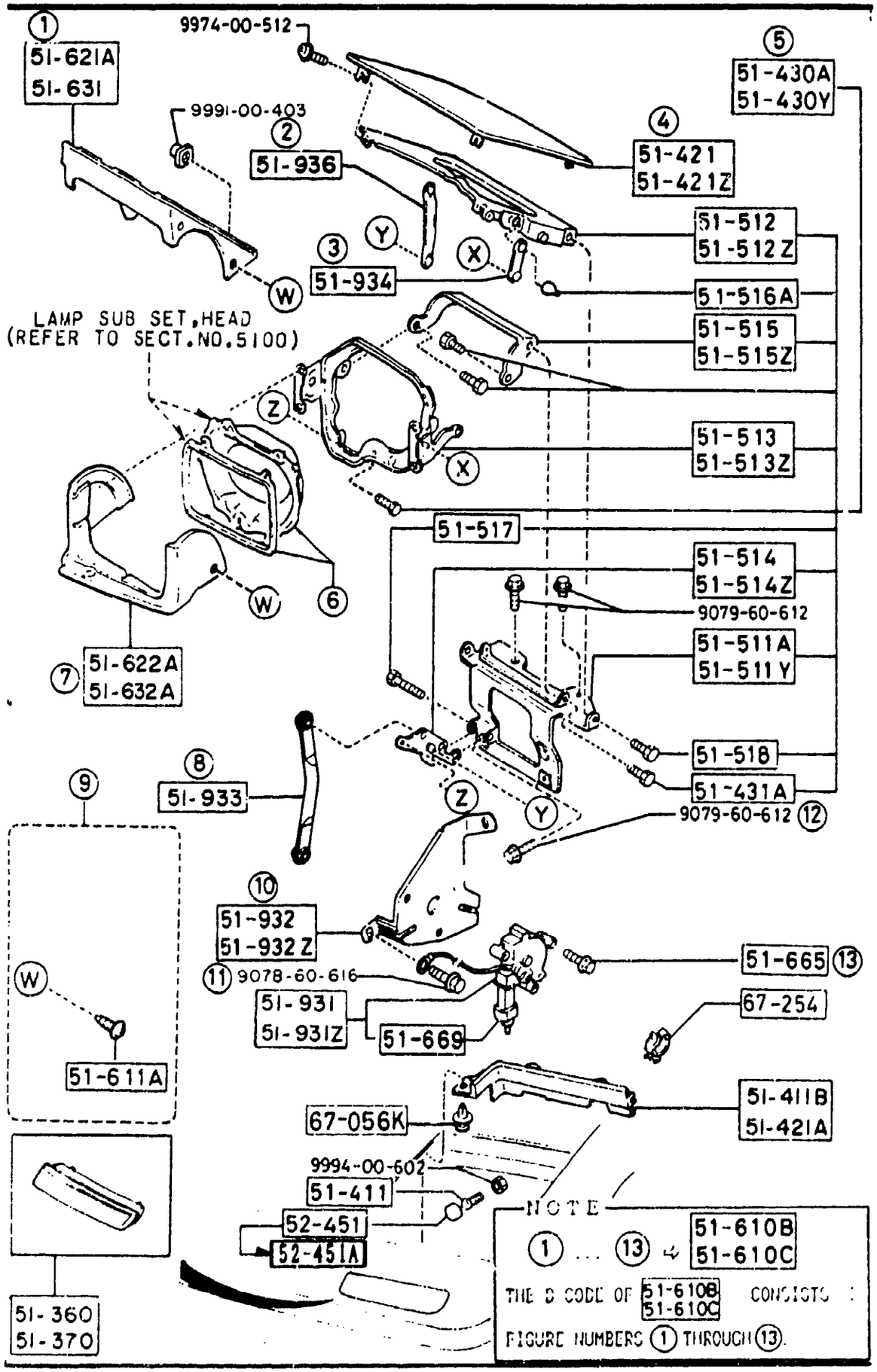


NOTE

① ... ⑬ ⇨ 51-610B, 51-610C

THE D CODE OF 51-610B, 51-610C CONSISTS OF FIGURE NUMBERS ① THROUGH ⑬.

| PART NO. | QTY | MODEL/RESTRICTION | MODEL/RESTRICTION | MODEL/RESTRICTION | FROM-TO |
|---|---|---|---|---|---|
| CONT'D | | | | | |
| FB01-51-651A | 2 | | | | |
| 51-936 | | ROD'B' | | | |
| FB01-51-652A | 2 | | | | |
| 52-451 | | CUSHION | | | |
| 0866-52-451 | 2 | | | | -9101 |
| 52-451A | | RUBBER,CUSHION | | | |
| H001-51-513 | 2 | | | | 9101- |
| 67-056K | | RIVET | | | |
| UB39-50-795 | 6 | | | | |
| 67-254 | | CLIP,CABLE | | | |
| S113-67-254A | 2 | | | | -9120 |
| FC04-51-674 | 2 | | | | 9120- |

9101 FC3***-700067
9120 FC3***-700643

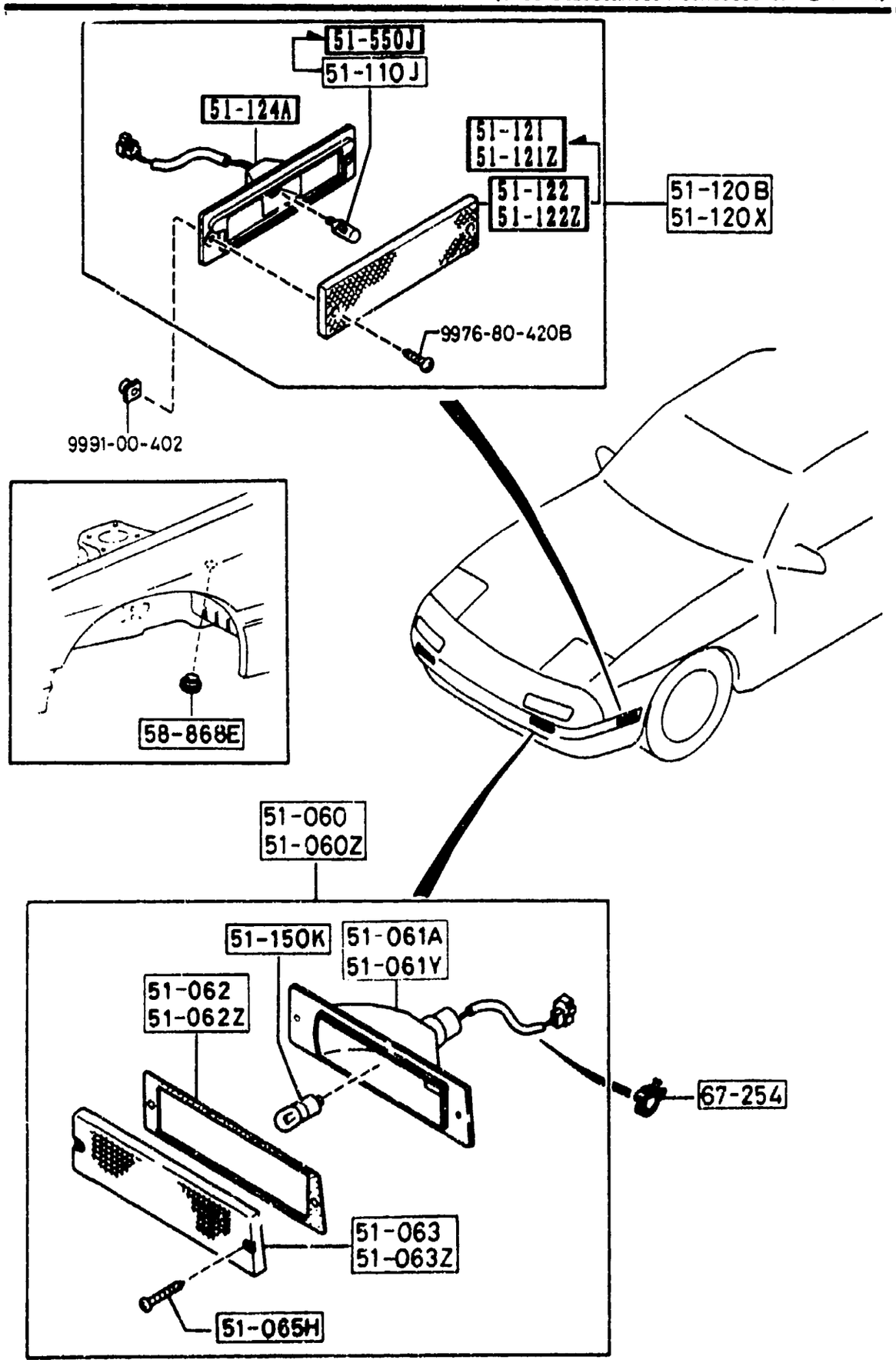
51-550J
51-110J
51-124A
51-121
51-121Z
51-122
51-122Z
51-120B
51-120X
9976-80-420B
9991-00-402
58-868E
51-060
51-060Z
51-150K
51-061A
51-061Y
51-062
51-062Z
67-254
51-063
51-063Z
51-065H





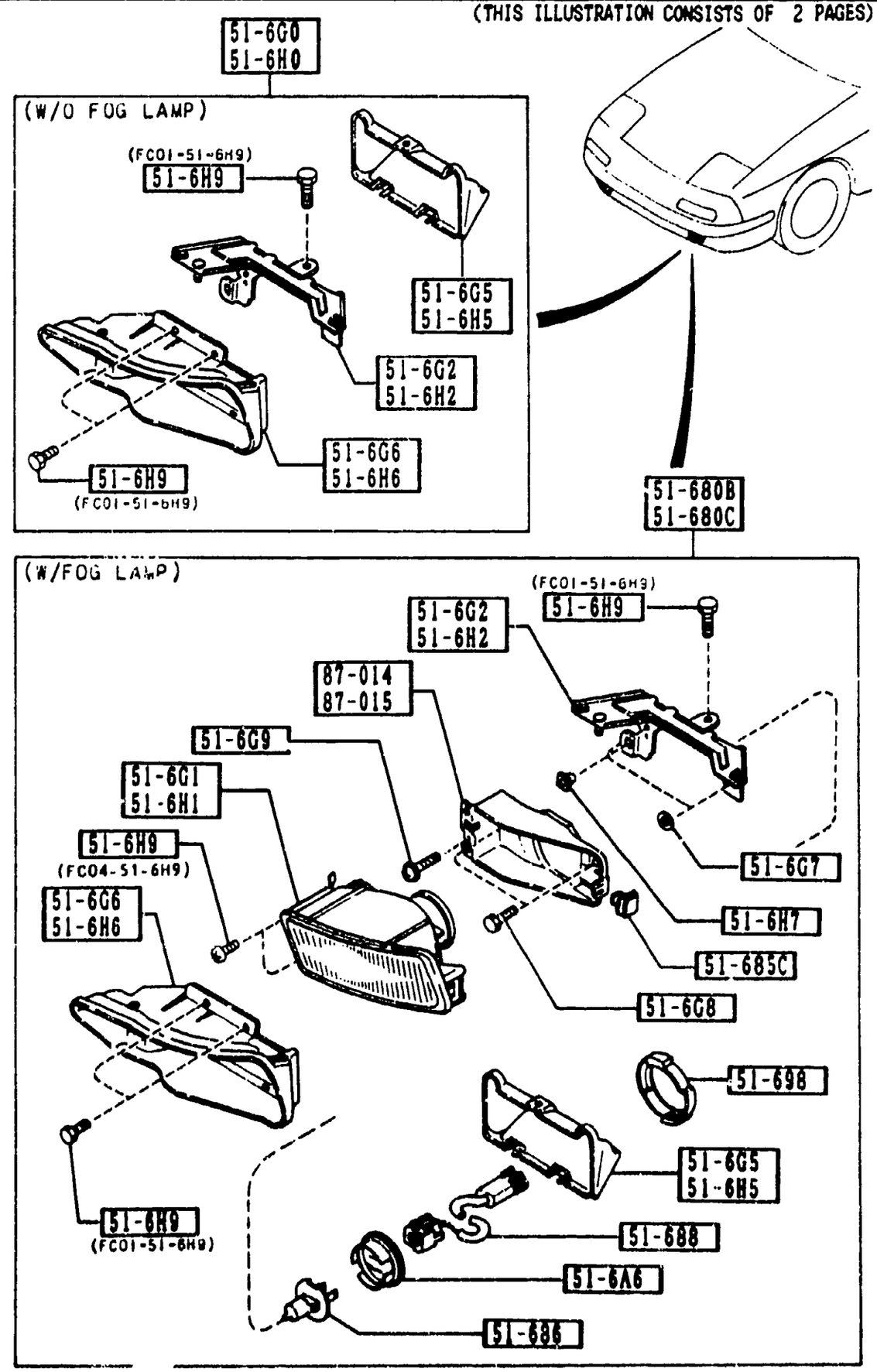
51-6G0
51-6H0
(W/O FOG LAMP)
(FC01-51-6H9)
51-6H9
51-6G5
51-6H5
51-6G2
51-6H2
51-6G6
51-6H6
51-6H9
(FC01-51-6H9)
51-680B
51-680C
(W/FOG LAMP)
(FC01-51-6H9)
51-6H9
51-6G2
51-6H2
87-014
87-015
51-6G9
51-6G1
51-6H1
51-6H9
(FC04-51-6H9)
51-6G6
51-6H6
51-6G7
51-6H7
51-685C
51-6G8
51-698
51-6G5
51-6H5
51-688
51-6A6
51-686
51-6H9
(FC01-51-6H9)

SECTION NAME INDEX (BODY)1/2

| LO.NO | SEC.NO | SECTION NAME |
|---|---|---|
| 3-C03 | 0900 | KEY SETS |
| 3-F03 | 5000 | FRONT BUMPER |
| 3-H03 | 5010 | REAR BUMPER |
| 3-J03 | 5020 | HEAD LAMP CLEANER |
| 3-L03 | 5030 | WINDOW MOULDINGS |
| 3-M03 | 5040 | BODY MOULDINGS (COUPE) |
| 3-E04 | 5060 | SIDE PROTECTORS |
| 3-I04 | 5100 | HEAD LAMPS |
| 3-J04 | 5103 | HEAD LAMP RETRACTORS |
| 3-N04 | 5105 | FRONT COMBINATION LAMPS |
| 3-G05 | 5110 | REAR COMBINATION LAMPS |
| 3-K05 | 5120 | LICENSE LAMPS |
| 3-M05 | 5125 | INTERIOR LAMPS |
| 3-N05 | 5130 | OVERHEAD CONSOLE |
| 3-C06 | 5170 | ORNAMENTS |
| 3-D06 | 5180 | COWL & EXTRACTOR GRILLES |
| 3-G06 | 5230 | BONNET |
| 3-J06 | 5260 | TRUNK LID (CONVERTIBLE) |
| 3-L06 | 5310 | BODY PANELS (FRONT) (COUPE) |
| 3-C07 | 5310 A | BODY PANELS (FRONT) (CONVERTIBLE) |
| 3-F07 | 5320 | BODY PANELS (FENDER & WHEEL APRON) |
| 3-K07 | 5330 | BODY PANELS (DASH & COWL PANEL) |
| 3-L07 | 5340 | BODY PANELS (SIDE) (COUPE) |
| 3-E08 | 5340A | BODY PANELS (SIDE) (CONVERTIBLE) |
| 3-K08 | 5360 | BODY PANELS (ROOF) (W/O SUN ROOF) |
| 3-L08 | 5360 A | BODY PANELS (ROOF) (SUN ROOF) |
| 3-M08 | 5370 | BODY PANELS (FLOOR) (COUPE) |
| 3-D09 | 5370 A | BODY PANELS (FLOOR) (CONVERTIBLE) |
| 3-H09 | 5380 | FLOOR ATTACHMENTS (HOLE COVERS) |
| 3-J09 | 5390 | FLOOR ATTACHMENTS |
| 3-C10 | 5500 | DASHBOARD EQUIPMENTS |
| 3-F10 | 5520 | METER HOOD |
| 3-G10 | 5530 | SPEEDOMETER CABLE |
| 3-H10 | 5540 | METER COMPONENTS |
| 3-J10 | 5560 | DASHBOARD & RELATED PARTS |
| 3-E11 | 5570 | CONSOLE |
| 3-H11 | 5580 | VENTILATOR |
| 3-J11 | 5700 | FRONT SEATS (COUPE) |
| 3-E13 | 5700A | FRONT SEATS (CONVERTIBLE) |
| 3-K13 | 5750 | REAR SEATS (COUPE) |
| 3-M13 | 5790 | SEAT BELTS (COUPE) |
| [illegible] | 5790A | SEAT BELTS (CONVERTIBLE) |
| 3-D[illegible] | 5800 | FRONT DOORS (COUPE) |
| 3-G14 | 5800A | FRONT DOORS (CONVERTIBLE) |
| 3-K14 | 5830 | FRONT DOOR MECHANISMS (COUPE) |
| 3-F15 | 5830A | FRONT DOOR MECHANISMS (CONVERTIBLE) |
| 3-J15 | 5840 | FRONT DOOR TRIMS & RELATED PARTS (COUPE) |
| 3-H16 | 5840A | FRONT DOOR TRIMS & RELATED PARTS (CONVERTIBLE) |

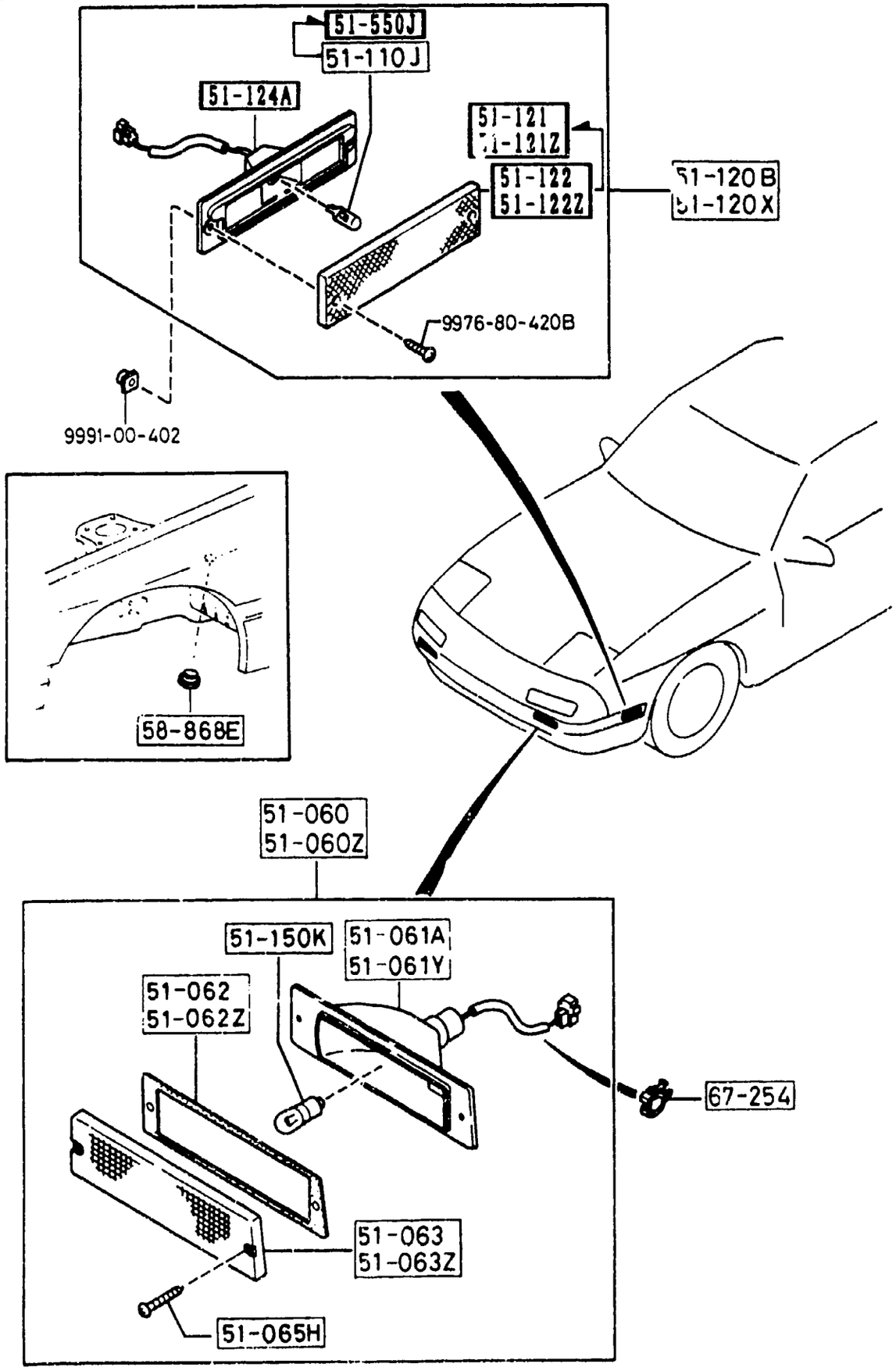


5105 -1 FRONT COMBINATION LAMPS

| PART NO. | QTY | MODEL/RESTRICTION | MODEL/RESTRICTION | MODEL/RESTRICTION | FROM-TO |
|---|---|---|---|---|---|
| 51-060 | | LAMP SET(R),FRT COMB | | | |
| 8BF4-51-060 | 1 | | | | |
| 51-060Z | | LAMP SET(L),FRT COMB | | | |
| 8BF4-51-070 | 1 | | | | |
| 51-061A | | HOUSING(R),F.COMB. | | | |
| FC01-51-062 | 1 | | | | |
| 51-061Y | | HOUSING(L),F.COMB. | | | |
| FC01-51-072 | 1 | | | | |
| 51-062 | | GASKET(R),F.COMB. | | | |
| FC01-51-066 | 1 | | | | |
| 51-062Z | | GASKET(L),F.COMB. | | | |
| FC01-51-076 | 1 | | | | |
| 51-063 | | LENS(R),FRT COMB. | | | |
| FC01-51-061 | 1 | | | | |
| 51-063Z | | LENS(L),FRT COMB. | | | |
| FC01-51-071 | 1 | | | | |
| 51-065H | | SCREW,TAPPING | | | |
| FC01-51-065 | 4 | | | | |
| 51-110J | | BULB | | | |
| 99701-6038 | 2 | 12V 3.8W | | | -9701 |
| 51-120B | | LAMP SET(R),SIDE TUR | | | |
| 8BF1-51-120 | 1 | | | | -9701 |
| 8BF5-51-120 | 1 | | | | 9701- |
| 51-120X | | LAMP SET(L),SIDE TUR | | | |
| 8BF1-51-130 | 1 | | | | -9701 |
| 8BF5-51-130 | 1 | | | | 9701- |
| 51-121 | | LENS & BODY(R) | | | |
| FC01-51-5E1 | 1 | | | | 9701- |

9701 FC3***-709151

(THIS ILLUSTRATION CONSISTS OF 2 PAGES)

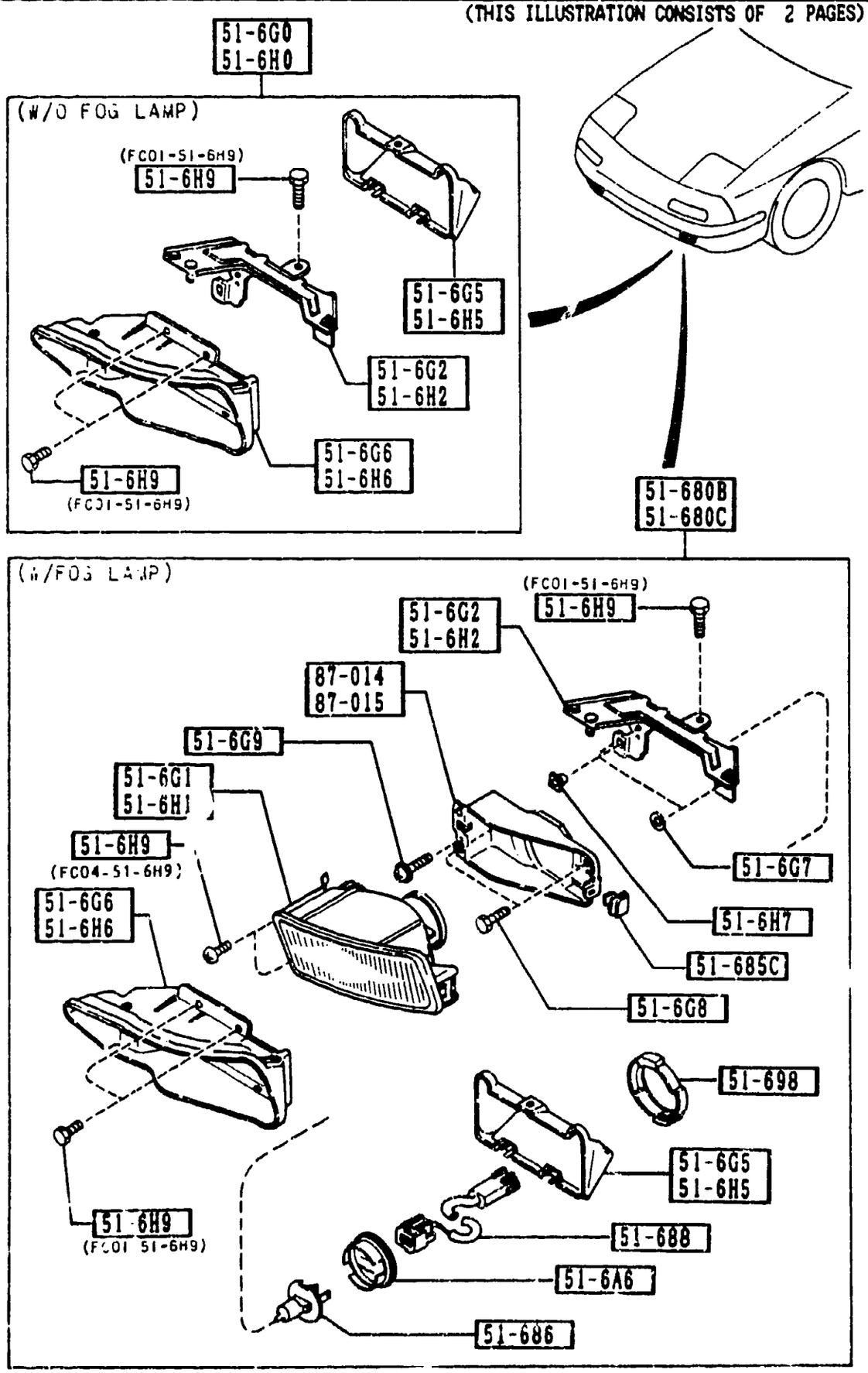






| PART NO. | QTY | MODEL/RESTRICTION | MODEL/RESTRICTION | MODEL/RESTRICTION | FROM-TO |
|---|---|---|---|---|---|
| 51-121Z | | LENS & BODY(L) | | | |
| FC01-51-5F1 | 1 | | | | 9701- |
| 51-122 | | LENS(R),SIDE TURN | | | |
| FB01-51-123 | 1 | | | | -9701 |
| 51-122Z | | LENS(L),SIDE TURN | | | |
| FB01-51-133 | 1 | | | | -9701 |
| 51-124A | | SOCKET,SIDE TURN | | | |
| FC01-51-5E2 | 2 | | | | 9701- |
| 51-150K | | BULB | | | |
| 99701-4276Y | 2 | A12V 27/8W | | | |
| 51-550J | | BULB | | | |
| 99701-6040 | 2 | 12V 3.8W | | | 9701- |
| 51-6A6 | | COVER,SOCKET-F.FOG LAMP | | | |
| FC04-51-6G4 | 2 | GXL, TURBO, CONV, (W/FOG LAMP) | | | |
| 51-6G0 | | DUCT(R),AIR | | | |
| FC01-51-6G0A | 1 | GTU, GTUS, (W/O FOG LAMP) | | | |
| 51-6G1 | | UNIT(R),FOG LAMP | | | |
| FC04-51-6G1 | 1 | GXL, TURBO, CONV, (W/FOG LAMP) | | | |
| 51-6G2 | | HIUSING(R),FOG LAMP | | | |
| FC01-51-6G2 | 1 | GTU, GTUS, (W/O FOG LAMP) | | | |
| FC04-51-6G2 | 1 | GXL, TURBO, CONV, (W/FOG LAMP) | | | |
| 51-6G5 | | DUCT(R),'B' AIR | | | |
| FC04-51-6G5 | 1 | | | | |
| 51-6G6 | | DUCT(R),'A' AIR | | | |
| FC04-51-6G6A | 1 | | | | |

9701 FC3####-709151

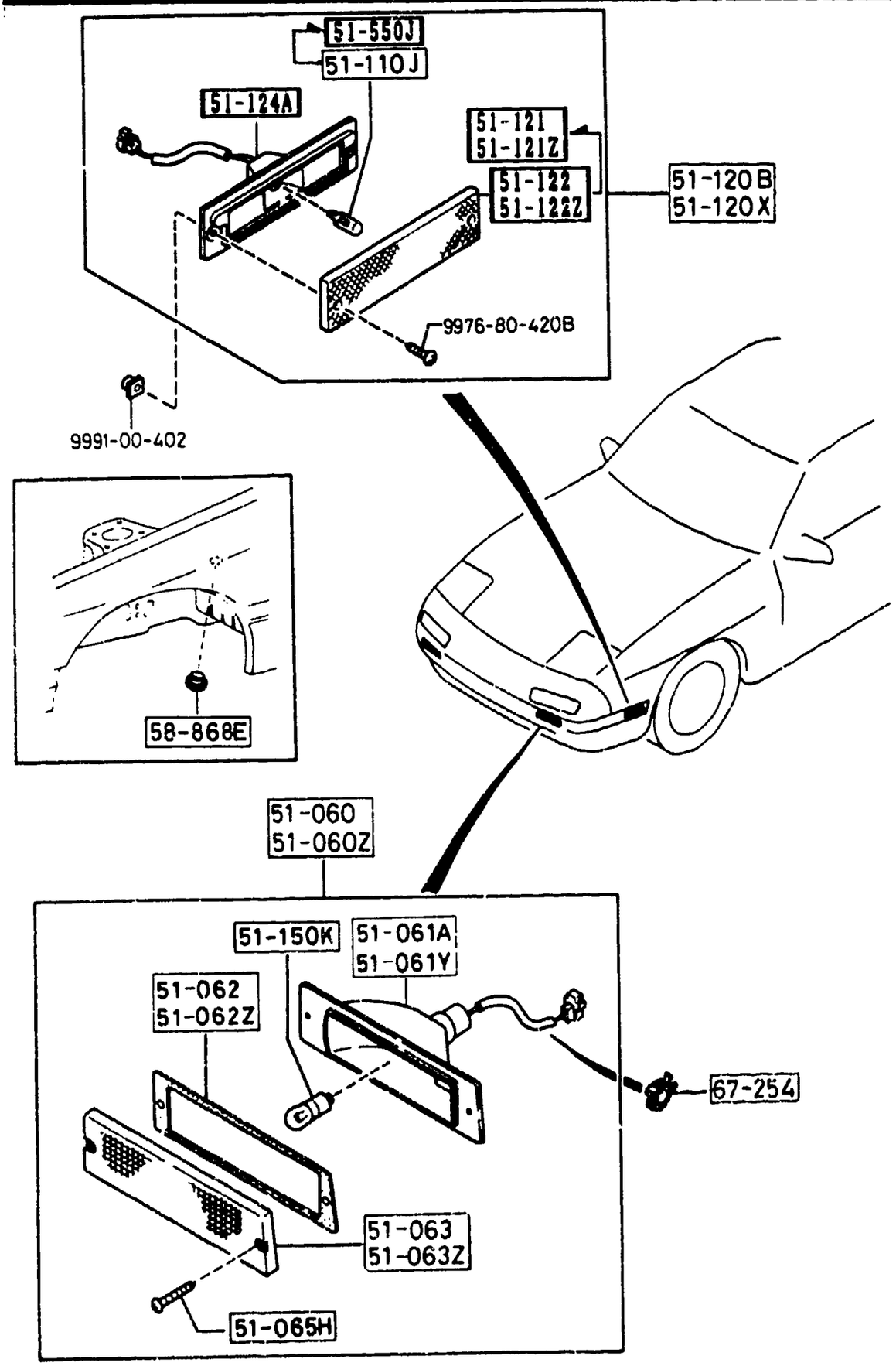




5105 -3 FRONT COMBINATION LAMPS

| PART NO. | QTY | MODEL/RESTRICTION | MODEL/RESTRICTION | MODEL/RESTRICTION | FROM-TO |
|---|---|---|---|---|---|
| 51-6G7 | | RUBBER,MOUNT | | | |
| FC04-51-6G7 | 4 | GXL, TURBO, CONV, (W/FOG LAMP) | | | |
| 51-6G8 | | BOLT,SPECIAL | | | |
| FC04-51-6G8 | 4 | GXL, TURBO, CONV, (W/FOG LAMP) | | | |
| 51-6G9 | | SCREW,ADJUST | | | |
| FC04-51-6G9 | 2 | GXL, TURBO, CONV, (W/FOG LAMP) | | | |
| 51-6H0 | | DUCT(L),AIR | | | |
| FC01-51-6H0A | 1 | GTU, GTUS, (W/O FOG LAMP) | | | |
| 51-6H1 | | UNIT(L),FOG LAMP | | | |
| FC04-51-6H1 | 1 | GXL, TURBO, CONV, (W/FOG LAMP) | | | |
| 51-6H2 | | HOUSING(L),FOG LAMP | | | |
| FC01-51-6H2 | 1 | GTU, GTUS, (W/O FOG LAMP) | | | |
| FC04-51-6H2 | 1 | GXL, TURBO, CONV, (W/FOG LAMP) | | | |
| 51-6H5 | | DUCT(L),AIR | | | |
| FC04-51-6H5 | 1 | | | | |
| 51-6H6 | | DUCT(L),'A' AIR | | | |
| FC04-51-6H6A | 1 | | | | |
| 51-6H7 | | SCREW,GROMMET | | | |
| FC04-51-6H7 | 2 | GXL, TURBO, CONV, (W/FOG LAMP) | | | |
| 51-6H9 | | SCREW SET | | | |
| FC01-51-6H9 | 6 | | | | |
| FC04-51-6H9 | 4 | GXL, TURBO, CONV, (W/FOG LAMP) | | | |
| 51-680B | | LAMP(R),F.FOG | | | |
| FC04-51-680A | 1 | GXL, TURBO, CONV, (W/FOG LAMP) | | | |

## 5105 FRONT COMBINATION LAMPS (2/2)

(THIS ILLUSTRATION CONSISTS OF 2 PAGES)

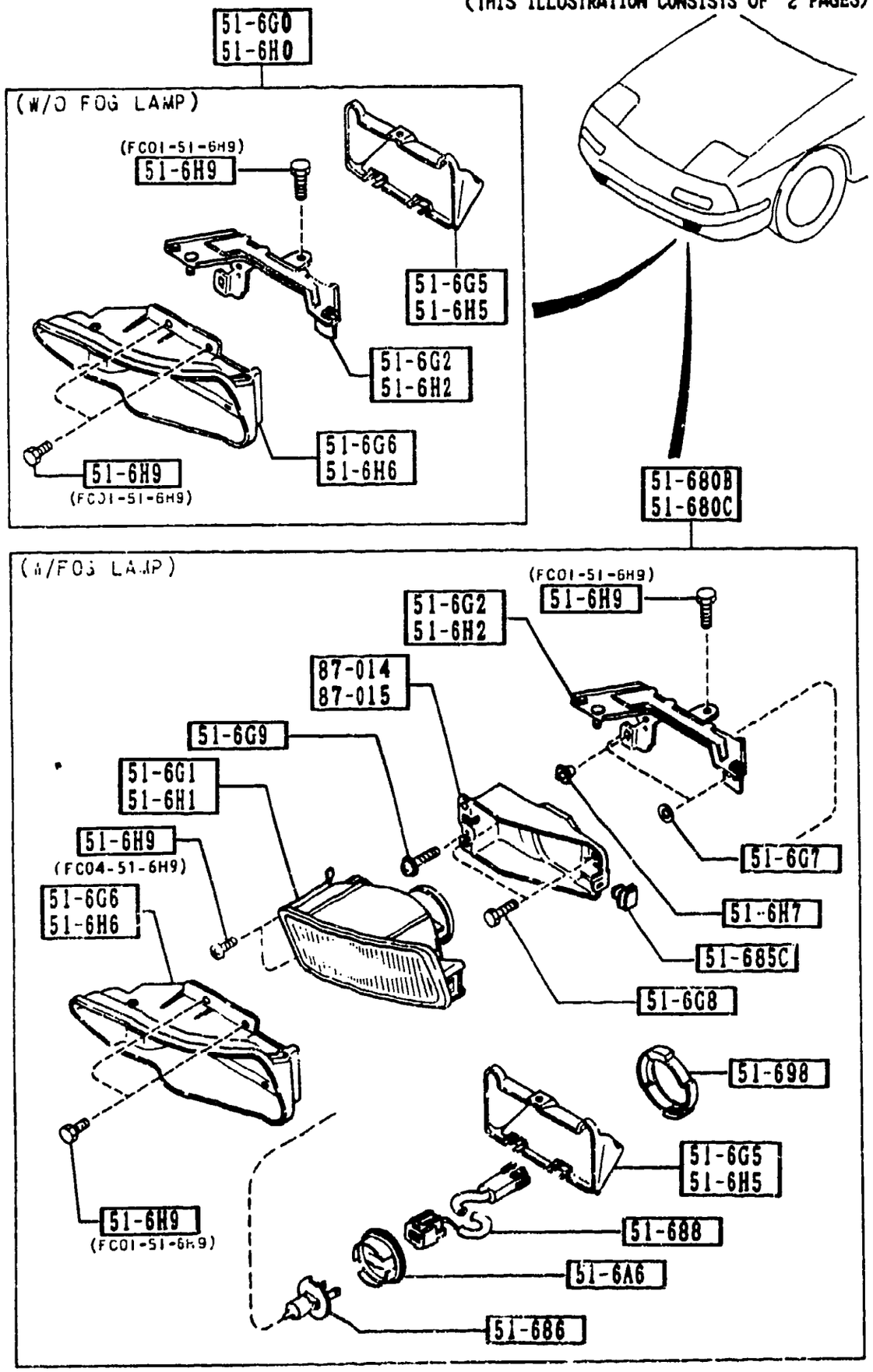


| PART NO. | QTY | MODEL/RESTRICTION | MODEL/RESTRICTION | MODEL/RESTRICTION | FROM-TO |
|---|---|---|---|---|---|
| 51-680C | | LAMP(L),F.FOG | | | |
| FC04-51-690A | 1 | GXL, TURBO, CONV, (W/FOG LAMP) | | | |
| 51-685C | | CLIP | | | |
| FC04-51-685 | 2 | GXL, TURBO, CONV, (W/FOG LAMP) | | | |
| 51-686 | | BULB,FRONT FOG LAMP | | | |
| FC04-51-675 | 2 | GXL, TURBO, CONV, (W/FOG LAMP) | | | |
| 51-688 | | CORD,FRONT FOG LAMP | | | |
| FC04-51-688A | 2 | GXL, TURBO, CONV, (W/FOG LAMP) | | | |
| 51-698 | | CAP,LOCKING | | | |
| FC04-51-698 | 2 | GXL, TURBO, CONV, (W/FOG LAMP) | | | |
| 58-868E | | PLUG,SERVICE COVER | | | |
| 0559-58-868 | 2 | | | | -9823 |
| 67-254 | | CLIP,CABLE | | | |
| S113-67-254A | 2 | | | | -9120 |
| FC04-51-674 | 2 | | | | 9120- |
| 87-014 | | RING(R)MOUNTING | | | |
| FC04-51-6G3 | 1 | GXL, TURBO, CONV, (W/FOG LAMP) | | | |
| 87-015 | | RING(L)MOUNTING | | | |
| FC04-51-6H3 | 1 | GXL, TURBO, CONV, (W/FOG LAMP) | | | |

9120 FC3###-7C0643
9823 FC3###-801679

(CPE)

(THIS ILLUSTRATION CONSISTS OF 2 PAGES)

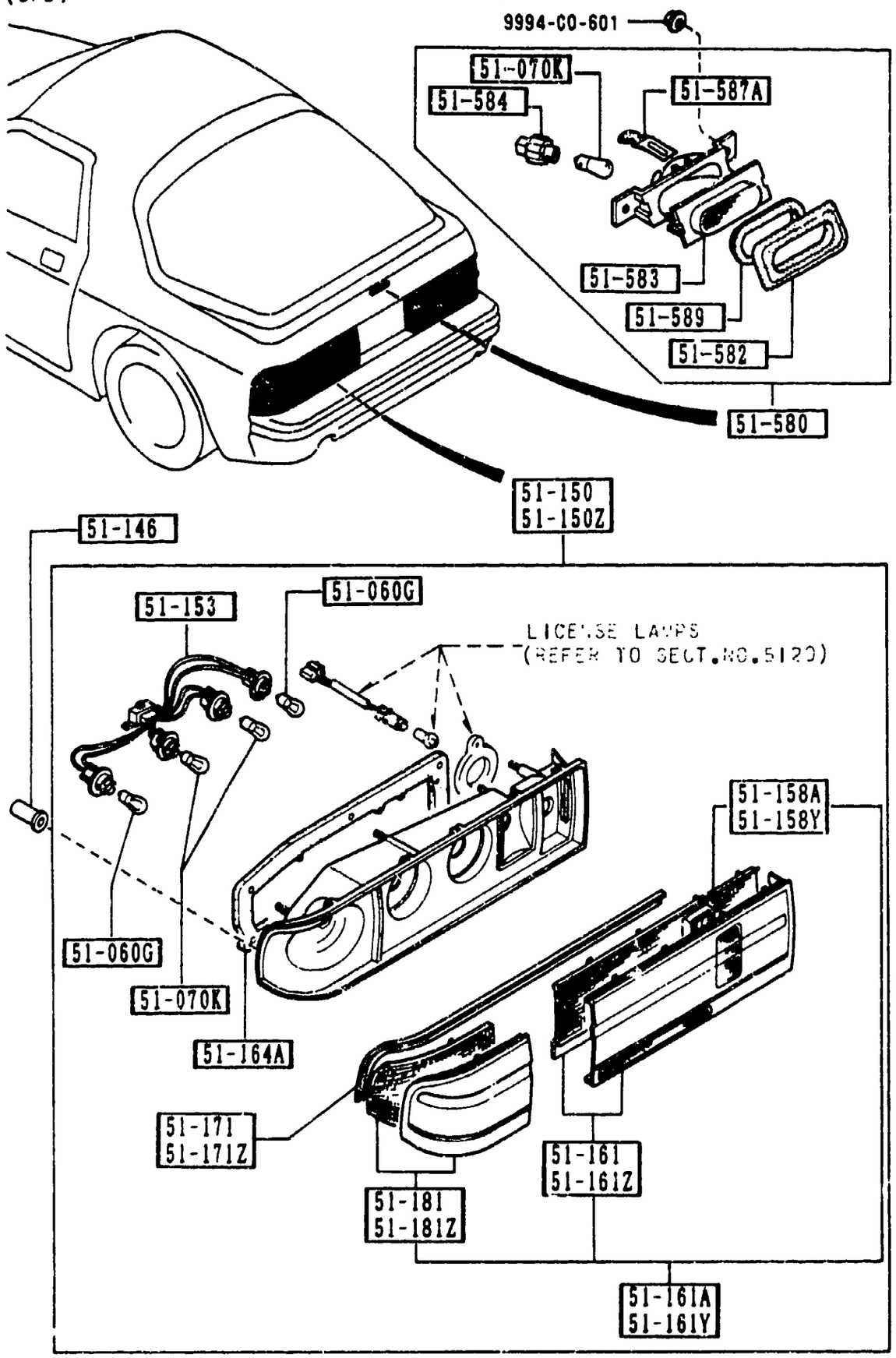


AUFA02

(CONT'D)



(CONVERTIBLE)

(THIS ILLUSTRATION CONSISTS OF 2 PAGES)

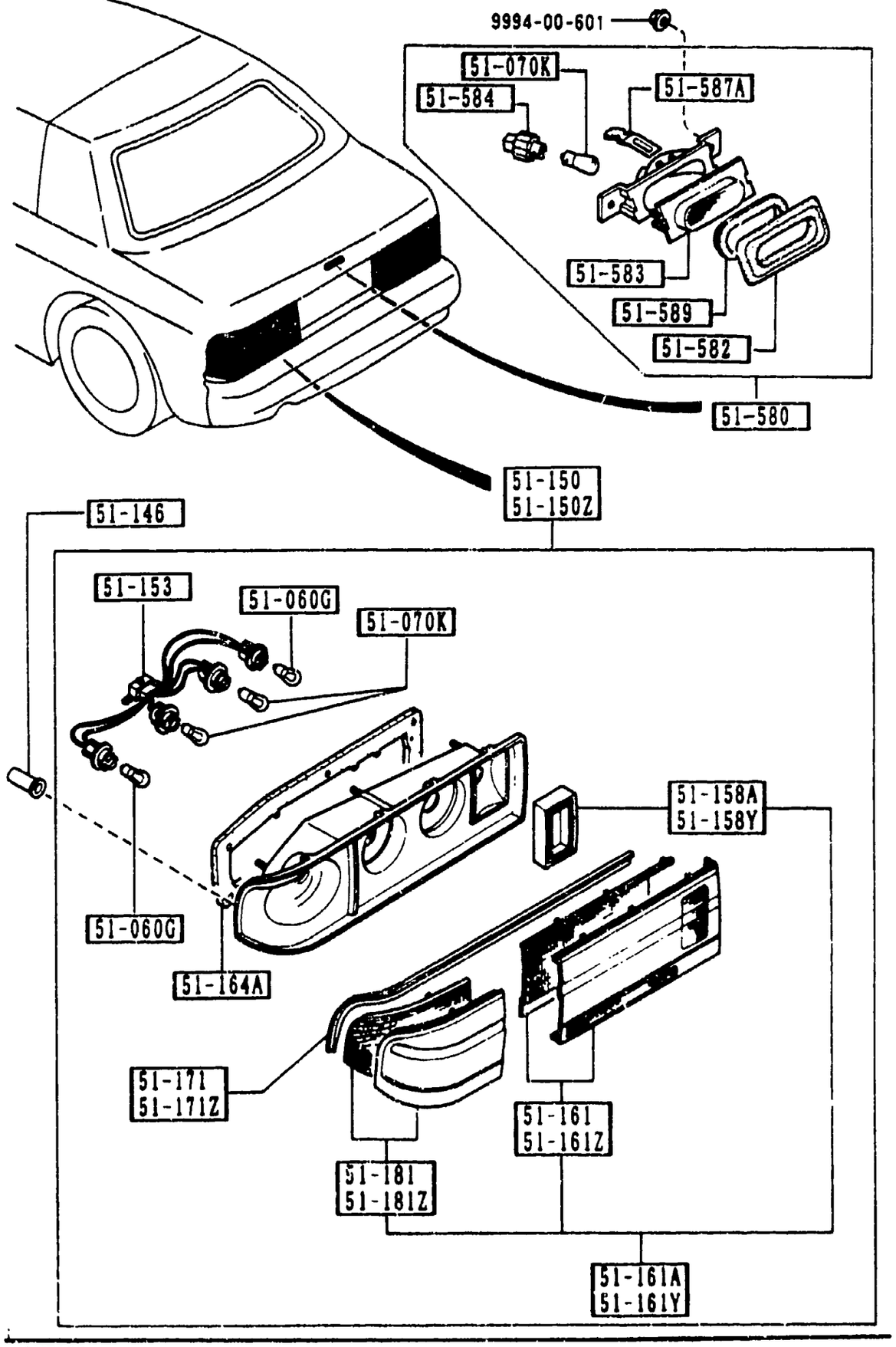


AUFA02

(CPE) (THIS ILLUSTRATION CONSISTS OF 2 PAGES)

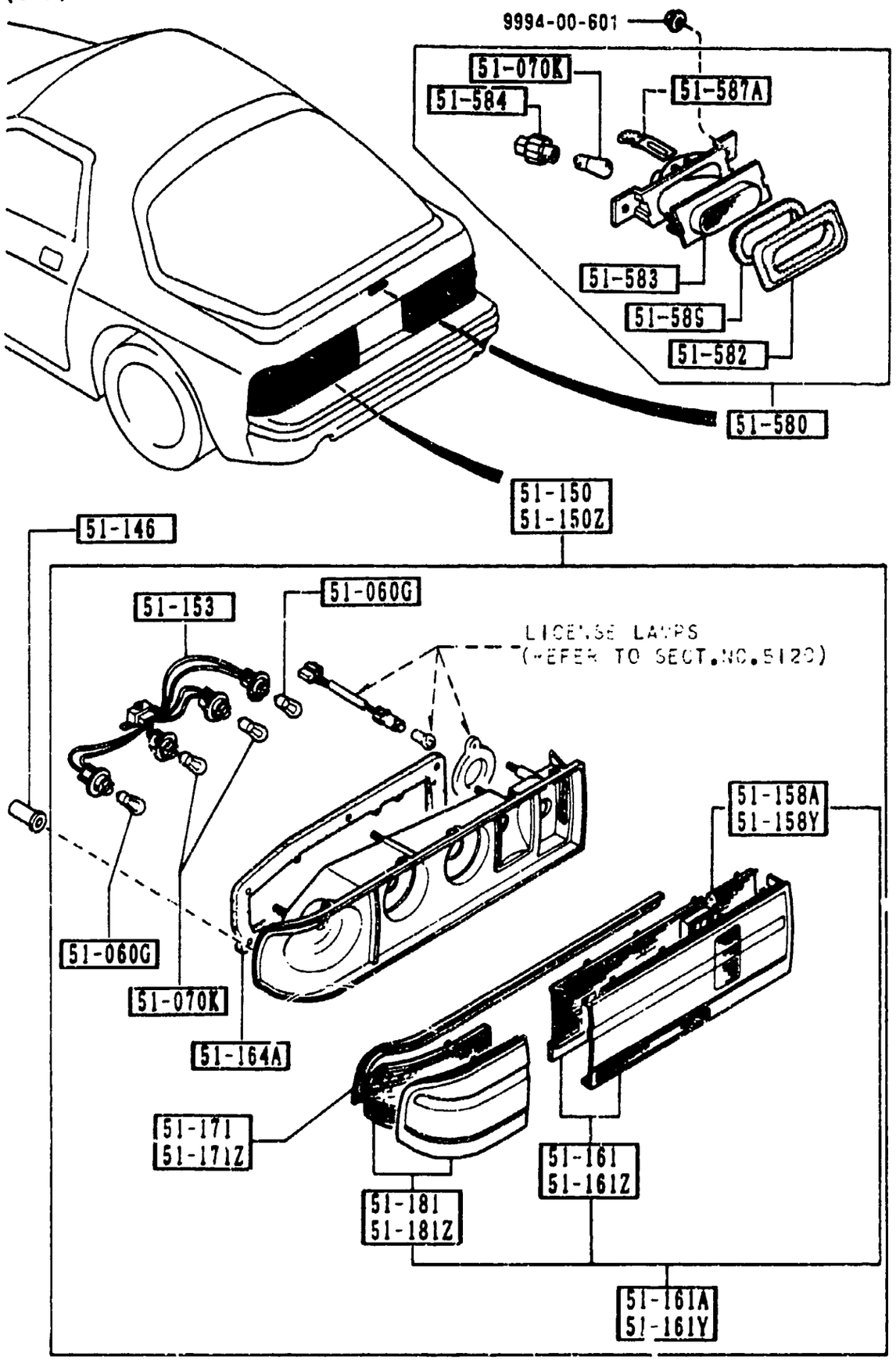






| PART NO. | QTY | MODEL/RESTRICTION | MODEL/RESTRICTION | MODEL/RESTRICTION | FROM-TO |
|---|---|---|---|---|---|
| 51-060G | | BULB | | | |
| 99701-4278 | 4 | 12V 27W/8W | | | |
| 51-070K | | BULB | | | |
| 99701-3270 | 5 | 12V 27W | | | |
| 51-146 | | GROMMET,SCREW-R.COMB | | | |
| FB01-51-141 | 2 | (CPE) | | | |
| FB67-51-141 | 2 | (CONVERTIBLE) | | | |
| 51-150 | | LAMP SET(R),RR.COMB. | | | |
| 88FA-51-150 | 1 | (CPE) | | | |
| 88FB-51-150 | 1 | (CONVERTIBLE) | | | |
| 51-150Z | | LAMP SET(L),RR.COMB. | | | |
| 88FA-51-160 | 1 | (CPE) | | | |
| 88FB-51-160 | 1 | (CONVERTIBLE) | | | |
| 51-153 | | SOCKET,RR.COMB. | | | |
| FC01-51-155 | 2 | | | | |
| 51-158A | | SHADE(R),REAR COMB. LAMP | | | |
| FC01-51-1G1 | 1 | (CPE) | | | |
| FC33-51-1G1 | 1 | (CONVERTIBLE) | | | |
| 51-158Y | | SHADE(L),REAR COMB. LAMP | | | |
| FC01-51-1H1 | 1 | (CPE) | | | |
| FC33-51-1H1 | 1 | (CONVERTIBLE) | | | |
| 51-161 | | LENS(R),RR.COMB. | | | |
| FC01-51-151 AN(FC01-51-151A) | 1 | | | | -9401 |
| FC33-51-151 AN(FC33-51-151A) | 1 | | | | -9401 |
| FC01-51-151A | 1 | (CPE) | | | 9401- |
| FC33-51-151A | 1 | (CONVERTIBLE) | | | 9401- |
| 51-161A | | LENS & BODY(R),RR COMB. | | | |
| FC01-51-170 | 1 | | | | -9401 |

9401 FC3####-705390

(CONVERTIBLE) (THIS ILLUSTRATION CONSISTS OF 2 PAGES)

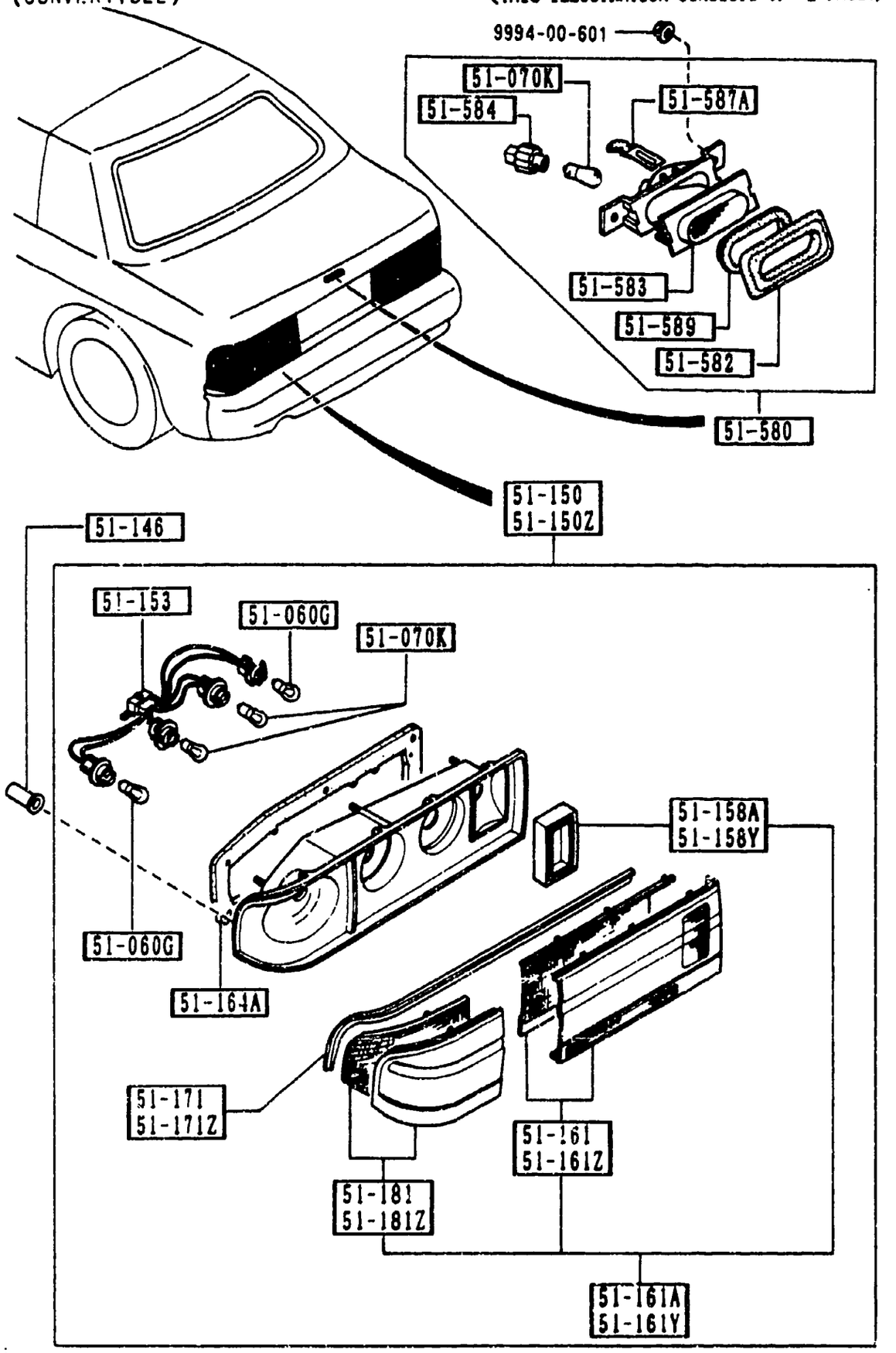


AUFA02



| PART NO. | QTY | MODEL/RESTRICTION | MODEL/RESTRICTION | MODEL/RESTRICTION | FROM-TO |
|---|---|---|---|---|---|
| CONT'D AN(FC01-51-170A) | | | | | |
| FC33-51-170 AN(FC33-51-170A) | 1 | | | | -9401 |
| FC01-51-170A | 1 | (CPE) | | | 9401- |
| FC33-51-170A | 1 | (CONVERTIBLE) | | | 9401- |
| +---------+ \| 51-161Y \| +---------+ | | LENS & BODY(L),RR COMB. | | | |
| FC01-51-180 AN(FC01-51-180A) | 1 | | | | -9401 |
| FC33-51-180 AN(FC33-51-180A) | 1 | | | | -9401 |
| FC01-51-180A | 1 | (CPE) | | | 9401- |
| FC33-51-180A | 1 | (CONVERTIBLE) | | | 9401- |
| +---------+ \| 51-161Z \| +---------+ | | LENS(L),RR.COMB. | | | |
| FC01-51-161 AN(FC01-51-161A) | 1 | | | | -9401 |
| FC33-51-161 AN(FC33-51-161A) | 1 | | | | -9401 |
| FC01-51-161A | 1 | (CPE) | | | 9401- |
| FC33-51-161A | 1 | (CONVERTIBLE) | | | 9401- |
| +- -------+ \| 51 164A \| +---------+ | | GASKET,RR.COMB. | | | |
| F801-51-156 | 2 | | | | |
| +---------+ \| 51-171 \| +---------+ | | PROTECTOR(R),RR.COMB | | | |
| FC01-51-159 AN(FC01-51-159A) | 1 | | | | -9401 |
| FC33-51-159 AN(FC33-51-159A) | 1 | | | | -9401 |
| FC01-51-159A | 1 | (CPE) | | | 9401- |
| FC33-51-159A | 1 | (CONVERTIBLE) | | | 9401- |
| +---------+ \| 51-171Z \| +---------+ | | PROTECTOR(L),RR.COMB | | | |
| FC01-51-169 AN(FC01-51-169A) | 1 | | | | -9401 |
| FC33-51-169 AN(FC33-51-169A) | 1 | | | | -9401 |
| FC01-51-169A | 1 | (CPE) | | | 9401- |
| FC33-51-169A | 1 | (CONVERTIBLE) | | | 9401- |

9401 FC3###-705390

CAT. AUFA02-06

1992-05

5110 REAR COMBINATION LAMPS (1/2)

(CPE) (THIS ILLUSTRATION CONSISTS OF 2 PAGES)

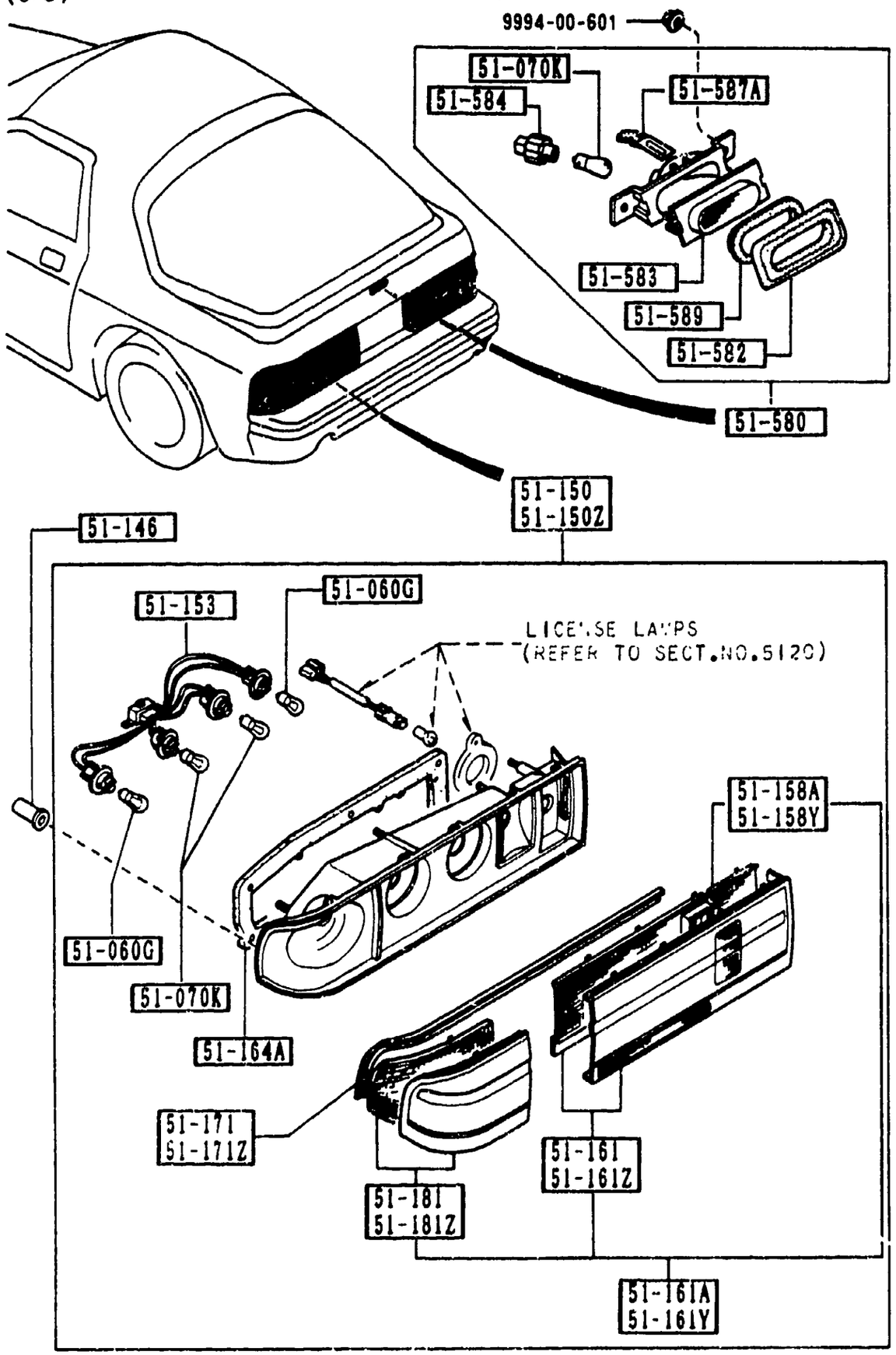


| PART NO. | QTY | MODEL/RESTRICTION | MODEL/RESTRICTION | MODEL/RESTRICTION | FROM-TO |
|---|---|---|---|---|---|
| 51-181 | | LENS NO.2(R),RR.COMB | | | |
| FC01-51-152 A (FC01-51-152A) | 1 | | | | -9301 |
| FC01-51-152A | 1 | | | | 9301- |
| 51-181Z | | LENS NO.2(L),RR.COMB | | | |
| FC01-51-162 A (FC01-51-162A) | 1 | | | | -9301 |
| FC01-51-162A | 1 | | | | 9301- |
| 51-580 | | LAMP,STOP-HI.MOUNT. | | | |
| FB01-51-580B | 1 | | | | |
| 51-582 | | GASKET,STOP LAMP-HI. MOUNT | | | |
| FB01-51-582A | 1 | | | | |
| 51-583 | | LENS,STOP LAMP-HI.MO UNT | | | |
| FB01-51-583A | 1 | | | | |
| 51-584 | | SOCKET,STOP LAMP-HI. MOUNT | | | |
| FB01-51-584A | 1 | | | | |
| 51-587A | | CLIP,STOP LAMP-HI. M OUNT | | | |
| FB01-51-587 | 1 | | | | |
| 51-589 | | PROTECTOR,STOP LAMP- HI.MO | | | |
| FB01-51-586 | 1 | | | | |

9301 FC3✱✱✱-7C4194

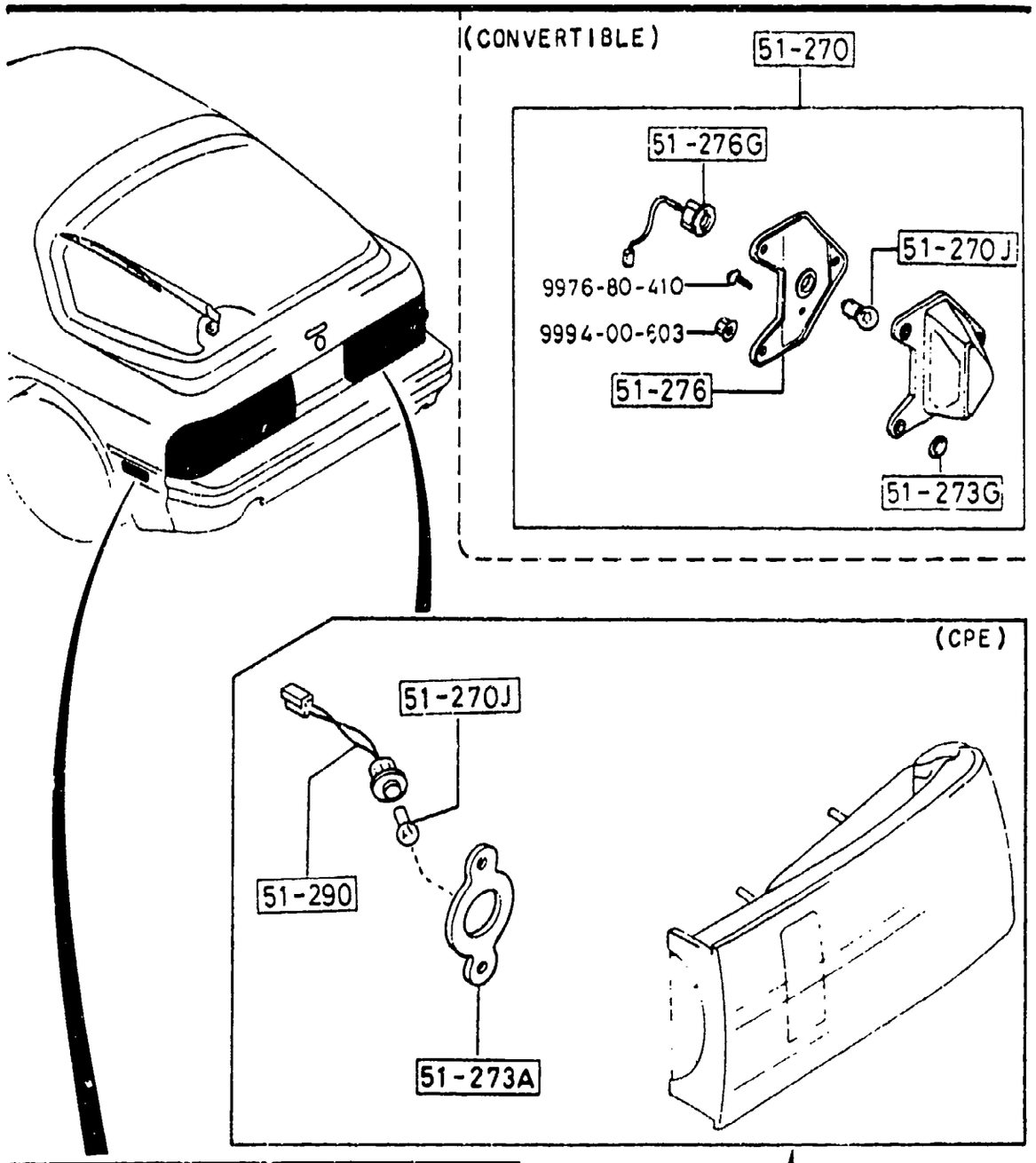


| PART NO. | QTY | MODEL/RESTRICTION | MODEL/RESTRICTION | MODEL/RESTPICTION | FROM-TO |
|---|---|---|---|---|---|
| 51-110J | | BULB | | | |
| 99701-6038 | 2 | 12V 3.8W | | | |
| 51-270 | | LAMP,LICENSE | | | |
| 8BF1-51-270 | 2 | (CONVERTIBLE) | | | |
| 51-270J | | BULB | | | |
| 99701-2070 | 2 | 12V 7.5W | | | |
| 51-273A | | GASKET,LICENSE | | | |
| FB01-51-157 | 2 | (CPE) | | | |
| 51-273G | | GASKET,LICENSE LAMP | | | |
| FB67-51-273 | 2 | (CONVERTIBLE) | | | |
| 51-276 | | SHADE,LAMP-LICENSE | | | |
| FB67-51-276 | 2 | (CONVERTIBLE) | | | |
| 51-276G | | SOCKET,LICENSE LAMP | | | |
| FB67-51-272 | 2 | (CONVERTIBLE) | | | |
| 51-290 | | CORD,LICENSE LAMP | | | |
| FB01-51-172 | 2 | (CPE) | | | |
| 51-550A | | LAMP(R),SIDE TURN-RR | | | |
| 8BF1-51-550 | 1 | | | | |
| 51-550Y | | LAMP(L),SIDE TURN-RR | | | |
| 8BF1-51-560 | 1 | | | | |
| 51-554 | | SOCKET,RR SIDE TURN LAMP | | | |
| FB01-51-554 | 2 | | | | |
| 51-555 | | UNIT(R),SIDE TURN-RR | | | |
| FB01-51-555 | 1 | | | | |
| 51-562 | | GASKET,RR.SIDE TURN | | | |
| FB01-51-552A | 2 | | | | |

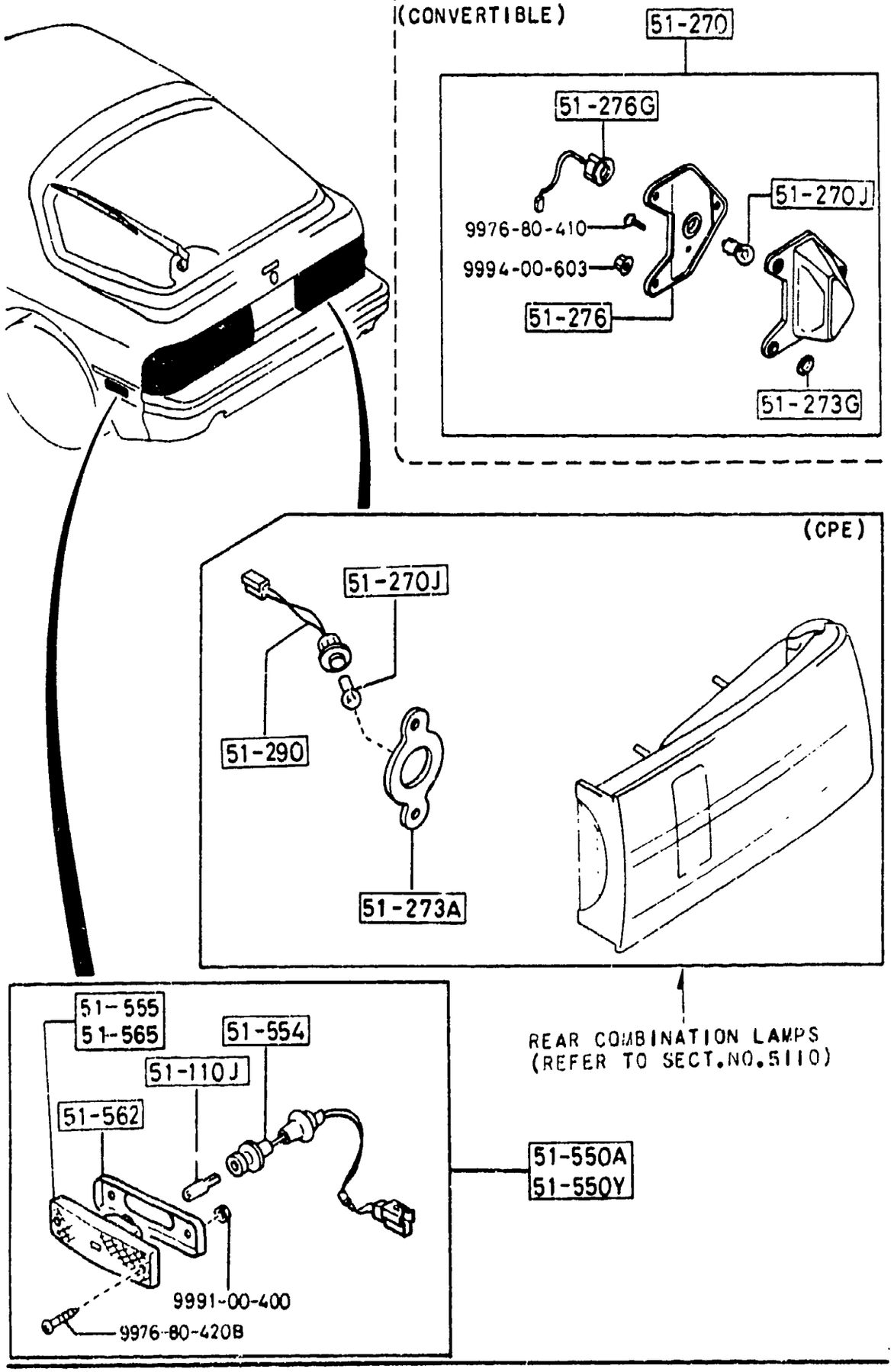


AUFA02



| PART NO. | QTY | MODEL/RESTRICTION | MODEL/RESTRICTION | MODEL/RESTRICTION | FROM-TO |
|---|---|---|---|---|---|
| 51-565 | | UNIT(L),SIDE TURN-RR | | | |
| FB01-51-565 | 1 | | | | |

CAT. AUFA02-06

1992-05

(CPE)

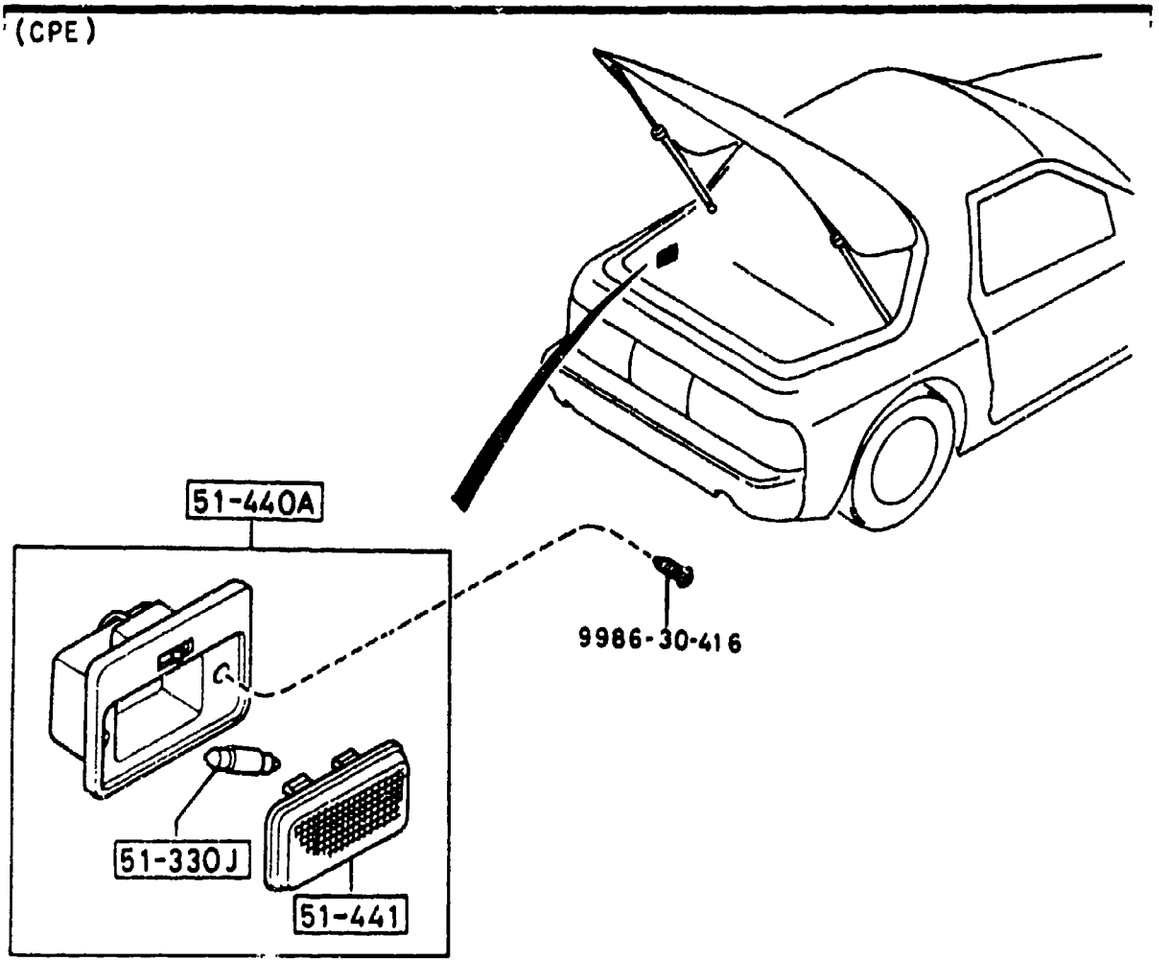


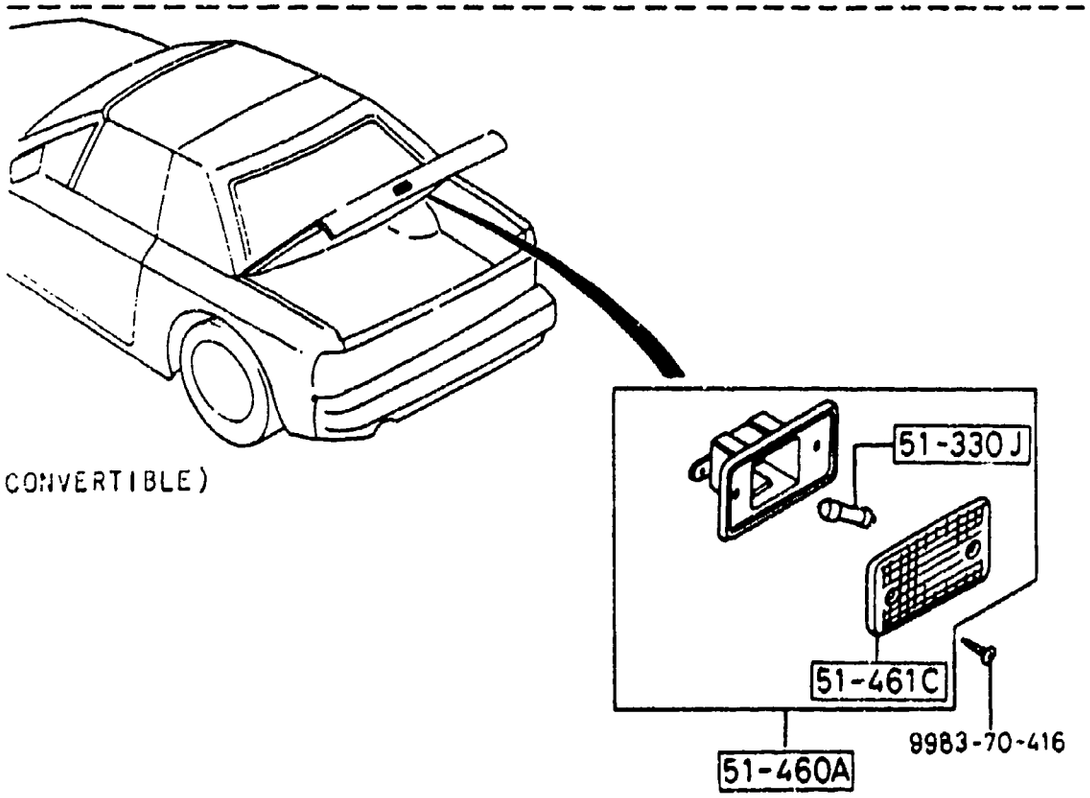


(CONVERTIBLE)

| PART NO. | QTY | MODEL/RESTRICTION | MODEL/RESTRICTION | MODEL/RESTRICTION | FROM-TO |
|---|---|---|---|---|---|
| 51-330J | | BULB | | | |
| 99701-5050 | 1 | 12V 5W | | | |
| 51-440A | | LAMP,CARGO ROOM | | | |
| FC01-51-440 | 1 | (CPE) | | | |
| 02 | | FD8 FD9 FE0 BLACK | | | |
| 51-441 | | LENS | | | |
| FC01-51-441 | 1 | (CPE) | | | |
| 51-460A | | LAMP,COURTESY | | | |
| 8545-51-460 | 1 | (CONVERTIBLE) | | | |
| 51-461C | | LENS,COURTESY | | | |
| 8545-51-461 | 1 | (CONVERTIBLE) | | | |

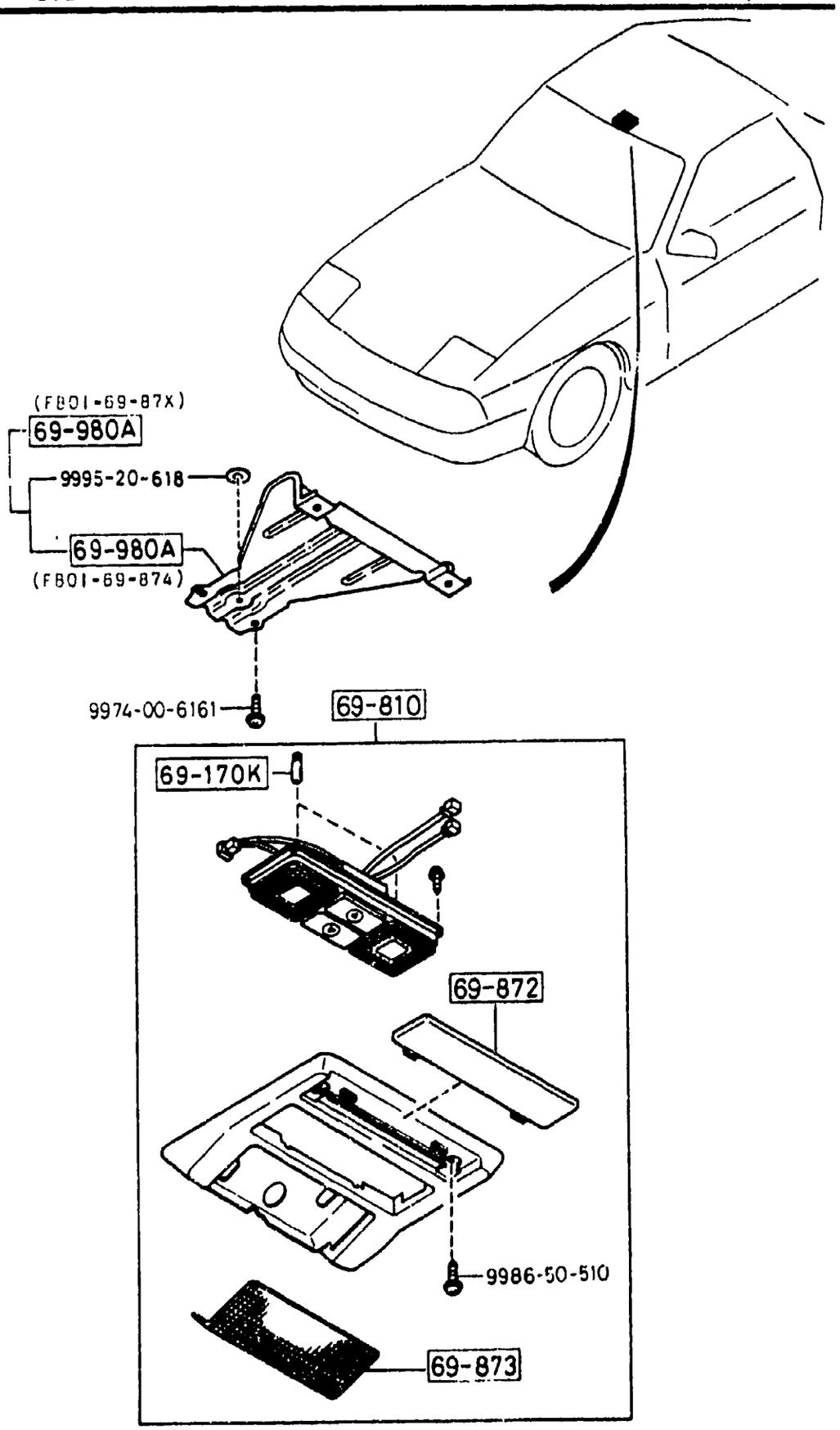


| PART NO. | QTY | MODEL/RESTRICTION | MODEL/RESTRICTION | MODEL/RESTRICTION | FROM-TO |
|---|---|---|---|---|---|
| 69-170K | | BULB,INTERIOR MIRROR | | | |
| 99701-6050 | 2 | 12V 5W | | | |
| 69-810 | | CONSOLE,OVERHEAD | | | |
| FB01-69-870A | 1 | NON USA, | | | |
| 02 | | FD8 FE1 BLACK | | | |
| 19 | | FE0 RED | | | |
| 48 | | FD9 BLUE | | | |
| FB02-69-870A | 1 | (W/O SUN-RF) | | | |
| 02 | | FD8 FE1 BLACK | | | |
| 19 | | FE0 RED | | | |
| 48 | | FD9 BLUE | | | |
| FB03-69-870A | 1 | (SUNROOF) | | | |
| 02 | | FD8 FE1 BLACK | | | |
| 19 | | FE0 RED | | | |
| 48 | | FD9 BLUE | | | |
| 69-872 | | COVER,OVER HEAD CONSOLE | | | |
| FB01-69-872 | 1 | | | | |
| 02 | | FD8 FE1 BLACK | | | |
| 19 | | FE0 RED | | | |
| 48 | | FD9 BLUE | | | |
| 69-873 | | LENS,ROOM LAMP-HEAD CONS. | | | |
| FB01-69-873 | 1 | | | | |
| 69-980A | | BRACKET,O/HEAD CONSOLE | | | |
| FB01-69-87X | 1 | (W/O SUN-RF) | | | |
| FB01-69-874 | 1 | (W/O SUN-RF) | | | |

| LO.NO | SEC.NO | SECTION NAME |
|---|---|---|
| 3-C03 | 0900 | KEY SETS |
| 3-F03 | 5000 | FRONT BUMPER |
| 3-H03 | 5010 | REAR BUMPER |
| 3-J03 | 5020 | HEAD LAMP CLEANER |
| 3-L03 | 5030 | WINDOW MOULDINGS |
| 3-M03 | 5040 | BODY MOULDINGS (COUPE) |
| 3-E04 | 5060 | SIDE PROTECTORS |
| 3-I04 | 5100 | HEAD LAMPS |
| 3-J04 | 5103 | HEAD LAMP RETRACTORS |
| 3-N04 | 5105 | FRONT COMBINATION LAMPS |
| 3-G05 | 5110 | REAR COMBINATION LAMPS |
| 3-K05 | 5120 | LICENSE LAMPS |
| 3-M05 | 5125 | INTERIOR LAMPS |
| 3-N05 | 5130 | OVERHEAD CONSOLE |
| 3-C06 | 5170 | ORNAMENTS |
| 3-D06 | 5180 | COWL & EXTRACTOR GRILLES |
| 3-G06 | 5230 | BONNET |
| 3-J06 | 5260 | TRUNK LID (CONVERTIBLE) |
| 3-L06 | 5310 | BODY PANELS (FRONT) (COUPE) |
| 3-C07 | 5310 A | BODY PANELS (FRONT) (CONVERTIBLE) |
| 3-F07 | 5320 | BODY PANELS (FENDER & WHEEL APRON) |
| 3-K07 | 5330 | BODY PANELS (DASH & COWL PANEL) |
| 3-L07 | 5340 | BODY PANELS (SIDE) (COUPE) |
| 3-E08 | 5340A | BODY PANELS (SIDE) (CONVERTIBLE) |
| 3-K08 | 5360 | BODY PANELS (ROOF) (W/O SUN ROOF) |
| 3-L08 | 5360 A | BODY PANELS (ROOF) (SUN ROOF) |
| 3-M08 | 5370 | BODY PANELS (FLOOR) (COUPE) |
| 3-D09 | 5370 A | BODY PANELS (FLOOR) (CONVERTIBLE) |
| 3-H09 | 5380 | FLOOR ATTACHMENTS (HOLE COVERS) |
| 3-J09 | 5390 | FLOOR ATTACHMENTS |
| 3-C10 | 5500 | DASHBOARD EQUIPMENTS |
| 3-F10 | 5520 | METER HOOD |
| 3-G10 | 5530 | SPEEDOMETER CABLE |
| 3-H10 | 5540 | METER COMPONENTS |
| 3-J10 | 5560 | DASHBOARD & RELATED PARTS |
| 3-E11 | 5570 | CONSOLE |
| 3-H11 | 5580 | VENTILATOR |
| 3-J11 | 5700 | FRONT SEATS (COUPE) |
| 3-E13 | 5700A | FRONT SEATS (CONVERTIBLE) |
| 3-K13 | 5750 | REAR SEATS (COUPE) |
| 3-M13 | 5790 | SEAT BELTS (COUPE) |
| 3-C14 | 5790A | SEAT BELTS (CONVERTIBLE) |
| 3-D14 | 5800 | FRONT DOORS (COUPE) |
| 3-G14 | 5800A | FRONT DOORS (CONVERTIBLE) |
| 3-K14 | 5830 | FRONT DOOR MECHANISMS (COUPE) |
| 3-[illegible]5 | 5830A | FRONT DOOR MECHANISMS (CONVERTIBLE) |
| 3-J[illegible] | 5840 | FRONT DOOR TRIMS & RELATED PARTS (COUPE) |
| 3-H16 | 5840A | FRONT DOOR TRIMS & RELATED PARTS (CONVERTIBLE) |

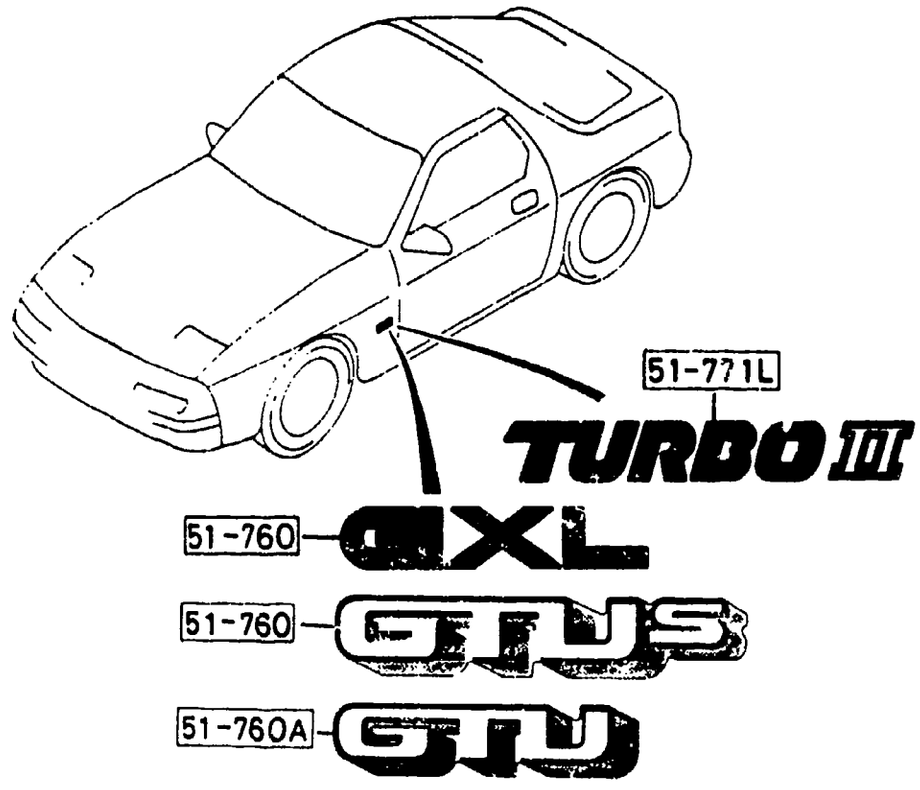


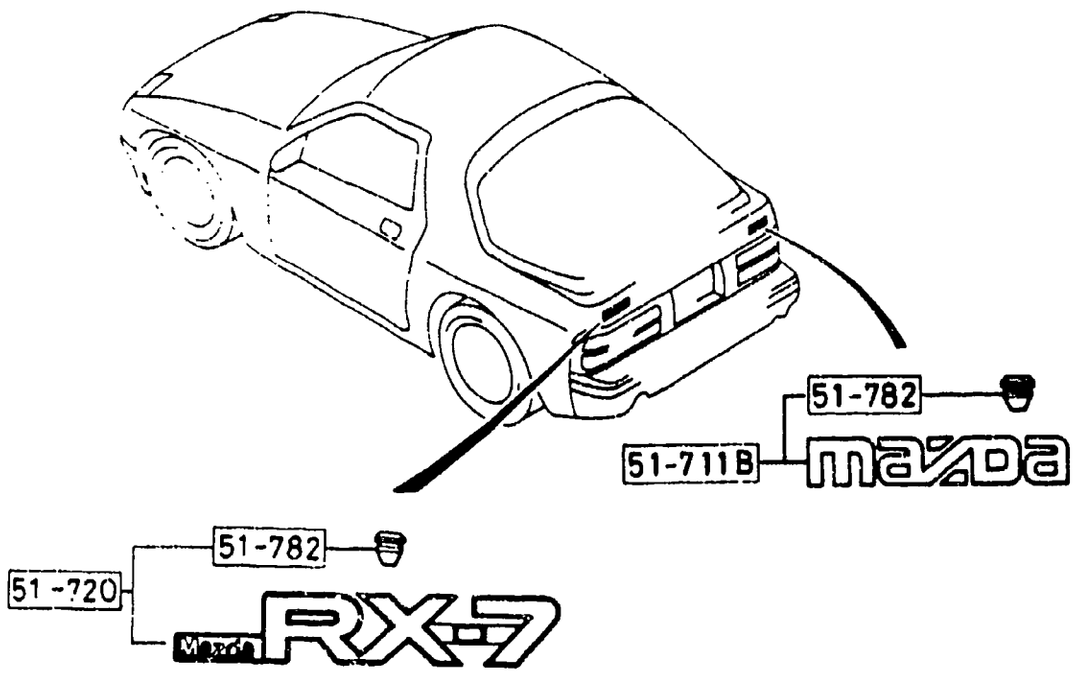


| PART NO. | QTY | MODEL/RESTRICTION | MODEL/RESTRICTION | MODEL/RESTRICTION | FROM-TO |
|---|---|---|---|---|---|
| \| 51-711B \| | | ORNAMENT,MAKER NAME-REAR | | | |
| FB02-51-740 | 1 | MAZDA | | | |
| \| 51-720 \| | | ORNAMENT,CAR NAME-REAR | | | |
| FB02-51-720 | 1 | MAZDA RX-7 | | | |
| \| 51-760 \| | | ORNAMENT,GRADE-REAR | | | |
| FB05-51-761 | 2 | (GXL)<br>(CPE) | | | |
| 01 | | UC WY 1F 3L 4F BLACK | | | |
| 08 | | 6H GU PZ SQ 3G 5D 5N SILVER | | | |
| FC05-51-761 | 2 | (GTUS)<br>(CPE) | | | |
| 18 | | UC WY 1F RED | | | |
| 30 | | PZ SQ 3G 5D 5N 6H WHITE | | | |
| \| 51-760A \| | | ORNAMENT,GRADE-SIDE | | | |
| FC02-51-761 | 2 | (GTU)<br>(CPE) | | | |
| 18 | | UC WY 1F RED | | | |
| 30 | | PZ SQ 3G 5D 5N 6H WHITE | | | |
| \| 51-771L \| | | ORNAMENT,TURBO-SIDE | | | |
| FB51-51-761 | 2 | (TURBO 2)<br>(CPE) | | | |
| 08 | | 6H PZ SN SQ 2N 3G 4E 5D 5H SILVER | | | |
| 10 | | UC WY 1F 3L 4F RED | | | |
| \| 51-782 \| | | CLIP,TUBULAR | | | |
| H001-51-782 | 7 | | | | |

(CPE)

(THIS ILLUSTRATION CONSISTS OF 2 PAGES)

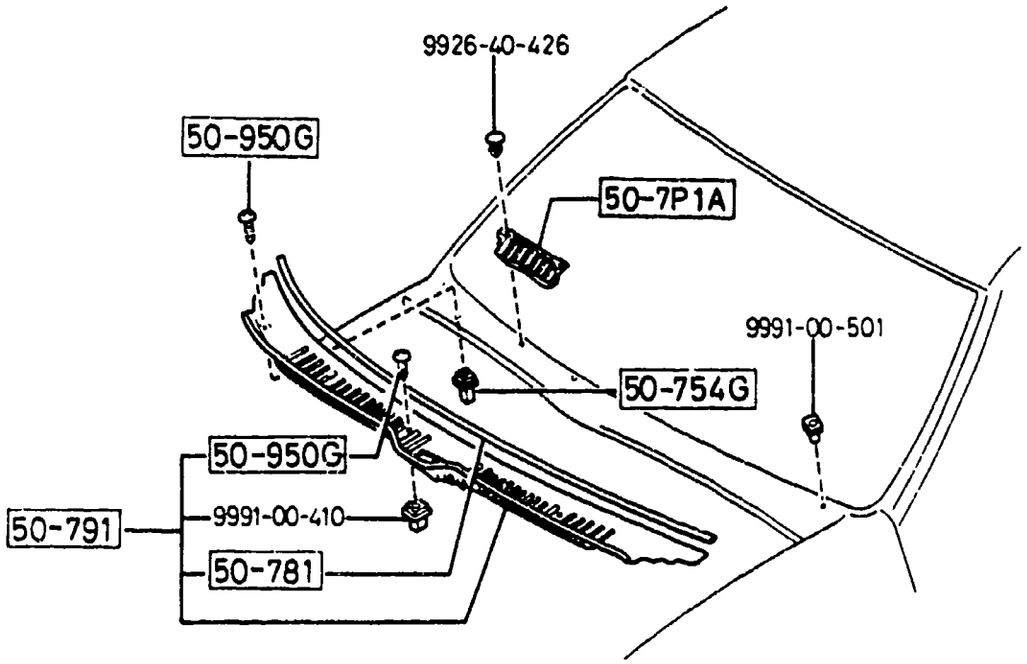


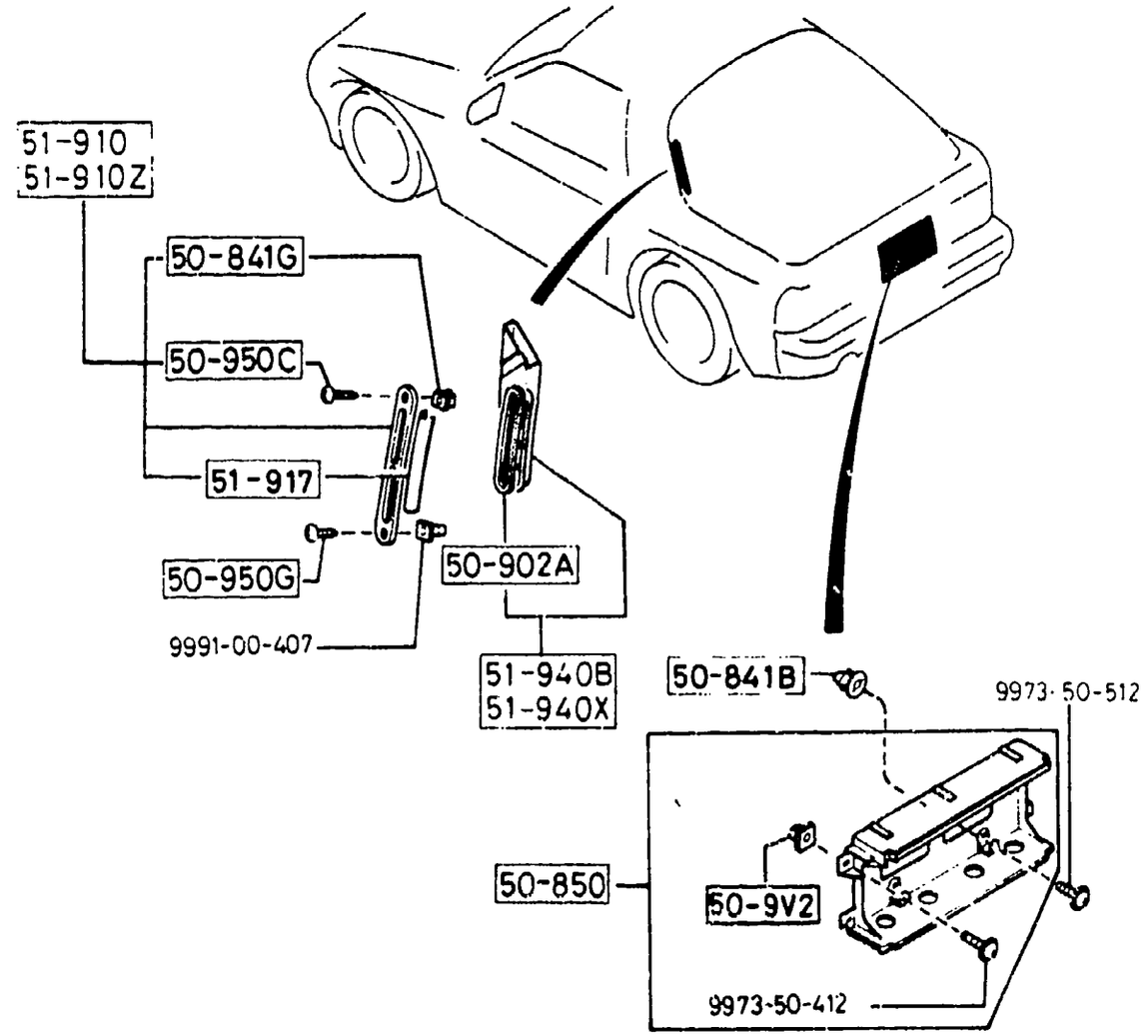


AUFA02

(CONT'D)



(CONVERTIBLE)

(THIS ILLUSTRATION CONSISTS OF 2 PAGES)

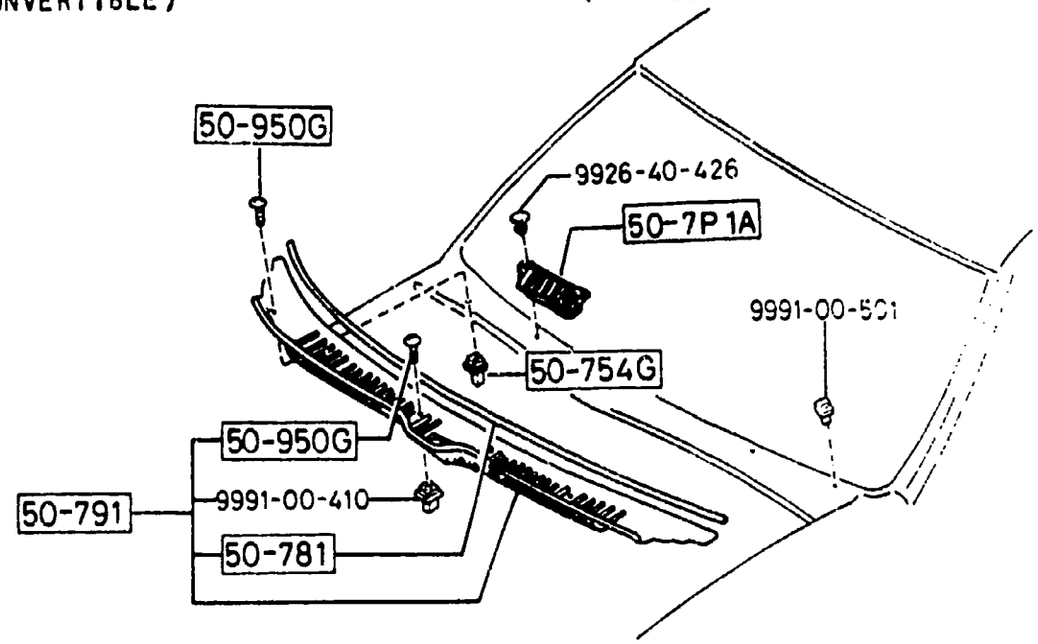


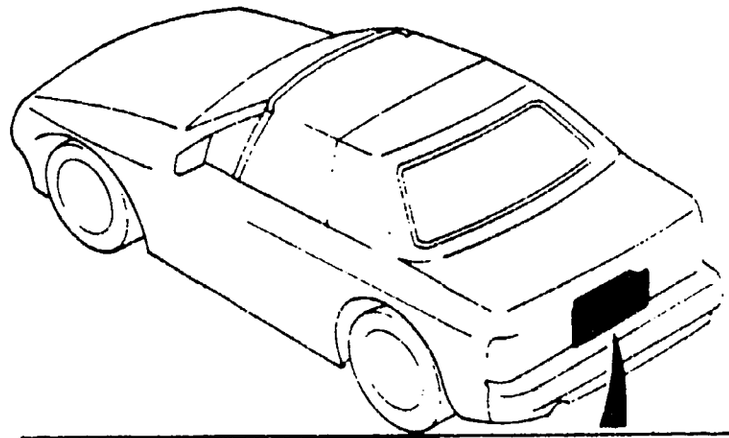

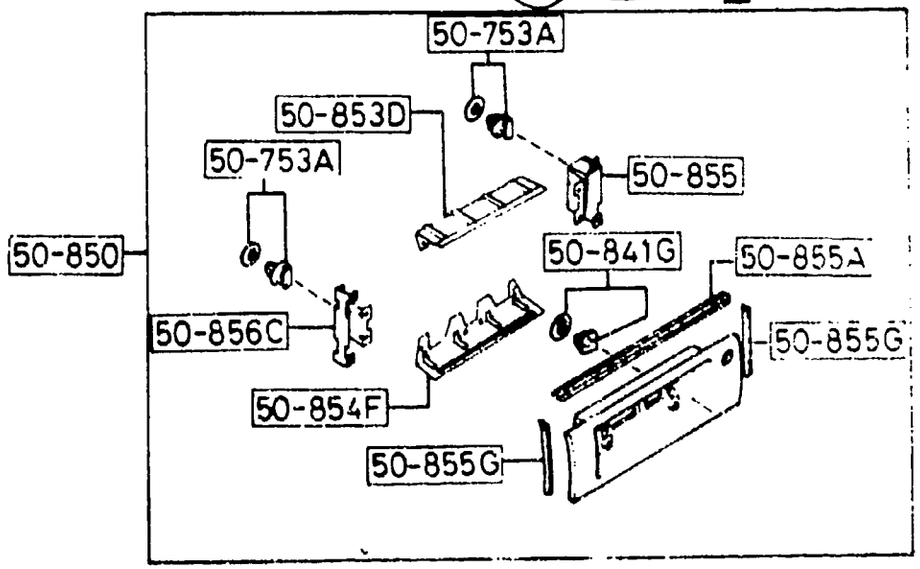


AUFA02

(CPE) (THIS ILLUSTRATION CONSISTS OF 2 PAGES)

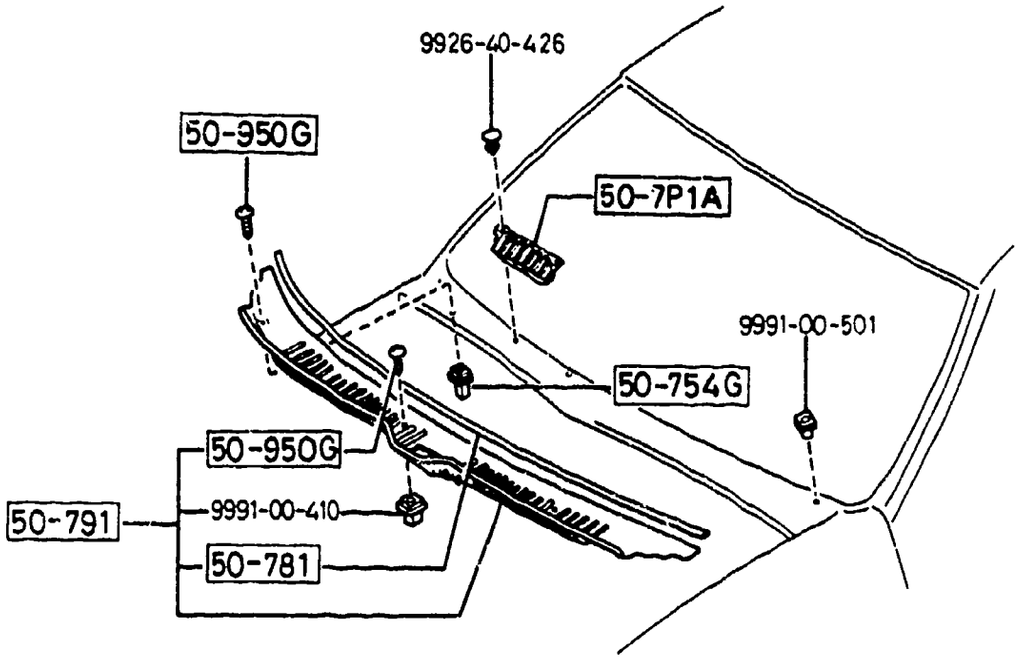


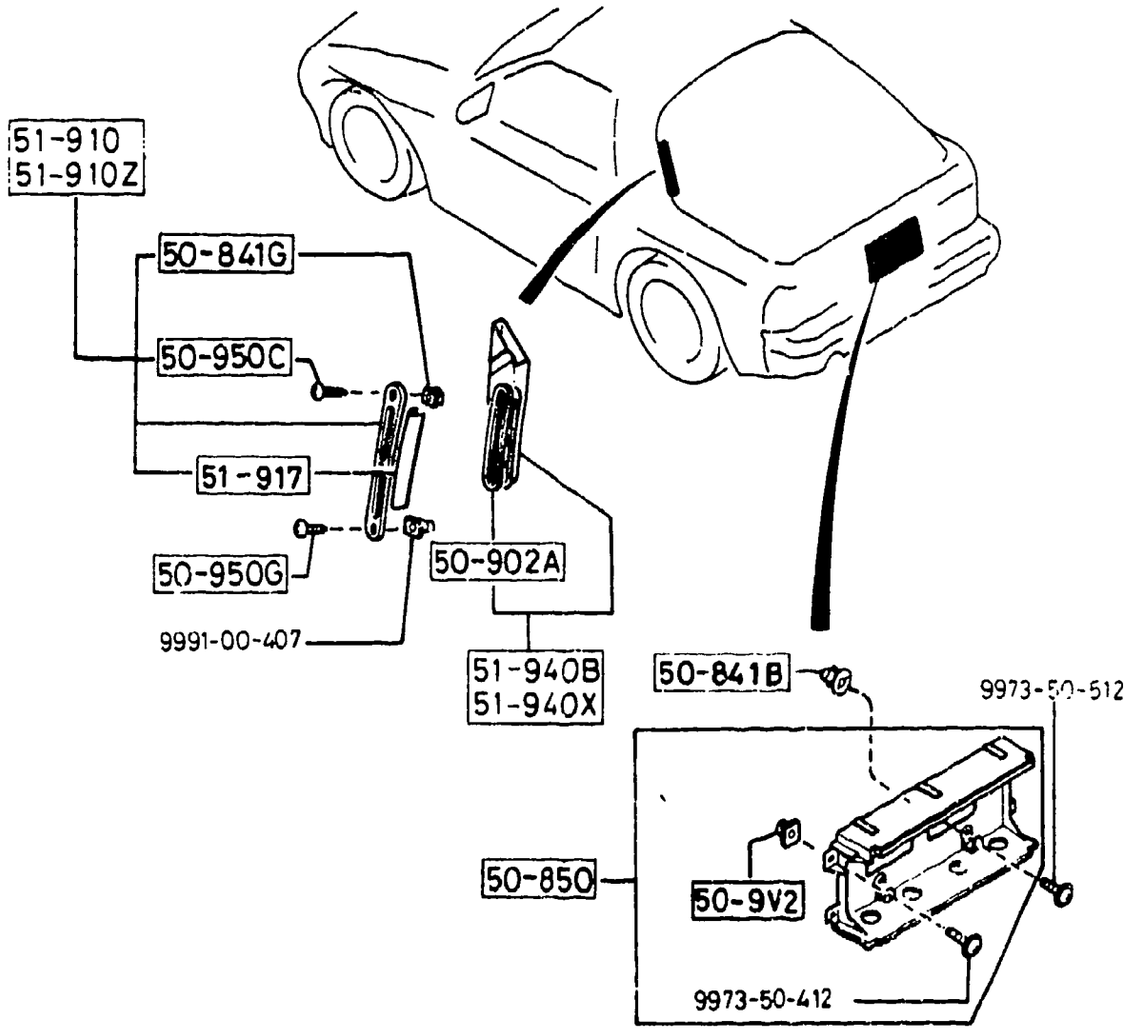


5180 -1 COWL & EXTRACTOR GRILLES

| PART NO. | QTY | MODEL/RESTRICTION | MODEL/RESTRICTION | MODEL/RESTRICTION | FROM-TO |
|---|---|---|---|---|---|
| 50-7P1A | | GRILLE(R),COWL-LOWER | | | |
| FB01-50-7P1A | 1 | | | | |
| 50-753A | | FASTENER | | | |
| G043-50-753 | 4 | (CONVERTIBLE) | | | |
| 50-754G | | GROMMET,SCREW | | | |
| FB01-50-818 | 4 | | | | |
| 50-781 | | PROTECTOR,COWL GRILL | | | |
| FB01-50-792 | 1 | | | | |
| 50-791 | | GRILLE,COWL | | | |
| FB01-50-790B | 1 | | | | |
| 50-841B | | GROMMET,SCREW | | | |
| FB01-50-841 | 3 | (CPE) | | | |
| 50-841G | | GROMMET,SCREW | | | |
| F044-51-912 | 2 | (CPE) | | | |
| | 3 | (CONVERTIBLE) | | | |
| 50-850 | | FINISHER,REAR | | | |
| FB67-50-850B | 1 | (CONVERTIBLE) | | | |
| FC01-50-850 | 1 | (CPE) | | | |
| 50-853D | | REINF.(UP),FINISHER-REAR | | | |
| FB67-50-853 | 1 | (CONVERTIBLE) | | | |
| 50-854F | | REINF.(LWR),FINISHER-REAR | | | |
| FB67-50-854 | 1 | (CONVERTIBLE) | | | |
| 50-855 | | BRACKET NO.1,FINISHER-REAR | | | |
| FB67-50-855A | 1 | (CONVERTIBLE) | | | |
| 50-855A | | PROTECTOR,RR.FINISHE | | | |
| FB67-50-852 | 1 | (CONVERTIBLE) | | | |
| 50-855G | | PROTECTOR,R.FINISHER | | | |
| FB67-50-857A | 2 | (CONVERTIBLE) | | | |

(CONVERTIBLE) (THIS ILLUSTRATION CONSISTS OF 2 PAGES)

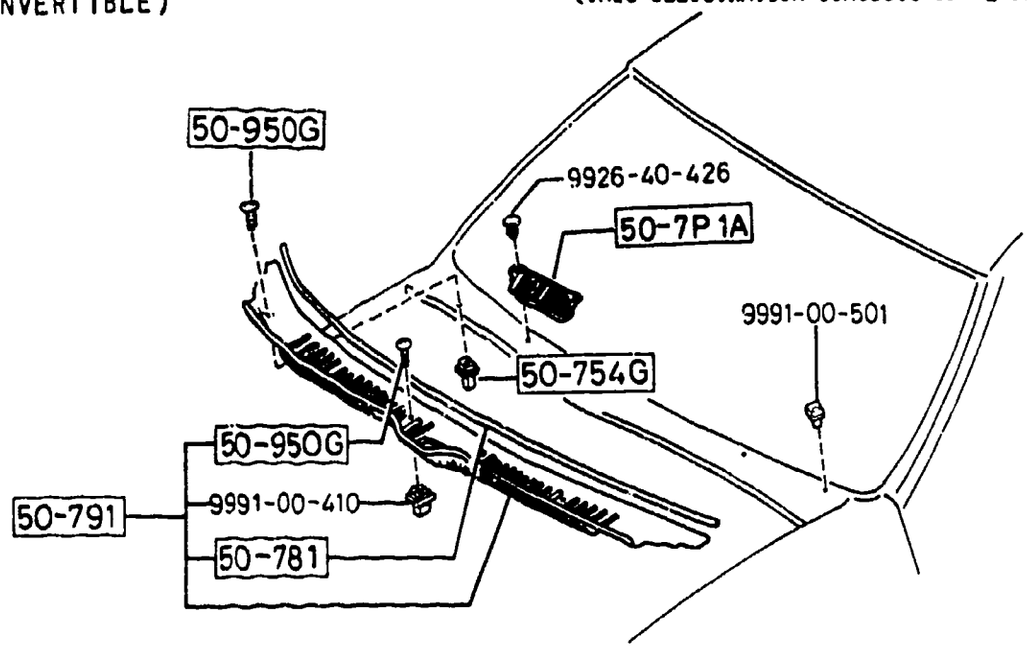


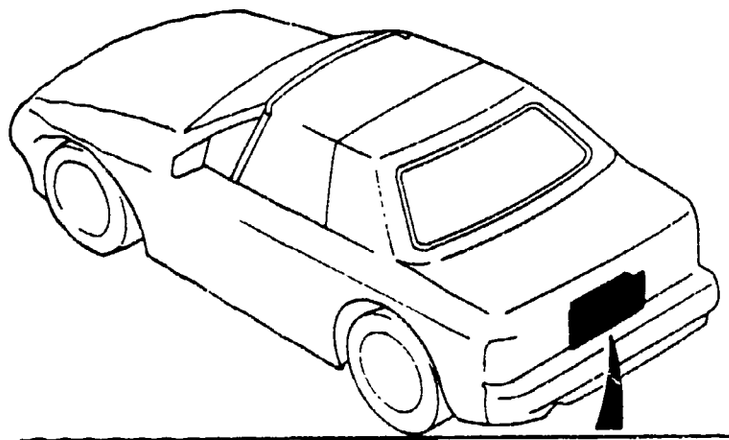

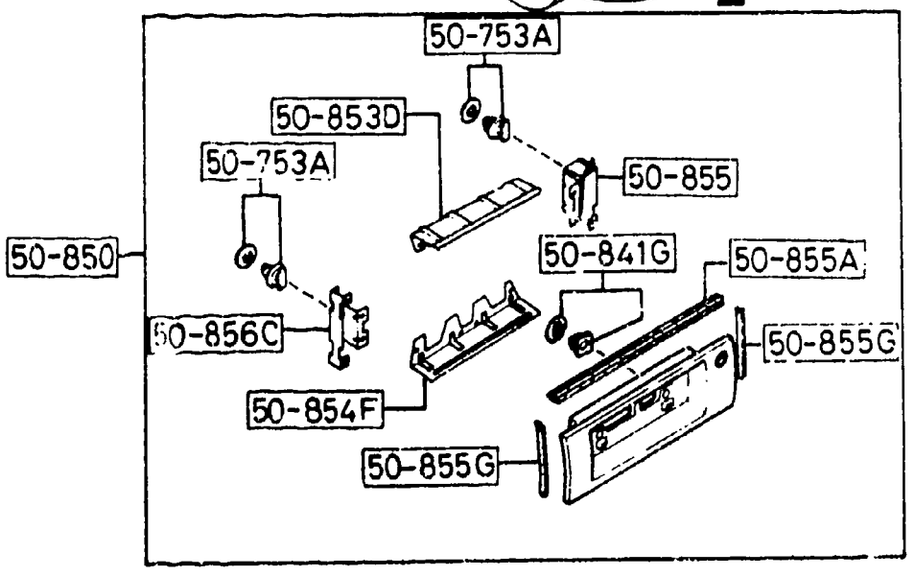


AUFA02

## 5180 -2 * COWL & EXTRACTOR GRILLES

| PART NO. | QTY | MODEL/RESTRICTION | MODEL/RESTRICTION | MODEL/RESTRICTION | FROM-TO |
|---|---|---|---|---|---|
| 50-856C | | BRACKET NO.2,FINISHER-REAR | | | |
| FB67-50-856A | 1 | (CONVERTIBLE) | | | |
| 50-9V2 | | GROMMET,SCREW-ROLL B.GARN | | | |
| B250-50-9V2 | 2 | (CPE) | | | |
| 50-902A | | PLATE | | | |
| FB01-51-922 | 2 | (CPE) | | | |
| 50-950C | | SCREW | | | |
| F044-51-890A | 2 | (CPE) | | | |
| 50-950G | | SCREW,COWL GRILLE | | | |
| FB01-50-795A | 6 | (CONVERTIBLE) | | | |
| | 8 | (CPE) | | | |
| 51-910 | | GRILLE(R),EXTRACTOR | | | |
| FC01-51-910 | 1 | (CPE) | | | |
| 51-910Z | | GRILLE(L),EXTRACTOR | | | |
| FC01-51-930 | 1 | (CPE) | | | |
| 51-917 | | SEAL,RUBBER | | | |
| FC01-51-917 | 2 | (CPE) | | | |
| 51-940B | | CHAMBER(R),EXTRACTOR | | | |
| FB01-51-920A | 1 | (CPE) | | | |
| 51-940X | | CHAMBER(L),EXTRACTOR | | | |
| FB01-51-940A | 1 | (CPE) | | | |

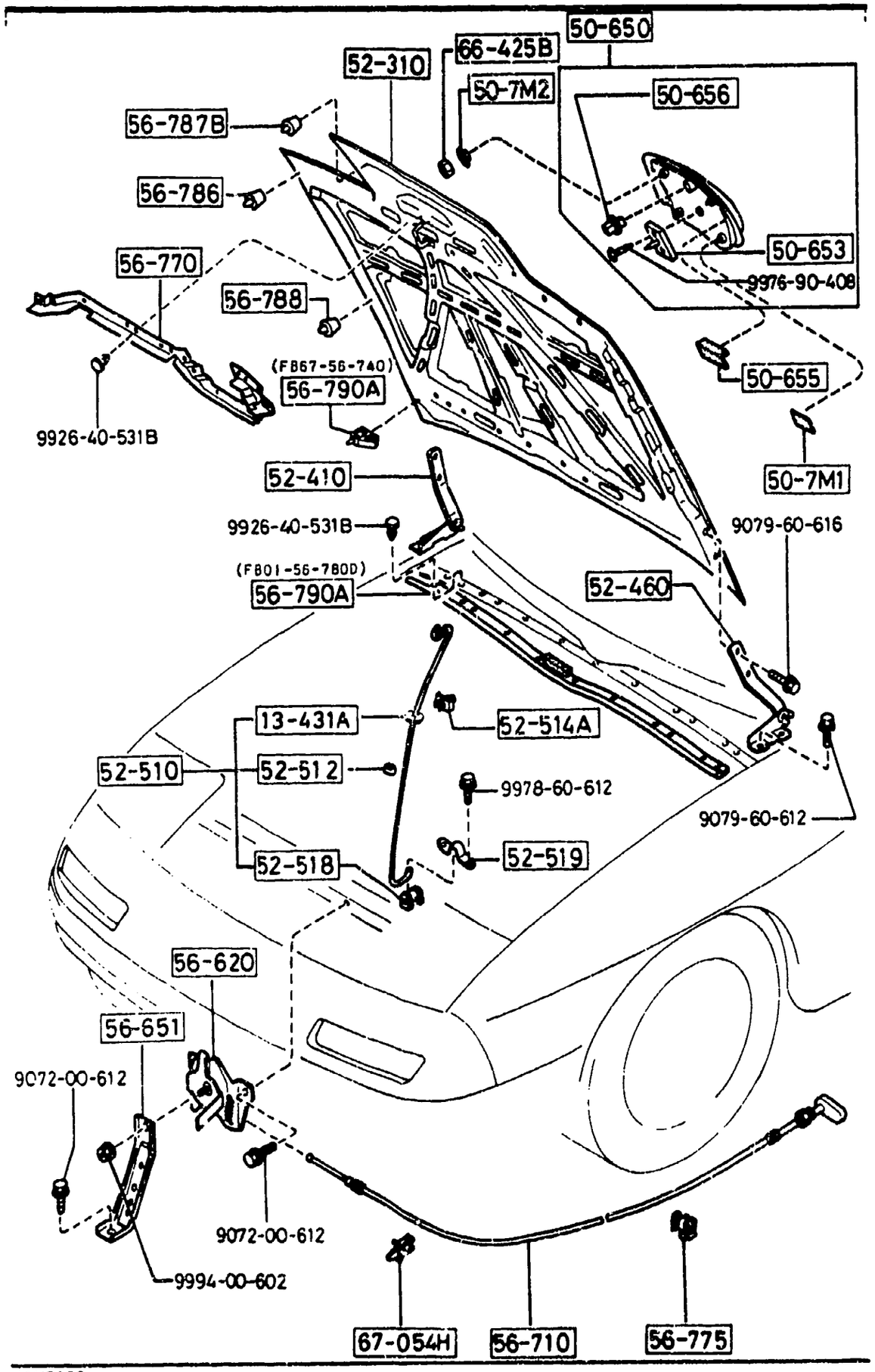


AUFA02



| PART NO. | QTY | MODEL/RESTRICTION | MODEL/RESTRICTION | MODEL/RESTRICTION | FROM-TO |
|---|---|---|---|---|---|
| 13-431A<br>0118-13-431 | 1 | WASHER,RUBBER | | | |
| 50-650<br>F044-50-650B | 1 | SCOOP,BONNET<br>(TURBO) | | | |
| 50-653<br>F044-50-653A | 1 | BRACKET,BONNET BURDGE<br>(TURBO) | | | |
| 50-655<br>F044-50-655A<br>AN(F044-50-655B) | 4 | PROTECTOR,BONNET BURDGE | | | -9101 |
| F044-50-655B | 2 | (TURBO) | | | 9101- |
| 50-656<br>F044-50-656A | 1 | FASTENER,BONNET BURDGE<br>(TURBO) | | | |
| 50-7M1<br>F044-50-7M1<br>AN(F044-50-7M1A) | 2 | PROTECTOR,BONNET BURDGE | | | -9101 |
| F044-50-7M1A | 2 | (TURBO) | | | 9101- |
| 50-7M2<br>F044-50-7M2 | 5 | WASHER,BONNET BURDGE<br>(TURBO) | | | |
| 52-310<br>FB01-52-310H | 1 | BONNET<br>GTU, GXL,<br>(STEEL BONNET)<br>(CPE) | | | |
| FB13-52-310J | 1 | GTUS,<br>(ALUMI.BONNET-W/O BULGE TYPE) | | | |
| F049-52-310N | 1 | TURBO,<br>(ALUMI BONNET-W/BULGE TYPE)<br>(CPE) | | | |
| 52-410<br>FB01-52-410E | 1 | HINGE(R),BONNET<br>GTU, GXL,<br>(STEEL BONNET)<br>(CPE) | | | |
| FB13-52-410E | 1 | CONV, GTUS, TURBO,<br>(ALUMI.BONNET) | | | |

9101 FC3####-700067

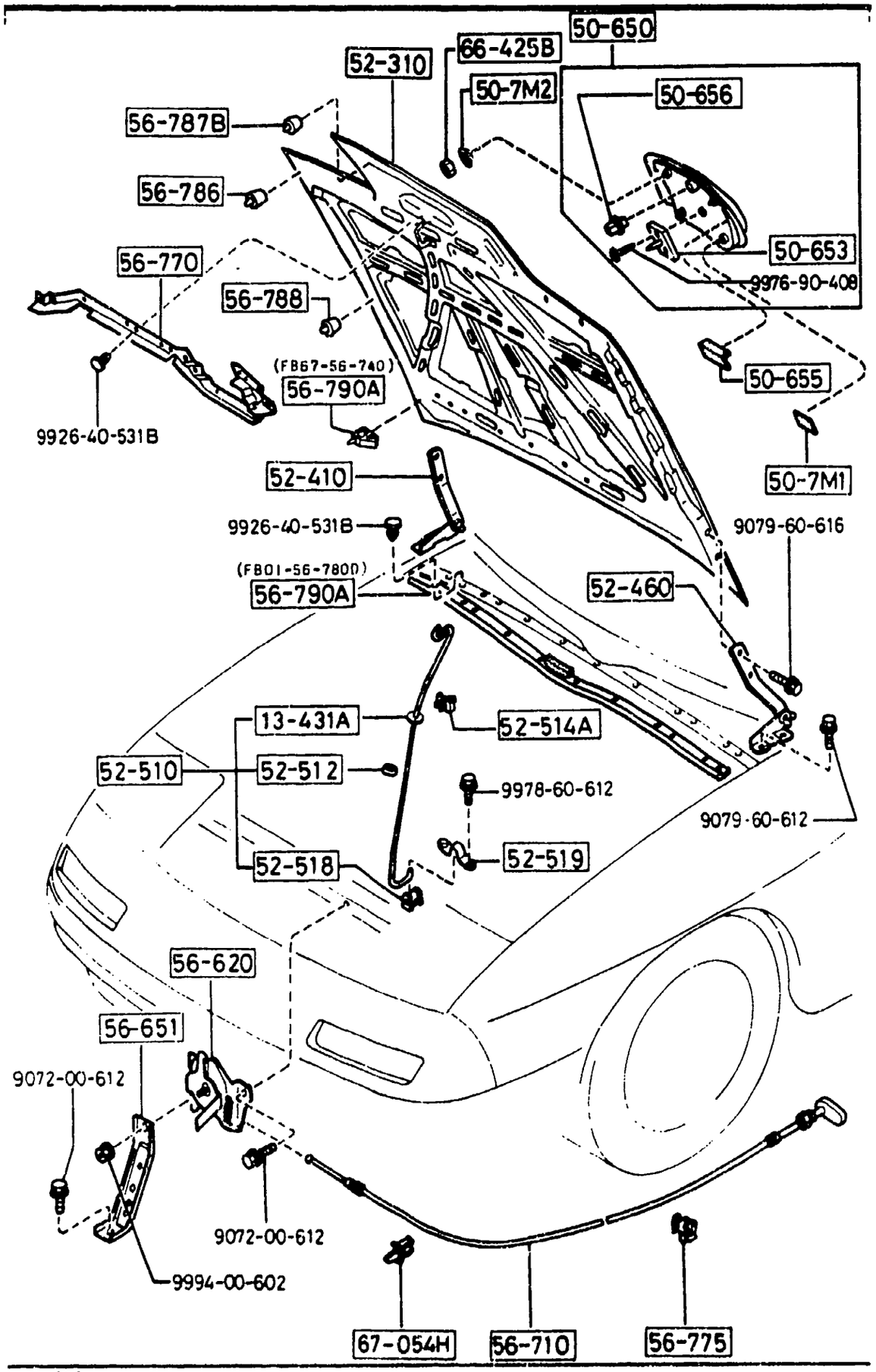


AUFA02



| PART NO. | QTY | MODEL/RESTRICTION | MODEL/RESTRICTION | MODEL/RESTRICTION | FROM-TO |
|---|---|---|---|---|---|
| 52-460 | | HINGE(L),BONNET | | | |
| FB01-52-420E | 1 | GTU, GXL, (STEEL BONNET) (CPE) | | | |
| FB13-52-420E | 1 | CONV, GTUS, TURBO, (ALUMI.BONNET) (CONVERTIBLE) | | | |
| 52-510 | | STAY,BONNET | | | |
| FB01-52-510D | 1 | | | | |
| 52-512 | | SPACER,BONNET STAY | | | |
| FB01-52-512 | 1 | | | | |
| 52-514A | | HOLDER,BONNET STAY-SHROUD | | | |
| FB01-52-514B | 1 | (CPE) | | | |
| FB67-52-514 | 1 | (CONVERTIBLE) | | | |
| 52-518 | | HOLDER,BONNET STAY | | | |
| FB01-52-518 | 1 | | | | |
| 52-519 | | PLATE,SET-HOLDER | | | |
| FB01-52-519A | 1 | | | | |
| 56-620 | | LOCK,BONNET | | | |
| FB01-56-620E | 1 | NON USA, | | | |
| FB02-56-620F AN(FB02-56-620G) | 1 | | | | -0701 |
| FB15-56-620F AN(FB15-56-620G) | 1 | | | | -0701 |
| FB02-56-620G | 1 | GTU, GXL, (STEEL BONNET) ((CPE))(NOR.DIFF) ) (CONVERTIBLE) | | | 0701- |
| FB15-56-620G | 1 | ((CPE))(L.S.DIFF) ) | | | 0701- |
| 56-651 | | STAY,LOCK-BONNET | | | |
| FB01-56-651 | 1 | | | | |
| 56-710 | | WIRE,RELEASE-BONNET | | | |
| FB01-56-710C | 1 | | | | |
| 56-770 | | RUBBER(C),SEAL-BONNET FRT | | | |

0701 FC3####-807120

CAT. AUFA02-06

1992-05

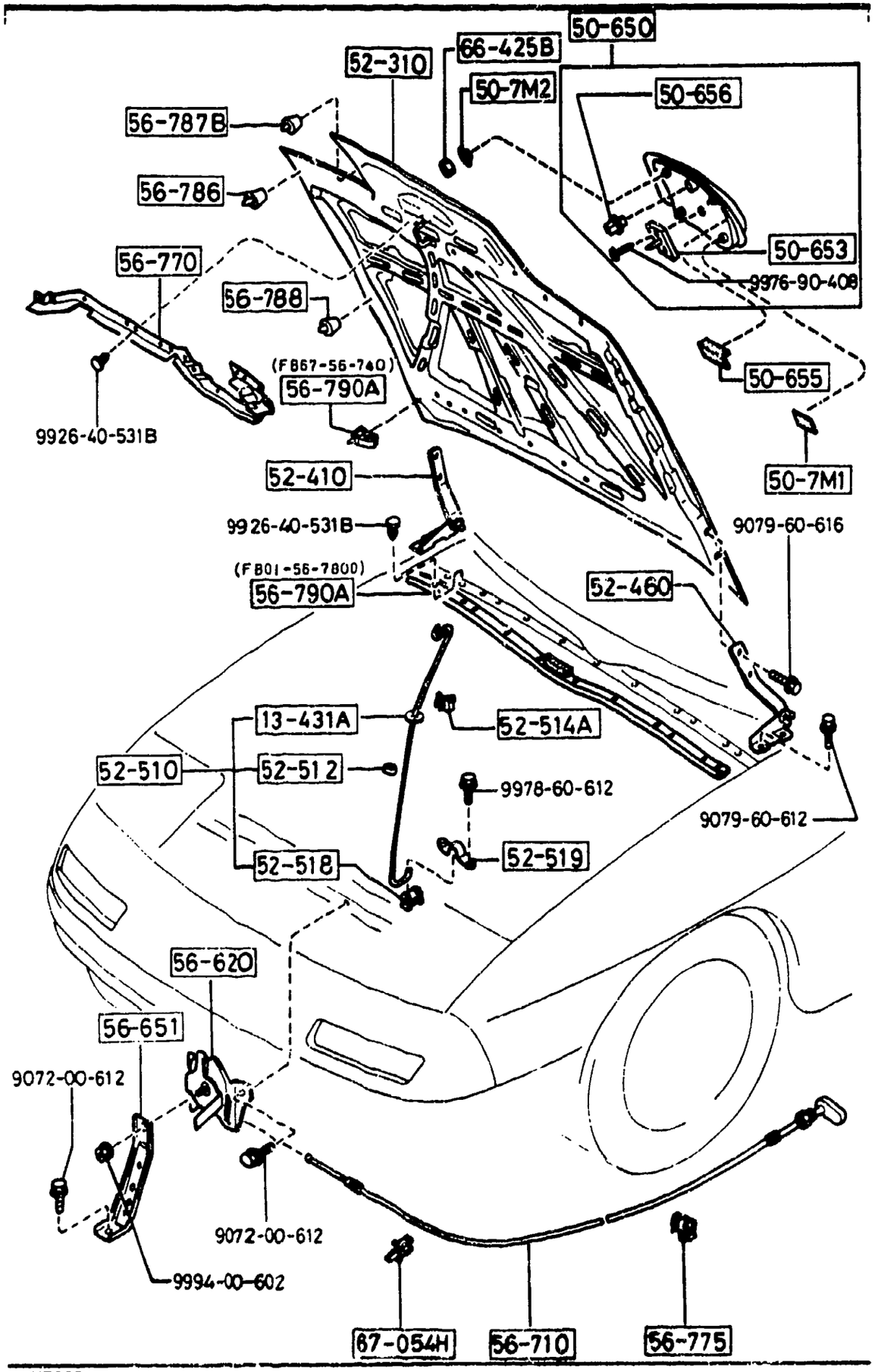


AUFA02



| PART NO. | QTY | MODEL/RESTRICTION | MODEL/RESTRICTION | MODEL/RESTRICTION | FROM-TO |
|---|---|---|---|---|---|
| CONT'D | | | | | |
| FC01-56-770 | 1 | | | | |
| +---------+ | | | | | |
| \| 56-775 \| | | CLIP,WIRE-BONNET | | | |
| +---------+ | | | | | |
| H260-67-519A | 3 | | | | |
| +---------+ | | | | | |
| \| 56-786 \| | | RUBBER(C),CUSHION-BONNET | | | |
| +---------+ | | | | | |
| FB01-56-786A | 2 | | | | |
| +---------+ | | | | | |
| \| 56-787B \| | | RUBBER,CUSHION-BONNET FRT | | | |
| +---------+ | | | | | |
| FB01-56-787A | 2 | | | | |
| +---------+ | | | | | |
| \| 56-788 \| | | RUBBER,CUSHION-BONNET RR | | | |
| +---------+ | | | | | |
| FB01-56-788 | 2 | | | | |
| +---------+ | | | | | |
| \| 56-790A \| | | RUBBER,SEAL-COWL PANEL | | | |
| +---------+ | | | | | |
| FB67-56-740 | 2 | (CONVERTIBLE) | | | |
| FB01-56-780D | 1 | | | | |
| +---------+ | | | | | |
| \| 66-425B \| | | NUT,BONNET BURDGE | | | |
| +---------+ | | | | | |
| F044-50-425 | 5 | (TURBO) | | | |
| +---------+ | | | | | |
| \| 67-054H \| | | CLIP,OPENER CABLE | | | |
| +---------+ | | | | | |
| 8130-56-897 | 1 | | | | |

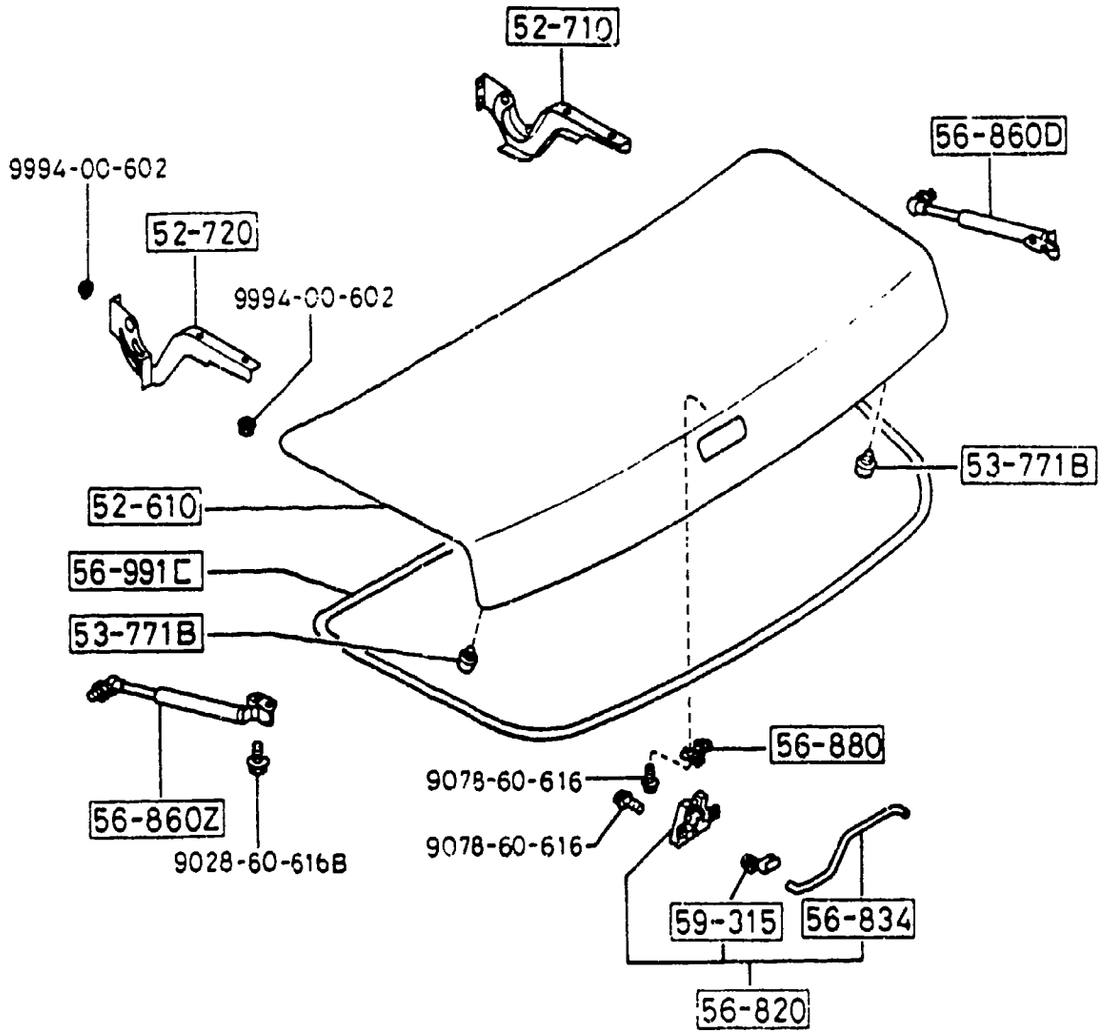


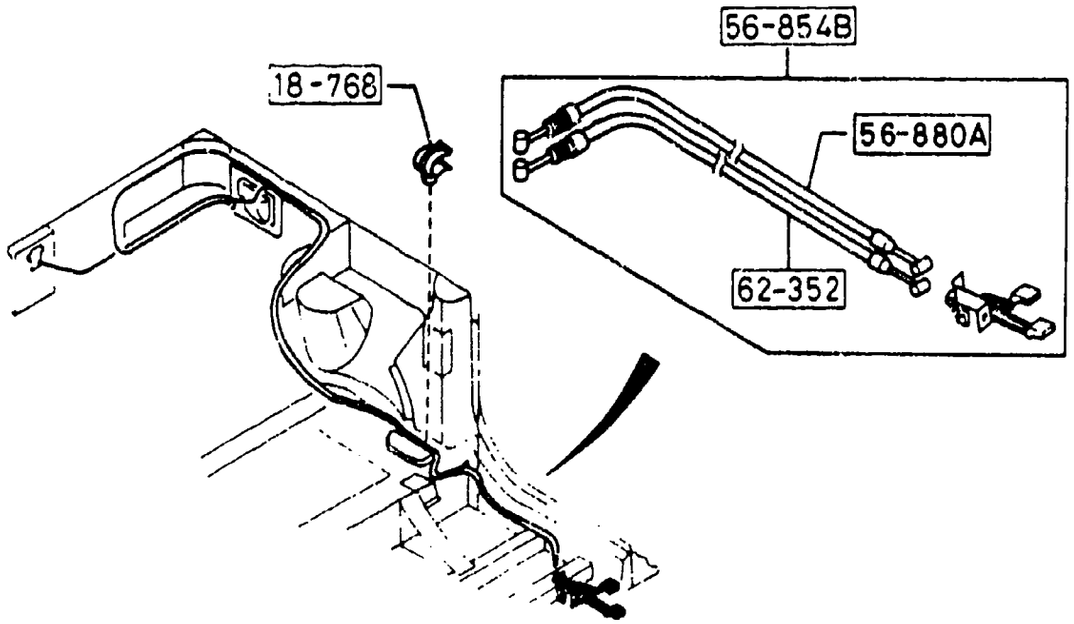


AUFA02



| PART NO. | QTY | MODEL/RESTRICTION | MODEL/RESTRICTION | MODEL/RESTRICTION | FROM-TO |
|---|---|---|---|---|---|
| 18-768 | | CLIP | | | |
| E301-18-768 | 1 | | | | -9726 |
| 52-610 | | LID,TRUNK | | | |
| FB67-52-610A | 1 | | | | |
| 52-710 | | HINGE(R),TRUNK LID | | | |
| FB67-52-710A | 1 | | | | |
| 52-720 | | HINGE(L),TRUNK LID | | | |
| FB67-52-720A | 1 | | | | |
| 53-771B | | RUBBER,CUSHION | | | |
| FB67-56-802 | 2 | | | | |
| 56-820 | | LOCK,LID | | | |
| FB67-56-820 | 1 | | | | |
| 56-834 | | ROD,TRUNK OPENING | | | |
| FB67-56-835 | 1 | | | | |
| 56-854B | | OPENER,T/LID & F/LID | | | |
| FB67-56-920D | 1 | | | | -0315 |
| A (FB67-56-920F) | | | | | |
| FB67-56-920F | 1 | | | | 0315-0417 |
| A (FB67-56-920G) | | | | | |
| FB67-56-920G | 1 | | | | 0417- |
| 56-860D | | STAY(R),DAMPER-TRUNK LID | | | |
| 8BF1-56-860 | 1 | | | | |
| 56-860Z | | STAY(L),DAMPER-TRUNK LID | | | |
| 8BF1-56-870 | 1 | | | | |
| 56-880 | | STRIKER,LID | | | |
| FB67-56-840 | 1 | | | | |
| 56-880A | | CABLE,F/LID OPENER | | | |
| FB67-56-940D | 1 | | | | -0315 |
| A (FB67-56-940E) | | | | | |
| FB67-56-940E | 1 | | | | 0315-0417 |
| A (FB67-56-940F) | | | | | |

9726 FC3####-800035
0315 FC3####-806538
0417 FC3####-806621

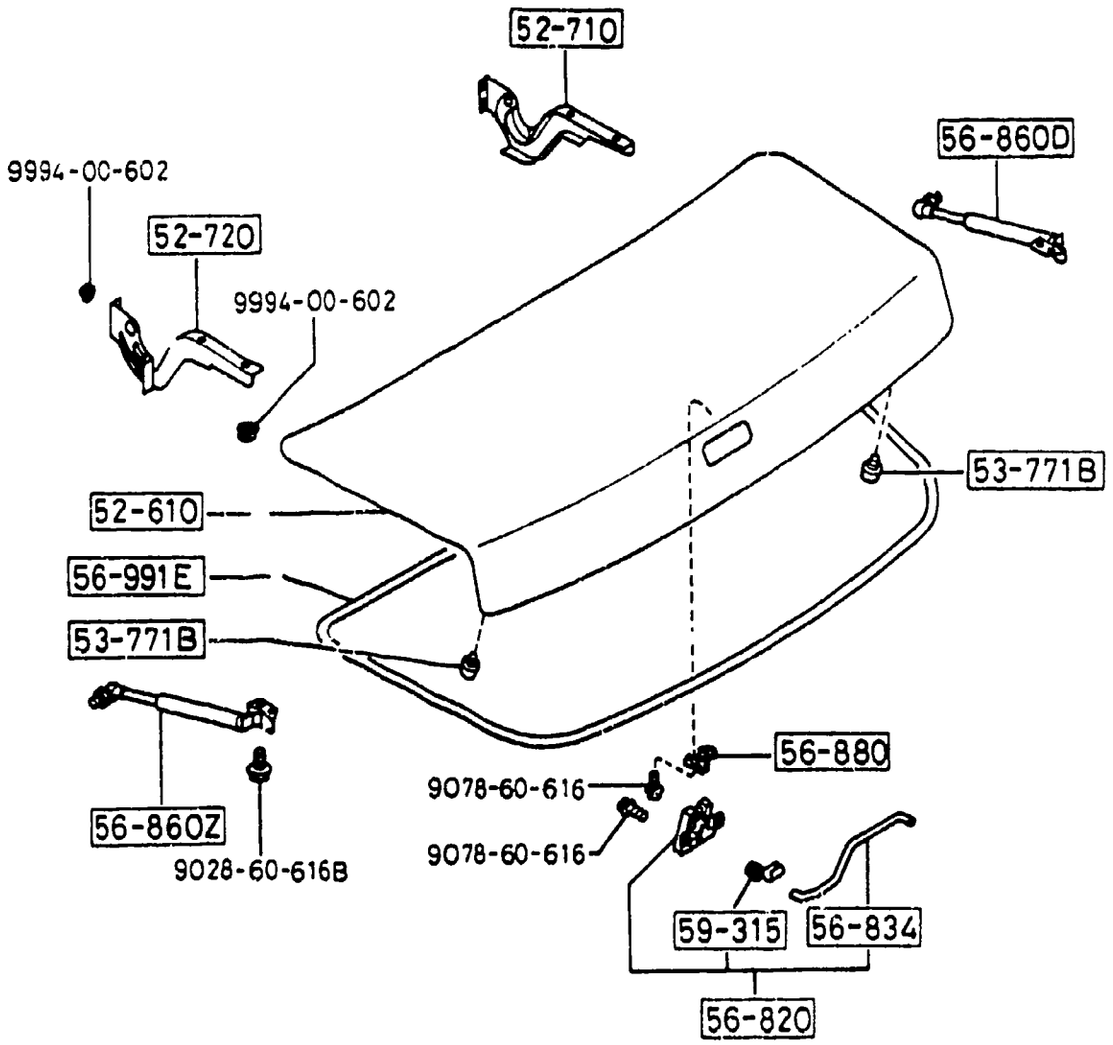


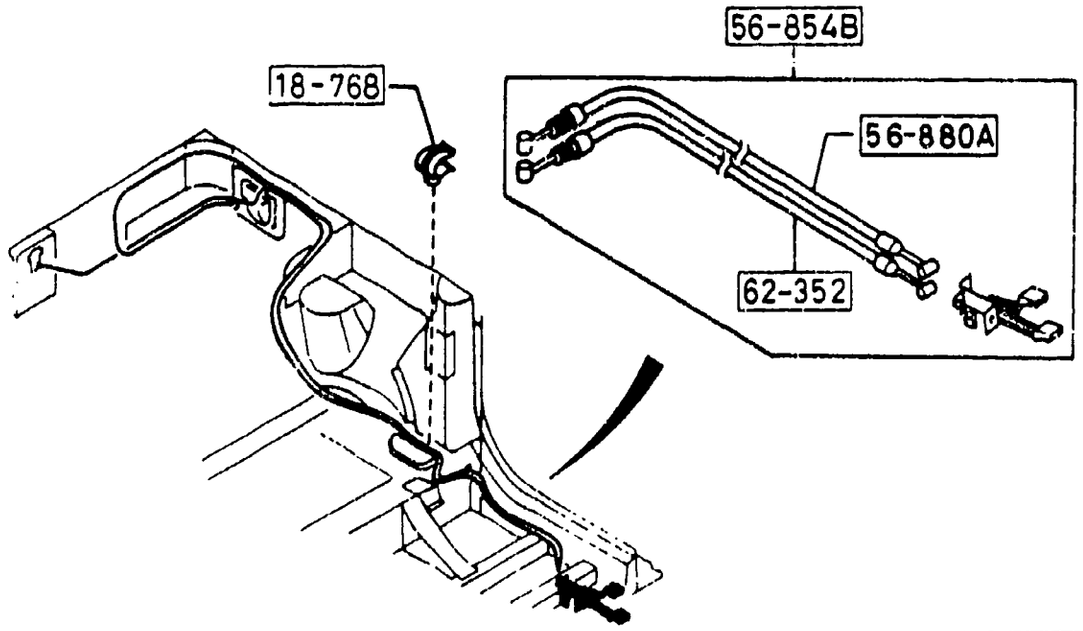






| PART NO. | QTY | MODEL/RESTRICTION | MODEL/RESTRICTION | MODEL/RESTRICTION | FROM-TO |
|---|---|---|---|---|---|
| CONT'D | | | | | |
| FB67-56-940F | 1 | | | | 0417- |
| 56-991E | | WEATHERSTRIP,LID | | | |
| FB67-56-952 | 1 | | | | |
| 59-315 | | CLIP | | | |
| G030-59-315 | 1 | | | | |
| 62-352 | | CABLE,OPENER | | | |
| FB67-56-930D A (FB67-56-930F) | 1 | | | | -0315 |
| FB67-56-930F | 1 | | | | 0315- |

0315 FC3MMM-806538
0417 FC3MMM-806621

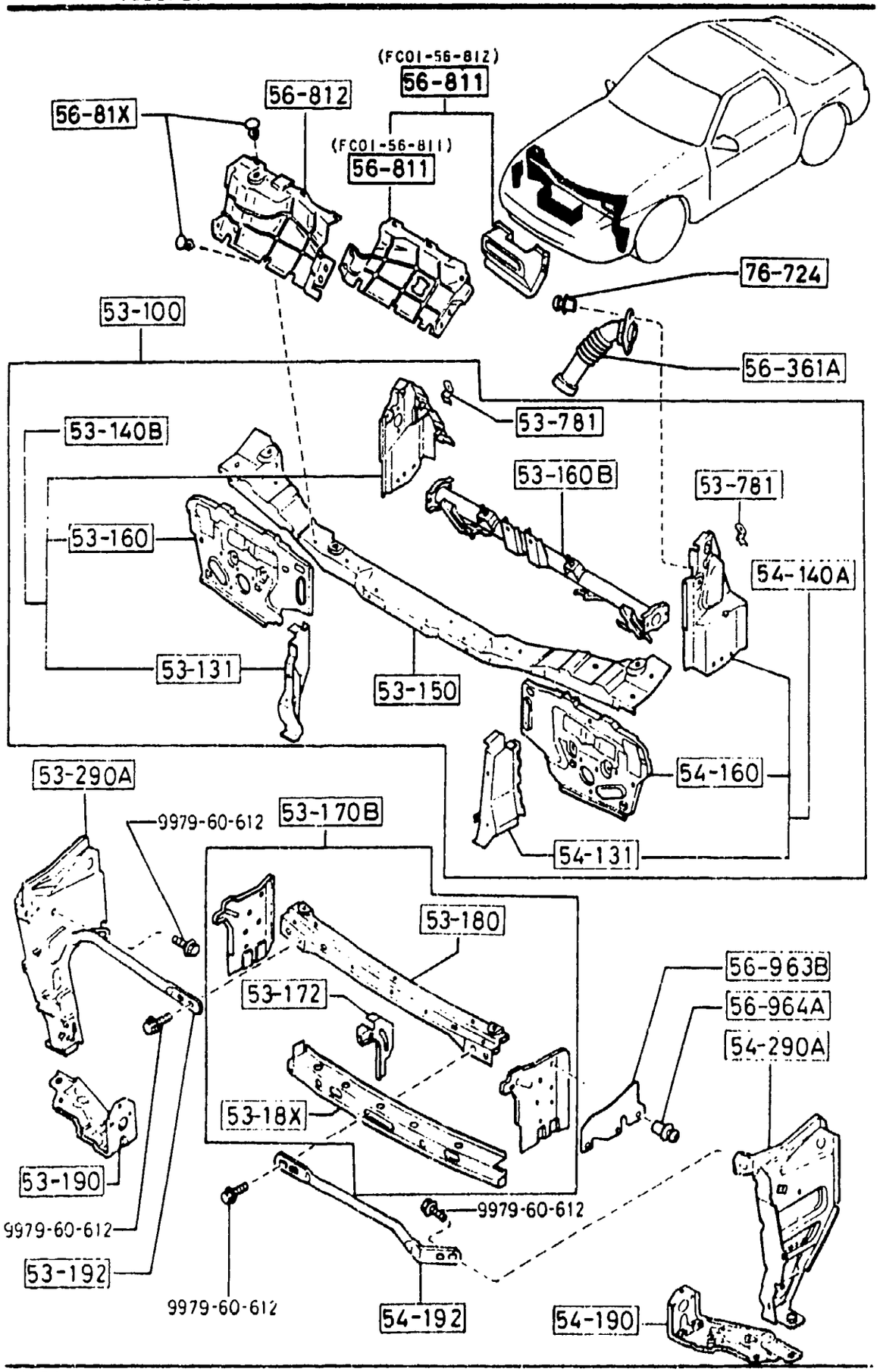


AUFA02



| PART NO. | QTY | MODEL/RESTRICTION | MODEL/RESTRICTION | MODEL/RESTRICTION | FROM-TO |
|---|---|---|---|---|---|
| 53-100 | | PANEL,RAD.SHROUD | | | |
| FB01-53-100M A (FB01-53-100N) | 1 | | | | -9101 |
| FB01-53-100N | 1 | | | | 9101- |
| 53-131 | | REINF.(R),RAD. SHROUD | | | |
| FB01-53-131A | 1 | | | | |
| 53-140B | | PANEL(R),SHROUD-SIDE | | | |
| FB01-53-12XC A (FB01-53-12XD) | 1 | | | | -9101 |
| FB01-53-12XD | 1 | | | | 9101- |
| 53-150 | | PLATE,SHROUD-UPPER | | | |
| FB01-53-150D | 1 | | | | |
| 53-160 | | PANEL(R),SHROUD | | | |
| FB01-53-120B A (FB01-53-120C) | 1 | | | | -9101 |
| FB01-53-120C | 1 | | | | 9101- |
| 53-160B | | MEMBER,CROSS | | | |
| FB01-53-160 | 1 | | | | |
| 53-170B | | PLATE,SET-FASCIA | | | |
| FC01-53-170 | 1 | | | | |
| 53-172 | | STAY,SET PLATE-FASCIA | | | |
| FB01-53-172 | 1 | | | | |
| 53-18X | | BRACKET,RELAY-SET PLATE | | | |
| FC01-53-18X | 1 | | | | |
| 53-180 | | PLATE(UP.),SET-FASCIA | | | |
| FB01-53-180C A (FC66-53-180) | 1 | | | | -9801 |
| FC66-53-180 | 1 | | | | 9801- |
| 53-190 | | STAY(R),FENDER-LOWER | | | |
| FC01-53-190 | 1 | | | | |

9101 FC3***-700067
9801 FC3***-800894

CAT. AUFA02-06

1992-05

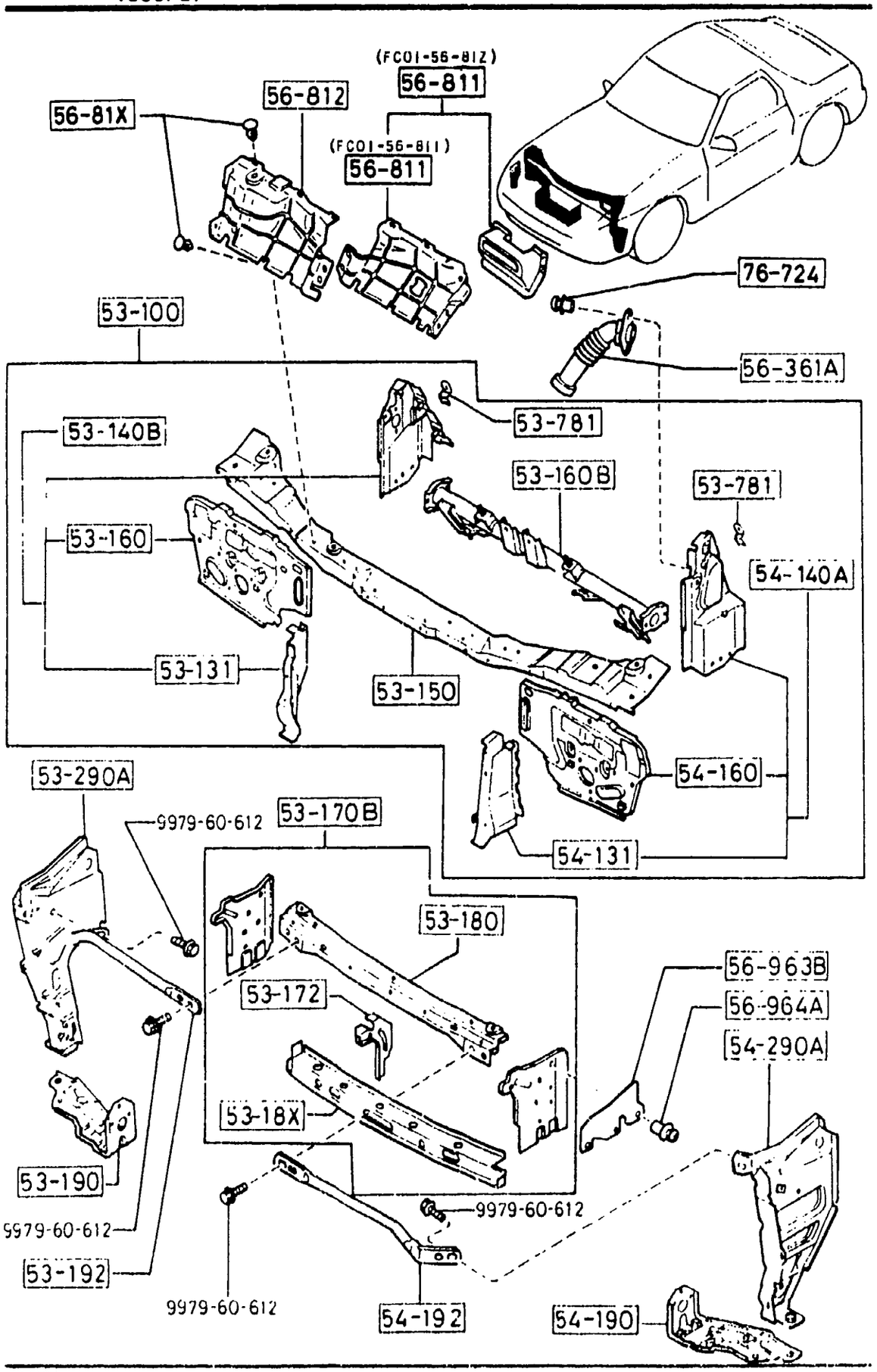




| PART NO. | QTY | MODEL/RESTRICTION | MODEL/RESTRICTION | MODEL/RESTRICTION | FROM-TO |
|---|---|---|---|---|---|
| 53-192 | | STAY(R),FENDER-UPPER | | | |
| FB01-53-192 | 1 | | | | |
| 53-290A | | BRACKET(R),FENDER | | | |
| FB01-53-110A | 1 | | | | |
| 53-781 | | BRACKET,GRILLE-C | | | |
| 0305-53-781A | 2 | | | | |
| 54-131 | | REINF.(L),RAD. SHROUD | | | |
| FB01-54-131A | 1 | | | | |
| 54-140A | | PANEL(L),SHROUD-SIDE | | | |
| FB01-54-12XD A (FB01-54-12XE) | 1 | | | | -9101 |
| FB01-54-12XE | 1 | | | | 9101- |
| 54-160 | | PANEL(L),SHROUD | | | |
| FB01-54-120C A (FB01-54-120D) | 1 | | | | -9101 |
| FB01-54-120D | 1 | | | | 9101- |
| 54-190 | | STAY(L),FENDER-LOWER | | | |
| FC01-54-190 | 1 | | | | |
| 54-192 | | STAY(L),FENDER-UPPER | | | |
| FB01-54-192 | 1 | | | | |
| 54-290A | | BRACKET(L),FENDER | | | |
| FB01-54-110B | 1 | | | | |
| 56-361A | | DUCT,AIR-RADIATOR SHROUD | | | |
| FB01-56-361A | 1 | | | | |
| 56-81X | | FASTENER,DUCT PANEL | | | |
| FB01-56-81X | 10 | | | | |
| 56-811 | | PANEL(L),DUCT-RAD. SHROUD | | | |
| FC01-56-81Z | 1 | | | | |
| FC01-56-811 | 1 | | | | |

9101 FC3####-700067

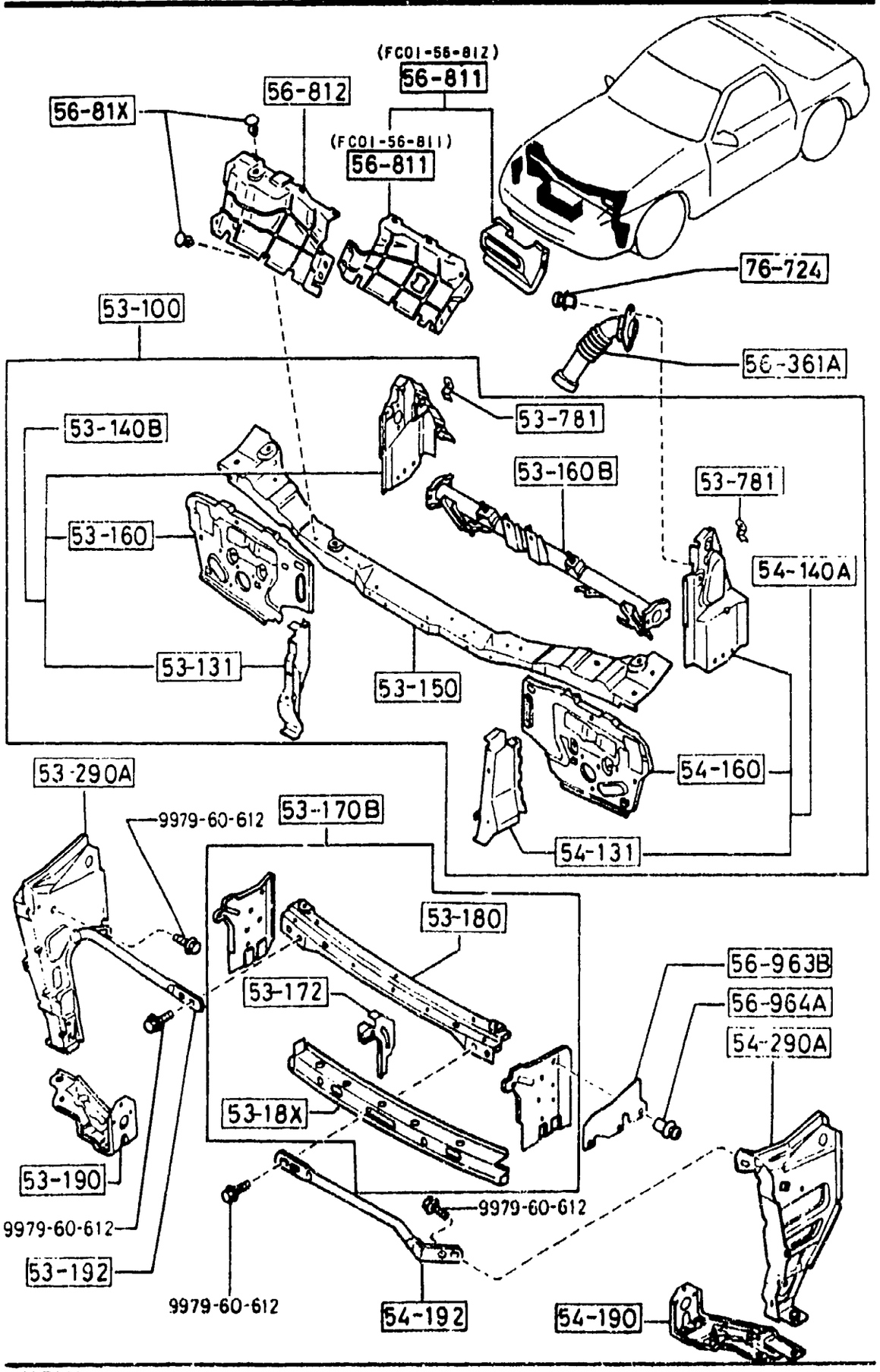


AUFA92

5310 -3 * BODY PANELS (FRONT)
(COUPE)

| PART NO. | QTY | MODEL/RESTRICTION | MODEL/RESTRICTION | MODEL/RESTRICTION | FROM-TO |
|---|---|---|---|---|---|
| 56-812 | | PANEL(R),DUCT-RAD. SHROUD | | | |
| FB01-56-812 | 1 | | | | |
| 56-963B | | PLATE,SEAL-RAD. SHROUD | | | |
| FB01-56-963 | 1 | | | | |
| 56-964A | | RIVET,SEAL PLATE-SHROUD | | | |
| FB01-56-964 | 3 | | | | |
| 76-724 | | RIVET | | | |
| B092-51-833 | 2 | | | | |

| LO.NO | SEC.NO | SECTION NAME |
|---|---|---|
| 3-C03 | 0900 | KEY SETS |
| 3-F03 | 5000 | FRONT BUMPER |
| 3-H03 | 5010 | REAR BUMPER |
| 3-J03 | 5020 | HEAD LAMP CLEANER |
| 3-L03 | 5030 | WINDOW MOULDINGS |
| 3-M03 | 5040 | BODY MOULDINGS (COUPE) |
| 3-E04 | 5060 | SIDE PROTECTORS |
| 3-I04 | 5100 | HEAD LAMPS |
| 3-J04 | 5103 | HEAD LAMP RETRACTORS |
| 3-N04 | 5105 | FRONT COMBINATION LAMPS |
| 3-G05 | 5110 | REAR COMBINATION LAMPS |
| 3-K05 | 5120 | LICENSE LAMPS |
| 3-M05 | 5125 | INTERIOR LAMPS |
| 3-N05 | 5130 | OVERHEAD CONSOLE |
| 3-C06 | 5170 | ORNAMENTS |
| 3-D06 | 5180 | COWL & EXTRACTOR GRILLES |
| 3-G06 | 5230 | BONNET |
| 3-J06 | 5260 | TRUNK LID (CONVERTIBLE) |
| 3-L06 | 5310 | BODY PANELS (FRONT) (COUPE) |
| 3-C07 | 5310 A | BODY PANELS (FRONT) (CONVERTIBLE) |
| 3-F07 | 5320 | BODY PANELS (FENDER & WHEEL APRON) |
| 3-K07 | 5330 | BODY PANELS (DASH & COWL PANEL) |
| 3-L07 | 5340 | BODY PANELS (SIDE) (COUPE) |
| 3-E08 | 5340A | BODY PANELS (SIDE) (CONVERTIBLE) |
| 3-K08 | 5360 | BODY PANELS (ROOF) (W/O SUN ROOF) |
| 3-L08 | 5360 A | BODY PANELS (ROOF) (SUN ROOF) |
| 3-M08 | 5370 | BODY PANELS (FLOOR) (COUPE) |
| 3-D09 | 5370 A | BODY PANELS (FLOOR) (CONVERTIBLE) |
| 3-H09 | 5380 | FLOOR ATTACHMENTS (HOLE COVERS) |
| 3-J09 | 5390 | FLOOR ATTACHMENTS |
| 3-C10 | 5500 | DASHBOARD EQUIPMENTS |
| 3-F10 | 5520 | METER HOOD |
| 3-G10 | 5530 | SPEEDOMETER CABLE |
| 3-H10 | 5540 | METER COMPONENTS |
| 3-J10 | 5560 | DASHBOARD & RELATED PARTS |
| 3-E11 | 5570 | CONSOLE |
| 3-H11 | 5580 | VENTILATOR |
| 3-J11 | 5700 | FRONT SEATS (COUPE) |
| 3-E13 | 5700A | FRONT SEATS (CONVERTIBLE) |
| 3-K13 | 5750 | REAR SEATS (COUPE) |
| 3-M13 | 5790 | SEAT BELTS (COUPE) |
| 3-C14 | 5790A | SEAT BELTS (CONVERTIBLE) |
| 3-D14 | 5800 | FRONT DOORS (COUPE) |
| 3-G14 | 5800A | FRONT DOORS (CONVERTIBLE) |
| 3-K14 | 5830 | FRONT DOOR MECHANISMS (COUPE) |
| 3-F15 | 5830A | FRONT DOOR MECHANISMS (CONVERTIBLE) |
| 3-J15 | 5840 | FRONT DOOR TRIMS & RELATED PARTS (COUPE) |
| 3-H16 | 5840A | FRONT DOOR TRIMS & RELATED PARTS (CONVERTIBLE) |

## 5310 A BODY PANELS (FRONT) (CONVERTIBLE)

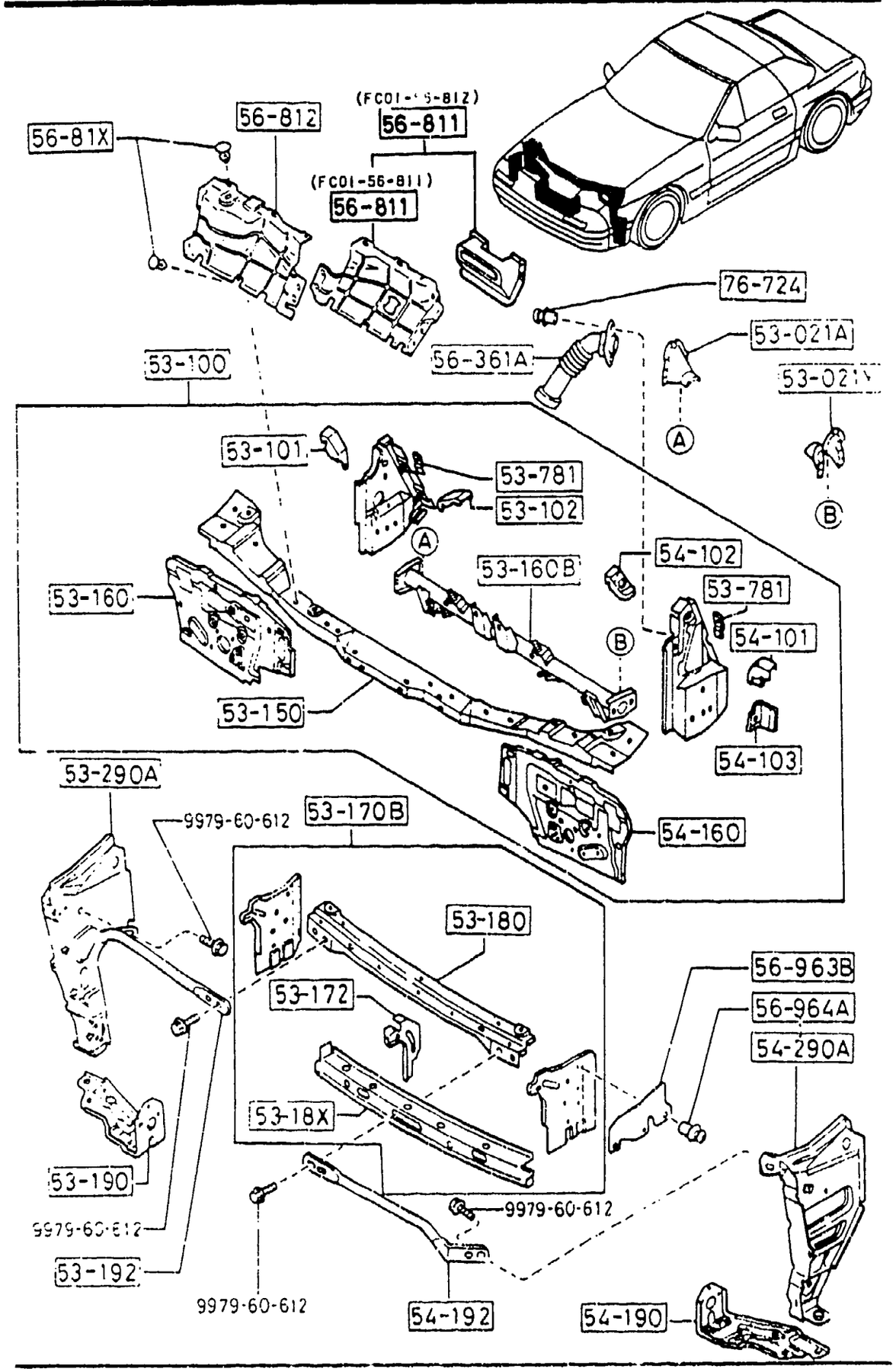


AUFA02

## 5310 A-1 BODY PANELS (FRONT) (CONVERTIBLE)

| PART NO. | QTY | MODEL/RESTRICTION | MODEL/RESTRICTION | MODEL/RESTRICTION | FROM-TO |
|---|---|---|---|---|---|
| 53-021A | | GUSSET(R),CROSSMEMBER NO1 | | | |
| FB67-53-021 | 1 | | | | |
| 53-021Y | | GUSSET(L),CROSSMEMBER NO1 | | | |
| FB67-54-021 | 1 | | | | |
| 53-100 | | PANEL,RAD.SHROUD | | | |
| FB67-53-100C A (FB67-53-100D) | 1 | | | | -9101 |
| FB67-53-100D A (FC66-53-100 ) | 1 | | | | 9101-9801 |
| FC66-53-100 | 1 | | | | 9801- |
| 53-101 | | REINF.'A'(R),RAD. SHROUD | | | |
| FB67-53-101 | 1 | | | | |
| 53-102 | | REINF.'B'(R),RAD. SHROUD | | | |
| FB67-53-102 | 1 | | | | |
| 53-150 | | PLATE,SHROUD-UPPER | | | |
| FB67-53-150 A (FC66-53-150 ) | 1 | | | | -9801 |
| FC66-53-150 | 1 | | | | 9801- |
| 53-160 | | PANEL(R),SHROUD | | | |
| FB67-53-12XC A (FB67-53-12XD) | 1 | | | | -9101 |
| FB67-53-12XD | 1 | | | | 9101- |
| 53-160B | | MEMBER,CROSS | | | |
| FB67-53-160 | 1 | | | | |
| 53-170B | | PLATE,SET-FASCIA | | | |
| FC33-53-170 A (FC66-53-170 ) | 1 | | | | -9801 |
| FC66-53-170 | 1 | | | | 9801- |
| 53-172 | | STAY,SET PLATE-FASCIA | | | |
| FB01-53-172 | 1 | | | | |
| 53-18X | | BRACKET,RELAY-SET PLATE | | | |
| FC01-53-18X | 1 | | | | |

9101 FC3***-700067
9801 FC3***-800894

CAT. AUFA02-06

1992-05

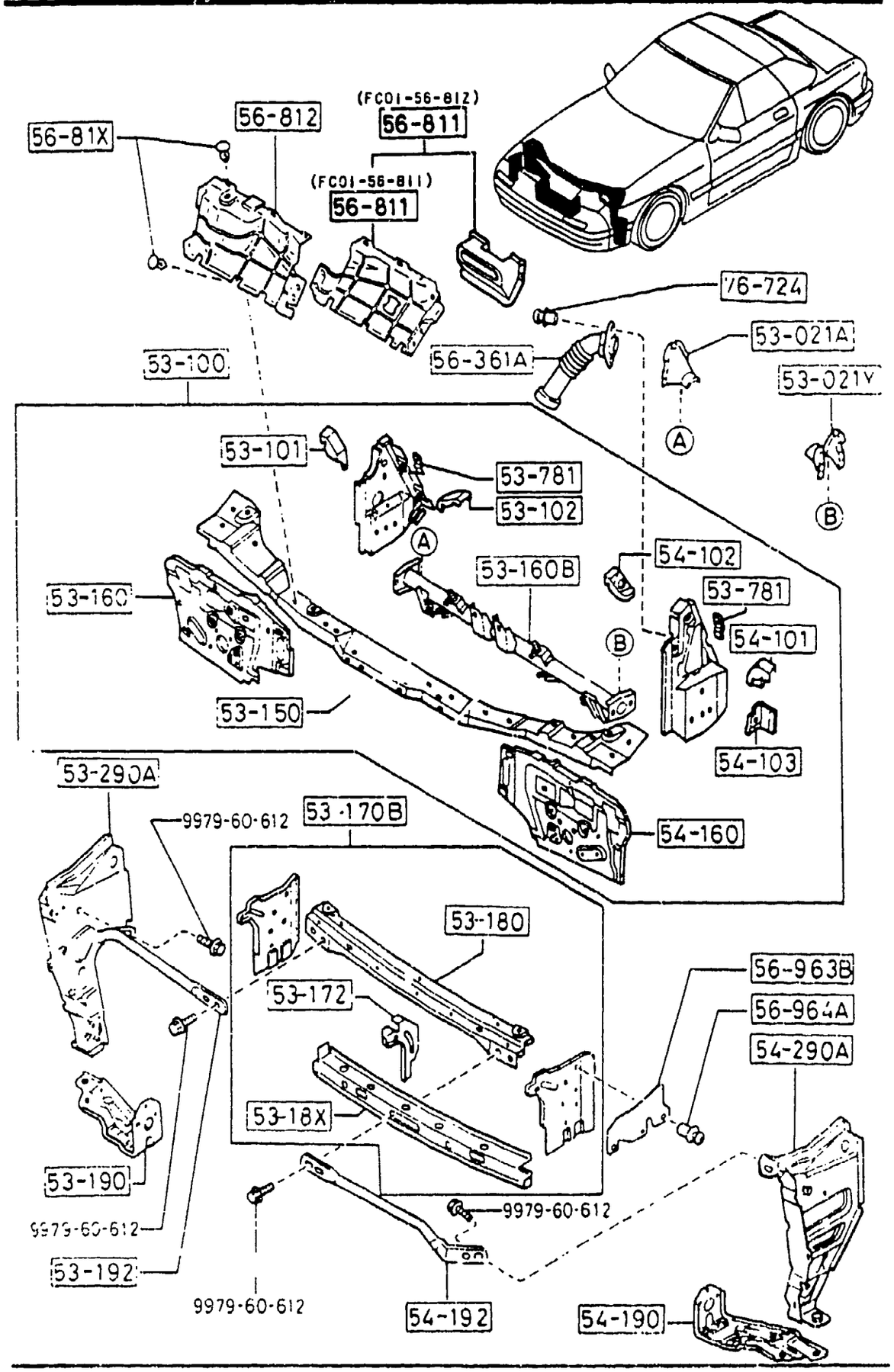






| PART NO. | QTY | MODEL/RESTRICTION | MODEL/RESTRICTION | MODEL/RESTRICTION | FROM-TO |
|---|---|---|---|---|---|
| 53-180 | | PLATE(UP.),SET-FASCIA | | | |
| FB01-53-180C | 1 | | | | -9801 |
| A (FC66-53-180 ) | | | | | |
| FC66-53-180 | 1 | | | | 9801- |
| 53-190 | | STAY(R),FENDER-LOWER | | | |
| FC01-53-190 | 1 | | | | |
| 53-192 | | STAY(R),FENDER-UPPER | | | |
| FB01-53-192 | 1 | | | | |
| 53-290A | | BRACKET(R),FENDER | | | |
| FB01-53-110A | 1 | | | | |
| 53-781 | | BRACKET,GRILLE-C | | | |
| 0305-53-781A | 2 | | | | |
| 54-101 | | REINF.'A'(L),RAD. SHROUD | | | |
| FB67-54-101 | 1 | | | | |
| 54-102 | | REINF.'B'(L),RAD. SHROUD | | | |
| FB67-54-102 | 1 | | | | |
| 54-103 | | REINF.'C'(L),RAD. SHROUD | | | |
| FB67-54-103 | 1 | | | | |
| 54-160 | | PANEL(L),SHROUD | | | |
| FB67-54-12XC | 1 | | | | -9101 |
| A (FB67-54-12XD) | | | | | |
| FB67-54-12XD | 1 | | | | 9101- |
| 54-190 | | STAY(L),FENDER-LOWER | | | |
| FC01-54-190 | 1 | | | | |
| 54-192 | | STAY(L),FENDER-UPPER | | | |
| FB01-54-192 | 1 | | | | |
| 54-290A | | BRACKET(L),FENDER | | | |
| FB01-54-110B | 1 | | | | |
| 56-361A | | DUCT,AIR-RADIATOR SHROUD | | | |

9101 FC3###-700067
9801 FC3###-800894



3-D 7

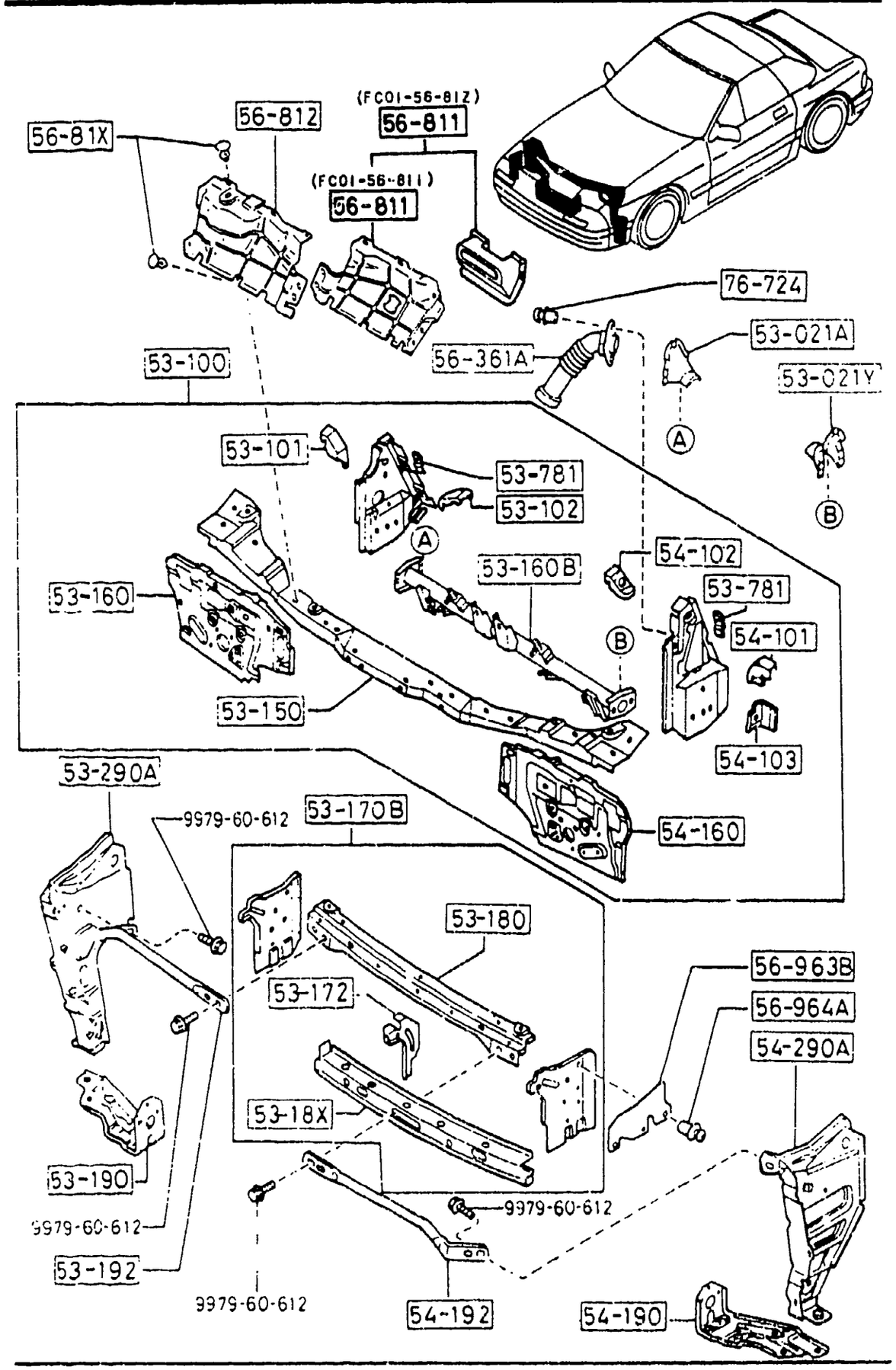


AUFA02



| PART NO. | QTY | MODEL/RESTRICTION | MODEL/RESTRICTION | MODEL/RESTRICTION | FROM-TO |
|---|---|---|---|---|---|
| CONT'D | | | | | |
| FB01-56-361A | 1 | | | | |
| 56-81X | | FASTENER,DUCT PANEL | | | |
| FB01-56-81X | 10 | | | | |
| 56-811 | | PANEL(L),DUCT-RAD. SHROUD | | | |
| FC01-56-81Z | 1 | | | | |
| FC01-56-811 | 1 | | | | |
| 56-812 | | PANEL(R),DUCT-RAD. SHROUD | | | |
| FB01-56-812 | 1 | | | | |
| 56-963B | | PLATE,SEAL-RAD. SHROUD | | | |
| FB01-56-963 | 1 | | | | |
| 56-964A | | RIVET,SEAL PLATE-SHROUD | | | |
| FB01-56-964 | 3 | | | | |
| 76-724 | | RIVET | | | |
| B092-51-833 | 2 | | | | |

CAT. AUFA02-06

1992-05

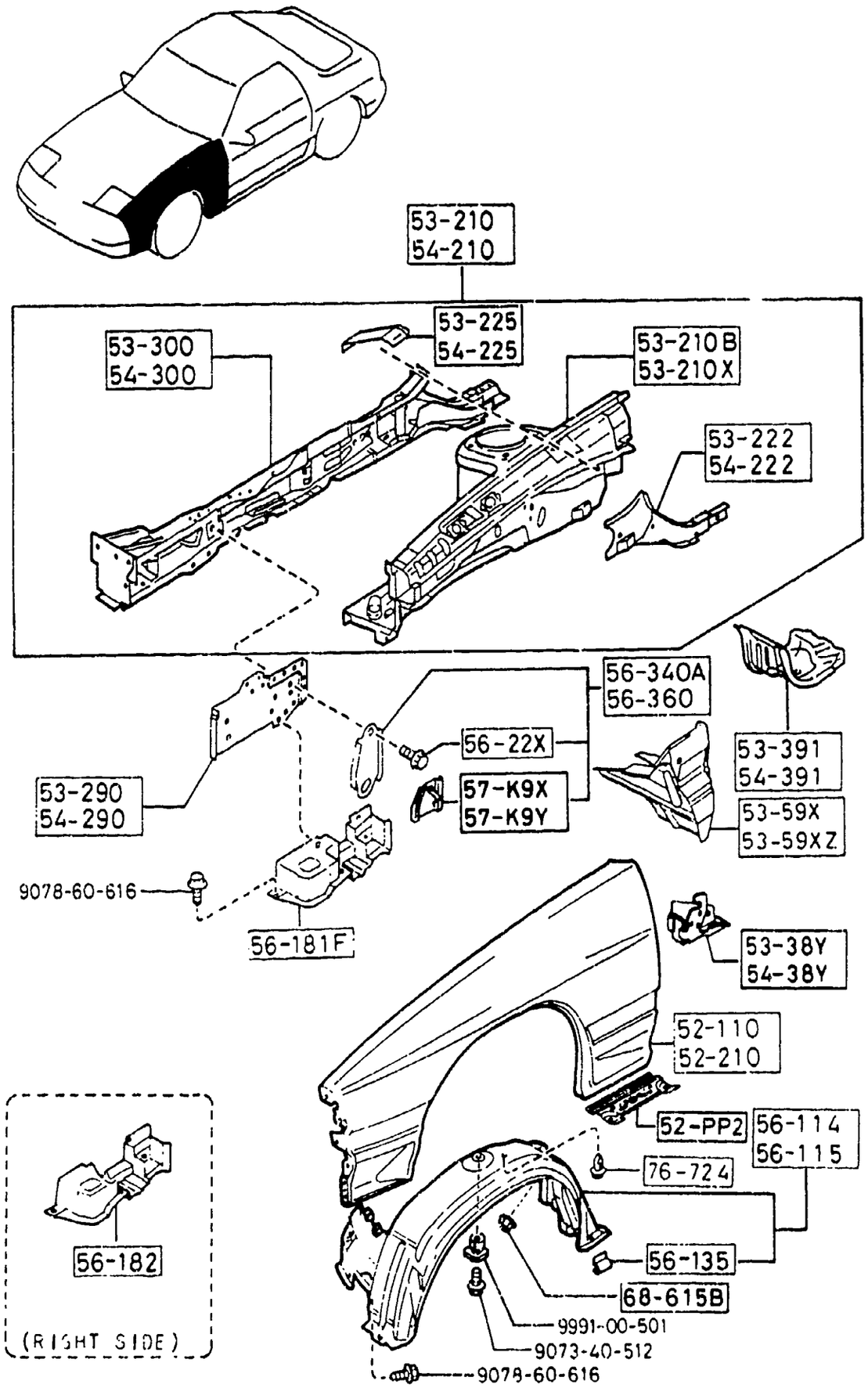






| PART NO. | QTY | MODEL/RESTRICTION | MODEL/RESTRICTION | MODEL/RESTRICTION | FROM-TO |
|---|---|---|---|---|---|
| 52-PP2 | | BRACKET,SIDE STEP-F. FENDER | | | |
| FC17-52-PP2 | 2 | | | | |
| 52-110 | | PANEL(R),FENDER-FRT. | | | |
| FC01-52-111 | 1 | (CONVERTIBLE) ((CPE))(W/O TURBO) ) | | | |
| FC17-52-111 | 1 | ((CPE))(TURBO) ) | | | |
| 52-210 | | PANEL(L),FENDER-FRT. | | | |
| FC01-52-211 | 1 | (CONVERTIBLE) ((CPE))(W/O TURBO) ) | | | |
| FC17-52-211 | 1 | ((CPE))(TURBO) ) | | | |
| 53-210 | | PANEL(R),WHEEL APRON | | | |
| FC66-53-200 | 1 | (CONVERTIBLE) | | | |
| FC01-53-200 | 1 | ((CPE))(W/O TURBO) ) | | | -9201 |
| FC33-53-200 | 1 | ((CONVERTIBLE))(W/O AIR BAG) ) | | | -9201 |
| FC49-53-200 | 1 | ((CPE))(TURBO) ) | | | -9201 |
| FB01-53-200E C (FB01-53-200F) | 1 | | | | 9201-9823 |
| FB34-53-200E C (FB34-53-200F) | 1 | | | | 9201-9823 |
| FB67-53-200D | 1 | ((CONVERTIBLE))(W/O AIR BAG) ) | | | 9201-9823 |
| FB01-53-200F | 1 | ((CPE))(W/O TURBO) ) | | | 9823- |
| FB34-53-200F | 1 | ((CPE))(TURBO) ) | | | 9823- |
| 53-210B | | PANEL(R),WHEEL APRON | | | |
| FC01-53-210 | 1 | ((CPE))(W/O TURBO) ) | | | -9201 |
| FC33-53-210 | 1 | (CONVERTIBLE) | | | -9201 |
| FC49-53-210 | 1 | ((CPE))(TURBO) ) | | | -9201 |
| FB67-53-210C A (FB67-53-210D) | 1 | | | | 9201-9801 |
| FB01-53-210H C (FB01-53-210J) | 1 | | | | 9201-9823 |
| FB34-53-210G C (FB34-53-210H) | 1 | | | | 9201-9823 |
| FB67-53-210D | 1 | (CONVERTIBLE) | | | 9801-9823 |
| FB01-53-210J | 1 | ((CPE))(W/O TURBO) ) | | | 9823- |
| FB34-53-210H | 1 | ((CPE))(TURBO) ) | | | 9823- |

FB01-53-200E
FC46-51-1208
C FB01-53-200F
FB34-53-200E
FC46-51-120B
C FB34-53-200F
FB01-53-210H
FC46-51-120B

C FB01-53-210J
FB34-53-210G
FC46-51-120B
C FB34-53-210H

9201 FC3****-701886
9801 FC3****-800894
9823 FC3****-801679

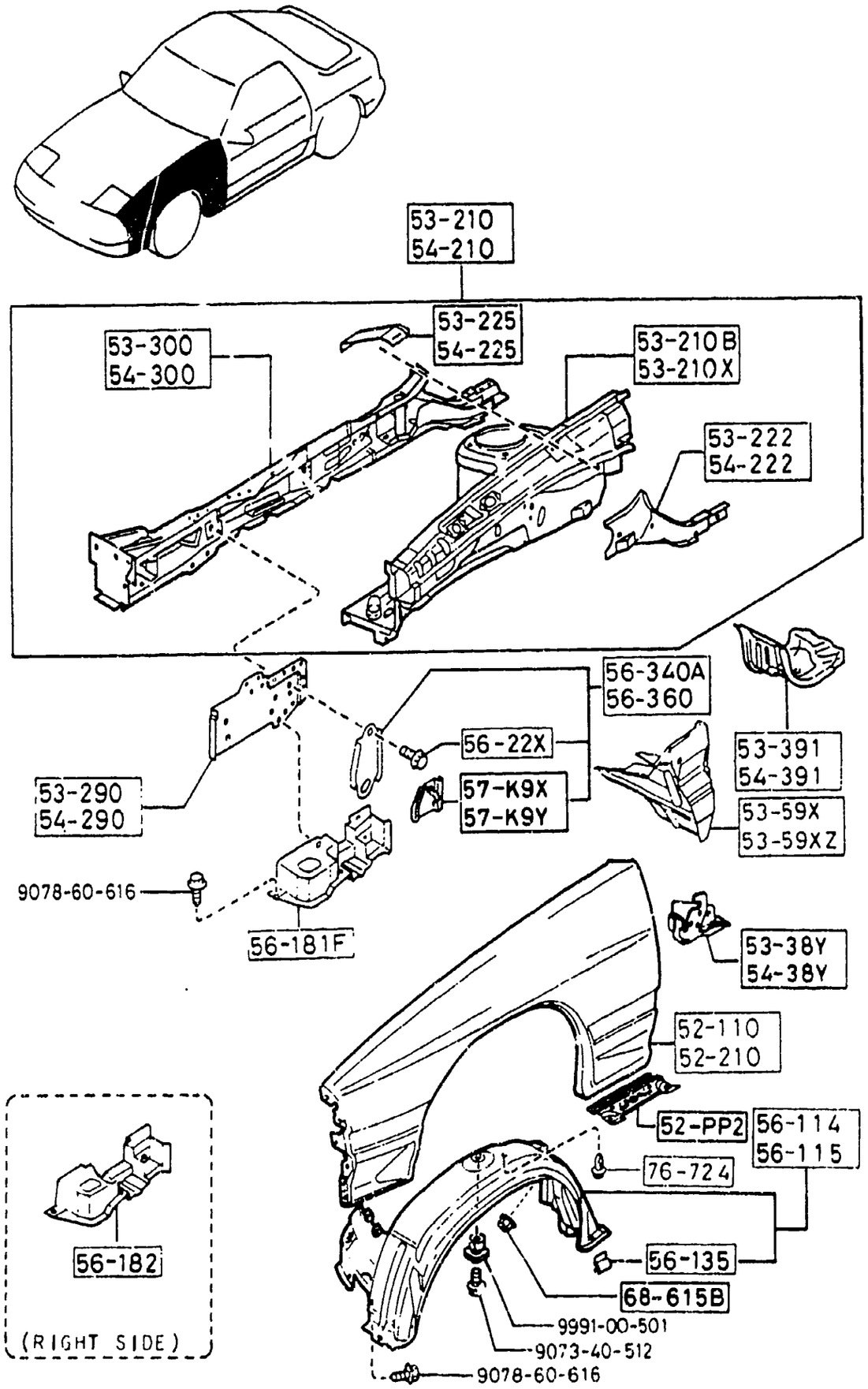




| PART NO. | QTY | MODEL/RESTRICTION | MODEL/RESTRICTION | MODEL/RESTPICTION | FROM-TO |
|---|---|---|---|---|---|
| CONT'D<br>FC66-53-210 | 1 | (CONVERTIBLE) | | | 9823- |
| +----------+<br>\| 53-210X \|<br>+----------+ | | PANEL(L),WHEEL APRON | | | |
| FC01-54-210 | 1 | ((CPE))(W/O TURBO) ) | | | -9201 |
| FC33-54-210<br>AN(FB67-54-210G) | 1 | | | | -9201 |
| FC49-54-210<br>(FB67-54-210H) | 1 | ((CPE))(TURBO) ) | | | -9201 |
| FB67-54-210G<br>A (FB67-54-210H) | 1 | | | | 9201-9801 |
| FB01-54-210M<br>C (FB01-54-210N) | 1 | | | | 9201-9823 |
| F044-54-210M<br>C (F044-54-210N) | 1 | | | | 9201-9823 |
| FB67-54-210H | 1 | (CONVERTIBLE) | | | 9801-9823 |
| FB01-54-210N | 1 | ((CPE))(W/O TURBO) ) | | | 9823- |
| FC66-54-210 | 1 | (CONVERTIBLE) | | | 9823- |
| F044-54-210N | 1 | ((CPE))(TURBO) ) | | | 9823- |
| +----------+<br>\| 53-222 \|<br>+----------+ | | PLATE(RR.,R),CLOSING | | | |
| FB01-53-250A | 1 | | | | -9823 |
| +----------+<br>\| 53-225 \|<br>+----------+ | | REINF.(R),A.B.S.-APR<br>ON | | | |
| FB34-53-225 | 1 | ((CPE))(TURBO) ) | | | |
| +----------+<br>\| 53-290 \|<br>+----------+ | | PLATE(F.,R),CLOSING | | | |
| FC01-53-240 | 1 | | | | -9823 |
| FC66-53-240B<br>AN(FC66-53-240C) | 1 | | | | 9823-9C01 |
| FC66-53-240C | 1 | | | | 9C01- |
| +----------+<br>\| 53-300 \|<br>+----------+ | | FRAME(R),SIDE-FRONT | | | |
| FC01-53-310 | 1 | (CPE) | | | |
| FC33-53-310<br>A (FC33-53-310A) | 1 | | | | -9823 |
| FC33-53-310A | 1 | (CONVERTIBLE) | | | 9823- |
| +----------+<br>\| 53-38Y \|<br>+----------+ | | BRACKET(R),CLOSING P<br>LATE | | | |
| FB67-53-38YC | 1 | (CONVERTIBLE) | | | |
| +----------+<br>\| 53-391 \|<br>+----------+ | | BOX(R),TORQUE | | | |

| | | |
|---|---|---|
| FB01-54-210M | 9201 | FC3***-701886 |
| FC46-51-130B | 9801 | FC3***-800894 |
| C FB01-54-210N | 9823 | FC3***-801679 |
| F044-54-210M | 9C01 | FC3***-804800 |
| FC46-51-130B | | |
| C F044-54-210N | | |

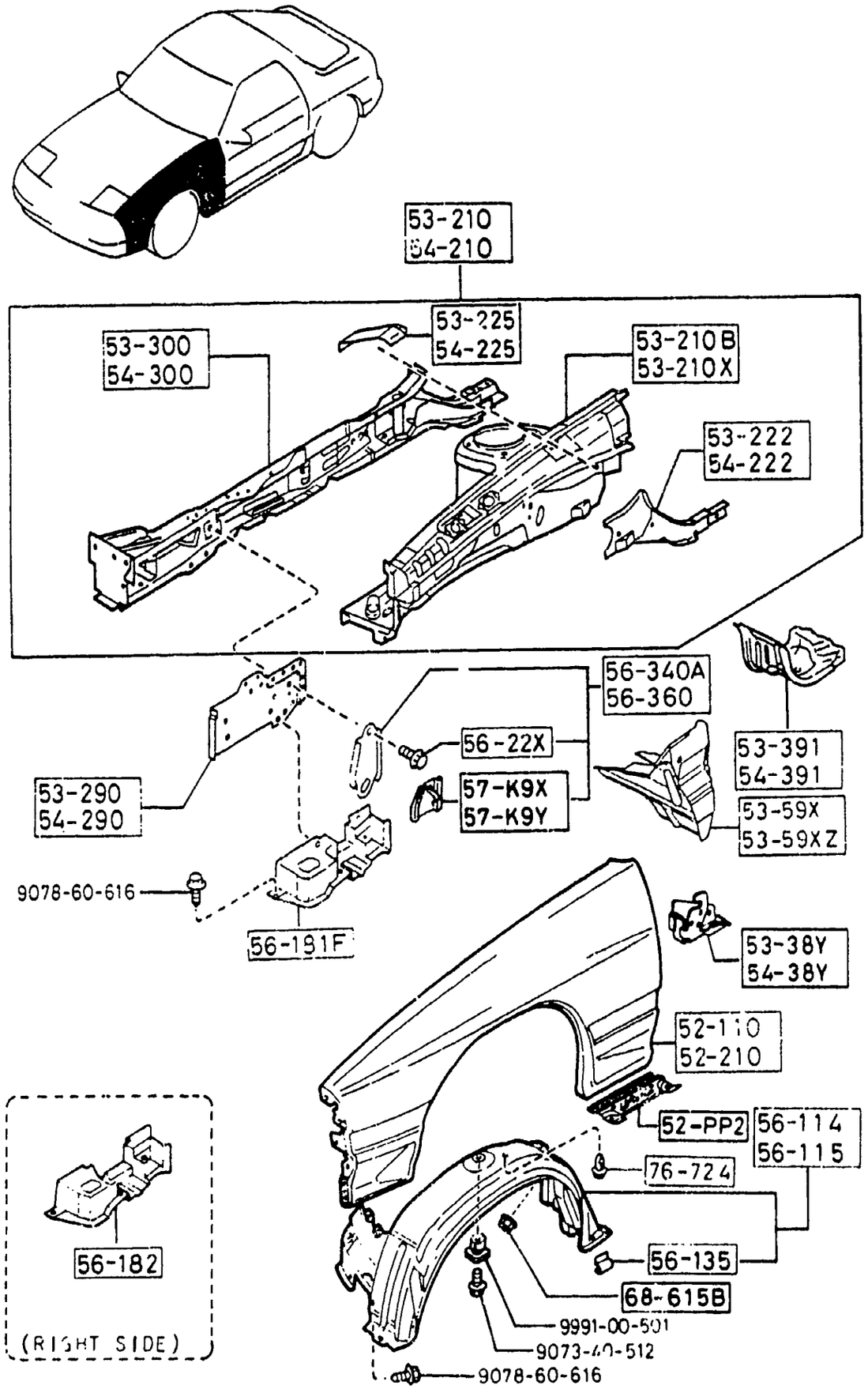


| PART NO. | QTY | MODEL/RESTRICTION | MODEL/RESTRICTION | MODEL/RESTRICTION | FROM-TO |
|---|---|---|---|---|---|
| CONT'D | | | | | |
| FB01-53-391A | 1 | (CPE) | | | |
| FB67-53-391A | 1 | (CONVERTIBLE) | | | |
| 53-59X | | REINF.(R),WHEEL APRON | | | |
| FC56-53-59X | 1 | (CONVERTIBLE) | | | |
| 53-59XZ | | REINF.(L),WHEEL APRON | | | |
| FC56-54-59X | 1 | (CONVERTIBLE) | | | |
| 54-210 | | PANEL(L),WHEEL APRON | | | |
| FC01-54-200 | 1 | ((CPE))(W/O TURBO) ) | | | -9201 |
| FC33-54-200AN(FB67-54-200H) | 1 | | | | -9201 |
| FC49-54-200 | 1 | | | | -9823 |
| FB01-54-200J | 1 | | | | 9201-9823 |
| FB67-54-200H | 1 | (CONVERTIBLE) | | | 9201-9823 |
| FB01-54-200K | 1 | ((CPE))(W/O TURBO) ) | | | 9823- |
| FC49-54-200A | 1 | ((CPE))(TURBO) ) | | | 9823- |
| FC66-54-200 | 1 | (CONVERTIBLE) | | | 9923- |
| 54-222 | | PLATE(RR.,L),CLOSING | | | |
| FB01-54-250A | 1 | | | | |
| 54-225 | | REINF.(L),A.B.S.-APRON | | | |
| F044-54-225 | 1 | ((CPE))(TURBO) ) | | | |
| 54-290 | | PLATE(F.,L),CLOSING | | | |
| FC01-54-240 | 1 | | | | -9823 |
| FC66-54-240BAN(FC66-54-240C) | 1 | | | | 9823-9C01 |
| FC66-54-240C | 1 | | | | 9C01- |
| 54-300 | | FRAME(L),SIDE-FRONT | | | |
| FC01-54-310 | 1 | (CPE) | | | |
| FC33-54-310A (FC33-54-310A) | 1 | | | | -9823 |
| FC33-54-310A | 1 | (CONVERTIBLE) | | | 9823- |
| 54-38Y | | BRACKET(L),CLOSING PLATE | | | |
| FB67-54-38YC | 1 | (CONVERTIBLE) | | | |

9201 FC3***-701886
9823 FC3***-801679
9C01 FC3***-804800

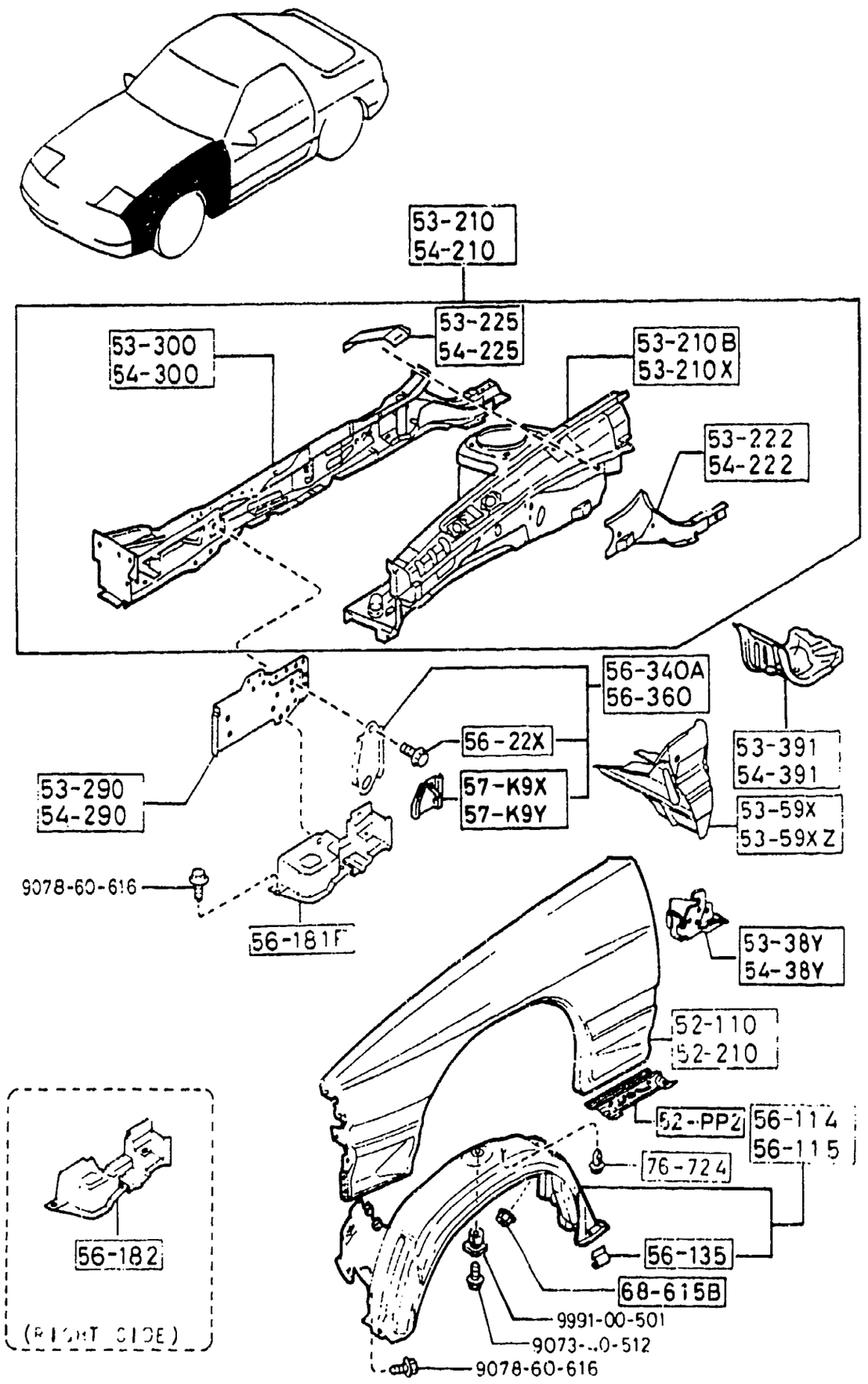


| PART NO. | QTY | MODEL/RESTRICTION | MODEL/RESTRICTION | MODEL/RESTRICTION | FROM-TO |
|---|---|---|---|---|---|
| 54-391 | | BOX(L),TORQUE | | | |
| F801-54-391A | 1 | (CPE) | | | |
| FB67-54-391A | 1 | (CONVERTIBLE) | | | |
| 56-114 | | GUARD(R),MUD | | | |
| FC01-56-130 | 1 | (CPE) | | | |
| FC33-56-130 | 1 | (CONVERTIBLE) | | | -9808 |
| FC66-56-130 | 1 | (CONVERTIBLE) | | | 9808- |
| 56-115 | | GUARD(L),MUD | | | |
| FC01-56-140 | 1 | (CPE) | | | |
| FC33-56-140 | 1 | (CONVERTIBLE) | | | -9808 |
| FC66-56-140 | 1 | (CONVERTIBLE) | | | 9808- |
| 56-135 | | RUBBER,STOP | | | |
| 8173-56-135 | 10 | | | | |
| 56-181F | | PLATE(L),SEAL-CLOSING | | | |
| FB01-56-181A | 1 | | | | |
| 56-182 | | PLATE(R),SEAL-CLOSING | | | |
| FB01-56-182A | 1 | | | | |
| 56-22X | | BOLT,TIE DOWN HOOK-FRONT | | | |
| FB01-56-22X | 6 | | | | |
| 56-340A | | HOOK(R),TIE DOWN-FRONT | | | |
| FC66-56-220A | 1 | (W/AIR BAG) | | | |
| FB01-56-221A | 1 | (W/O AIR BAG) | | | |
| 56-360 | | HOOK(L),TIE DOWN-FRONT | | | |
| FC66-56-230A | 1 | (W/AIR BAG) | | | |
| FB01-56-231A | 1 | (W/O AIR BAG) | | | |
| 57-K9X | | PROTECTOR(R),AIR BAG | | | |
| FC66-57-K9XB | 1 | (CONVERTIBLE) | | | 9823- |
| 57-K9Y | | PROTECTOR(L),AIR BAG | | | |
| FC66-57-K9YB | 1 | (CONVERTIBLE) | | | 9823- |

9808 FC3####-801273
9823 FC3####-801679

AUFA02

CAT. AUFA02-06

1992-05

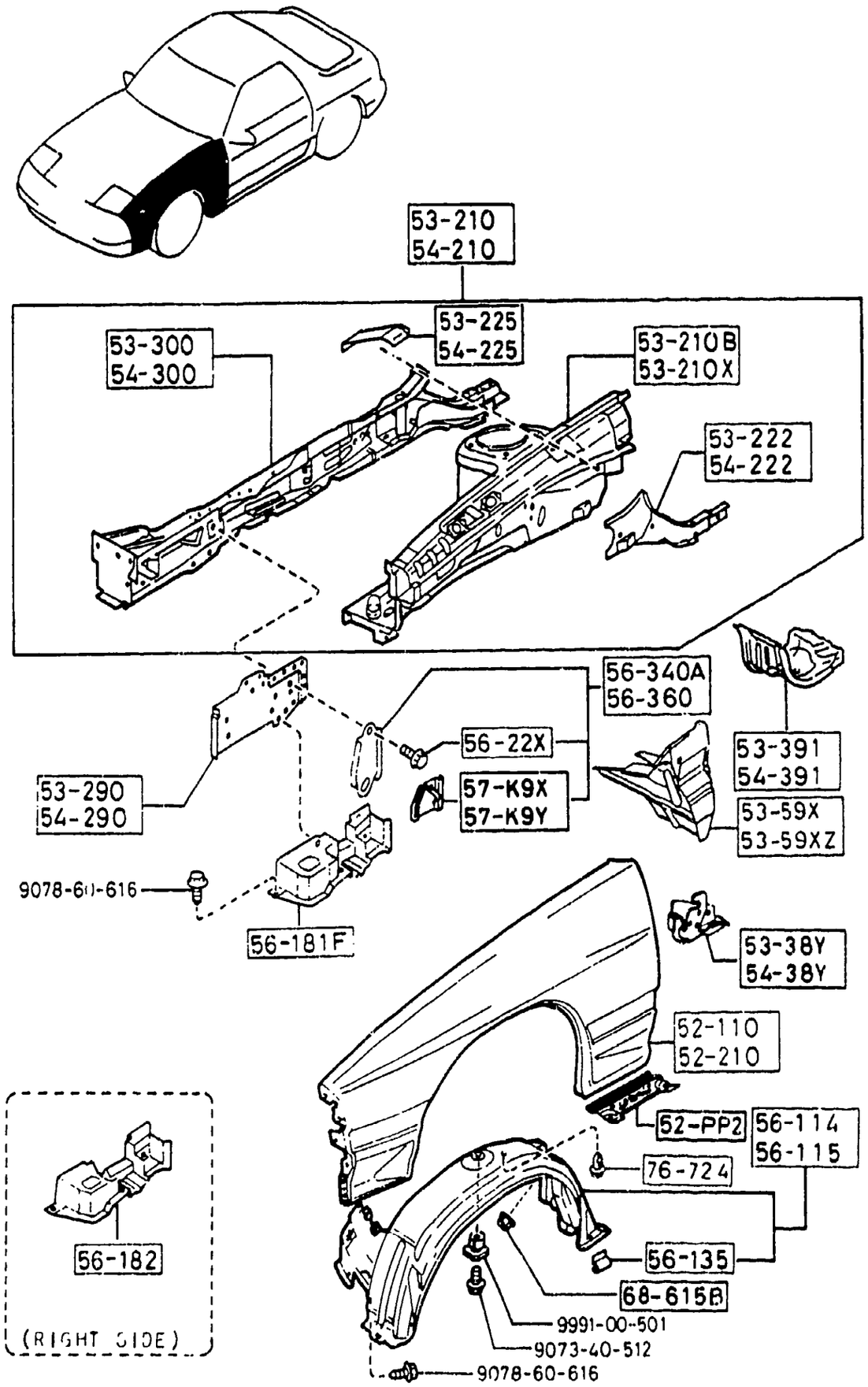


| PART NO. | QTY | MODEL/RESTRICTION | MODEL/RESTRICTION | MODEL/RESTRICTION | FROM-TO |
|---|---|---|---|---|---|
| 68-6158 | | NUT,FLANGE-CAP | | | |
| B100-68-615 | 2 | (CPE) | | | |
| 76-724 | | RIVET | | | |
| B092-51-833 | 2 | | | | |

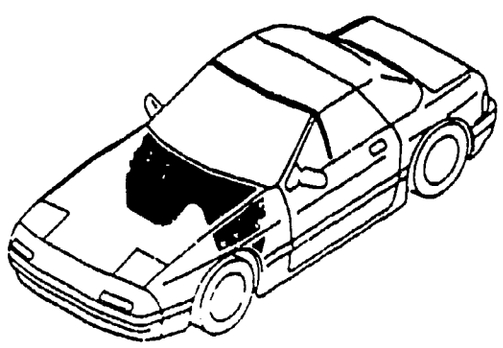

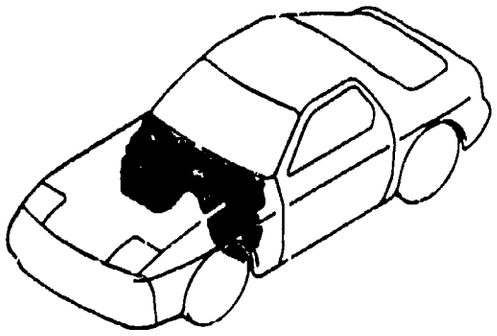

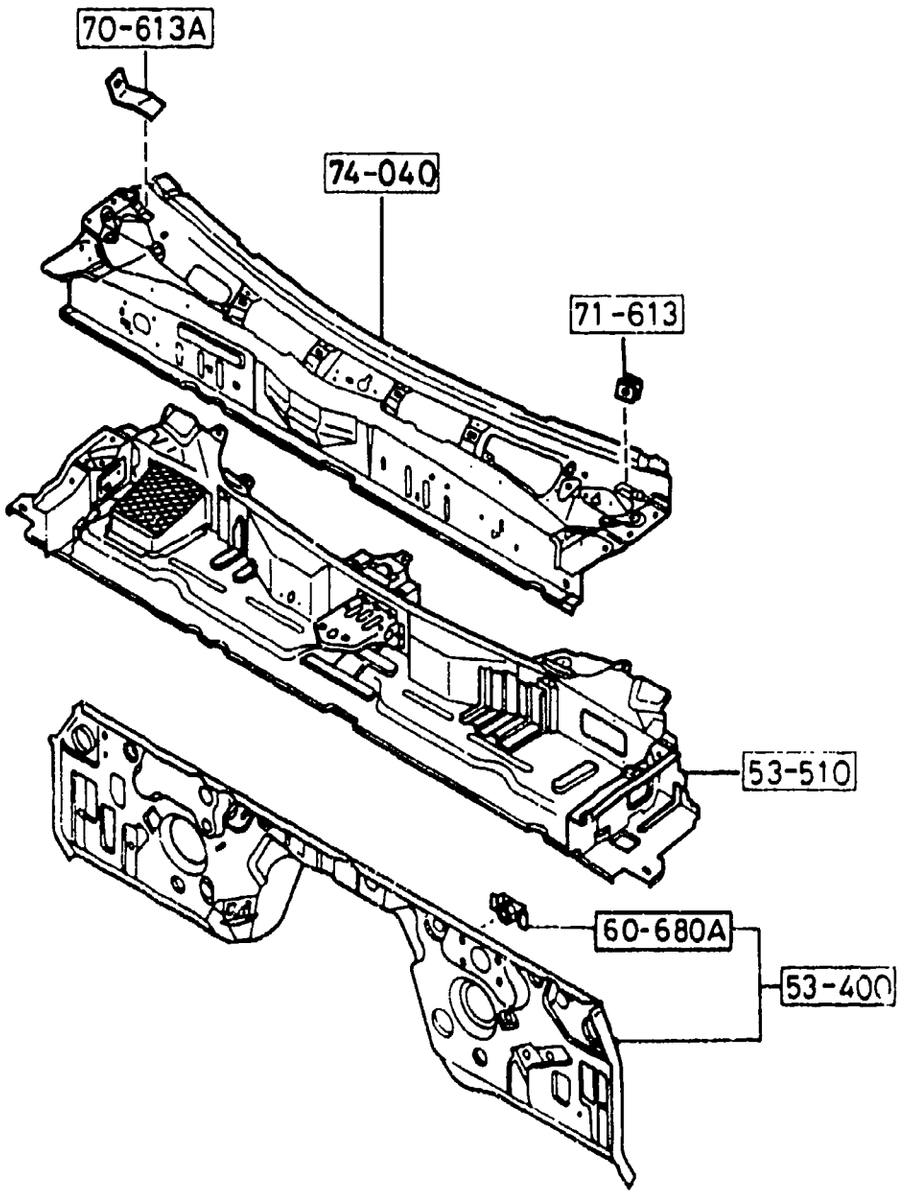


| PART NO. | QTY | MODEL/RESTRICTION | MODEL/RESTRICTION | MODEL/RESTRICTION | FROM-TO |
|---|---|---|---|---|---|
| 53-400 | | PANEL,DASH-LOWER | | | |
| FB01-54-400H | 1 | ((CPE))(W/O TURBO) ) | | | |
| FB55-54-400D | 1 | ((CPE))(TURBO) ) | | | |
| FB67-54-400E | 1 | (CONVERTIBLE) | | | |
| 53-510 | | PANEL,DASH-UPPER | | | |
| FB01-53-510C | 1 | (CPE) | | | |
| FB67-53-510C A (FC66-53-510 ) | 1 | | | | -9801 |
| FC66-53-510 | 1 | (CONVERTIBLE) | | | 9801- |
| 60-680A | | BRACKET,FLOOR | | | |
| 0305-53-160 | 2 | | | | |
| 70-613A | | BRKT(R),PILLAR GARNISH | | | |
| FB01-70-613B | 1 | | | | |
| 71-613 | | BRKT(L),PILLAR GARNISH | | | |
| FB01-71-613B | 1 | | | | |
| 74-040 | | PANEL,COWL | | | |
| FB01-70-610L | 1 | (CPE) | | | |
| FB67-70-610E | 1 | (CONVERTIBLE) | | | |

9801 FC3****-800894

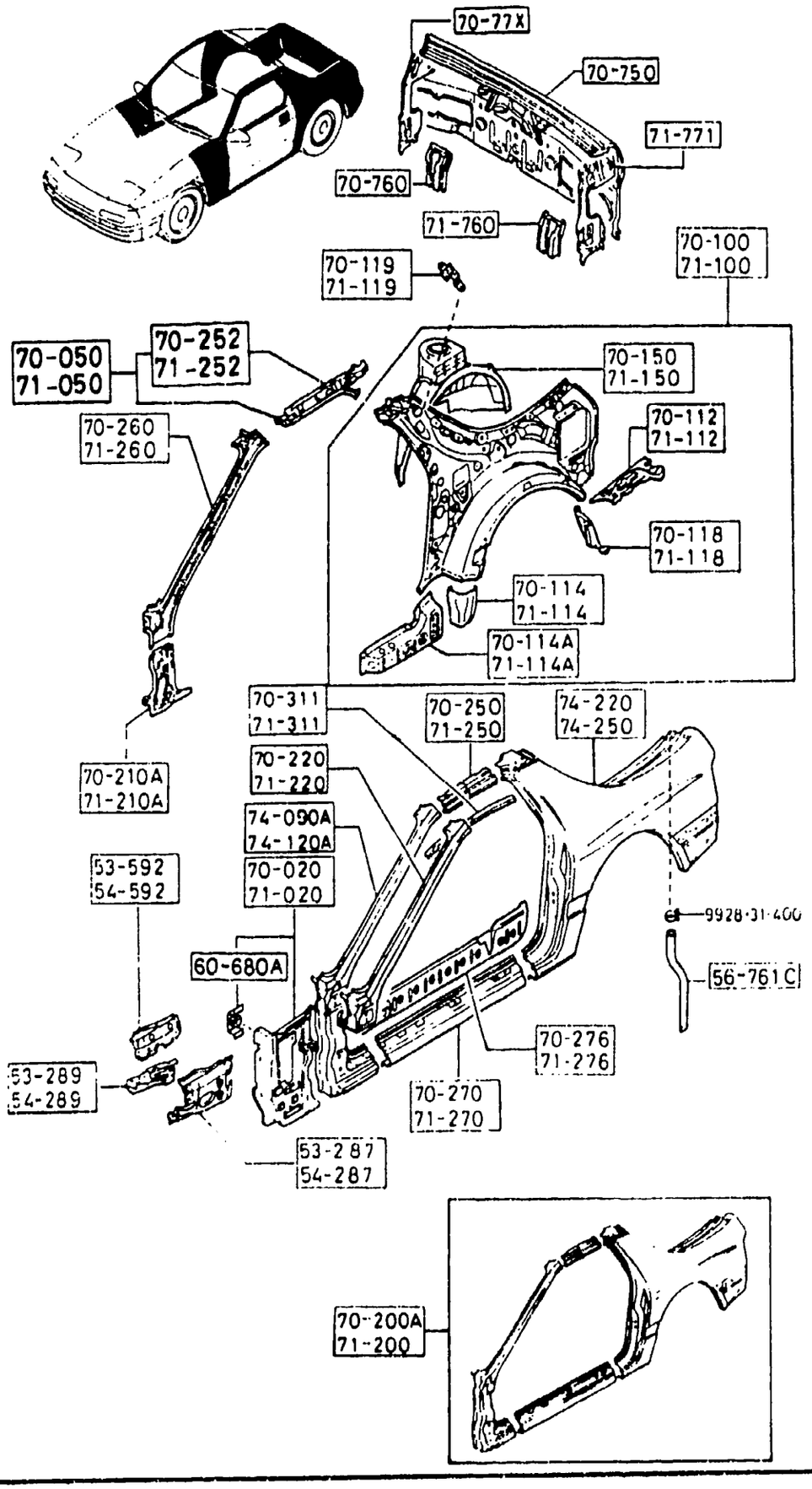




| PART NO. | QTY | MODEL/RESTRICTION | MODEL/RESTRICTION | MODEL/RESTRICTION | FROM-TO |
|---|---|---|---|---|---|
| 53-287 | | REINF.(R),COWL SIDE PANEL | | | |
| FB01-53-287A | 1 | | | | |
| 53-289 | | REINF.(R),COWL SIDE-INNER | | | |
| FB01-53-289 | 1 | | | | |
| 53-592 | | PLATE(UP.,R),COWL SIDE-OU | | | |
| FB01-53-592B | 1 | | | | |
| 54-287 | | REINF.(L),COWL SIDE PANEL | | | |
| FB01-54-287A | 1 | | | | |
| 54-289 | | REINF.(L),COWL SIDE-INNER | | | |
| FB01-54-289 | 1 | | | | |
| 54-592 | | PLATE(UP.,L),COWL SIDE-OU | | | |
| FB01-54-592B | 1 | | | | |
| 56-761C | | PIPE,DRAIN-RR FENDER | | | |
| FB01-56-761 | 2 | | | | |
| 60-680A | | BRACKET,FLOOR | | | |
| 0305-53-160 | 1 | | | | |
| 70-020 | | PANEL(R),COWL SIDE | | | |
| FB01-70-210E | 1 | | | | |
| 70-050 | | RAIL(R),ROOF-INNER | | | |
| FC01-70-050 | 1 | (W/O SUN-RF) | | | |
| FC03-70-050 | 1 | (SUNROOF) | | | |
| 70-100 | | PANEL(R),QUARTER | | | |
| FC01-70-100B | 1 | | | | -9601 |
| AN(FC01-70-100C) | | | | | |
| FC01-70-100C | 1 | | | | 9601- |
| 70-112 | | PANEL(RR ,R),QUARTER -LOW. | | | |
| FB01-70-112A | 1 | | | | |
| 70-114 | | PLATE(R),END | | | |
| FC01-70-113 | 1 | | | | |

9601 FC3####-708021

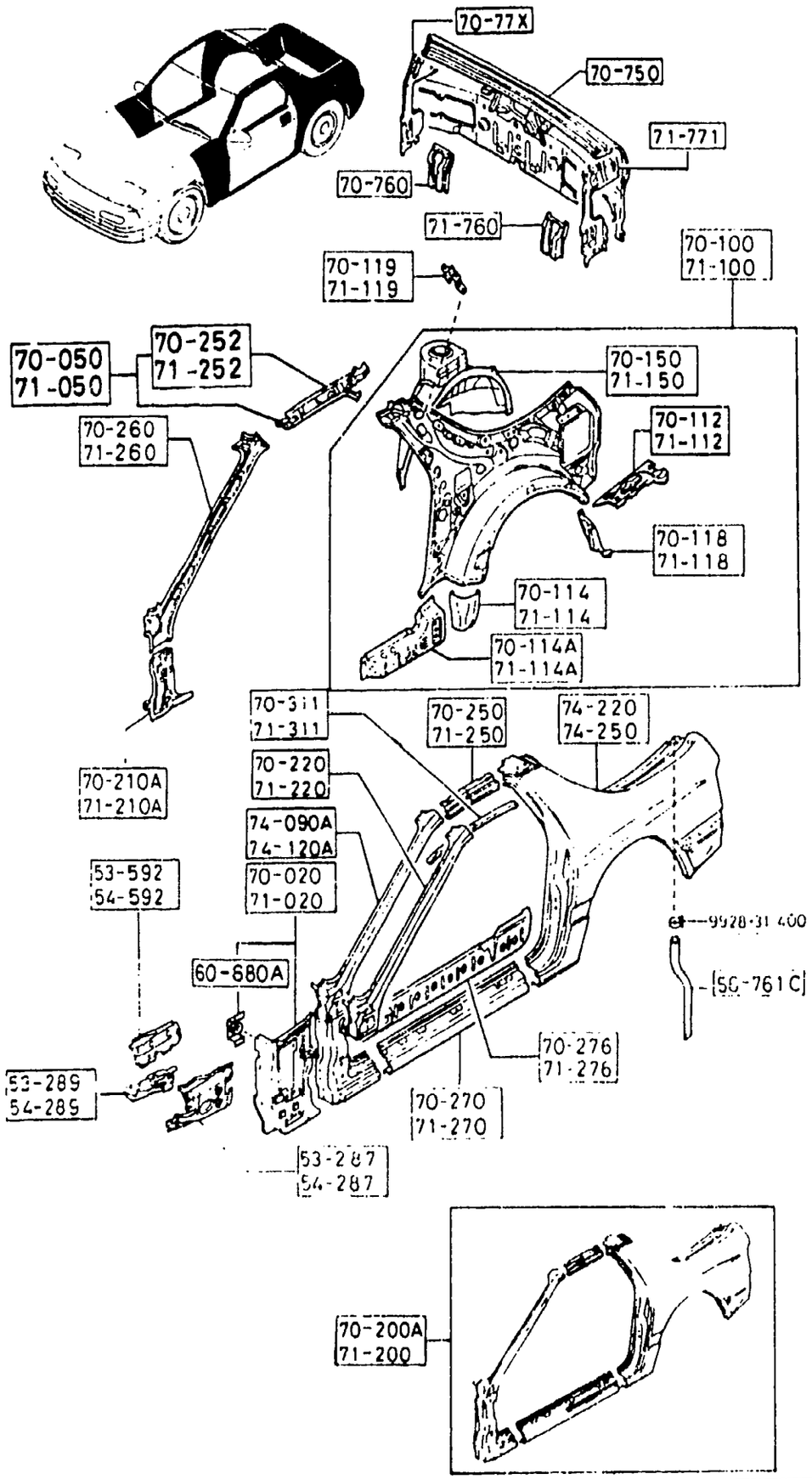




| PART NO. | QTY | MODEL/RESTRICTION | MODEL/RESTRICTION | MODEL/RESTRICTION | FROM-TO |
|---|---|---|---|---|---|
| 70-114A | | JUNCTION(R),CORNER-Q/PANE | | | |
| FB01-70-114A | 1 | | | | |
| 70-118 | | PROTECTOR(R),SPLASH | | | |
| FB01-70-118A | 1 | | | | |
| 70-119 | | BRKT(R),TRIM-QTR PANEL | | | |
| FB01-70-119A | 1 | | | | |
| 70-150 | | PANEL(R),WHEEL HOUSE | | | |
| FC01-70-150AN(FC01-70-150A) | 1 | | | | -9601 |
| FC01-70-150A A (FC01-70-150B) | 1 | | | | 9601-9C01 |
| FC01-70-150B | 1 | | | | 9C01- |
| 70-200A | | FRAME(R),SIDE-OUTER | | | |
| FCY1-70-200A | 1 | | | | |
| 70-210A | | PILLAR(R),HINGE | | | |
| FB01-70-020 | 1 | | | | |
| 70-220 | | PILLAR(R,UP.),FRONT- | | | |
| FB01-70-220D | 1 | | | | |
| 70-250 | | RAIL(R),ROOF-OUTER | | | |
| FBY1-70-251 | 1 | | | | |
| 70-252 | | REINF.(R).ROOF RAIL | | | |
| FC01-70-052 | 1 | | | | |
| 70-260 | | PILLAR(R),FRT.-INNER | | | |
| FC01-70-240B | 1 | | | | |
| 70-270 | | PANEL(R),SIDE SILL | | | |
| FCY1-70-271A | 1 | | | | |
| 70-276 | | REINF.(R),SIDE SILL | | | |
| FB01-70-273 | 1 | | | | |
| 70-311 | | RAIL(R),RAIN | | | |

9601 FC3***-708021
9C01 FC3***-804800

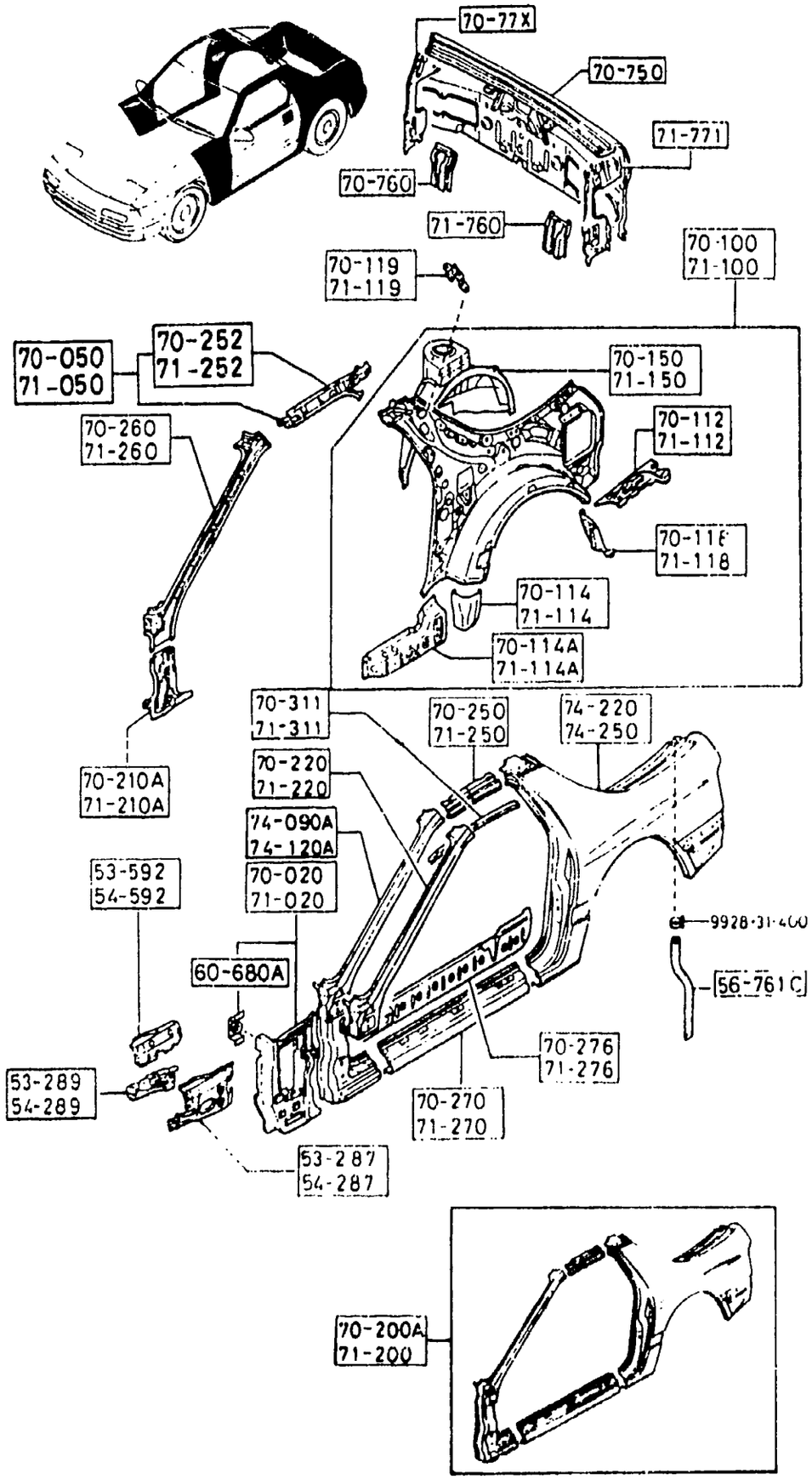




| PART NO. | QTY | MODEL/RESTRICTION | MODEL/RESTRICTION | MODEL/RESTRICTION | FROM-TO |
|---|---|---|---|---|---|
| CONT'D | | | | | |
| FB01-70-321A | 1 | | | | |
| 70-750 | | PANEL,REAR END | | | |
| FC01-70-75X | 1 | | | | |
| 70-760 | | TOWER(R),LOCK-RR END PANEL | | | |
| FB01-70-760C | 1 | | | | |
| 70-77X | | PANEL(R),QTR-REAR END | | | |
| FB01-70-77X | 1 | | | | |
| 71-020 | | PANEL(L),COWL SIDE | | | |
| FB01-71-210F | 1 | | | | |
| 71-050 | | RAIL(L),ROOF-INNER | | | |
| FC01-71-050 | 1 | (W/O SUN-RF) | | | |
| FC03-71-050 | 1 | (SUNROOF) | | | |
| 71-100 | | PANEL(L),QUARTER | | | |
| FC01-71-100B | 1 | | | | -9601 |
| AN(FC01-71-100C) | | | | | |
| FC01-71-100C | 1 | | | | 9601- |
| 71-112 | | PANEL(RR ,L),QUARTER -LOW. | | | |
| FB01-71-112D | 1 | | | | |
| 71-114 | | PLATE(L),END | | | |
| FC01-71-113 | 1 | | | | |
| 71-114A | | JUNCTION(L),CORNER-Q /PANE | | | |
| FB01-71-114A | 1 | | | | |
| 71-118 | | PROTECTOR(L),SPLASH | | | |
| FB01-71-118A | 1 | | | | |
| 71-119 | | BRKT(L),TRIM-QTR PANEL | | | |
| FB01-71-119A | 1 | | | | |
| 71-150 | | PANEL(L),WHEEL HOUSE | | | |
| FC01-71-150 | 1 | | | | -9601 |
| AN(FC01-71-150A) | | | | | |

9601 FC3####-708021

SECTION NAME INDEX (BODY)1/2

| LO.NO | SEC.NO | SECTION NAME |
|---|---|---|
| 3-C03 | 0900 | KEY SETS |
| 3-F03 | 5000 | FRONT BUMPER |
| 3-H03 | 5010 | REAR BUMPER |
| 3-J03 | 5020 | HEAD LAMP CLEANER |
| 3-L03 | 5030 | WINDOW MOULDINGS |
| 3-M03 | 5040 | BODY MOULDINGS (COUPE) |
| 3-E04 | 5060 | SIDE PROTECTORS |
| 3-I04 | 5100 | HEAD LAMPS |
| 3-J04 | 5103 | HEAD LAMP RETRACTORS |
| 3-N04 | 5105 | FRONT COMBINATION LAMPS |
| 3-G05 | 5110 | REAR COMBINATION LAMPS |
| 3-K05 | 5120 | LICENSE LAMPS |
| 3-M05 | 5125 | INTERIOR LAMPS |
| 3-N05 | 5130 | OVERHEAD CONSOLE |
| 3-C06 | 5170 | ORNAMENTS |
| 3-D06 | 5180 | COWL & EXTRACTOR GRILLES |
| 3-G06 | 5230 | BONNET |
| 3-J06 | 5260 | TRUNK LID (CONVERTIBLE) |
| 3-L06 | 5310 | BODY PANELS (FRONT) (COUPE) |
| 3-C07 | 5310 A | BODY PANELS (FRONT) (CONVERTIBLE) |
| 3-F07 | 5320 | BODY PANELS (FENDER & WHEEL APRON) |
| 3-K07 | 5330 | BODY PANELS (DASH & COWL PANEL) |
| 3-L07 | 5340 | BODY PANELS (SIDE) (COUPE) |
| 3-E08 | 5340A | BODY PANELS (SIDE) (CONVERTIBLE) |
| 3-K08 | 5360 | BODY PANELS (ROOF) (W/O SUN ROOF) |
| 3-L08 | 5360 A | BODY PANELS (ROOF) (SUN ROOF) |
| 3-M08 | 5370 | BODY PANELS (FLOOR) (COUPE) |
| 3-D09 | 5370 A | BODY PANELS (FLOOR) (CONVERTIBLE) |
| 3-H09 | 5380 | FLOOR ATTACHMENTS (HOLE COVERS) |
| 3-J09 | 5390 | FLOOR ATTACHMENTS |
| 3-C10 | 5500 | DASHBOARD EQUIPMENTS |
| 3-F10 | 5520 | METER HOOD |
| 3-G10 | 5530 | SPEEDOMETER CABLE |
| 3-H10 | 5540 | METER COMPONENTS |
| 3-J10 | 5560 | DASHBOARD & RELATED PARTS |
| 3-E11 | 5570 | CONSOLE |
| 3-H11 | 5580 | VENTILATOR |
| 3-J11 | 5700 | FRONT SEATS (COUPE) |
| 3-E13 | 5700A | FRONT SEATS (CONVERTIBLE) |
| 3-K13 | 5750 | REAR SEATS (COUPE) |
| 3-M13 | 5790 | SEAT BELTS (COUPE) |
| 3-C14 | 5790A | SEAT BELTS (CONVERTIBLE) |
| 3-D14 | 5800 | FRONT DOORS (COUPE) |
| 3-G14 | 5800A | FRONT DOORS (CONVERTIBLE) |
| 3-K14 | 5830 | FRONT DOOR MECHANISMS (COUPE) |
| 3-F15 | 5830A | FRONT DOOR MECHANISMS (CONVERTIBLE) |
| 3-J15 | 5840 | FRONT DOOR TRIMS & RELATED PARTS (COUPE) |
| 3-H16 | 5840A | FRONT DOOR TRIMS & RELATED PARTS (CONVERTIBLE) |

CATLOG-NO= AUFA02-06

DATE. 1992-05

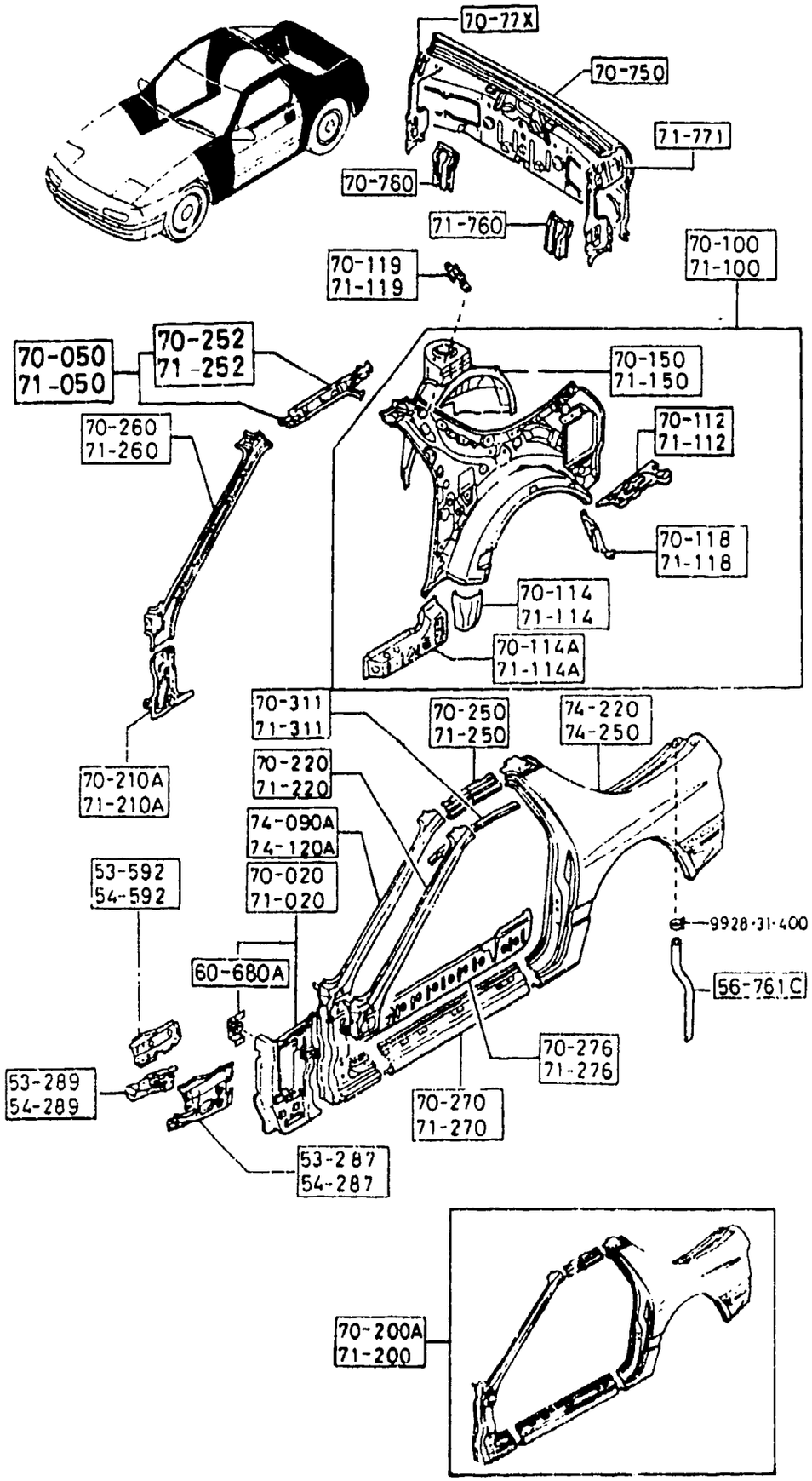




| PART NO. | QTY | MODEL/RESTRICTION | MODEL/RESTRICTION | MODEL/RESTRICTION | FROM-TO |
|---|---|---|---|---|---|
| CONT'D | | | | | |
| FC01-71-150A<br>A (FC01-71-150B) | 1 | | | | 9601-9C01 |
| FC01-71-150B | 1 | | | | 9C01- |
| +---------+<br>\| 71-200 \|<br>+---------+ | | FRAME(L),SIDE-OUTER | | | |
| FCY1-71-200A | 1 | | | | |
| +---------+<br>\| 71-210A \|<br>+---------+ | | PILLAR(L),HINGE | | | |
| FB01-71-020 | 1 | | | | |
| +---------+<br>\| 71-220 \|<br>+---------+ | | PILLAR(L,UP.),FRONT- | | | |
| FB01-71-220D | 1 | | | | |
| +---------+<br>\| 71-250 \|<br>+---------+ | | RAIL(L),ROOF-OUTER | | | |
| FBY1-71-251 | 1 | | | | |
| +---------+<br>\| 71-252 \|<br>+---------+ | | REINF.(L),ROOF RAIL | | | |
| FC01-71-052 | 1 | | | | |
| +---------+<br>\| 71-260 \|<br>+---------+ | | PILLAR(L),FRT.-INNER | | | |
| FC01-71-240B | 1 | | | | |
| +---------+<br>\| 71-270 \|<br>+---------+ | | PANEL(L),SIDE SILL | | | |
| FCY1-71-271A | 1 | | | | |
| +---------+<br>\| 71-276 \|<br>+---------+ | | REINF.(L),SIDE SILL | | | |
| FB01-71-273 | 1 | | | | |
| +---------+<br>\| 71-311 \|<br>+---------+ | | RAIL(L),RAIN | | | |
| FB01-71-321A | 1 | | | | |
| +---------+<br>\| 71-760 \|<br>+---------+ | | TOWER(L),LOCK-RR END PANEL | | | |
| FB01-71-760B | 1 | | | | |
| +---------+<br>\| 71-771 \|<br>+---------+ | | PANEL(L),QTR-REAR END | | | |
| FB01-71-771A | 1 | | | | |
| +---------+<br>\| 74-090A \|<br>+---------+ | | PILLAR(R),FRONT-OUT. | | | |
| FBY1-70-210C | 1 | | | | |
| +---------+<br>\| 74-120A \|<br>+---------+ | | PILLAR(L),FRONT-OUT. | | | |

9601 FC3###-708021
9C01 FC3###-804800

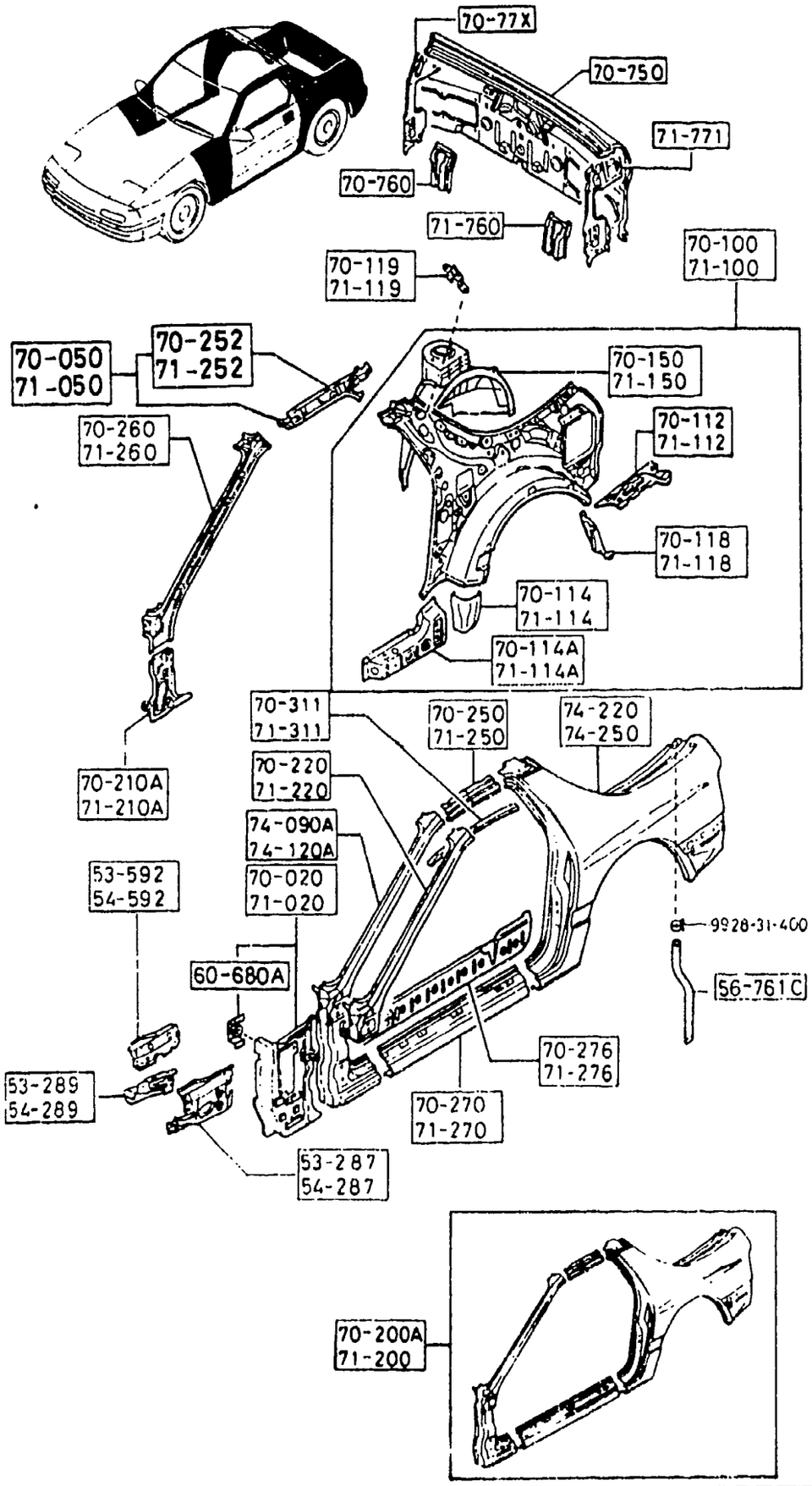




| PART NO. | QTY | MODEL/RESTRICTION | MODEL/RESTRICTION | MODEL/RESTRICTION | FROM-TO |
|---|---|---|---|---|---|
| CONT'D | | | | | |
| FBY1-71-210C | 1 | | | | |
| 74-220 | | PANEL(R),FENDER-REAR | | | |
| FCY1-70-400 | 1 | | | | |
| 74-250 | | PANEL(L),FENDER-REAR | | | |
| FCY1-71-400 | 1 | | | | |

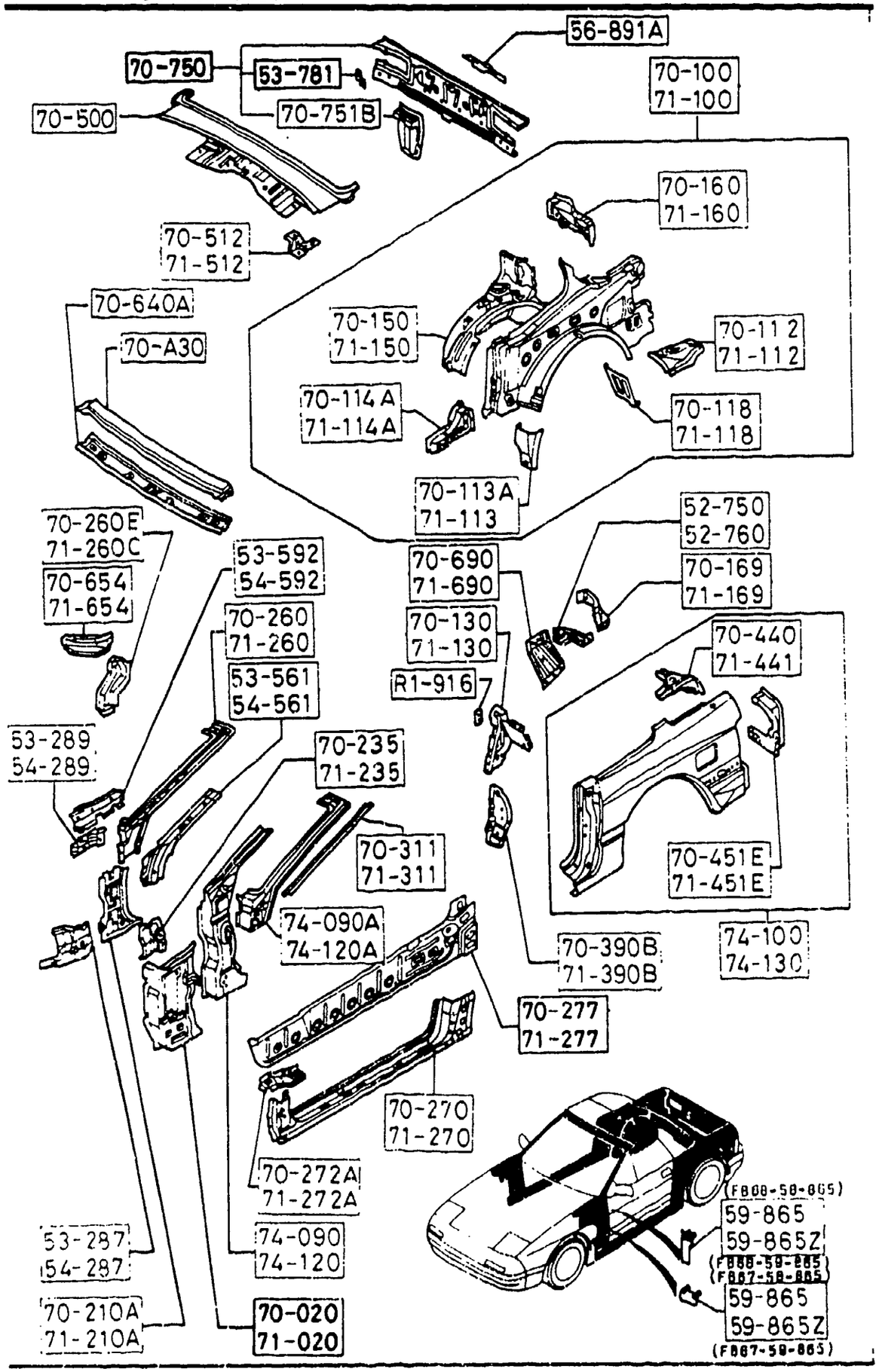


AUFA02



| PART NO. | QTY | MODEL/RESTRICTION | MODEL/RESTRICTION | MODEL/RESTRICTION | FROM-TO |
|---|---|---|---|---|---|
| R1-916<br>FB67-R1-916 | 2 | PLATE,SET-HINGE BRACKET | | | |
| 52-750<br>FB67-52-750 | 1 | BRKT(R),DAMPER STAY-QTR | | | |
| 52-760<br>FB67-52-760 | 1 | BRKT(L),DAMPER STAY-QTR | | | |
| 53-287<br>FB67-53-287 | 1 | REINF.(R),COWL SIDE PANEL | | | |
| 53-289<br>FB01-53-289 | 1 | REINF.(R),COWL SIDE-INNER | | | |
| 53-561<br>FB67-70-246B | 1 | REINF.(R),F. PILLER INNER | | | |
| 53-592<br>FB67-53-592 | 1 | PLATE(UP.,R),COWL SIDE-OU | | | |
| 53-781<br>0305-53-781A | 4 | BRACKET,GRILLE-C | | | |
| 54-287<br>FB67-54-287 | 1 | REINF.(L),COWL SIDE PANEL | | | |
| 54-289<br>FB01-54-289 | 1 | REINF.(L),COWL SIDE-INNER | | | |
| 54-561<br>FB67-71-246B | 1 | REINF.(L),F. PILLER INNER | | | |
| 54-592<br>FB67-54-592 | 1 | PLATE(UP.,L),COWL SIDE-OU | | | |
| 56-891A<br>FB67-56-890 | 1 | REINF.LOCK-R.END PANEL | | | |
| 59-865<br>FB67-58-865 | 1 | VALVE(R),SHUTTER | | | |

CAT. AUFA02-06

1992-05

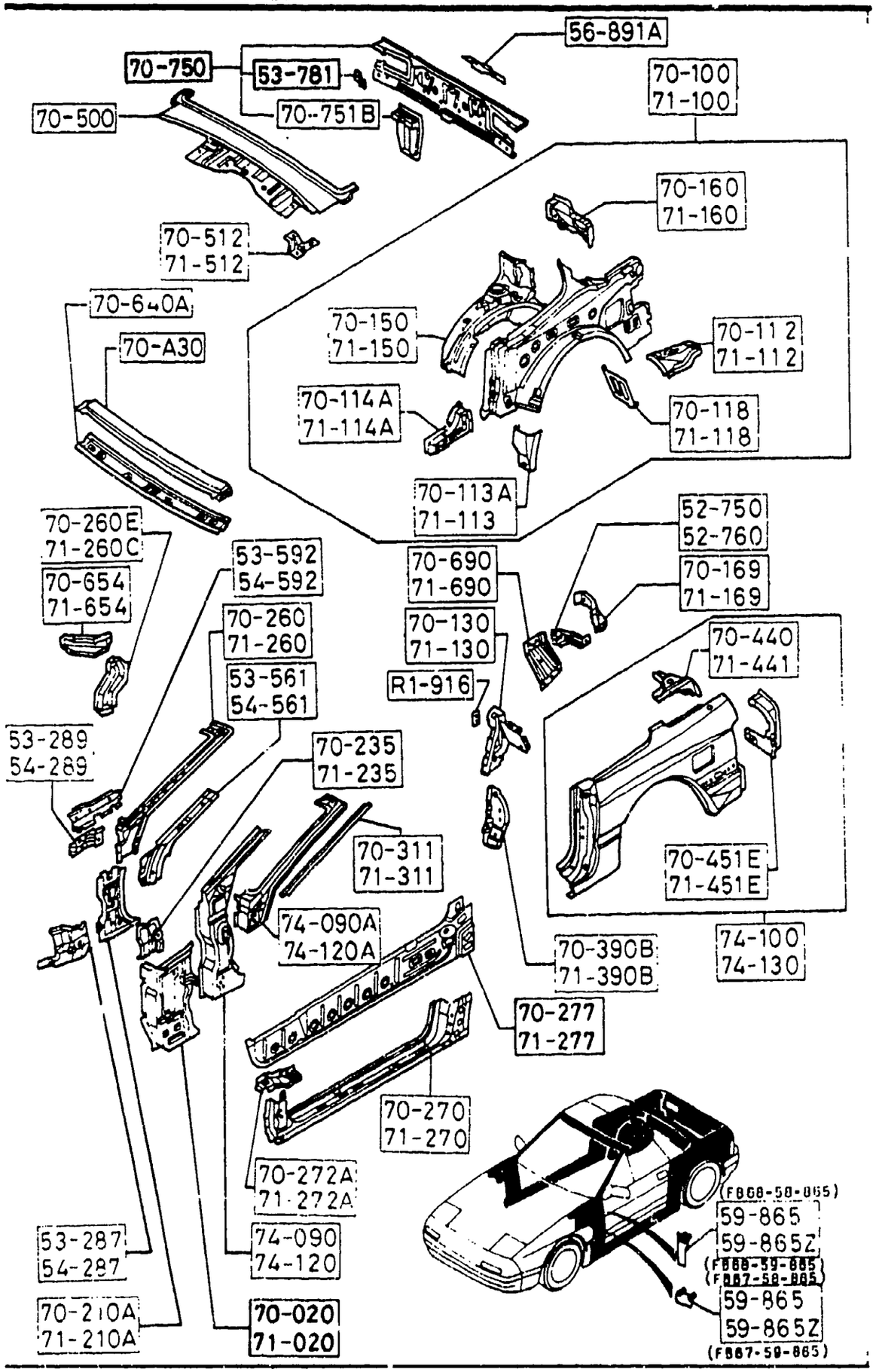




| PART NO. | QTY | MODEL/RESTRICTION | MODEL/RESTRICTION | MODEL/RESTRICTION | FROM-TO |
|---|---|---|---|---|---|
| CONT'D<br>FB68-58-865 | 1 | | | | |
| +----------+<br>\| 59-865Z \|<br>+----------+ | | VALVE(L),SHUTTER | | | |
| FB67-59-865 | 1 | | | | |
| FB68-59-865 | 1 | | | | |
| +----------+<br>\| 70-A30 \|<br>+----------+ | | HEADER,FRONT-OUTER | | | |
| FB67-70-631B | 1 | | | | |
| +----------+<br>\| 70-020 \|<br>+----------+ | | PANEL(R),COWL SIDE | | | |
| FB67-70-230C | 1 | | | | |
| +----------+<br>\| 70-100 \|<br>+----------+ | | PANEL(R),QUARTER | | | |
| FC33-70-100<br>AN(FC33-70-100A) | 1 | | | | -9601 |
| FC33-70-100A | 1 | | | | 9601- |
| +----------+<br>\| 70-112 \|<br>+----------+ | | PANEL(RR ,R),QUARTER<br>-LOW. | | | |
| FB01-70-112A | 1 | | | | |
| +----------+<br>\| 70-113A \|<br>+----------+ | | PLATE(R),SEAL | | | |
| FB67-70-113 | 1 | | | | |
| +----------+<br>\| 70-114A \|<br>+----------+ | | JUNCTION(R),CORNER-Q<br>/PANE | | | |
| FB67-70-114 | 1 | | | | |
| +----------+<br>\| 70-118 \|<br>+----------+ | | PROTECTOR(R),SPLASH | | | |
| FB01-70-118A | 1 | | | | |
| +----------+<br>\| 70-130 \|<br>+----------+ | | BRKT(R),FORMING BAR | | | |
| FB67-70-130D | 1 | | | | |
| +----------+<br>\| 70-150 \|<br>+----------+ | | PANEL(R),WHEEL HOUSE | | | |
| FB67-70-150B<br>AN(FB67-70-150C) | 1 | | | | -9601 |
| FB67-70-150C<br>A (FB67-70-150D) | 1 | | | | 9601-9C01 |
| FB67-70-150D | 1 | | | | 9C01- |
| +----------+<br>\| 70-160 \|<br>+----------+ | | PLATE(R),REAR CORNER<br>-IN. | | | |
| FB67-70-160B | 1 | | | | |

9601 FC3***-708021
9C01 FC3***-804800

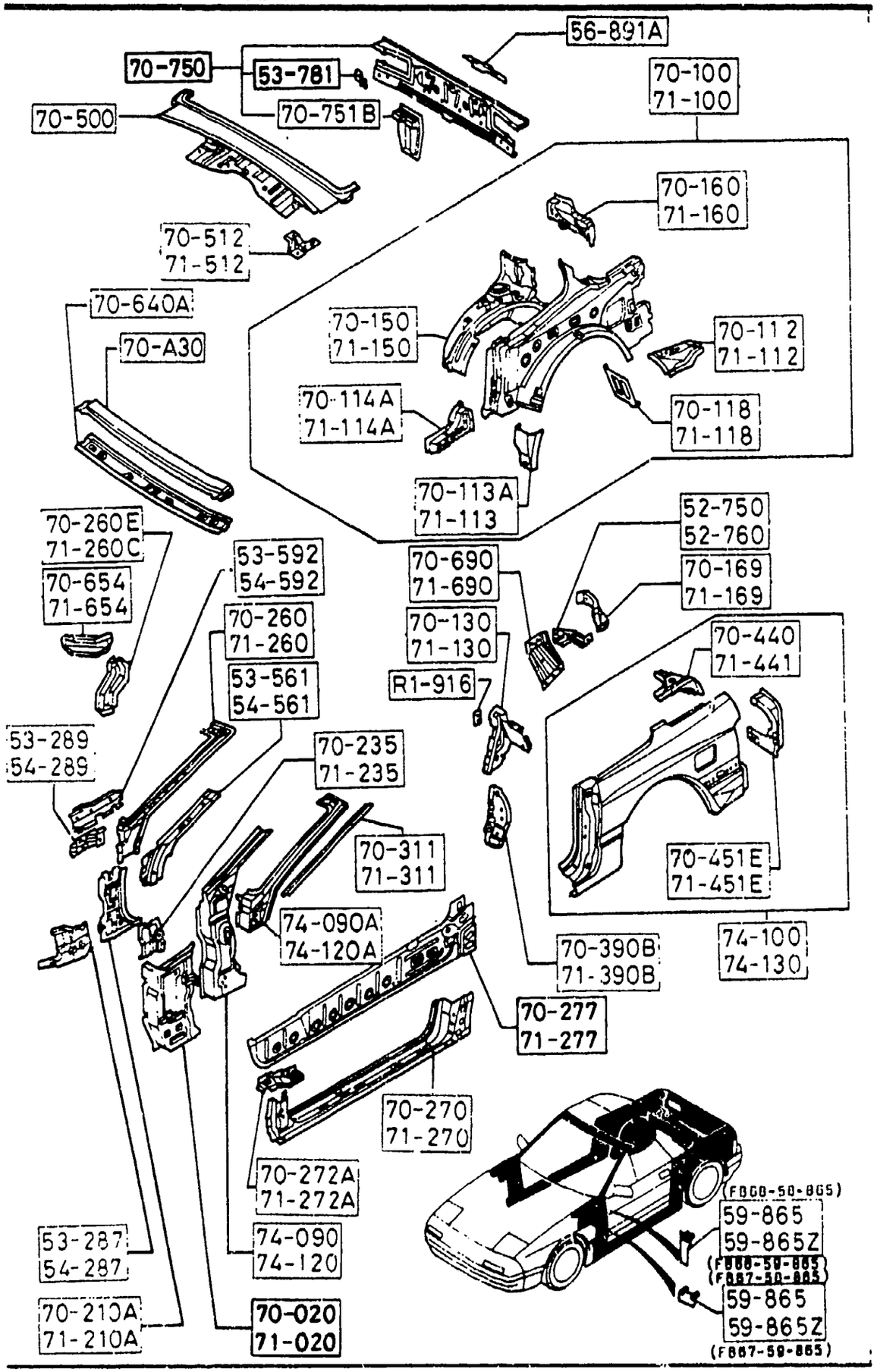


AUFA02

5340A -3 BODY PANELS (SIDE)
(CONVERTIBLE)

| PART NO. | QTY | MODEL/RESTRICTION | MODEL/RESTRICTION | MODEL/RESTRICTION | FROM-TO |
|---|---|---|---|---|---|
| 70-169<br>FB67-70-169A | 1 | REINF.(R),QTR PANEL-REAR | | | |
| 70-210A<br>FB67-70-020C | 1 | PILLAR(R),HINGE | | | |
| 70-235<br>FB67-5[illegible]-698 | 1 | GUSSET(R),HINGE PILLER | | | |
| 70-260<br>FB67-70-240B | 1 | PILLAR(R),FRT.-INNER | | | |
| 70-260E<br>FB67-70-260 | 1 | BRKT(R),INST. | | | |
| 70-270<br>FC33-70-270 | 1 | PANEL(R),SIDE SILL | | | |
| 70-272A<br>FB67-70-272 | 1 | PLATE(R),FIXING-SIDE SILL | | | |
| 70-277<br>FC33-53-790 | 1 | REINF.(R),SIDE SILL | | | |
| 70-311<br>FB67-70-222A | 1 | RAIL(R),RAIN | | | |
| 70-390B<br>FB67-70-420 | 1 | REINF.(R),STRIKER | | | |
| 70-440<br>FB67-70-441A | 1 | PLATE(R),CORNER | | | |
| 70-451E<br>FB67-70-491A | 1 | HOUSING(R),LAMP-RR FENDER | | | |
| 70-500<br>FB67-70-500D | 1 | TRAY,PACKAGE | | | |
| 70-512<br>FB67-70-512 | 1 | BRACKET(R),TRIM-QTR PANEL | | | |

CAT. AUFA02-06

1992-05

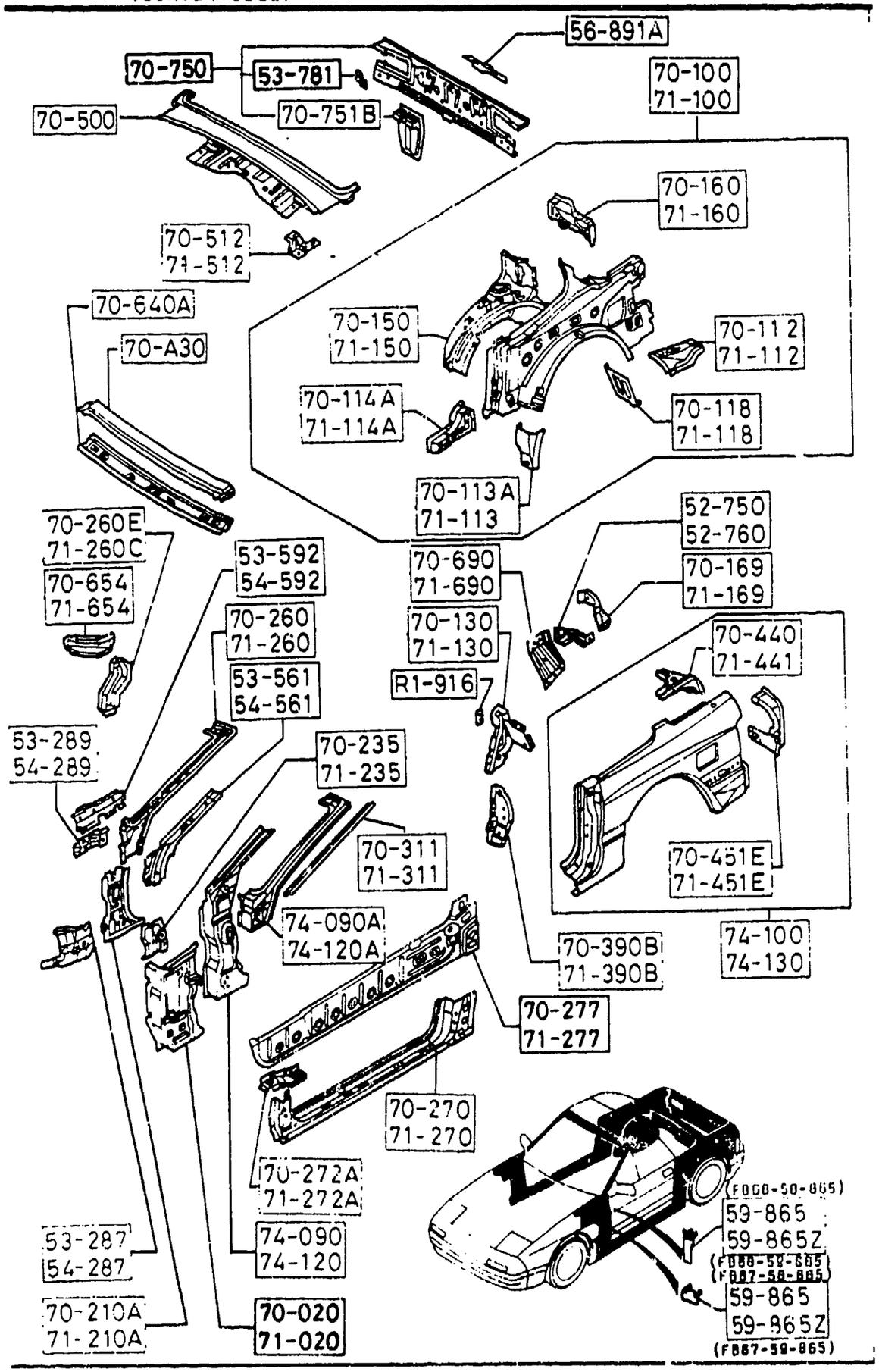


AUFA02



| PART NO. | QTY | MODEL/RESTRICTION | MODEL/RESTRICTION | MODEL/RESTRICTION | FROM-TO |
|---|---|---|---|---|---|
| 70-640A<br>FB67-70-640A | 1 | HEADER,FRONT-INNER | | | |
| 70-654<br>FB67-70-654 | 1 | GUSSET(L),INST.PANEL -DASH | | | |
| 70-690<br>FB67-70-690A | 1 | GUSSET(R),WHEEL HOUS E | | | |
| 70-750<br>FC33-70-750A | 1 | PANEL,REAR END | | | |
| 70-751B<br>FB67-70-752 | 1 | MEMBER,REAR END | | | |
| 71-020<br>FB67-71-230C | 1 | PANEL(L),COWL SIDE | | | |
| 71-100<br>FC33-71-100<br>AN(FC33-71-100A) | 1 | PANEL(L),QUARTER | | | -9601 |
| FC33-71-100A | 1 | | | | 9601- |
| 71-112<br>FB01-71-112D | 1 | PANEL(RR ,L),QUARTER -LOW. | | | |
| 71-113<br>FB67-71-113 | 1 | PLATE(L),SEAL | | | |
| 71-114A<br>FB67-71-114 | 1 | JUNCTION(L),CORNER-Q /PANE | | | |
| 71-118<br>FB01-71-118A | 1 | PROTECTOR(L),SPLASH | | | |
| 71-130<br>FB67-71-130D | 1 | BRKT(L),FORMING BAR | | | |
| 71-150<br>FB67-71-150B<br>AN(FB67-71-150C) | 1 | PANEL(L),WHEEL HOUSE | | | -9601 |

9601 FC3####-708021

CAT. AUFA02-06

1992-05

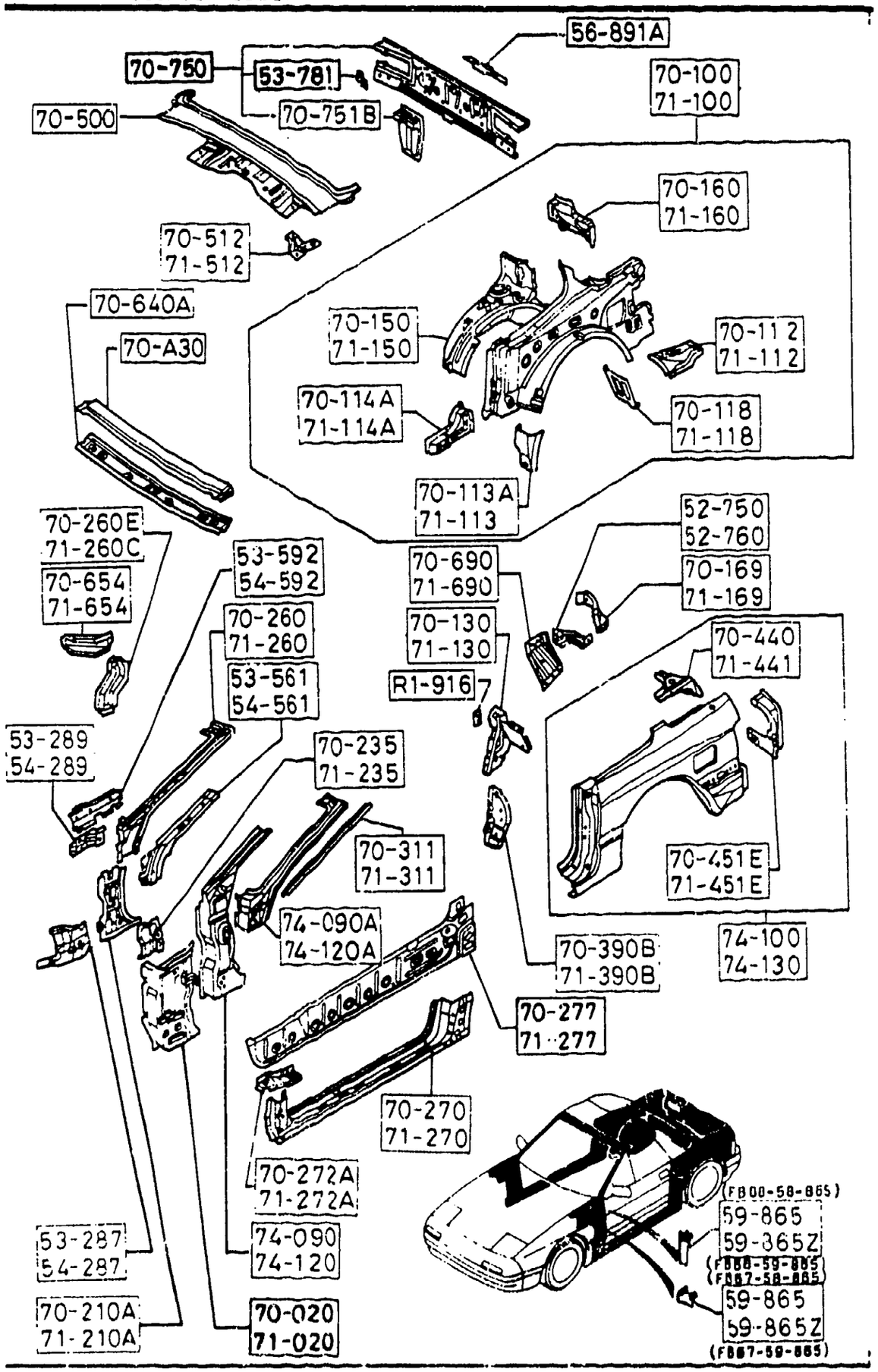


AUFA02



| PART NO. | QTY | MODEL/RESTRICTION | MODEL/RESTRICTION | MODEL/RESTRICTION | FROM-TO |
|---|---|---|---|---|---|
| CONT'D | | | | | |
| FB67-71-150C | 1 | | | | 9601-9C01 |
| A (FB67-71-150D) | | | | | |
| FB67-71-150D | 1 | | | | 9C01- |
| 71-160 | | PLATE(L),REAR CORNER -IN. | | | |
| FB67-71-160B | 1 | | | | |
| 71-169 | | REINF.(L),QTR PANEL-REAR | | | |
| FB67-71-169A | 1 | | | | |
| 71-210A | | PILLAR(L),HINGE | | | |
| FB67-71-020C | 1 | | | | |
| 71-235 | | GUSSET(L),HINGE PILLER | | | |
| FB67-54-698 | 1 | | | | |
| 71-260 | | PILLAR(L),FRT.-INNER | | | |
| FB67-71-240B | 1 | | | | |
| 71-260C | | BRKT(L),INST. | | | |
| FB67-71-260 | 1 | | | | |
| 71-270 | | PANEL(L),SIDE SILL | | | |
| FC33-71-270 | 1 | | | | |
| 71-272A | | PLATE(L),FIXING-SIDE SILL | | | |
| FB67-71-272 | 1 | | | | |
| 71-277 | | REINF.(L),SIDE SILL | | | |
| FC33-54-790 | 1 | | | | |
| 71-311 | | RAIL(L),RAIN | | | |
| FB67-71-222A | 1 | | | | |
| 71-390B | | REINF.(L),STRIKER | | | |
| FB67-71-420 | 1 | | | | |
| 71-441 | | PLATE(L),CORNER | | | |
| FB67-71-441A | 1 | | | | |
| 71-451E | | HOUSING(L),LAMP-RR FENDER | | | |

9601 FC3####-708021
9C01 FC3####-804800

CAT. AUFA02-06

1992-05

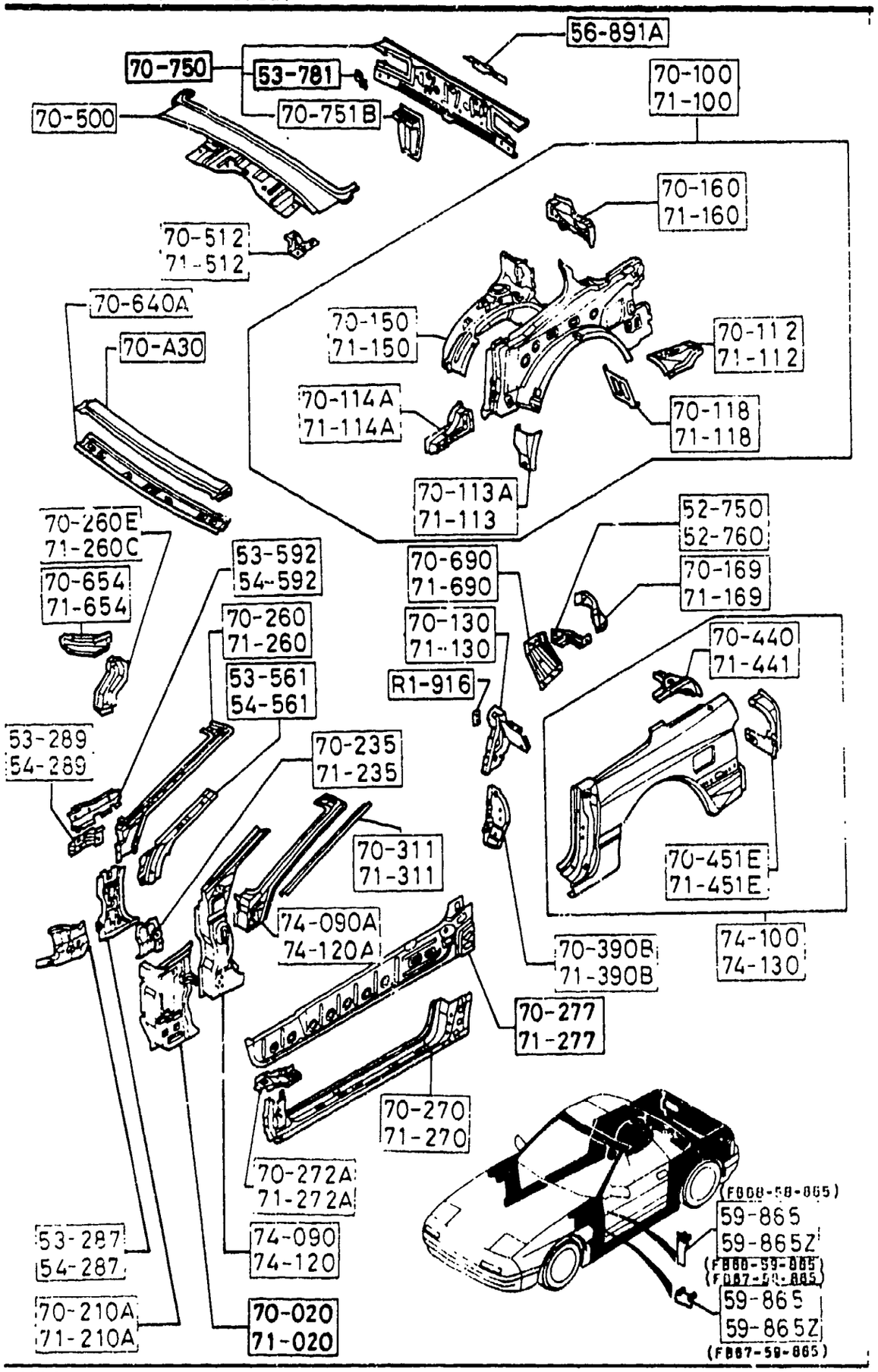


AUFA02



| PART NO. | QTY | MODEL/RESTRICTION | MODEL/RESTRICTION | MODEL/RESTRICTION | FROM-TO |
|---|---|---|---|---|---|
| CONT'D | | | | | |
| FB67-71-491A | 1 | | | | |
| +----------+ | | | | | |
| \| 71-512 \| | | BRACKET(L),TRIM-QTR PANEL | | | |
| +----------+ | | | | | |
| FB67-71-512 | 1 | | | | |
| +----------+ | | | | | |
| \| 71-654 \| | | GUSSET(L),INST.PANEL -DASH | | | |
| +----------+ | | | | | |
| FB67-71-654 | 1 | | | | |
| +----------+ | | | | | |
| \| 71-690 \| | | GUSSET(L),WHEEL HOUS E | | | |
| +----------+ | | | | | |
| FB67-71-690A | 1 | | | | |
| +----------+ | | | | | |
| \| 74-090 \| | | PILLAR(R),HINGE OUT. | | | |
| +----------+ | | | | | |
| FB67-70-210A | 1 | | | | |
| +----------+ | | | | | |
| \| 74-090A \| | | PILLAR(R),FRONT-OUT. | | | |
| +----------+ | | | | | |
| FB67-70-220C | 1 | | | | |
| +----------+ | | | | | |
| \| 74-100 \| | | PANEL(R),FENDER-REAR | | | |
| +----------+ | | | | | |
| FC33-70-400 | 1 | | | | |
| +----------+ | | | | | |
| \| 74-120 \| | | PILLAR(L),HINGE-OUT. | | | |
| +----------+ | | | | | |
| FB67-71-210A | 1 | | | | |
| +----------+ | | | | | |
| \| 74-120A \| | | PILLAR(L),FRONT-OUT. | | | |
| +----------+ | | | | | |
| FB67-71-220C | 1 | | | | |
| +----------+ | | | | | |
| \| 74-130 \| | | PANEL(L),FENDER-REAR | | | |
| +----------+ | | | | | |
| FC33-71-400 | 1 | | | | |

CAT. AUFA02-06

1992-05

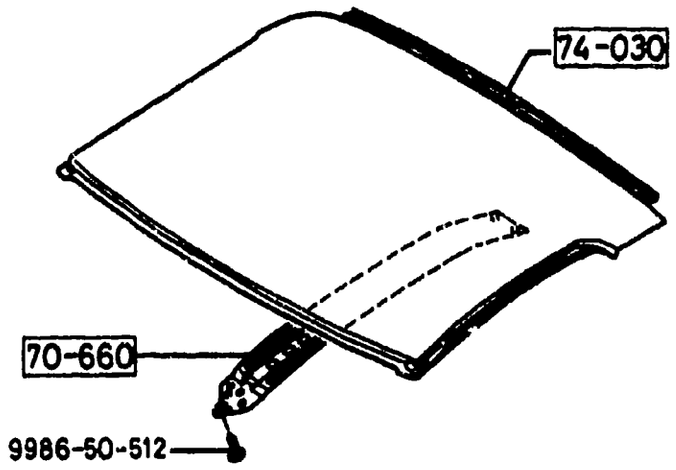


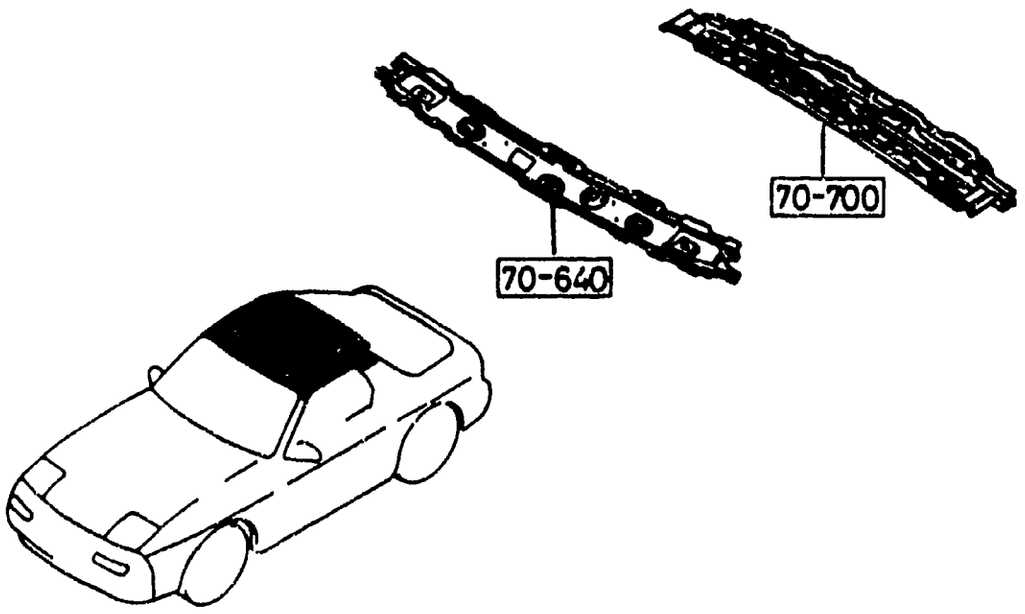




| PART NO. | QTY | MODEL/RESTRICTION | MODEL/RESTRICTION | MODEL/RESTRICTION | FROM-TO |
|---|---|---|---|---|---|
| 70-640 | | HEADER,FRONT | | | |
| FB01-70-640A | 1 | | | | |
| 70-660 | | REINFORCEMENT,ROOF | | | |
| FB01-70-609A | 1 | | | | |
| 70-700 | | HEADER,REAR | | | |
| FC01-70-700 | 1 | | | | |
| 74-030 | | PANEL,ROOF | | | |
| FC01-70-601 | 1 | | | | |

5360 A BODY PANELS (ROOF)
(SUN ROOF)

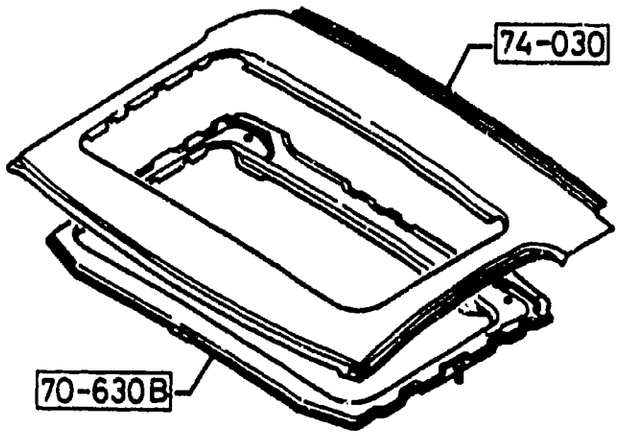


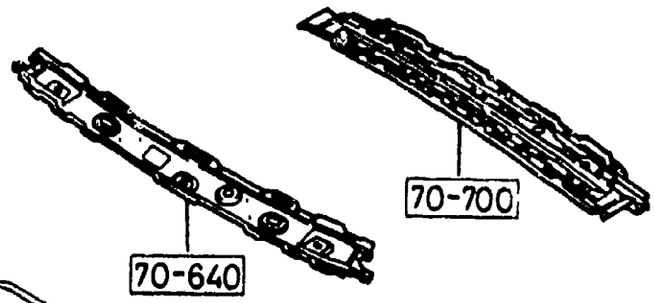


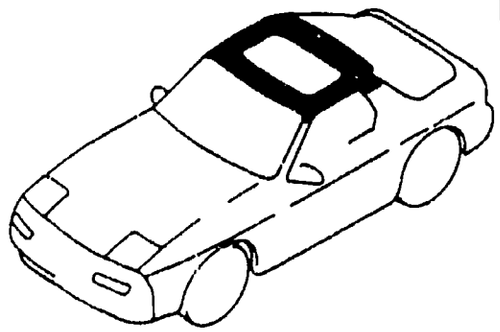

5360 A-1 * BODY PANELS (ROOF)
(SUN ROOF)

| PART NO. | QTY | MODEL/RESTRICTION | MODEL/RESTRICTION | MODEL/RESTRICTION | FROM-TO |
|---|---|---|---|---|---|
| 70-630B | | PLATE,FIXING | | | |
| FB03-70-630E | 1 | | | | |
| 70-640 | | HEADER,FRONT | | | |
| FB01-70-640A | 1 | | | | |
| 70-700 | | HEADER,REAR | | | |
| FC01-70-700 | 1 | | | | |
| 74-030 | | PANEL,ROOF | | | |
| FC03-70-601 | 1 | | | | |

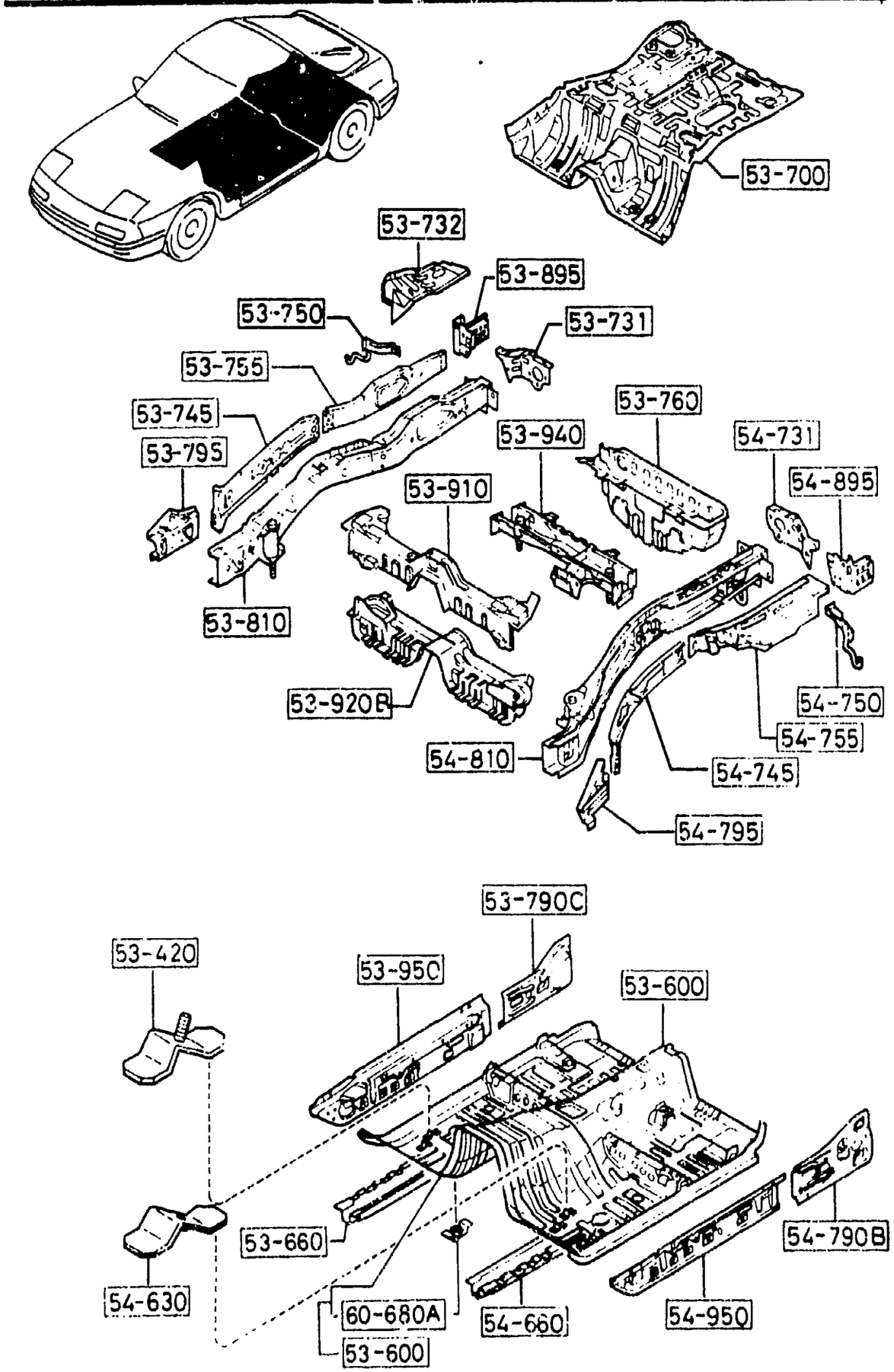


AUFA02



| PART NO. | QTY | MODEL/RESTRICTION | MODEL/RESTRICTION | MODEL/RESTRICTION | FROM-TO |
|---|---|---|---|---|---|
| 53-420 | | BRKT'A',CONTROL UNIT | | | |
| FB01-53-685 | 2 | | | | |
| 53-600 | | PAN,FLOOR-FRONT | | | |
| FC01-53-600 | 1 | (MT) | | | |
| FC07-53-600 | 1 | (AT) | | | |
| 53-660 | | FRAME(RR.R),FRONT | | | |
| FC01-53-660 | 1 | | | | |
| 53-700 | | PAN,FLOOR-REAR | | | |
| FC01-53-710 AN(FC01-53-710A) | 1 | | | | -9201 |
| FC01-53-710A | 1 | | | | 9201- |
| 53-731 | | PLATE(R),SEAL-RR S/FRAME | | | |
| FB01-53-731B | 1 | | | | |
| 53-732 | | PANEL(R),SIDE-RR FLOOR | | | |
| FB01-53-732A (FB01-53-732A) | 1 | | | | -9A01 |
| FB01-53-732A | 1 | | | | 9A01- |
| 53-745 | | PLATE'A'(R),CLOSING-FRT | | | |
| FC01-53-74X | 1 | | | | |
| 53-750 | | BRKT(R),SILENCER-S/PANEL | | | |
| FB01-53-750B | 1 | | | | |
| 53-755 | | PLATE'A'(R),CLOSING-RR | | | |
| FC01-53-75Y | 1 | | | | |
| 53-760 | | PAN,SPARE TIRE | | | |
| FB01-53-760G AN(FB01-53-760H) | 1 | | | | -9107 |
| FB01-53-760H | 1 | | | | 9107- |
| 53-790C | | PLATE'B'(R),CLOSING-FRAME | | | |
| FC01-53-790 | 1 | | | | |
| 53-795 | | PLATE'C'(R),CLOSING-FRAME | | | |

9107 FC3***-700067
9201 FC3***-701886
9A01 FC3***-803554

CAT. AUFA02-06

1992-05

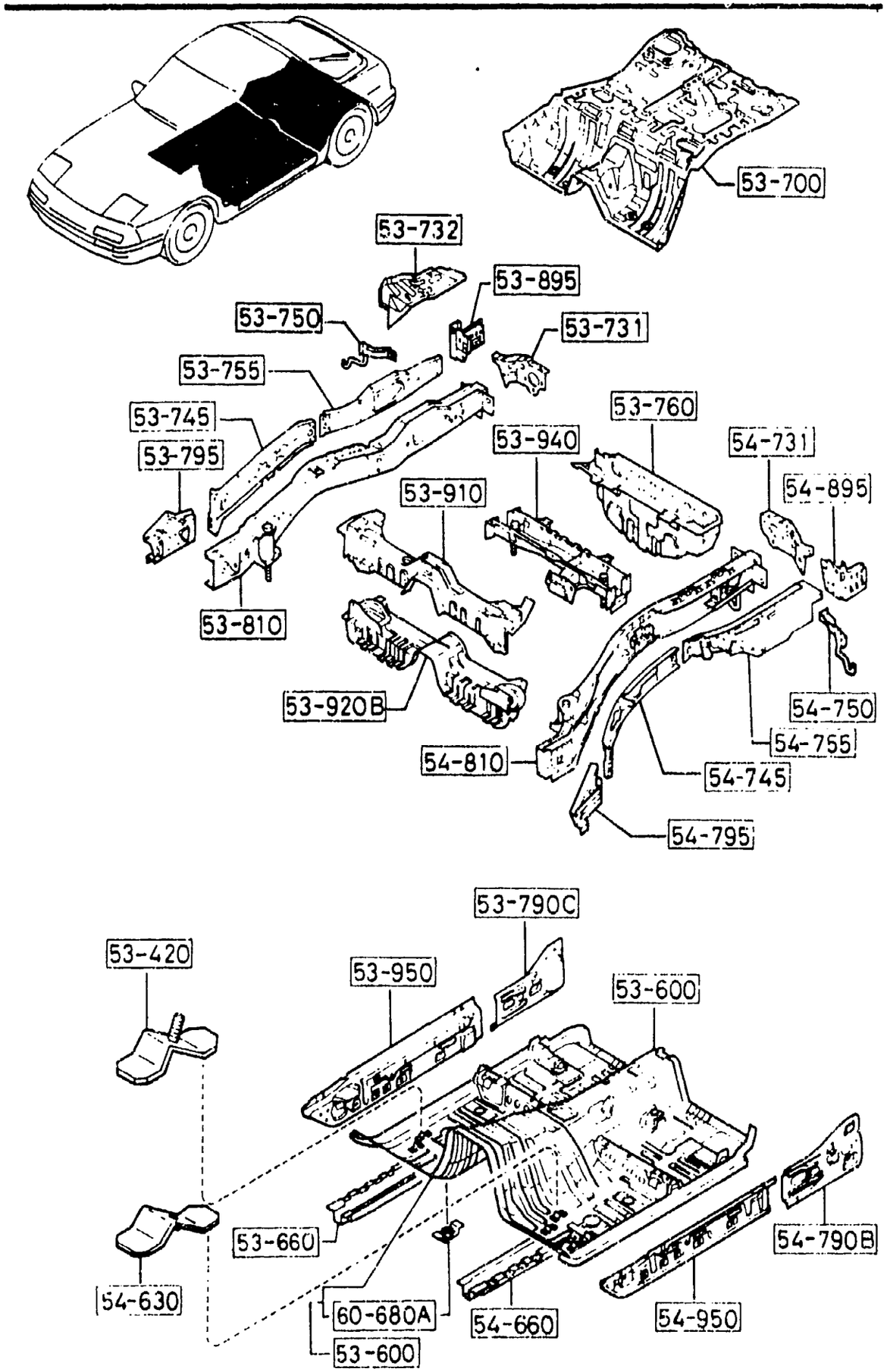






| PART NO. | QTY | MODEL/RESTRICTION | MODEL/RESTRICTION | MODEL/RESTRICTION | FROM-TO |
|---|---|---|---|---|---|
| CONT'D | | | | | |
| FB01-53-796 | 1 | | | | |
| 53-810 | | FRAME(R),REAR SIDE | | | |
| FC01-53-810 | 1 | | | | |
| 53-895 | | GASSET(R),LOCK TOWER | | | |
| FB01-53-895B | 1 | | | | |
| 53-910 | | MEMBER NO.3,CROSS-UPPER | | | |
| FC01-53-910 A (FC66-53-91X ) | 1 | | | | -9A01 |
| FC66-53-91X | 1 | | | | 9A01- |
| 53-920B | | MEMBER NO.3,CROSS-LOWER | | | |
| FC01-53-920 | 1 | | | | |
| 53-940 | | MEMBER NO.4,CROSS | | | |
| FC01-53-930 A (FC01-53-930A) | 1 | | | | -9113 |
| FC01-53-930A | 1 | | | | 9113- |
| 53-950 | | PANEL(R),SIDE SILL | | | |
| FB01-53-951 | 1 | | | | |
| 54-630 | | BRKT'B',CONTROL UNIT | | | |
| FB01-54-685 | 2 | | | | |
| 54-660 | | FRAME(RR.L),FRONT | | | |
| FC01-54-660 | 1 | | | | |
| 54-731 | | PLATE(L),SEAL-RR S/FRAME | | | |
| FB01-54-731B | 1 | | | | |
| 54-745 | | PLATE'A'(L),CLOSING-FRT | | | |
| FC01-54-74X | 1 | | | | |
| 54-750 | | BRKT(L),SILENCER-S/PANEL | | | |
| FB01-54-750B | 1 | | | | |
| 54-755 | | PLATE'A'(L),CLOSING-RR | | | |
| FC01-54-75Y | 1 | | | | |

9113 FC3***-700067
9A01 FC3***-803554

| LO.NO | SEC.NO | SECTION NAME |
|---|---|---|
| 3-C03 | 0900 | KEY SETS |
| 3-F03 | 5000 | FRONT BUMPER |
| 3-H03 | 5010 | REAR BUMPER |
| 3-J03 | 5020 | HEAD LAMP CLEANER |
| 3-L03 | 5030 | WINDOW MOULDINGS |
| 3-M03 | 5040 | BODY MOULDINGS (COUPE) |
| 3-E04 | 5060 | SIDE PROTECTORS |
| 3-I04 | 5100 | HEAD LAMPS |
| 3-J04 | 5103 | HEAD LAMP RETRACTORS |
| 3-N04 | 5105 | FRONT COMBINATION LAMPS |
| 3-G05 | 5110 | REAR COMBINATION LAMPS |
| 3-K05 | 5120 | LICENSE LAMPS |
| 3-M05 | 5125 | INTERIOR LAMPS |
| 3-N05 | 5130 | OVERHEAD CONSOLE |
| 3-C06 | 5170 | ORNAMENTS |
| 3-D06 | 5180 | COWL & EXTRACTOR GRILLES |
| 3-G06 | 5230 | BONNET |
| 3-J06 | 526J | TRUNK LID (CONVERTIBLE) |
| 3-L06 | 5310 | BODY PANELS (FRONT) (COUPE) |
| 3-C07 | 5310 A | BODY PANELS (FRONT) (CONVERTIBLE) |
| 3-F07 | 5320 | BODY PANELS (FENDER & WHEEL APRON) |
| 3-K07 | 5330 | BODY PANELS (DASH & COWL PANEL) |
| 3-L07 | 5340 | BODY PANELS (SIDE) (COUPE) |
| 3-E08 | 5340A | BODY PANELS (SIDE) (CONVERTIBLE) |
| 3-K08 | 5360 | BODY PANELS (ROOF) (W/O SUN ROOF) |
| 3-L08 | 5360 A | BODY PANELS (ROOF) (SUN ROOF) |
| 3-M08 | 5370 | BODY PANELS (FLOOR) (COUPE) |
| 3-D09 | 5370 A | BODY PANELS (FLOOR) (CONVERTIBLE) |
| 3-H09 | 5380 | FLOOR ATTACHMENTS (HOLE COVERS) |
| 3-J09 | 5390 | FLOOR ATTACHMENTS |
| 3-C10 | 5500 | DASHBOARD EQUIPMENTS |
| 3-F10 | 5520 | METER HOOD |
| 3-G10 | 5530 | SPEEDOMETER CABLE |
| 3-H10 | 5540 | METER COMPONENTS |
| 3-J10 | 5560 | DASHBOARD & RELATED PARTS |
| 3-E11 | 5570 | CONSOLE |
| 3-H11 | 5580 | VENTILATOR |
| 3-J11 | 5700 | FRONT SEATS (COUPE) |
| 3-E13 | 5700A | FRONT SEATS (CONVERTIBLE) |
| 3-K13 | 5750 | REAR SEATS (COUPE) |
| 3-M13 | 5790 | SEAT BELTS (COUPE) |
| 3-C14 | 5790A | SEAT BELTS (CONVERTIBLE) |
| 3-D14 | 5800 | FRONT DOORS (COUPE) |
| 3-G14 | 5800A | FRONT DOORS (CONVERTIBLE) |
| 3-K14 | 5830 | FRONT DOOR MECHANISMS (COUPE) |
| 3-F15 | 5830A | FRONT DOOR MECHANISMS (CONVERTIBLE) |
| 3-J15 | 5840 | FRONT DOOR TRIMS & RELATED PARTS (COUPE) |
| 3-H16 | 5840A | FRONT DOOR TRIMS & RELATED PARTS (CONVERTIBLE) |

| LO.NO | SEC.NO | SECTION NAME |
|---|---|---|

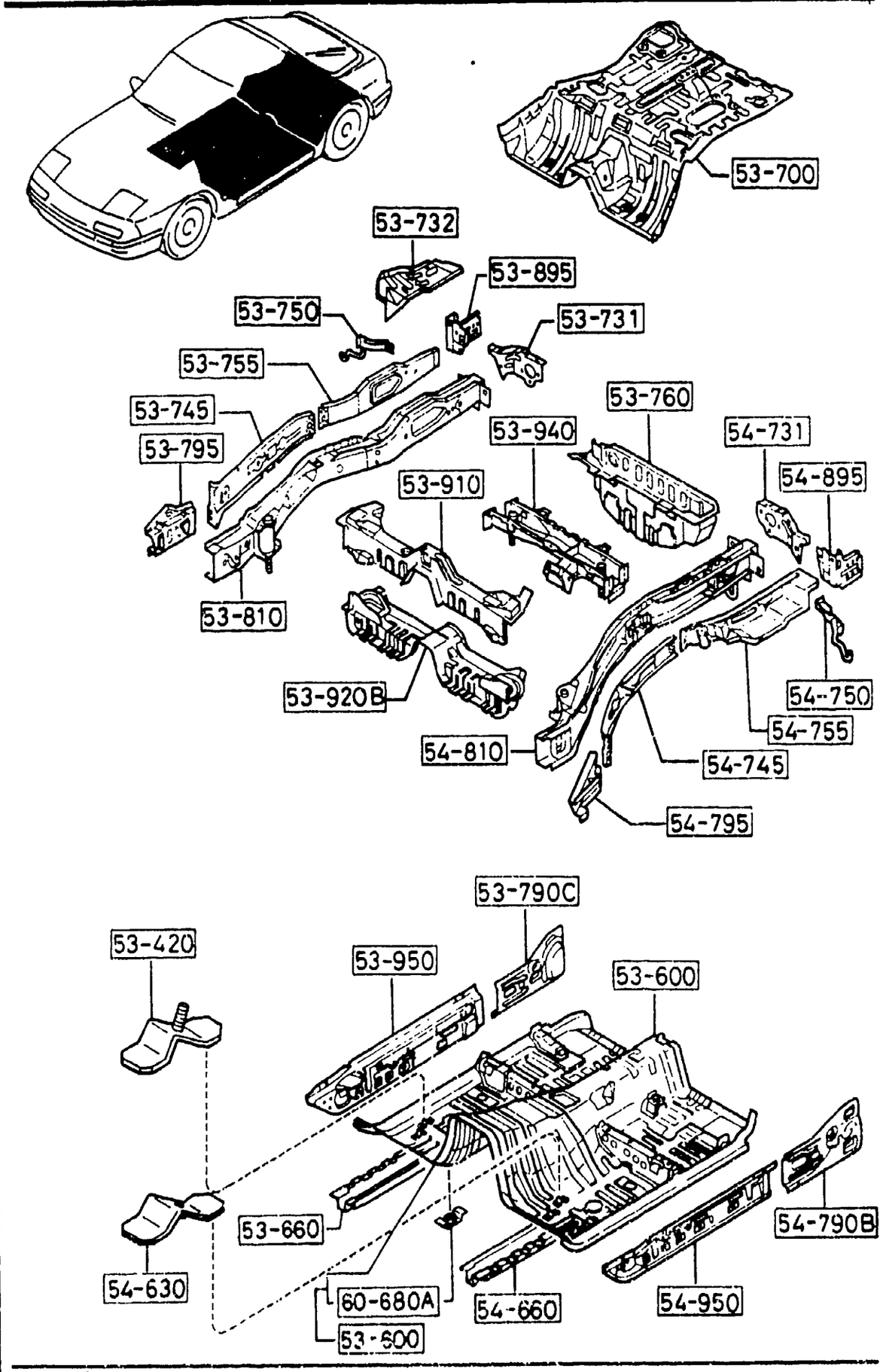


AUFA02



| PART NO. | QTY | MODEL/RESTRICTION | MODEL/RESTRICTION | MODEL/RESTRICTION | FROM-TO |
|---|---|---|---|---|---|
| 54-790B<br>FC01-54-790 | 1 | PLATE'B'(L),CLOSING-FRAME | | | |
| 54-795<br>FB01-54-796 | 1 | PLATE'C'(L),CLOSING-FRAME | | | |
| 54-810<br>FC01-54-810<br>A (FC01-54-810A) | 1 | FRAME(L),REAR SIDE | | | -9A01 |
| FC01-54-810A | 1 | | | | 9A01- |
| 54-895<br>FB01-54-895B | 1 | GUSSET(L),LOCK TOWER | | | |
| 54-950<br>FB01-54-950 | 1 | PANEL(L),SIDE SEAL | | | |
| 60-680A<br>*0305-53-160 | 9 | BRACKET,FLOOR | | | |

9A01 FC3####-803554

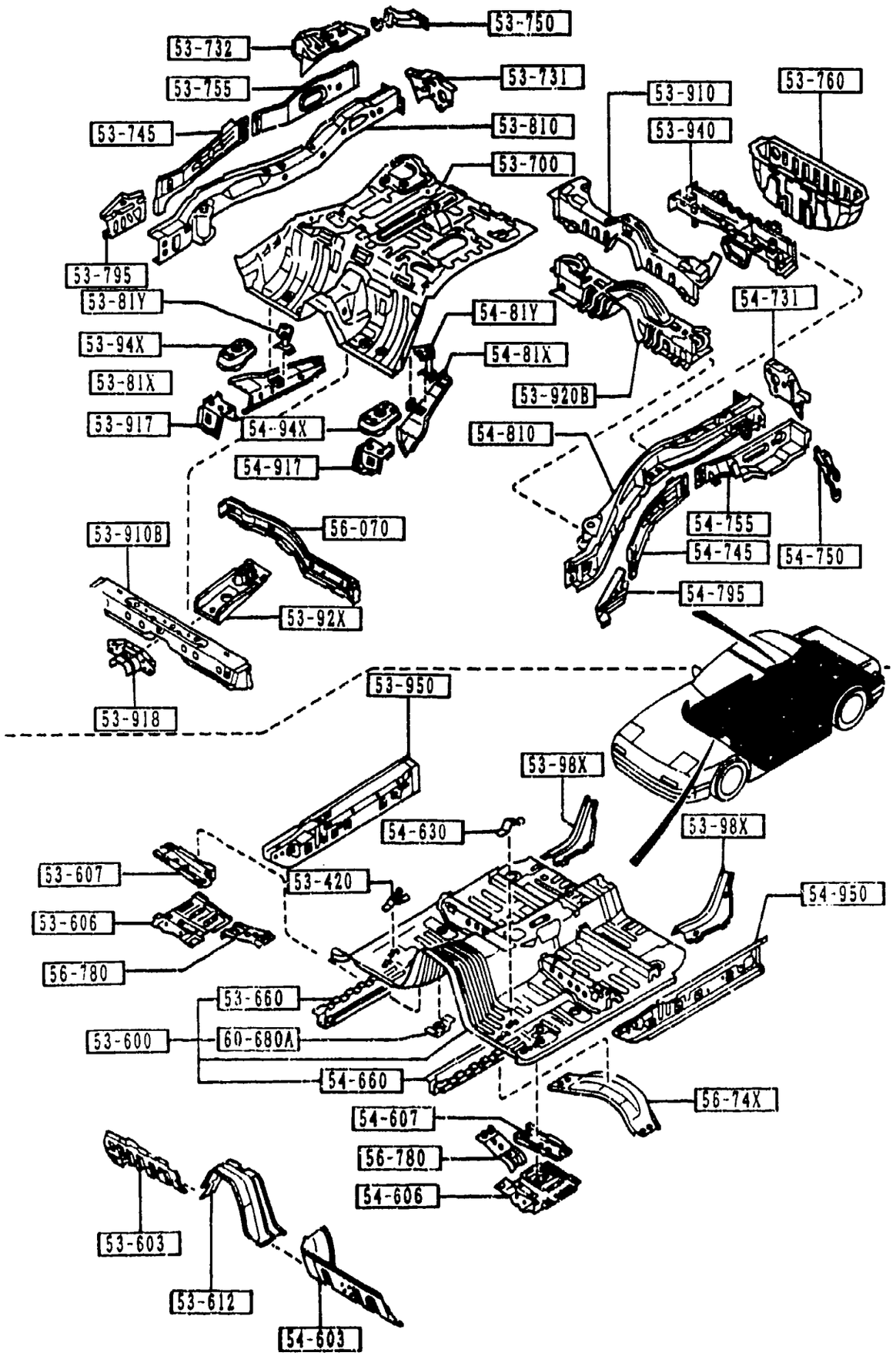


AUFA02



| PART NO. | QTY | MODEL/RESTRICTION | MODEL/RESTRICTION | MODEL/RESTRICTION | FROM-TO |
|---|---|---|---|---|---|
| 53-420 | | BRKT'A',CONTROL UNIT | | | |
| FB01-53-685 | 2 | | | | |
| 53-600 | | PAN,FLOOR-FRONT | | | |
| FC33-53-600A | 1 | (MT) | | | |
| FC47-53-600A | 1 | (AT) | | | |
| 53-603 | | REINF.'A'(R),FRONT FLOOR | | | |
| FB67-53-603A | 1 | | | | |
| 53-606 | | REINF.'B'(R),FRONT FLOOR | | | |
| FB67-53-606 | 1 | | | | |
| 53-607 | | REINF.'C'(R),FRONT FLOOR | | | |
| FB67-53-607A | 1 | | | | |
| 53-612 | | REINFORCEMENT,TONNEL-FRT | | | |
| FB67-53-612A | 1 | | | | |
| 53-660 | | FRAME(RR.R),FRONT | | | |
| FB67-53-660 | 1 | (MT) | | | |
| F056-53-660 | 1 | (AT) | | | |
| 53-700 | | PAN,FLOOR-REAR | | | |
| FC01-53-710 AN(FC01-53-710A) | 1 | | | | -9201 |
| FC01-53-710A | 1 | | | | 9201- |
| 53-731 | | PLATE(R),SEAL-RR S/FRAME | | | |
| FB01-53-731B | 1 | | | | |
| 53-732 | | PANEL(R),SIDE-RR FLOOR | | | |
| FB01-53-732A (FB01-53-732A) | 1 | | | | -9A01 |
| FB01-53-732A | 1 | | | | 9A01- |
| 53-745 | | PLATE'A'(R),CLOSING-FRT | | | |
| FC33-53-74X | 1 | | | | |
| 53-750 | | BRKT(R),SILENCER-S/PANEL | | | |
| FB67-53-750A | 1 | | | | |

9201 FC3#M#-701886
9A01 FC3#M#-803554

CAT. AUFA02-06

1992-05

5370 A BODY PANELS (FLOOR)
(CONVERTIBLE)

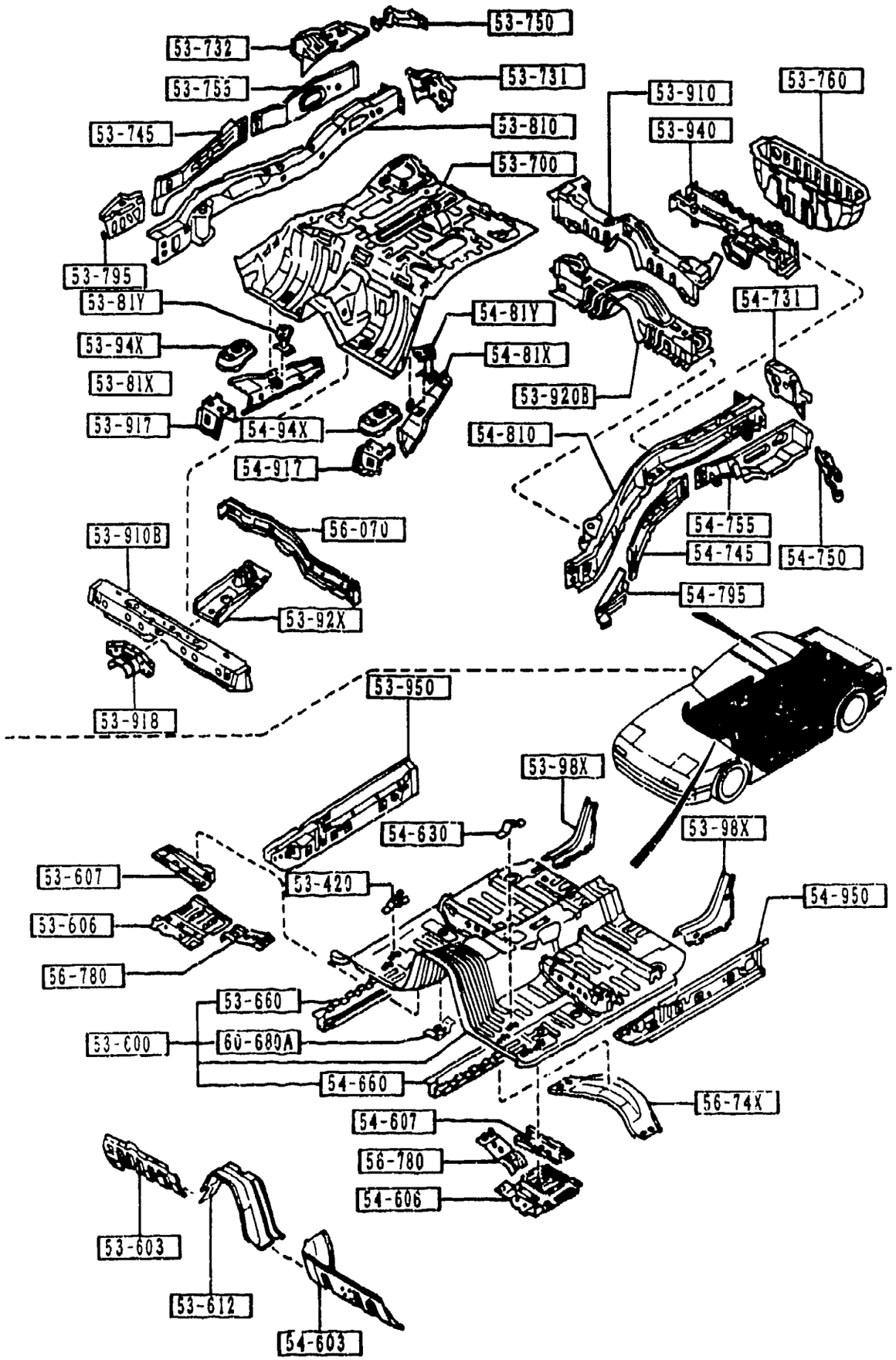


AUFA02

5370 A-2 BODY PANELS (FLOOR)
(CONVERTIBLE)

| PART NO. | QTY | MODEL/RESTRICTION | MODEL/RESTRICTION | MODEL/RESTRICTION | FROM-TO |
|---|---|---|---|---|---|
| 53-755 | | PLATE'A'(R),CLOSING-RR | | | |
| FC33-53-75X | 1 | | | | |
| 53-760 | | PAN,SPARE TIRE | | | |
| FB67-53-760A AN(FB67-53-760B) | 1 | | | | -9107 |
| FB67-53-760B | 1 | | | | 9107- |
| 53-795 | | PLATE'C'(R),CLOSING-FRAME | | | |
| FB01-53-796 | 1 | | | | |
| 53-81X | | FRAME(R),REAR SIDE-UPPER | | | |
| FB67-53-81XA | 1 | | | | |
| 53-81Y | | BRKT(R),STOPPER-R. FRAME | | | |
| FB67-53-81YA | 1 | | | | |
| 53-810 | | FRAME(R),REAR SIDE | | | |
| FC33-53-810 | 1 | | | | |
| 53-910 | | MEMBER NO.3,CROSS-UPPER | | | |
| FC01-53-910 A (FC66-53-91X ) | 1 | | | | -9A01 |
| FC66-53-91X | 1 | | | | 9A01- |
| 53-910B | | REINF.,CROSSMEMBER NO3-UP | | | |
| FB67-53-910B A (FC66-53-910 ) | 1 | | | | -9A01 |
| FC66-53-910 | 1 | | | | 9A01- |
| 53-917 | | REINF.(R),NO.3 MEMBER-UP. | | | |
| FB67-53-917 | 1 | | | | |
| 53-918 | | REINFORCEMENT,TUNNEL-REAR | | | |
| FB67-53-918 | 1 | | | | |
| 53-92X | | REINF.,SPARE TIRE | | | |
| FB67-53-92X | 1 | | | | |
| 53-920B | | MEMBER NO.3,CROSS-LOWER | | | |
| FC33-53-920 | 1 | | | | |

9107 FC3####-700067
9A01 FC3####-803554

CAT. AUFA02-06

1992-05

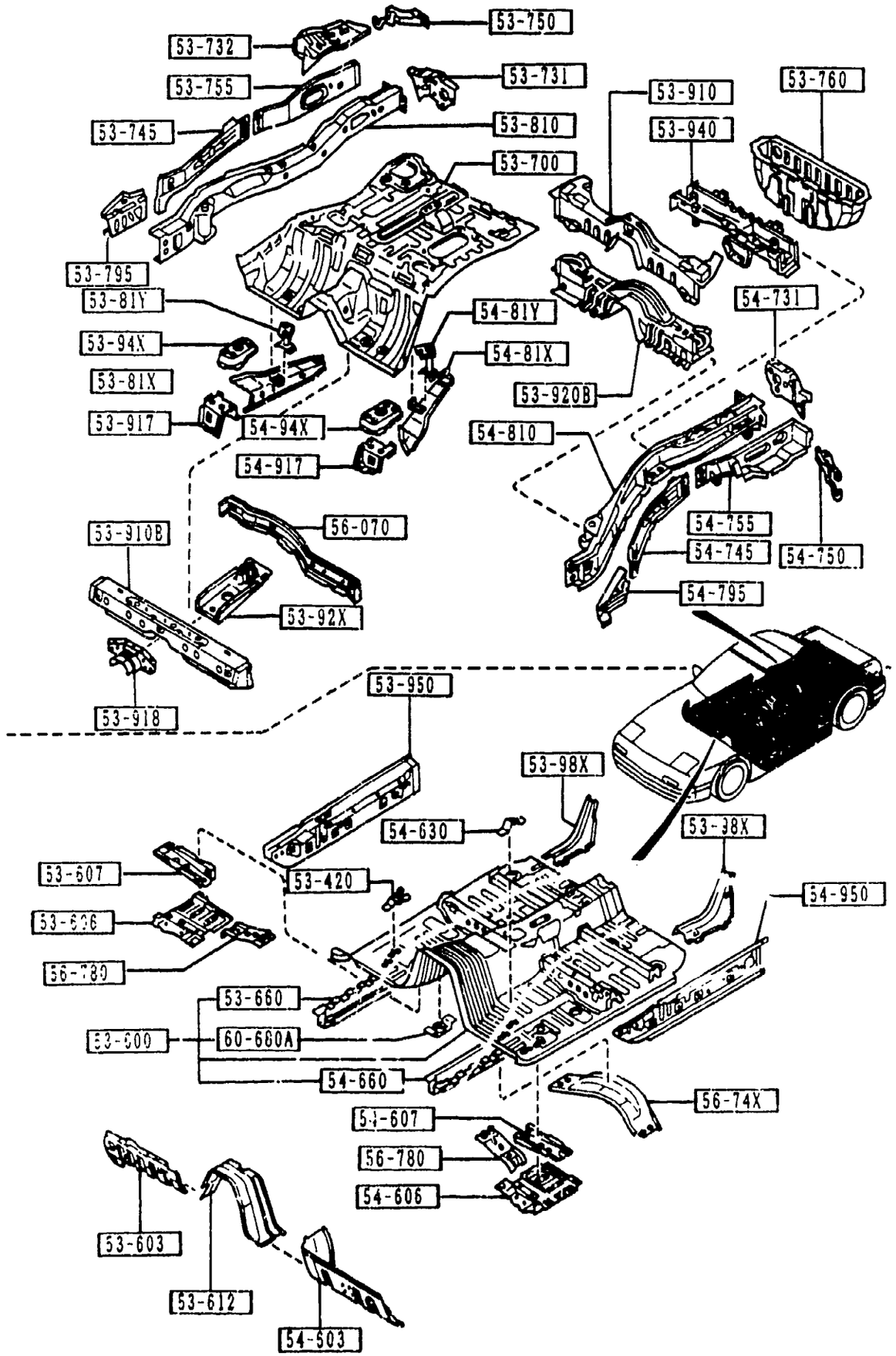




| PART NO. | QTY | MODEL/RESTRICTION | MODEL/RESTRICTION | MODEL/RESTRICTION | FROM-TO |
|---|---|---|---|---|---|
| 53-94X<br>FB67-53-94X | 1 | BRKT(R),MOTOR-SIDE FRAME | | | |
| 53-940<br>FC01-53-930A (FC01-53-930A) | 1 | MEMBER NO.4,CROSS | | | -9113 |
| FC01-53-930A | 1 | | | | 9113- |
| 53-950<br>FB67-53-950 | 1 | PANEL(R),SIDE SILL | | | |
| 53-98X<br>FB67-53-98XA | 2 | GUSSET,FRONT FLOOR PAN | | | |
| 54-603<br>FB67-54-603A | 1 | REINF.'A'(L),FRONT FLOOR | | | |
| 54-606<br>FB67-54-606 | 1 | REINF.'B'(L),FRONT FLOOR | | | |
| 54-607<br>FB67-54-607A | 1 | REINF.'C'(L),FRONT FLOOR | | | |
| 54-630<br>FB01-54-685 | 2 | BRKT'B',CONTROL UNIT | | | |
| 54-660<br>FB67-54-660 | 1 | FRAME(RR.L),FRONT | | | |
| 54-731<br>FB01-54-731B | 1 | PLATE(L),SEAL-RR S/FRAME | | | |
| 54-745<br>FC33-54-74X | 1 | PLATE'A'(L),CLOSING-FRT | | | |
| 54-750<br>FB67-54-750A | 1 | BRKT(L),SILENCER-S PANEL | | | |
| 54-755<br>FC33-54-75X | 1 | PLATE'A'(L),CLOSING-RR | | | |

9113 FC3####-700067

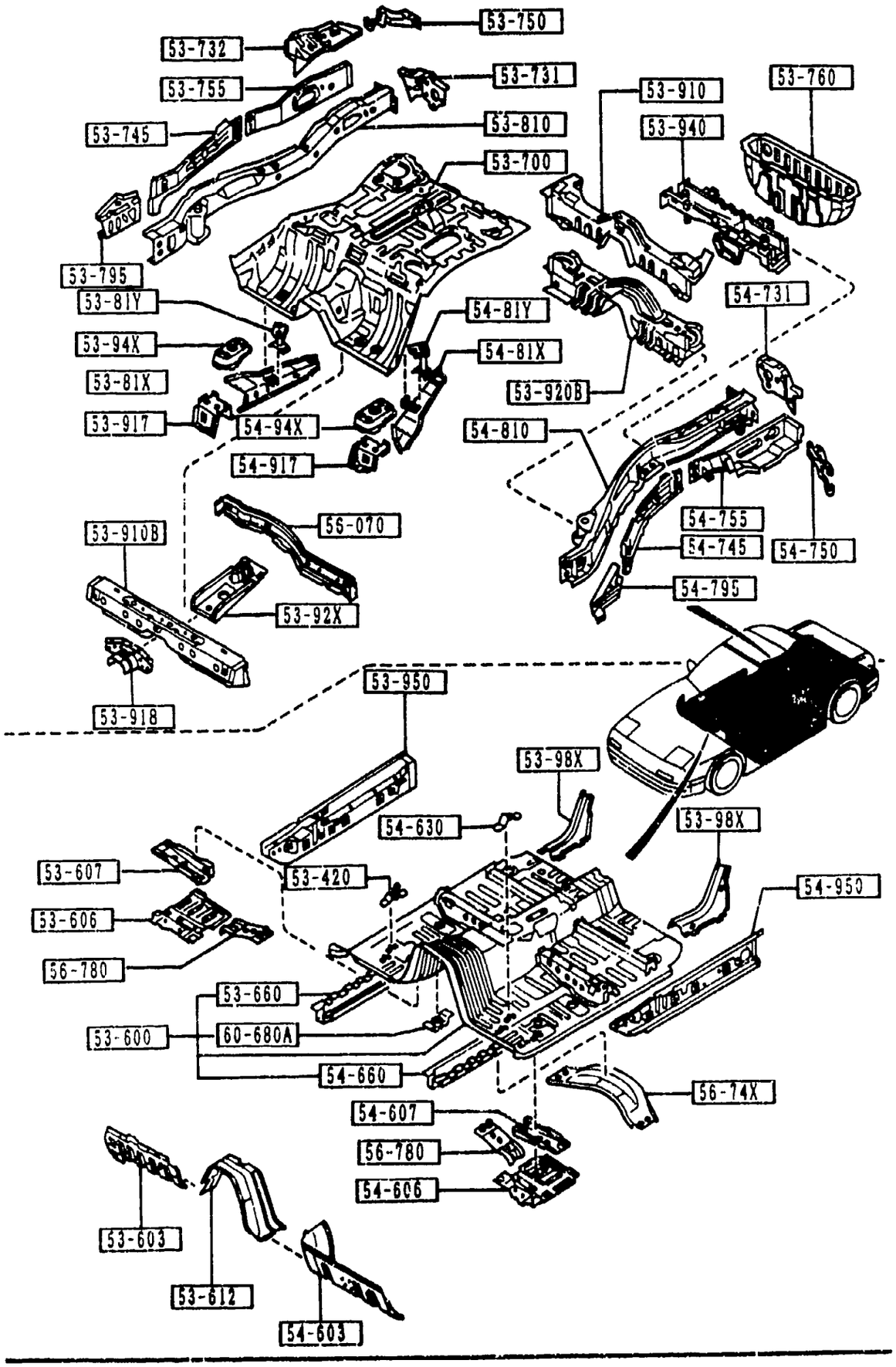


AUFA02



| PART NO. | QTY | MODEL/RESTRICTION | MODEL/RESTRICTION | MODEL/RESTRICTION | FROM-TO |
|---|---|---|---|---|---|
| 54-795 | | PLATE'C'(L),CLOSING-FRAME | | | |
| FB01-54-796 | 1 | | | | |
| 54-81X | | FRAME(L),REAR SIDE-UPPER | | | |
| FB67-54-81XA | 1 | | | | |
| 54-81Y | | BRKT(L),STUPPER-R. FRAME | | | |
| FB67-54-81YA | 1 | | | | |
| 54-810 | | FRAME(L),REAR SIDE | | | |
| FC33-54-810 A (FC33-54-810A) | 1 | | | | -9A01 |
| FC33-54-810A | 1 | | | | 9A01- |
| 54-917 | | REINF.(L),NO.3 MEMBER-UP. | | | |
| FB67-54-917 | 1 | | | | |
| 54-94X | | BRKT(L),MOTOR-SIDE FRAME | | | |
| FB67-54-94X | 1 | | | | |
| 54-950 | | PANEL(L),SIDE SEAL | | | |
| FB67-54-950 | 1 | | | | |
| 56-070 | | PANEL,BULK HEAD | | | |
| FB67-53-726A | 1 | | | | |
| 56-74X | | MEMBER,FRONT FLOOR | | | |
| FB67-56-74XA | 1 | (MT) | | | |
| 56-780 | | GUSSET,FRONT FLOOR | | | |
| FB67-56-780 | 1 | (AT) | | | |
| | 2 | (MT) | | | |
| 60-680A | | BRACKET,FLOOR | | | |
| ✱0305-53-160 | 8 | | | | |

9A01 FC3✱✱✱-803554

CAT. AUFA02-06

1992-05

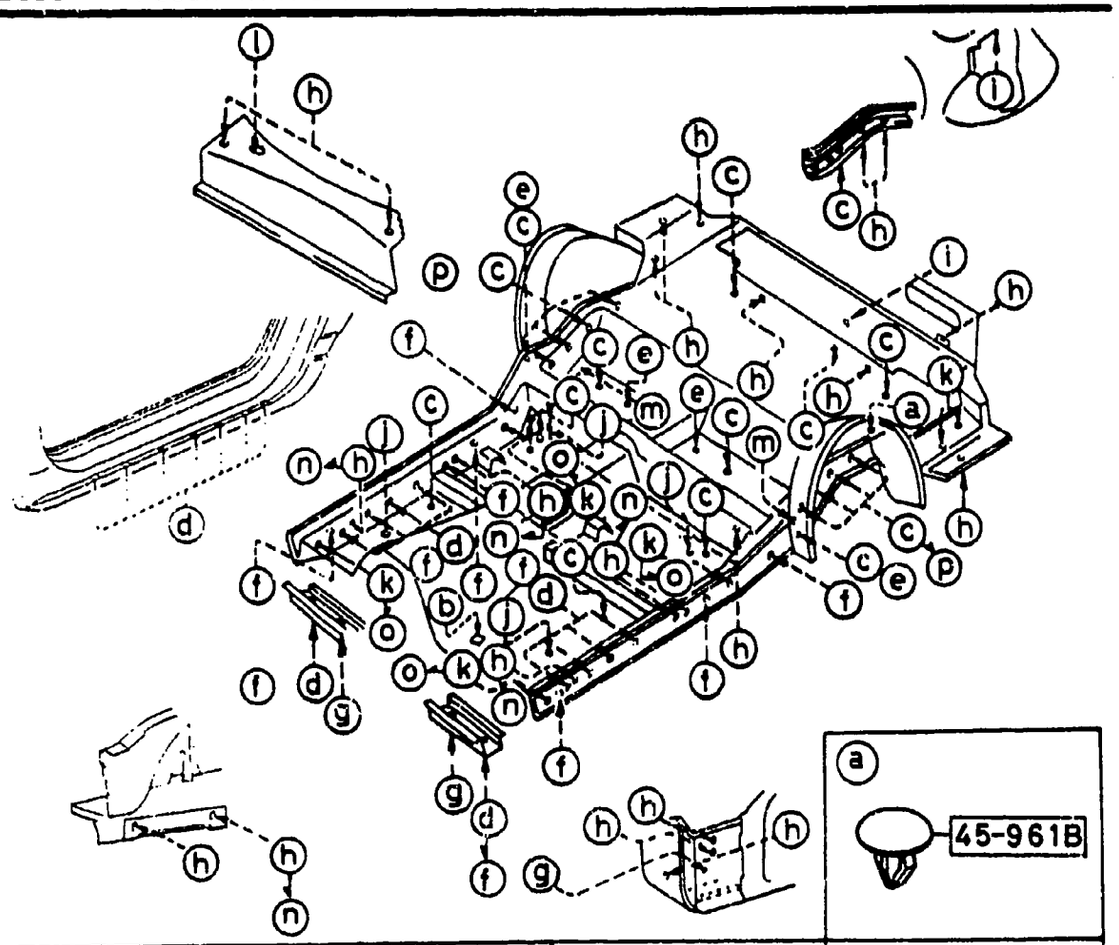

| | | |
|---|---|---|
| a 45-961B | b 56-051 | c 56-052 (F801-56-056) |
| d 56-054 | e 56-112B | f 56-241B |
| g 56-241J | h 56-242 | i 56-639 |
| j 56-971 | k 66-971K | l 67-365 |
| m 67-506B | n 56-052 (B092-56-052) | o 56-052A |
| p 62-868A | | |

AUFA02



| PART NO. | QTY | MODEL/RESTRICTION | MODEL/RESTRICTION | MODEL/RESTRICTION | FROM-TO |
|---|---|---|---|---|---|
| 45-961B | | CAP | | | |
| H002-45-961 | 1 | (CONVERTIBLE) | | | |
| 56-051 | | COVER,HOLE | | | |
| 1011-56-051 | 2 | | | | |
| 56-052 | | PLUG,DRAIN | | | |
| FB01-56-056 | 21 | (CPE) | | | -9501 |
| FB01-56-056 | 21 | (CONVERTIBLE) | | | -9726 |
| B092-56-052 | | D=12MM | | | |
| | 6 | | | | 9501- |
| FB01-56-056 | 11 | (CPE) | | | 9501- |
| 56-052A | | PLUG,HOLE-F.SIDE FRAME | | | |
| H260-56-052 | 2 | (CONVERTIBLE) | | | 9501- |
| | 4 | (CPE) | | | 9501- |
| 56-054 | | PLUG,HOLE | | | |
| FB67-56-051 | 24 | (CONVERTIBLE) | | | |
| 56-112B | | PLUG,DRAIN | | | |
| FB01-56-057 | 2 | (CONVERTIBLE) | | | |
| | 4 | (CPE) | | | |
| 56-241B | | PLUG | | | |
| B001-56-051 | 16 | (CPE) | | | -9501 |
| B001-56-051 | 18 | (CPE) | | | 9501- |
| 56-241J | | PLUG,DRAIN | | | |
| 8477-56-241 | 2 | (CPE) | | | |
| | 4 | (CONVERTIBLE) | | | |
| 56-242 | | PLUG,DRAIN | | | |
| 0118-56-242B | 28 | (CONVERTIBLE) | | | -9501 |
| | 30 | (CPE) | | | -9501 |
| 0118-56-242B | 22 | (CONVERTIBLE) | | | 9501- |
| | 24 | (CPE) | | | 9501- |
| 56-639 | | COVER,SERVICE HOLE | | | |

9501 FC3####-707092
9726 FC3####-800035

CAT. AUFA02-06

1992-03

5380 -2 M FLOOR ATTACHMENTS (HOLE COVERS)

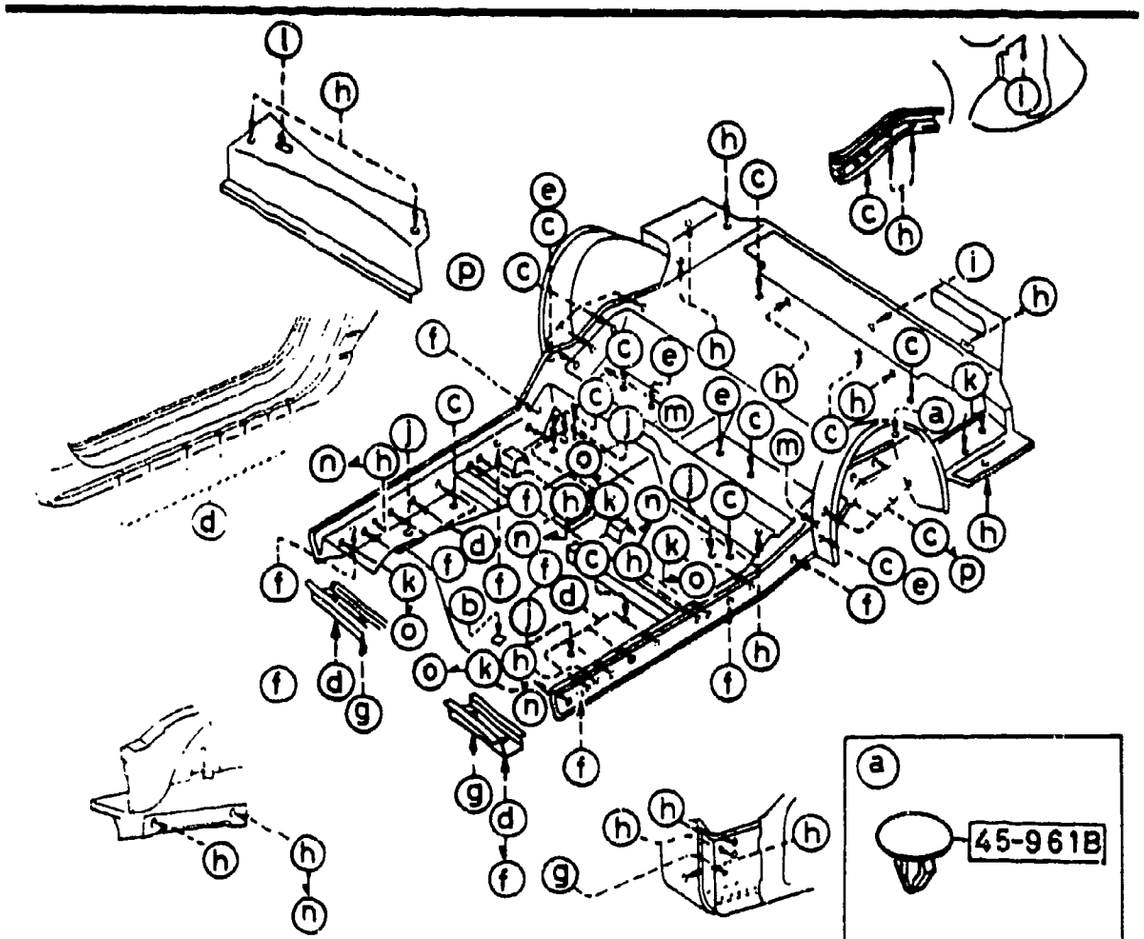

| | | | | | |
|---|---|---|---|---|---|
| a 45-961B | | | | | |
| b 56-051 | c 56-052 (FB01-56-056) | d 56-054 | e 56-112B | | |
| f 56-241B | g 56-241J | h 56-242 | i 56-639 | | |
| j 56-971 | k 66-971K | l 67-365 | m 67-506B | | |
| n 56-052 (B092-56-052) | o 56-052A | p 62-868A | | | |

| PART NO. | QTY | MODEL/RESTRICTION | MODEL/RESTRICTION | MODEL/RESTRICTION | FROM-TO |
|---|---|---|---|---|---|
| CONT'D | | | | | |
| 0810-56-639 | 1 | (CONVERTIBLE) | | | |
| | 3 | (CPE) | | | |
| +---------+ | | | | | |
| \| 56-971 \| | | COVER,HOLE | | | |
| +---------+ | | | | | |
| 0866-56-971 | 4 | | | | -9726 |
| +---------+ | | | | | |
| \| 62-868A \| | | COVER,HOLE-LIFT GATE | | | |
| +---------+ | | | | | |
| B499-62-868 | 8 | (CPE) | | | 9501- |
| +---------+ | | | | | |
| \| 66-971K \| | | GROMMET | | | |
| +---------+ | | | | | |
| 0222-66-971 | 6 | | | | -9501 |
| 0222-66-971 | 2 | (CPE) | | | 9501- |
| | 4 | (CONVERTIBLE) | | | 9501- |
| +---------+ | | | | | |
| \| 67-365 \| | | COVER,SEAL-COWL PANEL | | | |
| +---------+ | | | | | |
| FB31-56-058 | 1 | | | | -9726 |
| +---------+ | | | | | |
| \| 67-506B \| | | COVER,SERVICE HOLE | | | |
| +---------+ | | | | | |
| G043-67-506 | 2 | (CONVERTIBLE) | | | |

9501 FC3NNN-707092
9726 FC3NNN-800035

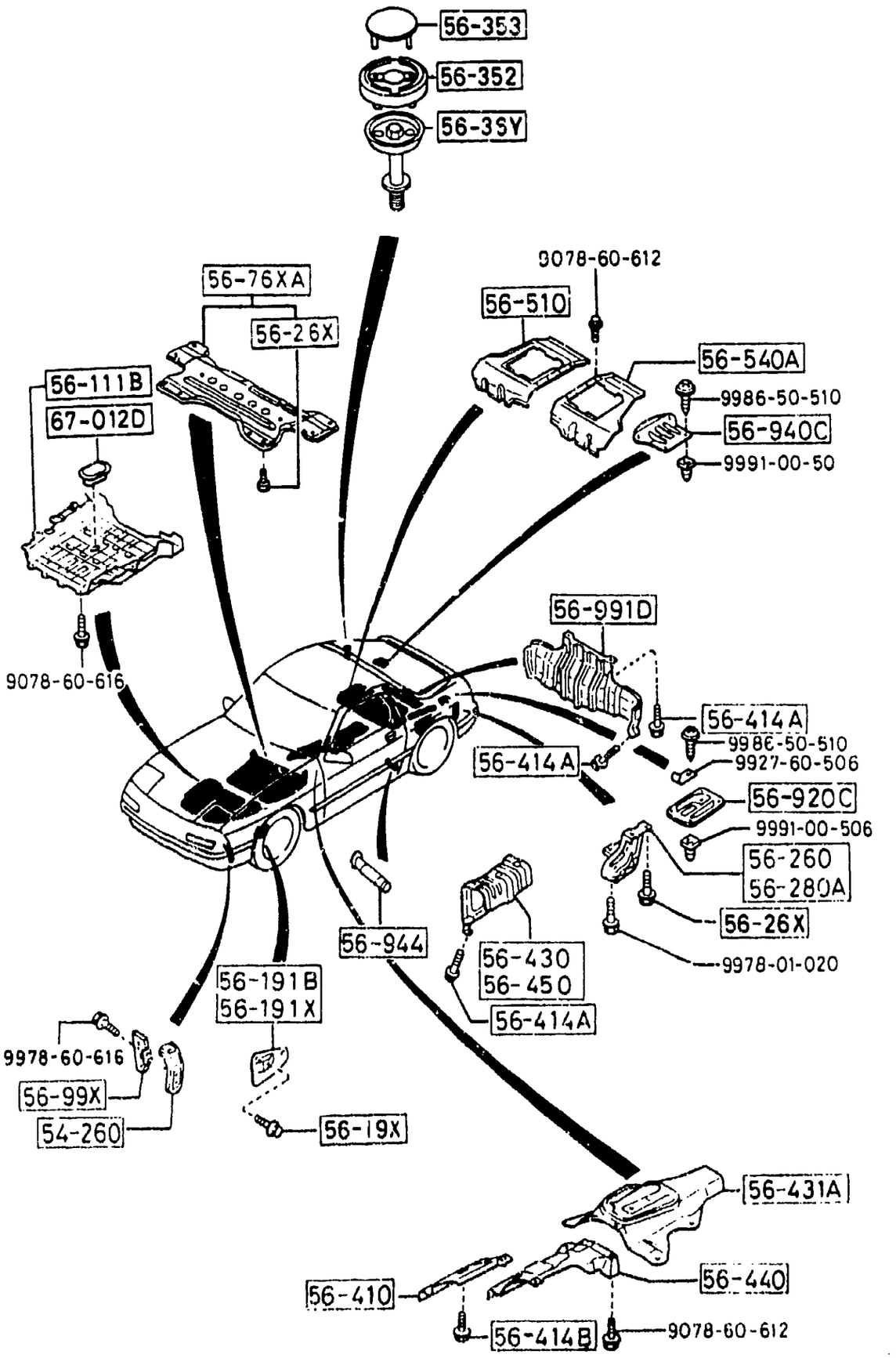


AUFA02

| PART NO. | QTY | MODEL/RESTRICTION | MODEL/RESTRICTION | MODEL/RESTRICTION | FROM-TO |
|---|---|---|---|---|---|
| 54-260 | | BRACKET,BATTERY | | | |
| FB01-56-990B | 1 | | | | |
| 56-111B | | COVER,UNDER-FRONT | | | |
| FB01-56-111C | 1 | | | | |
| 56-19X | | BOLT,SPLASH SHIELD | | | |
| FB01-56-19XA | 4 | | | | |
| 56-191B | | SHIELD(L),SPLASH-S. FRAME | | | |
| FB01-56-191A | 1 | | | | |
| 56-191X | | SHIELD(R),SPLASH-S. FRAME | | | |
| FB01-56-192A | 1 | | | | |
| 56-26X | | BOLT,REAR HOOK | | | |
| FB01-56-26X | 10 | (CPE) | | | |
| | 18 | (CONVERTIBLE) | | | |
| 56-260 | | HOOK(R),REAR | | | |
| FB01-56-260C | 1 | | | | |
| 56-280A | | HOOK(L),REAR | | | |
| FB01-56-280C | 1 | | | | |
| 56-352 | | SEAL(L),DUST | | | |
| FB67-56-352A | 2 | (CONVERTIBLE) | | | |
| 56-353 | | TRAY(UP.),LOCK HOOK | | | |
| FB67-56-353A | 2 | (CONVERTIBLE) | | | |
| 56-36Y | | BOLT,LOWER TRAY-STOP .8RKT | | | |
| FB67-56-36YA | 2 | (CONVERTIBLE) | | | |
| 56-410 | | INSULATOR,HEAT-FRONT | | | |
| FB01-56-410B | 1 | | | | |
| 56-414A | | BOLT,SILENCER | | | |
| FB01-56-416 | 10 | | | | |

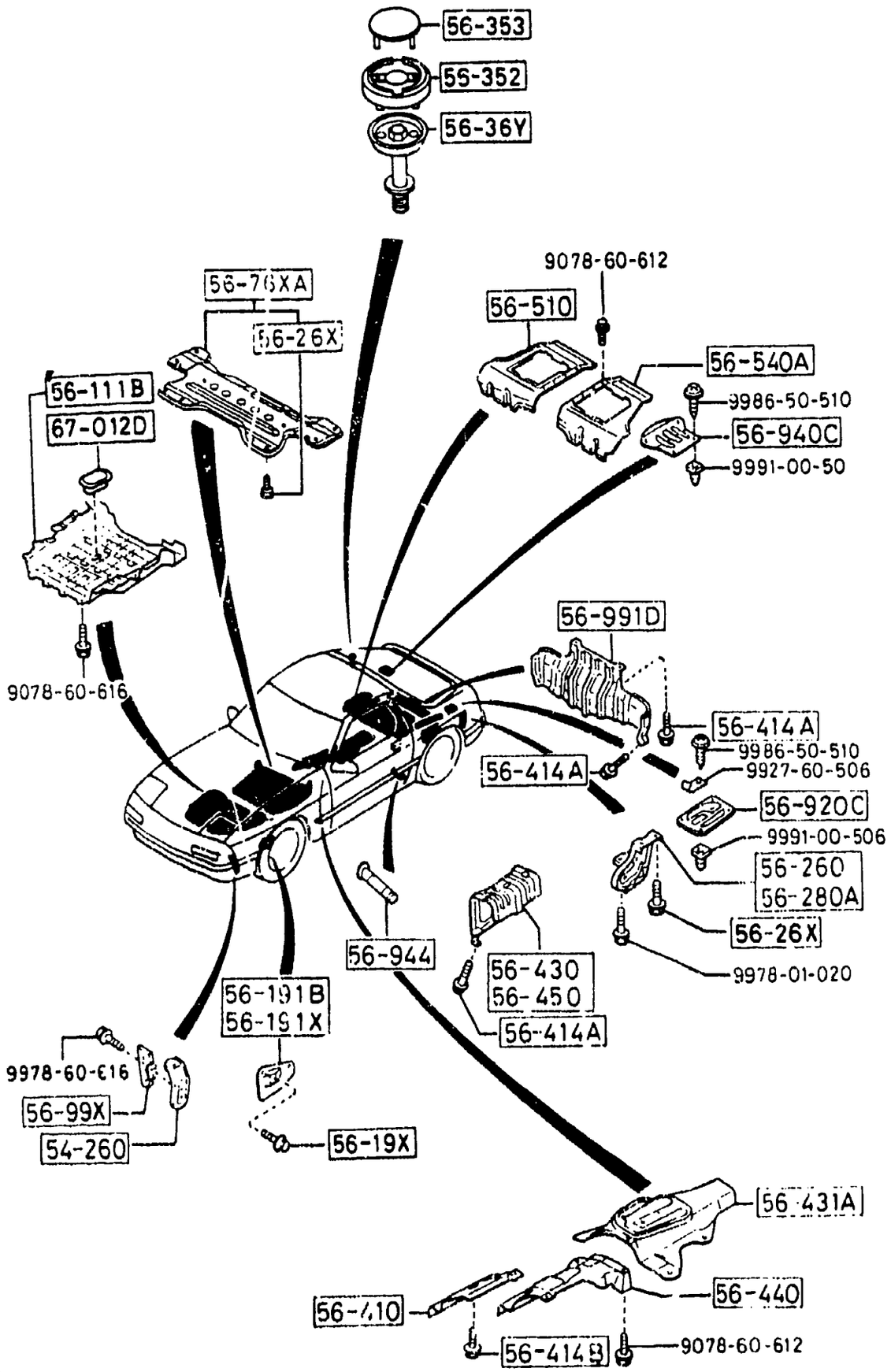


| PART NO. | QTY | MODEL/RESTRICTION | MODEL/RESTRICTION | MODEL/RESTRICTION | FROM-TO |
|---|---|---|---|---|---|
| 56-414B<br>FB01-56-414 | 11 | BOLT,INSHLATOR-FRT HEAT | | | |
| 56-430<br>FB01-56-460C<br>A (FB01-56-460D) | 1 | INSULATOR(R) | | | -9801 |
| FB01-56-460D | 1 | | | | 9801- |
| 56-431A<br>FB01-56-430C | 1 | INSULATOR NO.3,FRONT | | | |
| 56-440<br>FB01-56-420A | 1 | INSULATOR NO.2,FRONT | | | |
| 56-450<br>FB01-56-450C<br>A (FB01-56-450D) | 1 | INSULATOR(L) | | | -9801 |
| FB01-56-450D | 1 | | | | 9801- |
| 56-510<br>FC01-56-510A | 1 | DECK(R),FLOOR<br>((CPE))(2SEATER) ) | | | |
| 56-540A<br>FC01-56-521A | 1 | DECK(L),FLOOR<br>((CPE))(2SEATER) ) | | | |
| 56-76XA<br>FB67-56-76XB | 1 | MEMBER,CROSS-FRONT FRAME<br>(CONVERTIBLE) | | | |
| 56-920C<br>FB01-56-920 | 1 | COVER (L),SERVICE-RR FLOOR | | | |
| 56-940C<br>FB01-56-940 | 1 | COVER (R),SERVICE-RR FLOOR | | | |
| 56-944<br>FB01-56-944 | 2 | COLLAR,HARNESS-SIDE SILL<br>(CONVERTIBLE) | | | |
| 56-99X<br>FC01-56-99X | 1 | SEAL,SIDE FRAME&BATT .BRKT | | | |
| 56-991D | | INSULATOR,TANK-FUEL | | | |

9801 FC3####-800894

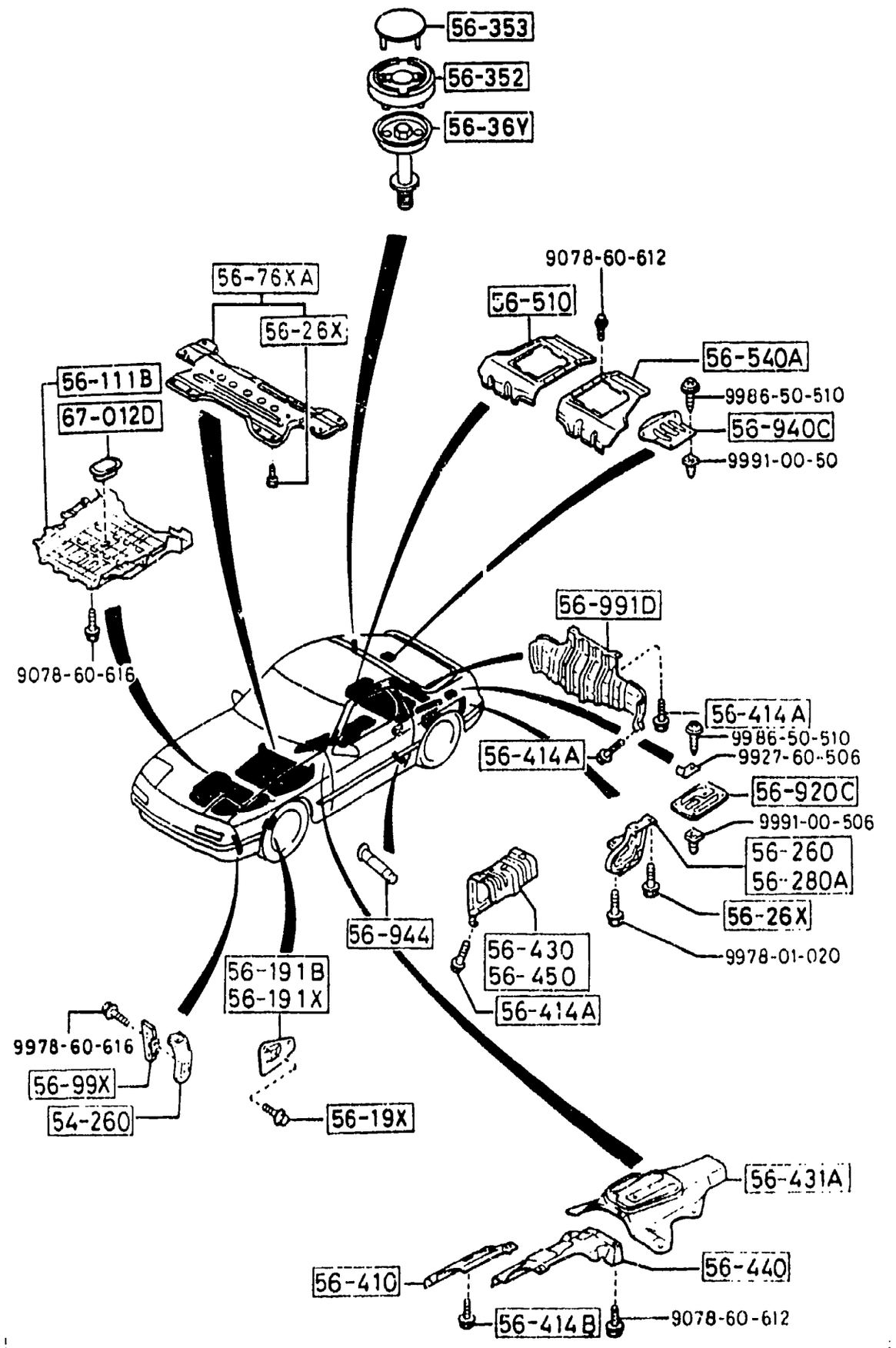


| PART NO. | QTY | MODEL/RESTRICTION | MODEL/RESTRICTION | MODEL/RESTRICTION | FROM-TO |
|---|---|---|---|---|---|
| CONT'D | | | | | |
| FB71-56-470 | 1 | | | | |
| +---------+ | | | | | |
| \| 67-012D \| | | GROMMET | | | |
| +---------+ | | | | | |
| S083-67-012A | 1 | | | | |

SECTION NAME INDEX (BODY)1/2

| LO.NO | SEC.NO | SECTION NAME |
|---|---|---|
| 3-C03 | 0900 | KEY SETS |
| 3-F03 | 5000 | FRONT BUMPER |
| 3-H03 | 5010 | REAR BUMPER |
| 3-J03 | 5020 | HEAD LAMP CLEANER |
| 3-L03 | 5030 | WINDOW MOULDINGS |
| 3-M03 | 5040 | BODY MOULDINGS (COUPE) |
| 3-E04 | 5060 | SIDE PROTECTORS |
| 3-I04 | 5100 | HEAD LAMPS |
| 3-J04 | 5103 | HEAD LAMP RETRACTORS |
| 3-N04 | 5105 | FRONT COMBINATION LAMPS |
| 3-G05 | 5110 | REAR COMBINATION LAMPS |
| 3-K05 | 5120 | LICENSE LAMPS |
| 3-M05 | 5125 | INTERIOR LAMPS |
| 3-N05 | 5130 | OVERHEAD CONSOLE |
| 3-C06 | 5170 | ORNAMENTS |
| 3-D06 | 5180 | COWL & EXTRACTOR GRILLES |
| 3-G06 | 5230 | BONNET |
| 3-J06 | 5260 | TRUNK LID (CONVERTIBLE) |
| 3-L06 | 5310 | BODY PANELS (FRONT) (COUPE) |
| 3-C07 | 5310 A | BODY PANELS (FRONT) (CONVERTIBLE) |
| 3-F07 | 5320 | BODY PANELS (FENDER & WHEEL APRON) |
| 3-K07 | 5330 | BODY PANELS (DASH & COWL PANEL) |
| 3-L07 | 5340 | BODY PANELS (SIDE) (COUPE) |
| 3-E08 | 5340A | BODY PANELS (SIDE) (CONVERTIBLE) |
| 3-K08 | 5360 | BODY PANELS (ROOF) (W/O SUN ROOF) |
| 3-L08 | 5360 A | BODY PANELS (ROOF) (SUN ROOF) |
| 3-M08 | 5370 | BODY PANELS (FLOOR) (COUPE) |
| 3-D09 | 5370 A | BODY PANELS (FLOOR) (CONVERTIBLE) |
| 3-H09 | 5380 | FLOOR ATTACHMENTS (HOLE COVERS) |
| 3-J09 | 5390 | FLOOR ATTACHMENTS |
| 3-C10 | 5500 | DASHBOARD EQUIPMENTS |
| 3-F10 | 5520 | METER HOOD |
| 3-G10 | 5530 | SPEEDOMETER CABLE |
| 3-H10 | 5540 | METER COMPONENTS |
| 3-J10 | 5560 | DASHBOARD & RELATED PARTS |
| 3-E11 | 5570 | CONSOLE |
| 3-H11 | 5580 | VENTILATOR |
| 3-J11 | 5700 | FRONT SEATS (COUPE) |
| 3-E13 | 5700A | FRONT SEATS (CONVERTIBLE) |
| 3-K13 | 5750 | REAR SEATS (COUPE) |
| 3-M13 | 5790 | SEAT BELTS (COUPE) |
| 3-C14 | 5790A | SEAT BELTS (CONVERTIBLE) |
| 3-D14 | 5800 | FRONT DOORS (COUPE) |
| 3-G14 | 5800A | FRONT DOORS (CONVERTIBLE) |
| 3-K14 | 5830 | FRONT DOOR MECHANISMS (COUPE) |
| 3-F15 | 5830A | FRONT DOOR MECHANISMS (CONVERTIBLE) |
| 3-J15 | 5840 | FRONT DOOR TRIMS & RELATED PARTS (COUPE) |
| 3-H16 | 5840A | FRONT DOOR TRIMS & RELATED PARTS (CONVERTIBLE) |

| LO.NO | SEC.NO | SECTION NAME |
|---|---|---|

CATLOG-NO= AUFA02-06

DATE. 1992-05

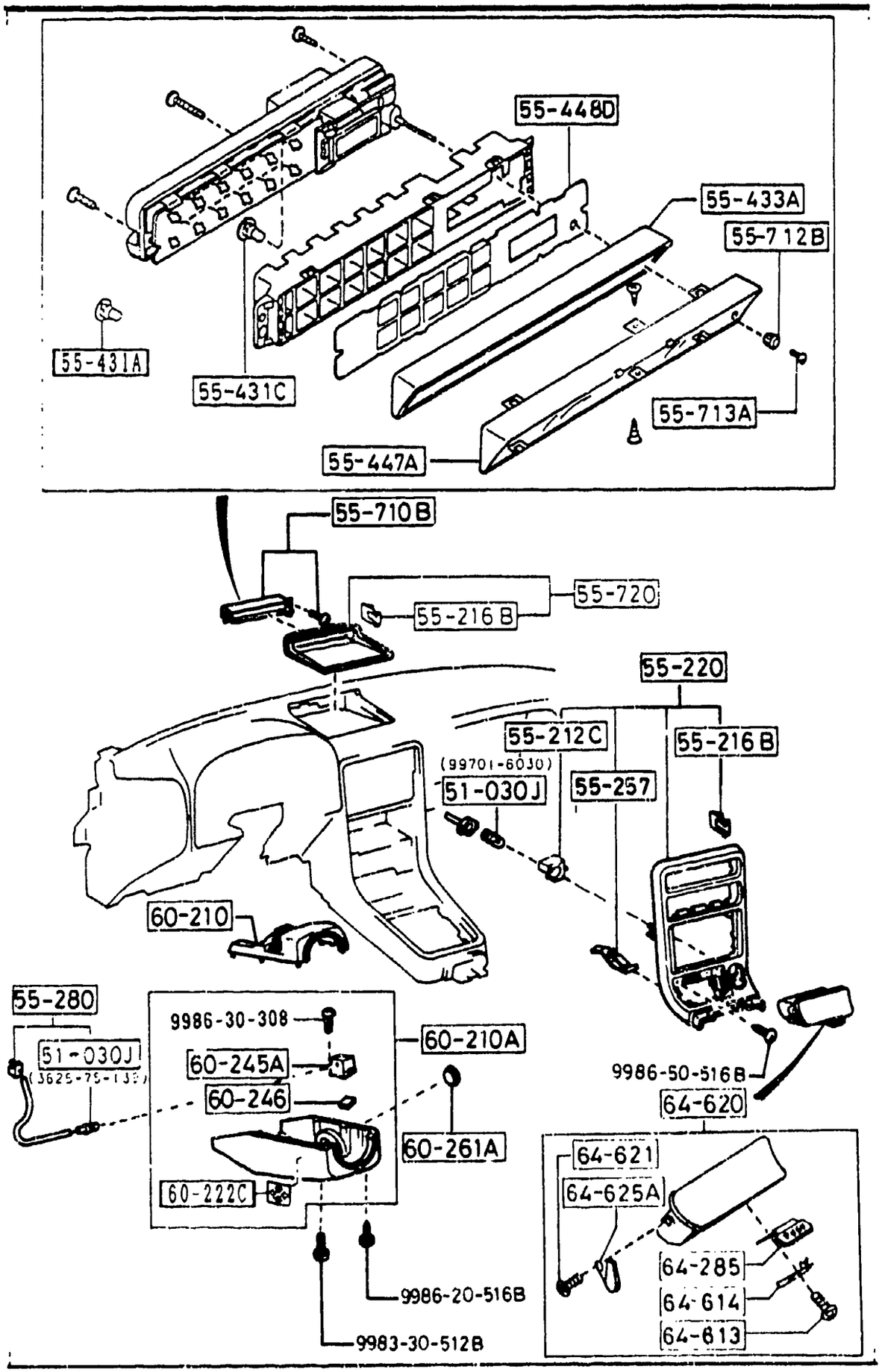


AUFA02



| PART NO. | QTY | MODEL/RESTRICTION | MODEL/RESTRICTION | MODEL/RESTRICTION | FROM-TO |
|---|---|---|---|---|---|
| 51-030J | | BULB | | | |
| 3625-75-139 | 1 | 12V 1.4W,FOR WARNING GXL, TURBO, CONV, (W/KEY ILLUMI.) | | | |
| 99701-6030 | 1 | 12V 3.4W | | | |
| 55-212C | | BOX,LAMP-(C) PANEL | | | |
| FC01-55-212 | 1 | | | | |
| 55-216B | | SPRING,CENTER PANEL | | | |
| B092-55-257 | 4 | | | | |
| 55-220 | | PANEL,CENTER | | | |
| FC01-55-210A | 1 | | | | |
| 55-257 | | PLATE,PARTITION | | | |
| FC01-55-257 | 2 | | | | |
| 55-280 | | BULB & SOCKET | | | |
| G032-55-280A | 1 | GXL, TURBO, CONV, (W/KEY ILLUMI.) | | | |
| 55-431A | | BULB,AUTO CLOCK | | | |
| FC66-55-431 | 1 | (W/AIR BAG) | | | |
| 55-431C | | BULB'B',WARNING UNIT | | | |
| FB02-55-431 | 10 | (CONVERTIBLE) | | | |
| | 11 | ((CPE))(W/O TURBO) ) | | | |
| | 12 | ((CPE))(TURBO) ) | | | |
| 55-433A | | SEPARATOR,WARNING UNIT | | | |
| FB01-55-433 | 2 | | | | |
| 55-447A | | GLASS,FRONT-WARNING UNIT | | | |
| FB02-55-447B | 1 | USA, (W/CLOCK) | | | |
| 55-448D | | LENS,WARNING UNIT | | | |
| FC02-55-448 | 1 | ((CPE))(W/O TURBO) ) | | | |
| FC06-55-448 | 1 | ((CPE))(TURBO) ) | | | |
| FC33-55-448 | 1 | ((CONVERTIBLE))(W/O | | | |

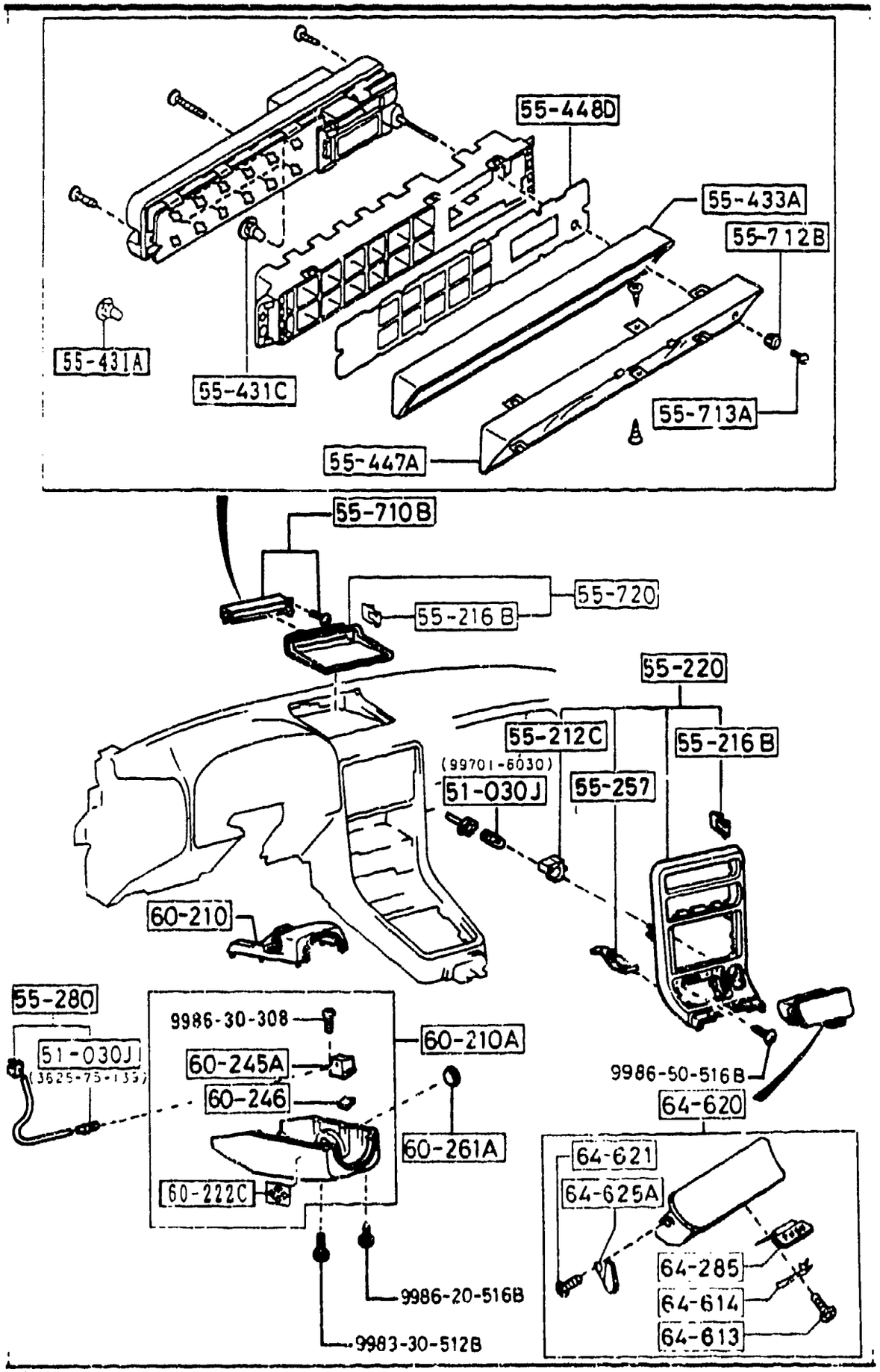


AUFA02



| PART NO. | QTY | MODEL/RESTRICTION | MODEL/RESTRICTION | MODEL/RESTRICTION | FROM-TO |
|---|---|---|---|---|---|
| CONT'D | | | | | |
| | | AIR BAG) ) | | | |
| FC66-55-448 | 1 | ((CONVERTIBLE))(W/AIR BAG) ) | | | |
| 55-710B | | UNIT,WARNING | | | |
| FC02-55-710 | 1 | ((CPE))(W/O TURBO) ) | | | |
| FC06-55-710 | 1 | ((CPE))(TURBO) ) | | | |
| FC33-55-710 | 1 | ((CONVERTIBLE))(W/O AIR BAG) ) | | | |
| FC66-55-710 | 1 | ((CONVERTIBLE))(W/AIR BAG) ) | | | |
| 55-712B | | KNOB,CLOCK | | | |
| FB01-55-713 | 1 | | | | |
| 55-713A | | SCREW,RESET KNOB | | | |
| FB01-55-714 | 1 | | | | |
| 55-720 | | BEZZEL,AUTO CLOCK | | | |
| F055-55-71XB | 1 | | | | |
| 02 | | FD8 FE1 BLACK | | | |
| 19 | | FE0 RED | | | |
| 48 | | FD9 BLUE | | | |
| 60-210 | | COVER,COLUMN-UPPER | | | |
| FC66-60-220A | 1 | (W/AIR BAG) | | | |
| FB01-60-221A | 1 | (W/O AIR BAG) | | | |
| 60-210A | | COVER,COLUMN-LOWER | | | |
| FB01-60-230A | 1 | (W/O AIR BAG) | | | |
| FC66-60-230B | 1 | (W/AIR BAG) | | | |
| 60-222C | | LABEL,INDICATOR | | | |
| BR70-60-222 | 1 | (W/AIR BAG) | | | |
| 60-245A | | CASE,LAMP | | | |
| FB01-60-232 | 1 | (W/O AIR BAG) | | | |
| FC66-60-232 | 1 | (W/AIR BAG) | | | |
| 60-246 | | LENS,COLUMN COVER | | | |

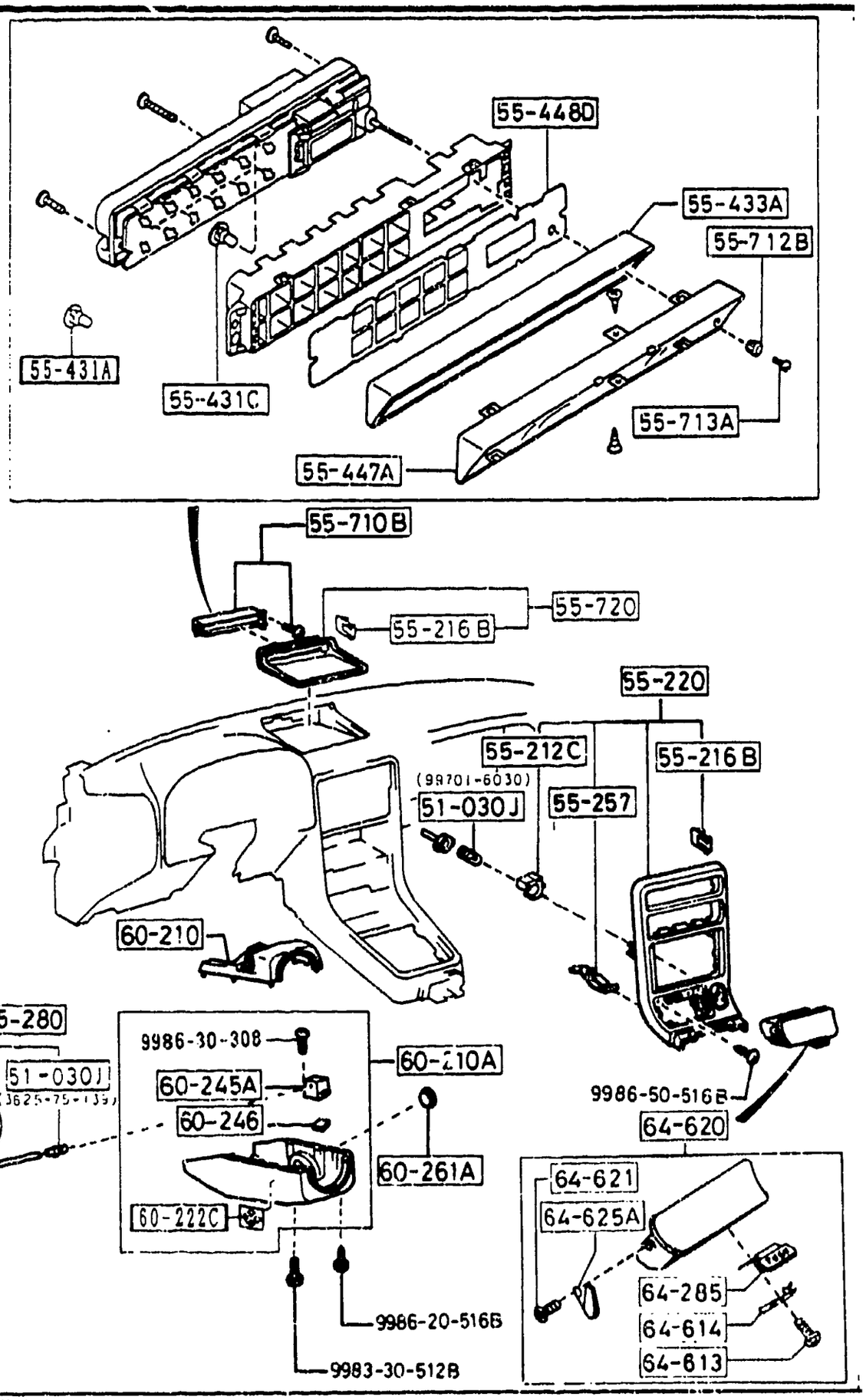


AUFA02



| PART NO. | QTY | MODEL/RESTRICTION | MODEL/RESTRICTION | MODEL/RESTRICTION | FROM-TO |
|---|---|---|---|---|---|
| CONT'D | | | | | |
| FB01-60-233 | 1 | (W/O AIR BAG) | | | |
| FC66-60-233 | 1 | (W/AIR BAG) | | | |
| 60-261A | | HOLDER,KEY CYLINDER | | | |
| FB01-60-261A | 1 | | | | |
| 64-285 | | SPRING,ASH TRAY | | | |
| FC01-64-612 | 1 | | | | |
| 64-613 | | SCREW,ASH TRAY | | | |
| FC01-64-613 | 1 | | | | |
| 64-614 | | PLATE,LOCK-ASH TRAY | | | |
| FC01-64-614 | 1 | | | | |
| 64-620 | | TRAY,ASH | | | |
| FC01-64-610 | 1 | | | | |
| 64-621 | | SCREW,ASH TRAY | | | |
| FC01-64-621 | 1 | | | | |
| 64-625A | | DAMPER | | | |
| FC01-64-625 | 1 | | | | |

## 5520 METER HOOD

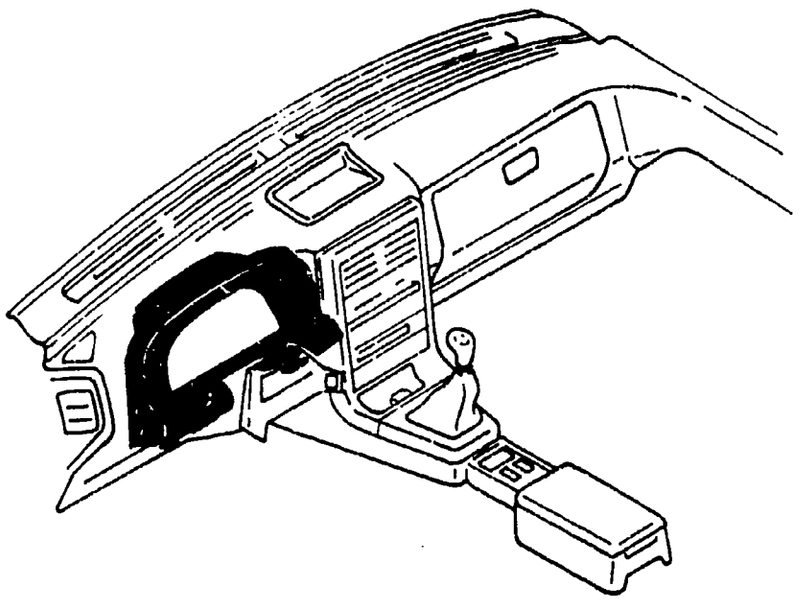

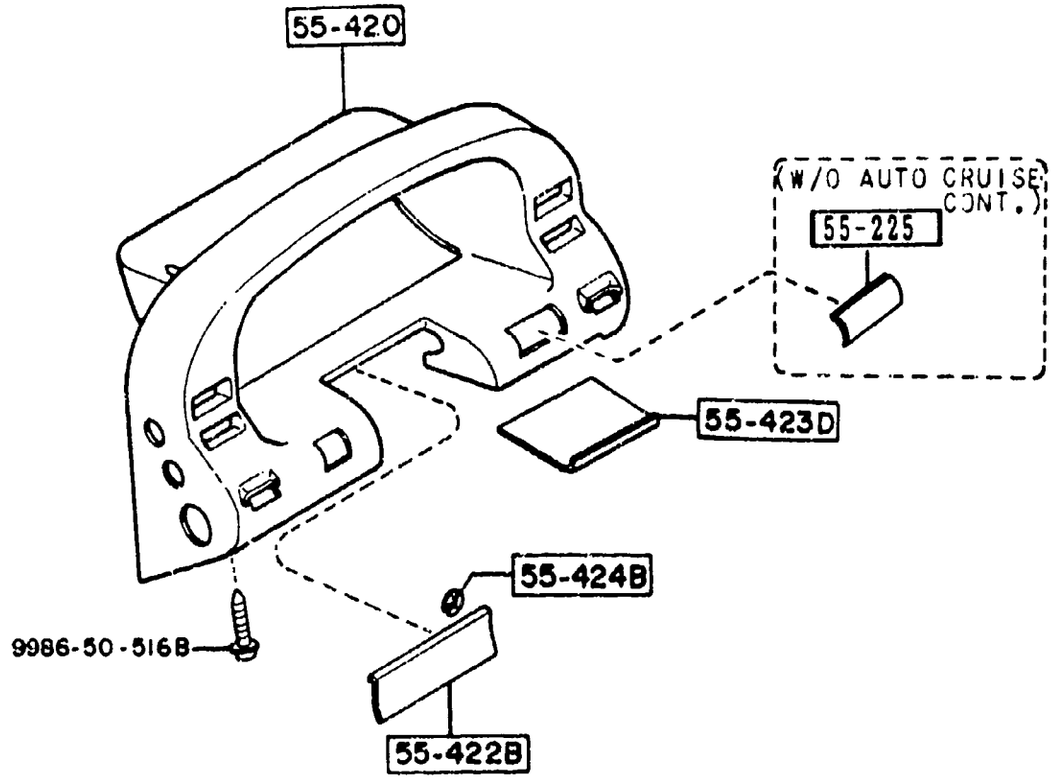


| PART NO. | QTY | MODEL/RESTRICTION | MODEL/RESTRICTION | MODEL/RESTRICTION | FROM-TO |
|---|---|---|---|---|---|
| 55-225 | | COVER,HOLE-CLUSTER SWITCH | | | |
| FC01-55-225 | 1 | GTU, GTUS, (W/O AUTO CRUISE CONT.) | | | |
| 55-420 | | HOOD,METER & CLUSTER SW. | | | |
| FC01-55-420 | 1 | (W/O AIR BAG) | | | |
| FC66-55-420 | 1 | (W/AIR BAG) | | | |
| 55-422B | | SEAL,DUST-CLUSTER SWITCH | | | |
| FB01-55-422 | 1 | (W/O AIR BAG) | | | |
| 55-423D | | COVER,SERVICE HOLE-CLUST. | | | |
| FC01-55-423 | 1 | (W/O AIR BAG) | | | |
| 55-424B | | RING,PUSH-DUST SEAL | | | |
| FB01-55-424 | 2 | (W/O AIR BAG) | | | |
| | 6 | (W/AIR BAG) | | | |

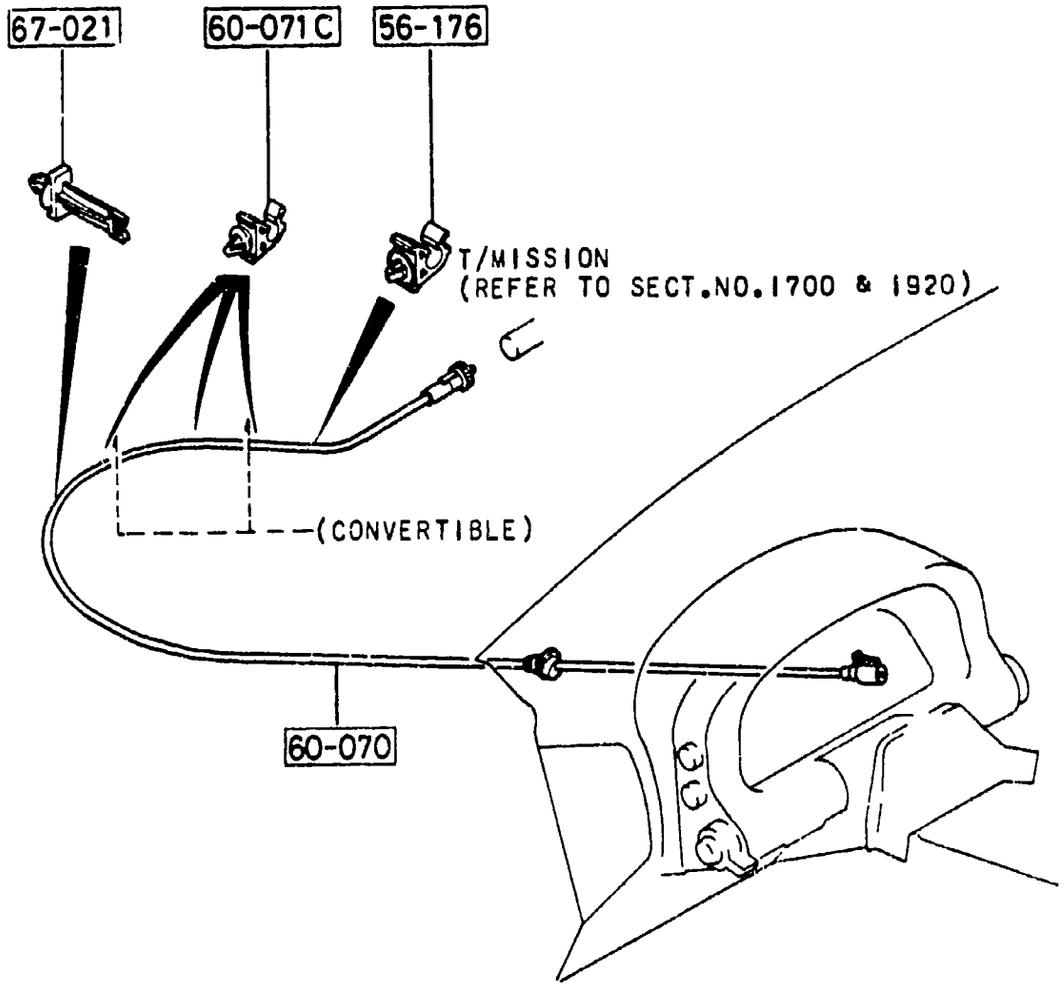




| PART NO. | QTY | MODEL/RESTRICTION | MODEL/RESTRICTION | MODEL/RESTRICTION | FROM-TO |
|---|---|---|---|---|---|
| 56-176 | | HOLDER,JACK HANDLE | | | |
| G030-56-176 | 1 | (CPE) | | | |
| 60-070 | | CABLE,SPEEDOMETER | | | |
| FB01-60-070A | 1 | ((CPE)>(MT) ) | | | |
| FB02-60-070A | 1 | ((CPE)>(AT) ) | | | |
| FB67-60-070 | 1 | ((CONVERTIBLE)>(MT) ) | | | |
| FC47-60-070 | 1 | ((CONVERTIBLE)>(AT) ) | | | |
| 60-071C | | CLIP | | | |
| UB40-60-071 | 1 | (CPE) | | | |
| | 3 | (CONVERTIBLE) | | | |
| 67-021 | | CLIP | | | |
| FB01-67-021 | 1 | | | | |

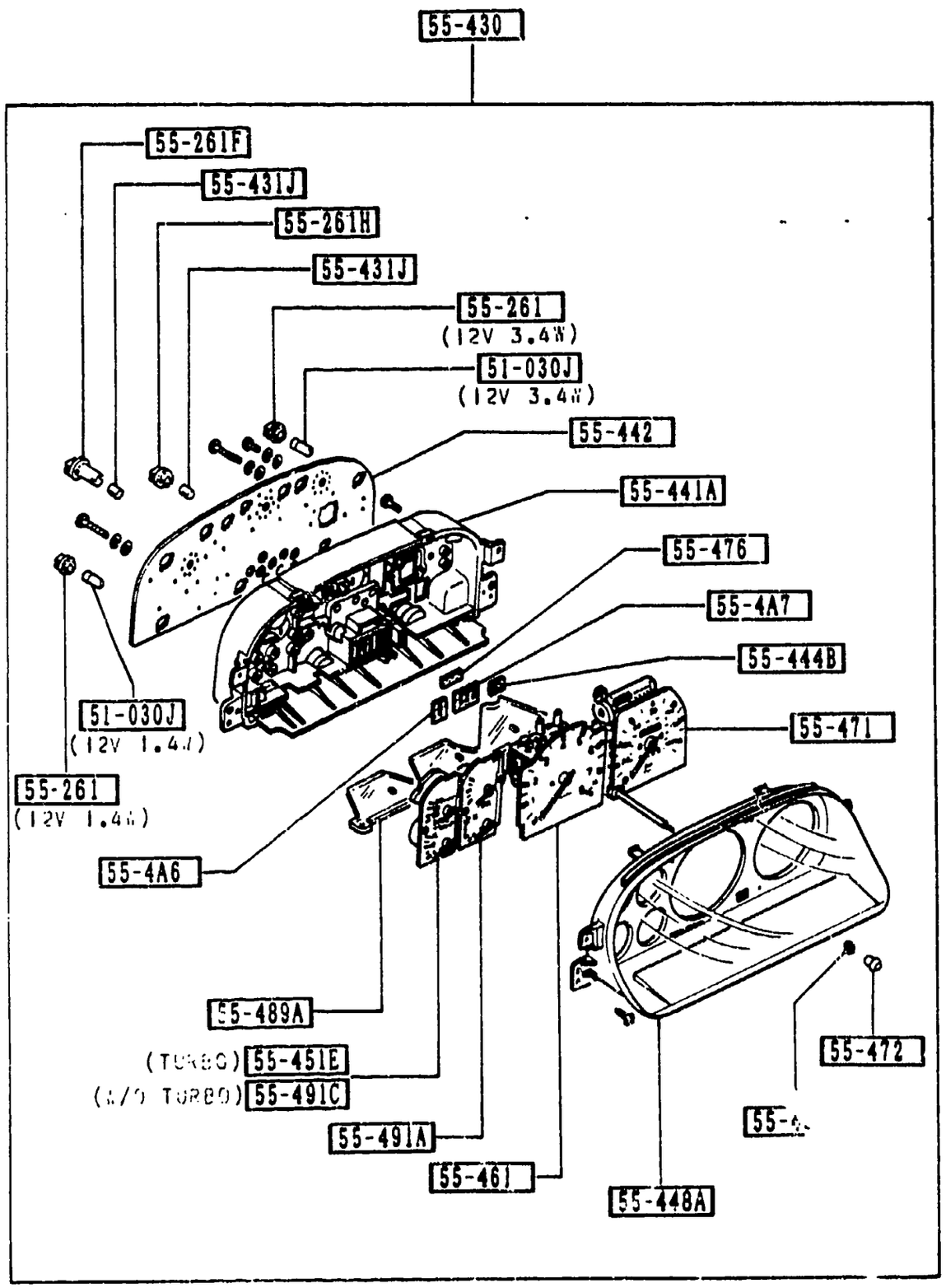


| PART NO. | QTY | MODEL/RESTRICTION | MODEL/RESTRICTION | MODEL/RESTRICTION | FROM-TO |
|---|---|---|---|---|---|
| 51-030J | | BULB | | | |
| 3625-75-139 | 1 | 12V 1.4W,FOR WARNING | | | |
| 99701-6030 | 8 | 12V 3.4W | | | |
| 55-261 | | SOCKET | | | |
| 8545-55-261 | 8 | 12V 3.4W | | | |
| 8548-55-261 | 1 | 12V 1.4W BLACK | | | |
| 55-261F | | SOCKET | | | |
| FC07-55-432 | 3 | (AT) | | | |
| 55-261H | | SOCKET,BULB | | | |
| KA01-55-466 | 4 | (AT) | | | |
| 55-4A6 | | LENS,INDICATOR-METER | | | |
| FC07-55-448 | 1 | (AT) | | | |
| 55-4A7 | | LENS,A/T INDICATOR-METER | | | |
| FC07-55-449 | 1 | (AT) | | | |
| 55-430 | | METER SET | | | |
| FC01-55-430A | 1 | ((W/O TURBO))(MT) ) | | | |
| FC07-55-430A | 1 | ((W/O TURBO))(AT) ) | | | |
| FC17-55-430A | 1 | (TURBO) | | | |
| 55-431J | | BULB'A',METER SET | | | |
| KA01-55-465 | 7 | 12V/2W (AT) | | | |
| 55-437A | | GROMMET,KNOB-METER SET | | | |
| FB01-55-437 | 1 | | | | |
| 55-441A | | CASE,METER | | | |
| FC01-55-441 | 1 | | | | |
| 55-442 | | PLATE NO.1,PRINT | | | |
| FC01-55-442 | 1 | ((W/O TURBO))(MT) ) | | | |
| FC07-55-442 | 1 | ((W/O TURBO))(AT) ) | | | |

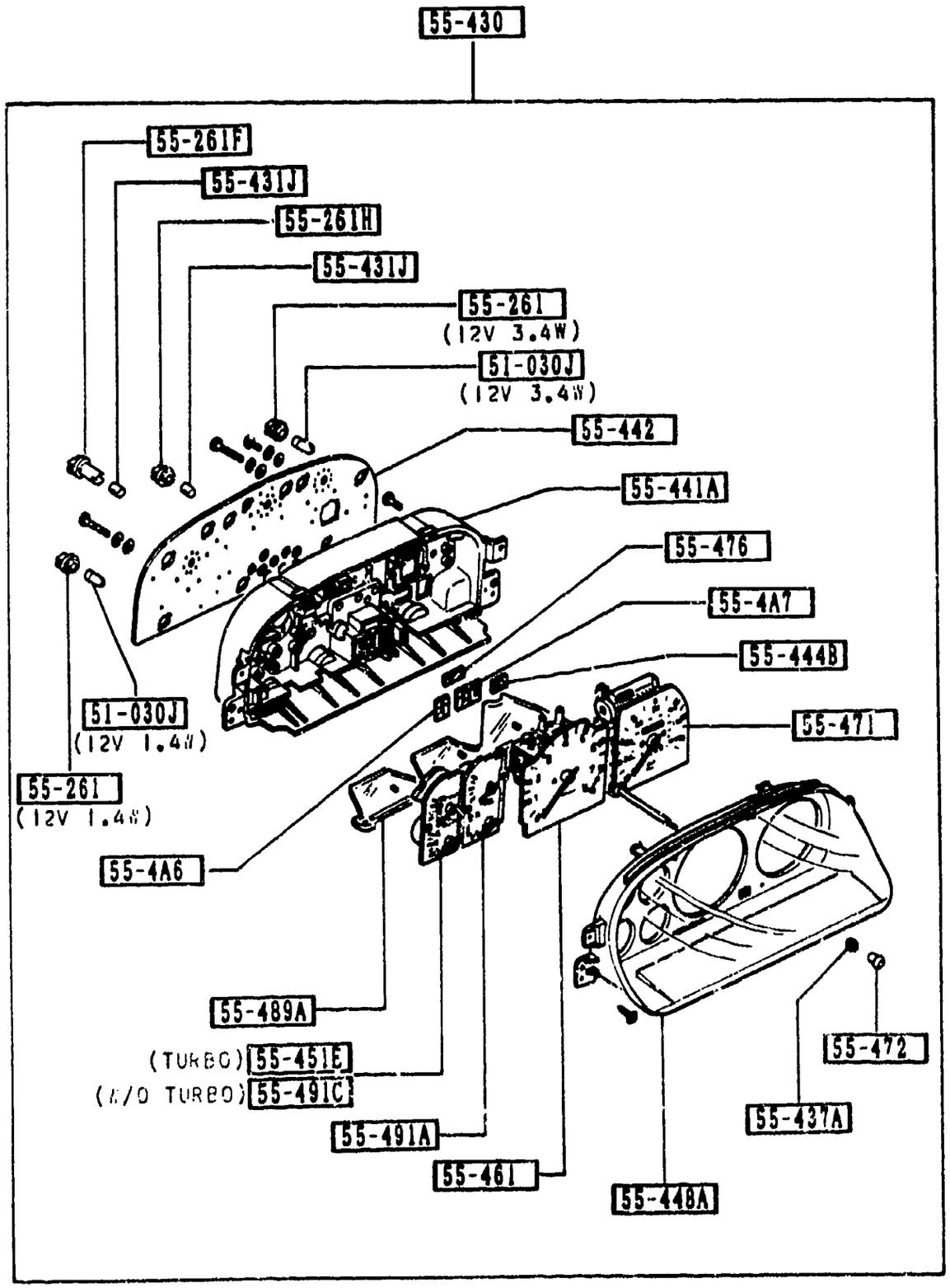




| PART NO. | QTY | MODEL/RESTRICTION | MODEL/RESTRICTION | MODEL/RESTRICTION | FROM-TO |
|---|---|---|---|---|---|
| CONT'D | | | | | |
| FC17-55-442 | 1 | (TURBO) | | | |
| 55-444B | | LENS,WARNING | | | |
| FC01-55-444 | 1 | | | | |
| 55-448A | | LENS,FRONT | | | |
| FC01-55-447 | 1 | | | | |
| 55-451E | | METER,BOOST & OIL | | | |
| FC17-55-451 | 1 | (TURBO) | | | |
| 55-461 | | TACHOMETER | | | |
| FC01-55-461 | 1 | ((W/O TURBO)>(MT) ) | | | |
| FC07-55-461 | 1 | ((W/O TURBO)>(AT) ) | | | |
| FC17-55-461 | 1 | (TURBO) | | | |
| 55-471 | | SPEEDMETER | | | |
| FC01-55-471 | 1 | (W/O TURBO) | | | |
| FC17-55-471 | 1 | (TURBO) | | | |
| 55-472 | | KNOB,TRIPMETER | | | |
| 1907-75-102A | 1 | | | | |
| 55-476 | | LENS,INDICATOR | | | |
| FC07-55-452 | 1 | (AT) | | | |
| 55-489A | | PLATE,LIGHT GUIDE-METER | | | |
| FC01-55-489 | 1 | | | | |
| 55-491A | | METER,FUEL & THERMO | | | |
| FC01-55-481 | 1 | (W/O TURBO) | | | |
| FC17-55-481 | 1 | (TURBO) | | | |
| 55-491C | | METER,OIL & VOLTAGE | | | |
| FC01-55-491 | 1 | (W/O TURBO) | | | |

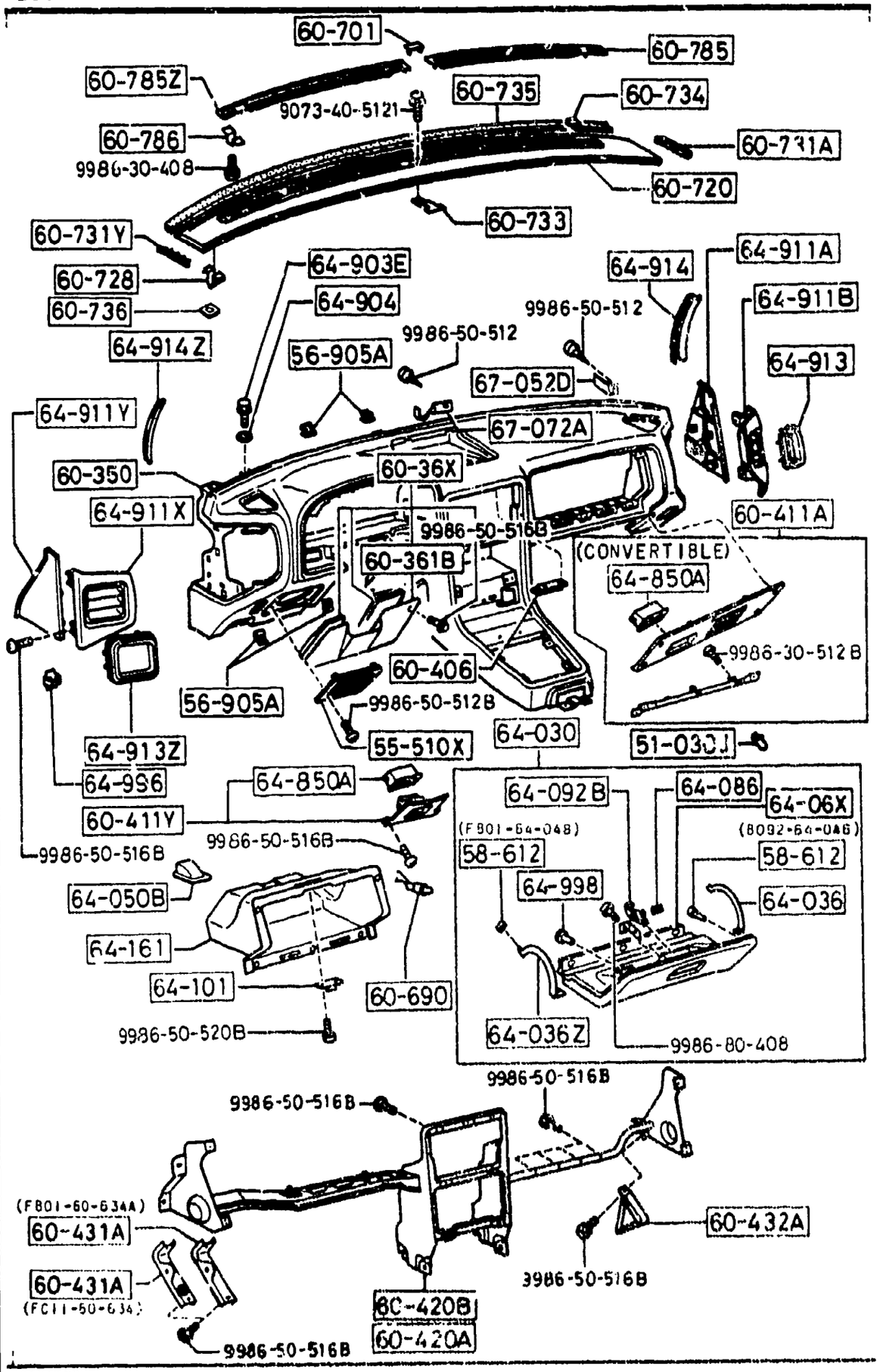


AUFA02



| PART NO. | QTY | MODEL/RESTRICTION | MODEL/RESTRICTION | MODEL/RESTRICTION | FROM-TO |
|---|---|---|---|---|---|
| 51-030J | | BULB | | | |
| 99701-6030 | 1 | 12V 3.4W | | | |
| 55-510X | | GRILLE(L),SPEAKER | | | |
| FB01-60-821 | 1 | (W/O AIR BAG) | | | |
| 02 | | FD8 FE1 BLACK | | | |
| 19 | | FE0 RED | | | |
| 48 | | FD9 BLUE | | | |
| 56-905A | | NUT,SPRING | | | |
| B092-60-408 | 24 | | | | |
| 58-612 | | CUSHION,RUBBER | | | |
| B092-64-046 | 2 | (CONVERTIBLE) | | | |
| | 4 | (CPE) | | | |
| FB01-64-048 | 2 | | | | |
| 60-350 | | PAD,CRUSH | | | |
| FB01-60-350E | 1 | (W/O AIR BAG) | | | |
| 02 | | FD8 FE1 BLACK | | | |
| 19 | | FE0 RED | | | |
| 48 | | FD9 BLUE | | | |
| FC66-60-350B | 1 | (W/AIR BAG) | | | |
| 02 | | FD8 FE1 BLACK | | | |
| 48 | | FD9 BLUE | | | |
| 60-36X | | PAD NO.1,INST PANEL | | | |
| FC66-60-36XB | 1 | (W/AIR BAG) | | | |
| 02 | | FD8 FE1 BLACK | | | |
| 48 | | FD9 BLUE | | | |
| 60-361B | | PAD NO.1,INST PANEL | | | |
| FC66-60-361B | 1 | (W/AIR BAG) | | | |
| 02 | | FD8 FE1 BLACK | | | |
| 48 | | FD9 BLUE | | | |
| 60-406 | | BRACKET,CENTER PANEL | | | |

CAT. AUFA02-06

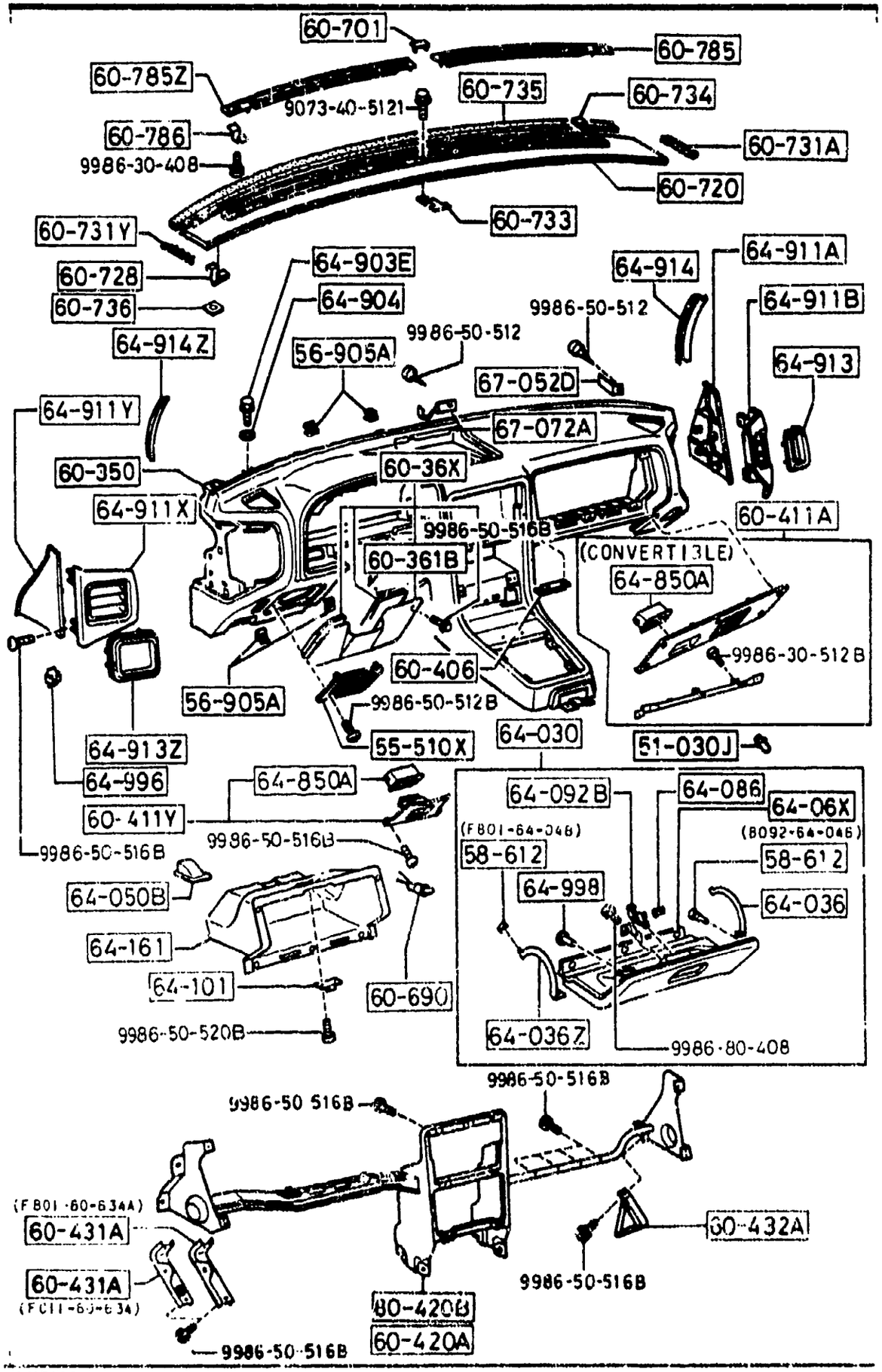


AUFA02



| PART NO. | QTY | MODEL/RESTRICTION | MODEL/RESTRICTION | MODEL/RESTRICTION | FROM-TO |
|---|---|---|---|---|---|
| CONT'D | | | | | |
| FB01-55-216A | 1 | | | | |
| 60-411A | | PANEL(R),LOWER | | | |
| FB01-64-250B | 1 | ((CONVERTIBLE))(W/O AIR BAG) ) | | | |
| 02 | | FD8 FE1 BLACK | | | |
| 48 | | FD9 BLUE | | | |
| FC01-64-250A | 1 | (CPE) ((CONVERTIBLE))(W/AIR BAG) ) | | | |
| 02 | | FD8 FE1 BLACK | | | |
| 19 | | FE0 RED | | | |
| 48 | | FD9 BLUE | | | |
| 60-411Y | | PANEL(L),LOWER | | | |
| FB01-64-270A | 1 | (CPE) ((CONVERTIBLE))(W/O AIR BAG) ) | | | |
| 02 | | FD8 FE1 BLACK | | | |
| 19 | | FE0 RED | | | |
| 48 | | FD9 BLUE | | | |
| 60-420A | | FRAME,INST.PANEL | | | |
| FB67-60-420F | 1 | ((CONVERTIBLE))(W/O AIR BAG) ) | | | |
| FC01-60-420B | 1 | (CPE) | | | |
| 60-420B | | MEMBER,CRUSH PAD | | | |
| FC66-60-420B | 1 | ((CONVERTIBLE))(W/AIR BAG) ) | | | |
| 60-431A | | BRACKET NO.1 | | | |
| FB01-60-634A | 1 | ((CONVERTIBLE))(W/O AIR BAG) ) | | | |
| FC11-60-634 | 1 | ((CONVERTIBLE))(W/O AIR BAG) ) | | | |
| 60-432A | | BRACKET NO.2 | | | |
| FB01-60-635 | 1 | (CONVERTIBLE) | | | |
| 60-690 | | SWITCH,GLOVE TRAY | | | |
| FA54-66-540 | 1 | | | | |

CAT. AUFA02-06

1992-05

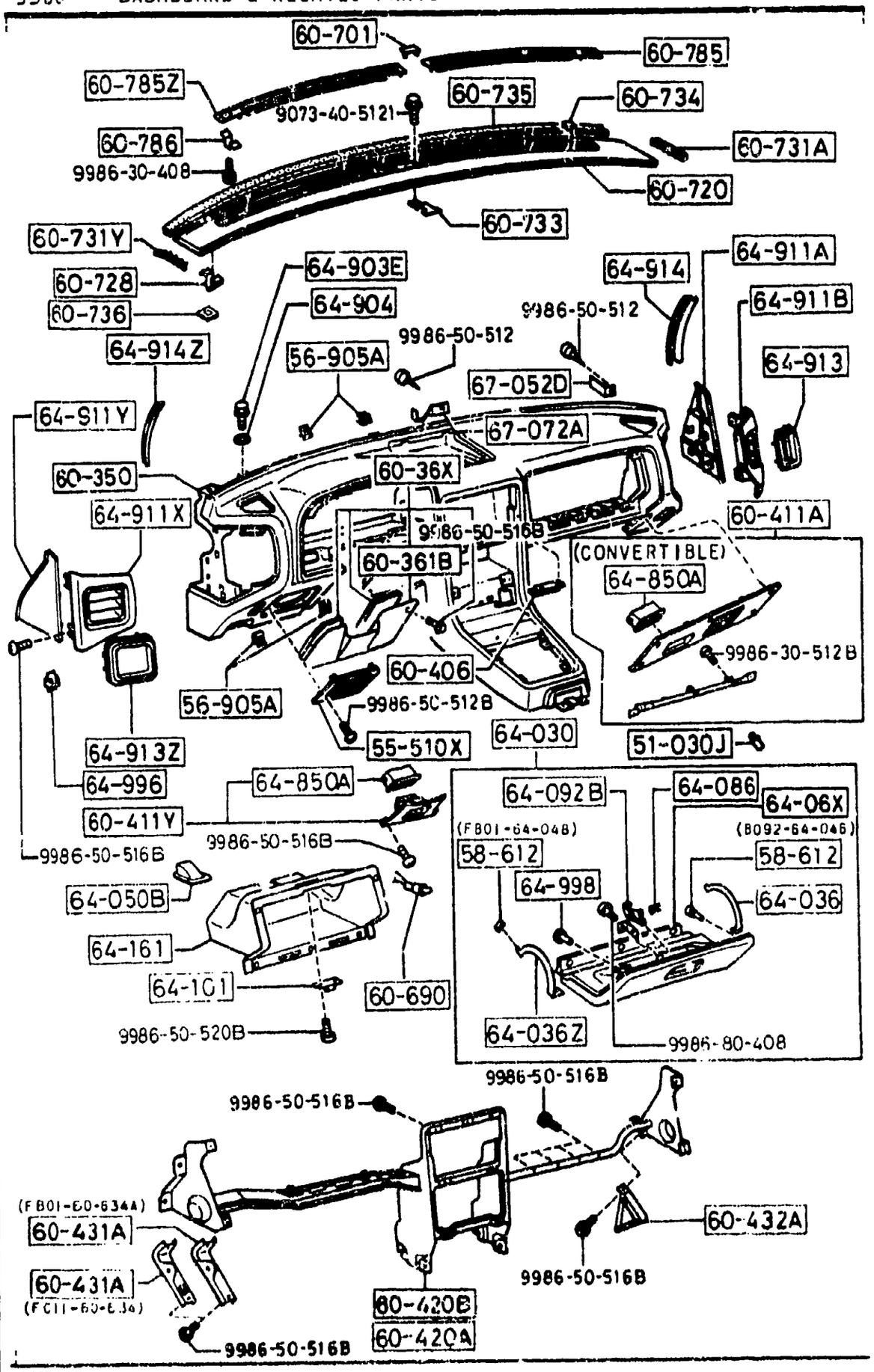


AUFA02



| PART NO. | QTY | MODEL/RESTRICTION | MODEL/RESTRICTION | MODEL/RESTRICTION | FROM-TO |
|---|---|---|---|---|---|
| 60-701 | | CAP,GARNISH | | | |
| FB01-64-905 | 1 | | | | |
| 02 | | FD8 FE1 BLACK | | | |
| 19 | | FE0 RED | | | |
| 48 | | FD9 BLUE | | | |
| 60-720 | | GARNISH,UPPER | | | |
| FB01-60-720A | 1 | | | | |
| 02 | | FD8 FE1 BLACK | | | |
| 19 | | FE0 RED | | | |
| 48 | | FD9 BLUE | | | |
| 60-728 | | CLIP,GARNISH-INST. | | | |
| FB01-60-728A | 6 | | | | |
| 60-731A | | COVER(R),GARNISH-INS T. | | | |
| FB01-60-731A | 1 | | | | |
| 02 | | FD8 FE1 BLACK | | | |
| 19 | | FE0 RED | | | |
| 48 | | FD9 BLUE | | | |
| 60-731Y | | COVER(L),GARNISH-INS T. | | | |
| FB01-60-732A | 1 | | | | |
| 02 | | FD8 FE1 BLACK | | | |
| 19 | | FE0 RED | | | |
| 48 | | FD9 BLUE | | | |
| 60-733 | | BRACKET,GARNISH-INST . | | | |
| FB01-60-733 | 1 | | | | |
| 60-734 | | PAD NO.1,GARNISH-UPP ER | | | |
| FB01-60-734A | 4 | | | | |
| 60-735 | | PAD NO.2,GARNISH-UPP ER | | | |
| FB01-60-735 | 1 | | | | |
| 60-736 | | RUBBER,CUSHION-GARNI SH | | | |
| FB01-60-736 | 6 | | | | |

CAT. AUFA02-06

1992-05

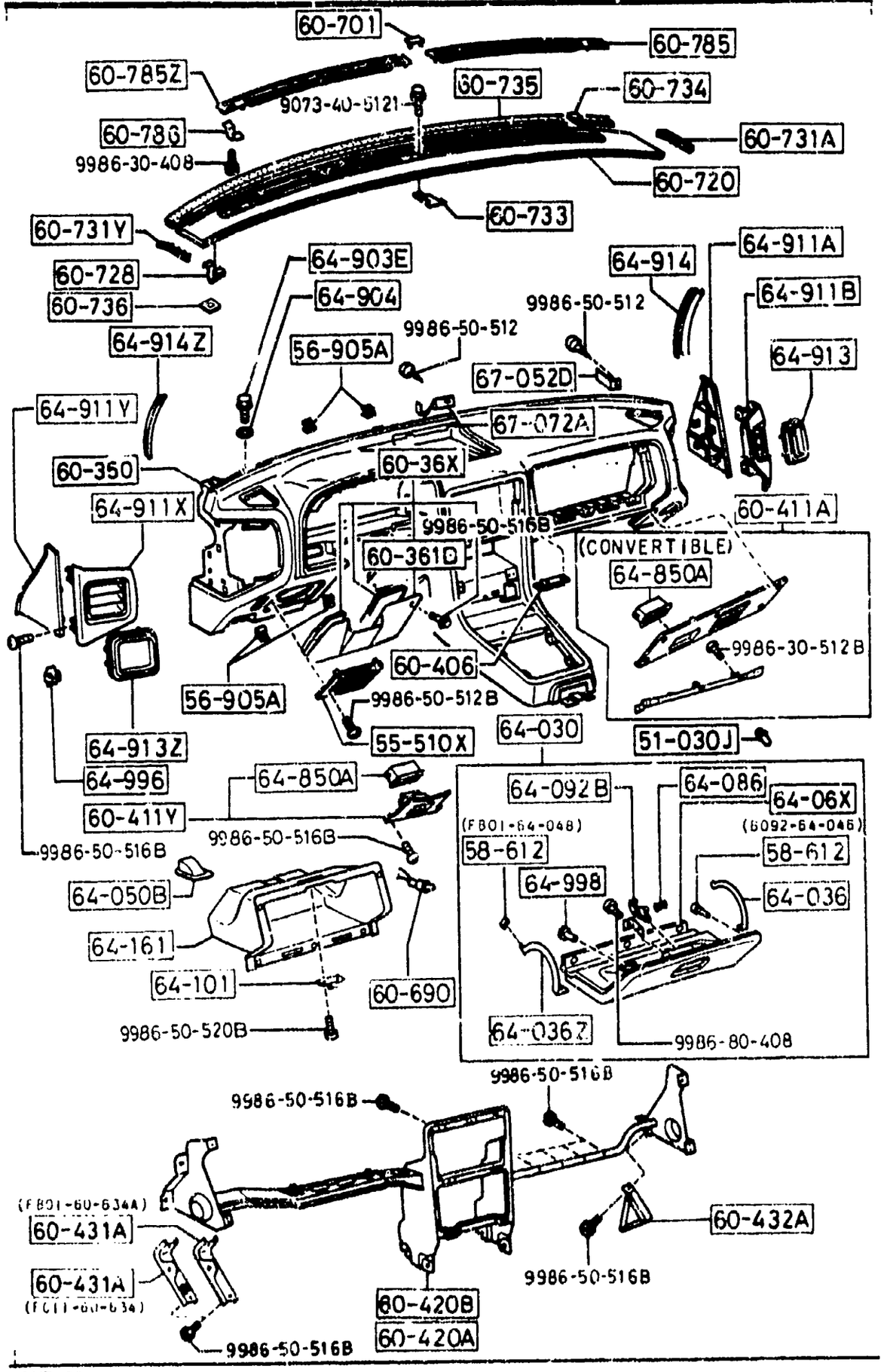


AUFA02



| PART NO. | QTY | MODEL/RESTRICTION | MODEL/RESTRICTION | MODEL/RESTRICTION | FROM-TO |
|---|---|---|---|---|---|
| 60-785 | | GRILLE(R),DEF.NOZZLE | | | |
| FB01-60-785A | 1 | | | | -0601 |
| A (FB67-60-785A) | | | | | |
| 02 | | FD8 FE1 BLACK | | | |
| 19 | | FE0 RED | | | |
| 48 | | FD9 BLUE | | | |
| FB67-60-785A | 1 | | | | 0601- |
| 02 | | FD8 FE1 BLACK | | | |
| 19 | | FE0 RED | | | |
| 43 | | FD9 BLUE | | | |
| 60-785Z | | GRILLE(L),DEF.NOZZLE | | | |
| FB01-60-795A | 1 | | | | -0601 |
| A (FB01-60-795B) | | | | | |
| 02 | | FD8 FE1 BLACK | | | |
| 19 | | FE0 RED | | | |
| 48 | | FD9 BLUE | | | |
| FB01-60-795B | 1 | | | | 0601- |
| 02 | | FD8 FE1 BLACK | | | |
| 48 | | FD9 BLUE | | | |
| 60-786 | | CLIP,DEFROSTER GRILL E | | | |
| FB01-60-786A | 4 | | | | |
| 64-030 | | BOX,GLOVE | | | |
| FC01-64-030 | 1 | (CPE) | | | |
| 02 | | FD8 FE1 BLACK | | | |
| 19 | | FE0 RED | | | |
| 48 | | FD9 BLUE | | | |
| FC33-64-030 | 1 | (CONVERTIBLE) | | | |
| 02 | | FD8 FE1 BLACK | | | |
| 48 | | FD9 BLUE | | | |
| 64-036 | | STOPPER(R),GLOVE LID | | | |
| FB01-64-043 | 1 | | | | |
| 64-036Z | | STOPPER(L),GLOVE LID | | | |
| FB01-64-044 | 1 | | | | |

0601 FC3###-806965

CAT. AUFA02-06

1992-05

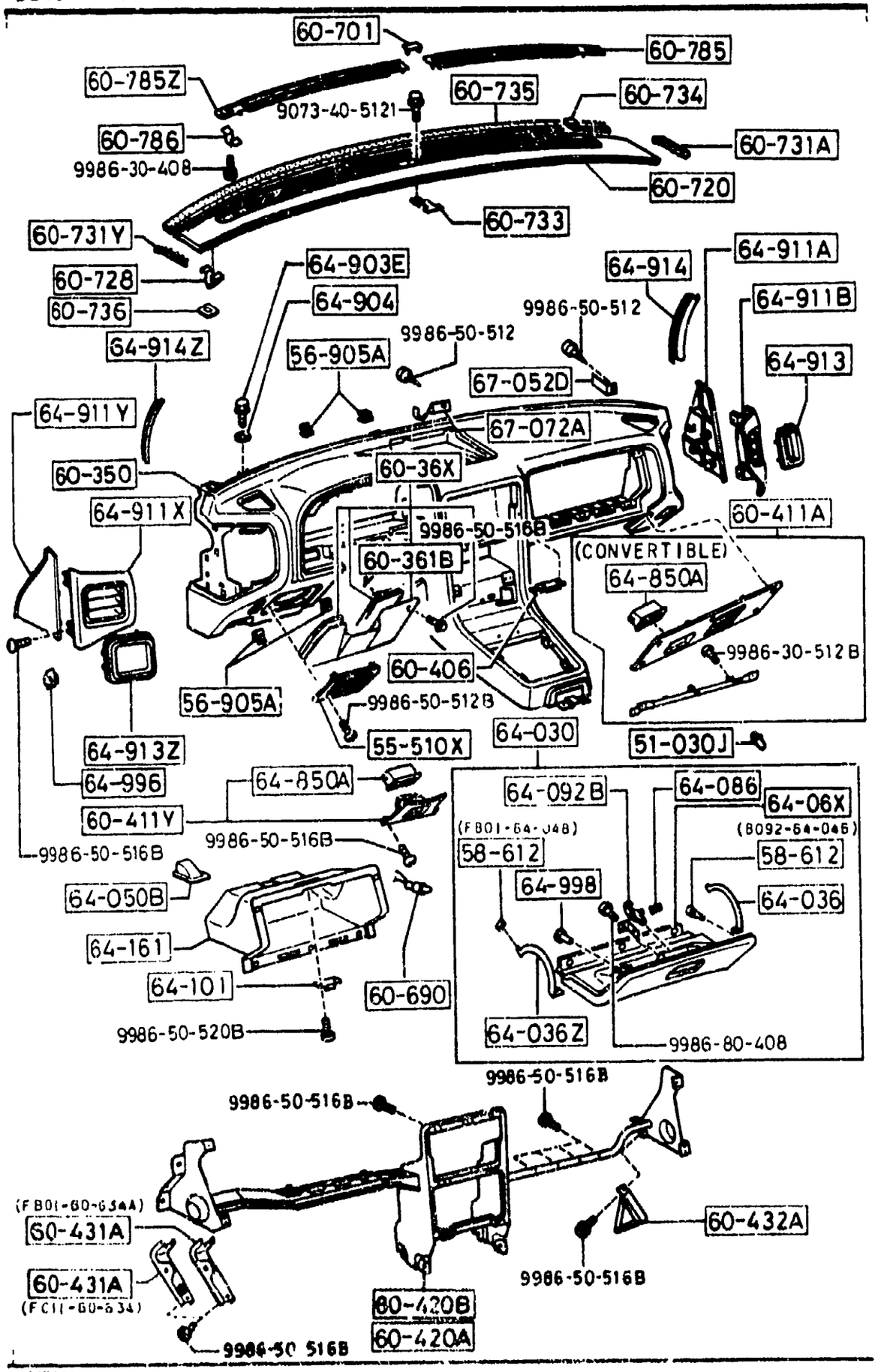


AUFA02



| PART NO. | QTY | MODEL/RESTRICTION | MODEL/RESTRICTION | MODEL/RESTRICTION | FROM-TO |
|---|---|---|---|---|---|
| 64-050B | | BOX,BULB | | | |
| H043-64-050 | 1 | | | | |
| 64-06X | | HINGE,GLOVE LID | | | |
| FC01-64-06X | 1 | (CPE) | | | |
| 64-086 | | SPRING,GLOVE LID | | | |
| FB67-64-049 | 1 | | | | |
| 64-092B | | HOOK,GLOVE LID | | | |
| HF05-64-092 | 1 | | | | |
| 64-101 | | STRIKER | | | |
| FB67-64-10X | 1 | | | | |
| 64-161 | | BOX,GLOVE | | | |
| FB01-64-161A | 1 | GTU, GTUS, (W/O FLOCKS TRIM) (CPE) | | | |
| FB02-64-161A | 1 | GXL, TURBO, (W/FLOCKS TRIM) (CPE) | | | |
| FB67-64-161A | 1 | (CONVERTIBLE) | | | |
| 64-850A | | LOUVER,LAP-LOWER PANEL | | | |
| FB01-64-850 | 1 | (CPE) | | | |
| | 2 | ((CONVERTIBLE))(W/O AIR BAG) ) | | | |
| 02 | | FD8 FE1 BLACK | | | |
| 19 | | FE0 RED | | | |
| 48 | | FD9 BLUE | | | |
| 64-903E | | BOLT | | | |
| BE32-64-903 | 2 | | | | |
| 64-904 | | WASHER,RUBBER | | | |
| BE32-64-904 | 2 | | | | |
| 64-911A | | COVER(R),SIDE | | | |
| FB01-64-912 | 1 | | | | |
| 02 | | FD8 FE1 BLACK | | | |



3 N10

# SECTION NAME INDEX (BODY) 1/2

| LO.NO | SEC.NO | SECTION NAME |
|---|---|---|
| 3-C03 | 0900 | KEY SETS |
| 3-F03 | 5000 | FRONT BUMPER |
| 3-H03 | 5010 | REAR BUMPER |
| 3-J03 | 5020 | HEAD LAMP CLEANER |
| 3-L03 | 5030 | WINDOW MOULDINGS |
| 3-M03 | 5040 | BODY MOULDINGS (COUPE) |
| 3-E04 | 5060 | SIDE PROTECTORS |
| 3-I04 | 5100 | HEAD LAMPS |
| 3-J04 | 5103 | HEAD LAMP RETRACTORS |
| 3-N04 | 5105 | FRONT COMBINATION LAMPS |
| 3-G05 | 5110 | REAR COMBINATION LAMPS |
| 3-K05 | 5120 | LICENSE LAMPS |
| 3-M05 | 5125 | INTERIOR LAMPS |
| 3-N05 | 5130 | OVERHEAD CONSOLE |
| 3-C06 | 5170 | ORNAMENTS |
| 3-D06 | 5180 | COWL & EXTRACTOR GRILLES |
| 3-G06 | 5230 | BONNET |
| 3-J06 | 5260 | TRUNK LID (CONVERTIBLE) |
| 3-L06 | 5310 | BODY PANELS (FRONT) (COUPE) |
| 3-C07 | 5310 A | BODY PANELS (FRONT) (CONVERTIBLE) |
| 3-F07 | 5320 | BODY PANELS (FENDER & WHEEL APRON) |
| 3-K07 | 5330 | BODY PANELS (DASH & COWL PANEL) |
| 3-L07 | 5340 | BODY PANELS (SIDE) (COUPE) |
| 3-E08 | 5340A | BODY PANELS (SIDE) (CONVERTIBLE) |
| 3-K08 | 5360 | BODY PANELS (ROOF) (W/O SUN ROOF) |
| 3-L08 | 5360 A | BODY PANELS (ROOF) (SUN ROOF) |
| 3-M08 | 5370 | BODY PANELS (FLOOR) (COUPE) |
| 3-D09 | 5370 A | BODY PANELS (FLOOR) (CONVERTIBLE) |
| 3-H09 | 5380 | FLOOR ATTACHMENTS (HOLE COVERS) |
| 3-J09 | 5390 | FLOOR ATTACHMENTS |
| 3-C10 | 5500 | DASHBOARD EQUIPMENTS |
| 3-F10 | 5520 | METER HOOD |
| 3-G10 | 5530 | SPEEDOMETER CABLE |
| 3-H10 | 5540 | METER COMPONENTS |
| 3-J10 | 5560 | DASHBOARD & RELATED PARTS |
| 3-E11 | 5570 | CONSOLE |
| 3-H11 | 5580 | VENTILATOR |
| 3-J11 | 5700 | FRONT SEATS (COUPE) |
| 3-E13 | 5700A | FRONT SEATS (CONVERTIBLE) |
| 3-K13 | 5750 | REAR SEATS (COUPE) |
| 3-M13 | 5790 | SEAT BELTS (COUPE) |
| 3-C14 | 5790A | SEAT BELTS (CONVERTIBLE) |
| 3-D14 | 5800 | FRONT DOORS (COUPE) |
| 3-G14 | 5800A | FRONT DOORS (CONVERTIBLE) |
| 3-K14 | 5830 | FRONT DOOR MECHANISMS (COUPE) |
| 3-F15 | 5830A | FRONT DOOR MECHANISMS (CONVERTIBLE) |
| 3-J15 | 5840 | FRONT DOOR TRIMS & RELATED PARTS (COUPE) |
| 3-H16 | 584CA | FRONT DOOR TRIMS & RELATED PARTS (CONVERTIBLE) |

| LO.NO | SEC.NO | SECTION NAME |
|---|---|---|

CATLOG-NO= AUFA02-06

DATE. 1992-05

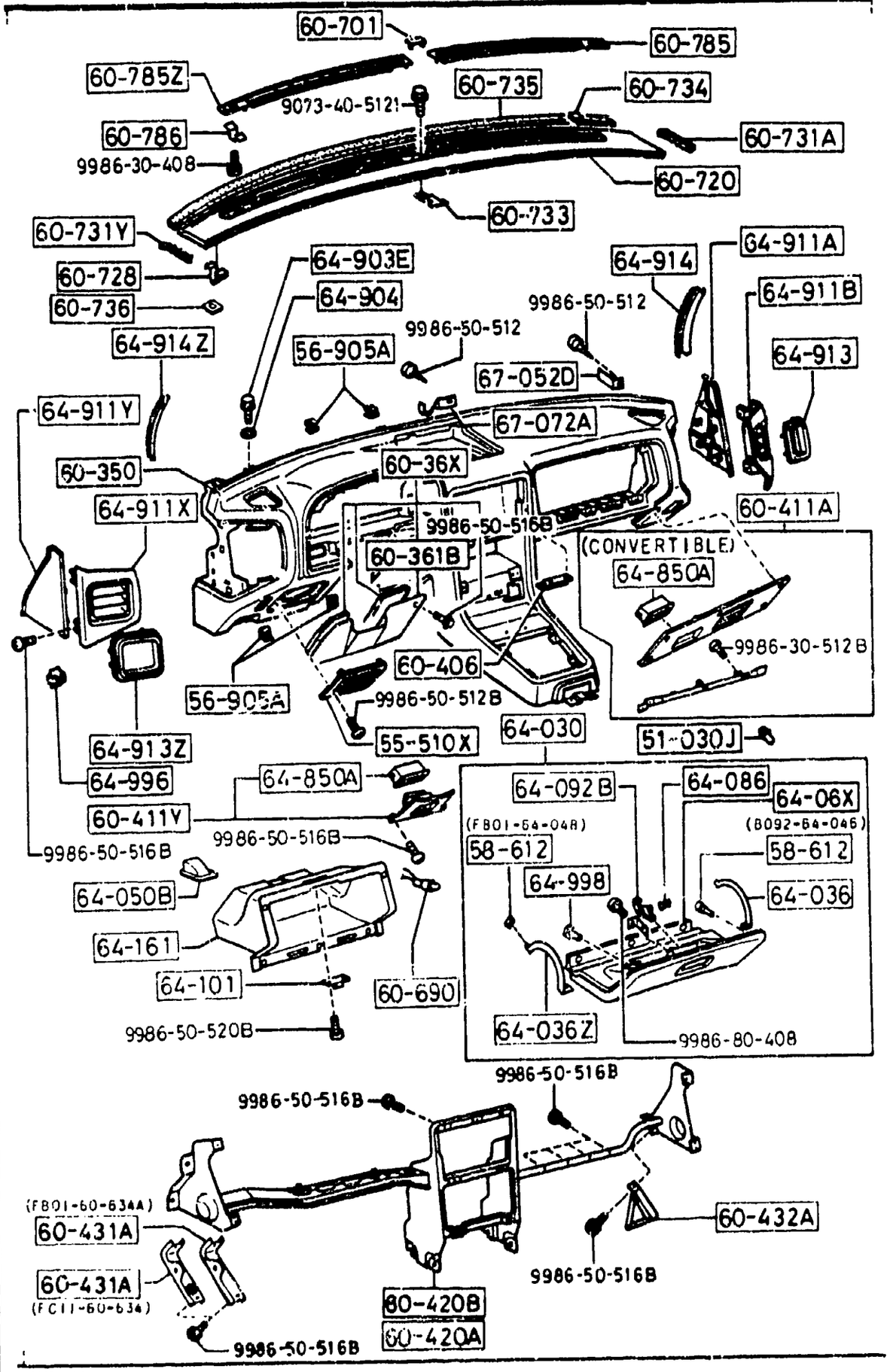


AUFA02



| PART NO. | QTY | MODEL/RESTRICTION | MODEL/RESTRICTION | MODEL/RESTRICTION | FROM-TO |
|---|---|---|---|---|---|
| CONT'D | | | | | |
| 19 | | FE0 RED | | | |
| 48 | | FD9 BLUE | | | |
| +----------+ | | | | | |
| \| 64-911B \| | | PANEL(R),SIDE-CRUSH PAD | | | |
| +----------+ | | | | | |
| FB01-64-911A | 1 | | | | |
| 02 | | FD8 FE1 BLACK | | | |
| 19 | | FE0 RED | | | |
| 48 | | FD9 BLUE | | | |
| +----------+ | | | | | |
| \| 64-911X \| | | PANEL(L),SIDE-CRUSH PAD | | | |
| +----------+ | | | | | |
| FB01-64-921A | 1 | | | | |
| 02 | | FD8 FE1 BLACK | | | |
| 19 | | FE0 RED | | | |
| 48 | | FD9 BLUE | | | |
| +----------+ | | | | | |
| \| 64-911Y \| | | COVER(L),SIDE | | | |
| +----------+ | | | | | |
| FB01-64-922 | 1 | | | | |
| 02 | | FD8 FE1 BLACK | | | |
| 19 | | FE0 RED | | | |
| 48 | | FD9 BLUE | | | |
| +----------+ | | | | | |
| \| 64-913 \| | | RUBBER(R),SEAL-SIDE PANEL | | | |
| +----------+ | | | | | |
| FB01-64-913 | 1 | | | | |
| +----------+ | | | | | |
| \| 64-9132 \| | | RUBBER(L),SEAL-SIDE PANEL | | | |
| +----------+ | | | | | |
| FB01-64-923 | 1 | | | | |
| +----------+ | | | | | |
| \| 64-914 \| | | COVER(R),SIDE NO.2 | | | |
| +----------+ | | | | | |
| FB01-64-914 | 1 | | | | |
| 02 | | FD8 FE1 BLACK | | | |
| 19 | | FE0 RED | | | |
| 48 | | FD9 BLUE | | | |
| +----------+ | | | | | |
| \| 64-914Z \| | | COVER(L),SIDE NO.2 | | | |
| +----------+ | | | | | |
| FB01-64-924 | 1 | | | | |
| 02 | | FD8 FE1 BLACK | | | |
| 19 | | FE0 RED | | | |
| 48 | | FD9 BLUE | | | |

CAT. AUFA02-06

1992-05

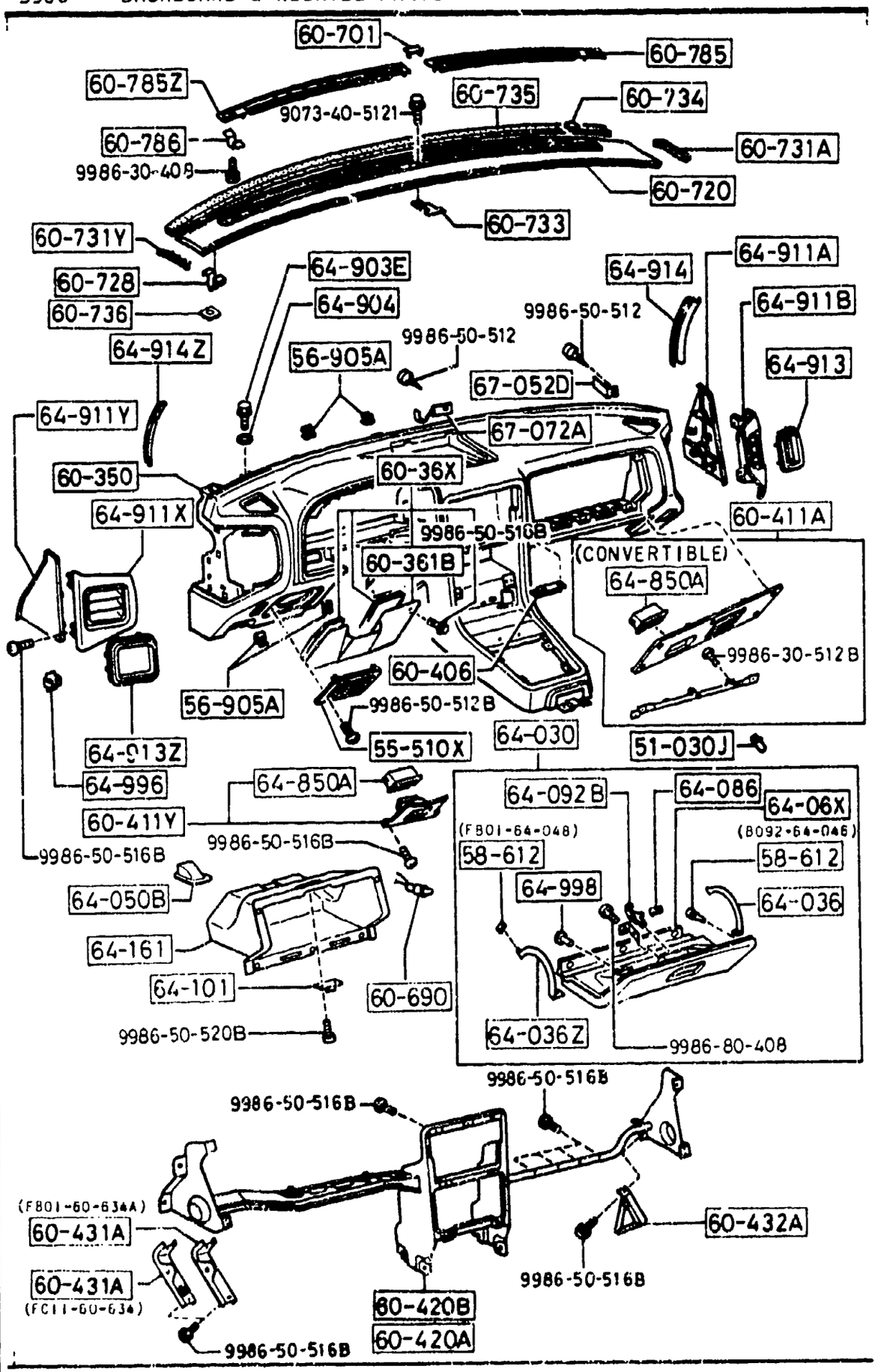


AUFA02



| PART NO. | QTY | MODEL/RESTRICTION | MODEL/RESTRICTION | MODEL/RESTRICTION | FROM-TO |
|---|---|---|---|---|---|
| 64-996 | | NUT,EXPANSION | | | |
| H043-64-996A | 11 | (CPE) | | | |
| | 13 | (CONVERTIBLE) | | | |
| 64-998 | | SCREW,GLOVE LID | | | |
| H199-64-998 | 10 | | | | |
| 67-052D | | CLIP | | | |
| 8545-67-052 | 1 | | | | |
| 67-072A | | CLIP | | | |
| GC77-67-072 | 2 | | | | |

CAT. AUFA02-06

1992-05

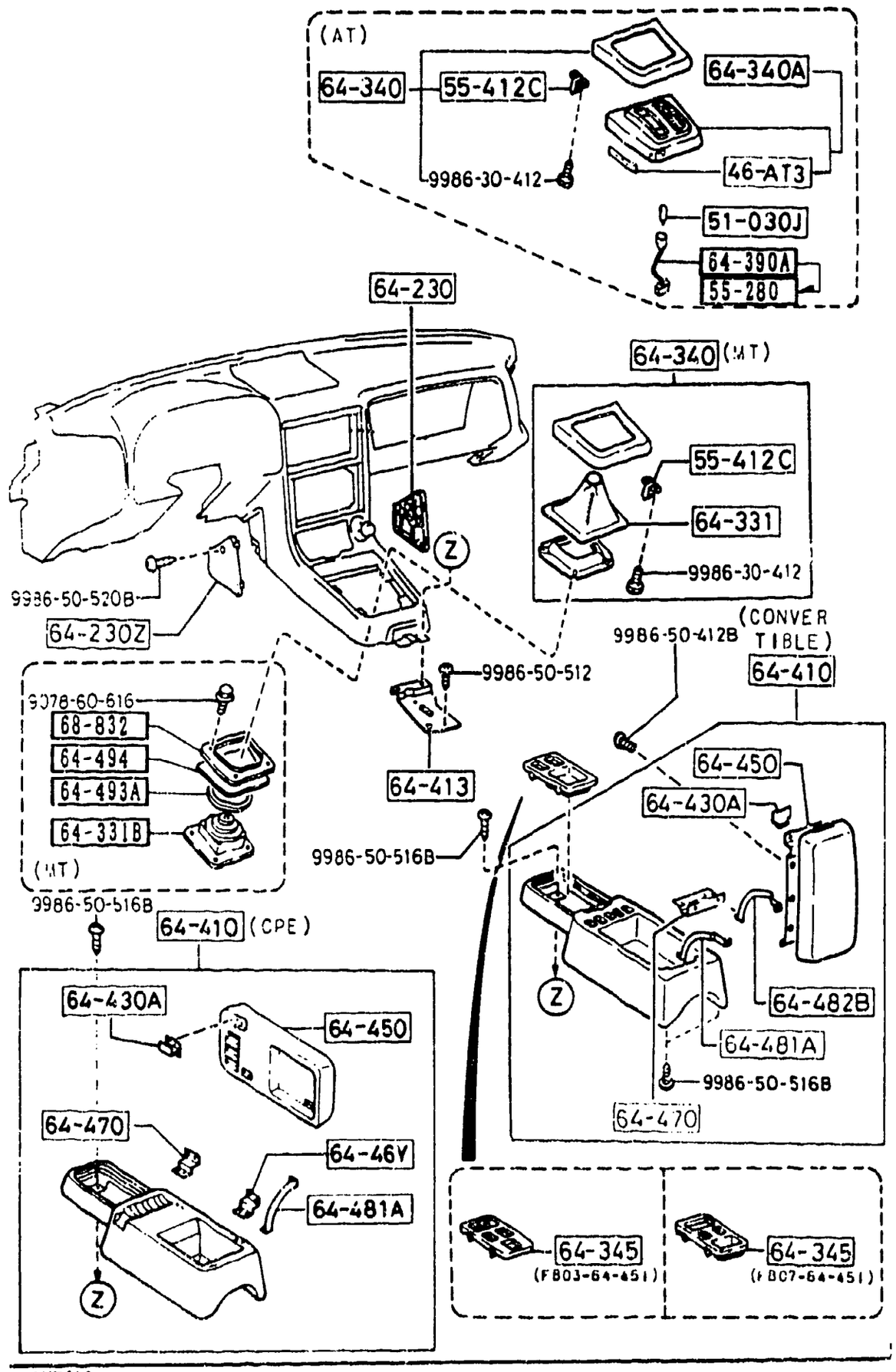


AUFA02

| PART NO. | QTY | MODEL/RESTRICTION | MODEL/RESTRICTION | MODEL/RESTRICTION | FROM-TO |
|---|---|---|---|---|---|
| 46-AT3 | | LABEL,CHANGE | | | |
| FC08-46-AT3B | 1 | ENGLISH (AT) | | | -9823 |
| 51-030J | | BULB | | | |
| 99701-6030 | 1 | 12V 3.4W (AT) | | | |
| 55-280 | | BULB & SOCKET | | | |
| FC07-55-280 | 1 | (AT) | | | 9207- |
| 55-412C | | SPRING | | | |
| 8531-55-412 | 4 | | | | |
| 64-230 | | WALL(R),SIDE | | | |
| FB01-64-221A | 1 | | | | |
| 02 | | FD8 FE1 BLACK | | | |
| 19 | | FE0 RED | | | |
| 48 | | FD9 BLUE | | | |
| 64-230Z | | WALL(L),SIDE | | | |
| FB01-64-231A | 1 | | | | |
| 02 | | FD8 FE1 BLACK | | | |
| 19 | | FE0 RED | | | |
| 48 | | FD9 BLUE | | | |
| 64-331 | | BOOT,CHANGE | | | |
| FC01-64-331 | 1 | (MT) | | | |
| 64-331B | | BOOT,CHANGE | | | |
| FB01-64-490B | 1 | (MT) | | | |
| 64-340 | | PLATE,UPPER | | | |
| FC01-64-340B | 1 | (MT) | | | |
| FC07-64-390A | 1 | (AT) | | | |
| 64-340A | | INDICATOR | | | |
| FC07-64-350CA (FC07-64-350D) | 1 | | | | -9207 |
| FC07-64-350DA (FC07-64-350E) | 1 | | | | 9207-9823 |

9207 FC3HHH-702557
9823 FC3HHH-801679

CAT. AUFA02-06

1992-05

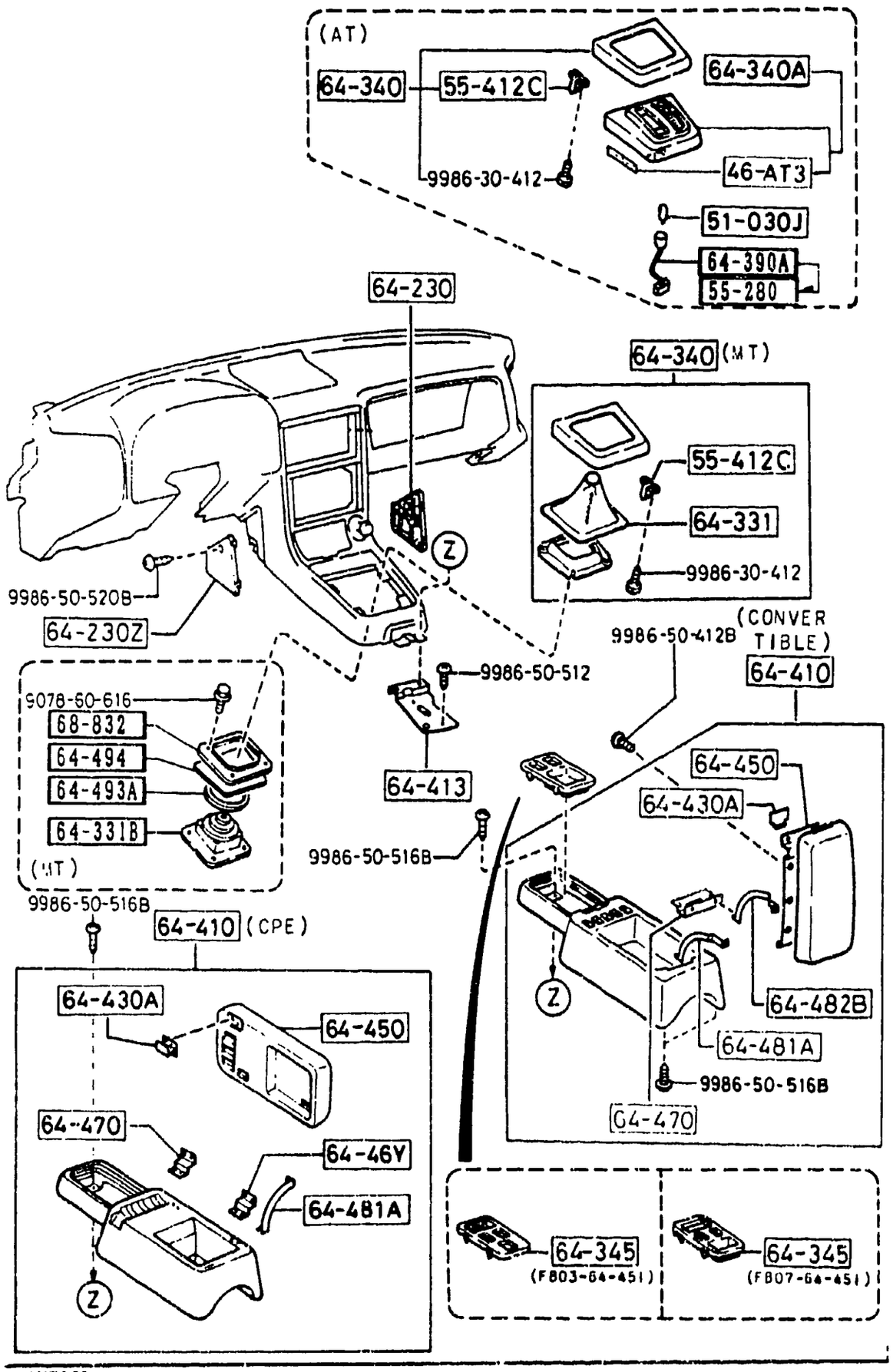


| PART NO. | QTY | MODEL/RESTRICTION | MODEL/RESTRICTION | MODEL/RESTRICTION | FROM-TO |
|---|---|---|---|---|---|
| CONT'D | | | | | |
| FC07-64-350E | 1 | (AT) | | | 9823- |
| 64-345 | | PANEL,SWITCH | | | |
| FB03-64-451 | 1 | GTU, GTUS, TURBO, (W/DR MIR.SW.W/O A.A .SUSP.SW.) (CPE) | | | |
| FB07-64-451 | 1 | GXL, CONV, (W/DR MIR.SW.W/A.A.S USP.SW.) | | | |
| 64-390A | | CORD,INDICATOR | | | |
| UC81-64-390 | 1 | (AT) | | | -9207 |
| 64-410 | | CONSOLE,REAR | | | |
| FB02-64-410C | 1 | (CONVERTIBLE) | | | |
| 02 | | FD8 FE1 BLACK | | | |
| 48 | | FD9 BLUE | | | |
| FC01-64-410B | 1 | GTU, GTUS, (W/O FLOCKS TRIM) (CPE) | | | |
| 02 | | FD8 FE1 BLACK | | | |
| 19 | | FE0 RED | | | |
| 48 | | FD9 BLUE | | | |
| FC02-64-410B | 1 | GXL, TURBO, (W/FLOCKS TRIM) (CPE) | | | |
| 02 | | FD8 FE1 BLACK | | | |
| 19 | | FE0 RED | | | |
| 48 | | FD9 BLUE | | | |
| 64-413 | | BRACKET,CONSOLE-NO.1 | | | |
| FB01-64-44X | 1 | GTU, GTUS, TURBO, (W.DR MIR.SW.W/O A.A .SUSP.SW.) | | | |
| 64-430A | | LOCK,CONSOLE-REAR | | | |
| FC01-64-43Y | 1 | GTU, GTUS, TURBO, (W/DR MIR.SW.W/O A.A .SUSP.SW.) (CPE) | | | |
| FB01-64-430 | 1 | (CONVERTIBLE) | | | |
| 64-450 | | LID,CONSOLE | | | |

9207 FC3###-702557
9823 FC3###-801679

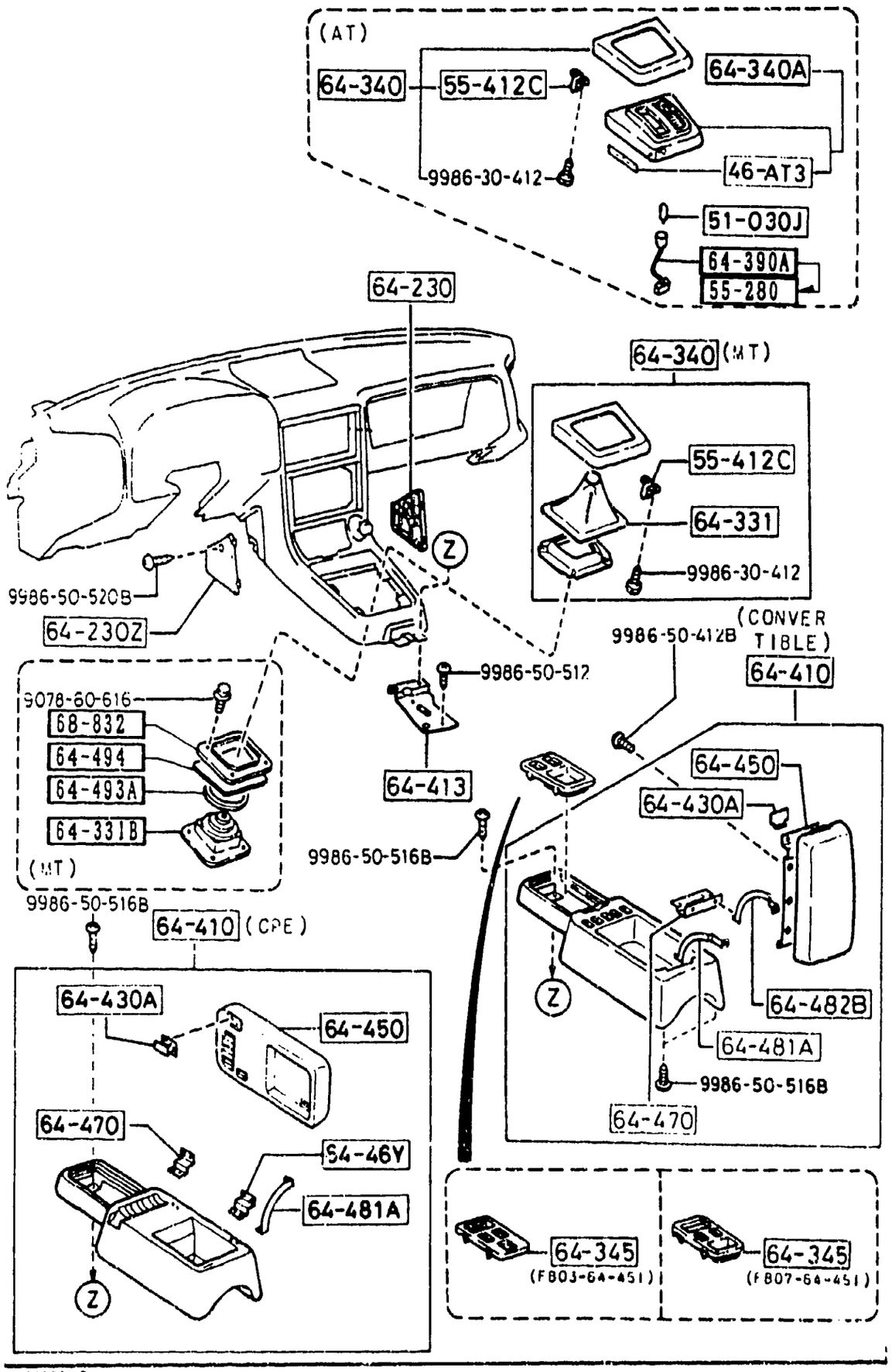


| PART NO. | QTY | MODEL/RESTRICTION | MODEL/RESTRICTION | MODEL/RESTRICTION | FROM-TO |
|---|---|---|---|---|---|
| CONT'D | | | | | |
| FB01-64-440B | 1 | (CONVERTIBLE) | | | |
| 02 | | FD8 FE1 BLACK | | | |
| 48 | | FD9 BLUE | | | |
| FC01-64-450A | 1 | (CPE) | | | |
| 02 | | FD8 FE1 BLACK | | | |
| 19 | | FE0 RED | | | |
| 48 | | FD9 BLUE | | | |
| 64-46Y | | HINGE,CONSOLE LID-RR | | | |
| FC01-64-46X | 1 | (CPE) | | | |
| 64-470 | | HINGE | | | |
| FB01-64-45X | 1 | (CONVERTIBLE) | | | |
| 02 | | FD8 FE1 BLACK | | | |
| 48 | | FD9 BLUE | | | |
| FC01-64-45X | 1 | (CPE) | | | |
| 64-481A | | STOPPER,CONSOLE LID | | | |
| FB01-64-452 | 1 | (CONVERTIBLE) | | | |
| FC01-64-452 | 1 | (CPE) | | | |
| 64-482B | | STOPPER,CONSOLE LID | | | |
| FB01-64-453 | 1 | (CONVERTIBLE) | | | |
| 64-493A | | PACK,SILENT | | | |
| H001-64-493 | 1 | (MT) | | | |
| 64-494 | | PAD,CHANGE BOOT | | | |
| FB01-64-495 | 1 | (MT) | | | |
| 68-832 | | SHEET,BOOT | | | |
| FB01-64-491 | 1 | (MT) | | | |

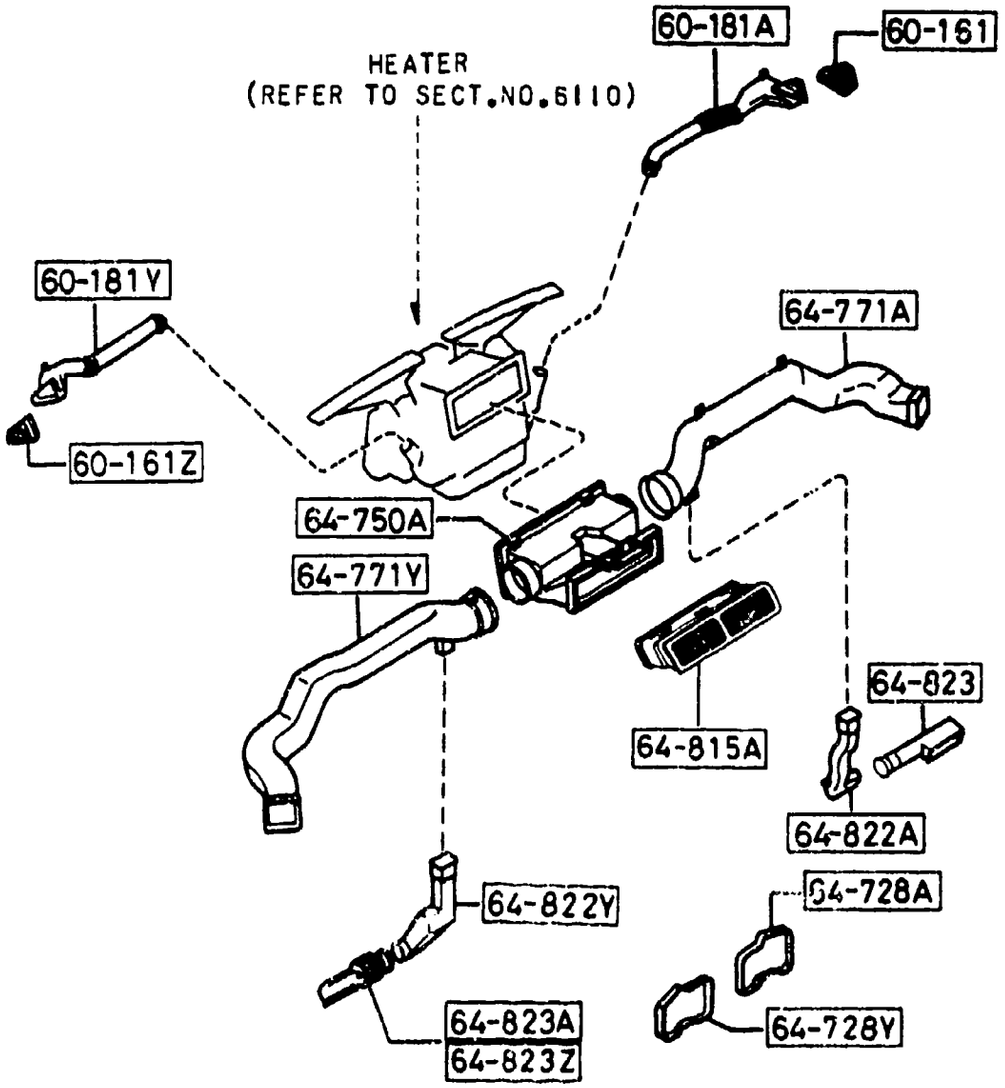




| PART NO. | QTY | MODEL/RESTRICTION | MODEL/RESTRICTION | MODEL/RESTRICTION | FROM-TO |
|---|---|---|---|---|---|
| 60-161 | | GRILLE(R),DEMISTER | | | |
| FB01-60-161A | 1 | | | | |
| 02 | | FD8 FE1 BLACK | | | |
| 19 | | FE0 RED | | | |
| 48 | | FD9 BLUE | | | |
| 60-161Z | | GRILLE(L),DEMISTER | | | |
| FB01-60-171A | 1 | | | | |
| 02 | | FD8 FE1 BLACK | | | |
| 19 | | FE0 RED | | | |
| 48 | | FD9 BLUE | | | |
| 60-181A | | DUCT(R),SIDE DEMIST. | | | |
| FB01-60-181 | 1 | | | | |
| 60-181Y | | DUCT(L),SIDE DEMIST. | | | |
| FB01-60-191 | 1 | | | | |
| 64-728A | | GASKET(R) | | | |
| FB01-64-728 | 1 | (CPE) | | | |
| 64-728Y | | GASKET(L) | | | |
| FB01-64-828 | 1 | (CPE) | | | |
| 64-750A | | DUCT,CENTER | | | |
| FB01-61-161 | 1 | | | | |
| 64-771A | | DUCT NO.1(R) | | | |
| FB01-64-760 | 1 | ((CONVERTIBLE))(W/O AIR BAG) ) | | | |
| FC01-64-760 | 1 | (CPE) ((CONVERTIBLE))(W/AIR BAG) ) | | | |
| 64-771Y | | DUCT NO.1(L) | | | |
| FB01-64-770 | 1 | (CPE) ((CONVERTIBLE))(W/O AIR BAG) ) | | | |
| FC66-64-770 | 1 | ((CONVERTIBLE))(W/AIR BAG) ) | | | |

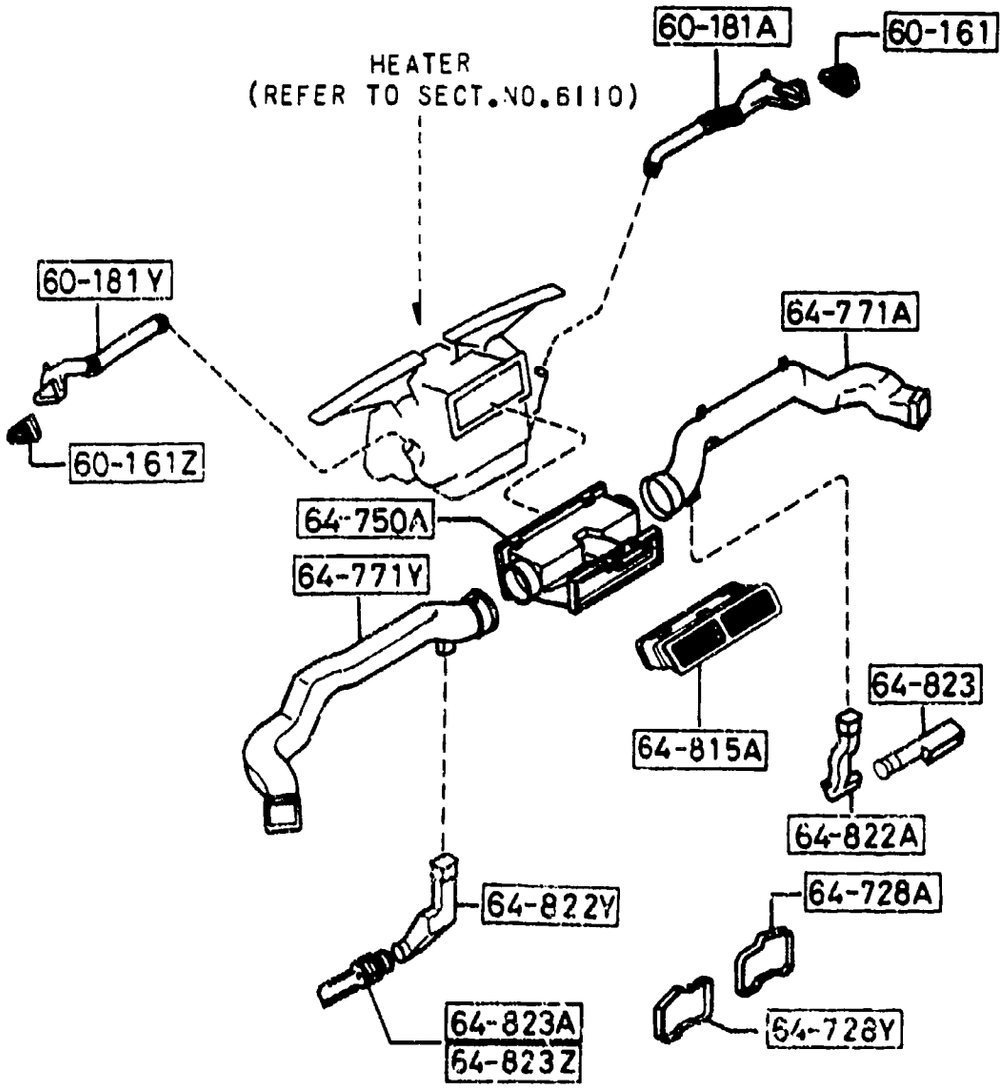


| PART NO. | QTY | MODEL/RESTRICTION | MODEL/RESTRICTION | MODEL/RESTRICTION | FROM-TO |
|---|---|---|---|---|---|
| 64-815A<br>FC01-64-840 | 1 | LOUVER,CENTER | | | |
| 64-822A<br>FB01-64-822 | 1 | DUCT NO.1(R),VENTILATOR ((CONVERTIBLE))(W/O AIR BAG) ) | | | |
| 64-822Y<br>FB01-64-832A | 1 | DUCT NO.1(L),LAP-VENT. ((CONVERTIBLE))(W/O AIR BAG) ) | | | |
| FC01-64-832 | 1 | (CPE) | | | |
| 64-823<br>FB01-64-823 | 1 | DUCT NO.2(R),LAP-VENT. ((CONVERTIBLE))(W/O AIR BAG) ) | | | |
| 64-823A<br>FB01-64-833 | 1 | DUCT NO.2,LAP-VENT. ((CONVERTIBLE))(W/O AIR BAG) ) | | | |
| 64-823Z<br>FC01-64-833 | 1 | DUCT NO.2(L),LAP VENT. (CPE) | | | |

(THIS ILLUSTRATION CONSISTS OF 4 PAGES)

| SPECIFICATIONS \ GRADE / SEAT TYPE | TURBO-OPT. | GXL-OPT. |
|---|---|---|
| | STI TYPE | STE TYPE |
| SEAT TRIM | LEATHER | LEATHER |
| |  | 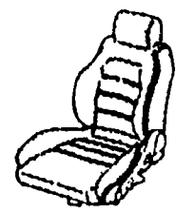 |
| HEADRESTRAINT — SEPARATE TYPE | – | × |
| REAR SEAT | – | – |





(THIS ILLUSTRATION CONSISTS OF 4 PAGES)

| GTU. | GTUS. TURBO. | GXL. | GXL. |
|---|---|---|---|
| STA TYPE | STG TYPE | STC TYPE | STD TYPE |
| CLOTH 'A' | CLOTH 'D' | CLOTH 'B' | CLOTH 'B' |
| | | | |
|  |  | 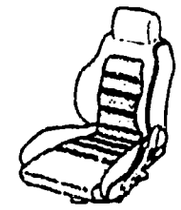 | 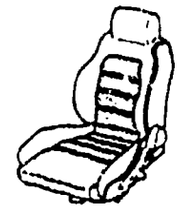 |
| – | – | × | × |
| – | – | – | × |

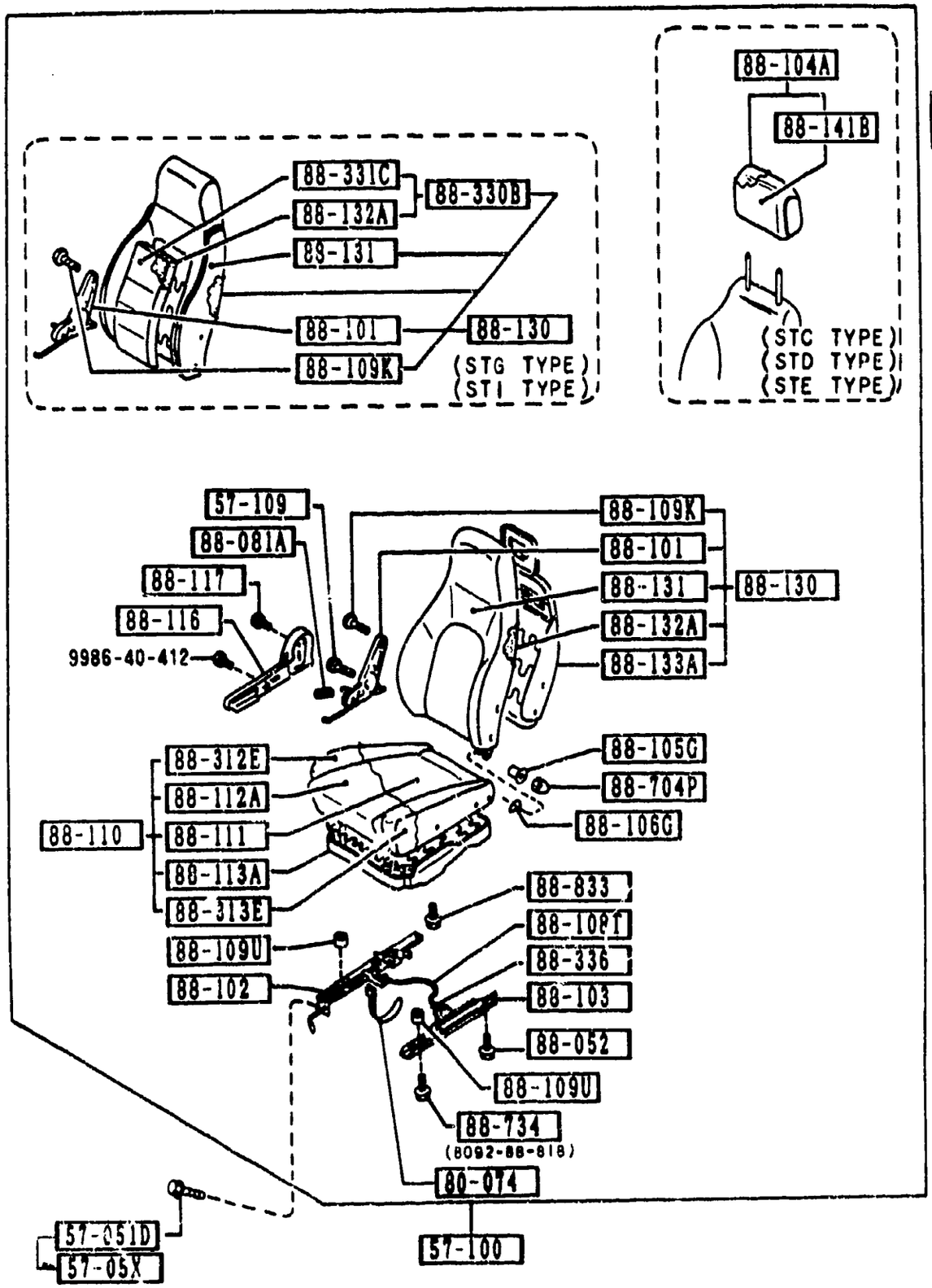
88-331C
88-330B
88-132A
88-131
88-101
88-130
88-109K
(STG TYPE)
(STI TYPE)
88-104A
88-141B
(STC TYPE)
(STD TYPE)
(STE TYPE)
57-109
88-081A
88-117
88-116
9986-40-412
88-109K
88-101
88-131
88-130
88-132A
88-133A
88-105G
88-704P
88-106G
88-312E
88-112A
88-110
88-111
88-113A
88-313E
88-833
88-108T
88-109U
88-102
88-336
88-103
88-052
88-109U
88-734
(8092-88-818)
80-074
57-051D
57-05X
57-100





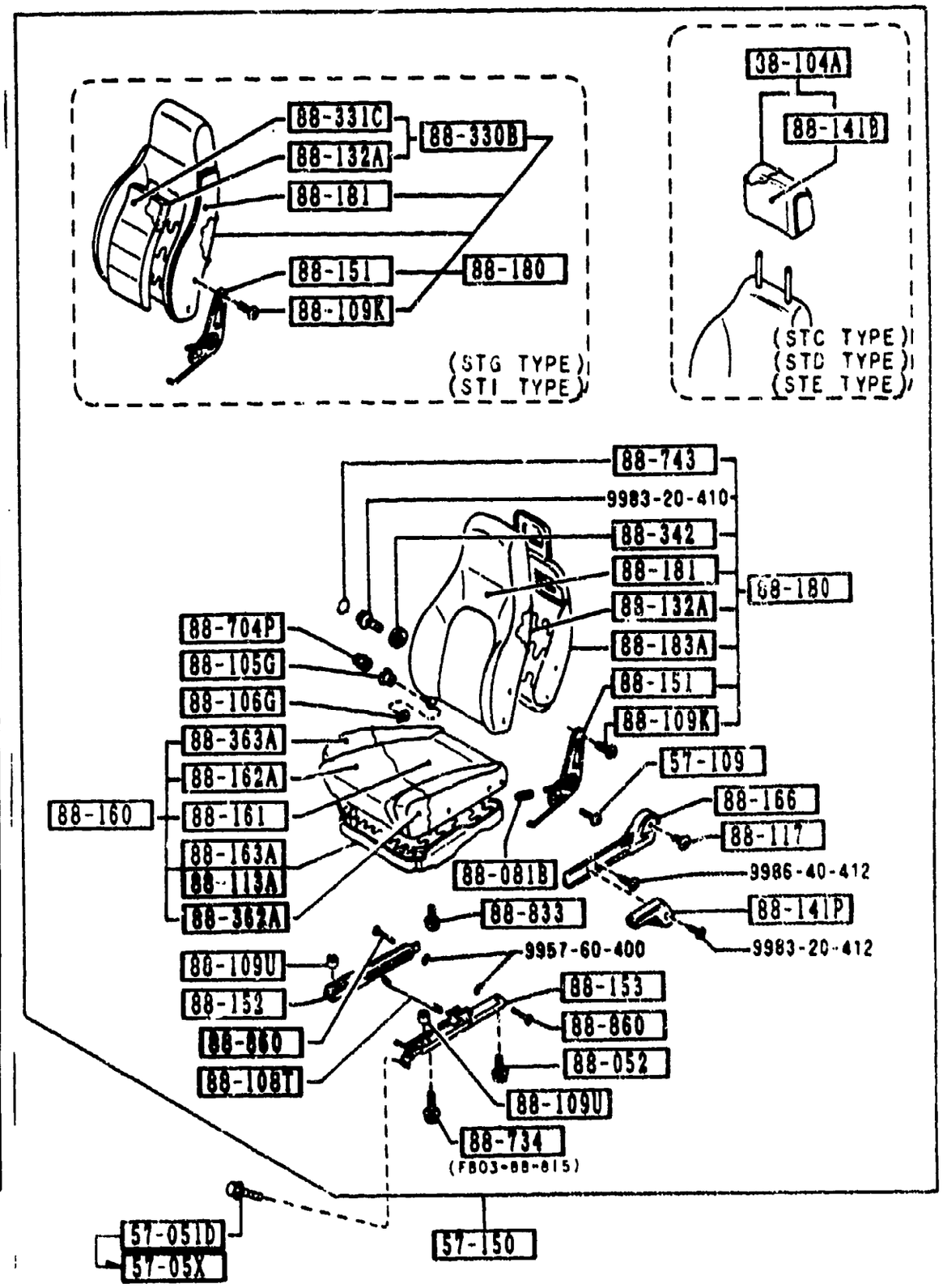
88-331C
88-330B
88-132A
88-181
88-151
88-180
88-109K
(STG TYPE)
(STI TYPE)
38-104A
88-141B
(STC TYPE)
(STD TYPE)
(STE TYPE)
88-743
9983-20-410
88-342
88-181
88-180
88-132A
88-183A
88-704P
88-105G
88-106G
88-151
88-109K
88-363A
88-162A
88-160
88-161
57-109
88-166
88-163A
88-117
88-113A
88-081B
9986-40-412
88-362A
88-833
88-141P
9957-60-400
9983-20-412
88-109U
88-153
88-153
88-860
88-860
88-052
88-108T
88-109U
88-734
(FB03-88-815)
57-051D
57-05X
57-150

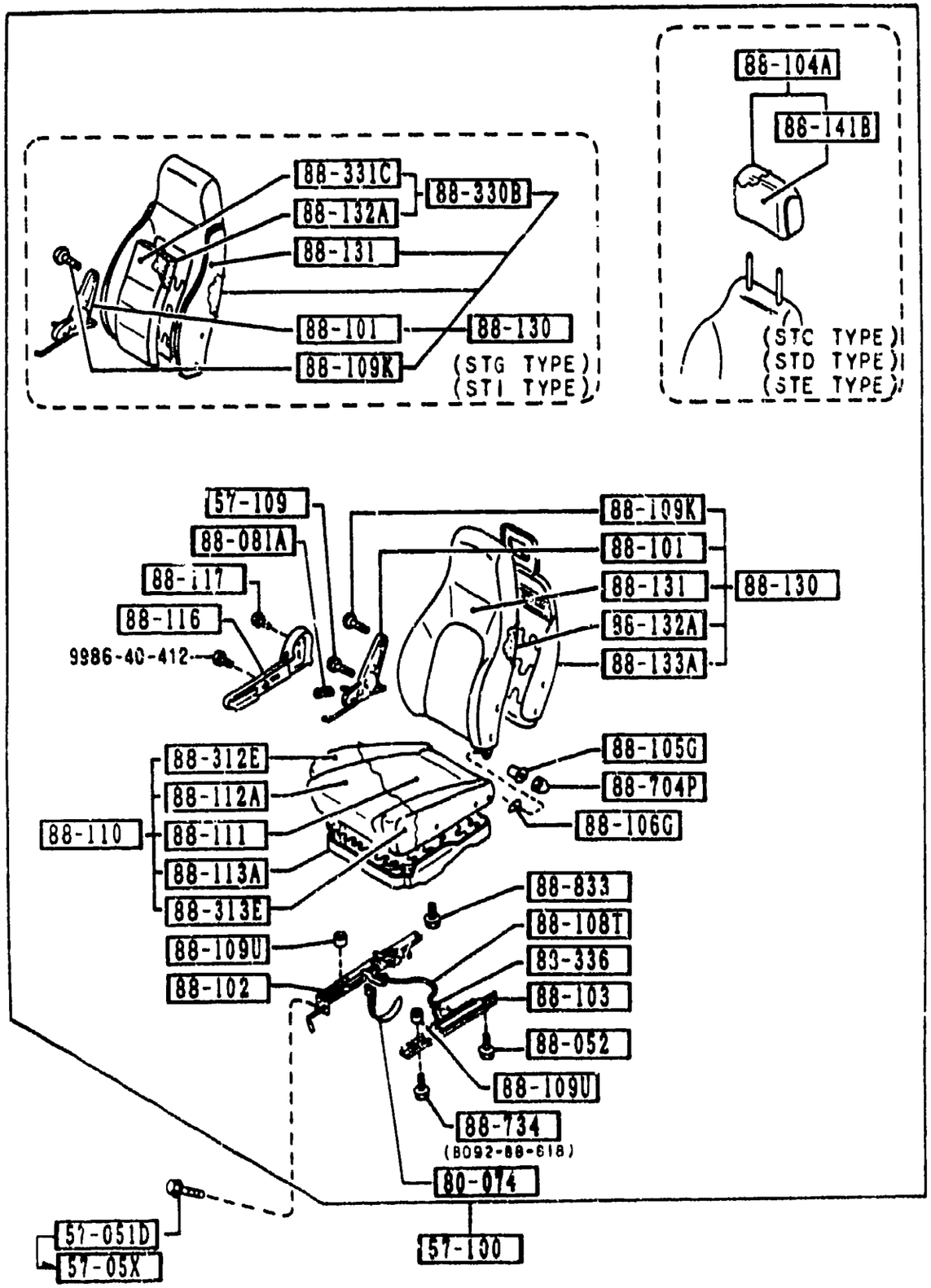






| PART NO. | QTY | MODEL/RESTRICTION | MODEL/RESTRICTION | MODEL/RESTRICTION | FROM-TO |
|---|---|---|---|---|---|
| 57-05X | | BOLT,LINK | | | |
| B455-57-05X | 8 | | | | 9324- |
| 57-051D | | BOLT,SET | | | |
| UB40-57-05X | 8 | | | | -9324 |
| 57-100 | | SEAT(R),FRONT | | | |
| FCY4-57-100 | 1 | 2-SEAT-GXL-OPT, (STE TYPE) | | | |
| 02 | | FD8 BLACK | | | |
| 48 | | FD9 BLUE | | | |
| FCY5-57-100 | 1 | TURBO-OPT, (STI TYPE) | | | |
| 02 | | FD8 BLACK | | | |
| 48 | | FD9 BLUE | | | |
| FC11-57-100A | 1 | | | | -9117 |
| A (FC11-57-100B) | | | | | |
| 02 | | FD8 BLACK | | | |
| 19 | | FE0 RED | | | |
| 48 | | FD9 BLUE | | | |
| FC13-57-100A | 1 | | | | -9117 |
| A (FC13-57-100B) | | | | | |
| 02 | | FD8 BLACK | | | |
| 19 | | FE0 RED | | | |
| 48 | | FD9 BLUE | | | |
| FC14-57-100A | 1 | | | | -9117 |
| A (FC14-57-100B) | | | | | |
| 02 | | FD8 BLACK | | | |
| 19 | | FE0 RED | | | |
| 48 | | FD9 BLUE | | | |
| FC17-57-100A | 1 | | | | -9117 |
| A (FC17-57-100B) | | | | | |
| 02 | | FD8 BLACK | | | |
| 48 | | FD9 BLUE | | | |
| FC17-57-100B | 1 | GTUS, TURBO, (STG TYPE) | | | 9117- |
| 02 | | FD8 BLACK | | | |
| 48 | | FD9 BLUE | | | |
| FC11-57-100B | 1 | | | | 9117-9701 |

9117 FC3####-700199
9324 FC3####-705162
9701 FC3####-709151

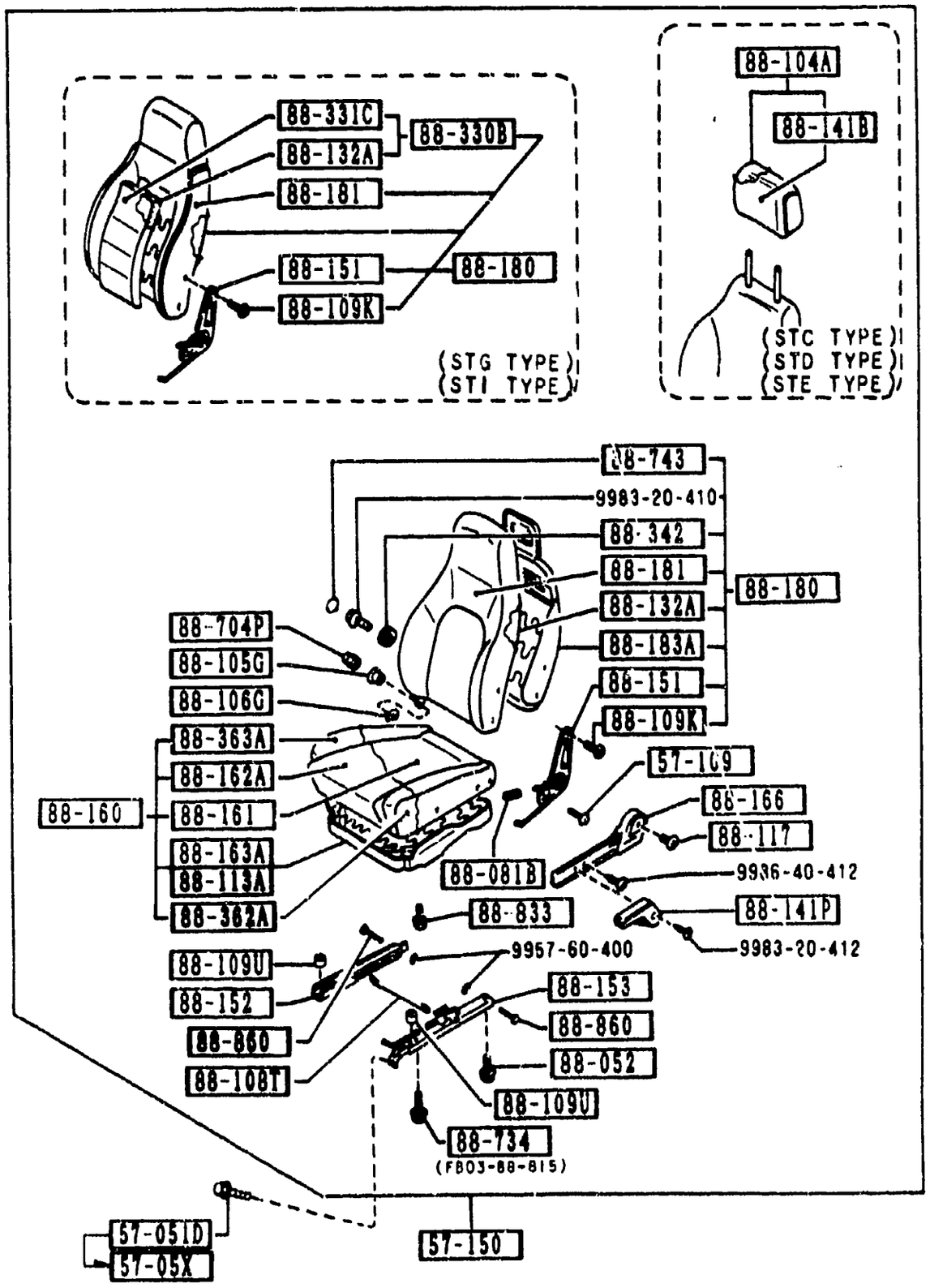






| PART NO. | QTY | MODEL/RESTRICTION | MODEL/RESTRICTION | MODEL/RESTRICTION | FROM-TO |
|---|---|---|---|---|---|
| CONT'D A (FC11-57-100C) | | | | | |
| 02 | | FD8 BLACK | | | |
| 19 | | FE0 RED | | | |
| 48 | | FD9 BLUE | | | |
| FC13-57-100B A (FC13-57-100C) | 1 | | | | 9117-9701 |
| 02 | | FD8 BLACK | | | |
| 19 | | FE0 RED | | | |
| 48 | | FD9 BLUE | | | |
| FC14-57-100B A (FC14-57-100C) | 1 | | | | 9117-9701 |
| 02 | | FD8 BLACK | | | |
| 19 | | FE0 RED | | | |
| 48 | | FD9 BLUE | | | |
| FC11-57-100C | 1 | GTU, (STA TYPE) | | | 9701- |
| 02 | | FD8 BLACK | | | |
| 19 | | FE0 RED | | | |
| 48 | | FD9 BLUE | | | |
| FC13-57-100C | 1 | 2-SEAT-GXL, (STC TYPE) | | | 9701- |
| 02 | | FD8 BLACK | | | |
| 19 | | FE0 RED | | | |
| 48 | | FD9 BLUE | | | |
| FC14-57-100C | 1 | 4-SEAT-GXL, (STD TYPE) | | | 9701- |
| 02 | | FD8 BLACK | | | |
| 19 | | FE0 RED | | | |
| 48 | | FD9 BLUE | | | |
| +----------+ \| 57-109 \| +----------+ | | SCREW,KNUCKLE | | | |
| 0259-57-109 | 4 | | | | |
| +----------+ \| 57-150 \| +----------+ | | SEAT(L),FRONT | | | |
| FCY4-57-150 | 1 | 2-SEAT-GXL-OPT, (STE TYPE) | | | |
| 02 | | FD8 BLACK | | | |
| 48 | | FD9 BLUE | | | |

9117 FC3NNN-700199
9701 FC3NNN-709151

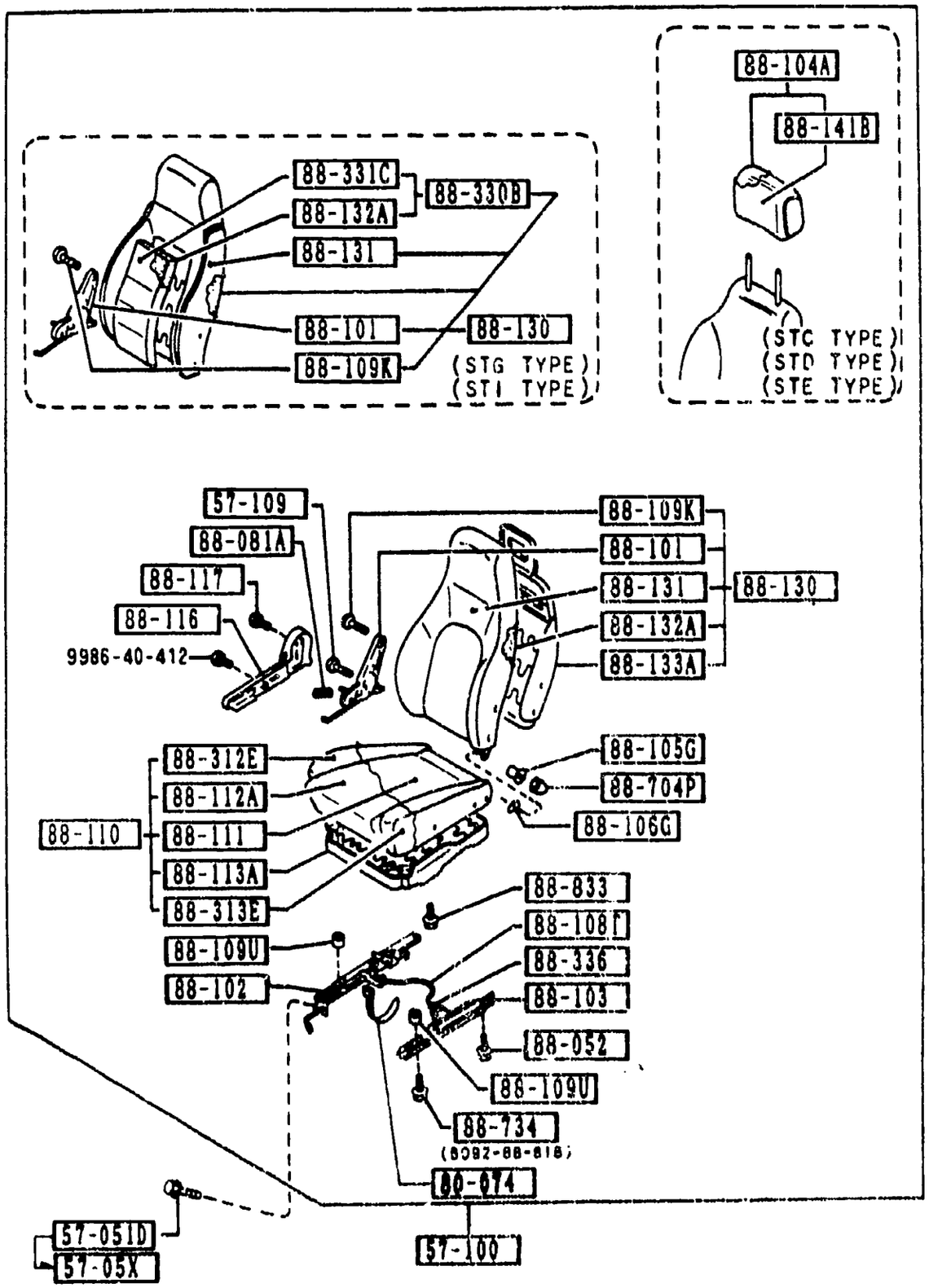






| PART NO. | QTY | MODEL/RESTRICTION | MODEL/RESTRICTION | MODEL/RESTRICTION | FROM-TO |
|---|---|---|---|---|---|
| CONT'D | | | | | |
| FCY5-57-150 | 1 | TURBO-OPT, (STI TYPE) | | | |
| 02 | | FD8 BLACK | | | |
| 48 | | FD9 BLUE | | | |
| FC17-57-150A | 1 | GTUS, TURBO, (STG TYPE) | | | |
| 02 | | FD8 BLACK | | | |
| 48 | | FD9 BLUE | | | |
| FC11-57-150A (FC11-57-150B) | 1 | | | | -9701 |
| 02 | | FD8 BLACK | | | |
| 19 | | FE0 RED | | | |
| 48 | | FD9 BLUE | | | |
| FC13-57-150A (FC13-57-150B) | 1 | | | | -9701 |
| 02 | | FD8 BLACK | | | |
| 19 | | FE0 RED | | | |
| 48 | | FD9 BLUE | | | |
| FC11-57-150B | 1 | GTU, (STA TYPE) | | | 9701- |
| 02 | | FD8 BLACK | | | |
| 19 | | FE0 RED | | | |
| 48 | | FD9 BLUE | | | |
| FC13-57-150B | 1 | GXL, (STC TYPE) (STD TYPE) | | | 9701- |
| 02 | | FD8 BLACK | | | |
| 19 | | FE0 RED | | | |
| 48 | | FD9 BLUE | | | |
| 80-074 | | BAND | | | |
| 3966-88-116 | 1 | | | | |
| 88-052 | | BOLT | | | |
| B093-88-818 | 4 | | | | |
| 88-081A | | KNOB(R),KNUCKLE | | | |
| B001-88-081 | 1 | | | | |
| 02 | | FD8 BLACK | | | |

9701 FC3####-709151



3 N1 1

SECTION NAME INDEX (BODY)1/2

| LO.NO | SEC.NO | SECTION NAME |
|---|---|---|
| 3-C03 | 0900 | KEY SETS |
| 3-F03 | 5000 | FRONT BUMPER |
| 3-H03 | 5010 | REAR BUMPER |
| 3-J03 | 5020 | HEAD LAMP CLEANER |
| 3-L03 | 5030 | WINDOW MOULDINGS |
| 3-M03 | 5040 | BODY MOULDINGS (COUPE) |
| 3-E04 | 5060 | SIDE PROTECTORS |
| 3-I04 | 5100 | HEAD LAMPS |
| 3-J04 | 5103 | HEAD LAMP RETRACTORS |
| 3-N04 | 5105 | FRONT COMBINATION LAMPS |
| 3-G05 | 5110 | REAR COMBINATION LAMPS |
| 3-K05 | 5120 | LICENSE LAMPS |
| 3-M05 | 5125 | INTERIOR LAMPS |
| 3-N05 | 5130 | OVERHEAD CONSOLE |
| 3-C06 | 5170 | ORNAMENTS |
| 3-D06 | 5180 | COWL & EXTRACTOR GRILLES |
| 3-G06 | 5230 | BONNET |
| 3-J06 | 5260 | TRUNK LID (CONVERTIBLE) |
| 3-L06 | 5310 | BODY PANELS (FRONT) (COUPE) |
| 3-C07 | 5310 A | BODY PANELS (FRONT) (CONVERTIBLE) |
| 3-F07 | 5320 | BODY PANELS (FENDER & WHEEL APRON) |
| 3-K07 | 5330 | BODY PANELS (DASH & COWL PANEL) |
| 3-L07 | 5340 | BODY PANELS (SIDE) (COUPE) |
| 3-E08 | 5340A | BODY PANELS (SIDE) (CONVERTIBLE) |
| 3-K08 | 5360 | BODY PANELS (ROOF) (W/O SUN ROOF) |
| 3-L08 | 5360 A | BODY PANELS (ROOF) (SUN ROOF) |
| 3-M08 | 5370 | BODY PANELS (FLOOR) (COUPE) |
| 3-D09 | 5370 A | BODY PANELS (FLOOR) (CONVERTIBLE) |
| 3-H09 | 5380 | FLOOR ATTACHMENTS (HOLE COVERS) |
| 3-J09 | 5390 | FLOOR ATTACHMENTS |
| 3-C10 | 5500 | DASHBOARD EQUIPMENTS |
| 3-F10 | 5520 | METER HOOD |
| 3-G10 | 5530 | SPEEDOMETER CABLE |
| 3-H10 | 5540 | METER COMPONENTS |
| 3-J10 | 5560 | DASHBOARD & RELATED PARTS |
| 3-E11 | 5570 | CONSOLE |
| 3-H11 | 5580 | VENTILATOR |
| 3-J11 | 5700 | FRONT SEATS (COUPE) |
| 3-E13 | 5700A | FRONT SEATS (CONVERTIBLE) |
| 3-K13 | 5750 | REAR SEATS (COUPE) |
| 3-M13 | 5790 | SEAT BELTS (COUPE) |
| 3-C14 | 5790A | SEAT BELTS (CONVERTIBLE) |
| 3-D14 | 5800 | FRONT DOORS (COUPE) |
| 3-G14 | 5800A | FRONT DOORS (CONVERTIBLE) |
| 3-K14 | 5830 | FRONT DOOR MECHANISMS (COUPE) |
| 3-F15 | 5830A | FRONT DOOR MECHANISMS (CONVERTIBLE) |
| 3-J15 | 5840 | FRONT DOOR TRIMS & RELATED PARTS (COUPE) |
| 3-H16 | 5840A | FRONT DOOR TRIMS & RELATED PARTS (CONVERTIBLE) |

| LO.NO | SEC.NO | SECTION NAME |
|---|---|---|

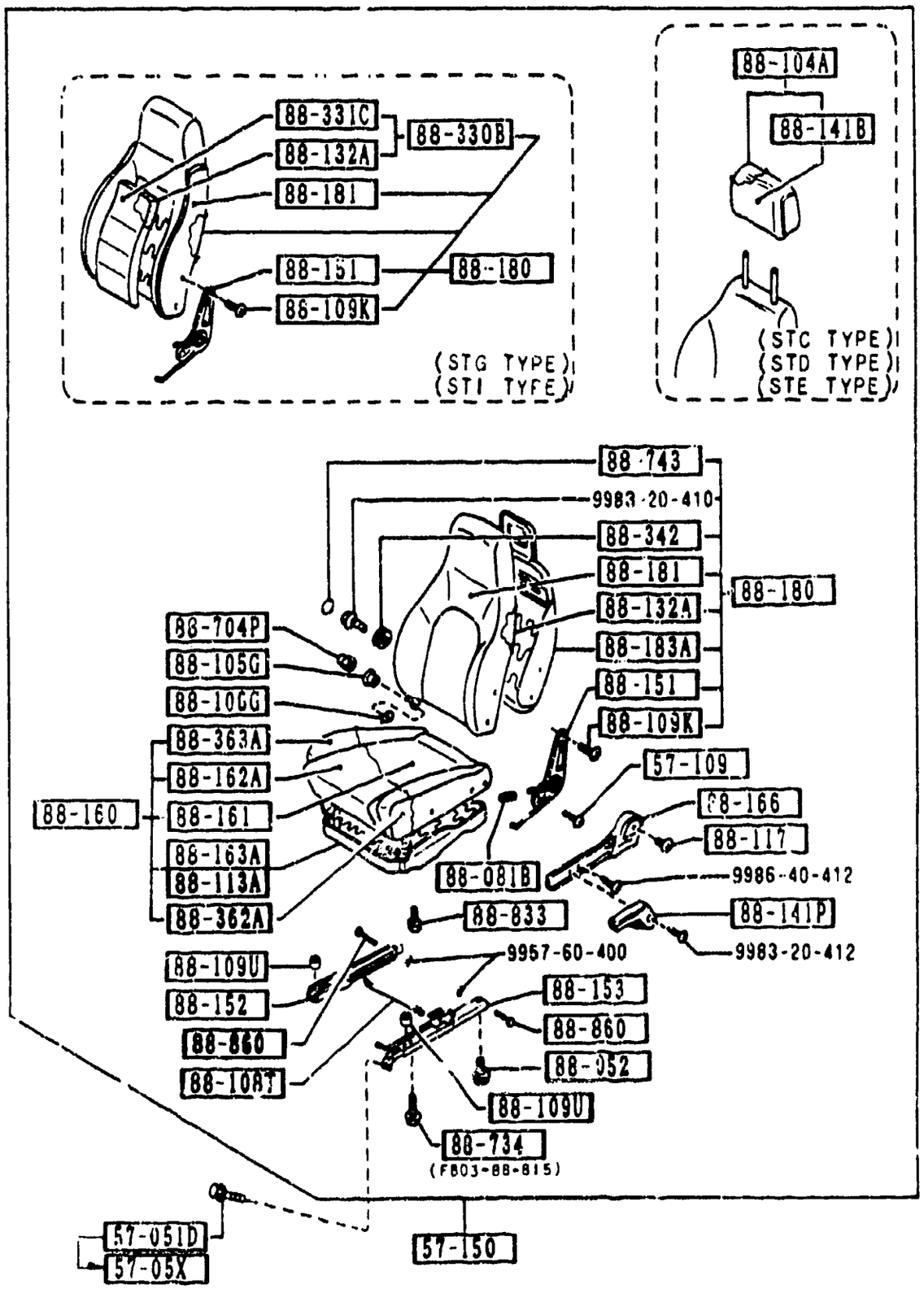






| PART NO. | QTY | MODEL/RESTRICTION | MODEL/RESTRICTION | MODEL/RESTRICTION | FROM-TO |
|---|---|---|---|---|---|
| CONT'D | | | | | |
| 19 | | FE0 RED | | | |
| 48 | | FD9 BLUE | | | |
| 88-081B | | KNOB(L),KNUCKLE | | | |
| B001-88-091 | 1 | | | | |
| 02 | | FD8 BLACK | | | |
| 19 | | FE0 RED | | | |
| 48 | | FD9 BLUE | | | |
| 88-101 | | KNUCKLE(R),RECLINING | | | |
| FD01-88-101 | 1 | GTU, 2-SEAT-GXL, 2-SEAT-GXL-OPT, GTUS, TURBO, TURBO-OPT, (STA TYPE) (STC TYPE) (STE TYPE) (STG TYPE) (STI TYPE) | | | |
| FC02-88-101 | 1 | 4-SEAT-GXL, (STD TYPE) | | | |
| 88-102 | | ADJUSTER,NO.1 | | | |
| FC01-88-102A | 1 | | | | |
| 88-103 | | ADJUSTER,NO.2 | | | |
| FC50-88-103 | 1 | | | | |
| 88-104A | | RESTRAINT,HEAD | | | |
| FC03-88-[illegible]0 | 2 | GXL, (STC TYPE) (STD TYPE) | | | |
| 02 | | FD8 BLACK | | | |
| 19 | | FE0 RED | | | |
| 48 | | FD9 BLUE | | | |
| FC70-88-140 | 2 | 2-SEAT-GXL-OPT, (STE TYPE) | | | |
| 02 | | FD8 BLACK | | | |
| 48 | | FD9 BLUE | | | |
| 88-105G | | BUSH,HINGE | | | |
| FB01-88-107 | 2 | | | | |
| 88-106G | | WASHER,HINGE | | | |

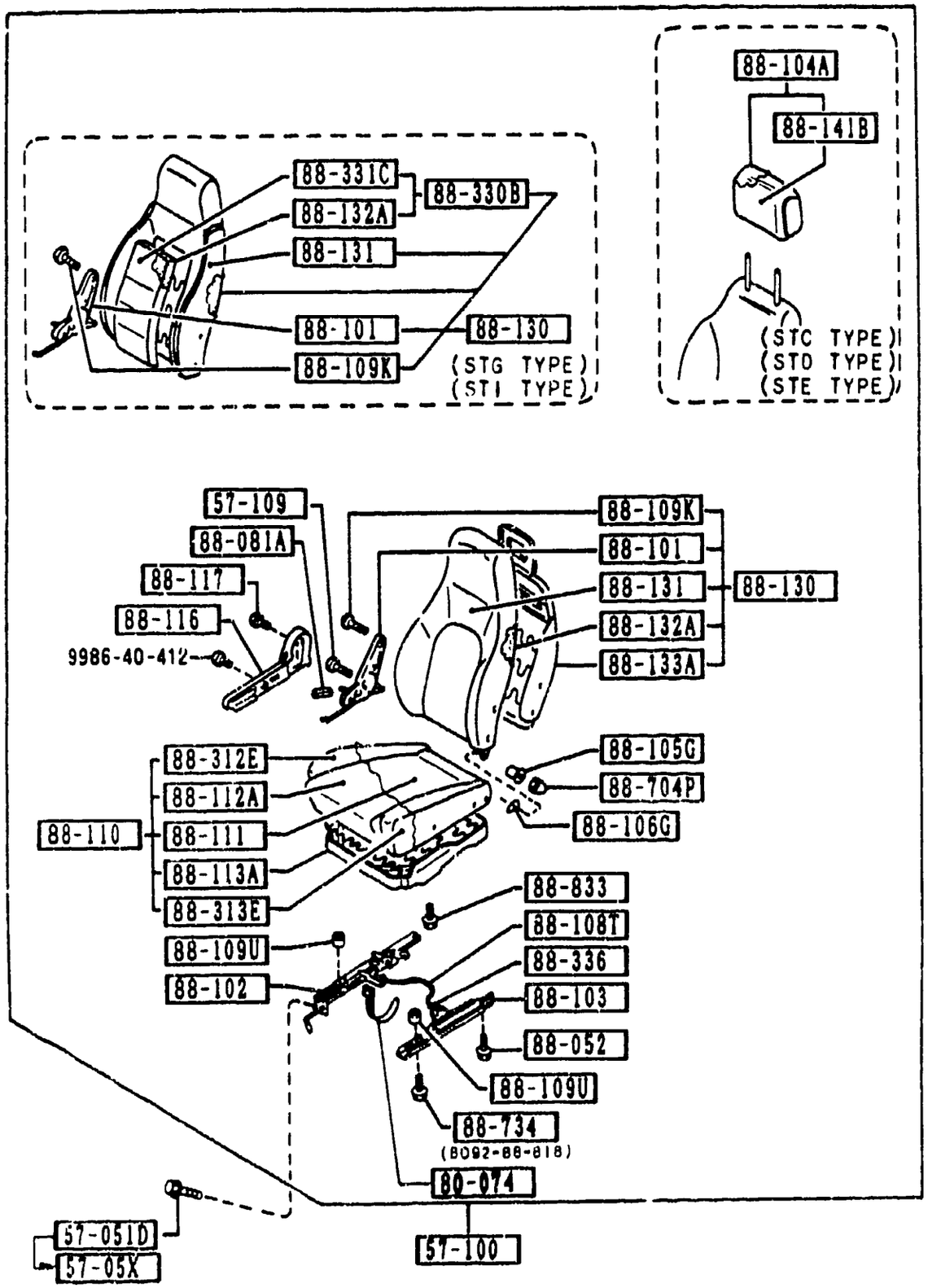






| PART NO. | QTY | MODEL/RESTRICTION | MODEL/RESTRICTION | MODEL/RESTRICTION | FROM-TO |
|---|---|---|---|---|---|
| CONT'D | | | | | |
| FB01-88-105 | 2 | | | | |
| 88-108T | | WIRE,RELEASE | | | |
| F062-88-106 | 1 | (FOR RIGHT) | | | |
| H115-88-108 | 1 | (FOR LEFT) | | | |
| 88-109K | | SCREW,KNUCKLE | | | |
| B095-88-109 | 4 | | | | |
| 88-109U | | SPACER | | | |
| FB44-88-109 | 4 | GTUS, TURBO, TURBO-OPT, (STG TYPE) (STI TYPE) | | | |
| 88-110 | | CUSHION(R),FRT SEAT | | | |
| FC07-88-110 | 1 | GTUS, TURBO, (STG TYPE) | | | -9117 |
| 02 | | FD8 BLACK | | | |
| 48 | | FD9 BLUE | | | |
| FC71-88-110 | 1 | TURBO-OPT, (STI TYPE) | | | -9117 |
| 02 | | FD8 BLACK | | | |
| 19 | | FE0 RED | | | |
| 48 | | FD9 BLUE | | | |
| FC11-88-110 A (FC11-88-110A) | 1 | | | | -9701 |
| 02 | | FD8 BLACK | | | |
| 19 | | FE0 RED | | | |
| 48 | | FD9 BLUE | | | |
| FC13-88-110 A (FC13-88-110A) | 1 | | | | -9701 |
| 02 | | FD8 BLACK | | | |
| 19 | | FE0 RED | | | |
| 48 | | FD9 BLUE | | | |
| FC70-88-110 | 1 | 2-SEAT-GXL-OPT, (STE TYPE) | | | -9701 |
| 02 | | FD8 BLACK | | | |
| 48 | | FD9 BLUE | | | |
| FCX7-88-1108 | 1 | GTUS, TURBO, (STG TYPE) | | | 9117- |

9117 FC3####-700199
9701 FC3####-709151

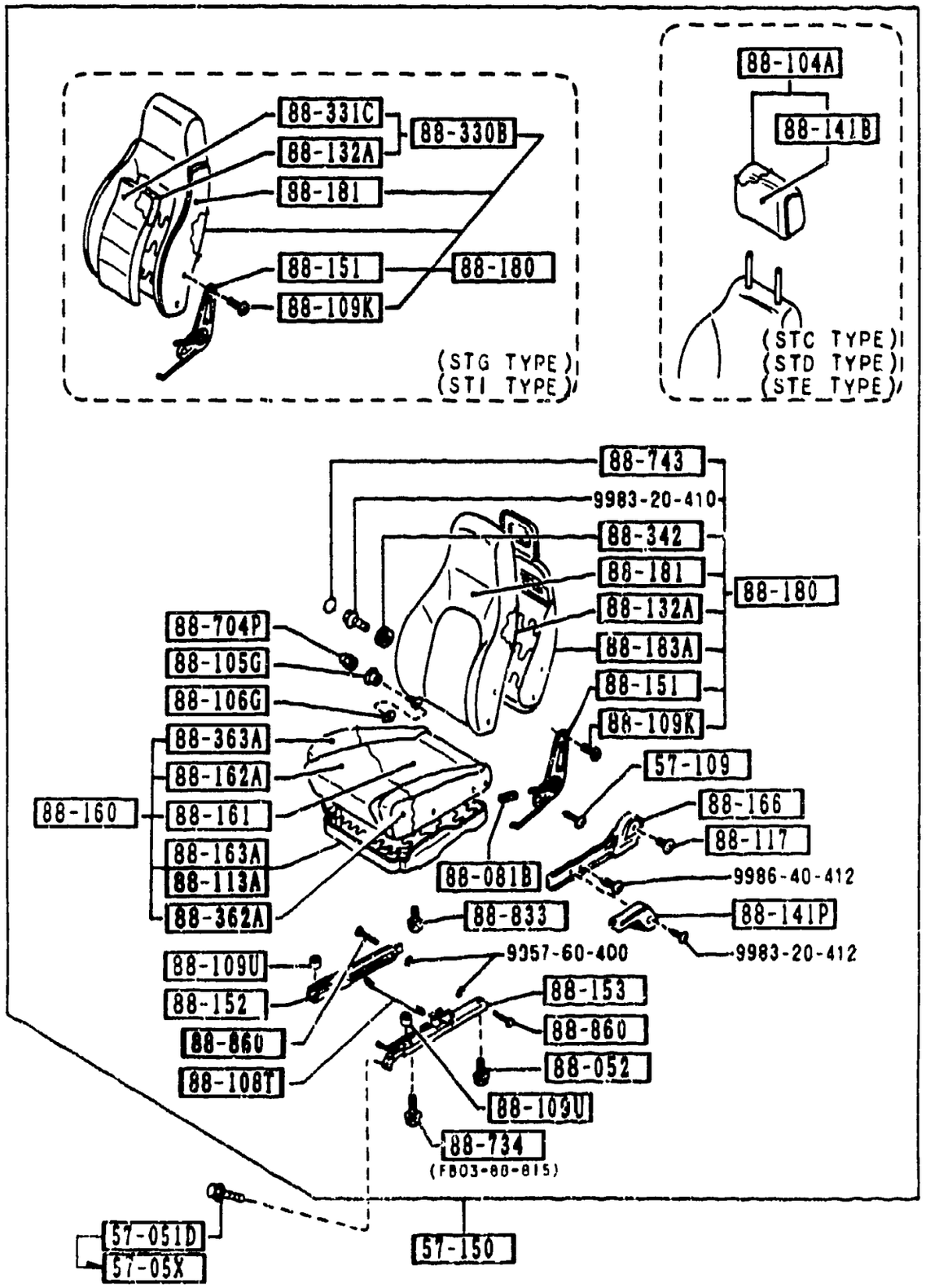






| PART NO. | QTY | MODEL/RESTRICTION | MODEL/RESTRICTION | MODEL/RESTRICTION | FROM-TO |
|---|---|---|---|---|---|
| CONT'D | | | | | |
| 02 | | FD8 BLACK | | | |
| 48 | | FD9 BLUE | | | |
| FCY5-88-110 | 1 | TURBO-OPT, (STI TYPE) | | | 9117- |
| 02 | | FD8 BLACK | | | |
| 48 | | FD9 BLUE | | | |
| FCY4-88-110A | 1 | 2-SEAT-GXL-OPT, (STE TYPE) | | | 9701- |
| 02 | | FD8 BLACK | | | |
| 48 | | FD9 BLUE | | | |
| FC11-88-110A | 1 | GTU, (STA TYPE) | | | 9701- |
| 02 | | FD8 BLACK | | | |
| 19 | | FE0 RED | | | |
| 48 | | FD9 BLUE | | | |
| FC13-88-110A | 1 | GXL, (STC TYPE) (STD TYPE) | | | 9701- |
| 02 | | FD8 BLACK | | | |
| 19 | | FE0 RED | | | |
| 48 | | FD9 BLUE | | | |
| +88-111+ | | TRIM(R),SEAT CUSHION | | | |
| FB46-88-111 | 1 | TURBO-OPT, (STI TYPE) | | | |
| 02 | | FD8 BLACK | | | |
| 48 | | FD9 BLUE | | | |
| FC07-88-111 | 1 | GTUS, TURBO, (STG TYPE) | | | |
| 02 | | FD8 BLACK | | | |
| 48 | | FD9 BLUE | | | |
| FC70-88-111A | 1 | 2-SEAT-GXL-OPT, (STE TYPE) | | | |
| 02 | | FD8 BLACK | | | |
| 48 | | FD9 BLUE | | | |
| FC01-88-111A (FC01-88-111A) | 1 | | | | -9701 |
| 02 | | FD8 BLACK | | | |
| 19 | | FE0 RED | | | |

9117 FC3####-700199
9701 FC3####-709151

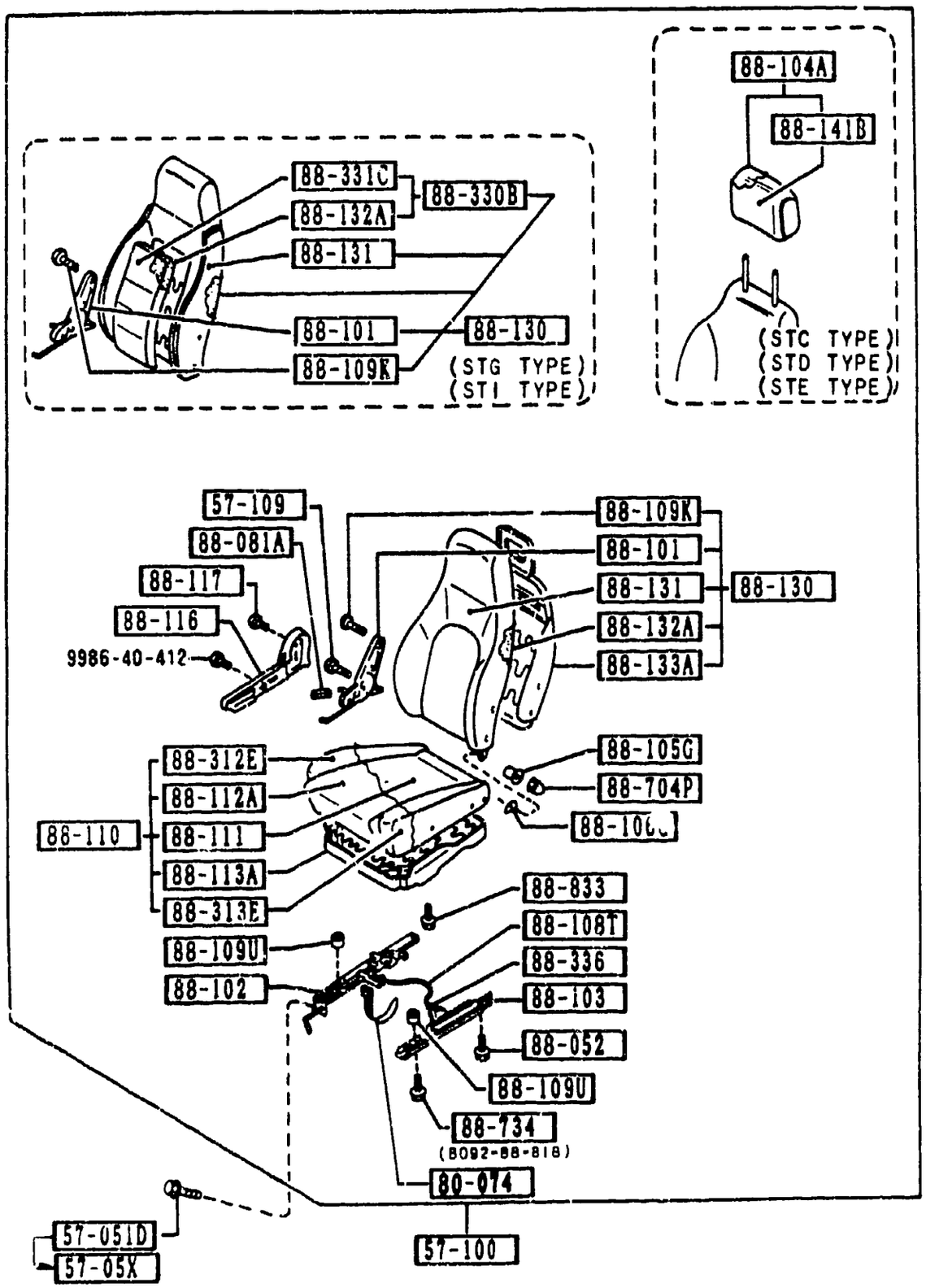




| PART NO. | QTY | MODEL/RESTRICTION | MODEL/RESTRICTION | MODEL/RESTRICTION | FROM-TO |
|---|---|---|---|---|---|
| CONT'D | | | | | |
| 48 | | FD9 BLUE | | | |
| FC03-88-111A (FC03-88-111A) | 1 | | | | -9701 |
| 02 | | FD8 BLACK | | | |
| 19 | | FE0 RED | | | |
| 48 | | FD9 BLUE | | | |
| FC01-88-111A | 1 | GTU,<br>(STA TYPE) | | | 9701- |
| 02 | | FD8 BLACK | | | |
| 19 | | FE0 RED | | | |
| 48 | | FD9 BLUE | | | |
| FC03-88-111A | 1 | GXL,<br>(STC TYPE)<br>(STD TYPE) | | | 9701- |
| 02 | | FD8 BLACK | | | |
| 19 | | FE0 RED | | | |
| 48 | | FD9 BLUE | | | |
| +----------+<br>\| 88-112A \|<br>+----------+ | | PAD(R),CUSHION-FRT | | | |
| FB44-88-112 | 1 | TURBO-OPT, GTUS, TURBO,<br>(STI TYPE)<br>(STG TYPE) | | | |
| FC01-88-112 | 1 | GTU,<br>(STA TYPE) | | | |
| FC03-88-112 | 1 | 2-SEAT-GXL-OPT, GXL,<br>(STE TYPE)<br>(STC TYPE)<br>(STD TYPE) | | | |
| +----------+<br>\| 88-113A \|<br>+----------+ | | FRAME(R),CUSHION-FRT | | | |
| FB44-88-113 | 1 | GTUS, TURBO, TURBO-OPT,<br>(STG TYPE)<br>(STI TYPE) | | | |
| FC11-88-113A (FC11-88-113A) | 2 | | | | -9701 |
| FC13-88-113A (FC13-88-113A) | 1 | | | | -9701 |
| FC11-88-113A | 2 | GTU,<br>(STA TYPE) | | | 9701- |
| FC13-88-113A | 1 | GXL, 2-SEAT-GXL-OPT,<br>(STC TYPE)<br>(STD TYPE)<br>(STE TYPE) | | | 9701- |

9701 FC3####-709151

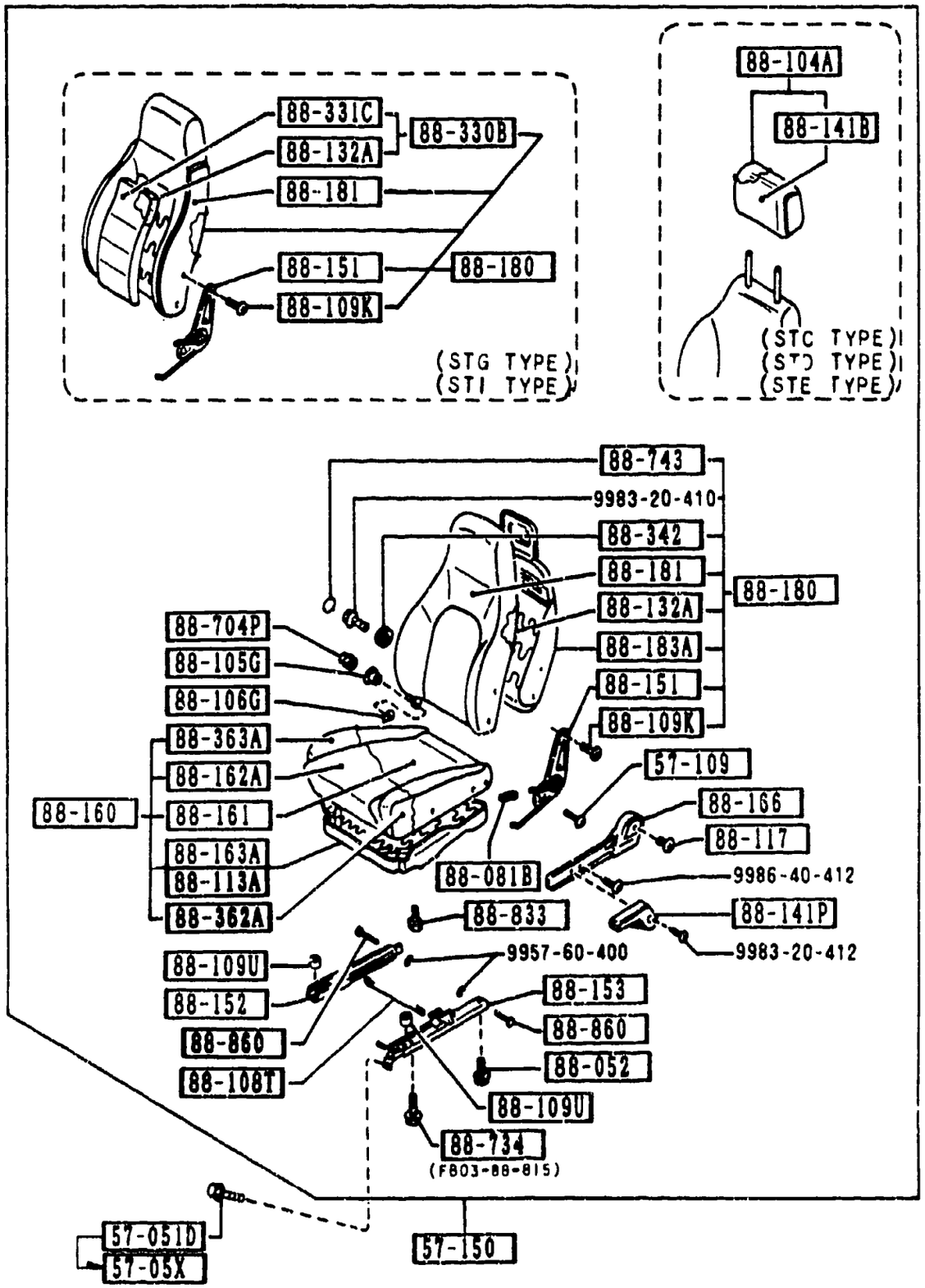




| PART NO. | QTY | MODEL/RESTRICTION | MODEL/RESTRICTION | MODEL/RESTRICTION | FROM-TO |
|---|---|---|---|---|---|
| 88-116 | | COVER(R),KNUCKLE | | | |
| FC01-88-127 | 1 | GTUS, TURBO,<br>(STG TYPE) | | | |
| 02 | | FD8 FE1 BLACK | | | |
| 19 | | FE0 RED | | | |
| 48 | | FD9 BLUE | | | |
| FC11-88-127A | 1 | TURBO-OPT, GTU, 2-SE<br>AT-GXL-OPT, GXL,<br>(STI TYPE)<br>(STA TYPE)<br>(STE TYPE)<br>(STC TYPE)<br>(STD TYPE) | | | |
| 02 | | FD8 FE1 BLACK | | | |
| 19 | | FE0 RED | | | |
| 48 | | FD9 BLUE | | | |
| 88-117 | | SCREW,KNUCKLE | | | |
| 1243-88-117 | 2 | | | | |
| 88-130 | | BACK(R),FRONT SEAT | | | |
| FC01-88-130 | 1 | GTU,<br>(STA TYPE) | | | |
| 02 | | FD8 BLACK | | | |
| 19 | | FE0 RED | | | |
| 48 | | FD9 BLUE | | | |
| FC03-88-130 | 1 | 2-SEAT-GXL,<br>(STC TYPE) | | | |
| 02 | | FD8 BLACK | | | |
| 19 | | FE0 RED | | | |
| 48 | | FD9 BLUE | | | |
| FC04-88-130 | 1 | 4-SEAT-GXL,<br>(STD TYPE) | | | |
| 02 | | FD8 BLACK | | | |
| 19 | | FE0 RED | | | |
| 48 | | FD9 BLUE | | | |
| FC07-88-130 | 1 | GTUS, TURBO,<br>(STG TYPE) | | | |
| 02 | | FD8 BLACK | | | |
| 48 | | FD9 BLUE | | | |
| FC70-88-130 | 1 | 2-SEAT-GXL-OPT, | | | |

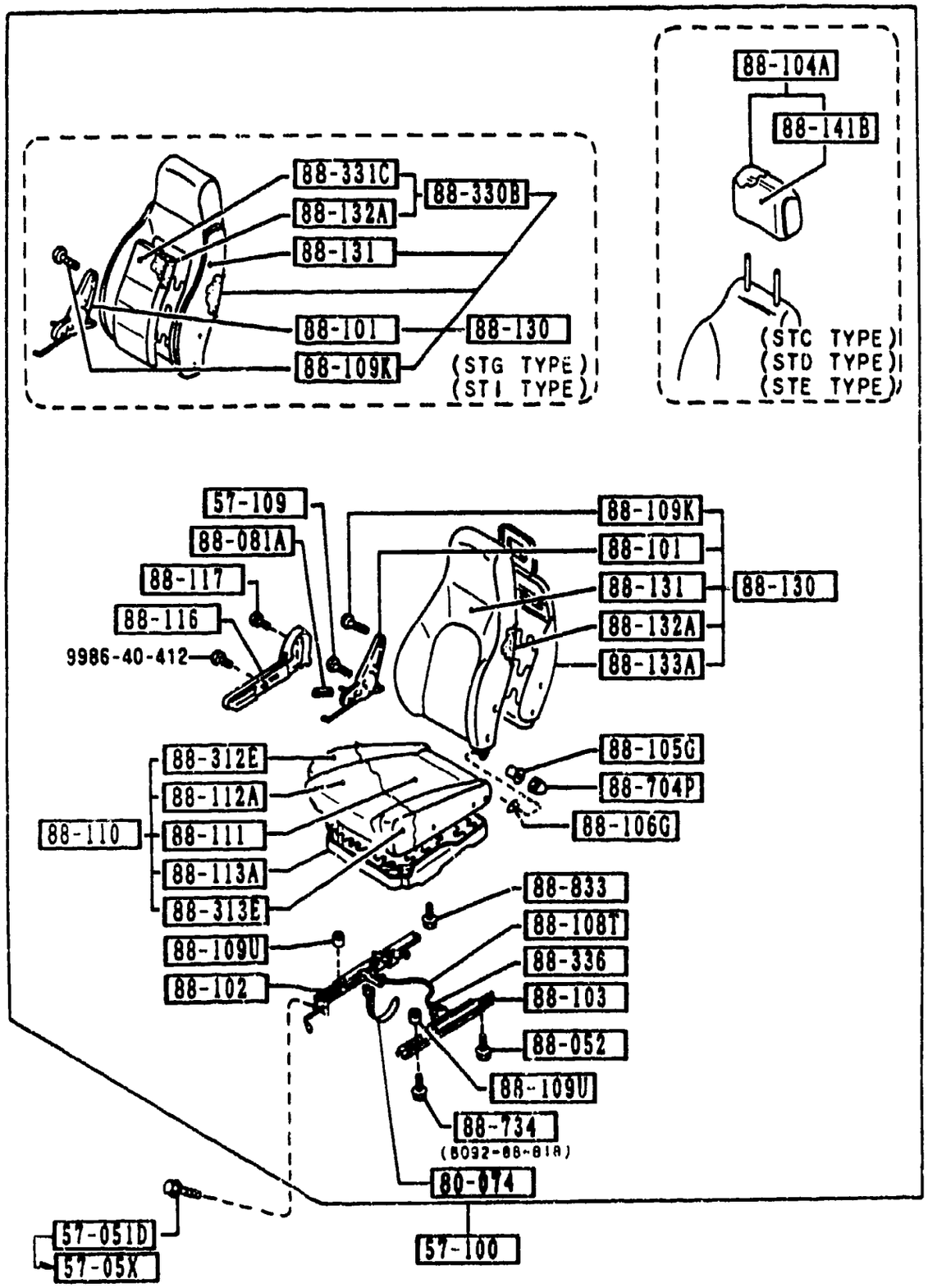






| PART NO. | QTY | MODEL/RESTRICTION | MODEL/RESTRICTION | MODEL/RESTRICTION | FROM-TO |
|---|---|---|---|---|---|
| CONT'D | | (STE TYPE) | | | |
| 02 | | FD8 BLACK | | | |
| 48 | | FD9 BLUE | | | |
| FC71-88-130 | 1 | TURBO-OPT, (STI TYPE) | | | |
| 02 | | FD8 BLACK | | | |
| 48 | | FD9 BLUE | | | |
| +----------+ | | | | | |
| \| 88-131 \| | | TRIM(R),SEAT BACK | | | |
| +----------+ | | | | | |
| FB46-88-131 | 1 | TURBO-OPT, (STI TYPE) | | | |
| 02 | | FD8 BLACK | | | |
| 48 | | FD9 BLUE | | | |
| FC01-88-131 | 1 | GTU, (STA TYPE) | | | |
| 02 | | FD8 BLACK | | | |
| 19 | | FE0 RED | | | |
| 48 | | FD9 BLUE | | | |
| FC03-88-131 | 1 | GXL, (STC TYPE) (STD TYPE) | | | |
| 02 | | FD8 BLACK | | | |
| 19 | | FE0 RED | | | |
| 48 | | FD9 BLUE | | | |
| FC07-88-131 | 1 | GTUS, TURBO, (STG TYPE) | | | |
| 02 | | FD8 BLACK | | | |
| 48 | | FD9 BLUE | | | |
| FC70-88-131 | 1 | 2-SEAT-GXL-OPT, (STE TYPE) | | | |
| 02 | | FD8 BLACK | | | |
| 48 | | FD9 BLUE | | | |
| +----------+ | | | | | |
| \| 88-132A \| | | PAD(R),BACK-FRT | | | |
| +----------+ | | | | | |
| FB44-88-132 | 2 | GTUS, TURBO, (STG TYPE) | | | |
| FC01-88-132 | 2 | GTU, (STA TYPE) | | | |
| FC03-88-132 | 2 | 2-SEAT-GXL-OPT, GXL, (STE TYPE) (STC TYPE) | | | |

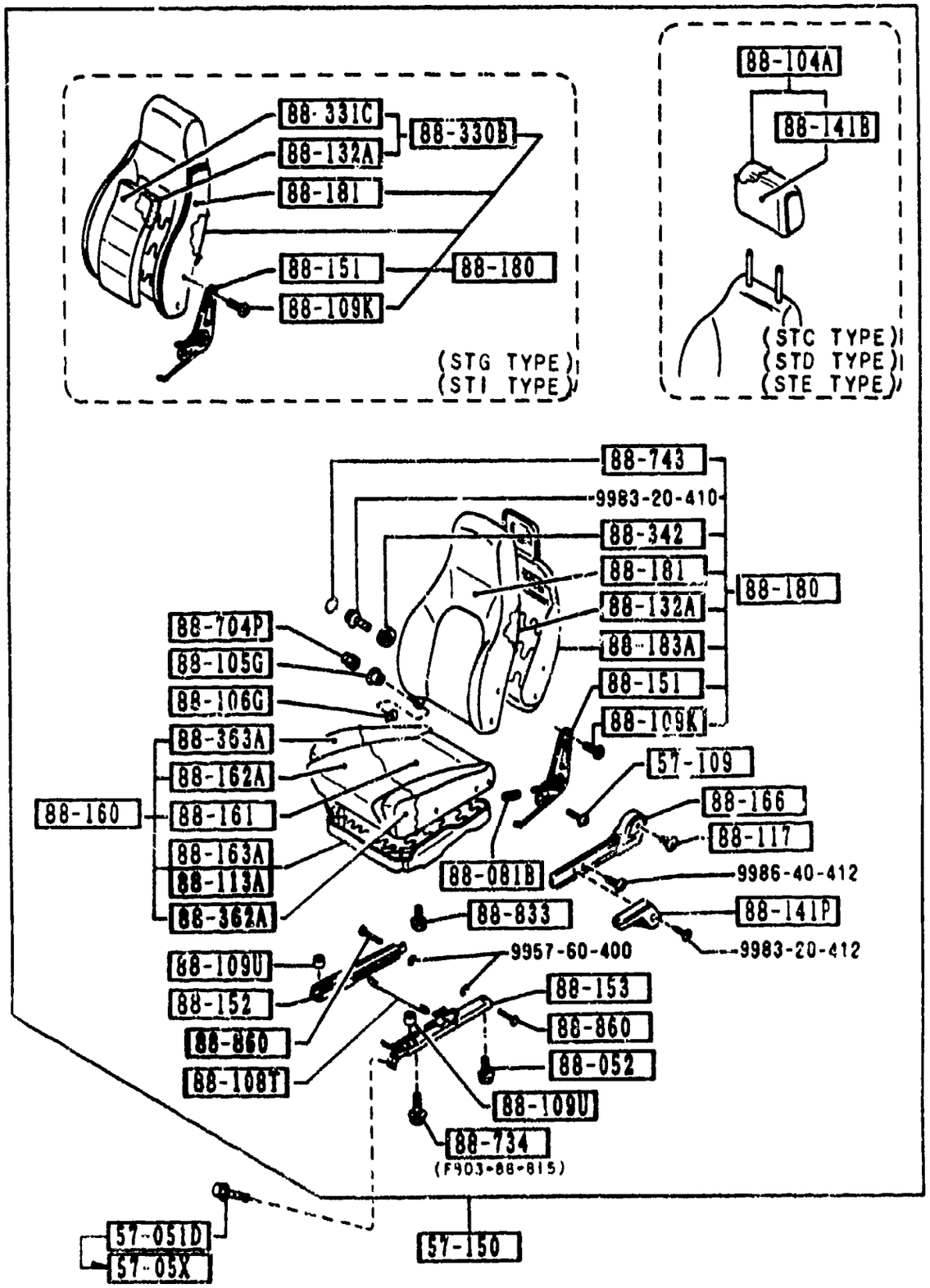




5700 -10 FRONT SEATS
(COUPE)

| PART NO. | QTY | MODEL/RESTRICTION | MODEL/RESTRICTION | MODEL/RESTRICTION | FROM-TO |
|---|---|---|---|---|---|
| CONT'D | | (STD TYPE) | | | |
| +88-133A+ | | FRAME(R),BACK-FRT | | | |
| FC01-88-133 | 1 | GTU,<br>(STA TYPE) | | | |
| FC03-88-133 | 1 | GXL, 2-SEAT-GXL-OPT,<br>(STC TYPE)<br>(STD TYPE)<br>(STE TYPE) | | | |
| +88-141B+ | | TRIM,HEAD REST-FRT | | | |
| FC03-88-141 | 2 | GXL,<br>(STC TYPE)<br>(STD TYPE) | | | |
| 02 | | FD8 BLACK | | | |
| 19 | | FE0 RED | | | |
| 48 | | FD9 BLUE | | | |
| FC70-88-141 | 2 | 2-SEAT-GXL-OPT,<br>(STE TYPE) | | | |
| 02 | | FD8 BLACK | | | |
| 48 | | FD9 BLUE | | | |
| +88-141P+ | | LEVER,LIFTER | | | |
| FA58-88-831 | 1 | GXL, 2-SEAT-GXL-OPT,<br>(STC TYPE)<br>(STD TYPE)<br>(STE TYPE) | | | |
| 02 | | FD8 FE1 BLACK | | | |
| 19 | | FE0 RED | | | |
| 48 | | FD9 BLUE | | | |
| +88-151+ | | KNUCKLE(L),RECLINING | | | |
| FB01-88-151 | 1 | | | | |
| +88-152+ | | ADJUSTER NO.3 | | | |
| FC01-88-152 | 1 | GTU, GTUS, TURBO, TURBO-OPT,<br>(STA TYPE)<br>(STG TYPE)<br>(STI TYPE) | | | |
| FC03-88-152 | 1 | GXL, 2-SEAT-GXL-OPT,<br>(STC TYPE)<br>(STD TYPE)<br>(STE TYPE) | | | |
| +88-153+ | | ADJUSTER NO.4 | | | |

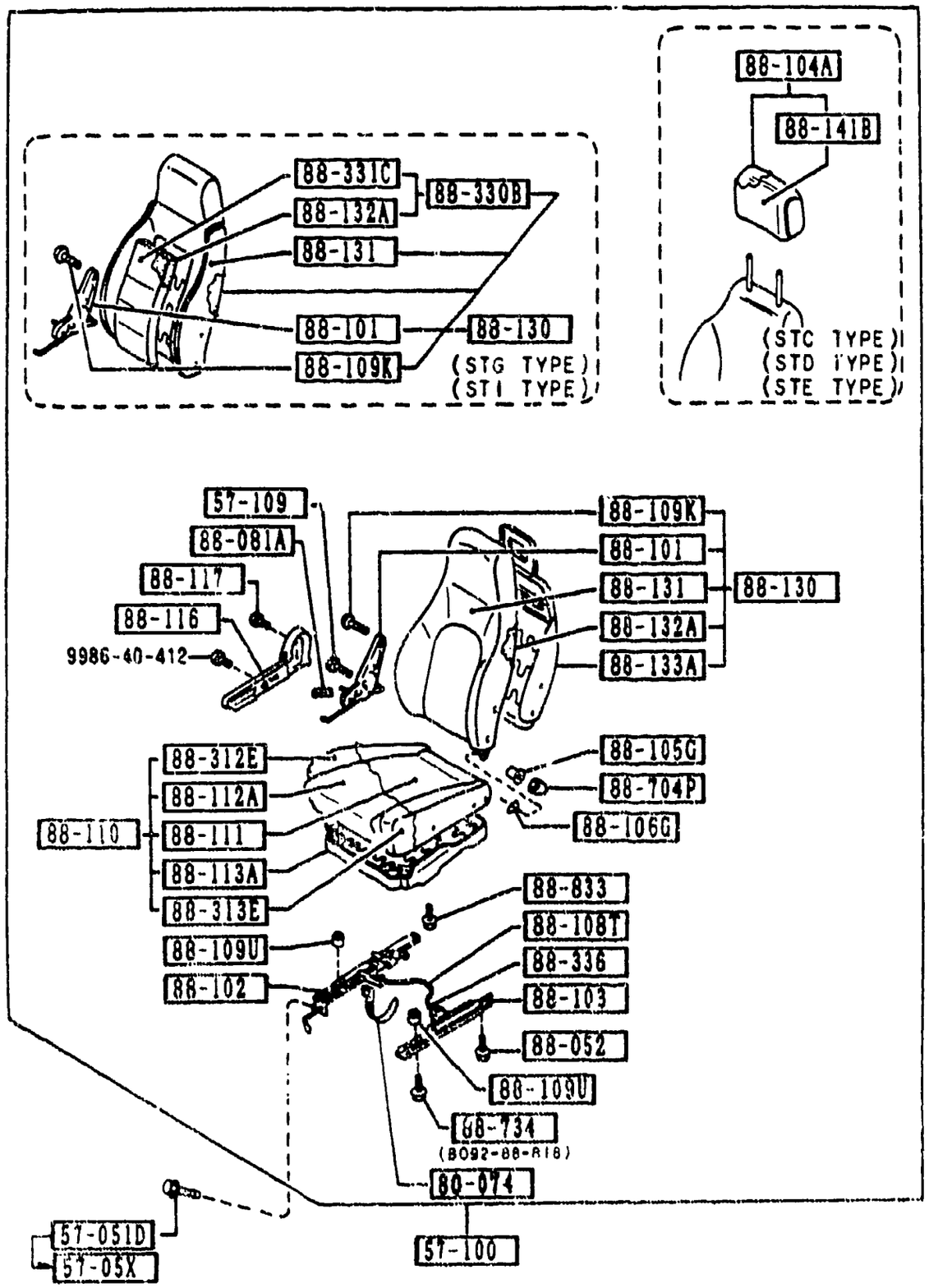






| PART NO. | QTY | MODEL/RESTRICTION | MODEL/RESTRICTION | MODEL/RESTRICTION | FROM-TO |
|---|---|---|---|---|---|
| CONT'D | | | | | |
| FC01-88-153 | 1 | GTU, GTUS, TURBO, TURBO-OPT, (STA TYPE) (STG TYPE) (STI TYPE) | | | |
| FC03-88-153 | 1 | GXL, 2-SEAT-GXL-OPT, (STC TYPE) (STD TYPE) (STE TYPE) | | | |
| 88-160 | | CUSHION(L),FRT SEAT | | | |
| FCX7-88-160A | 1 | GTUS, TURBO, (STG TYPE) | | | |
| 02 | | FD8 BLACK | | | |
| 48 | | FD9 BLUE | | | |
| FCY5-88-160 | 1 | TURBO-OPT, (STI TYPE) | | | |
| 02 | | FD8 BLACK | | | |
| 48 | | FD9 BLUE | | | |
| FC70-88-160 | 1 | 2-SEAT-GXL-OPT, (STE TYPE) | | | |
| 02 | | FD8 BLACK | | | |
| 48 | | FD9 BLUE | | | |
| FC11-88-160A (FC11-88-160A) | 1 | | | | -9701 |
| 02 | | FD8 BLACK | | | |
| 19 | | FE0 RED | | | |
| 48 | | FD9 BLUE | | | |
| FC13-88-160A (FC13-88-160A) | 1 | | | | -9701 |
| 02 | | FD8 BLACK | | | |
| 19 | | FE0 RED | | | |
| 48 | | FD9 BLUE | | | |
| FC11-88-160A | 1 | GTU, (STA TYPE) | | | 9701- |
| 02 | | FD8 BLACK | | | |
| 19 | | FE0 RED | | | |
| 48 | | FD9 BLUE | | | |
| FC13-88-160A | 1 | GXL, (STC TYPE) (STD TYPE) | | | 9701- |
| 02 | | FD8 BLACK | | | |

9701 FC3###-709151

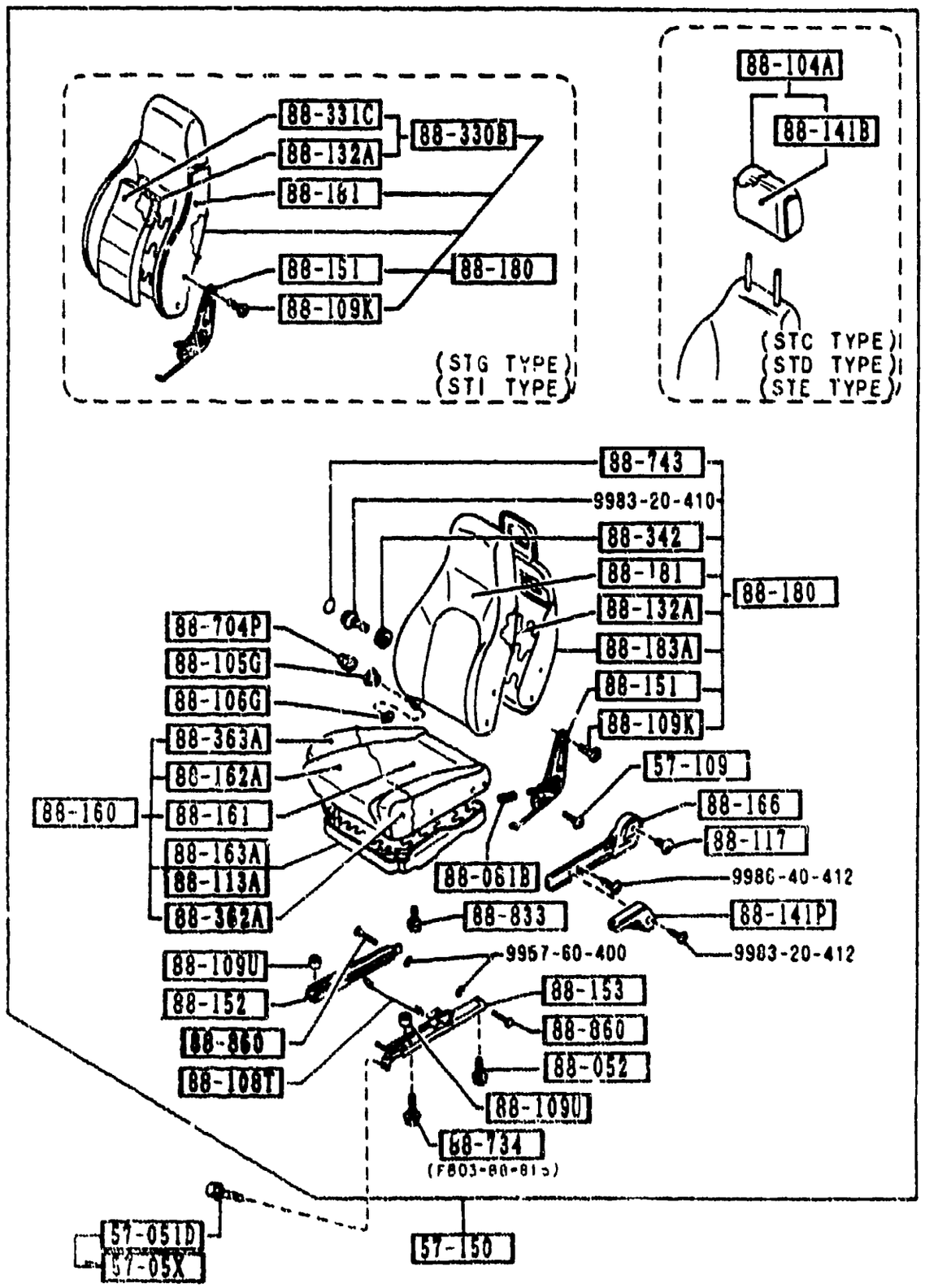






| PART NO. | QTY | MODEL/RESTRICTION | MODEL/RESTRICTION | MODEL/RESTRICTION | FROM-TO |
|---|---|---|---|---|---|
| CONT'D 19 | | FE0 RED | | | |
| 48 | | FD9 BLUE | | | |
| +88-161+ | | TRIM(L),SEAT CUSHION | | | |
| FB46-88-161 | 1 | TURBO-OPT, (STI TYPE) | | | |
| 02 | | FD8 BLACK | | | |
| 48 | | FD9 BLUE | | | |
| FC07-88-161 | 1 | GTUS, TURBO, (STG TYPE) | | | |
| 02 | | FD8 BLACK | | | |
| 48 | | FD9 BLUE | | | |
| FC70-88-161A | 1 | 2-SEAT-GXL-OPT, (STE TYPE) | | | |
| 02 | | FD8 BLACK | | | |
| 48 | | FD9 BLUE | | | |
| FC01-88-161A (FC01-88-161A) | 1 | | | | -9701 |
| 02 | | FD8 BLACK | | | |
| 19 | | FE0 RED | | | |
| 48 | | FD9 BLUE | | | |
| FC03-88-161A (FC03-88-161A) | 1 | | | | -9701 |
| 02 | | FD8 BLACK | | | |
| 19 | | FE0 RED | | | |
| 48 | | FD9 BLUE | | | |
| FC01-88-161A | 1 | GTU, (STA TYPE) | | | 9701- |
| 02 | | FD8 BLACK | | | |
| 19 | | FE0 RED | | | |
| 48 | | FD9 BLUE | | | |
| FC03-88-161A | 1 | GXL, (STC TYPE) (STD TYPE) | | | 9701- |
| 02 | | FD8 BLACK | | | |
| 19 | | FE0 RED | | | |
| 48 | | FD9 BLUE | | | |
| +88-162A+ | | PAD(L),CUSHION-FRT | | | |

9701 FC3MMM-709151

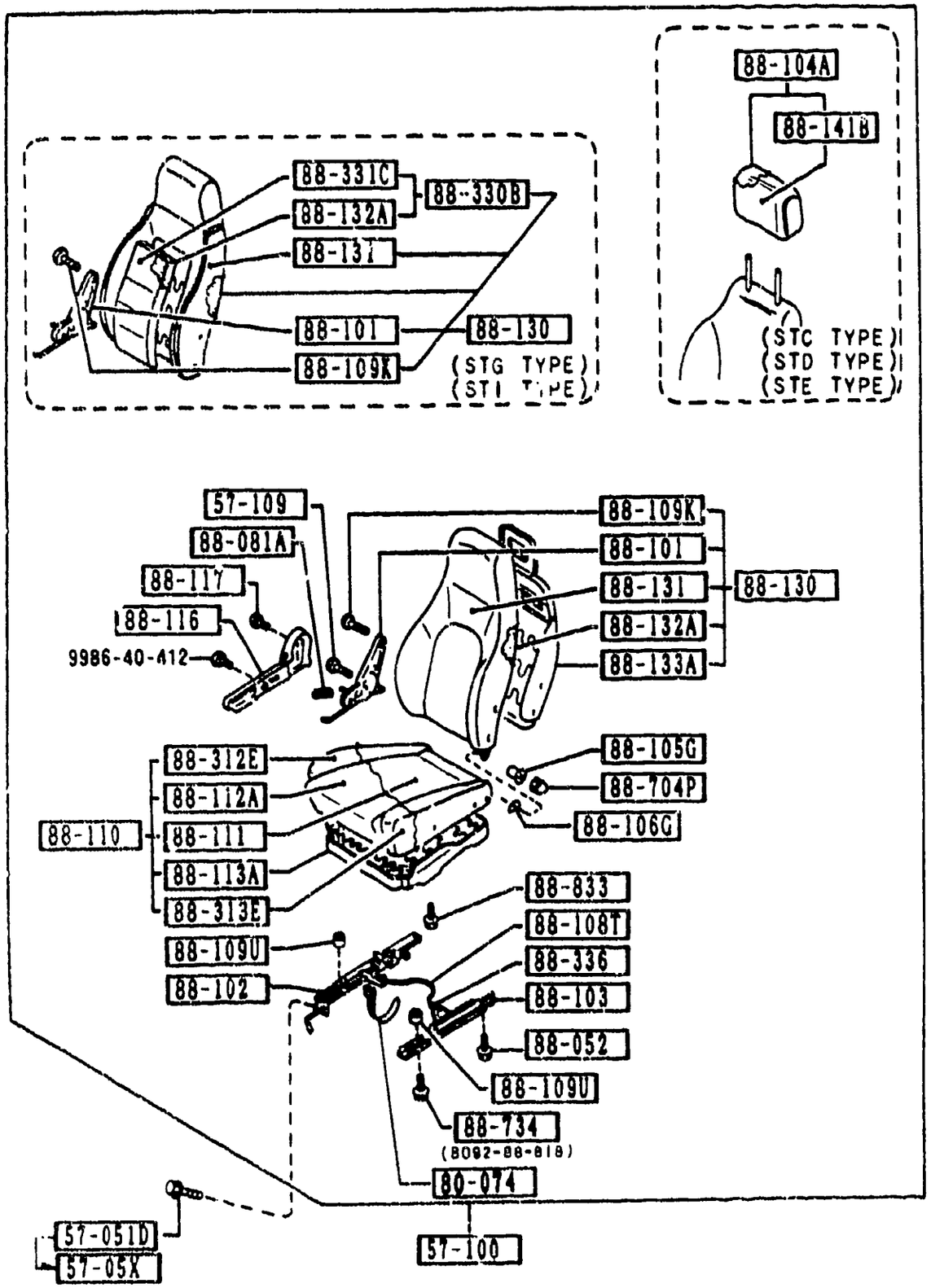




| PART NO. | QTY | MODEL/RESTRICTION | MODEL/RESTRICTION | MODEL/RESTRICTION | FROM-TO |
|---|---|---|---|---|---|
| CONT'D | | | | | |
| FB44-88-162 | 1 | TURBO-OPT,<br>(STI TYPE) | | | |
| FC01-88-162 | 1 | GTU,<br>(STA TYPE) | | | |
| FC03-88-162 | 1 | GXL, 2-SEAT-GXL-OPT,<br>(STC TYPE)<br>(STD TYPE)<br>(STE TYPE) | | | |
| 88-163A | | FRAME(L),CUSHION-FRT | | | |
| FC07-88-163 | 1 | GTUS, TURBO, TURBO-OPT,<br>(STG TYPE)<br>(STI TYPE) | | | |
| FC13-88-163A (FC13-88-163A) | 1 | | | | -9701 |
| FC13-88-163A | 1 | GXL, 2-SEAT-GXL-OPT,<br>(STC TYPE)<br>(STD TYPE)<br>(STE TYPE) | | | 9701- |
| 88-166 | | COVER(L),KNUCKLE | | | |
| FC11-88-177A | 1 | GTU, GTUS, TURBO, TURBO-OPT,<br>(STA TYPE)<br>(STG TYPE)<br>(STI TYPE) | | | |
| 02 | | FD8 FE1 BLACK | | | |
| 19 | | FE0 RED | | | |
| 48 | | FD9 BLUE | | | |
| FC13-88-177 | 1 | GXL, 2-SEAT-GXL-OPT,<br>(STC TYPE)<br>(STD TYPE)<br>(STE TYPE) | | | |
| 02 | | FD8 FE1 BLACK | | | |
| 19 | | FE0 RED | | | |
| 48 | | FD9 BLUE | | | |
| 88-180 | | BACK(L),FRONT SEAT | | | |
| FB46-88-180 | 1 | TURBO-OPT,<br>(STI TYPE) | | | |
| 02 | | FD8 BLACK | | | |
| 48 | | FD9 BLUE | | | |
| FC01-88-180 | 1 | GTU,<br>(STA TYPE) | | | |
| 02 | | FD8 BLACK | | | |

9701 FC3###-709151

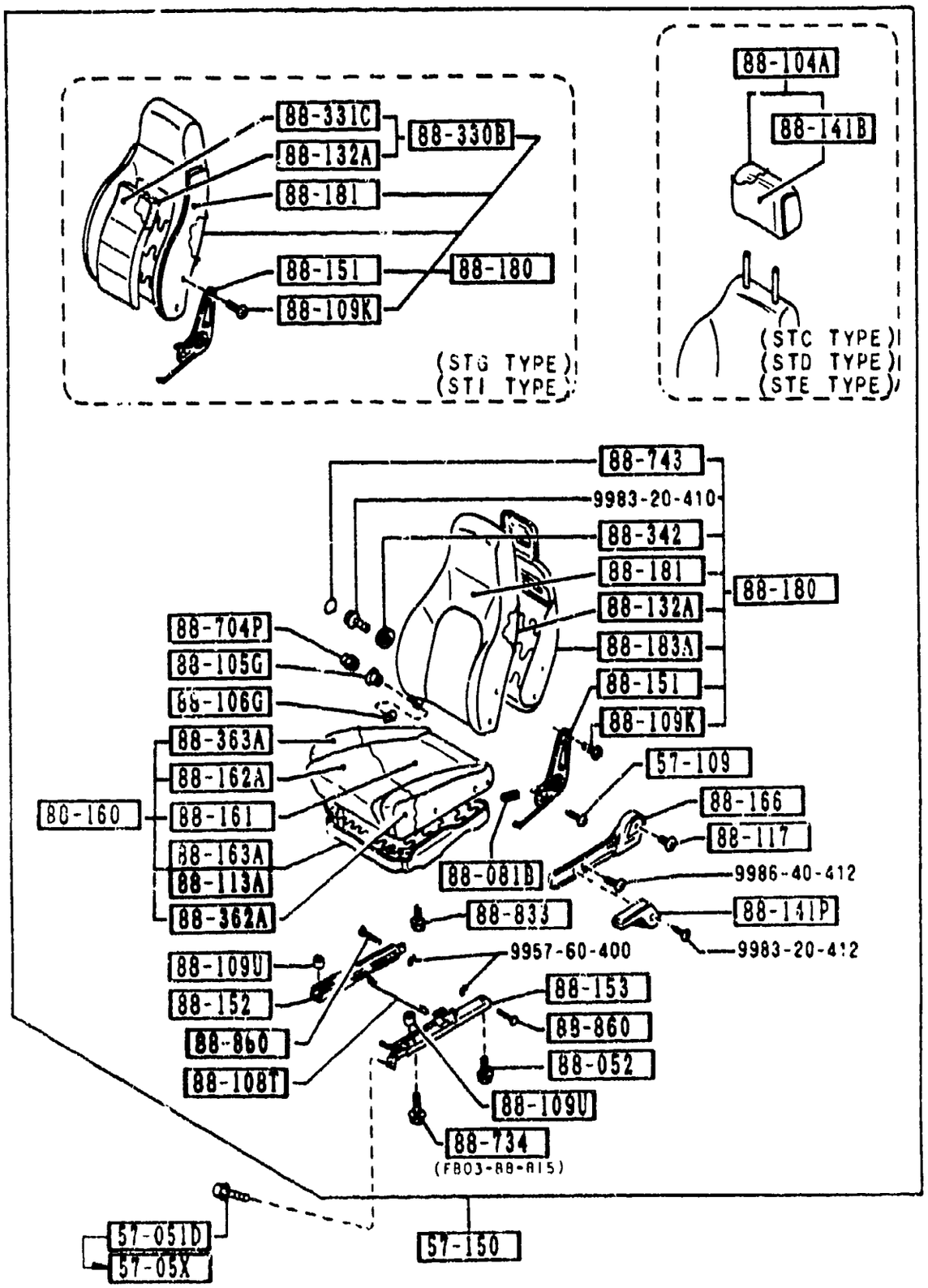




5700 -14 FRONT SEATS
(COUPE)

| PART NO. | QTY | MODEL/RESTRICTION | MODEL/RESTRICTION | MODEL/RESTRICTION | FROM-TO |
|---|---|---|---|---|---|
| CONT'D | | | | | |
| 19 | | FE0 RED | | | |
| 48 | | FD9 BLUE | | | |
| FC03-88-180 | 1 | GXL,<br>(STC TYPE)<br>(STD TYPE) | | | |
| 02 | | FD8 BLACK | | | |
| 19 | | FE0 RED | | | |
| 48 | | FD9 BLUE | | | |
| FC07-88-180 | 1 | GTUS, TURBO,<br>(STG TYPE) | | | |
| 02 | | FD8 BLACK | | | |
| 48 | | FD9 BLUE | | | |
| FC70-88-180 | 1 | 2-SEAT-GXL-OPT,<br>(STE TYPE) | | | |
| 02 | | FD8 BLACK | | | |
| 48 | | FD9 BLUE | | | |
| +88-181+ | | TRIM(L),SEAT BACK | | | |
| FB46-88-181 | 1 | TURBO-OPT,<br>(STI TYPE) | | | |
| 02 | | FD8 BLACK | | | |
| 48 | | FD9 BLUE | | | |
| FC01-88-181 | 1 | GTU,<br>(STA TYPE) | | | |
| 02 | | FD8 BLACK | | | |
| 19 | | FE0 RED | | | |
| 48 | | FD9 BLUE | | | |
| FC03-88-181 | 1 | GXL,<br>(STC TYPE)<br>(STD TYPE) | | | |
| 02 | | FD8 BLACK | | | |
| 19 | | FE0 RED | | | |
| 48 | | FD9 BLUE | | | |
| FC07-88-181 | 1 | GTUS, TURBO,<br>(STG TYPE) | | | |
| 02 | | FD8 BLACK | | | |
| 48 | | FD9 BLUE | | | |
| FC70-88-181 | 1 | 2-SEAT-GXL-OPT,<br>(STE TYPE) | | | |
| 02 | | FD8 BLACK | | | |

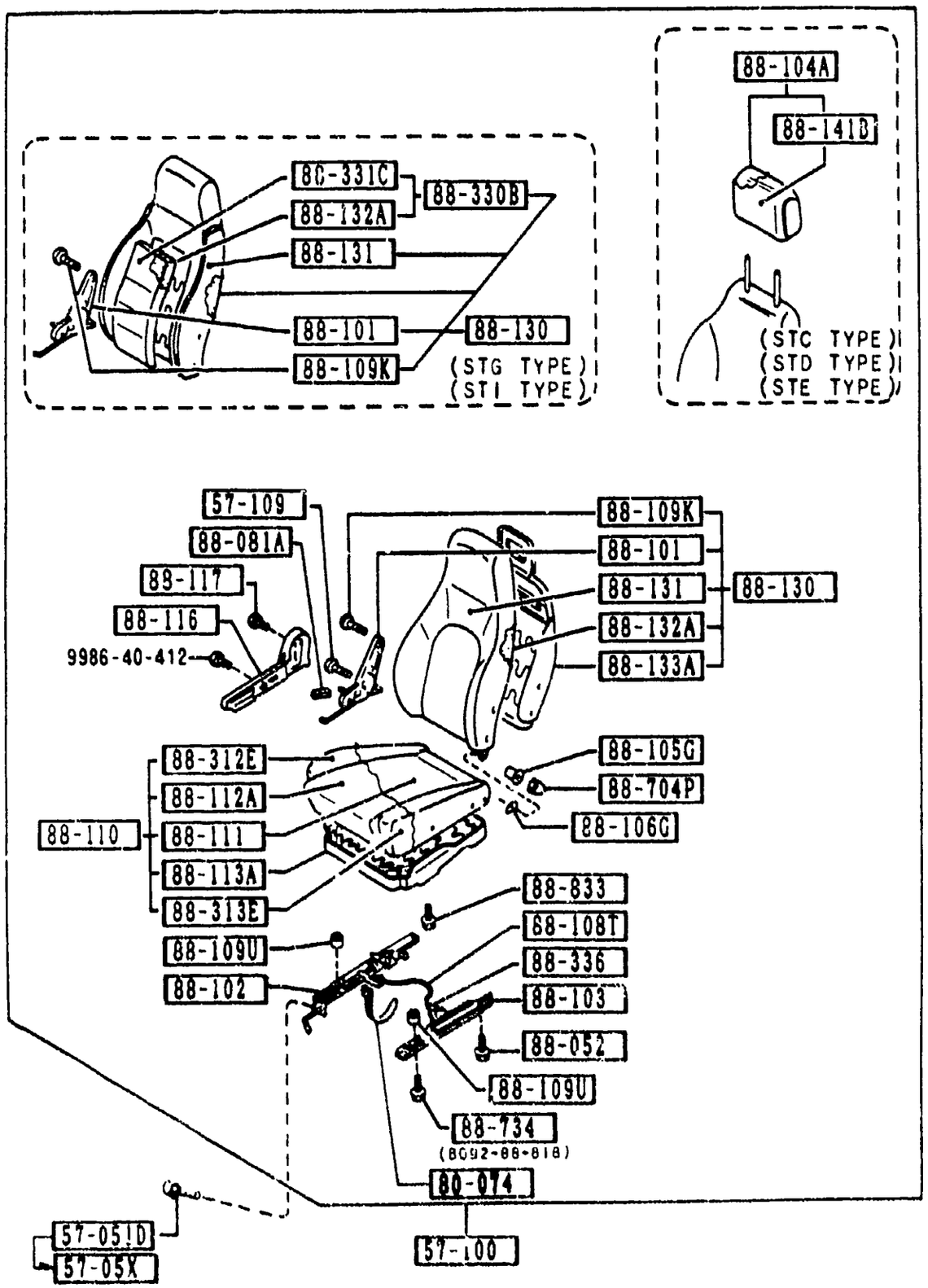






| PART NO. | QTY | MODEL/RESTRICTION | MODEL/RESTRICTION | MODEL/RESTRICTION | FROM-TO |
|---|---|---|---|---|---|
| CONT'D | | | | | |
| 48 | | FD9 BLUE | | | |
| 88-183A | | FRAME(L),BACK-FRT | | | |
| FC01-88-183 | 1 | GTU,<br>(STA TYPE) | | | |
| FC03-88-183 | 1 | 2-SEAT-GXL-OPT, GXL,<br>(STE TYPE)<br>(STC TYPE)<br>(STD TYPE) | | | |
| 88-312E | | PAD,SIDE-FRT CUSHION | | | |
| FC01-88-312 | 1 | GTU,<br>(STA TYPE) | | | |
| 88-313E | | PAD,SIDE-FRT CUSHION | | | |
| FC01-88-313<br>A (FC01-88-313A) | 1 | | | | -9701 |
| FC01-88-313A | 1 | GTU,<br>(STA TYPE) | | | 9701- |
| 88-330B | | BACK(C),FRT SEAT | | | |
| FB46-88-330 | 2 | TURBO-OPT,<br>(STI TYPE) | | | |
| 02 | | FD8 BLACK | | | |
| 48 | | FD9 BLUE | | | |
| FC07-88-330 | 2 | GTUS, TURBO,<br>(STG TYPE) | | | |
| 02 | | FD8 BLACK | | | |
| 48 | | FD9 BLUE | | | |
| 88-331C | | TRIM(C),FRT BACK | | | |
| FC07-88-331 | 2 | GTUS, TURBO,<br>(STG TYPE) | | | |
| 02 | | FD8 BLACK | | | |
| 48 | | FD9 BLUE | | | |
| 88-336 | | RING,STOPPER | | | |
| FA58-88-336 | 1 | | | | |
| 88-342 | | DIAL,LUMBER SUPPORT | | | |
| FB03-88-385 | 1 | 2-SEAT-GXL-OPT, GXL,<br>(STE TYPE)<br>(STD TYPE)<br>(STC TYPE) | | | |

9701 FC3####-709151

| LO.NO | SEC.NO | SECTION NAME |
|---|---|---|
| 3-C03 | 0900 | KEY SETS |
| 3-F03 | 5000 | FRONT BUMPER |
| 3-H03 | 5010 | REAR BUMPER |
| 3-J03 | 5020 | HEAD LAMP CLEANER |
| 3-L03 | 5030 | WINDOW MOULDINGS |
| 3-M03 | 5040 | BODY MOULDINGS (COUPE) |
| 3-E04 | 5060 | SIDE PROTECTORS |
| 3-I04 | 5100 | HEAD LAMPS |
| 3-J04 | 5103 | HEAD LAMP RETRACTORS |
| 3-N04 | 5105 | FRONT COMBINATION LAMPS |
| 3-G05 | 5110 | REAR COMBINATION LAMPS |
| 3-K05 | 5120 | LICENSE LAMPS |
| 3-M05 | 5125 | INTERIOR LAMPS |
| 3-N05 | 5130 | OVERHEAD CONSOLE |
| 3-C06 | 5170 | ORNAMENTS |
| 3-D06 | 5180 | COWL & EXTRACTOR GRILLES |
| 3-G06 | 5230 | BONNET |
| 3-J06 | 5260 | TRUNK LID (CONVERTIBLE) |
| 3-L06 | 5310 | BODY PANELS (FRONT) (COUPE) |
| 3-C07 | 5310 A | BODY PANELS (FRONT) (CONVERTIBLE) |
| 3-F07 | 5320 | BODY PANELS (FENDER & WHEEL APRON) |
| 3-K07 | 5330 | BODY PANELS (DASH & COWL PANEL) |
| 3-L07 | 5340 | BODY PANELS (SIDE) (COUPE) |
| 3-E08 | 5340A | BODY PANELS (SIDE) (CONVERTIBLE) |
| 3-K08 | 5360 | BODY PANELS (ROOF) (W/O SUN ROOF) |
| 3-L08 | 5360 A | BODY PANELS (ROOF) (SUN ROOF) |
| 3-M08 | 5370 | BODY PANELS (FLOOR) (COUPE) |
| 3-D09 | 5370 A | BODY PANELS (FLOOR) (CONVERTIBLE) |
| 3-H09 | 5380 | FLOOR ATTACHMENTS (HOLE COVERS) |
| 3-J09 | 5390 | FLOOR ATTACHMENTS |
| 3-C10 | 5500 | DASHBOARD EQUIPMENTS |
| 3-F10 | 5520 | METER HOOD |
| 3-G10 | 5530 | SPEEDOMETER CABLE |
| 3-H10 | 5540 | METER COMPONENTS |
| 3-J10 | 5560 | DASHBOARD & RELATED PARTS |
| 3-E11 | 5570 | CONSOLE |
| 3-H11 | 5580 | VENTILATOR |
| 3-J11 | 5700 | FRONT SEATS (COUPE) |
| 3-E13 | 5700A | FRONT SEATS (CONVERTIBLE) |
| 3-K13 | 5750 | REAR SEATS (COUPE) |
| 3-M13 | 5790 | SEAT BELTS (COUPE) |
| 3-C14 | 5790A | SEAT BELTS (CONVERTIBLE) |
| 3-D14 | 5800 | FRONT DOORS (COUPE) |
| 3-G14 | 5800A | FRONT DOORS (CONVERTIBLE) |
| 3-K14 | 5830 | FRONT DOOR MECHANISMS (COUPE) |
| 3-F15 | 5830A | FRONT DOOR MECHANISMS (CONVERTIBLE) |
| 3-J15 | 5840 | FRONT DOOR TRIMS & RELATED PARTS (COUPE) |
| 3-H16 | 5840A | FRONT DOOR TRIMS & RELATED PARTS (CONVERTIBLE) |

| LO.NO | SEC.NO | SECTION NAME |
|---|---|---|

CATLOG-NO* AUFA02-06

DATE. 1992-05

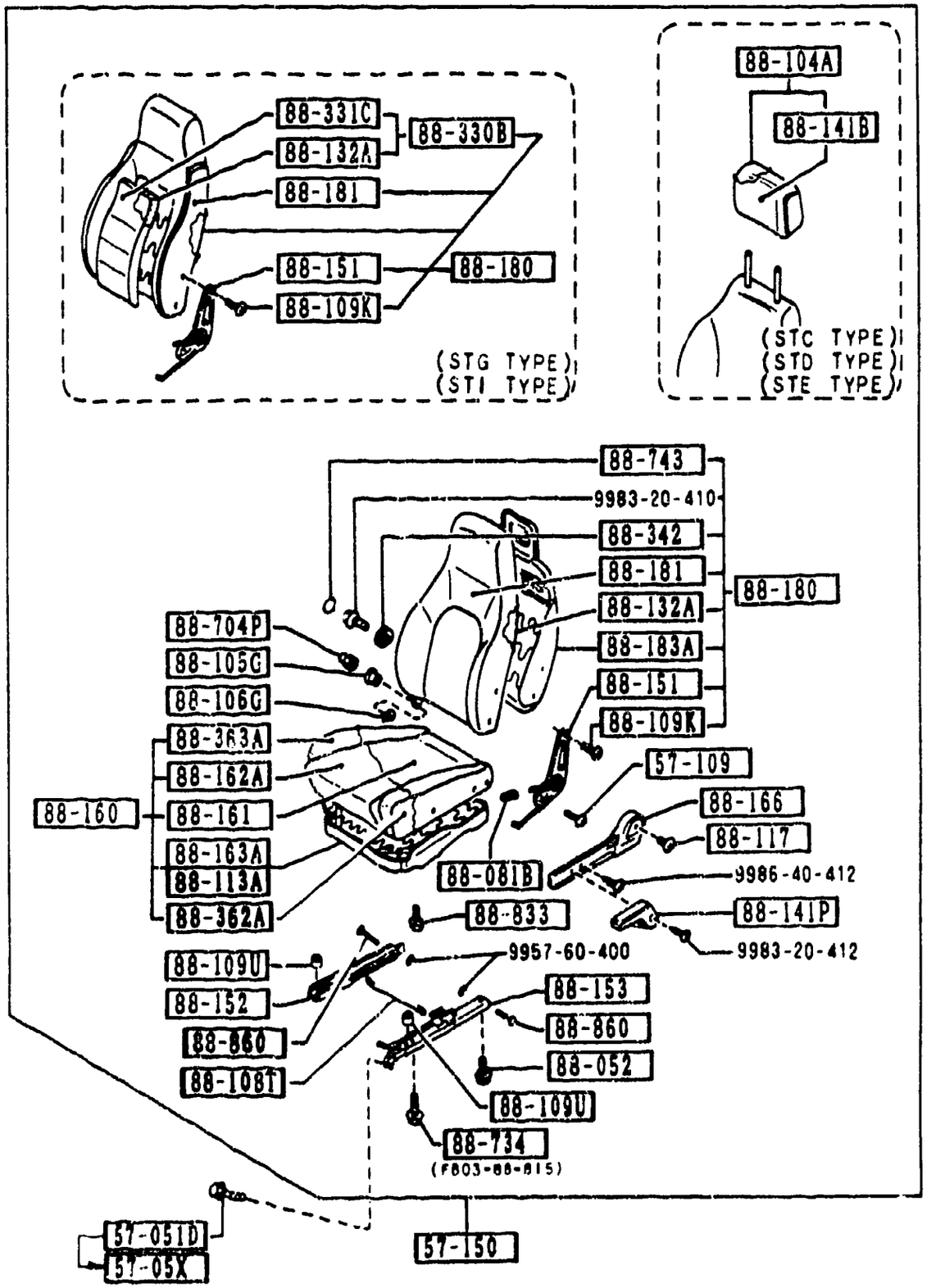






| PART NO. | QTY | MODEL/RESTRICTION | MODEL/RESTRICTION | MODEL/RESTRICTION | FROM-TO |
|---|---|---|---|---|---|
| CONT'D | | | | | |
| 02 | | FD8 BLACK | | | |
| 19 | | FE0 RED | | | |
| 48 | | FD9 BLUE | | | |
| +----------+ \| 88-362A \| +----------+ | | PAD,SIDE-FRT CUSHION | | | |
| FC01 88-362 | 1 | GTU, (STA TYPE) | | | |
| FC03-88-362 A (FC03-88-362A) | 1 | | | | -9701 |
| FC03-88-362A | 1 | GXL, 2-SEAT-GXL-OPT, (STC TYPE) (STD TYPE) (STE TYPE) | | | 9701- |
| +----------+ \| 88-363A \| +----------+ | | PAD,SIDE-FRT CUSHION | | | |
| FC01-88-363 A (FC01-88-363A) | 1 | | | | -9701 |
| FC03-88-363 A (FC03-88-363A) | 1 | | | | -9701 |
| FC01-88-363A | 1 | GTU, (STA TYPE) | | | 9701- |
| FC03-88-363A | 1 | GXL, 2-SEAT-GXL-OPT, (STC TYPE) (STD TYPE) (STE TYPE) | | | 9701- |
| +----------+ \| 88-704P \| +----------+ | | NUT | | | |
| B092-88-519 | 2 | | | | |
| +----------+ \| 88-734 \| +----------+ | | BOLT | | | |
| FB03-88-815 | 2 | GXL, 2-SEAT-GXL-OPT, (FOR LEFT) (STC TYPE) (STD TYPE) (STE TYPE) | | | |
| B092-88-818 | 2 | 2-SEAT-GXL-OPT, GXL, (FOR RIGHT) (STE TYPE) (STC TYPE) (STD TYPE) | | | |
| | 4 | GTU, (FOR RIGHT & LEFT) (STA TYPE) | | | |
| +----------+ \| 88-743 \| +----------+ | | COVER,DIAL | | | |
| FB03-88-386 | 1 | GXL, 2-SEAT-GXL-OPT, (STC TYPE) (STD TYPE) | | | |

9701 FC3####-709151

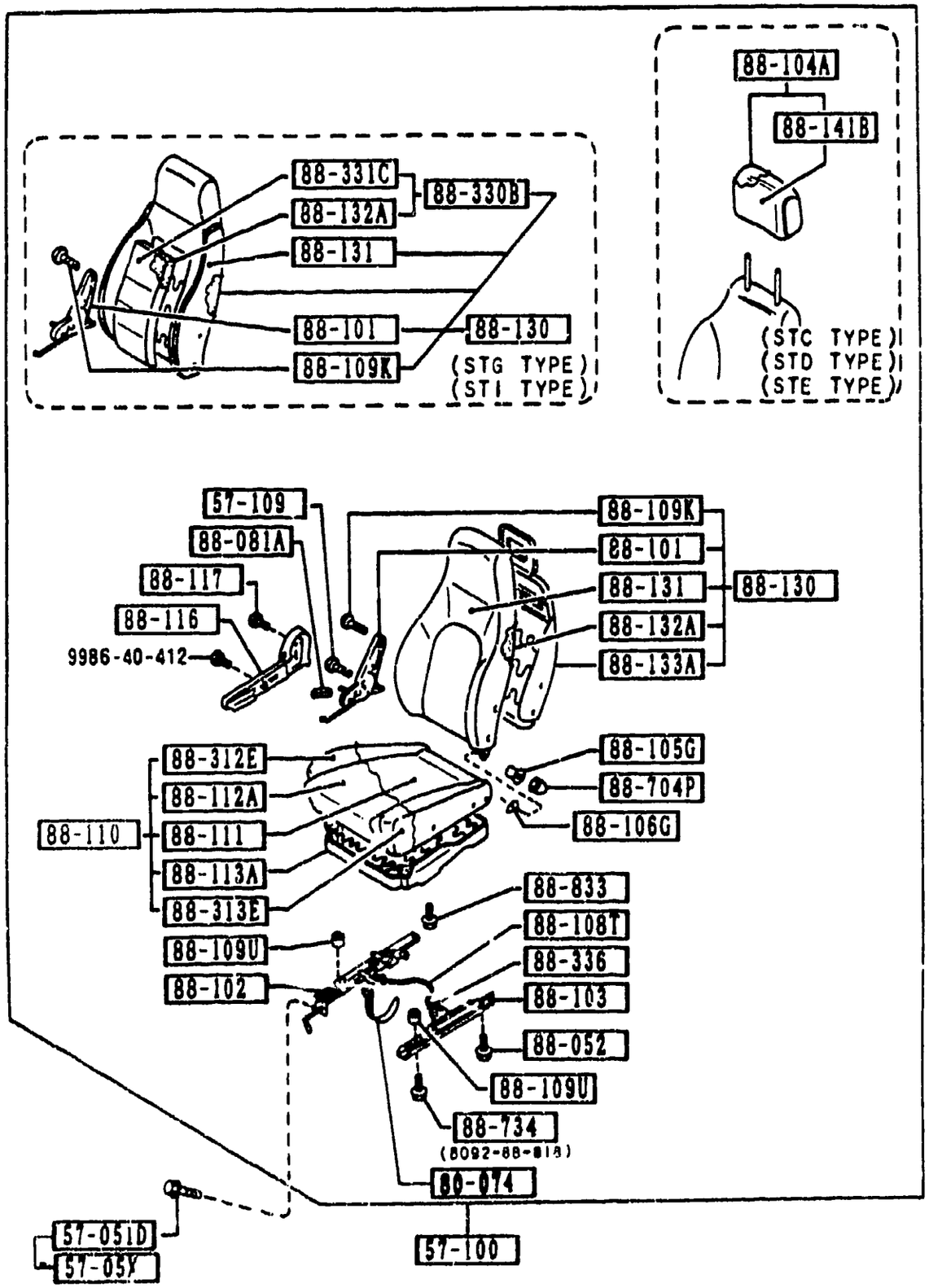


5700 -17* FRONT SEATS
(COUPE)

| PART NO. | QTY | MODEL/RESTRICTION | MODEL/RESTRICTION | MODEL/RESTRICTION | FROM-TO |
|---|---|---|---|---|---|
| CONT'D | | (STE TYPE) | | | |
| 02 | | FD8 BLACK | | | |
| 48 | | FD9 BLUE | | | |
| 88-833 | | BOLT,ADJUSTER-FRT SEAT | | | |
| F044-88-833 | 4 | GTUS, TURBO, TURBO-OPT, (STG TYPE) (STI TYPE) | | | |
| 88-860 | | PIN,JOINT | | | |
| BA49-88-860 | 2 | GXL, 2-SEAT-GXL-OPT, (STC TYPE) (STD TYPE) (STE TYPE) | | | |

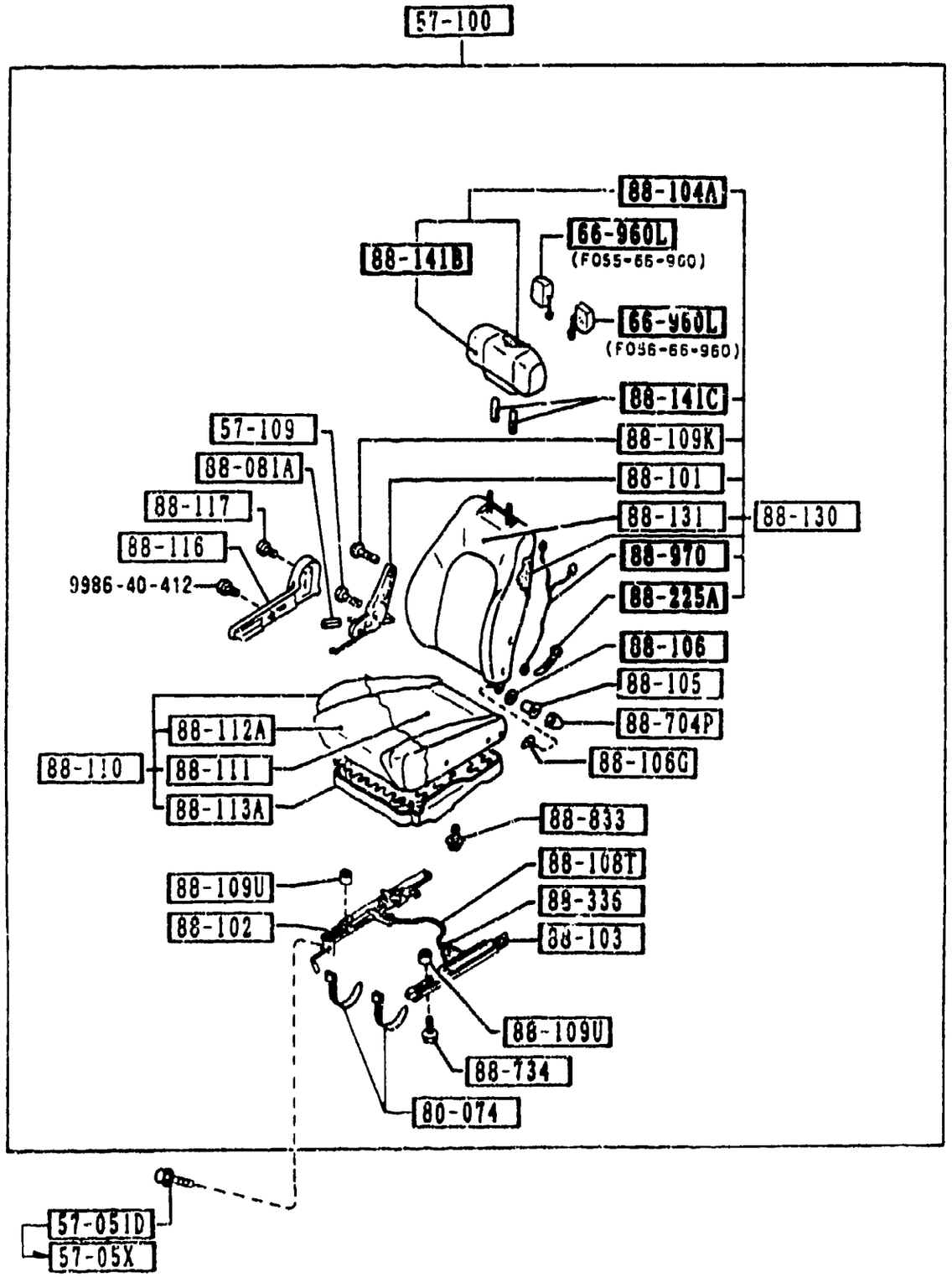


AUFA02 (CONT'D)



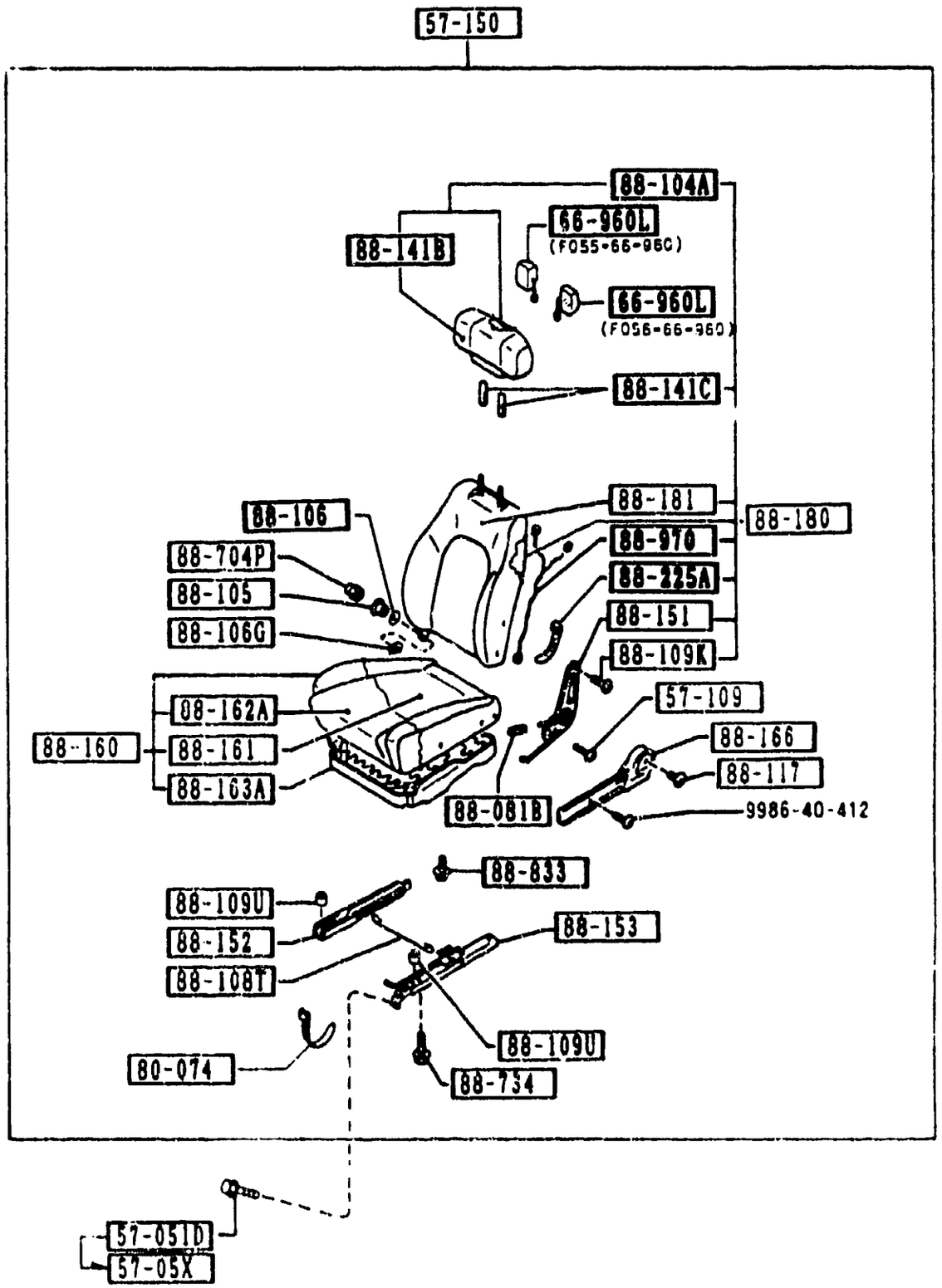


AUFA02

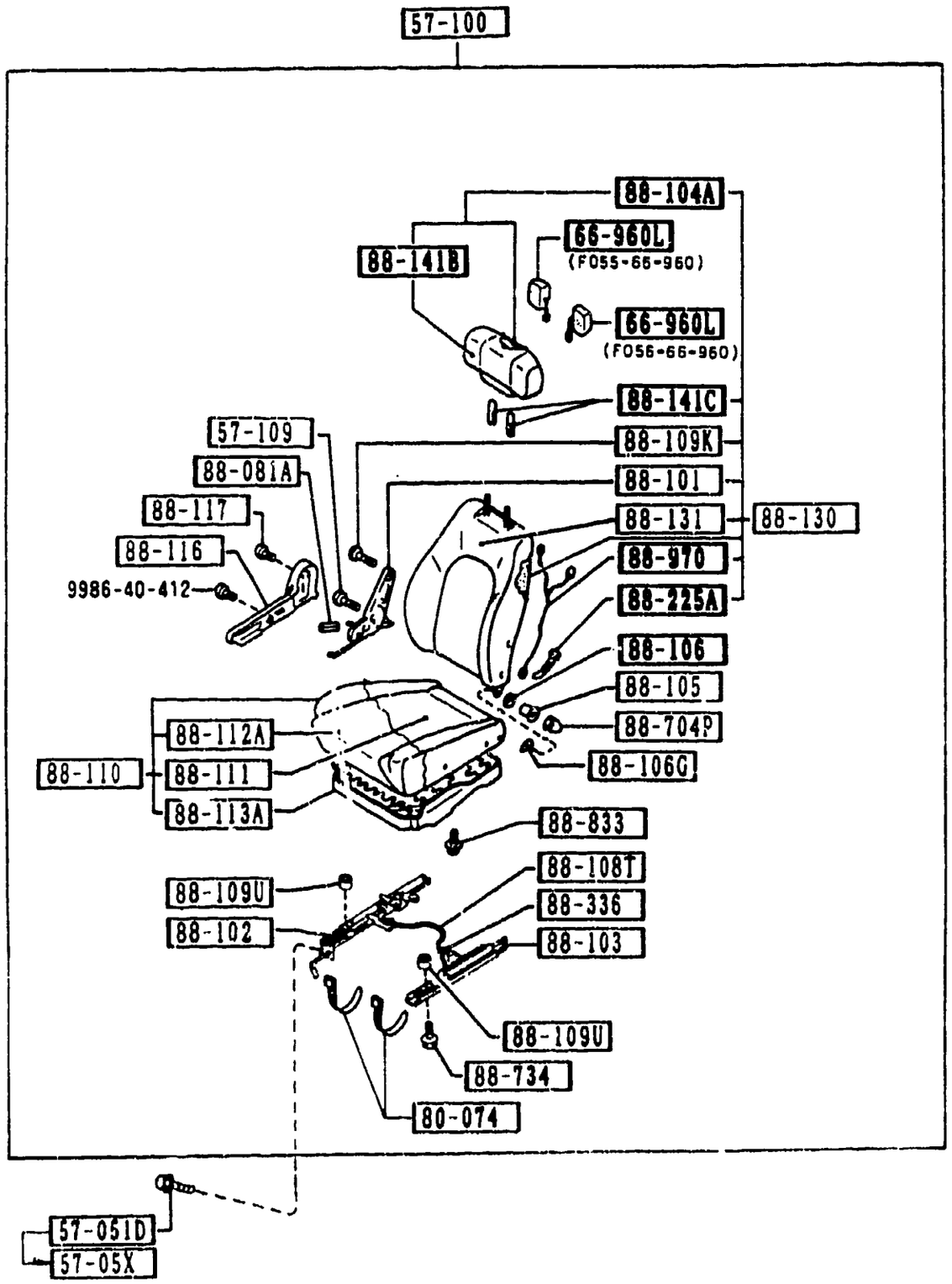






| PART NO. | QTY | MODEL/RESTRICTION | MODEL/RESTRICTION | MODEL/RESTRICTION | FROM-TO |
|---|---|---|---|---|---|
| 57-05X | | BOLT,LINK | | | |
| B455-57-05X | 8 | | | | 9324- |
| 57-051D | | BOLT,SET | | | |
| UB40-57-05X | 8 | | | | -9324 |
| 57-100 | | SEAT(R),FRONT | | | |
| FCY3-57-100 | 1 | | | | |
| 02 | | FD8 BLACK | | | |
| 48 | | FD9 BLUE | | | |
| 57-109 | | SCREW,KNUCKLE | | | |
| 0259-57-109 | 4 | | | | |
| 57-150 | | SEAT(L),FRONT | | | |
| FCY3-57-150 | 1 | | | | |
| 02 | | FD8 BLACK | | | |
| 48 | | FD9 BLUE | | | |
| 66-960L | | SPEAKER(L),W/BOX & AMP | | | |
| F055-66-960 | 2 | | | | |
| F056-66-960 | 2 | | | | |
| 80-074 | | BAND | | | |
| *3966-88-116 | 5 | | | | |
| 88-081A | | KNOB(R),KNUCKLE | | | |
| B001-88-081 | 1 | | | | |
| 02 | | FD8 BLACK | | | |
| 48 | | FD9 BLUE | | | |
| 88-081B | | KNOB(L),KNUCKLE | | | |
| B001-88-091 | 1 | | | | |
| 02 | | FD8 BLACK | | | |
| 48 | | FD9 BLUE | | | |
| 88-101 | | KNUCKLE(R),RECLINING | | | |
| FB01-88-101 | 1 | | | | |

9324 FC3####-705162

(THIS ILLUSTRATION CONSISTS OF 2 PAGES)

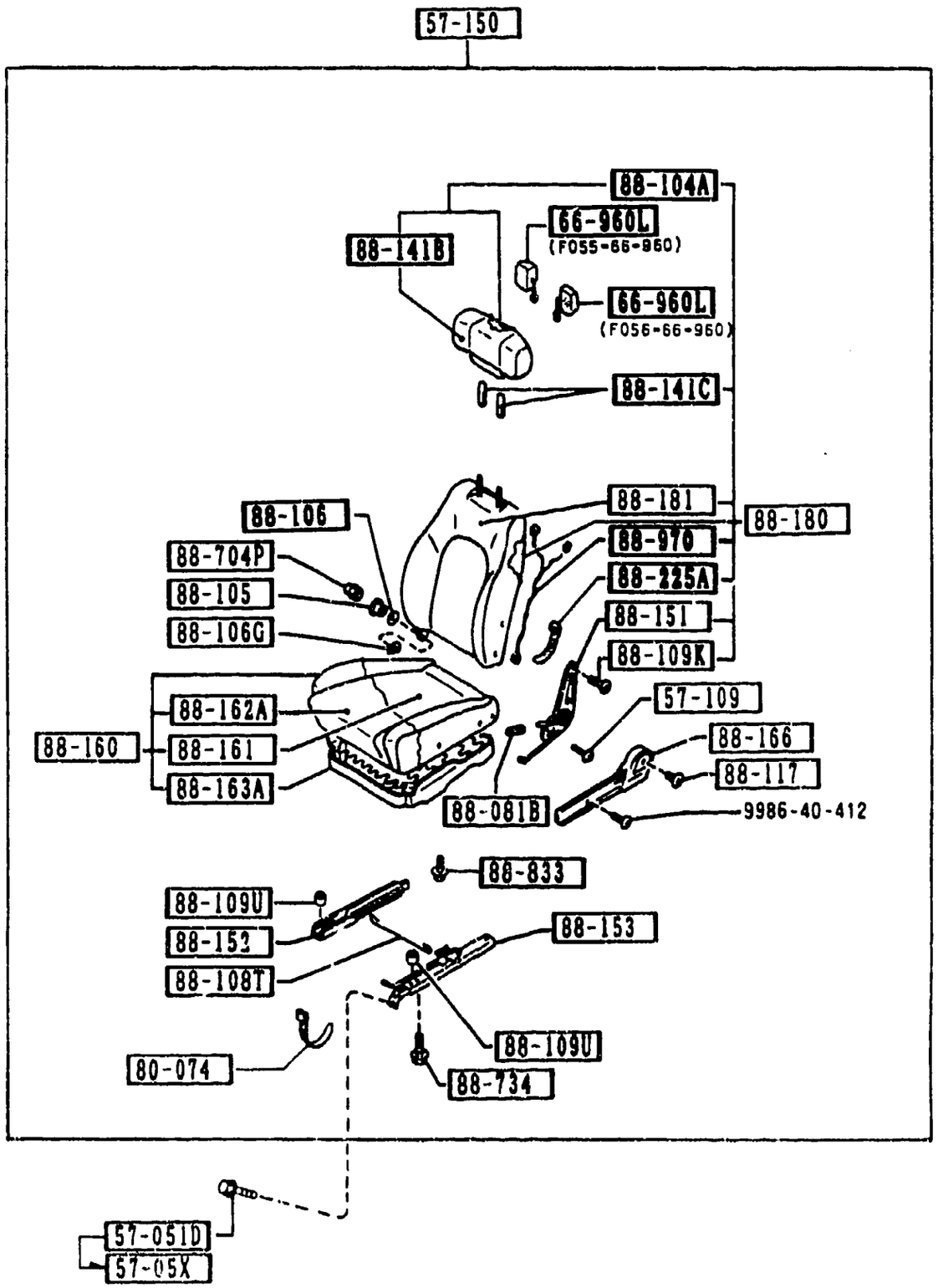




| PART NO. | QTY | MODEL/RESTRICTION | MODEL/RESTRICTION | MODEL/RESTRICTION | FROM-TO |
|---|---|---|---|---|---|
| 88-102 | | ADJUSTER,NO.1 | | | |
| FC34-88-102A | 1 | | | | |
| 88-103 | | ADJUSTER,NO.2 | | | |
| FC34-88-103 | 1 | | | | |
| 88-104A | | RESTRAINT,HEAD | | | |
| FB69-88-140 | 2 | | | | |
| 02 | | FD8 BLACK | | | |
| 48 | | FD9 BLUE | | | |
| 88-105 | | BUSH | | | |
| FB67-88-105 | 2 | | | | |
| 88-106 | | WASHER | | | |
| FB67-88-107 | 2 | | | | |
| 88-106G | | WASHER,HINGE | | | |
| FB01-88-105 | 2 | | | | |
| 88-108T | | WIRE,RELEASE | | | |
| F062-88-106 | 1 | (FOR RIGHT) | | | |
| H115-88-108 | 1 | (FOR LEFT) | | | |
| 88-109K | | SCREW,KNUCKLE | | | |
| B095-88-109 | 4 | | | | |
| 88-109U | | SPACER | | | |
| FB44-88-109 | 4 | | | | |
| 88-110 | | CUSHION(R),FRT SEAT | | | |
| FC72-88-110 | 1 | | | | -9117 |
| 02 | | FD8 BLACK | | | |
| 48 | | FD9 BLUE | | | |
| FB69-88-110 | 1 | | | | 9117- |
| 02 | | FD8 BLACK | | | |
| 48 | | FD9 BLUE | | | |
| 88-111 | | TRIM(R),SEAT CUSHION | | | |

9117 FC3####-700199

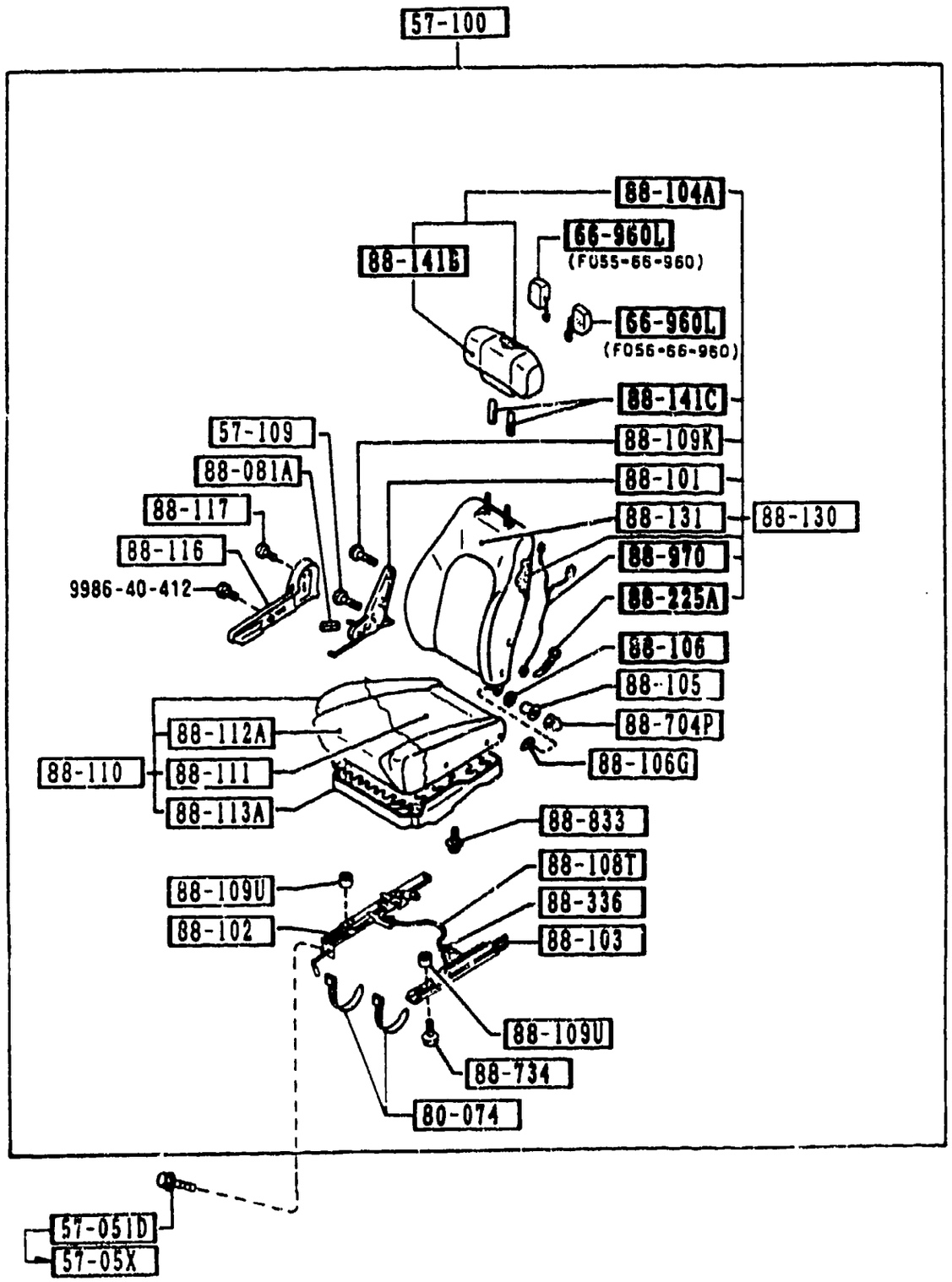






| PART NO. | QTY | MODEL/RESTRICTION | MODEL/RESTRICTION | MODEL/RESTRICTION | FROM-TO |
|---|---|---|---|---|---|
| CONT'D | | | | | |
| FB69-88-111 | 1 | | | | |
| 02 | | FD8 BLACK | | | |
| 48 | | FD9 BLUE | | | |
| 88-112A | | PAD(R),CUSHION-FRT | | | |
| FB44-88-112 | 1 | | | | |
| 88-113A | | FRAME(R),CUSHION-FRT | | | |
| FB68-88-113 | 1 | | | | |
| 88-116 | | COVER(R),KNUCKLE | | | |
| F044-88-127A | 1 | | | | |
| 02 | | FD8 BLACK | | | |
| 48 | | FD9 BLUE | | | |
| 88-117 | | SCREW,KNUCKLE | | | |
| 1243-88-117 | 2 | | | | |
| 88-130 | | BACK(R),FRONT SEAT | | | |
| FC72-88-130 | 1 | | | | |
| 02 | | FD8 BLACK | | | |
| 48 | | FD9 BLUE | | | |
| 88-131 | | TRIM(R),SEAT BACK | | | |
| FC72-88-131 | 1 | | | | |
| 02 | | FD8 BLACK | | | |
| 48 | | FD9 BLUE | | | |
| 88-141B | | TRIM,HEAD REST-FRT | | | |
| FB69-88-141 | 2 | | | | |
| 02 | | FD8 BLACK | | | |
| 48 | | FD9 BLUE | | | |
| 88-141C | | GUIDE,POLE-NO.1 | | | |
| FB68-88-335 | 4 | | | | |
| 88-151 | | KNUCKLE(L),RECLINING | | | |
| FB01-88-151 | 1 | | | | |



3-H13

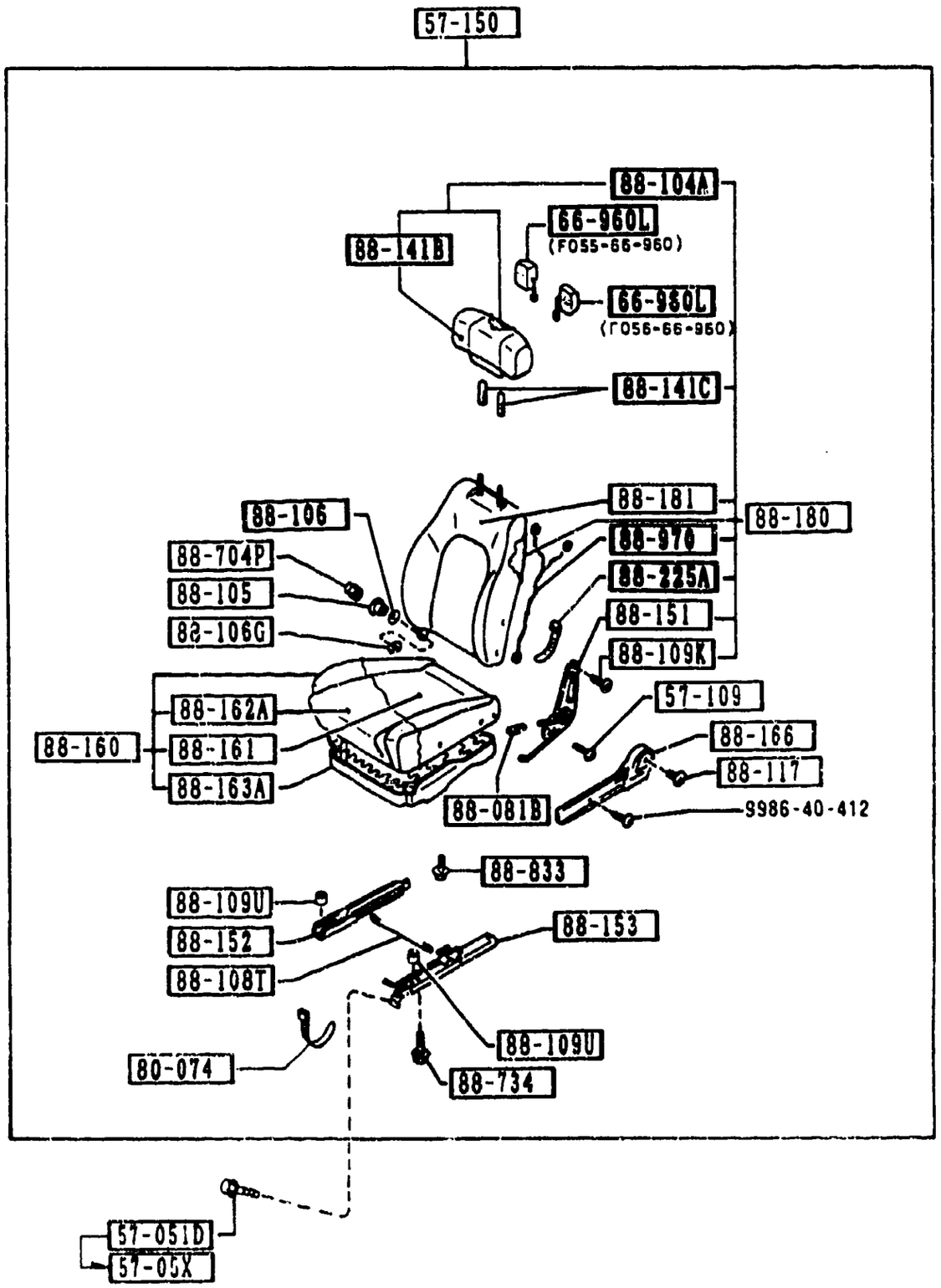




| PART NO. | QTY | MODEL/RESTRICTION | MODEL/RESTRICTION | MODEL/RESTRICTION | FROM-TO |
|---|---|---|---|---|---|
| 88-152 | | ADJUSTER NO.3 | | | |
| FC01-88-152 | 1 | | | | |
| 88-153 | | ADJUSTER NO.4 | | | |
| FC34-88-153 | 1 | | | | |
| 88-160 | | CUSHION(L),FRT SEAT | | | |
| FC72-88-160 | 1 | | | | |
| 02 | | FD8 BLACK | | | |
| 48 | | FD9 BLUE | | | |
| 88-161 | | TRIM(L),SEAT CUSHION | | | |
| FB69-88-161 | 1 | | | | |
| 02 | | FD8 BLACK | | | |
| 48 | | FD9 BLUE | | | |
| 88-162A | | PAD(L),CUSHION-FRT | | | |
| FB44-88-162 | 1 | | | | |
| 88-163A | | FRAME(L),CUSHION-FRT | | | |
| FC34-88-163 | 1 | | | | |
| 88-166 | | COVER(L),KNUCKLE | | | |
| F044-88-177A | 1 | | | | |
| 02 | | FD8 FE1 BLACK | | | |
| 48 | | FD9 BLUE | | | |
| 88-180 | | BACK(L),FRONT SEAT | | | |
| FB69-88-180 | 1 | | | | |
| 02 | | FD8 BLACK | | | |
| 48 | | FD9 BLUE | | | |
| 88-181 | | TRIM(L),SEAT BACK | | | |
| FB69-88-181 | 1 | | | | |
| 02 | | FD8 BLACK | | | |
| 48 | | FD9 BLUE | | | |
| 88-225A | | BAND | | | |
| FB68-88-115 | 2 | | | | |

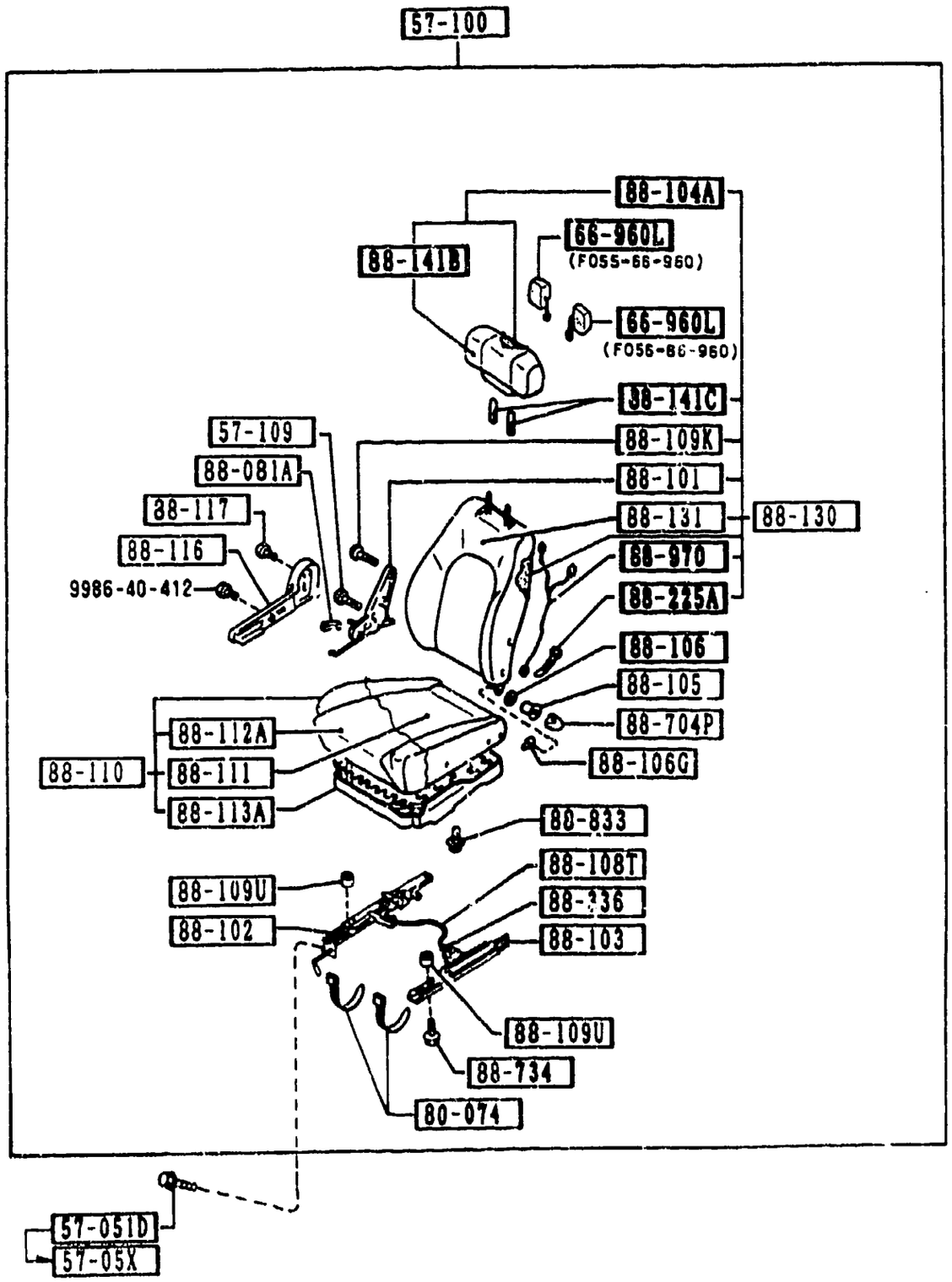


5700A -5 ✱ FRONT SEATS (CONVERTIBLE)

| PART NO. | QTY | MODEL/RESTRICTION | MODEL/RESTRICTION | MODEL/RESTRICTION | FROM-TO |
|---|---|---|---|---|---|
| 88-336 | | RING,STOPPER | | | |
| FA58-88-336 | 1 | | | | |
| 88-704P | | NUT | | | |
| B092-88-519 | 2 | | | | |
| 88-734 | | BOLT | | | |
| B092-88-818 | 4 | | | | |
| 88-833 | | BOLT,ADJUSTER-FRT SEAT | | | |
| F044-88-833 | 4 | | | | |
| 88-970 | | CORD,SHORT-FRT SEAT BACK | | | |
| FB68-88-970 | 2 | | | | |

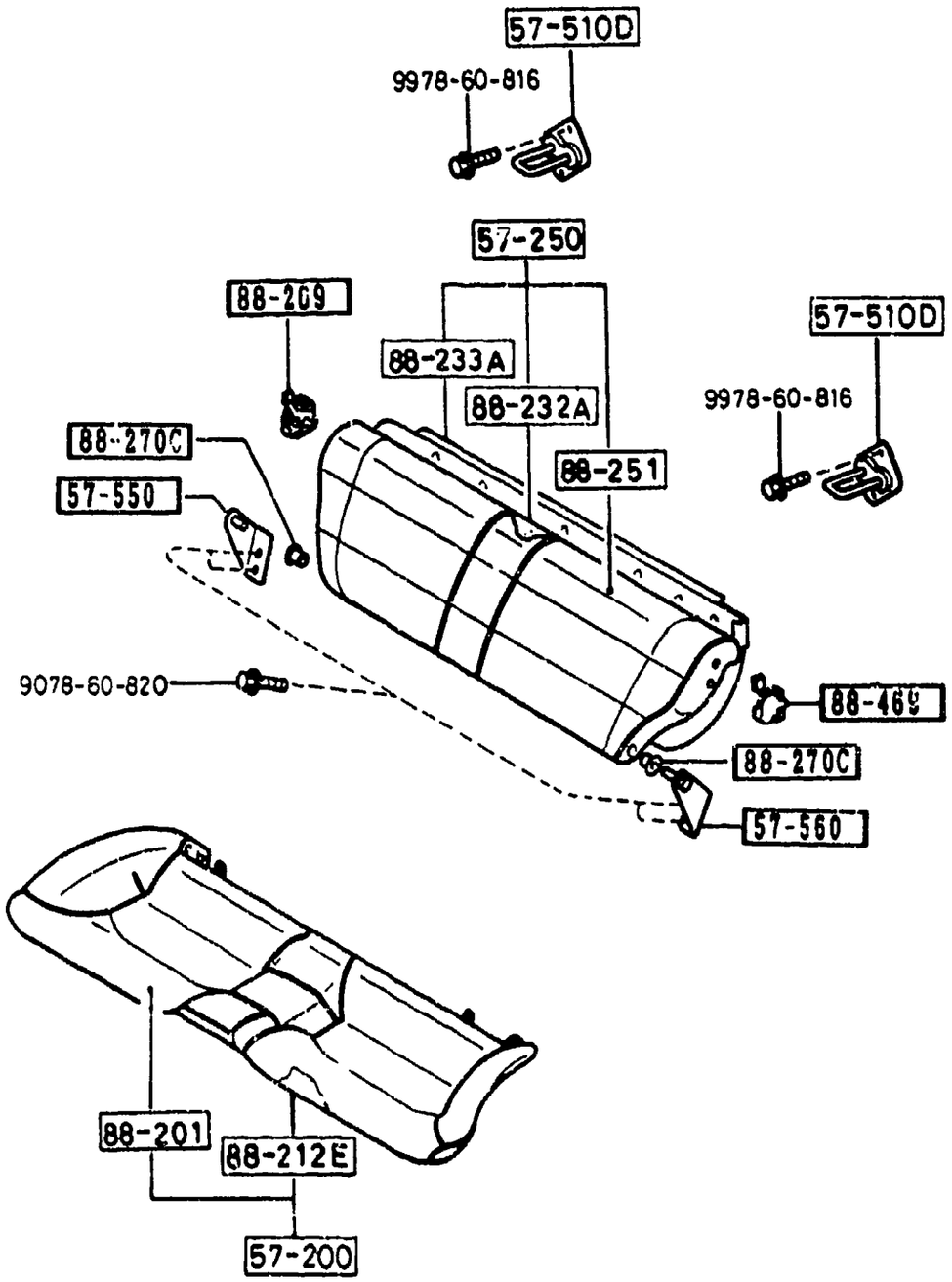




| PART NO. | QTY | MODEL/RESTRICTION | MODEL/RESTRICTION | MODEL/RESTRICTION | FROM-TO |
|---|---|---|---|---|---|
| 57-200 | | CUSHION,REAR SEAT | | | |
| FC04-57-200 | 1 | | | | |
| 02 | | FD8 BLACK | | | |
| 19 | | FE0 RED | | | |
| 48 | | FD9 BLUE | | | |
| 57-250 | | BACK,REAR SEAT | | | |
| FC04-57-350 | 1 | | | | |
| 02 | | FD8 BLACK | | | |
| 19 | | FE0 RED | | | |
| 48 | | FD9 BLUE | | | |
| 57-510D | | STRIKER,RR. SEAT CUSHION | | | |
| FB10-57-510 | 2 | | | | |
| 57-550 | | HINGE(R),REAR BACK | | | |
| FB10-57-550 | 1 | | | | |
| 57-560 | | HINGE(L),REAR BACK | | | |
| FB10-57-560 | 1 | | | | |
| 88-201 | | TRIM,RR SEAT CUSHION | | | |
| FC04-88-201 | 1 | | | | |
| 02 | | FD8 BLACK | | | |
| 19 | | FE0 RED | | | |
| 48 | | FD9 BLUE | | | |
| 88-212E | | PAD,RR SEAT CUSHION | | | |
| FC04-88-202 | 1 | | | | |
| 88-232A | | PAD,RR SEAT BACK | | | |
| FB10-88-252 | 1 | | | | |
| 88-233A | | FRAME,RR SEAT BACK | | | |
| FB10-88-253 | 1 | | | | |
| 88-251 | | TRIM,REAR SEAT BACK | | | |
| FC04-88-351 | 1 | | | | |
| 02 | | FD8 BLACK | | | |

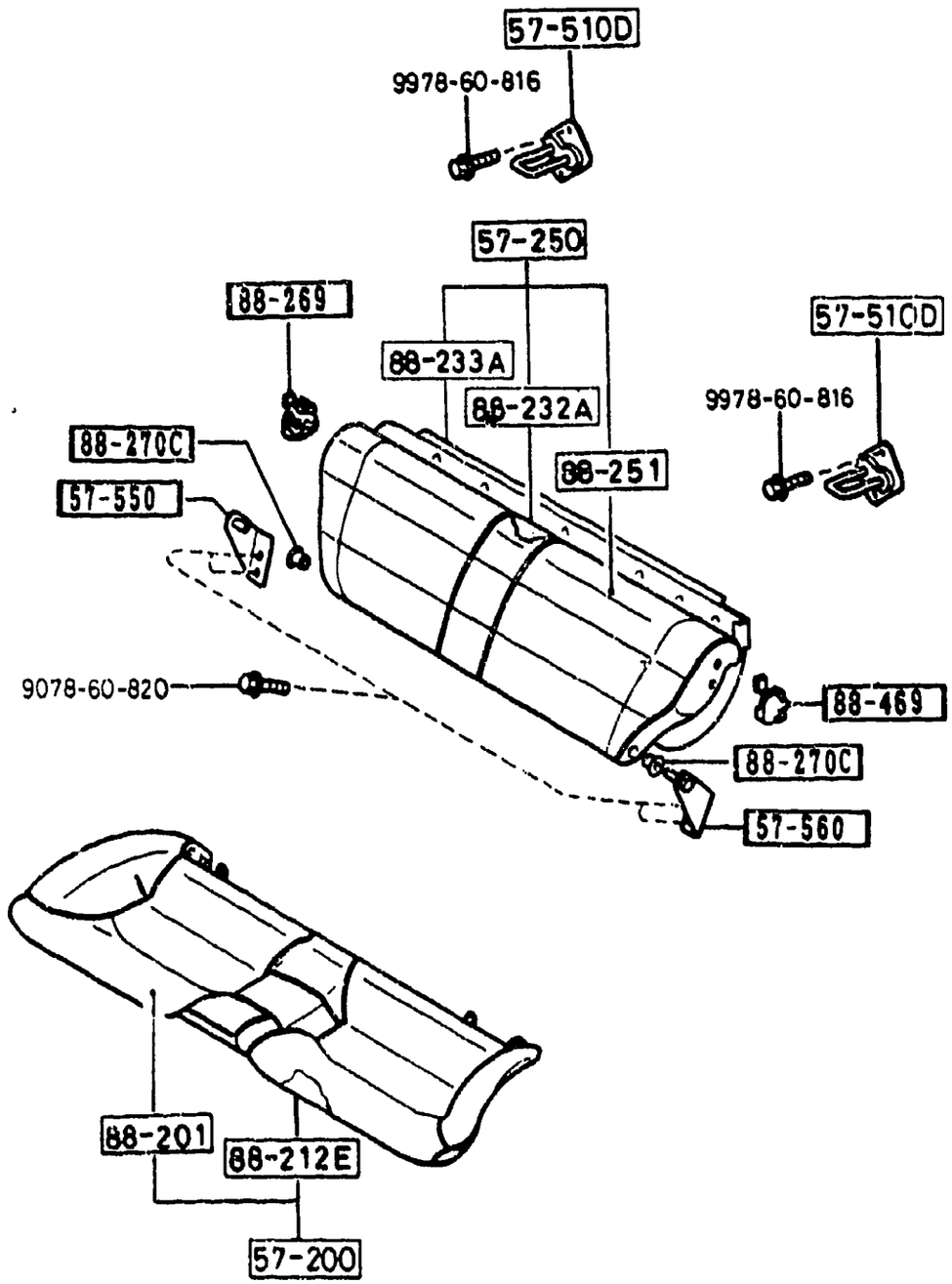




| PART NO. | QTY | MODEL/RESTRICTION | MODEL/RESTRICTION | MODEL/RESTRICTION | FROM-TO |
|---|---|---|---|---|---|
| CONT'D | | | | | |
| 19 | | FE0 RED | | | |
| 48 | | FD9 BLUE | | | |
| 88-269 | | CATCH(R),RR.SEAT BAC | | | |
| FB10-88-269 | 1 | | | | |
| 88-270C | | BUSH,HINGE | | | |
| B093-88-270 | 2 | | | | |
| 88-469 | | CATCH(L),RR.SEAT BAC | | | |
| FB10-88-469 | 1 | | | | |

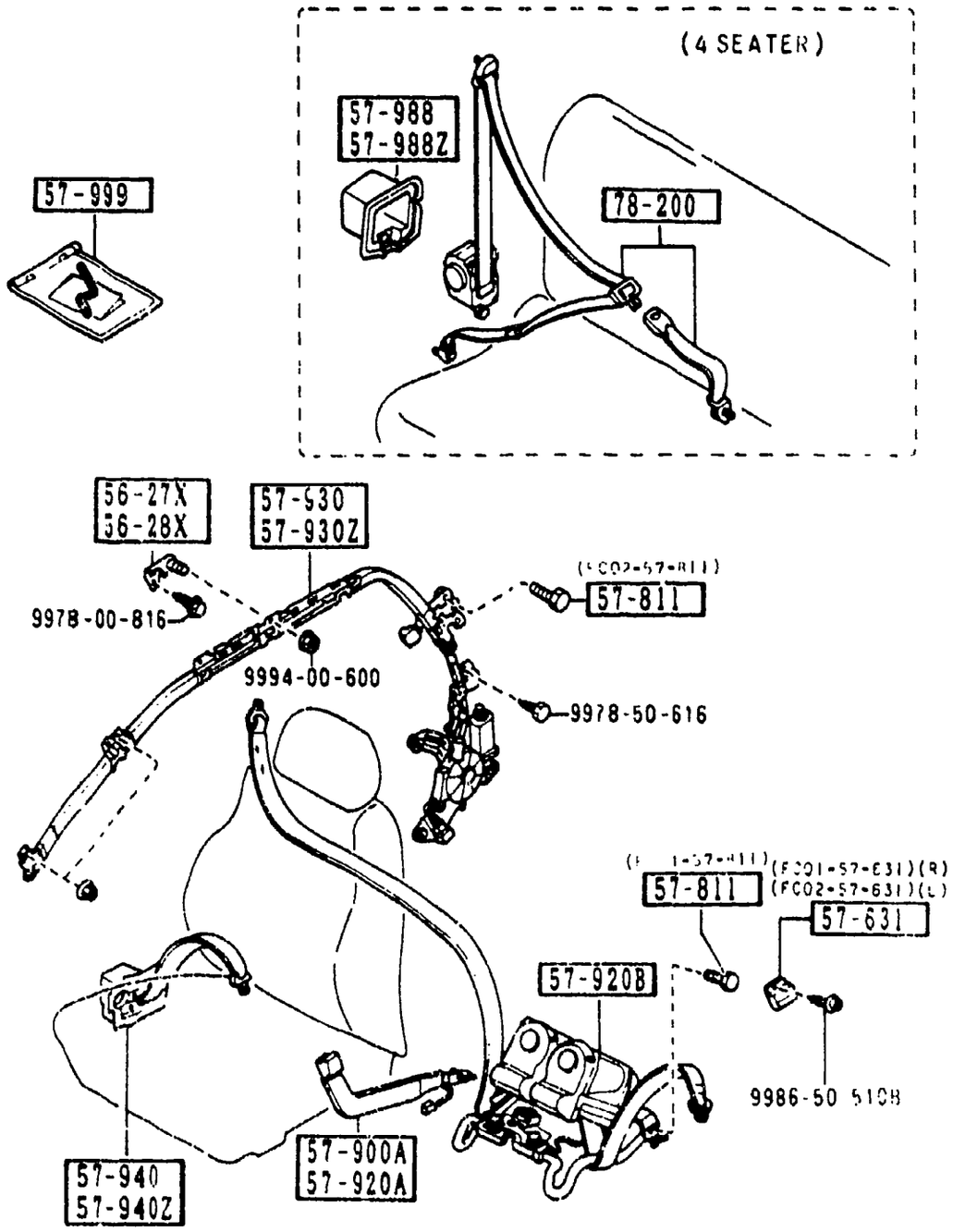




| PART NO. | QTY | MODEL/RESTRICTION | MODEL/RESTRICTION | MODEL/RESTRICTION | FROM-TO |
|---|---|---|---|---|---|
| 56-27X | | BRACKET(R),SEAT BELT | | | |
| FC01-56-27X | 1 | | | | |
| 56-28X | | BRACKET(L),SEAT BELT | | | |
| FC01-56-28X | 1 | | | | |
| 57-631 | | COVER,ANCHOR | | | |
| FC01-57-631 | 1 | (FOR RIGHT) | | | |
| 02 | | FD8 FE1 BLACK | | | |
| 19 | | FE0 RED | | | |
| 48 | | FD9 BLUE | | | |
| FC02-57-631 | 1 | (FOR LEFT) | | | |
| 02 | | FD8 FE1 BLACK | | | |
| 19 | | FE0 RED | | | |
| 48 | | FD9 BLUE | | | |
| 57-811 | | BOLT,SEAT BELT | | | |
| FC01-57-811 | 2 | | | | |
| FC02-57-811 | 2 | | | | |
| 57-900A | | BELT'A'(R),FRT SEAT | | | |
| FC01-57-620A | 1 | | | | |
| 02 | | FD8 FE1 BLACK | | | |
| 19 | | FE0 RED | | | |
| 48 | | FD9 BLUE | | | |
| 57-920A | | BELT'A'(L),FRT SEAT | | | |
| FC01-57-680A | 1 | | | | |
| 02 | | FD8 FE1 BLACK | | | |
| 19 | | FE0 RED | | | |
| 48 | | FD9 BLUE | | | |
| 57-920B | | BELT,AUTO SHOULDER-RETRAC | | | |
| FC01-57-920B | 1 | | | | |
| 02 | | FD8 BLACK | | | |
| 19 | | FE0 RED | | | |
| 48 | | FD9 BLUE | | | |

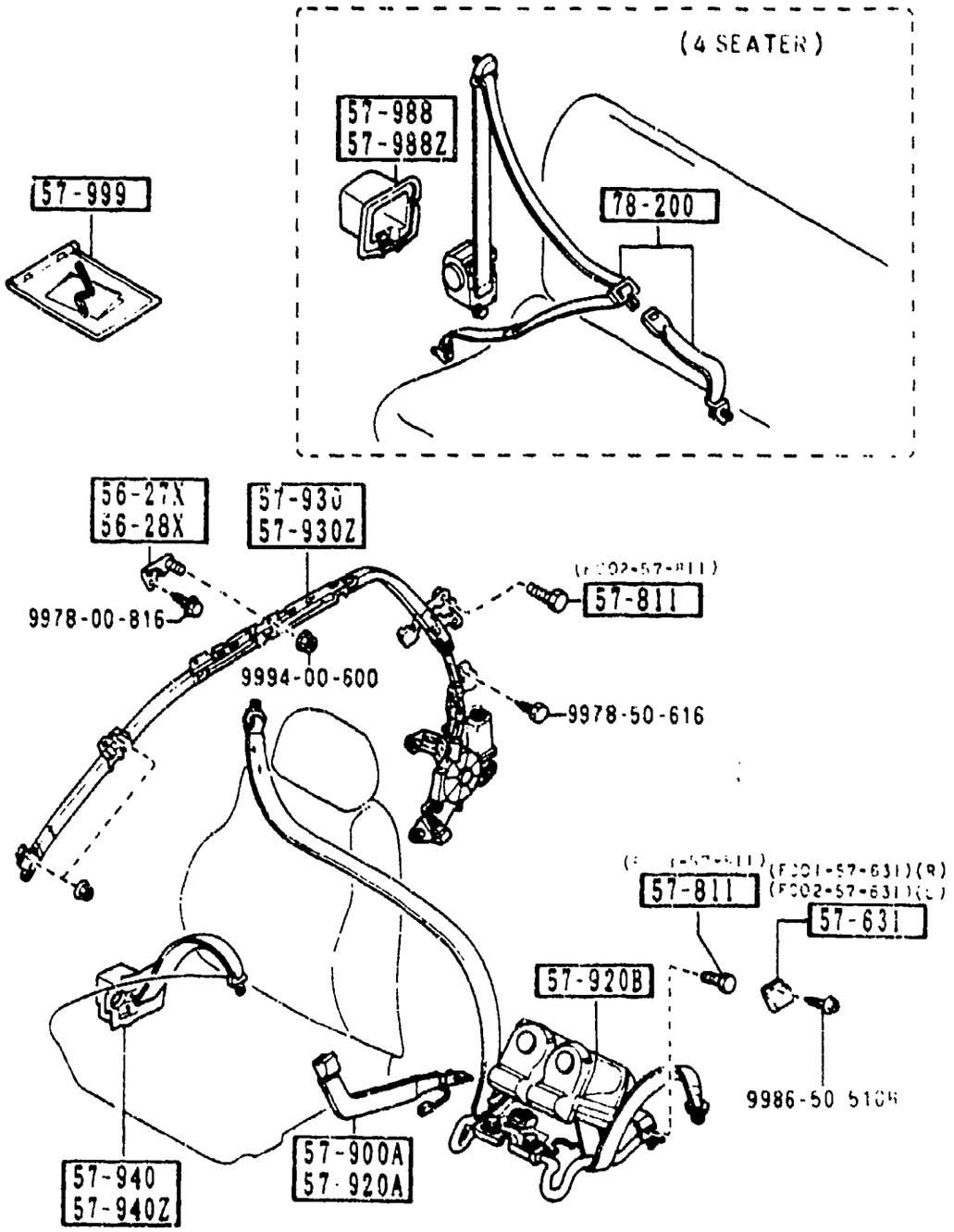


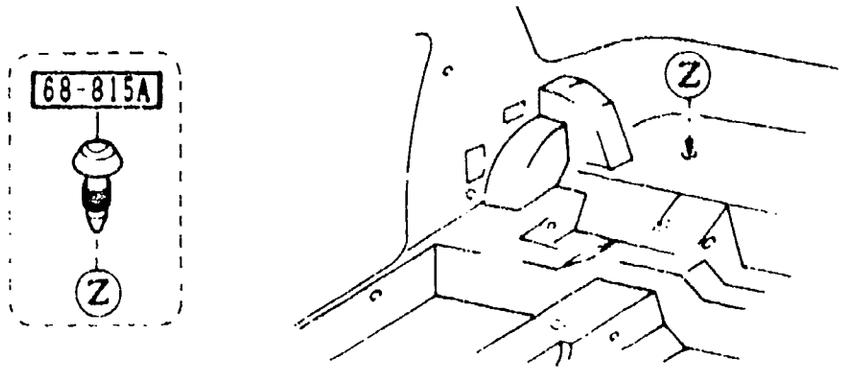


5790 -2 * SEAT BELTS
(COUPE)

| PART NO. | QTY | MODEL/RESTRICTION | MODEL/RESTRICTION | MODEL/RESTRICTION | FROM-TO |
|---|---|---|---|---|---|
| 57-930 | | BELT'B'(R),AUTO SHOULDER | | | |
| FC01-57-930B | 1 | | | | |
| 57-930Z | | BELT'B'(L),AUTO SHOULDER | | | |
| FC01-57-990B | 1 | | | | |
| 57-940 | | BELT(R),LAP | | | |
| FC01-57-940B | 1 | | | | |
| 02 | | FD8 BLACK | | | |
| 19 | | FE0 RED | | | |
| 48 | | FD9 BLUE | | | |
| 57-940Z | | BELT(L),LAP | | | |
| FC01-57-980B | 1 | | | | |
| 02 | | FD8 BLACK | | | |
| 19 | | FE0 RED | | | |
| 48 | | FD9 BLUE | | | |
| 57-988 | | COVER(R),RETRACTOR | | | |
| FB26-57-988 | 1 | (4SEATER) | | | |
| 57-988Z | | COVEP(L),RETRACTOR | | | |
| FB26-57-989 | 1 | (4SEATER) | | | |
| 57-999 | | HANDLE,EMERGENCY | | | |
| GJ12-57-999A | 1 | | | | -9202 |
| FC01-57-999A (FC01-57-999A) | 1 | | | | 9202-9901 |
| FC01-57-999A | 1 | | | | 9901- |
| 68-815A | | TACKER | | | |
| 1011-68-815 | 2 | | | | |
| 78-200 | | BELT,REAR SEAT | | | |
| FC01-57-710 | 2 | (4SEATER) | | | |
| 00 | | FD8 BLACK | | | 9401- |
| 02 | | FD8 BLACK | | | -9401 |
| 19 | | FE0 RED | | | |
| 48 | | FD9 BLUE | | | |

9202 FC3***-702073
9401 FC3***-705390
9901 FC3***-802200

| LO.NO | SEC.NO | SECTION NAME |
|---|---|---|
| 3-C03 | 0900 | KEY SETS |
| 3-F03 | 5000 | FRONT BUMPER |
| 3-H03 | 5010 | REAR BUMPER |
| 3-J03 | 5020 | HEAD LAMP CLEANER |
| 3-L03 | 5030 | WINDOW MOULDINGS |
| 3-M03 | 5040 | BODY MOULDINGS (COUPE) |
| 3-E04 | 5060 | SIDE PROTECTORS |
| 3-I04 | 5100 | HEAD LAMPS |
| 3-J04 | 5103 | HEAD LAMP RETRACTORS |
| 3-N04 | 5105 | FRONT COMBINATION LAMPS |
| 3-G05 | 5110 | REAR COMBINATION LAMPS |
| 3-K05 | 5120 | LICENSE LAMPS |
| 3-M05 | 5125 | INTERIOR LAMPS |
| 3-N05 | 5130 | OVERHEAD CONSOLE |
| 3-C06 | 5170 | ORNAMENTS |
| 3-D06 | 5180 | COWL & EXTRACTOR GRILLES |
| 3-G06 | 5230 | BONNET |
| 3-J06 | 5260 | TRUNK LID (CONVERTIBLE) |
| 3-L06 | 5310 | BODY PANELS (FRONT) (COUPE) |
| 3-C07 | 5310 A | BODY PANELS (FRONT) (CONVERTIBLE) |
| 3-F07 | 5320 | BODY PANELS (FENDER & WHEEL APRON) |
| 3-K07 | 5330 | BODY PANELS (DASH & COWL PANEL) |
| 3-L07 | 5340 | BODY PANELS (SIDE) (COUPE) |
| 3-E08 | 5340A | BODY PANELS (SIDE) (CONVERTIBLE) |
| 3-K08 | 5360 | BODY PANELS (ROOF) (W/O SUN ROOF) |
| 3-L08 | 5360 A | BODY PANELS (ROOF) (SUN ROOF) |
| 3-M08 | 5370 | BODY PANELS (FLOOR) (COUPE) |
| 3-D09 | 5370 A | BODY PANELS (FLOOR) (CONVERTIBLE) |
| 3-H09 | 5380 | FLOOR ATTACHMENTS (HOLE COVERS) |
| 3-J09 | 5390 | FLOOR ATTACHMENTS |
| 3-C10 | 5500 | DASHBOARD EQUIPMENTS |
| 3-F10 | 5520 | METER HOOD |
| 3-G10 | 5530 | SPEEDOMETER CABLE |
| 3-H10 | 5540 | METER COMPONENTS |
| 3-J10 | 5560 | DASHBOARD & RELATED PARTS |
| 3-E11 | 5570 | CONSOLE |
| 3-H11 | 5580 | VENTILATOR |
| 3-J11 | 5700 | FRONT SEATS (COUPE) |
| 3-E13 | 5700A | FRONT SEATS (CONVERTIBLE) |
| 3-K13 | 5750 | REAR SEATS (COUPE) |
| 3-M13 | 5790 | SEAT BELTS (COUPE) |
| 3-C14 | 5790A | SEAT BELTS (CONVERTIBLE) |
| 3-D14 | 5800 | FRONT DOORS (COUPE) |
| 3-G14 | 5800A | FRONT DOORS (CONVERTIBLE) |
| 3-K14 | 5830 | FRONT DOOR MECHANISMS (COUPE) |
| 3-F15 | 5830A | FRONT DOOR MECHANISMS (CONVERTIBLE) |
| 3-J15 | 5840 | FRONT DOOR TRIMS & RELATED PARTS (COUPE) |
| 3-H16 | 5840A | FRONT DOOR TRIMS & RELATED PARTS (CONVERTIBLE) |



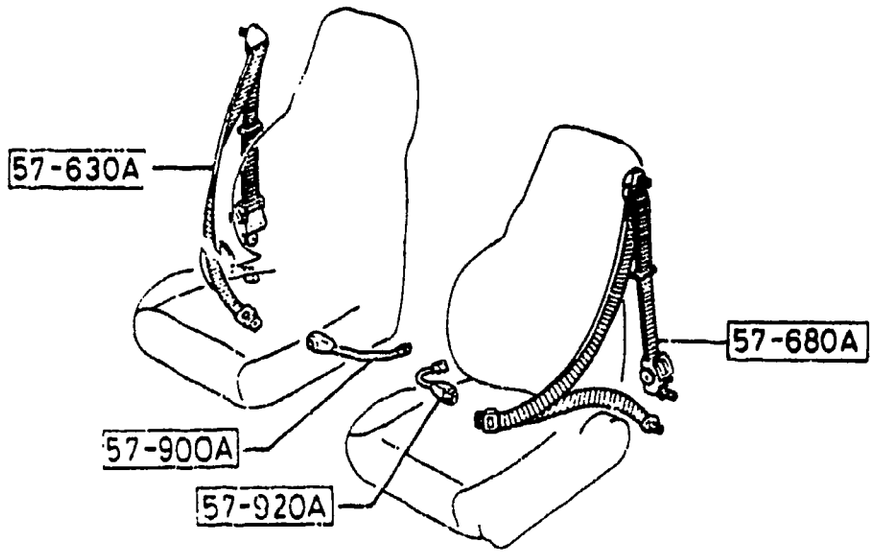


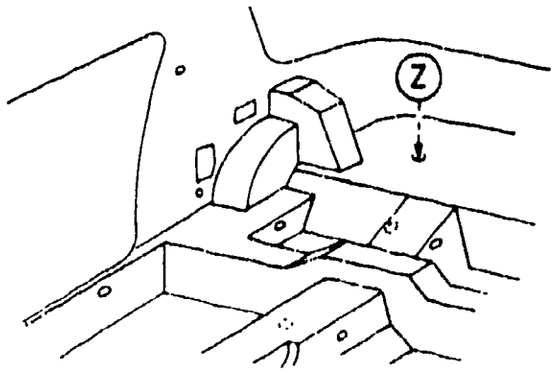


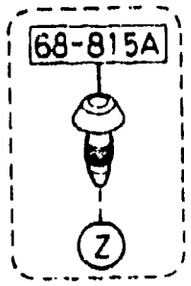


5790A -1 M SEAT BELTS
(CONVERTIBLE)

| PART NO. | QTY | MODEL/RESTRICTION | MODEL/RESTRICTION | MODEL/RESTRICTION | FROM-TO |
|---|---|---|---|---|---|
| 57-630A | | BELT'B'(R),FRT SEAT | | | |
| FC33-57-630 | 1 | | | | |
| 00 | | FD8 BLACK | | | |
| 48 | | FD9 BLUE | | | |
| 57-680A | | BELT'B'(L),FRT SEAT | | | |
| FC33-57-690 | 1 | (W/O AIR BAG) | | | |
| 00 | | FD8 BLACK | | | |
| 48 | | FD9 BLUE | | | |
| FC66-57-690A | 1 | (W/AIR BAG) | | | |
| 00 | | FD8 BLACK | | | |
| 48 | | FD9 BLUE | | | |
| 57-900A | | BELT'A'(R),FRT SEAT | | | |
| FB10-57-620C | 1 | | | | |
| 02 | | FD8 FE1 BLACK | | | |
| 48 | | FD9 BLUE | | | |
| 57-920A | | BELT'A'(L),FRT SEAT | | | |
| FB10-57-680A | 1 | | | | |
| 02 | | FD8 FE1 BLACK | | | |
| 48 | | FD9 BLUE | | | |
| 68-815A | | TACKER | | | |
| 1011-68-815 | 2 | | | | |

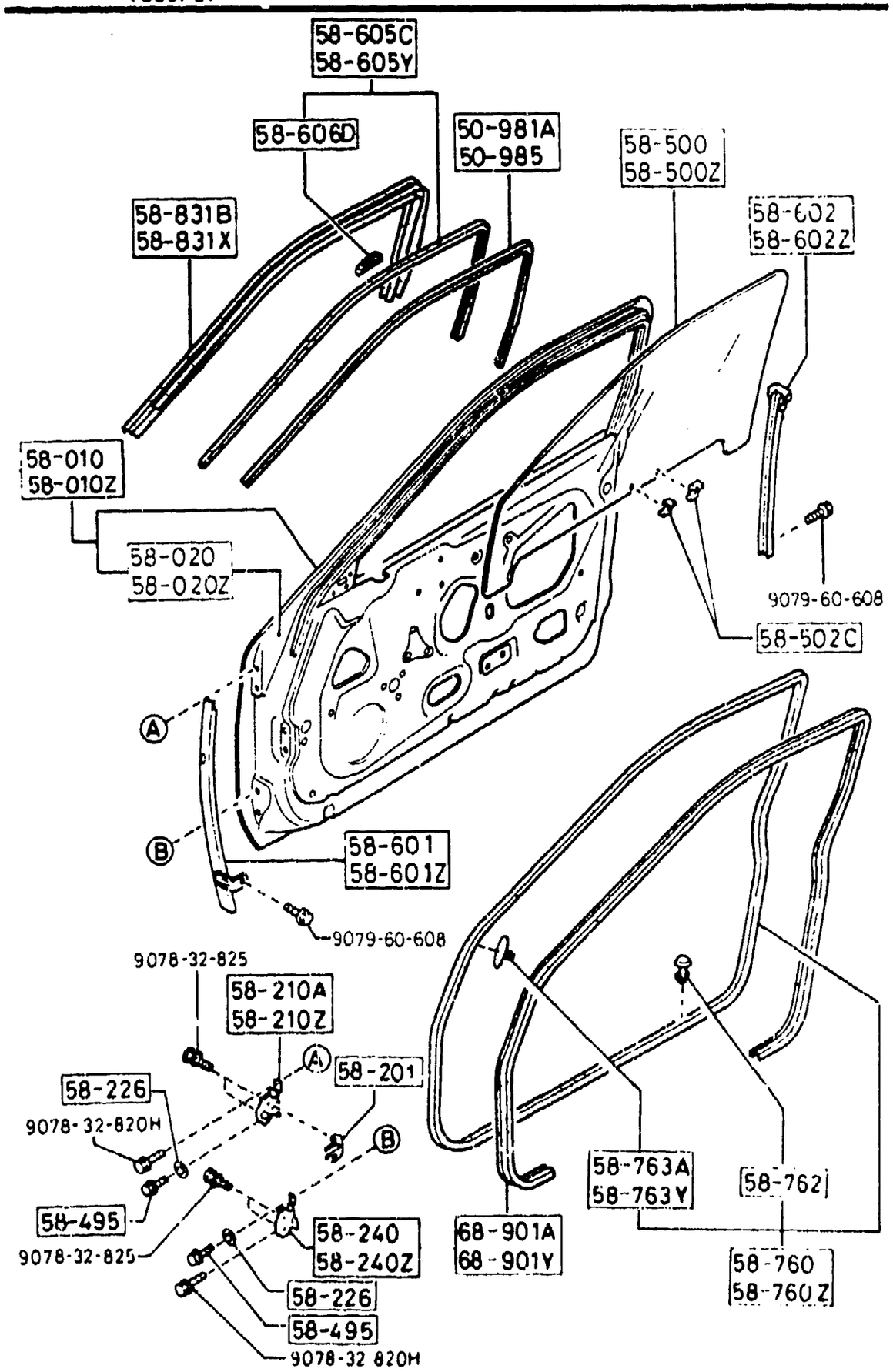


AUFA02



| PART NO. | QTY | MODEL/RESTRICTION | MODEL/RESTRICTION | MODEL/RESTRICTION | FROM-TO |
|---|---|---|---|---|---|
| 50-981A | | MOULD(R),SASH-DOOR | | | |
| FB01-50-981B | 1 | | | | |
| 50-985 | | MOULD(L),SASH-DOOR | | | |
| FB01-50-985B | 1 | | | | |
| 58-010 | | BODY(R),FRONT DOOR | | | |
| FC01-58-020A | 1 | | | | |
| 58-010Z | | BODY(L),FRONT DOOR | | | |
| FC01-59-020A | 1 | | | | |
| 58-020 | | PANEL(R),OUT.-FRT DOOR | | | |
| FC01-58-031 | 1 | | | | |
| 58-020Z | | PANEL(L),OUT.-FRT DOOR | | | |
| FC01-59-031 | 1 | | | | |
| 58-201 | | SHIM,HINGE-DOOR | | | |
| B092-58-201 AN(B092-58-201A) | 2 | | | | -9901 |
| B092-58-201A | 2 | | | | 9901- |
| 58-210A | | HINGE,DOOR | | | |
| FB67-58-210 | 1 | | | | |
| 58-210Z | | HINGE(L),DOOR-UPPER | | | |
| FB67-59-210 | 1 | | | | |
| 58-226 | | WASHER,SETTING | | | |
| GJ21-58-226 | 4 | | | | |
| 58-240 | | HINGE(R),DOOR-LOWER | | | |
| FB67-58-240 | 1 | | | | |
| 58-240Z | | HINGE(L),DOOR-LOWER | | | |
| FB67-59-240 | 1 | | | | |
| 58-495 | | BOLT,SET | | | |
| BA54-58-225 | 4 | | | | |

9901 FC3####-802200

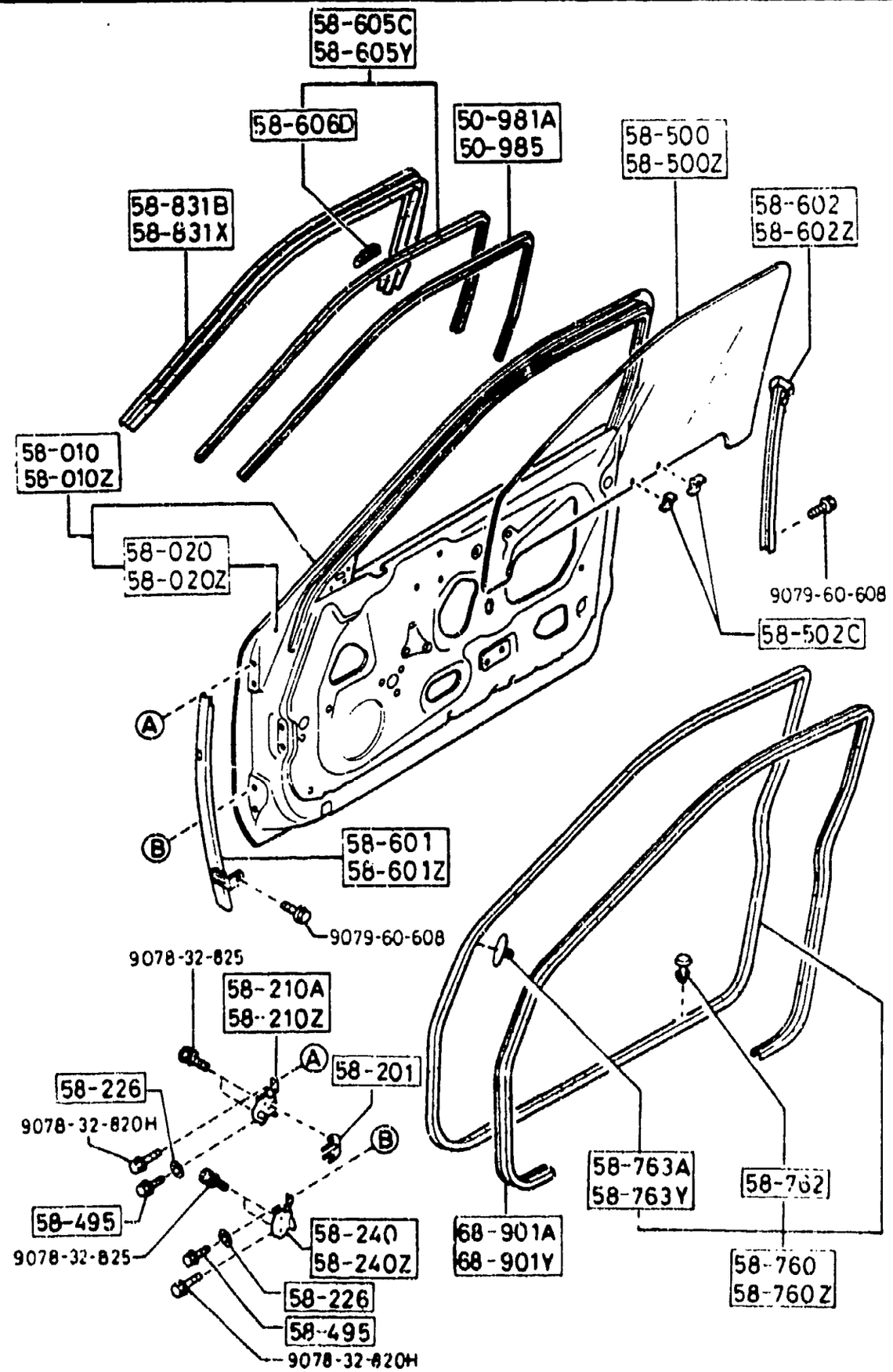






| PART NO. | QTY | MODEL/RESTRICTION | MODEL/RESTRICTION | MODEL/RESTRICTION | FROM-TO |
|---|---|---|---|---|---|
| 58-500 | | GLASS(R),DOOR-FRT | | | |
| FB01-58-511 | 1 | BLUE | | | |
| 58-500Z | | GLASS(L),DOOR-FRT | | | |
| FB01-59-511 | 1 | | | | |
| 58-502C | | GROMMET,SCREW | | | |
| S084-58-502 | 4 | | | | |
| 58-601 | | GUIDE'A'(R),GLASS | | | |
| FB01-58-603B | 1 | | | | |
| 58-601Z | | GUIDE'A'(L),GLASS | | | |
| FB01-59-603B | 1 | | | | |
| 58-602 | | GUIDE'B'(R),GLASS | | | |
| FB01-58-604A | 1 | | | | |
| 58-602Z | | GUIDE'B'(L),GLASS | | | |
| FB01-59-604A | 1 | | | | |
| 58-605C | | CHANNEL(R),GLASS RUN | | | |
| FB01-58-60XC | 1 | | | | -9B11 |
| A (FB01-58-60XD) | | | | | |
| FB01-58-60XD | 1 | | | | 9B11- |
| 58-605Y | | CHANNEL(L),GLASS RUN | | | |
| FB01-59-60XC | 1 | | | | -9B11 |
| A (FB01-59-60XD) | | | | | |
| FB01-59-60XD | 1 | | | | 9B11- |
| 58-606D | | ADJUSTER,GLASS-FRT D OOR | | | |
| FB01-58-606A | 2 | | | | |
| 58-760 | | WEATHERSTRIP(R),DOOR | | | |
| FB01-58-760C | 1 | | | | |
| 58-760Z | | WEATHERSTRIP(L),DOOR | | | |
| FB01-59-760C | 1 | | | | |

9B11 FC3####-804430

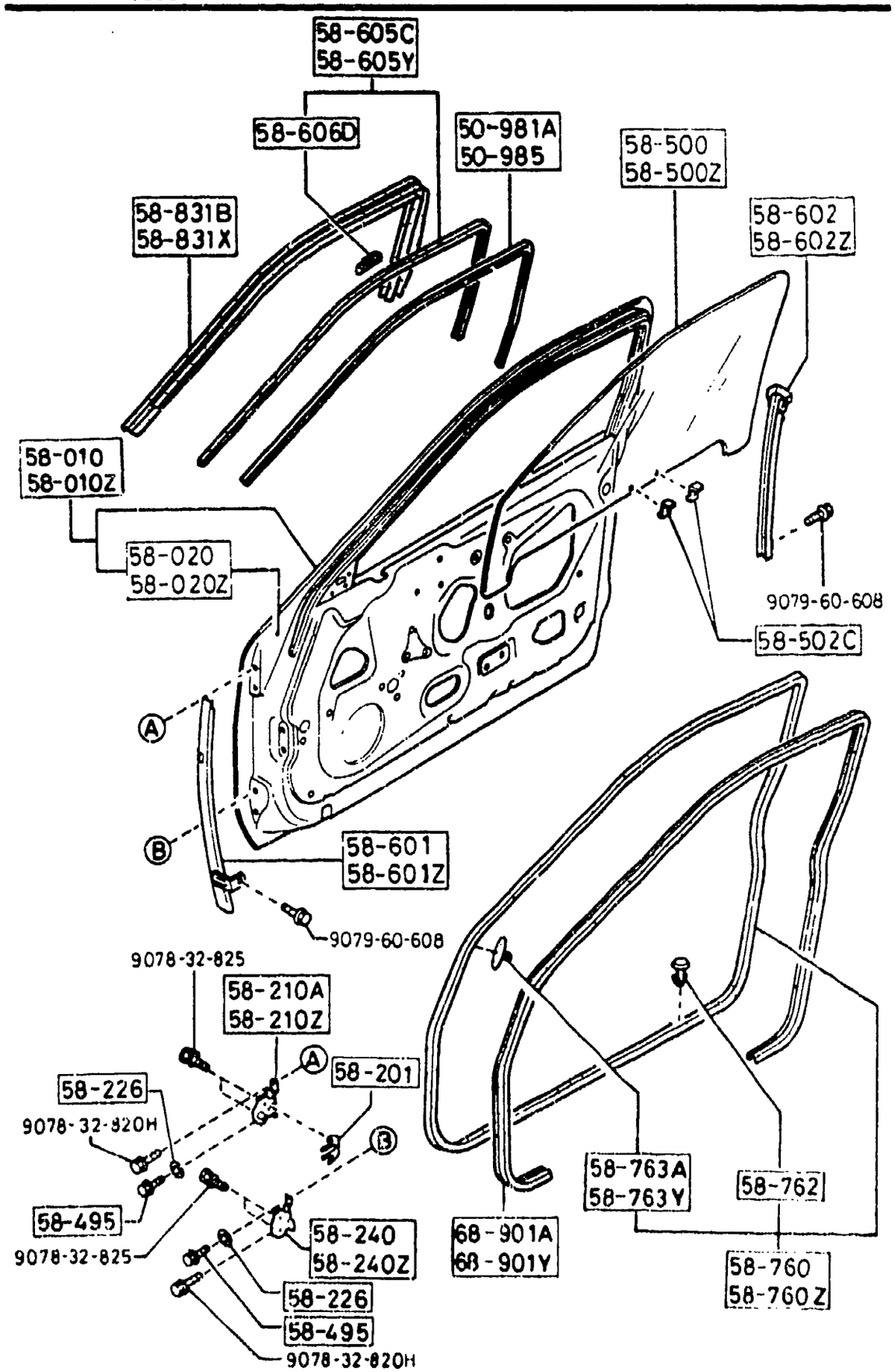






| PART NO. | QTY | MODEL/RESTRICTION | MODEL/RESTRICTION | MODEL/RESTRICTION | FROM-TO |
|---|---|---|---|---|---|
| 58-762 | | FASTENER | | | |
| G031-58-762 | 52 | | | | |
| 58-763A | | FASTENER(R) | | | |
| FB02-58-762A | 2 | | | | |
| 58-763Y | | FASTENER(L) | | | |
| FB02-59-762A | 2 | | | | |
| 58-831B | | WEATHERSTRIP(R),RAIN RAIL | | | |
| FB01-58-831E | 1 | | | | |
| 58-831X | | WEATHERSTRIP(L),RAIN RAIL | | | |
| FB01-59-831E | 1 | | | | |
| 68-901A | | WELT(R),SEAMING | | | |
| FB01-68-911 | 1 | | | | |
| 02 | | FD8 FE1 BLACK | | | |
| 19 | | FE0 RED | | | |
| 48 | | FD9 BLUE | | | |
| 68-901Y | | WELT(L),SEAMING | | | |
| FB01-68-912 | 1 | | | | |
| 02 | | FD8 FE1 BLACK | | | |
| 19 | | FE0 RED | | | |
| 48 | | FD9 BLUE | | | |

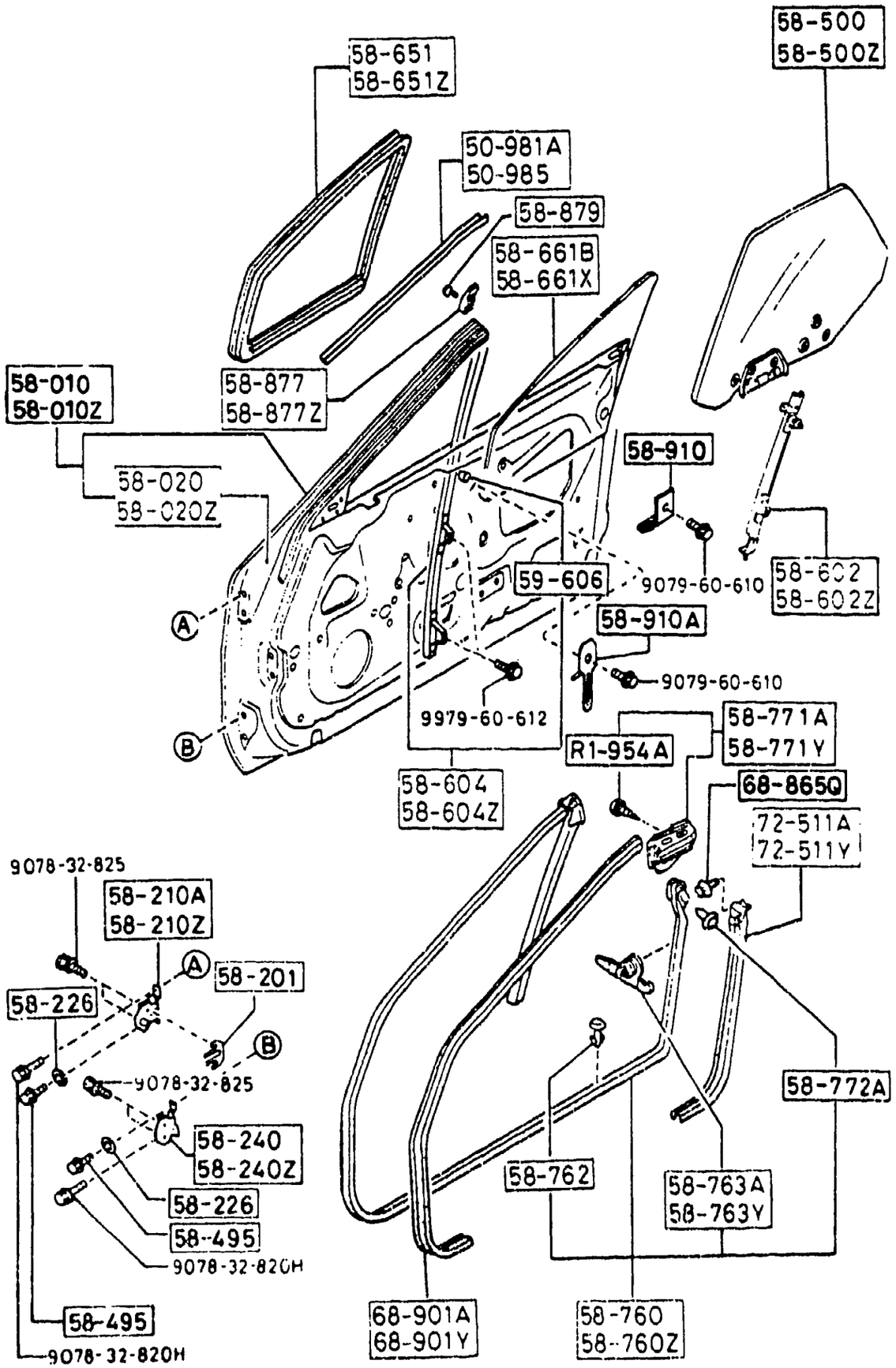


AUFA02



| PART NO. | QTY | MODEL/RESTRICTION | MODEL/RESTRICTION | MODEL/RESTRICTION | FROM-TO |
|---|---|---|---|---|---|
| R1-954A | | HOOK,SCREW-QTR TRIM | | | |
| FB67-R1-954A | 2 | | | | |
| 50-981A | | MOULD(R),SASH-DOOR | | | |
| FB67-50-981A | 1 | | | | |
| 50-985 | | MOULD(L),SASH-DOOR | | | |
| FB67-50-985A | 1 | | | | |
| 58-010 | | BODY(R),FRONT DOOR | | | |
| FC33-58-020A | 1 | | | | |
| 58-010Z | | BODY(L),FRONT DOOR | | | |
| FC33-59-020A | 1 | | | | |
| 58-020 | | PANEL(R),OUT.-FRT DOOR | | | |
| FC33-58-031 | 1 | | | | |
| 58-020Z | | PANEL(L),OUT.-FRT DOOR | | | |
| FC33-59-031 | 1 | | | | |
| 58-201 | | SHIM,HINGE-DOOR | | | |
| B092-58-201 | 2 | | | | -9901 |
| AN(B092-58-201A) | | | | | |
| B092-58-201A | 2 | | | | 9901- |
| 58-210A | | HINGE,DOOR | | | |
| FB67-58-210 | 1 | | | | |
| 58-210Z | | HINGE(L),DOOR-UPPER | | | |
| FB67-59-210 | 1 | | | | |
| 58-226 | | WASHER,SETTING | | | |
| GJ21-58-226 | 4 | | | | |
| 58-240 | | HINGE(R),DOOR-LOWER | | | |
| FB67-58-240 | 1 | | | | |
| 58-240Z | | HINGE(L),DOOR-LOWER | | | |
| FB67-59-240 | 1 | | | | |

9901 FC3####-802200

CAT. AUFA02-06

1992-05

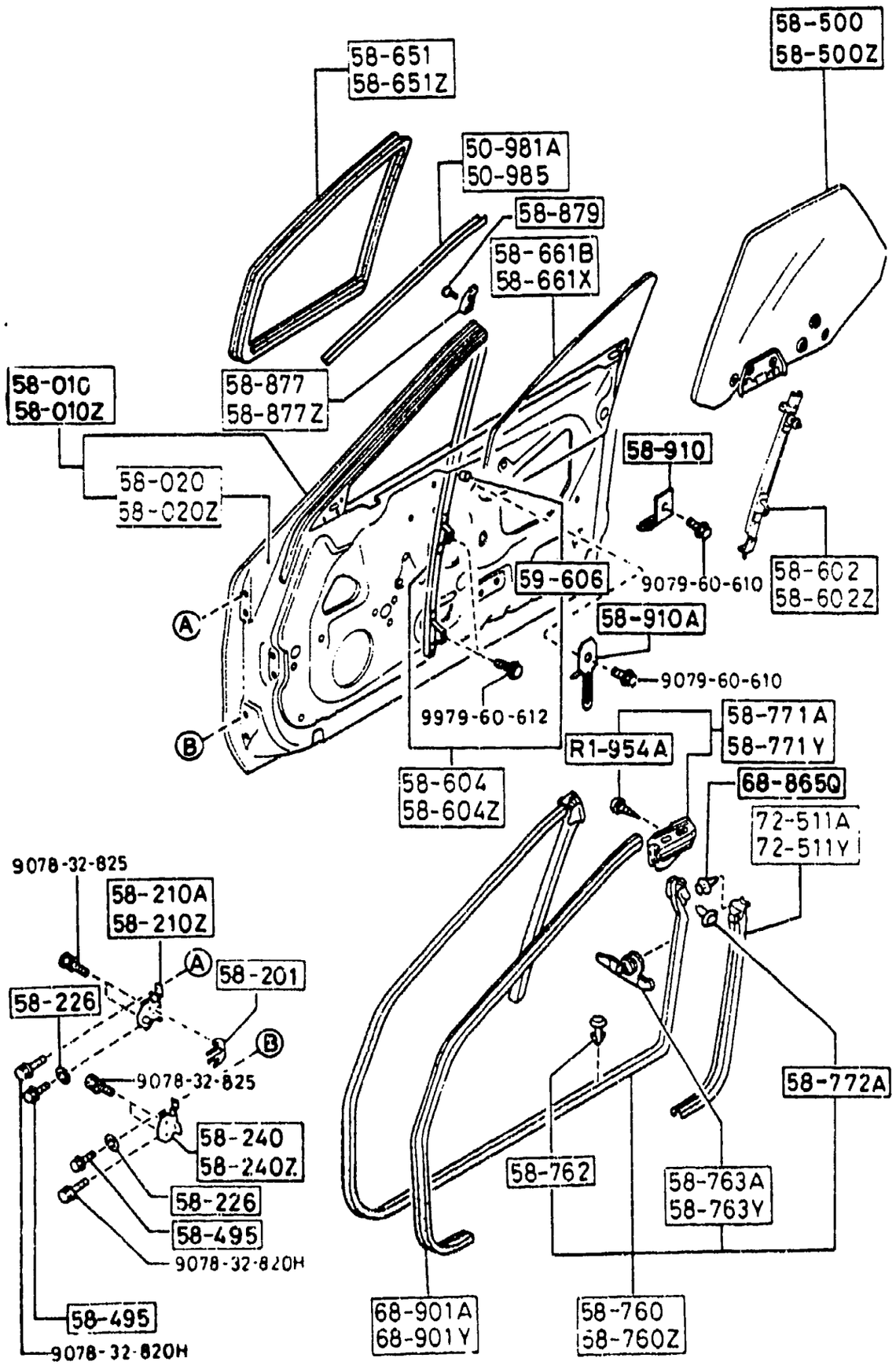


AUFA02



| PART NO. | QTY | MODEL/RESTRICTION | MODEL/RESTRICTION | MODEL/RESTRICTION | FROM-TO |
|---|---|---|---|---|---|
| 58-495 | | BOLT,SET | | | |
| BA54-58-225 | 4 | | | | |
| 58-500 | | GLASS(R),DOOR-FRT | | | |
| FB67-58-510C | 1 | | | | |
| 58-500Z | | GLASS(L),DOOR-FRT | | | |
| FB67-59-510C | 1 | | | | |
| 58-602 | | GUIDE'B'(R),GLASS | | | |
| FB67-58-61XB | 1 | | | | |
| 58-602Z | | GUIDE'B'(L),GLASS | | | |
| FB67-59-61XB | 1 | | | | |
| 58-604 | | CHANNEL(R),DIVISION-DOOR | | | |
| FB67-58-6A0A | 1 | | | | |
| 58-604Z | | CHANNEL(L),DIVISION-DOOR | | | |
| FB67-59-6A0A | 1 | | | | |
| 58-651 | | WEATHERSTRIP(R) | | | |
| FB67-58-651 | 1 | | | | |
| 58-651Z | | WEATHERSTRIP(L) | | | |
| FB67-59-651 | 1 | | | | |
| 58-661B | | GLASS(R),QUARTER-F.DOOR | | | |
| FB67-58-661B | 1 | | | | |
| 58-661X | | GLASS(L),QUARTER-F.DOOR | | | |
| FB67-59-661B | 1 | | | | |
| 58-760 | | WEATHERSTRIP(R),DOOR | | | |
| FB67-58-760A | 1 | | | | -9421 |
| AN(FB67-58-760B) | | | | | |
| FB67-58-760B | 1 | | | | 9421- |
| 58-760Z | | WEATHERSTRIP(L),DOOR | | | |
| FB67-59-760A | 1 | | | | -9421 |
| AN(FB67-59-760B) | | | | | |

9421 FC3####-706548

C.T. AUFA02-06

1992-05

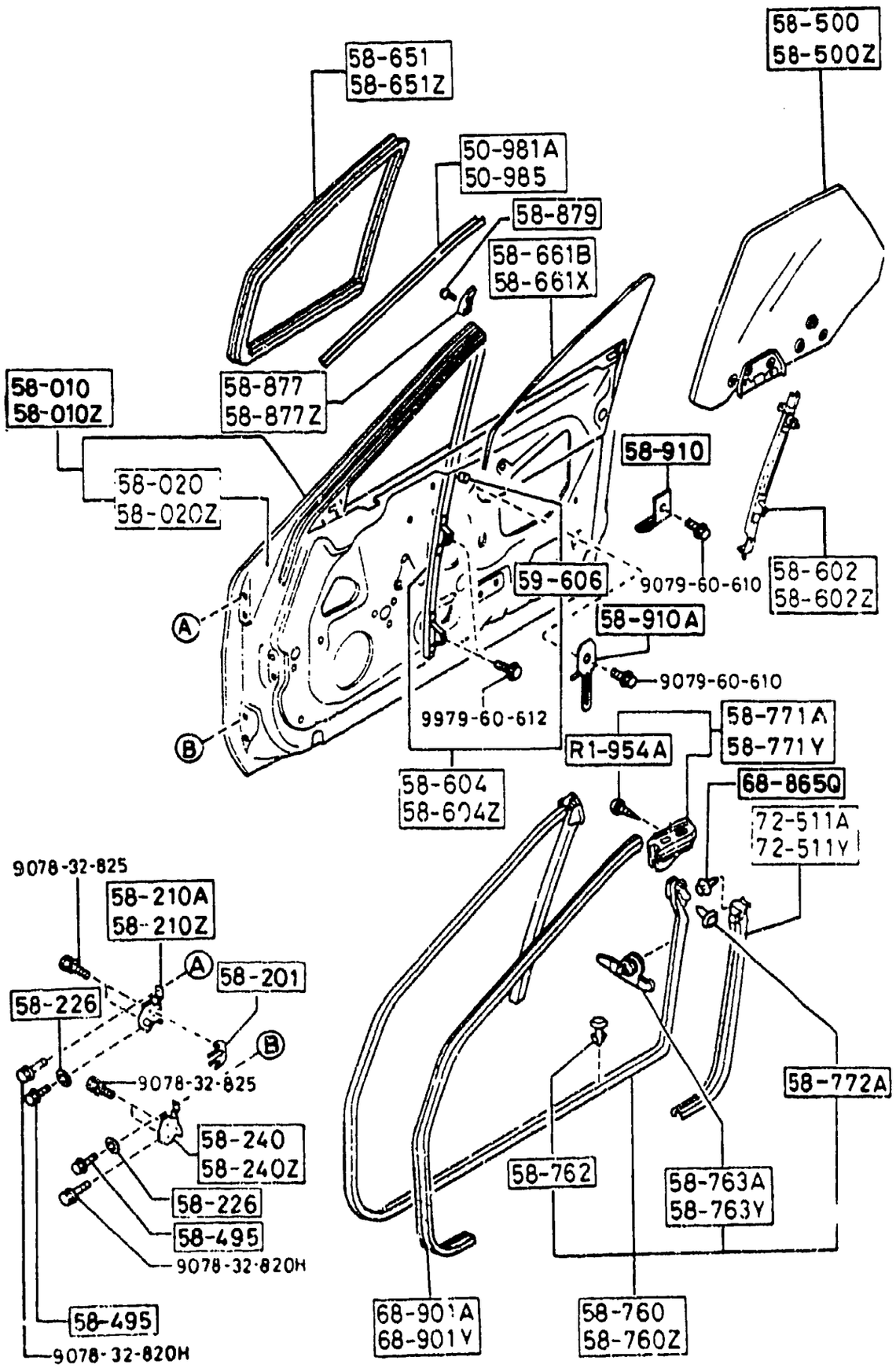


AUFA02



| PART NO. | QTY | MODEL/RESTRICTION | MODEL/RESTRICTION | MODEL/RESTRICTION | FROM-TO |
|---|---|---|---|---|---|
| CONT'D<br>FB67-59-760B | 1 | | | | 9421- |
| 58-762<br>G031-58-762 | 52 | FASTENER | | | |
| 58-763A<br>FB02-58-762A | 2 | FASTENER(R) | | | |
| 58-763Y<br>FB02-59-762A | 2 | FASTENER(L) | | | |
| 58-771A<br>FB67-58-770F | 1 | WEATHERSTRIP(R),CAB. SIDE | | | |
| 58-771Y<br>FB67-59-770F | 1 | WEATHERSTRIP(L),CAB. SIDE | | | |
| 58-772A<br>1011-58-772 | 4 | FASTENER | | | |
| 58-877<br>FB67-58-877C | 1 | PROTECTOR(R),DOOR SASH | | | |
| 58-877Z<br>FB67-59-877C | 1 | PROTECTOR(L),DOOR SASH | | | |
| 58-879<br>FB67-58-879 | 4 | SCREW,PROTECTOR-SASH | | | |
| 58-910<br>H272-58-911 | 2 | STOPPER,GLASS | | | |
| 58-910A<br>FB67-58-910 | 2 | STOPPER,GLASS | | | |
| 59-606<br>FB67-59-606 | 2 | PROTR,STUD-DIVISION CHAN | | | |
| 68-865Q<br>GJ21-68-885A<br>AN(GJ21-68-885B) | 2 | FASTENER | | | -9526 |

9421 FC3####-706548
9526 FC3####-707799

CAT. AUFA02-06

1992-05

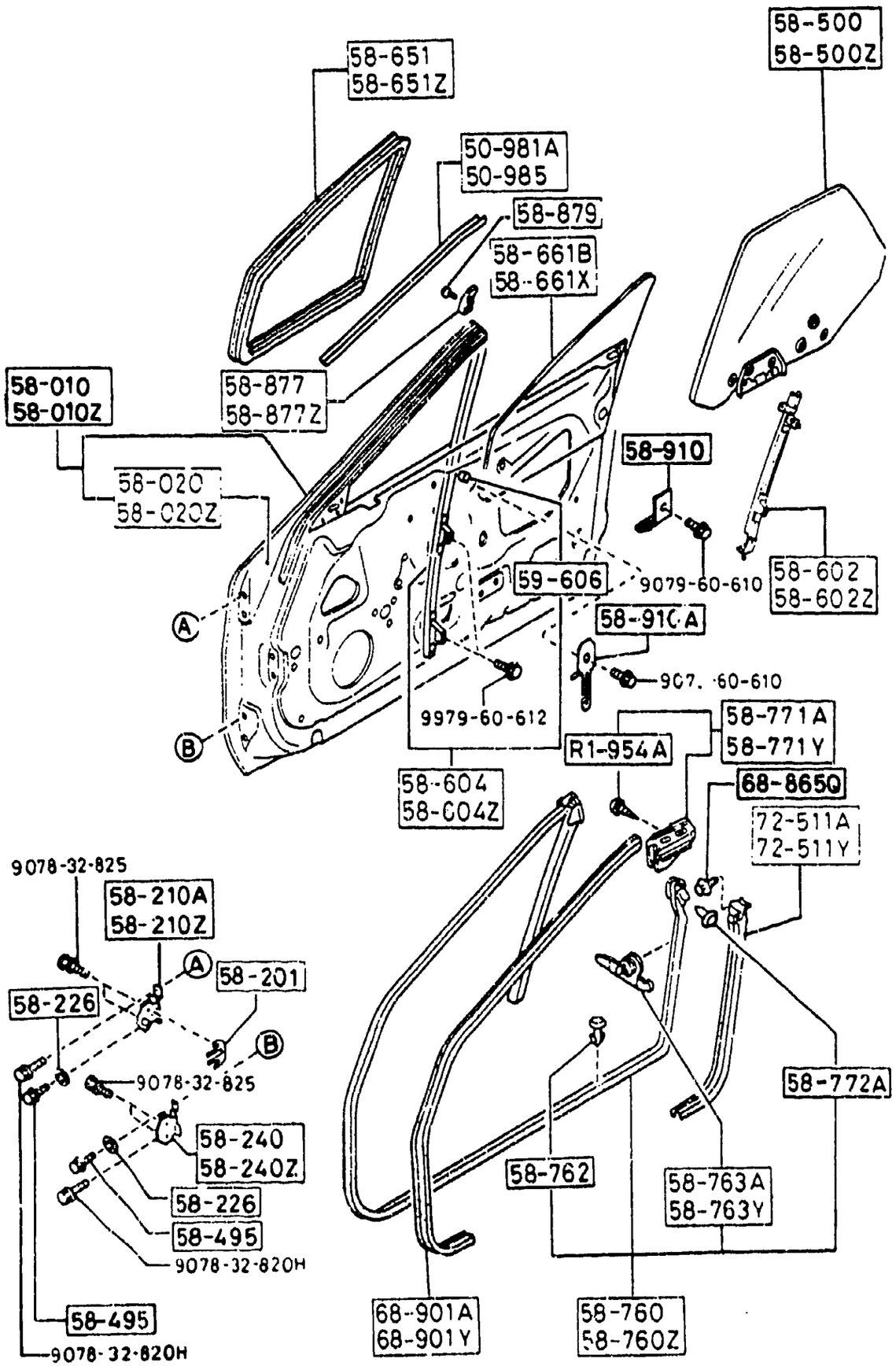


AUFA02



| PART NO. | QTY | MODEL/RESTRICTION | MODEL/RESTRICTION | MODEL/RESTRICTION | FROM-TO |
|---|---|---|---|---|---|
| CONT'D | | | | | |
| 02 | | FD8 BLACK | | | |
| 48 | | FD9 BLUE | | | |
| GJ21-68-885B | 2 | | | | 9526- |
| 02 | | FD8 FE1 BLACK | | | |
| 48 | | FD9 BLUE | | | |
| +---------+ | | | | | |
| \| 68-901A \| | | WELT(R),SEAMING | | | |
| +---------+ | | | | | |
| FB67-68-911B AN(FB67-68-911C) | 1 | | | | -9421 |
| 02 | | FD8 BLACK | | | |
| 48 | | FD9 BLUE | | | |
| FB67-68-911C | 1 | | | | 9421- |
| 02 | | FD8 FE1 BLACK | | | |
| 48 | | FD9 BLUE | | | |
| +---------+ | | | | | |
| \| 68-901Y \| | | WELT(L),SEAMING | | | |
| +---------+ | | | | | |
| FB67-68-912B AN(FB67-68-912C) | 1 | | | | -9421 |
| 02 | | FD8 BLACK | | | |
| 48 | | FD9 BLUE | | | |
| FB67-68-912C | 1 | | | | 9421- |
| 02 | | FD8 FE1 BLACK | | | |
| 48 | | FD9 BLUE | | | |
| +---------+ | | | | | |
| \| 72-511A \| | | WELT(R),SEAMING | | | |
| +---------+ | | | | | |
| FB67-68-921A | 1 | | | | |
| 02 | | FD8 FE1 BLACK | | | |
| 48 | | FD9 BLUE | | | |
| +---------+ | | | | | |
| \| 72-511Y \| | | WELT(L),SEAMING | | | |
| +---------+ | | | | | |
| FB67-68-922A | 1 | | | | |
| 02 | | FD8 FE1 BLACK | | | |
| 48 | | FD9 BLUE | | | |

9421 FC3MMM-706548
9526 FC3MMM-707799

CAT. AUFA02-06

1992-05

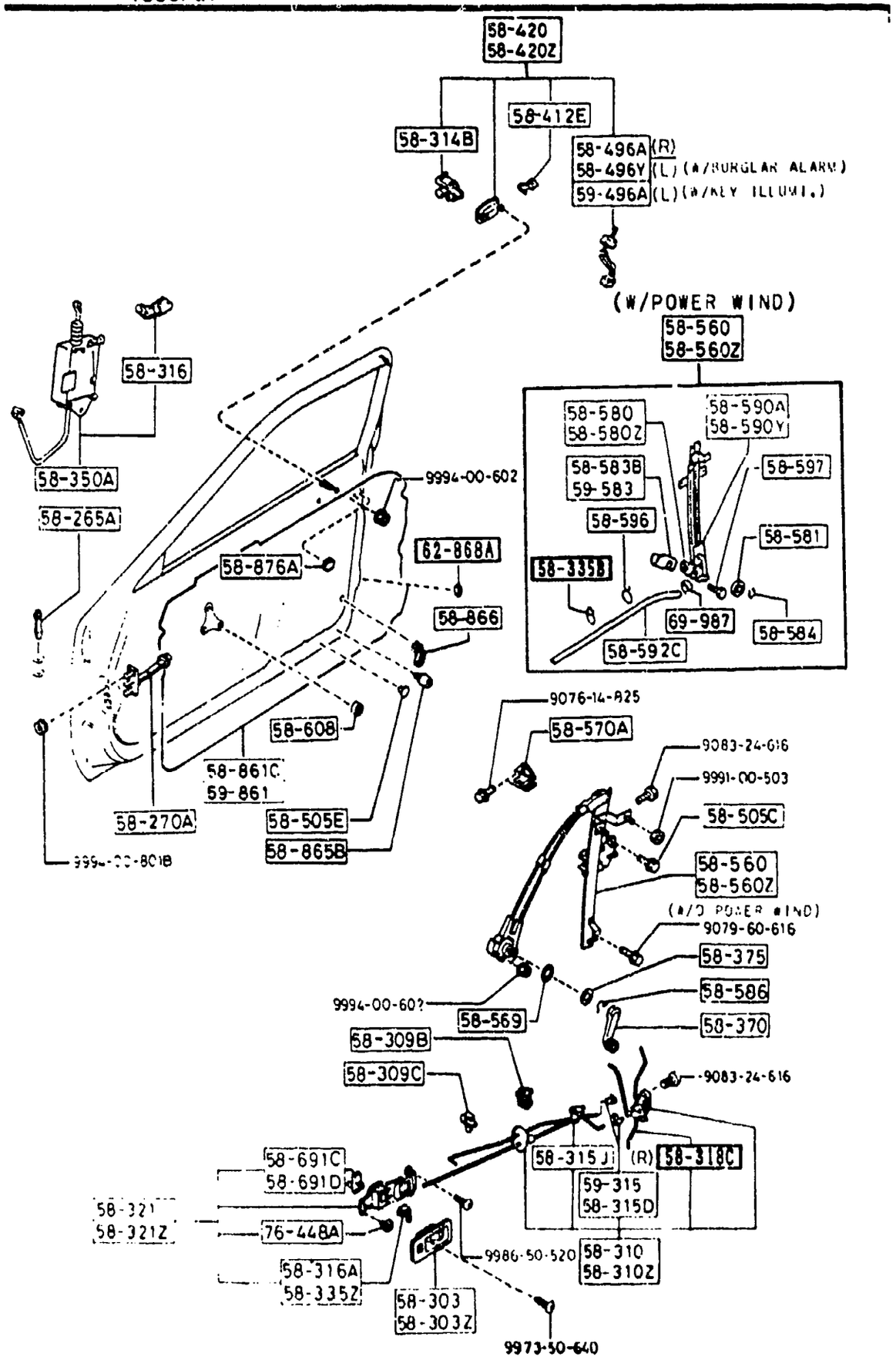


AUFA02



| PART NO. | QTY | MODEL/RESTRICTION | MODEL/RESTRICTION | MODEL/RESTRICTION | FROM-TO |
|---|---|---|---|---|---|
| 58-265A | | PIN,CHECKER | | | |
| H260-58-265C | 2 | | | | |
| 58-270A | | CHECKER,DOOR | | | |
| FB01-58-270B | 2 | | | | |
| 58-303 | | COVER(R),IN.HANDLE | | | |
| FB01-58-303B | 1 | USA,<br>(W/BURGLAR ALARM) | | | |
| 02 | | FD8 FE1 BLACK | | | |
| 19 | | FE0 RED | | | |
| 48 | | FD9 BLUE | | | |
| 58-303Z | | COVER(L),IN.HANDLE | | | |
| FB01-59-303B | 1 | USA,<br>(W/BURGLAR ALARM) | | | |
| 02 | | FD8 FE1 BLACK | | | |
| 19 | | FE0 RED | | | |
| 48 | | FD9 BLUE | | | |
| 58-309B | | HOLDER(UP.),ROD-IN.HANDLE | | | |
| FB02-58-309 | 2 | | | | |
| 58-309C | | HOLDER(LOW),ROD-IN.HANDLE | | | |
| FB01-58-309A | 2 | | | | |
| 58-310 | | LOCK(R),DOOR | | | |
| FC01-58-310 | 1 | ((W/O TURBO)>(W/O A.A.SUSP)) | | | |
| FC02-58-310 | 1 | | | | -9216 |
| C (FC01-58-310) | | | | | |
| FC01-58-310 | 1 | ((W/O TURBO)>(A.A.SUSP))<br>(TURBO) | | | 9216- |
| 58-310Z | | LOCK(L),DOOR | | | |
| FC01-59-310 | 1 | | | | |
| 58-314B | | JOINT | | | |
| H043-72-411 | 2 | USA,<br>(W/BURGLAR ALARM) | | | |

FC02-58-310 9216 FC3####-703396
C FC01-58-310
G030-59-315

CAT. AUFA02-06

1992-05

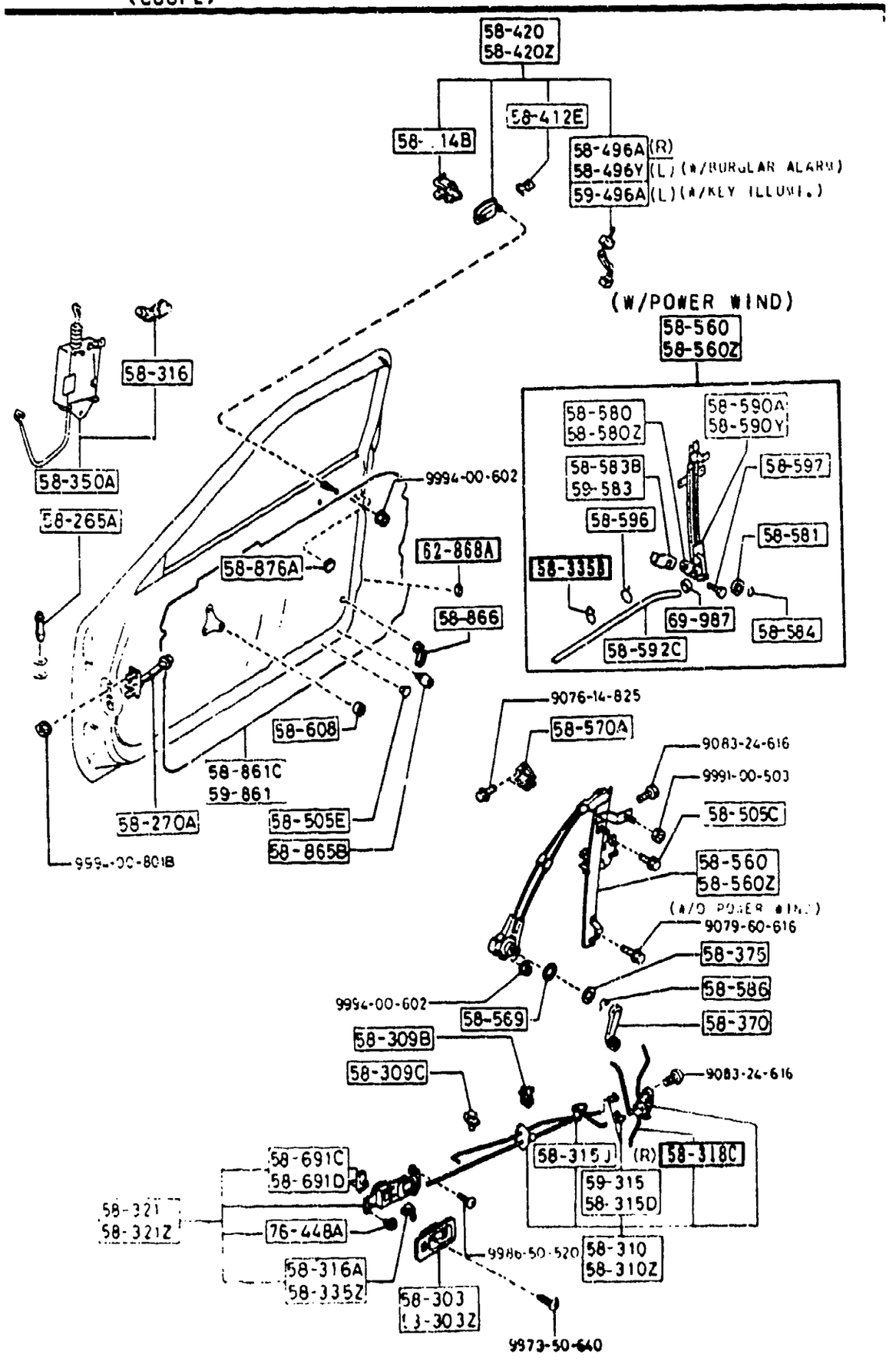


AUFA02



| PART NO. | QTY | MODEL/RESTRICTION | MODEL/RESTRICTION | MODEL/RESTRICTION | FROM-TO |
|---|---|---|---|---|---|
| 58-315D | | CLIP (R) | | | |
| G030-58-315 | 5 | | | | |
| 58-315J | | CLIP | | | |
| H001-58-315 | 2 | | | | |
| 58-316 | | CLIP | | | |
| B093-58-351 | 1 | GXL, TURBO, (W/POWER DR LOCK) | | | |
| 58-316A | | CLIP | | | |
| B001-59-335 | 1 | USA, (W/BURGLAR ALARM) | | | |
| 58-318C | | ROD(R),DOOR LOCK-POWER | | | |
| FB05-58-318 | 1 | GXL, TURBO, (W/POWER DR LOCK) | | | 9216- |
| 58-321 | | HANDLE(R),INNER | | | |
| FB02-58-330A | 1 | USA, (W/BURGLAR ALARM) | | | |
| 02 | | FD8 FE1 BLACK | | | |
| 19 | | FE0 RED | | | |
| 48 | | FD9 BLUE | | | |
| 58-321Z | | HANDLE(L),INNER | | | |
| FB02-59-330A | 1 | USA, (W/BURGLAR ALARM) | | | |
| 02 | | FD8 FE1 BLACK | | | |
| 19 | | FE0 RED | | | |
| 48 | | FD9 BLUE | | | |
| 58-3358 | | CLIP | | | |
| B094-58-595 | 4 | USA, (W/BURGLAR ALARM) | | | |
| 58-335Z | | CLIP(L),INNER HANDLE | | | |
| FB01-58-335 | 1 | USA, (W/BURGLAR ALARM) | | | |
| 58-350A | | ACTUATOR(R),POWER LOCK | | | |
| FB06-58-350A | 1 | GXL, TURBO, (W/POWER DR LOCK) | | | |

9216 FC3MMM-703396

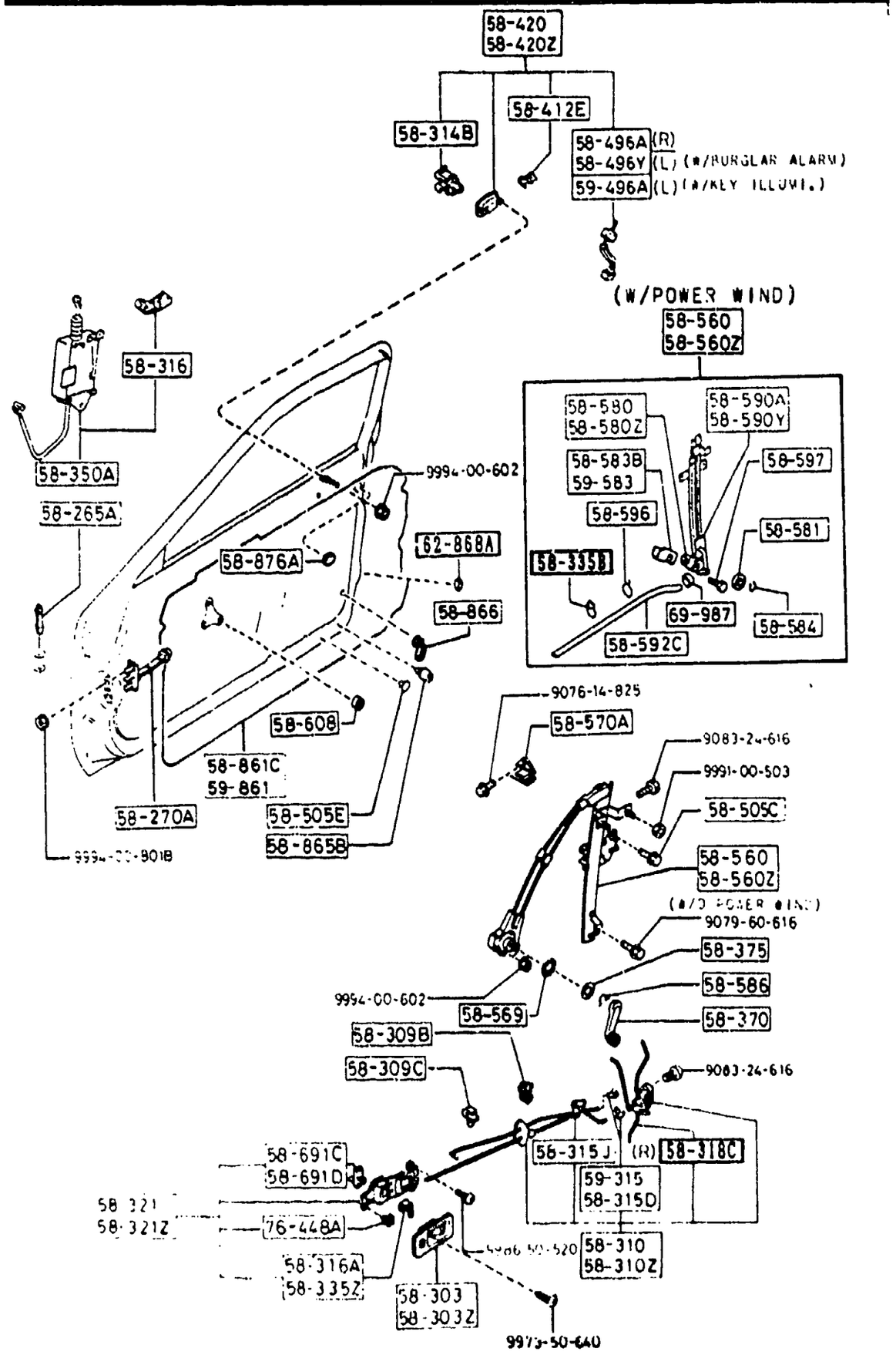


AUFA02



| PART NO. | QTY | MODEL/RESTRICTION | MODEL/RESTRICTION | MODEL/RESTRICTION | FROM-TO |
|---|---|---|---|---|---|
| 58-370 | | HANDLE,REGULATOR | | | |
| B092-58-580 | 2 | GTU, GTUS, (W/O POWER WIND.) | | | |
| 02 | | FD8 FE1 BLACK | | | |
| 19 | | FE0 RED | | | |
| 48 | | FD9 BLUE | | | |
| 58-375 | | ESCUSTCHEON | | | |
| B001-58-582A | 2 | GTU, GTUS, (W/O POWER WIND.) | | | |
| 02 | | FD8 FE1 BLACK | | | |
| 19 | | FE0 RED | | | |
| 48 | | FD9 BLUE | | | |
| 58-412E | | CLIP,HARNESS-OUT. HANDLE | | | |
| FB01-58-412 | 2 | USA, (W/BURGLAR ALARM) | | | |
| 58-420 | | HANDLE(R),OUT. | | | |
| FB02-58-410B | 1 | USA, (W/BURGLAR ALARM) | | | |
| PZ | | PZ BRILLIANT BLACK | | | |
| SQ | | SQ BLAZE RED | | | |
| UC | | UC CRYSTAL WHITE | | | |
| WY | | WY NOBLE WHITE | | | |
| 1F | | 1F WINNING SILVER M. | | | |
| 3G | | 3G SHADOW SILVER METALL | | | |
| 5D | | 5D HARBOR BLUE M. | | | |
| 6H | | 6H MELLOW BURGUNDY MC | | | |
| 58-420Z | | HANDLE(L),OUT. | | | |
| FB02-59-410B | 1 | GTU, GTUS, (W/O KEY ILLUMI.) | | | |
| PZ | | PZ BRILLIANT BLACK | | | |
| SQ | | SQ BLAZE RED | | | |
| UC | | UC CRYSTAL WHITE | | | |
| WY | | WY NOBLE WHITE | | | |
| 1F | | 1F WINNING SILVER M. | | | |

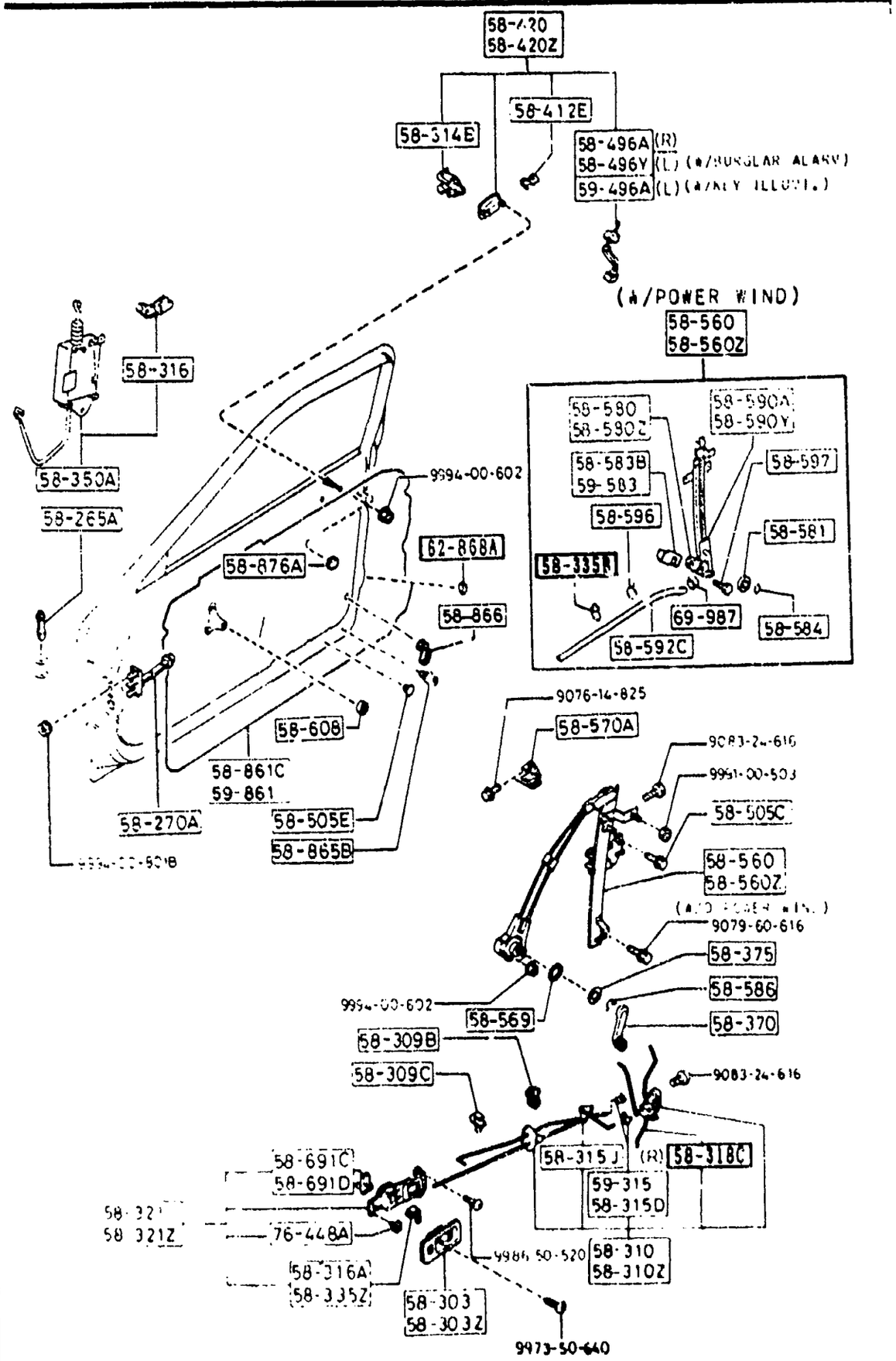


AUFA02

5830 -4 FRONT DOOR MECHANISMS
(COUPE)

| PART NO. | QTY | MODEL/RESTRICTION | MODEL/RESTRICTION | MODEL/RESTRICTION | FROM-TO |
|---|---|---|---|---|---|
| CONT'D | | | | | |
| 3G | | 3G SHADOW SILVER METALL | | | |
| 5D | | 5D HARBOR BLUE M. | | | |
| 6H | | 6H MELLOW BURGUNDY MC | | | |
| FB06-59-410C | 1 | GXL, TURBO, (W/KEY ILLUMI.) | | | |
| PZ | | PZ BRILLIANT BLACK | | | |
| SQ | | SQ BLAZE RED | | | |
| UC | | UC CRYSTAL WHITE | | | |
| WY | | WY NOBLE WHITE | | | |
| 1F | | 1F WINNING SILVER M. | | | |
| 3G | | 3G SHADOW SILVER METALL | | | |
| 5D | | 5D HARBOR BLUE M. | | | |
| 6H | | 6H MELLOW BURGUNDY MC | | | |
| +----------+ \| 58-496A \| +----------+ FB03-58-496 | 1 | SWITCH(R),LOCK-CYLINDER USA, (W/BURGLAR ALARM) | | | |
| +----------+ \| 58-496Y \| +----------+ FB03-59-496 | 1 | SWITCH(L),LOCK-CYLINDER USA, (W/BURGLAR ALARM) | | | |
| +----------+ \| 58-505C \| +----------+ B092-58-505 | 4 | SCREW,WINDOW REGULATOR USA, (W/BURGLAR ALARM) | | | |
| +----------+ \| 58-505E \| +----------+ | | CAP | | | |
| B092-58-355 | 1 | GXL, TURBO, (W/POWER WIND.) | | | |
| | 2 | GTU, GTUS, (W/O POWER WIND.) | | | |
| +----------+ \| 58-560 \| +----------+ | | REGULATOR(R),WINDOW | | | |
| FB01-58-560E | 1 | GTU, GTUS, (W/O POWER WIND.) | | | |
| FB05-58-560J | 1 | GXL, TURBO, (W/POWER WIND.) | | | |

CAT. AUFA02-06

1992-05

SECTION NAME INDEX (BODY)1/2

| LO.NO | SEC.NO | SECTION NAME |
|---|---|---|
| 3-C03 | 0900 | KEY SETS |
| 3-F03 | 5000 | FRONT BUMPER |
| 3-H03 | 5010 | REAR BUMPER |
| 3-J03 | 5020 | HEAD LAMP CLEANER |
| 3-L03 | 5030 | WINDOW MOULDINGS |
| 3-M03 | 5040 | BODY MOULDINGS (COUPE) |
| 3-E04 | 5060 | SIDE PROTECTORS |
| 3-I04 | 5100 | HEAD LAMPS |
| 3-J04 | 5103 | HEAD LAMP RETRACTORS |
| 3-N04 | 5105 | FRONT COMBINATION LAMPS |
| 3-G05 | 5110 | REAR COMBINATION LAMPS |
| 3-K05 | 5120 | LICENSE LAMPS |
| 3-M05 | 5125 | INTERIOR LAMPS |
| 3-N05 | 5130 | OVERHEAD CONSOLE |
| 3-C06 | 5170 | ORNAMENTS |
| 3-D06 | 5180 | COWL & EXTRACTOR GRILLES |
| 3-G06 | 5230 | BONNET |
| 3-J06 | 5260 | TRUNK LID (CONVERTIBLE) |
| 3-L06 | 5310 | BODY PANELS (FRONT) (COUPE) |
| 3-C07 | 5310 A | BODY PANELS (FRONT) (CONVERTIBLE) |
| 3-F07 | 5320 | BODY PANELS (FENDER & WHEEL APRON) |
| 3-K07 | 5330 | BODY PANELS (DASH & COWL PANEL) |
| 3-L07 | 5340 | BODY PANELS (SIDE) (COUPE) |
| 3-E08 | 5340 A | BODY PANELS (SIDE) (CONVERTIBLE) |
| 3-K08 | 5360 | BODY PANELS (ROOF) (W/O SUN ROOF) |
| 3-L08 | 5360 A | BODY PANELS (ROOF) (SUN ROOF) |
| 3-M08 | 5370 | BODY PANELS (FLOOR) (COUPE) |
| 3-D09 | 5370 A | BODY PANELS (FLOOR) (CONVERTIBLE) |
| 3-H09 | 5380 | FLOOR ATTACHMENTS (HOLE COVERS) |
| 3-J09 | 5390 | FLOOR ATTACHMENTS |
| 3-C10 | 5500 | DASHBOARD EQUIPMENTS |
| 3-F10 | 5520 | METER HOOD |
| 3-G10 | 5530 | SPEEDOMETER CABLE |
| 3-H10 | 5540 | METER COMPONENTS |
| 3-J10 | 5560 | DASHBOARD & RELATED PARTS |
| 3-E11 | 5570 | CONSOLE |
| 3-H11 | 5580 | VENTILATOR |
| 3-J11 | 5700 | FRONT SEATS (COUPE) |
| 3-E13 | 5700A | FRONT SEATS (CONVERTIBLE) |
| 3-K13 | 5750 | REAR SEATS (COUPE) |
| 3-M13 | 5790 | SEAT BELTS (COUPE) |
| 3-C14 | 5790A | SEAT BELTS (CONVERTIBLE) |
| 3-D14 | 5800 | FRONT DOORS (COUPE) |
| 3-G14 | 5800A | FRONT DOORS (CONVERTIBLE) |
| 3-K14 | 5830 | FRONT DOOR MECHANISMS (COUPE) |
| 3-F15 | 5830A | FRONT DOOR MECHANISMS (CONVERTIBLE) |
| 3-J15 | 5840 | FRONT DOOR TRIMS & RELATED PARTS (COUPE) |
| 3-H16 | 5840A | FRONT DOOR TRIMS & RELATED PARTS (CONVERTIBLE) |

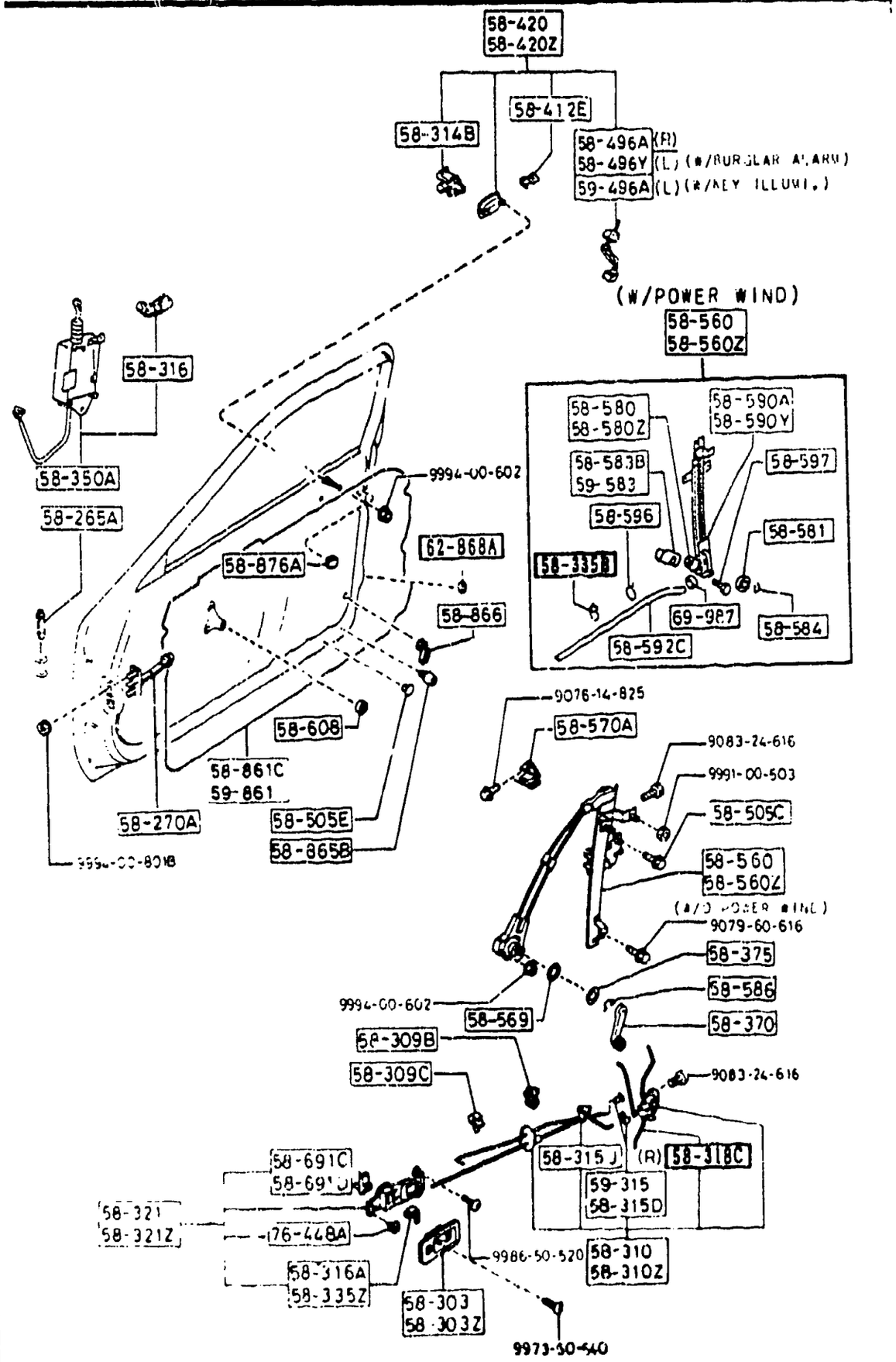


AUFA02



| PART NO. | QTY | MODEL/RESTRICTION | MODEL/RESTRICTION | MODEL/RESTRICTION | FROM-TO |
|---|---|---|---|---|---|
| 58-560Z | | REGULATOR(L),WINDOW | | | |
| FB01-59-560E | 1 | GTU, GTUS, (W/O POWER WIND.) | | | |
| FB05-59-560J | 1 | GXL, TURBO, (W/POWER WIND.) | | | |
| 58-569 | | GASKET,WINDOW REGULATOR | | | |
| B092-58-569 | 2 | GTU, GTUS, (W/O POWER WIND.) | | | -9401 |
| 58-570A | | STRIKER | | | |
| B001-58-361A | 2 | | | | |
| 58-580 | | MOTOR(R),WINDOW | | | |
| FB05-58-58X | 1 | GXL, TURBO, (W/POWER WIND.) | | | |
| 58-580Z | | MOTOR(L),WINDOW | | | |
| FB05-59-58X | 1 | GXL, TURBO, (W/POWER WIND.) | | | |
| 58-581 | | SPROCKET,REGULATOR GUIDE | | | |
| FB05-58-581 | 2 | GXL, TURBO, (W/POWER WIND.) | | | |
| 58-583B | | HOLDER(R),MOTOR-REGULATOR | | | |
| FB05-58-583A | 1 | GXL, TURBO, (W/POWER WIND.) | | | |
| 58-584 | | RING'C',SPROCKET-REG | | | |
| B094-58-584 | 2 | GXL, TURBO, (W/POWER WIND.) | | | |
| 58-586 | | RING,SNAP | | | |
| B001-58-585 | 2 | GTU, GTUS, (W/O POWER WIND.) | | | |
| 58-590A | | GUIDE(R),REG.-POWER WIND. | | | |
| FB05-58-590B | 1 | GXL, TURBO, (W/POWER WIND.) | | | |
| 58-590Y | | GUIDE(L),REG.-POWER WIND. | | | |
| FB05-59-590B | 1 | GXL, TURBO, (W/POWER WIND.) | | | |

9401 FC3###-705390

CAT. AUFA02-06

1992-05

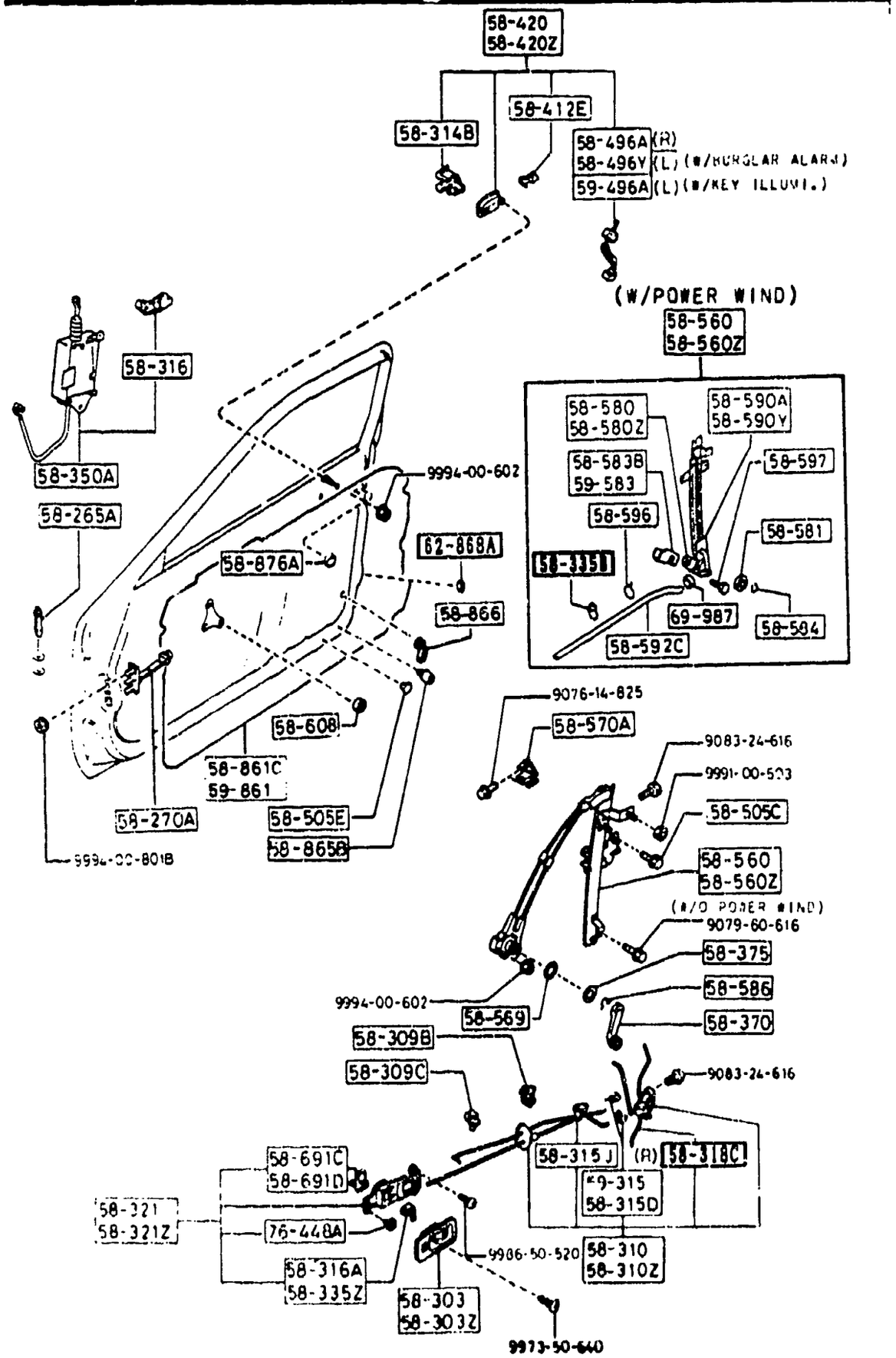


AUFA02



| PART NO. | QTY | MODEL/RESTRICTION | MODEL/RESTRICTION | MODEL/RESTRICTION | FROM-TO |
|---|---|---|---|---|---|
| 58-592C | | TUBE,REGULATOR GUIDE | | | |
| FB05-58-592B | 2 | GXL, TURBO, (W/POWER WIND.) | | | |
| 58-596 | | CLIP,TUBE-REGULATOR GUIDE | | | |
| FB05-58-596 | 4 | GXL, TURBO, (W/POWER WIND.) | | | |
| 58-597 | | BOLT,COVER-REG. GUIDE | | | |
| FB05-58-597 | 6 | GXL, TURBO, (W/POWER WIND.) | | | |
| 58-608 | | PAD | | | |
| B092-58-863A | 2 | GTU, GTUS, (W/O POWER WIND.) | | | |
| 58-691C | | KNOB (R),DOOR LOCK | | | |
| FB02-58-316A | 1 | USA, (W/BURGLAR ALARM) | | | |
| 02 | | FD8 FE1 | | | |
| 19 | | FE0 RED | | | |
| 48 | | FD9 BLUE | | | |
| 58-691D | | KNOB(L),DOOR LOCK | | | |
| FB02-59-316A | 1 | USA, (W/BURGLAR ALARM) | | | |
| 02 | | FD8 FE1 BLACK | | | |
| 19 | | FE0 RED | | | |
| 48 | | FD9 BLUE | | | |
| 58-861C | | SCREEN(R),FRONT DOOR | | | |
| FC02-58-861A | 1 | GTU, GTUS, (W/O POWER WIND.) | | | |
| FC04-58-861 | 1 | GXL, TURBO, (W/POWER WIND.) | | | |
| 58-865B | | CUSHION,RUBBER | | | |
| G067-58-873 | 2 | | | | |
| 58-866 | | CLIP | | | |
| B038-58-866 | 2 | | | | |

CAT. AUFA02-06

1992-05

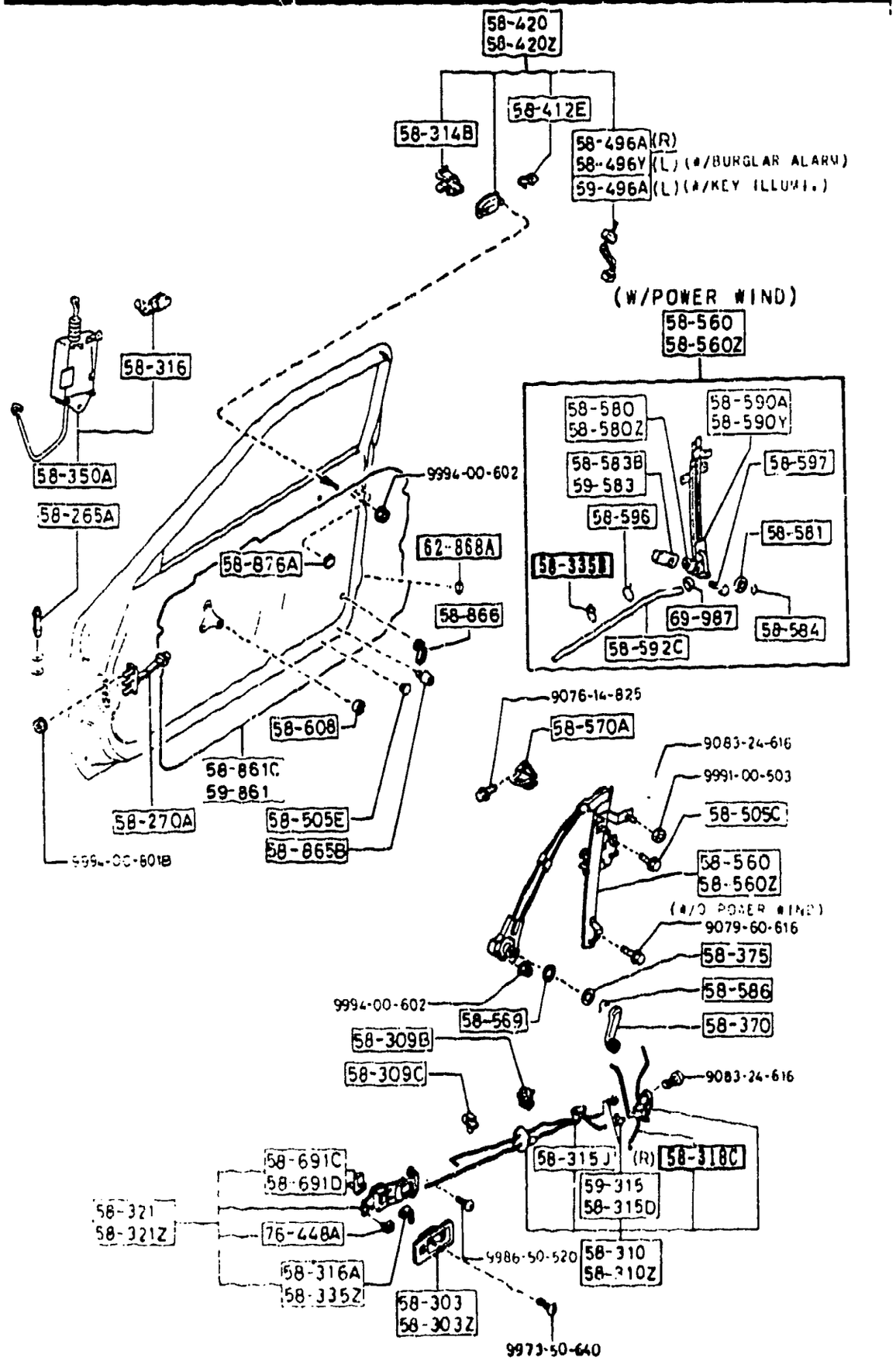


AUFA02



| PART NO. | QTY | MODEL/RESTRICTION | MODEL/RESTRICTION | MODEL/RESTRICTION | FROM-TO |
|---|---|---|---|---|---|
| 58-876A | | COVER,DOOR BODY | | | |
| FB01-58-876 | 2 | | | | |
| 59-315 | | CLIP | | | |
| G030-59-315 | 4 | GTU, GTUS, (W/O POWER WIND.) | | | |
| | 5 | GXL, TURBO, (W/POWER WIND.) | | | |
| 59-496A | | HARNESS(L),ILLUMI.&SWITCH | | | |
| FB06-59-496 | 1 | GXL, TURBO, (W/KEY ILLUMI.) | | | |
| 59-583 | | HOLDER(L),MOTER-REGULATOR | | | |
| FB05-59-583A | 1 | GXL, TURBO, (W/POWER WIND.) | | | |
| 59-861 | | SCREEN(L),FRONT DOOR | | | |
| FC02-59-861A | 1 | GTU, GTUS, (W/O POWER WIND.) | | | |
| FC04-59-861 | 1 | GXL, TURBO, (W/POWER WIND.) | | | |
| 62-868A | | COVER,HOLE-LIFT GATE | | | |
| 8499-62-868 | 2 | | | | |
| 69-987 | | BAND | | | |
| B094-58-593 | 2 | GXL, TURBO, (W/POWER WIND.) | | | |
| 76-448A | | CLIP | | | |
| G030-76-448 | 2 | USA, (W/BURGLAR ALARM) | | | |

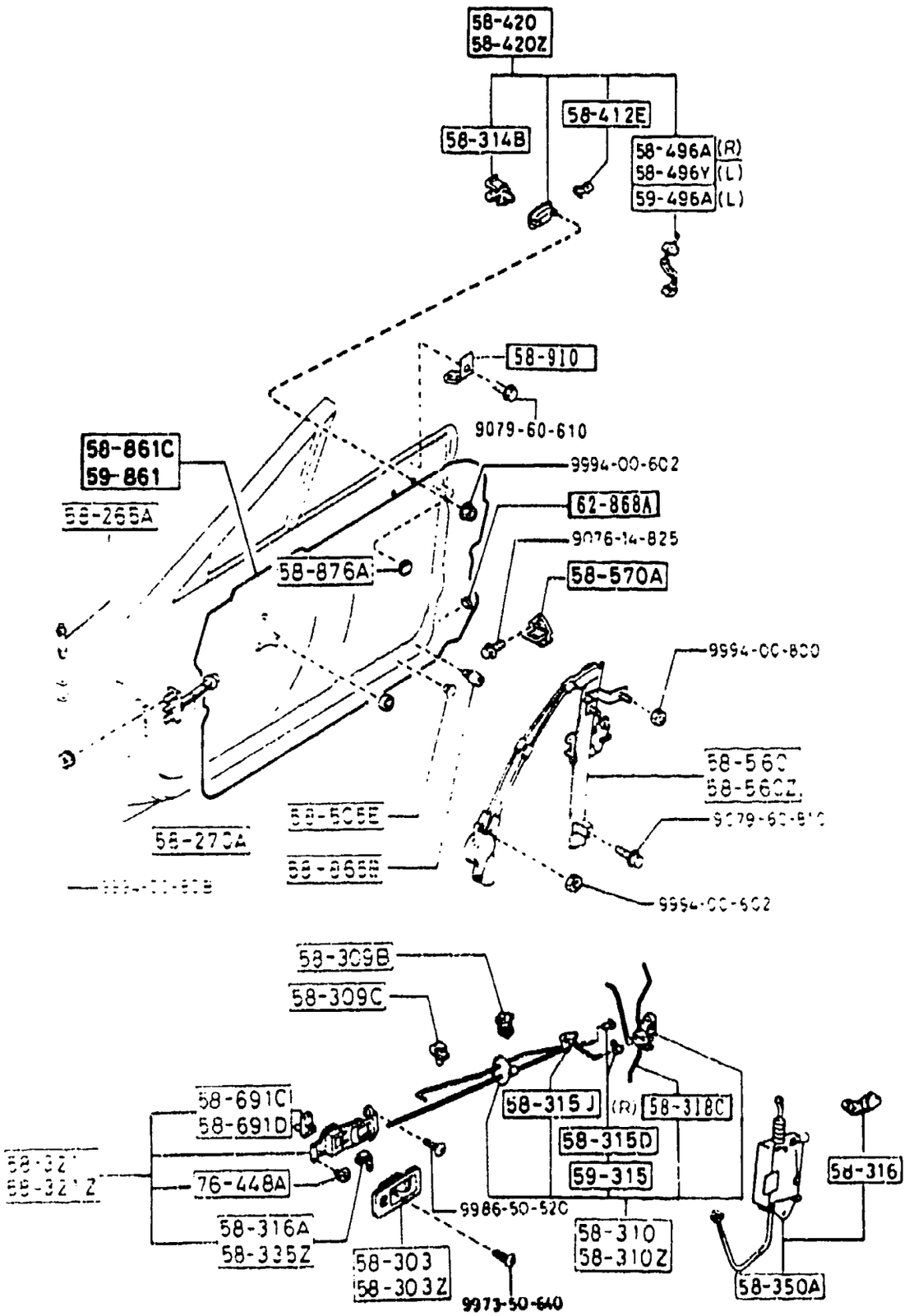


5830A -1 FRONT DOOR MECHANISMS
(CONVERTIBLE)

| PART NO. | QTY | MODEL/RESTRICTION | MODEL/RESTRICTION | MODEL/RESTRICTION | FROM-TO |
|---|---|---|---|---|---|
| 58-265A | | PIN,CHECKER | | | |
| H260-58-265C | 2 | | | | |
| 58-270A | | CHECKER,DOOR | | | |
| FB01-58-270B | 2 | | | | |
| 58-303 | | COVER(R),IN.HANDLE | | | |
| FB01-58-303B | 1 | | | | |
| 02 | | FD8 FE1 BLACK | | | |
| 48 | | FD9 BLUE | | | |
| 58-303Z | | COVER(L),IN.HANDLE | | | |
| FB01-59-303B | 1 | | | | |
| 02 | | FD8 FE1 BLACK | | | |
| 48 | | FD9 BLUE | | | |
| 58-309B | | HOLDER(UP.),ROD-IN.HANDLE | | | |
| FB02-58-309 | 2 | | | | |
| 58-309C | | HOLDER(LOW),ROD-IN.HANDLE | | | |
| FB01-58-309A | 2 | | | | |
| 58-310 | | LOCK(R),DOOR | | | |
| FB06-58-310A C (FB05-58-310A) | 1 | | | | -9216 |
| FB05-58-310A | 1 | | | | 9216- |
| 58-310Z | | LOCK(L),DOOR | | | |
| FB05-59-310A | 1 | | | | |
| 58-314B | | JOINT | | | |
| H043-72-411 | 2 | | | | |
| 58-315D | | CLIP (R) | | | |
| G030-58-315 | 5 | | | | |
| 58-315J | | CLIP | | | |
| H001-58-315 | 2 | | | | |
| 58-316 | | CLIP | | | |

FB06-58-310A 9216 FC3####-703396
C FB05-58-310A
G030-58-315
FB05-58-318

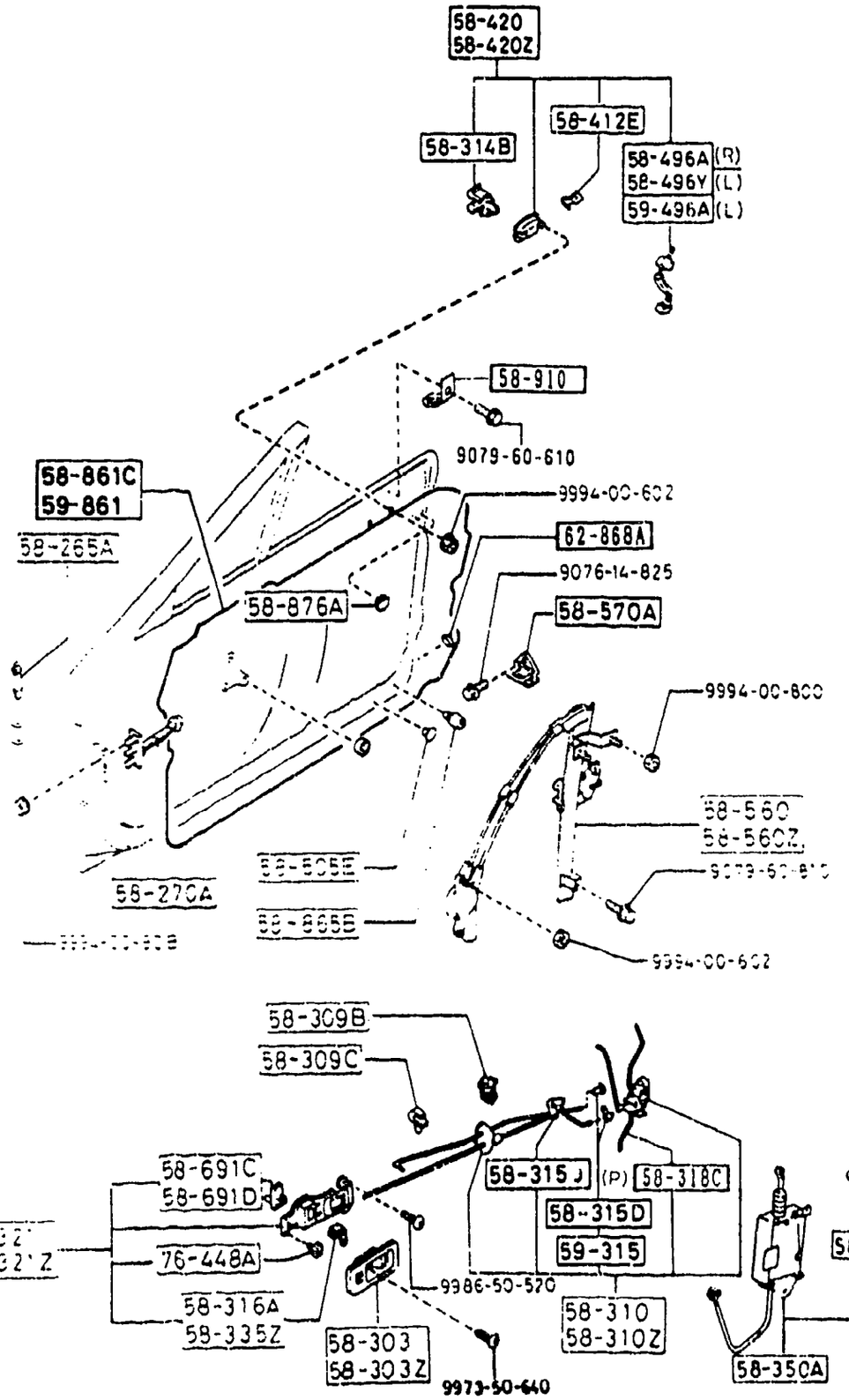




| PART NO. | QTY | MODEL/RESTRICTION | MODEL/RESTRICTION | MODEL/RESTRICTION | FROM-TO |
|---|---|---|---|---|---|
| CONT'D | | | | | |
| B093-58-351 | 1 | | | | |
| +----------+ | | | | | |
| \| 58-316A \| | | CLIP | | | |
| +----------+ | | | | | |
| B001-59-335 | 1 | | | | |
| +----------+ | | | | | |
| \| 58-318C \| | | ROD(R),DOOR LOCK-POWER | | | |
| +----------+ | | | | | |
| FB05-58-318 | 1 | | | | 9216- |
| +----------+ | | | | | |
| \| 58-321 \| | | HANDLE(R),INNER | | | |
| +----------+ | | | | | |
| FB02-58-330A | 1 | | | | |
| 02 | | FD8 FE1 BLACK | | | |
| 48 | | FD9 BLUE | | | |
| +----------+ | | | | | |
| \| 58-321Z \| | | HANDLE(L),INNER | | | |
| +----------+ | | | | | |
| FB02-59-330A | 1 | | | | |
| 02 | | FD8 FE1 BLACK | | | |
| 48 | | FD9 BLUE | | | |
| +----------+ | | | | | |
| \| 58-335Z \| | | CLIP(L),INNER HANDLE | | | |
| +----------+ | | | | | |
| FB01-58-335 | 1 | | | | |
| +----------+ | | | | | |
| \| 58-350A \| | | ACTUATOR(R),POWER LOCK | | | |
| +----------+ | | | | | |
| FB06-58-350A | 1 | | | | |
| +----------+ | | | | | |
| \| 58-412E \| | | CLIP,HARNESS-OUT. HANDLE | | | |
| +----------+ | | | | | |
| FB01-58-412 | 2 | | | | |
| +----------+ | | | | | |
| \| 58-420 \| | | HANDLE(R),OUT. | | | |
| +----------+ | | | | | |
| FB02-58-410B | 1 | | | | |
| PZ | | PZ BRILLIANT BLACK | | | |
| SQ | | SQ BLAZE RED | | | |
| UC | | UC CRYSTAL WHITE | | | |
| WY | | WY NOBLE WHITE | | | |
| 1F | | 1F WINNING SILVER M. | | | |
| 3G | | 3G SHADOW SILVER METALL | | | |
| 5D | | 5D HARBOR BLUE M. | | | |
| +----------+ | | | | | |
| \| 58-420Z \| | | HANDLE(L),OUT. | | | |
| +----------+ | | | | | |

9216 FC3####-703396

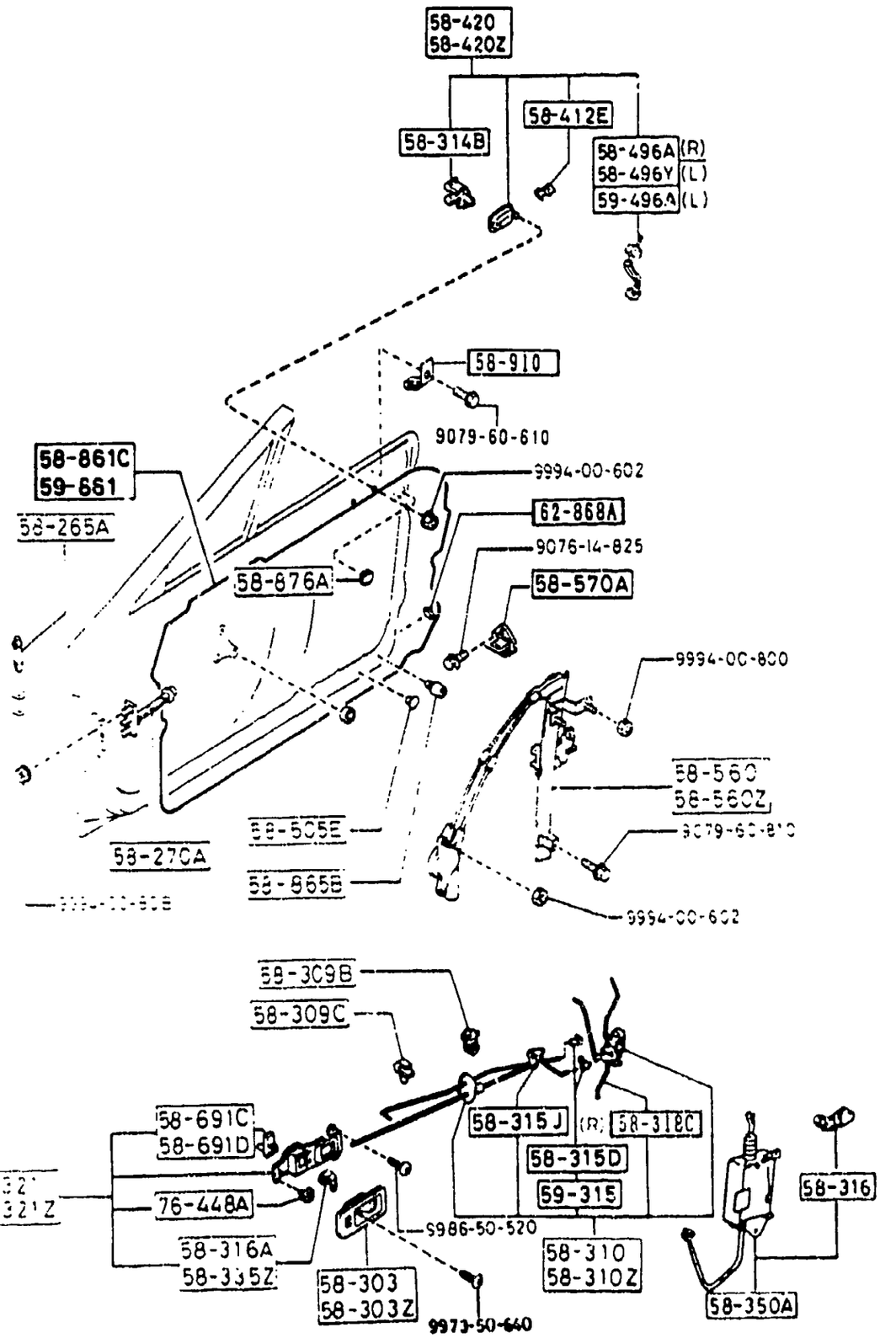




| PART NO. | QTY | MODEL/RESTRICTION | MODEL/RESTRICTION | MODEL/RESTRICTION | FROM-TO |
|---|---|---|---|---|---|
| CONT'D<br>FB06-59-410C | 1 | | | | |
| PZ | | PZ BRILLIANT BLACK | | | |
| SQ | | SQ BLAZE RED | | | |
| UC | | UC CRYSTAL WHITE | | | |
| WY | | WY NOBLE WHITE | | | |
| 1F | | 1F WINNING SILVER M. | | | |
| 3G | | 3G<br>SHADOW SILVER METALL | | | |
| 5D | | 5D HARBOR BLUE M. | | | |
| \| 58-496A \| | | SWITCH(R),LOCK-CYLIN<br>DER | | | |
| FB03-58-496 | 1 | | | | |
| \| 58-496Y \| | | SWITCH(L),LOCK-CYLIN<br>DER | | | |
| FB03-59-496 | 1 | | | | |
| \| 58-505E \| | | CAP | | | |
| B092-58-355 | 1 | | | | |
| \| 58-560 \| | | REGULATOR(R),WINDOW | | | |
| FB67-58-560C<br>AN(FB67-58-560E) | 1 | | | | -0319 |
| *FB67-58-560E | 1 | | | | 0319- |
| \| 58-560Z \| | | REGULATOR(L),WINDOW | | | |
| FB67-59-560C<br>AN(FB67-59-560E) | 1 | | | | -0319 |
| *FB67-59-560E | 1 | | | | 0319- |
| \| 58-570A \| | | STRIKER | | | |
| B001-58-361A | 2 | | | | |
| \| 58-691C \| | | KNOB (R),DOOR LOCK | | | |
| FB02-58-316A | 1 | | | | |
| 02 | | FD8 FE1 | | | |
| 48 | | FD9 BLUE | | | |
| \| 58-691D \| | | KNOB(L),DOOR LOCK | | | |
| FB02-59-316A | 1 | | | | |
| 02 | | FD8 FE1 BLACK | | | |

0319 FC3####-806556

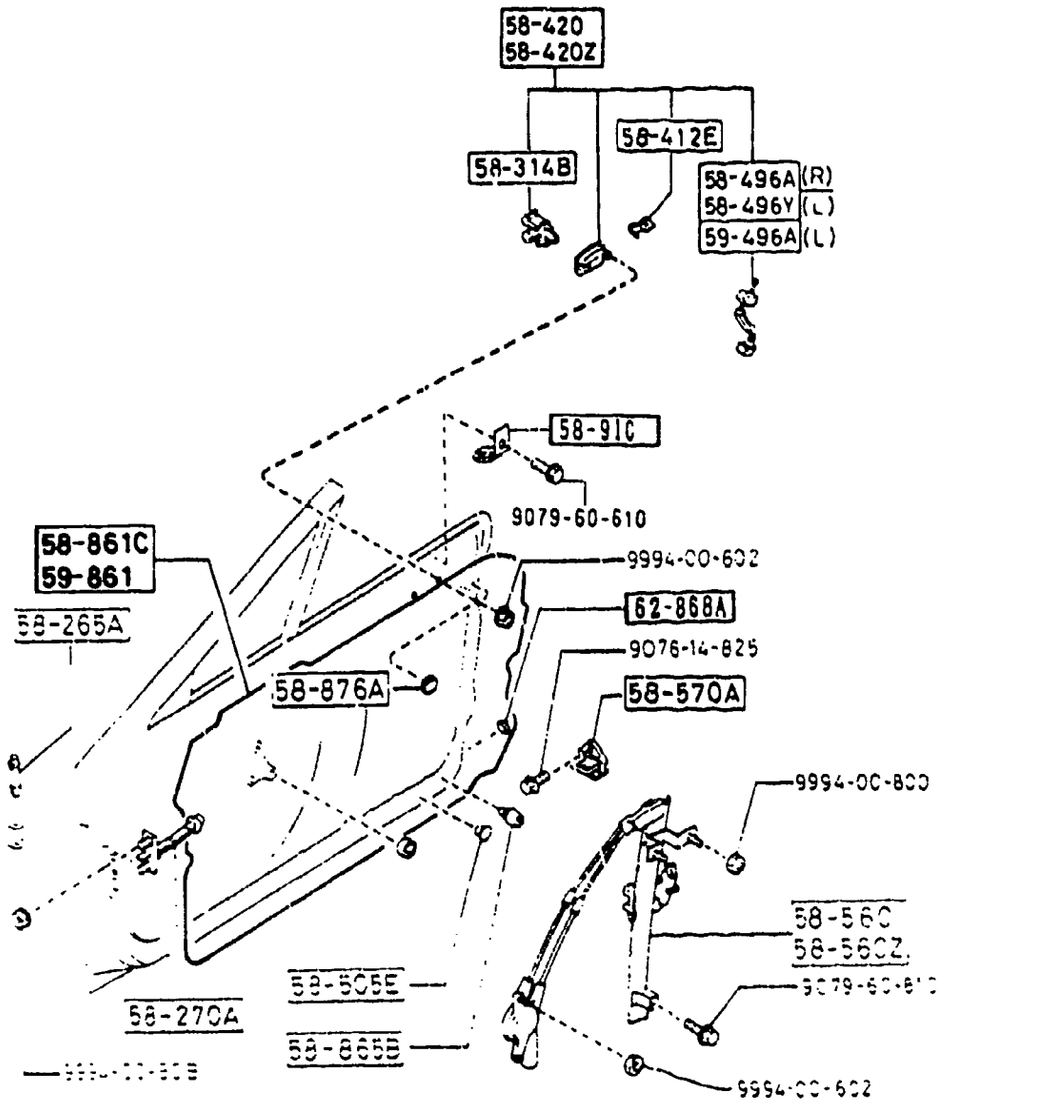


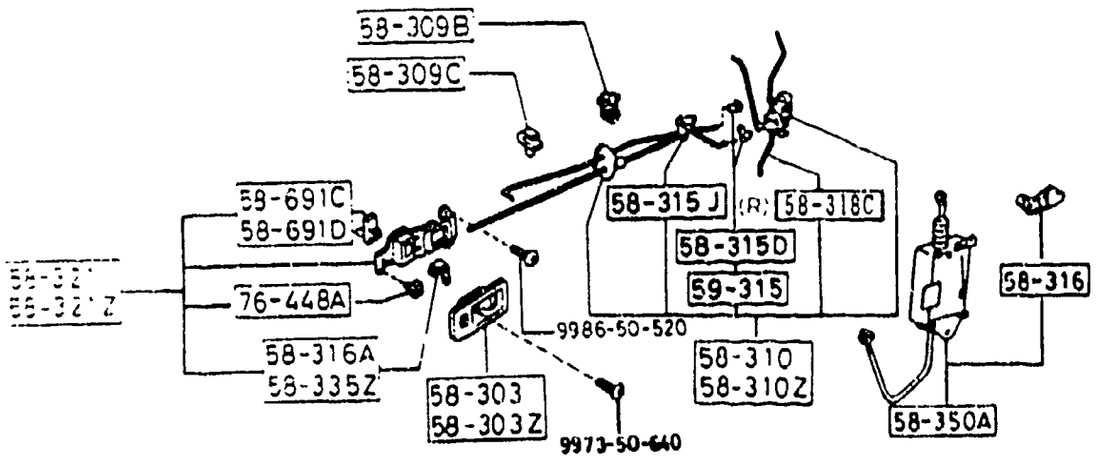






| PART NO. | QTY | MODEL/RESTRICTION | MODEL/RESTRICTION | MODEL/RESTRICTION | FROM-TO |
|---|---|---|---|---|---|
| CONT'D | | | | | |
| 48 | | FD9 BLUE | | | |
| 58-861C | | SCREEN(R),FRONT DOOR | | | |
| FB70-58-861 | 1 | | | | |
| 58-865B | | CUSHION,RUBBER | | | |
| G067-58-873 | 2 | | | | |
| 58-876A | | COVER,DOOR BODY | | | |
| FB01-58-876 | 2 | | | | |
| 58-910 | | STOPPER,GLASS | | | |
| H272-58-911 | 2 | | | | |
| 59-315 | | CLIP | | | |
| G030-59-315 | 5 | | | | |
| 59-496A | | HARNESS(L),ILLUMI.&SWITCH | | | |
| FB06-59-496 | 1 | | | | |
| 59-861 | | SCREEN(L),FRONT DOOR | | | |
| FB70-59-861 | 1 | | | | |
| 62-868A | | COVER,HOLE-LIFT GATE | | | |
| B499-62-868 | 2 | | | | |
| 76-448A | | CLIP | | | |
| G030-76-448 | 2 | | | | |

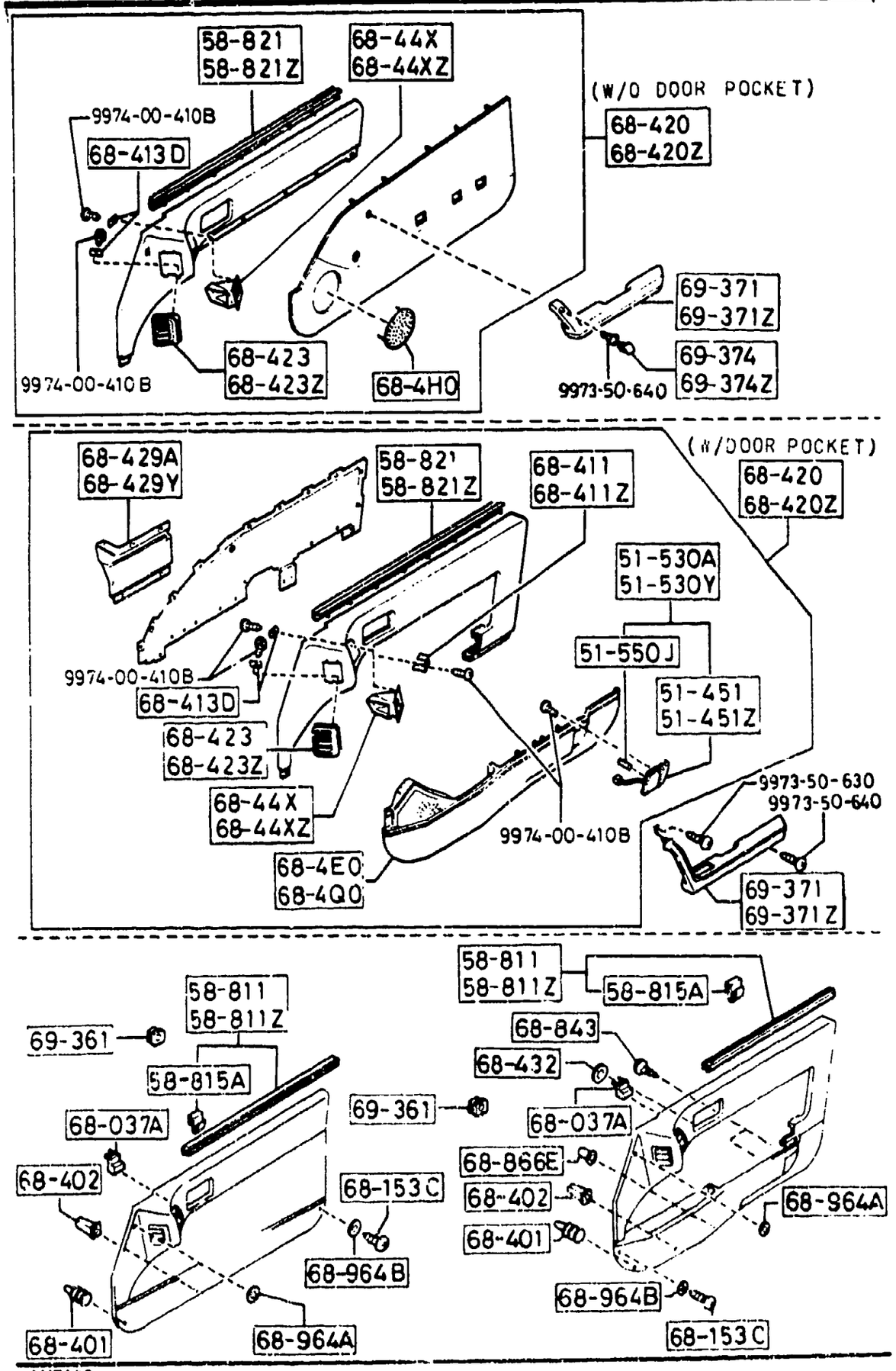


AUFA02



| PART NO. | QTY | MODEL/RESTRICTION | MODEL/RESTRICTION | MODEL/RESTRICTION | FROM-TO |
|---|---|---|---|---|---|
| 51-451 | | LENS(R),COURTESY LAMP | | | |
| FB05-51-531 | 1 | GXL, TURBO, (W/COURTESY LAMP) | | | |
| 51-451Z | | LENS(L),COURTESY LAMP | | | |
| FB05-51-591 | 1 | GXL, TURBO, (W/COURTESY LAMP) | | | |
| 51-530A | | LAMP(R),COURTESY-DR TRIM | | | |
| FB05-51-530 | 1 | GXL, TURBO, (W/COURTESY LAMP) | | | |
| 51-530Y | | LAMP(L),COURTESY-DR TRIM | | | |
| FB05-51-590 | 1 | GXL, TURBO, (W/COURTESY LAMP) | | | |
| 51-550J | | BULB | | | |
| 99701-6040 | 2 | 12V 3.8W GXL, TURBO, (W/COURTESY LAMP) | | | |
| 58-811 | | WEATHERSTRIP(R),OUT. | | | |
| FB01-58-810 | 1 | | | | |
| 58-811Z | | WEATHERSTRIP(L),OUT. | | | |
| FB01-59-810 | 1 | | | | |
| 58-815A | | CLIP,WEATHERSTRIP-OUTER | | | |
| FB01-58-815 | 12 | | | | |
| 58-821 | | WEATHERSTRIP(R),INN. | | | |
| FB01-58-821 | 1 | | | | |
| 58-821Z | | WEATHERSTRIP(L),INN. | | | |
| FB01-59-821 | 1 | | | | |
| 68-037A | | GROMMET,SCREW | | | |
| FB01-68-403 | 2 | | | | |
| 68-153C | | SCREW,TAPPING | | | |
| FB01-68-425 | 2 | | | | |
| 02 | | FD8 FE1 BLACK | | | |
| 19 | | FE0 RED | | | |

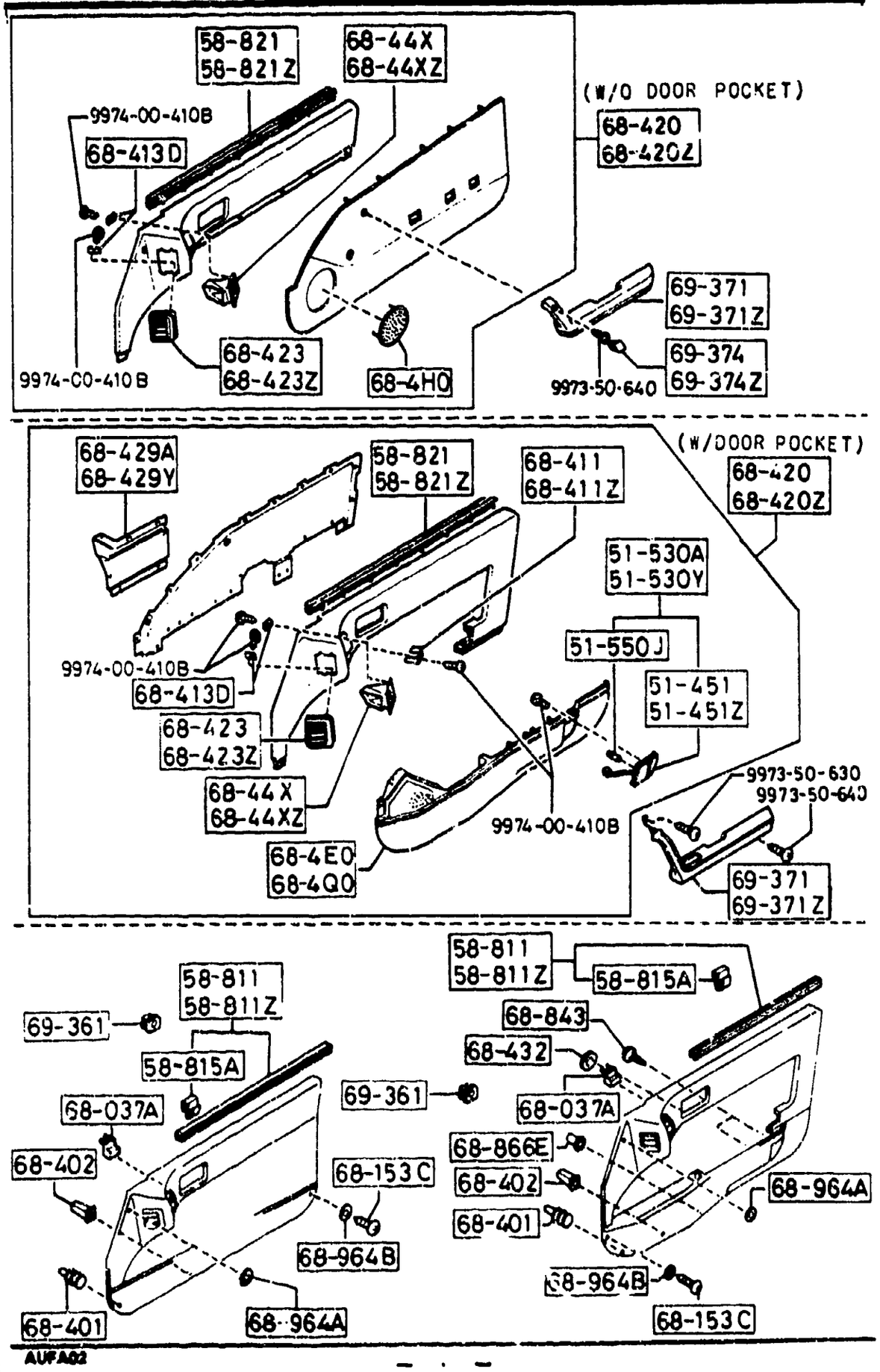


AUFA02



| PART NO. | QTY | MODEL/RESTRICTION | MODEL/RESTRICTION | MODEL/RESTRICTION | FROM-TO |
|---|---|---|---|---|---|
| CONT'D | | | | | |
| 48 | | FD9 BLUE | | | |
| +----------+ \| 68-4E0 \| +----------+ | | PLATE(R),KICK-D.TRIM | | | |
| FC04-68-4E0 A (FC04-68-4E0A) | 1 | | | | -9113 |
| 02 | | FD8 BLACK | | | |
| 19 | | FE0 RED | | | |
| 48 | | FD9 BLUE | | | |
| FC04-68-4E0A A (FC04-68-4E0B) | 1 | | | | 9113-9701 |
| 02 | | FD8 BLACK | | | |
| 19 | | FE0 RED | | | |
| 48 | | FD9 BLUE | | | |
| FC04-68-4E0B | 1 | GXL, TURBO, (W/DOOR POCKET) | | | 9701- |
| 02 | | FD8 BLACK | | | |
| 19 | | FE0 RED | | | |
| 48 | | FD9 BLUE | | | |
| +----------+ \| 68-4H0 \| +----------+ | | GRILLE,SPEAKER-FRT | | | |
| FC01-68-4H0A | 2 | GTU, GTUS, (W/O DOOR POCKET) | | | |
| 02 | | FD8 BLACK | | | |
| 19 | | FE0 RED | | | |
| 48 | | FD9 BLUE | | | |
| +----------+ \| 68-4Q0 \| +----------+ | | PLATE(L),KICK-D.TRIM | | | |
| FC04-68-4Q0 A (FC04-68-4Q0A) | 1 | | | | -9113 |
| 02 | | FD8 BLACK | | | |
| 19 | | FE0 RED | | | |
| 48 | | FD9 BLUE | | | |
| FC04-68-4Q0A A (FC04-68-4Q0B) | 1 | | | | 9113-9701 |
| 02 | | FD8 BLACK | | | |
| 19 | | FE0 RED | | | |
| 48 | | FD9 BLUE | | | |
| FC04-68-4Q0B | 1 | GXL, TURBO, (W/DOOR POCKET) | | | 9701- |

9113 FC3####-700067
9701 FC3####-709151

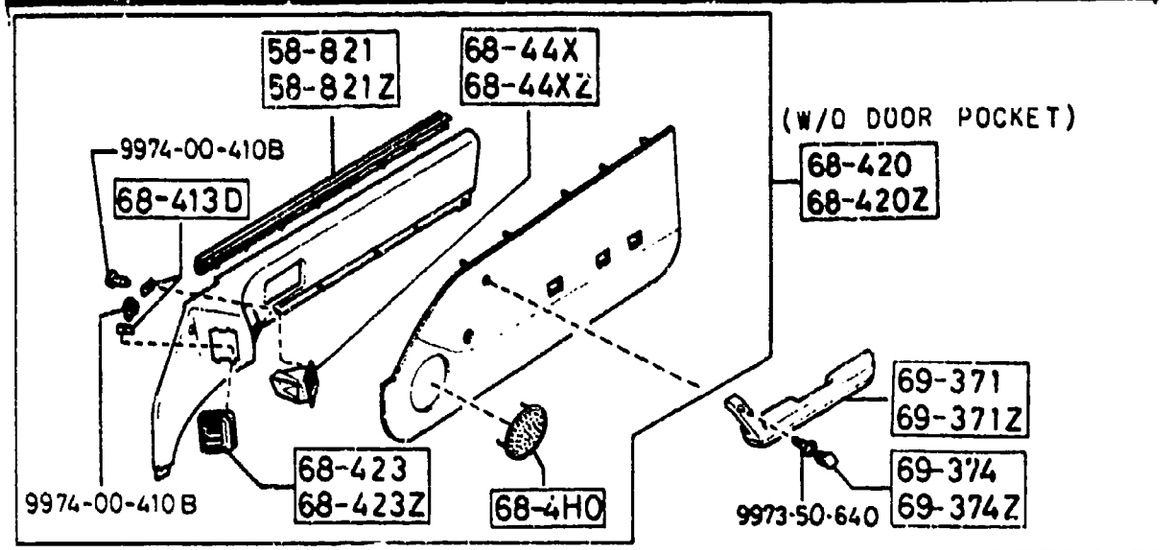


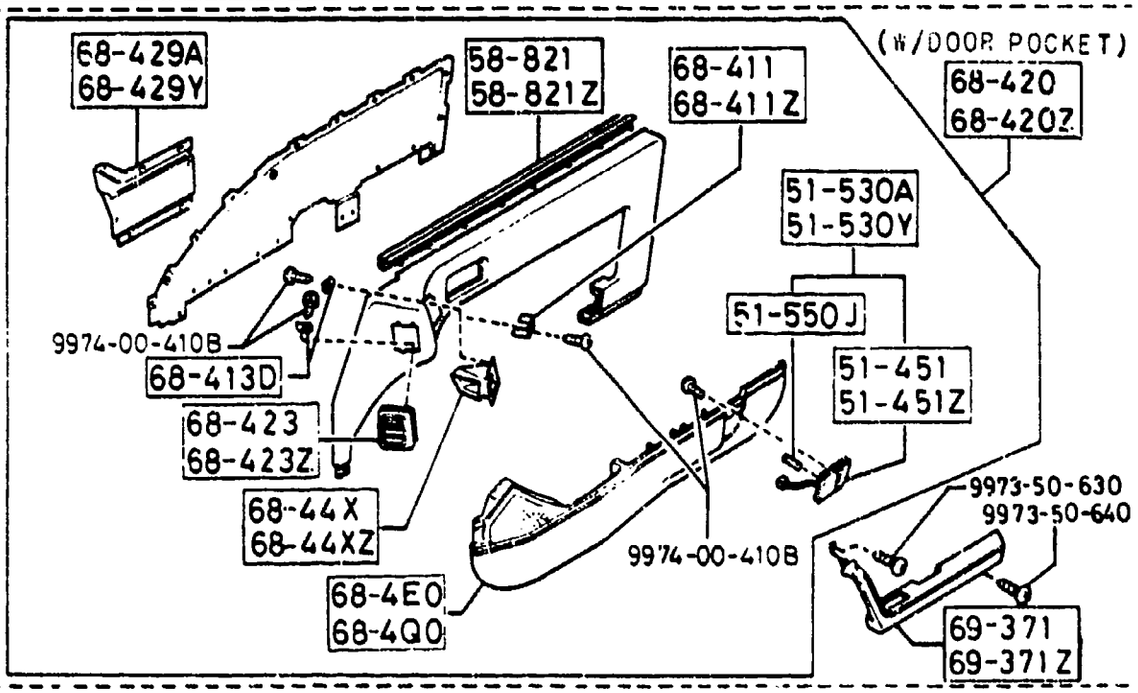


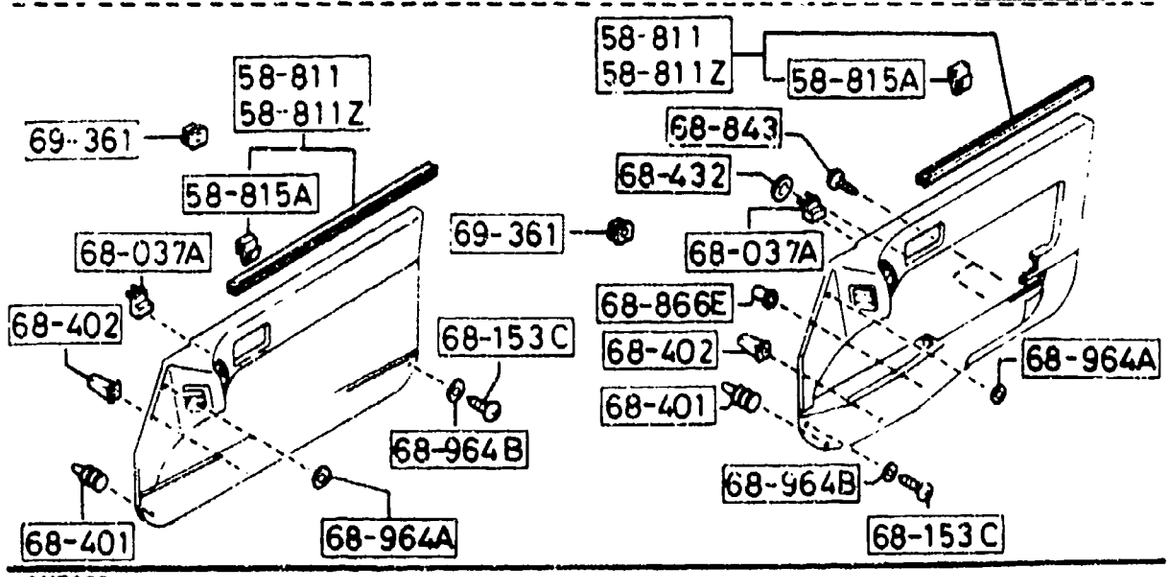


AUFA02



| PART NO. | QTY | MODEL/RESTRICTION | MODEL/RESTRICTION | MODEL/RESTRICTION | FROM-TO |
|---|---|---|---|---|---|
| CONT'D | | | | | |
| 02 | | FD8 BLACK | | | |
| 19 | | FE0 RED | | | |
| 48 | | FD9 BLUE | | | |
| +---------+ | | | | | |
| \| 68-401 \| | | FASTENER,DOOR TRIM | | | |
| +---------+ | | | | | |
| B100-68-401 | 18 | | | | |
| +---------+ | | | | | |
| \| 68-402 \| | | GROMMET,SCREW | | | |
| +---------+ | | | | | |
| FA54-68-402 | 8 | | | | |
| +---------+ | | | | | |
| \| 68-411 \| | | BRKT NO.1(R),GRILLE-TRIM | | | |
| +---------+ | | | | | |
| FB01-68-414 | 1 | GXL, TURBO, (W/DOOR POCKET) | | | |
| +---------+ | | | | | |
| \| 68-411Z \| | | BRKT NO.1(L),GRILLE-TRIM | | | |
| +---------+ | | | | | |
| FB01-68-415 | 1 | GXL, TURBO, (W/DOOR POCKET) | | | |
| +---------+ | | | | | |
| \| 68-413D \| | | WASHER | | | |
| +---------+ | | | | | |
| FB01-68-413 | 10 | | | | |
| +---------+ | | | | | |
| \| 68-420 \| | | TRIM(R),DOOR | | | |
| +---------+ | | | | | |
| FC01-68-420A | 1 | | | | -9113 |
| A (FC01-68-420B) | | | | | |
| 02 | | FD8 BLACK | | | |
| 19 | | FE0 RED | | | |
| 48 | | FD9 BLUE | | | |
| FC02-68-420A | 1 | | | | -9113 |
| A (FC02-68-420B) | | | | | |
| 02 | | FD8 BLACK | | | |
| 19 | | FE0 RED | | | |
| 48 | | FD9 BLUE | | | |
| FC04-68-420 | 1 | | | | -9113 |
| A (FC04-68-420A) | | | | | |
| 02 | | FD8 BLACK | | | |
| 19 | | FE0 RED | | | |
| 48 | | FD9 BLUE | | | |
| FC06-68-420 | 1 | | | | -9113 |
| A (FC06-68-420A) | | | | | |
| 02 | | FD8 BLACK | | | |

9113 FC3***-700067

CAT. AUFA02-06

1992-05

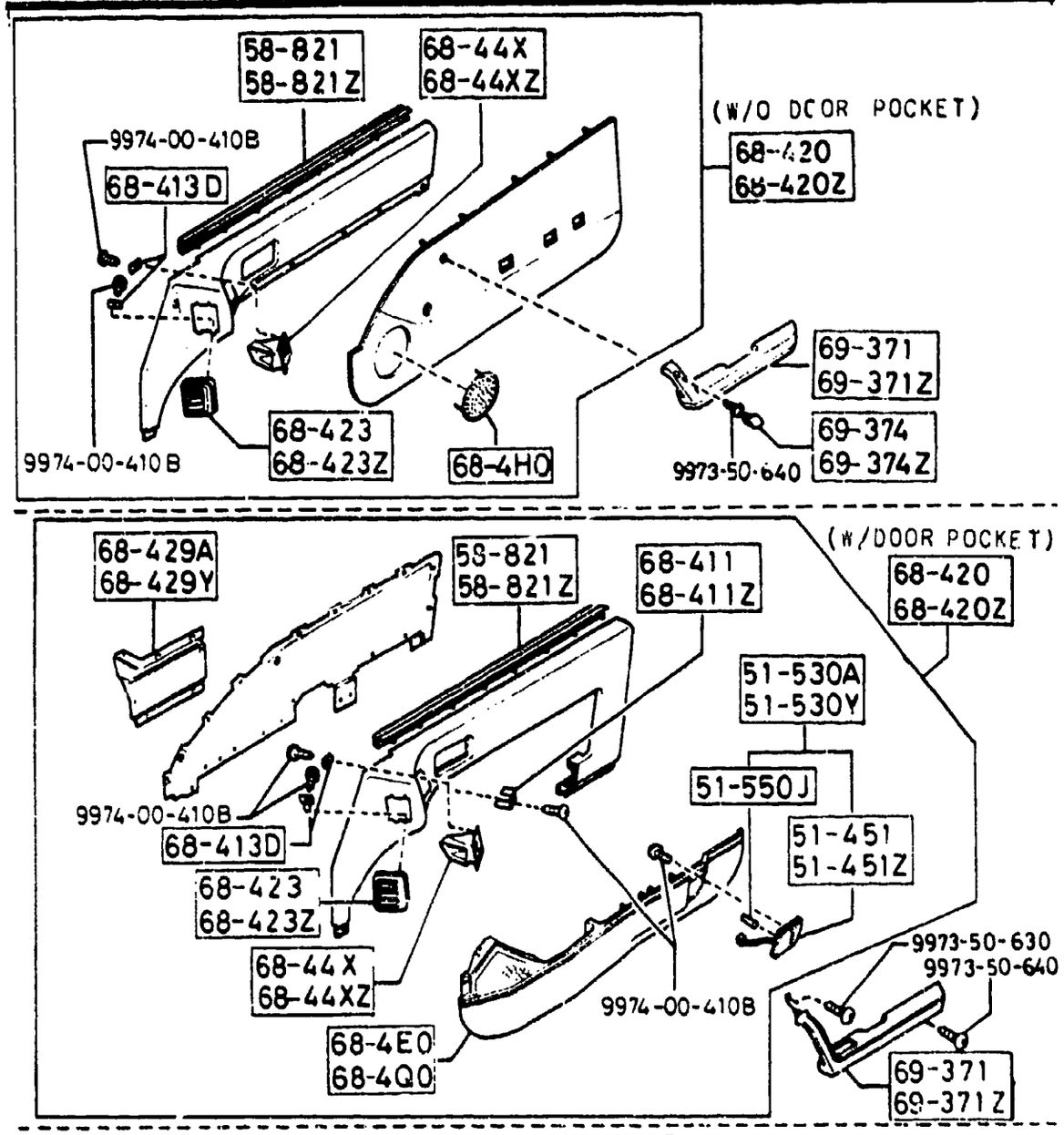


AUFA02



| PART NO. | QTY | MODEL/RESTRICTION | MODEL/RESTRICTION | MODEL/RESTRICTION | FROM-TO |
|---|---|---|---|---|---|
| CONT'D | | | | | |
| 19 | | FE0 RED | | | |
| 48 | | FD9 BLUE | | | |
| FC17-68-420 A (FC17-68-420A) | 1 | | | | -9113 |
| 02 | | FD8 BLACK | | | |
| 48 | | FD9 BLUE | | | |
| FC01-68-420B A (FC01-68-420C) | 1 | | | | 9113-9116 |
| 02 | | FD8 BLACK | | | |
| 19 | | FE0 RED | | | |
| 48 | | FD9 BLUE | | | |
| FC02-68-420B A (FC02-68-420C) | 1 | | | | 9113-9116 |
| 02 | | FD8 BLACK | | | |
| 19 | | FE0 RED | | | |
| 48 | | FD9 BLUE | | | |
| FC04-68-420A A (FC04-68-420B) | 1 | | | | 9113-9307 |
| 02 | | FD8 BLACK | | | |
| 19 | | FE0 RED | | | |
| 48 | | FD9 BLUE | | | |
| FC06-68-420A A (FC06-68-420B) | 1 | | | | 9113-9307 |
| 02 | | FD8 BLACK | | | |
| 19 | | FE0 RED | | | |
| 48 | | FD9 BLUE | | | |
| FC17-68-420A A (FC17-68-420B) | 1 | | | | 9113-9307 |
| 02 | | FD8 BLACK | | | |
| 48 | | FD9 BLUE | | | |
| FC01-68-420C A (FC01-68-420D) | 1 | | | | 9116-9307 |
| 02 | | FD8 BLACK | | | |
| 19 | | FE0 RED | | | |
| 48 | | FD9 BLUE | | | |
| FC02-68-420C A (FC02-68-420D) | 1 | | | | 9116-9307 |
| 02 | | FD8 BLACK | | | |

9113 FC3####-700067
9116 FC3####-700111
9307 FC3####-704476

CAT. AUFA02-06

1992-05

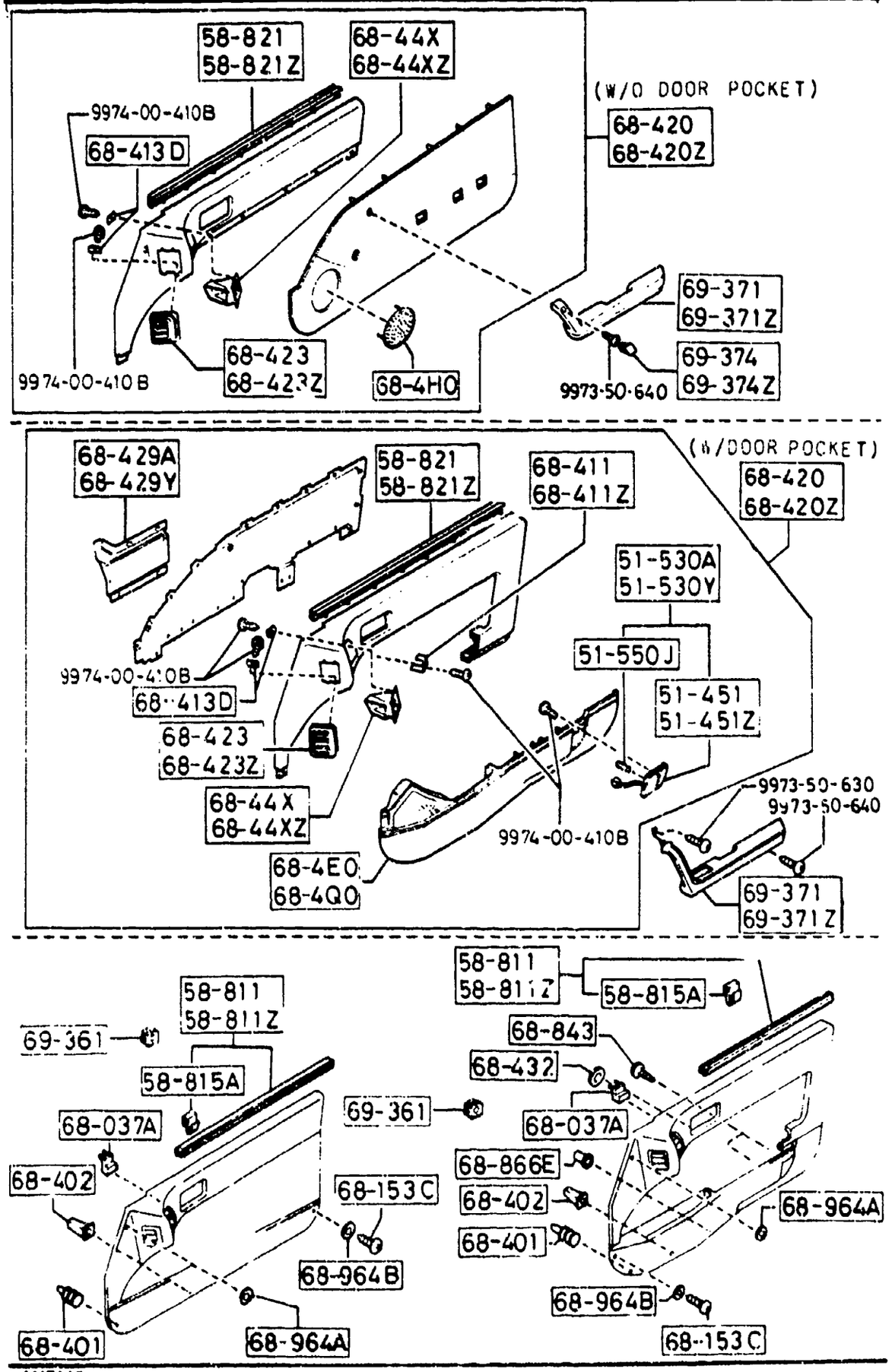


AUFA02



| PART NO. | QTY | MODEL/RESTRICTION | MODEL/RESTRICTION | MODEL/RESTRICTION | FROM TO |
|---|---|---|---|---|---|
| CONT'D | | | | | |
| 19 | | FE0 RED | | | |
| 48 | | FD9 BLUE | | | |
| FC01-68-420D | 1 | GTU, (CLOTH-'A',W/O POCKET) | | | 9307- |
| 02 | | FD8 BLACK | | | |
| 19 | | FE0 RED | | | |
| 48 | | FD9 BLUE | | | |
| FC02-68-420D | 1 | GTUS, (CLOTH-'D',W/O POCKET) | | | 9307- |
| 02 | | FD8 BLACK | | | |
| 19 | | FE0 RED | | | |
| 48 | | FD9 BLUE | | | |
| FC04-68-420B | 1 | GXL, (CLOTH-F021X,W/POCKET) | | | 9307- |
| 02 | | FL8 BLACK | | | |
| 19 | | FE0 RED | | | |
| 48 | | FD9 BLUE | | | |
| FC06-68-420B | 1 | GXL-OPT. TURBO.-OPT, (LEATHER,W/POCKET) | | | 9307- |
| 02 | | FD8 BLACK | | | |
| * 19 | | FE0 RED | | | |
| 48 | | FD9 BLUE | | | |
| FC17-68-420B | 1 | TURBO, (CLOTH-F024X,W/POCKET) | | | 9307- |
| 02 | | FD8 BLACK | | | |
| 48 | | FD9 BLUE | | | |
| +---------+ | | | | | |
| \| 68-420Z \| | | TRIM(L),DOOR | | | |
| +---------+ | | | | | |
| FC01-68-450A A (FC01-68-450B) | 1 | | | | -9113 |
| 02 | | FD8 BLACK | | | |
| 19 | | FE0 RED | | | |
| 48 | | FD9 BLUE | | | |
| FC02-68-450A A (FC02-68-450B) | 1 | | | | -9113 |
| 02 | | FD8 BLACK | | | |

9113 FC3***-700067
9307 FC3***-704476

CAT. AUFA02-06

1992-05

SECTION NAME INDEX (BODY)1/2

| LO.NO | SEC.NO | SECTION NAME |
|---|---|---|
| 3-C03 | 0900 | KEY SETS |
| 3-F03 | 5000 | FRONT BUMPER |
| 3-H03 | 5010 | REAR BUMPER |
| 3-J03 | 5020 | HEAD LAMP CLEANER |
| 3-L03 | 5030 | WINDOW MOULDINGS |
| 3-M03 | 5040 | BODY MOULDINGS (COUPE) |
| 3-E04 | 5060 | SIDE PROTECTORS |
| 3-I04 | 5100 | HEAD LAMPS |
| 3-J04 | 5103 | HEAD LAMP RETRACTORS |
| 3-N04 | 5105 | FRONT COMBINATION LAMPS |
| 3-G05 | 5110 | REAR COMBINATION LAMPS |
| 3-K05 | 5120 | LICENSE LAMPS |
| 3-M05 | 5125 | INTERIOR LAMPS |
| 3-N05 | 5130 | OVERHEAD CONSOLE |
| 3-C06 | 5170 | ORNAMENTS |
| 3-D06 | 5180 | COWL & EXTRACTOR GRILLES |
| 3-G06 | 5230 | BONNET |
| 3-J06 | 5260 | TRUNK LID (CONVERTIBLE) |
| 3-L06 | 5310 | BODY PANELS (FRONT) (COUPE) |
| 3-C07 | 5310 A | BODY PANELS (FRONT) (CONVERTIBLE) |
| 3-F07 | 5320 | BODY PANELS (FENDER & WHEEL APRON) |
| 3-K07 | 5330 | BODY PANELS (DASH & COWL PANEL) |
| 3-L07 | 5340 | BODY PANELS (SIDE) (COUPE) |
| 3-E08 | 5340A | BODY PANELS (SIDE) (CONVERTIBLE) |
| 3-K08 | 5360 | BODY PANELS (ROOF) (W/O SUN ROOF) |
| 3-L08 | 5360 A | BODY PANELS (ROOF) (SUN ROOF) |
| 3-M08 | 5370 | BODY PANELS (FLOOR) (COUPE) |
| 3-D09 | 5370 A | BODY PANELS (FLOOR) (CONVERTIBLE) |
| 3-H09 | 5380 | FLOOR ATTACHMENTS (HOLE COVERS) |
| 3-J09 | 5390 | FLOOR ATTACHMENTS |
| 3-C10 | 5500 | DASHBOARD EQUIPMENTS |
| 3-F10 | 5520 | METER HOOD |
| 3-G10 | 5530 | SPEEDOMETER CABLE |
| 3-H10 | 5540 | METER COMPONENTS |
| 3-J10 | 5560 | DASHBOARD & RELATED PARTS |
| 3-E11 | 5570 | CONSOLE |
| 3-H11 | 5580 | VENTILATOR |
| 3-J11 | 5700 | FRONT SEATS (COUPE) |
| 3-E13 | 5700A | FRONT SEATS (CONVERTIBLE) |
| 3-K13 | 5750 | REAR SEATS (COUPE) |
| 3-M13 | 5790 | SEAT BELTS (COUPE) |
| 3-C14 | 5790A | SEAT BELTS (CONVERTIBLE) |
| 3-D14 | 5800 | FRONT DOORS (COUPE) |
| 3-G14 | 5800A | FRONT DOORS (CONVERTIBLE) |
| 3-K14 | 5830 | FRONT DOOR MECHANISMS (COUPE) |
| 3-F15 | 5830A | FRONT DOOR MECHANISMS (CONVERTIBLE) |
| 3-J15 | 5840 | FRONT DOOR TRIMS & RELATED PARTS (COUPE) |
| 3-H16 | 5840A | FRONT DOOR TRIMS & RELATED PARTS (CONVERTIBLE) |

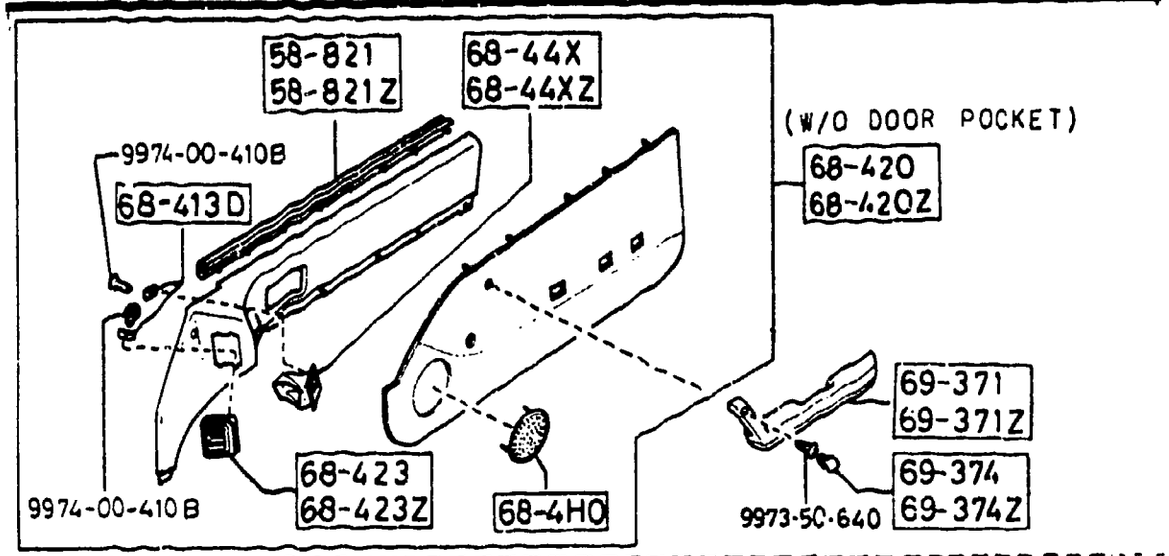


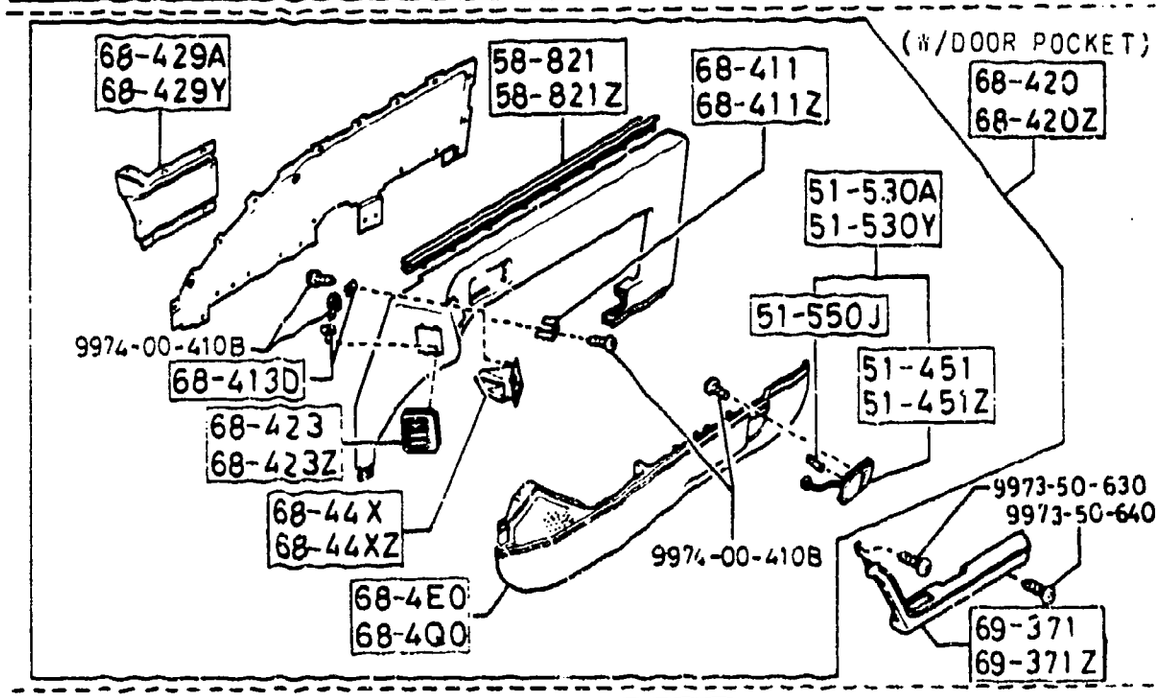


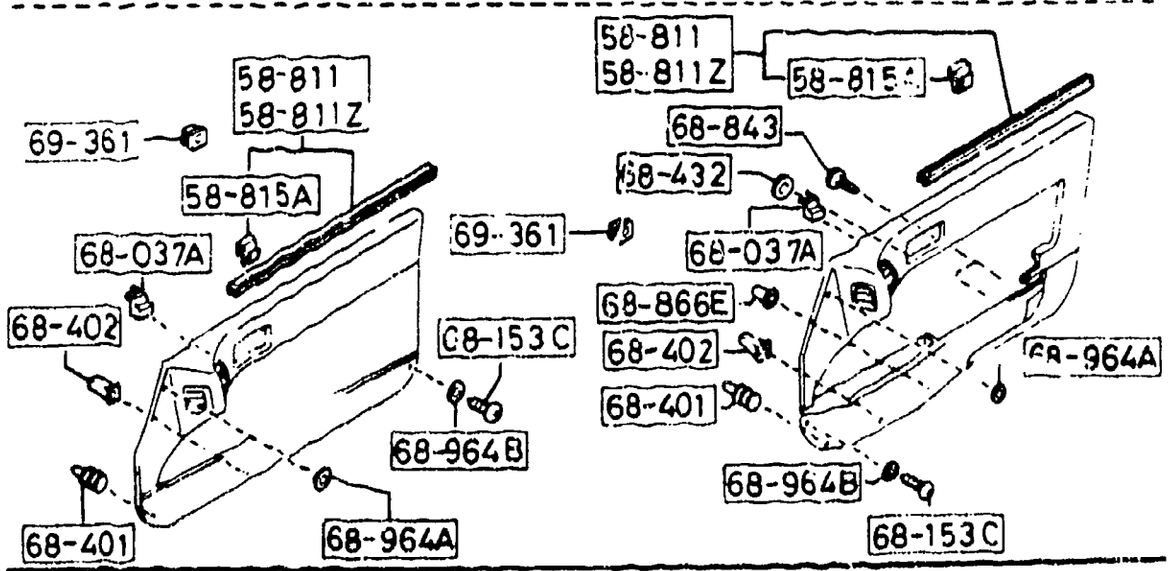


AUFA02



| PART NO. | QTY | MODEL/RESTRICTION | MODEL/RESTRICTION | MODEL/RESTRICTION | FROM-TO |
|---|---|---|---|---|---|
| CONT'D | | | | | |
| 19 | | FE0 RED | | | |
| 48 | | FD9 BLUE | | | |
| FC04-63-450 A (FC04-68-450A) | 1 | | | | -9113 |
| 02 | | FD8 BLACK | | | |
| 19 | | FE0 RED | | | |
| 48 | | FD9 BLUE | | | |
| FC06-68-450 A (FC06-68-450A) | 1 | | | | -9113 |
| 02 | | FD8 BLACK | | | |
| 19 | | FE0 RED | | | |
| 48 | | FD9 BLUE | | | |
| FC17-68-450 A (FC17-68-450A) | 1 | | | | -9113 |
| 02 | | FD8 BLACK | | | |
| 48 | | FD9 BLUE | | | |
| FC01-68-450B A (FC01-68-450C) | 1 | | | | 9113-9116 |
| 02 | | FD8 BLACK | | | |
| 19 | | FE0 RED | | | |
| 48 | | FD9 BLUE | | | |
| FC02-68-450B A (FC02-68-450C) | 1 | | | | 9113-9116 |
| 02 | | FD8 BLACK | | | |
| 19 | | FE0 RED | | | |
| 48 | | FD9 BLUE | | | |
| FC04-68-450A A (FC04-68-450B) | 1 | | | | 9113-9307 |
| 02 | | FD8 BLACK | | | |
| 19 | | FE0 RED | | | |
| 48 | | FD9 BLUE | | | |
| FC06-68-450A A (FC06-68-450B) | 1 | | | | 9113-9307 |
| 02 | | FD8 BLACK | | | |
| 19 | | FE0 RED | | | |
| 48 | | FD9 BLUE | | | |
| FC17-68-450A A (FC17-68-450B) | 1 | | | | 9113-9307 |

9113 FC3MM-700067
9116 FC3MM-700111
9307 FC3MM-704476

CAT. AUFA02-06

1992-05

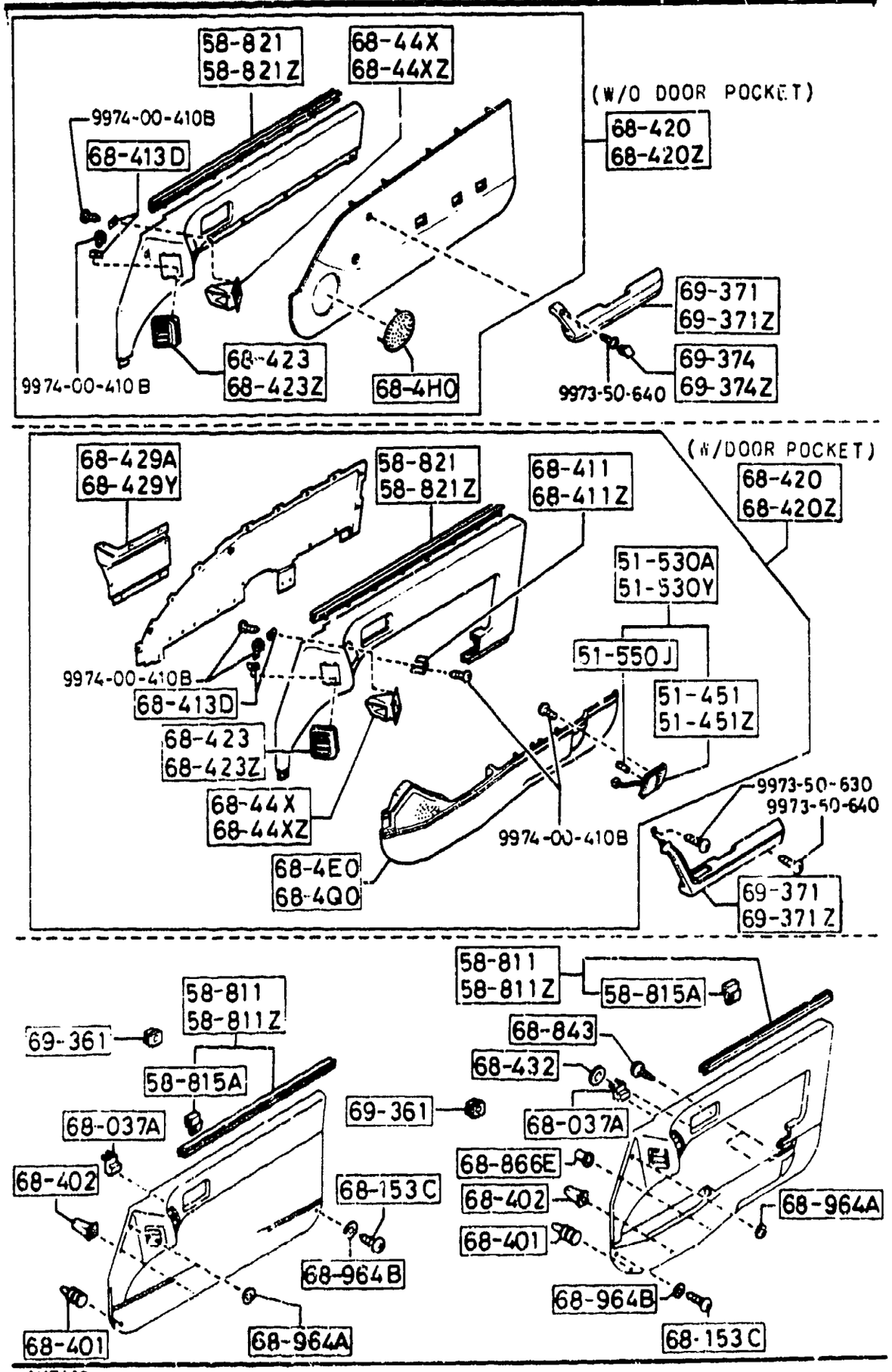


AUFA02



| PART NO. | QTY | MODEL/RESTRICTION | MODEL/RESTRICTION | MODEL/RESTRICTION | FROM-TO |
|---|---|---|---|---|---|
| CONT'D | | | | | |
| 02 | | FD8 BLACK | | | |
| 48 | | FD9 BLUE | | | |
| FC01-68-450C A (FC01-68-450D) | 1 | | | | 9116-9307 |
| 02 | | FD8 BLACK | | | |
| 19 | | FE0 RED | | | |
| 48 | | FD9 BLUE | | | |
| FC02-68-450C A (FC02-68-450D) | 1 | | | | 9116-9307 |
| 02 | | FD8 BLACK | | | |
| 19 | | FE0 RED | | | |
| 48 | | FD9 BLUE | | | |
| FC01-68-450D | 1 | GTU, (CLOTH-'A',W/O POCKET) | | | 9307- |
| 02 | | FD8 BLACK | | | |
| 19 | | FE0 RED | | | |
| 48 | | FD9 BLUE | | | |
| FC02-68-450D | 1 | GTUS, (CLOTH-'D',W/O POCKET) | | | 9307- |
| 02 | | FD8 BLACK | | | |
| 19 | | FE0 RED | | | |
| 48 | | FD9 BLUE | | | |
| FC04-68-450B | 1 | GXL, (CLOTH-F021X,W/POCKET) | | | 9307- |
| 02 | | FD8 BLACK | | | |
| 19 | | FE0 RED | | | |
| 48 | | FD9 BLUE | | | |
| FC06-68-450B | 1 | GXL-OPT, TURBO,-OPT, (LEATHER,W/POCKET) | | | 9307- |
| 02 | | FD8 BLACK | | | |
| * 19 | | FE0 RED | | | |
| 48 | | FD9 BLUE | | | |
| FC17-68-450B | 1 | TURBO, (CLOTH-F024X,W/POCKET) | | | 9307- |
| 02 | | FD8 BLACK | | | |

9116 FC3####-700111
9307 FC3####-704476

CAT. AUFA02-06

1992-05

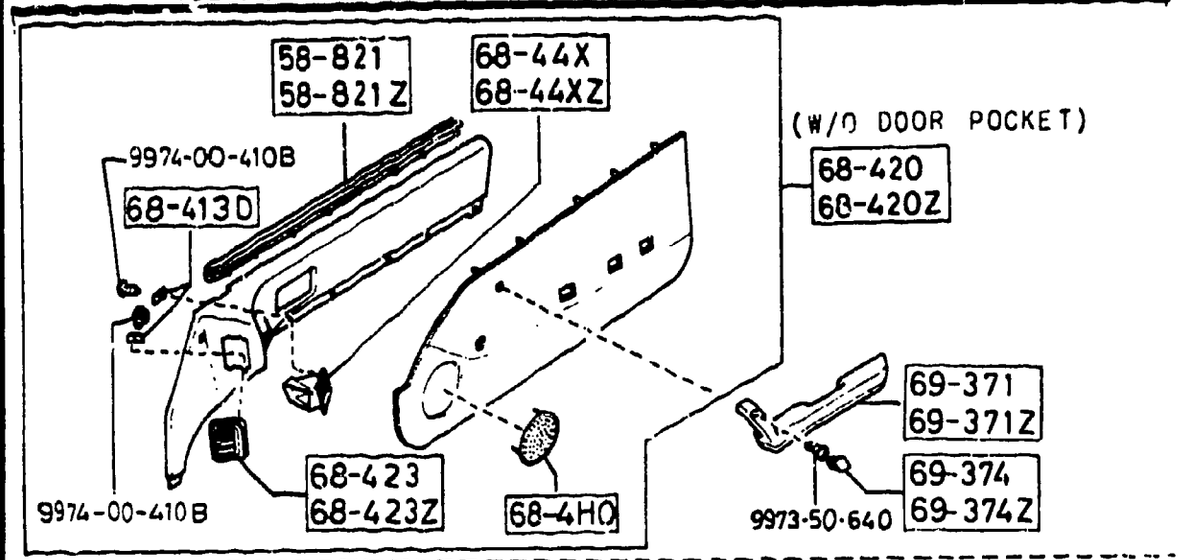


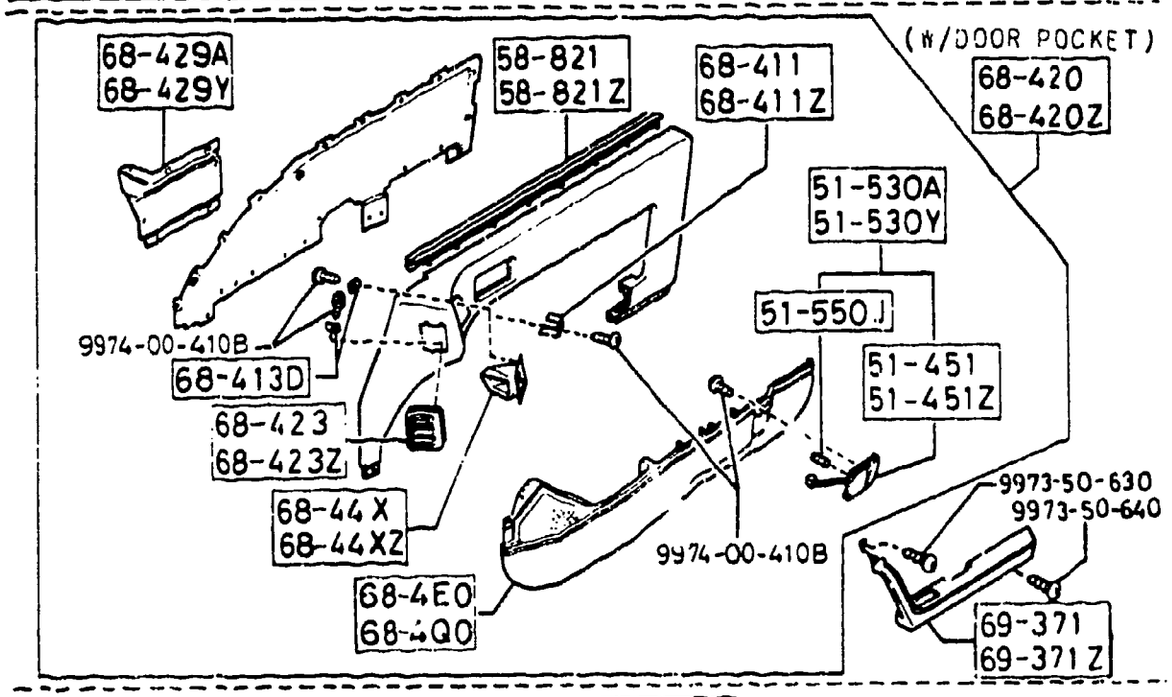


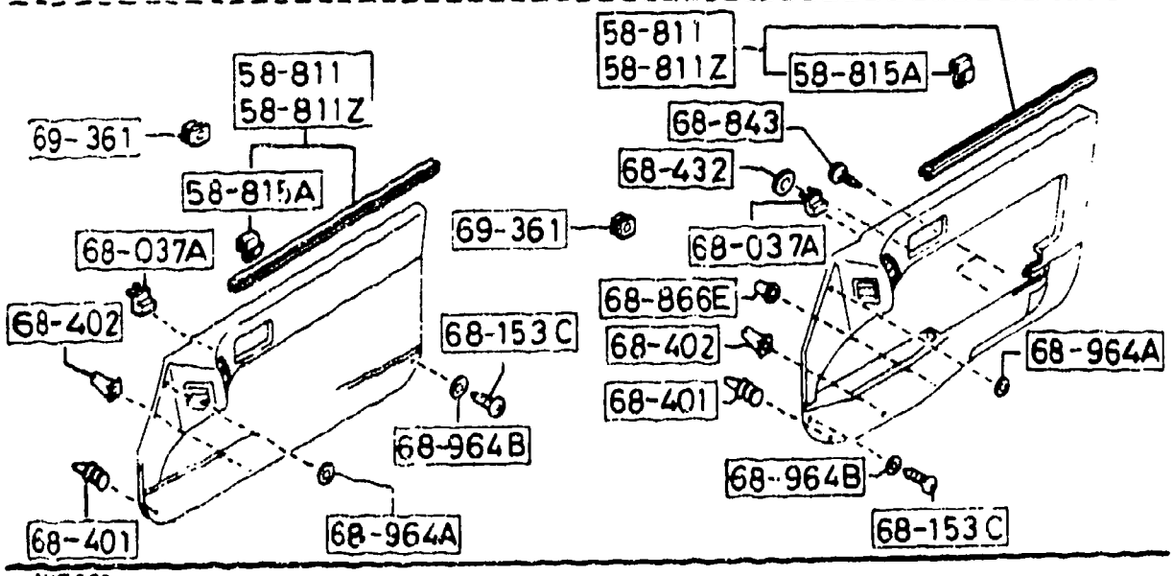


AUFA02

5840 -8 FRONT DOOR TRIMS & RELATED PARTS
(COUPE)

| PART NO. | QTY | MODEL/RESTRICTION | MODEL/RESTRICTION | MODEL/RESTRICTION | FROM-TO |
|---|---|---|---|---|---|
| CONT'D | | | | | |
| 48 | | FD9 BLUE | | | |
| +----------+ | | | | | |
| \| 68-423 \| | | COVER(R),DUST-DOOR TRIM | | | |
| +----------+ | | | | | |
| FB01-68-423 | 1 | | | | |
| 02 | | FD8 FE1 BLACK | | | |
| 19 | | FE0 RED | | | |
| 48 | | FD9 BLUE | | | |
| +----------+ | | | | | |
| \| 68-423Z \| | | COVER(L),DUST-DOOR TRIM | | | |
| +----------+ | | | | | |
| FB01-68-453 | 1 | | | | |
| 02 | | FD8 FE1 BLACK | | | |
| 19 | | FE0 RED | | | |
| 48 | | FD9 BLUE | | | |
| +----------+ | | | | | |
| \| 68-429A \| | | COVER(R),POCKET-DOOR TRIM | | | |
| +----------+ | | | | | |
| FC04-68-433 | 1 | GXL, TURBO, (W/DOOR POCKET) | | | |
| 02 | | FD8 FE1 BLACK | | | |
| 19 | | FE0 RED | | | |
| 48 | | FD9 BLUE | | | |
| +----------+ | | | | | |
| \| 68-429Y \| | | COVER(L),POCKET-DOOR TRIM | | | |
| +----------+ | | | | | |
| FC04-68-463 | 1 | GXL, TURBO, (W/DOOR POCKET) | | | |
| 02 | | FD8 FE1 BLACK | | | |
| 19 | | FE0 RED | | | |
| 48 | | FD9 BLUE | | | |
| +----------+ | | | | | |
| \| 68-432 \| | | NUT,SPEED | | | |
| +----------+ | | | | | |
| 0033-68-432 | 2 | GXL, TURBO, (W/DOOR POCKET) | | | |
| +----------+ | | | | | |
| \| 68-44X \| | | GRILLE(R),VENT.-DOOR TRIM | | | |
| +----------+ | | | | | |
| FB01-68-44X | 1 | | | | |
| 02 | | FD8 FE1 BLACK | | | |
| 19 | | FE0 RED | | | |
| 48 | | FD9 BLUE | | | |
| +----------+ | | | | | |
| \| 68-44XZ \| | | GRILLE(L),VENT.-DOOR TRIM | | | |
| +----------+ | | | | | |

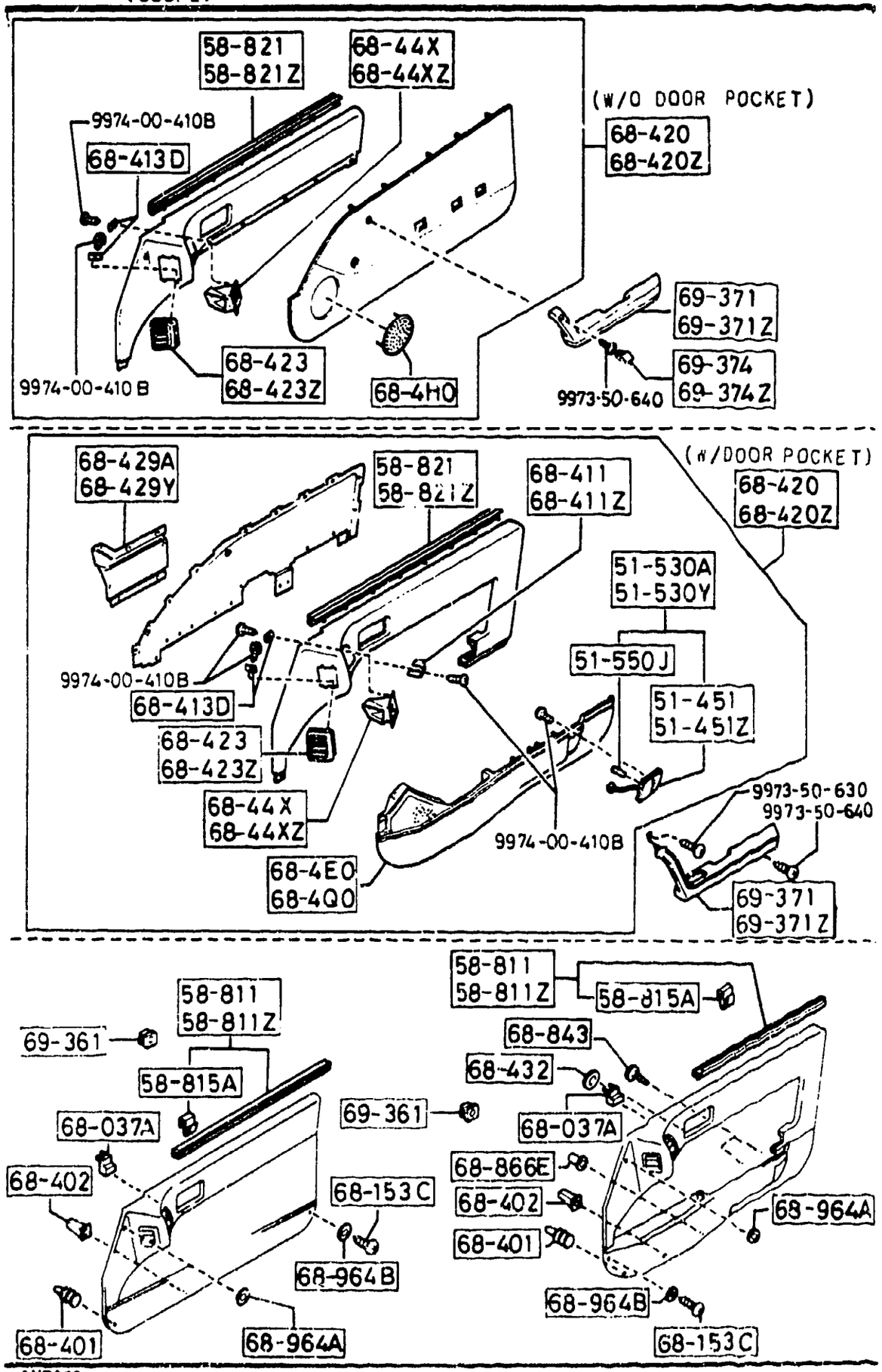


AUFA02



| PART NO. | QTY | MODEL/RESTRICTION | MODEL/RESTRICTION | MODEL/RESTRICTION | FROM-TO |
|---|---|---|---|---|---|
| CONT'D | | | | | |
| FB01-68-47X | 1 | | | | |
| 02 | | FD8 FE1 BLACK | | | |
| 19 | | FE0 RED | | | |
| 48 | | FD9 BLUE | | | |
| +----------+ | | | | | |
| \| 68-843 \| | | SCREW,TAPPING | | | |
| +----------+ | | | | | |
| UB39-68-805 | 4 | | | | |
| +----------+ | | | | | |
| \| 68-866E \| | | FASTENER,SEAL | | | |
| +----------+ | | | | | |
| 0187-58-922 | 2 | | | | |
| +----------+ | | | | | |
| \| 68-964A \| | | WASHER | | | |
| +----------+ | | | | | |
| G030-68-964C | 2 | | | | |
| 02 | | FD8 FE1 BLACK | | | |
| 19 | | FE0 RED | | | |
| 48 | | FD9 BLUE | | | |
| +----------+ | | | | | |
| \| 68-964B \| | | WASHER | | | |
| +----------+ | | | | | |
| FB01-68-427 | 2 | | | | |
| 02 | | FD8 FE1 BLACK | | | |
| 19 | | FE0 RED | | | |
| 48 | | FD9 BLUE | | | |
| +----------+ | | | | | |
| \| 69-361 \| | | GROMMET;SCREW | | | |
| +----------+ | | | | | |
| B316-69-361 | 12 | | | | |
| +----------+ | | | | | |
| \| 69-371 \| | | REST(R),ARM | | | |
| +----------+ | | | | | |
| FB01-69-370 | 1 | GXL, TURBO, (W/DOOR POCKET) | | | |
| 02 | | FD8 FE1 BLACK | | | |
| 19 | | FE0 RED | | | |
| 48 | | FD9 BLUE | | | |
| FB02-69-370 | 1 | GTU, GTUS, (W/O DOOR POCKET) | | | |
| 02 | | FD8 FE1 BLACK | | | |
| 19 | | FE0 RED | | | |
| 48 | | FD9 BLUE | | | |

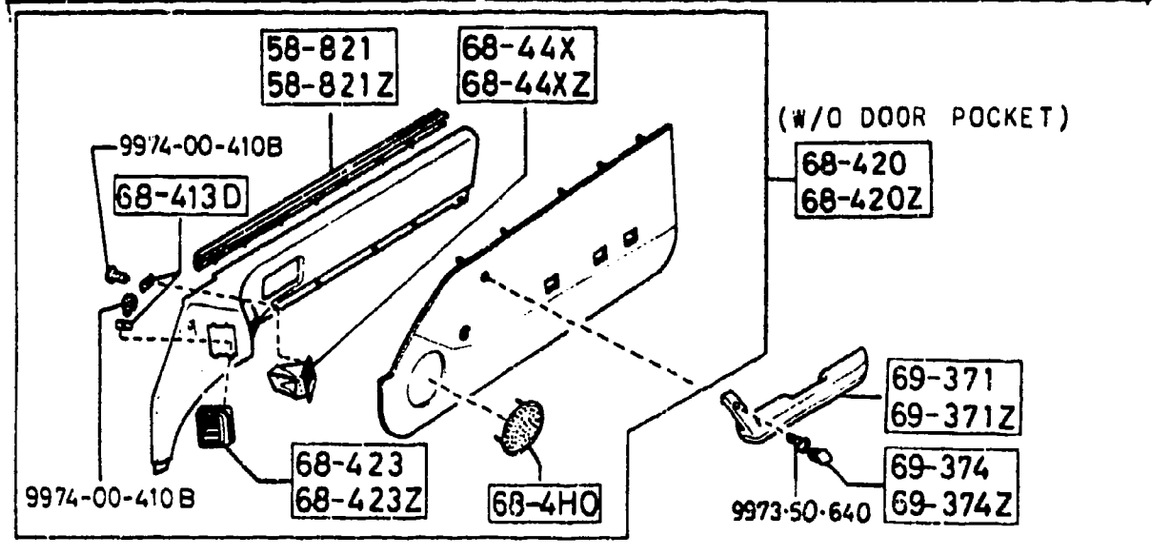


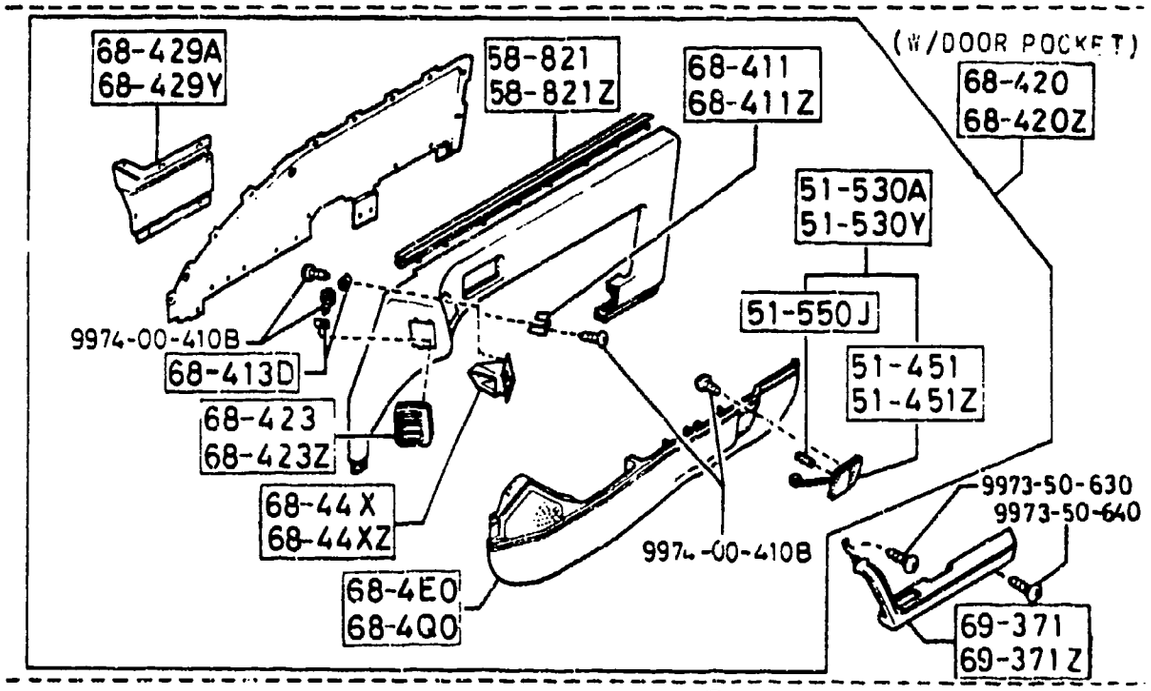


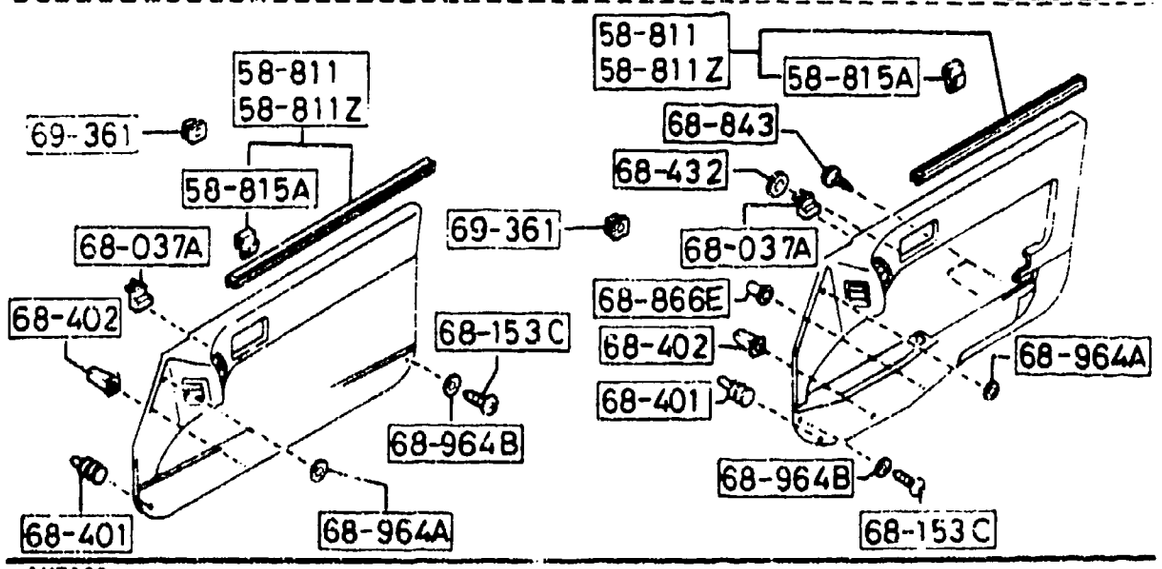


AUFA02

5840 -10* FRONT DOOR TRIMS & RELATED PARTS
(COUPE)

| PART NO. | QTY | MODEL/RESTRICTION | MODEL/RESTRICTION | MODEL/RESTRICTION | FROM-TO |
|---|---|---|---|---|---|
| 69-371Z | | REST(L),ARM | | | |
| FB01-69-390 | 1 | GXL, TURBO, (W/DOOR POCKET) | | | |
| 02 | | FD8 FE1 BLACK | | | |
| 19 | | FE0 RED | | | |
| 48 | | FD9 BLUE | | | |
| FB02-69-390 | 1 | GTU, GTUS, (W/O DOOR POCKET) | | | |
| 02 | | FD8 FE1 BLACK | | | |
| 19 | | FE0 RED | | | |
| 48 | | FD9 BLUE | | | |
| 69-374 | | CAP(R),PULL HANDLE | | | |
| BF70-69-372 | 1 | GTU, GTUS, (W/O DOOR POCKET) | | | |
| 02 | | FD8 FE1 BLACK | | | |
| 19 | | FE0 RED | | | |
| 48 | | FD9 BLUE | | | |
| 69-374Z | | CAP(L),PULL HANDLE | | | |
| BF70-69-392 | 1 | GTU, GTUS, (W/O DOOR POCKET) | | | |
| 02 | | FD8 FE1 BLACK | | | |
| 19 | | FE0 RED | | | |
| 48 | | FD9 BLUE | | | |

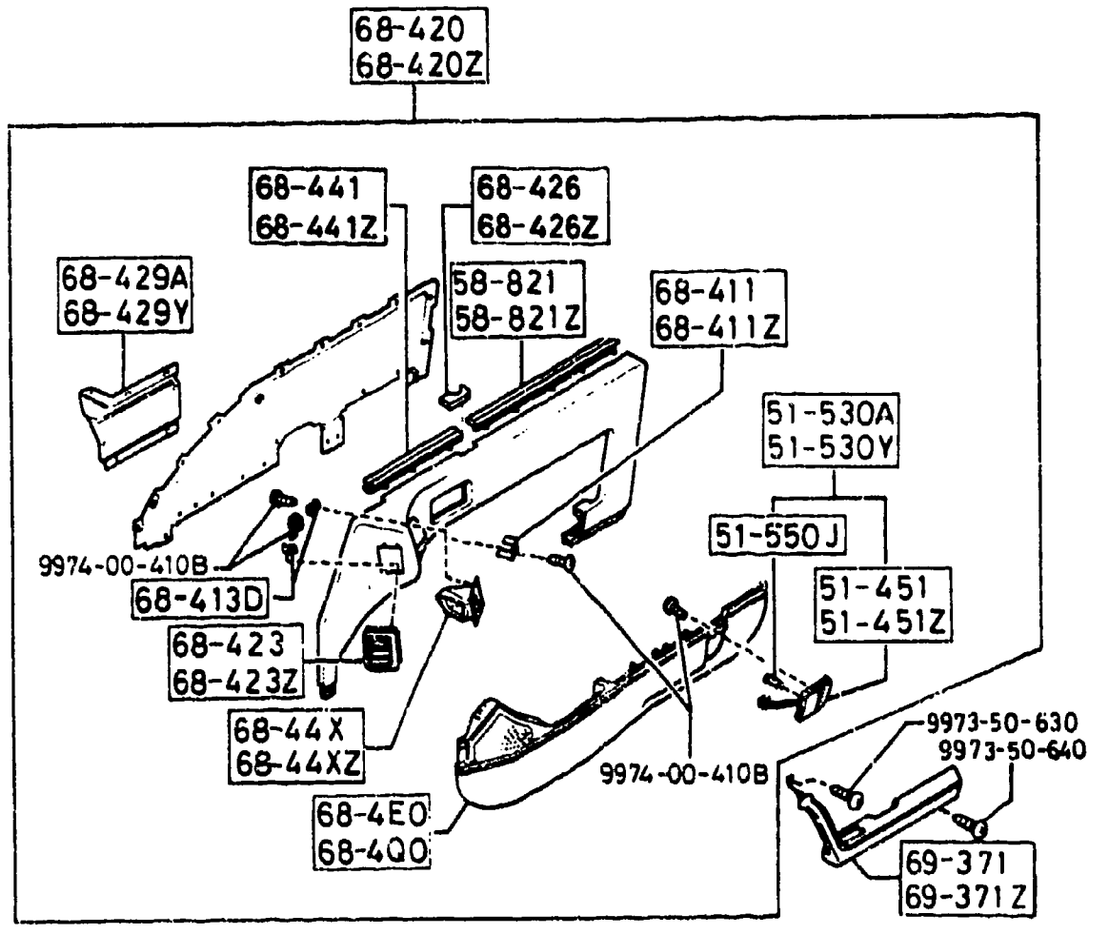


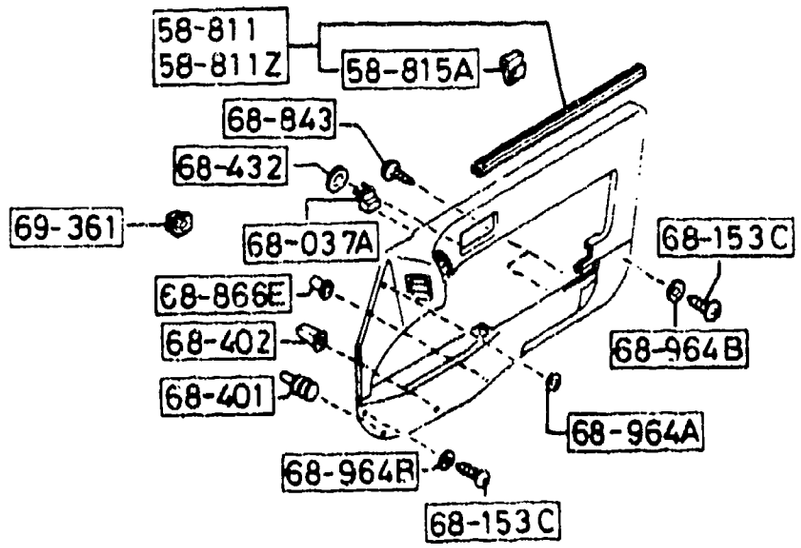


AUFA02

5840A -1 FRONT DOOR TRIMS & RELATED PARTS
(CONVERTIBLE)

| PART NO. | QTY | MODEL/RESTRICTION | MODEL/RESTRICTION | MODEL/RESTRICTION | FROM TO |
|---|---|---|---|---|---|
| 51-451 | | LENS(R),COURTESY LAMP | | | |
| FB05-51-531 | 1 | | | | |
| 51-451Z | | LENS(L),COURTESY LAMP | | | |
| FB05-51-591 | 1 | | | | |
| 51-530A | | LAMP(R),COURTESY-DR TRIM | | | |
| FB05-51-530 | 1 | | | | |
| 51-530Y | | LAMP(L),COURTESY-DR TRIM | | | |
| FB05-51-590 | 1 | | | | |
| 51-550J | | BULB | | | |
| 99701-6040 | 2 | 12V 3.8W | | | |
| 58-811 | | WEATHERSTRIP(R),OUT. | | | |
| FB67-58-810D | 1 | | | | |
| 58-811Z | | WEATHERSTRIP(L),OUT. | | | |
| FB67-5*-810D | 1 | | | | |
| 58-815A | | CLIP,WEATHERSTRIP-OUTER | | | |
| FB01-58-815 | 12 | | | | |
| 58-821 | | WEATHERSTRIP(R),INN. | | | |
| FB67-58-821 | 1 | | | | |
| 58-821Z | | WEATHERSTRIP(L),INN. | | | |
| FB67-59-821 | 1 | | | | |
| 68-037A | | GROMMET,SCREW | | | |
| FB01-68-403 | 2 | | | | |
| 68-153C | | SCREW,TAPPING | | | |
| FB01-68-425 | 4 | | | | |
| 02 | | FD8 FE1 BLACK | | | |
| 48 | | FD9 BLUE | | | |
| 68-4E0 | | PLATE(R),KICK-D.TRIM | | | |
| FC04-68-4E0 | 1 | | | | -9113 |

9113 FC3****-700067

CAT. AUFA02-06

1992-05

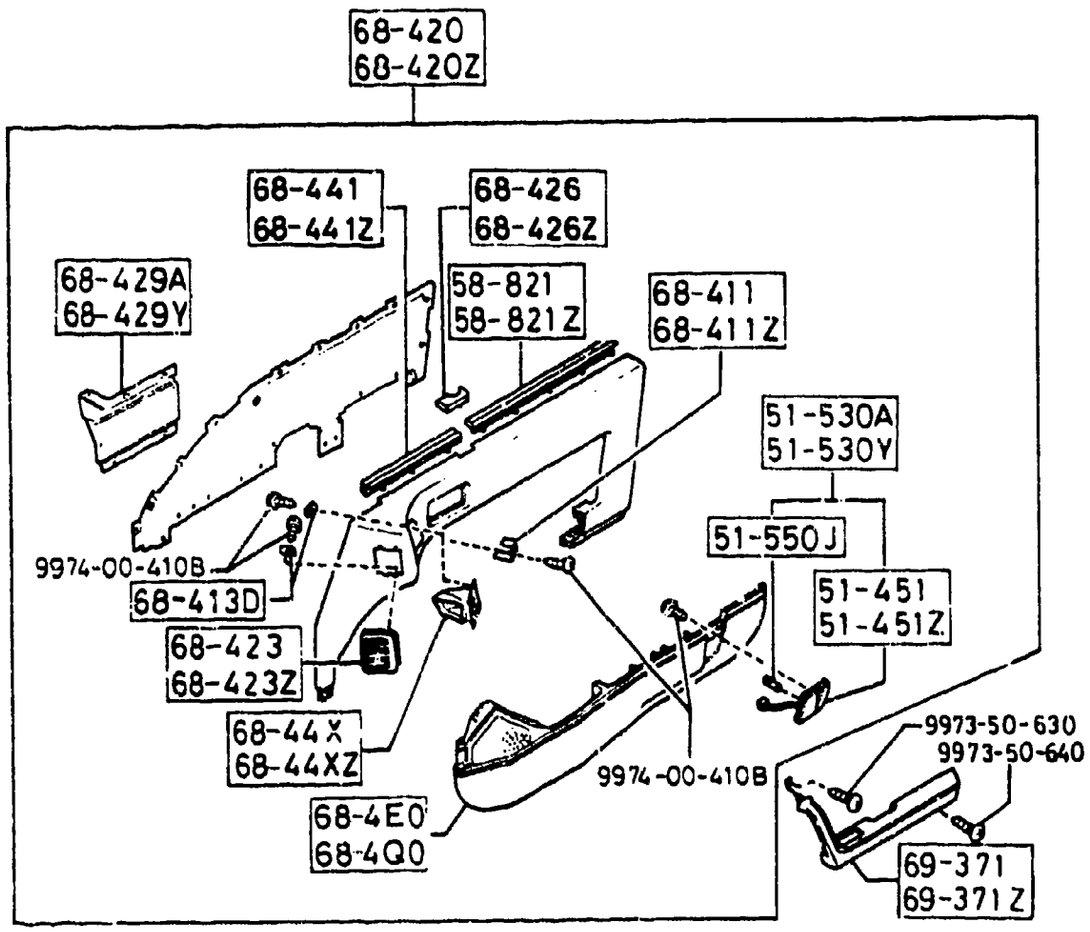


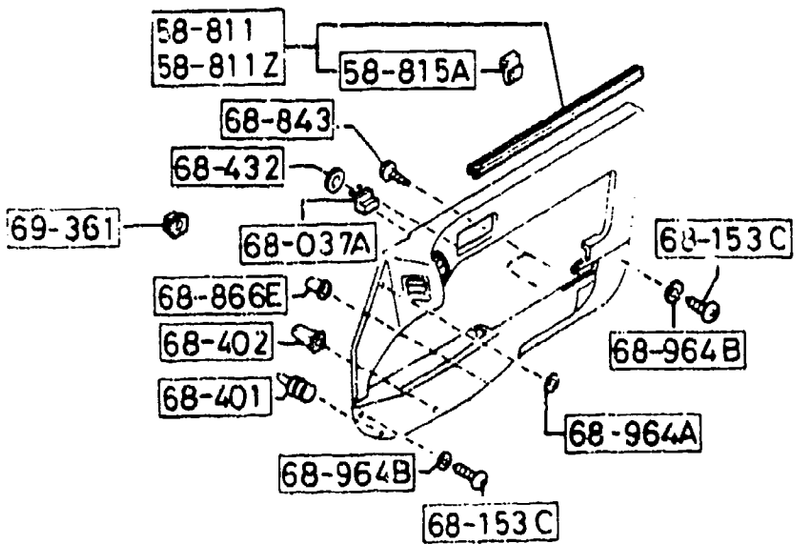


AUFA02



| PART NO. | QTY | MODEL/RESTRICTION | MODEL/RESTRICTION | MODEL/RESTRICTION | FROM-TO |
|---|---|---|---|---|---|
| CONT'D | | | | | |
| A (FC04-68-4E0A) | | | | | |
| 02 | | FD8 BLACK | | | |
| 48 | | FD9 BLUE | | | |
| FC04-68-4E0A | 1 | | | | 9113-9701 |
| A (FC04-68-4E0B) | | | | | |
| 02 | | FD8 BLACK | | | |
| 48 | | FD9 BLUE | | | |
| FC04-68-4E0B | 1 | | | | 9701- |
| 02 | | FD8 BLACK | | | |
| 48 | | FD9 BLUE | | | |
| 68-4Q0 | | PLATE(L),KICK-D.TRIM | | | |
| FC04-68-4Q0 | 1 | | | | -9113 |
| A (FC04-68-4Q0A) | | | | | |
| 02 | | FD8 BLACK | | | |
| 48 | | FD9 BLUE | | | |
| FC04-68-4Q0A | 1 | | | | 9113-9701 |
| A (FC04-68-4Q0B) | | | | | |
| 02 | | FD8 BLACK | | | |
| 48 | | FD9 BLUE | | | |
| FC04-68-4Q0B | 1 | | | | 9701- |
| 02 | | FD8 BLACK | | | |
| 48 | | FD9 BLUE | | | |
| 68-401 | | FASTENER,DOOR TRIM | | | |
| B100-68-401 | 16 | | | | |
| 68-402 | | GROMMET,SCREW | | | |
| FA54-68-402 | 8 | | | | |
| 68-411 | | BRKT NO.1(R),GRILLE-TRIM | | | |
| FB01-68-414 | 1 | | | | |
| 68-411Z | | BRKT NO.1(L),GRILLE-TRIM | | | |
| FB01-68-415 | 1 | | | | |
| 68-413D | | WASHER | | | |
| FB01-68-413 | 10 | | | | |

9113 FC3***-700067
9701 FC3***-709151

CAT. AUFA02-06

1992-05

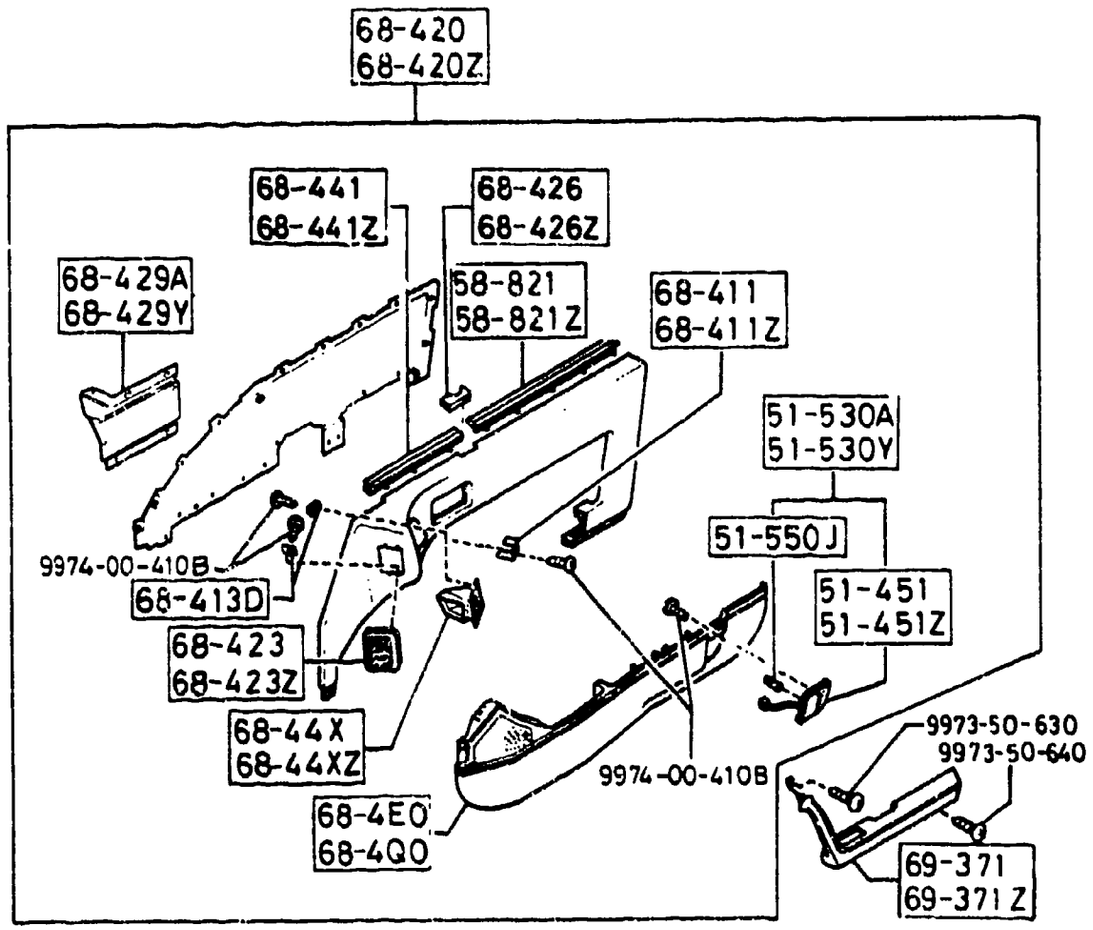


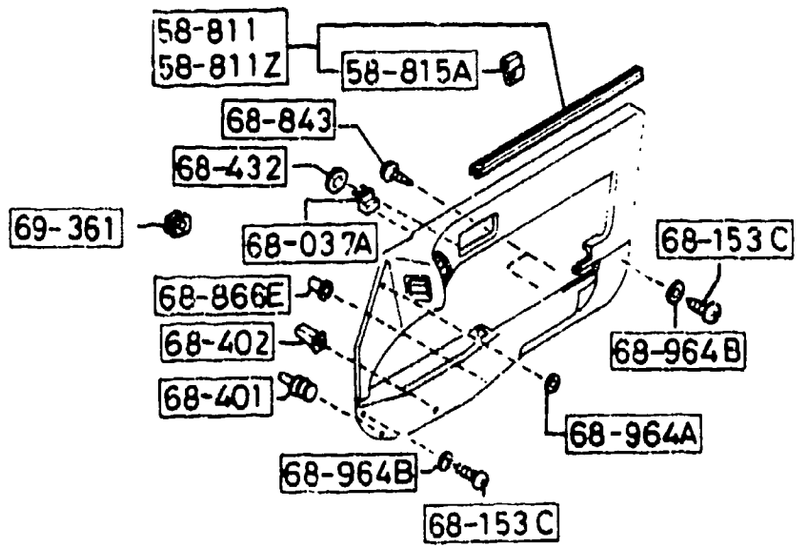






| PART NO. | QTY | MODEL/RESTRICTION | MODEL/RESTRICTION | MODEL/RESTRICTION | FROM-TO |
|---|---|---|---|---|---|
| 68-420 | | TRIM(R),DOOR | | | |
| FC33-68-420 | 1 | | | | -9113 |
| A (FC33-68-420A) | | | | | |
| 02 | | FD8 BLACK | | | |
| 48 | | FD9 BLUE | | | |
| FC33-68-420A | 1 | | | | 9113-9307 |
| A (FC33-68-420B) | | | | | |
| 02 | | FD8 BLACK | | | |
| 48 | | FD9 BLUE | | | |
| FC33-68-420B | 1 | | | | 9307- |
| 02 | | FD8 BLACK | | | |
| 48 | | FD9 BLUE | | | |
| 68-420Z | | TRIM(L),DOOR | | | |
| FC33-68-450 | 1 | | | | -9113 |
| A (FC33-68-450A) | | | | | |
| 02 | | FD8 BLACK | | | |
| 48 | | FD9 BLUE | | | |
| FC33-68-450A | 1 | | | | 9113-9307 |
| A (FC33-68-450B) | | | | | |
| 02 | | FD8 BLACK | | | |
| 48 | | FD9 BLUE | | | |
| FC33-68-450B | 1 | | | | 9307- |
| 02 | | FD8 BLACK | | | |
| 48 | | FD9 BLUE | | | |
| 68-423 | | COVER(R),DUST-DOOR TRIM | | | |
| FB01-68-423 | 1 | | | | |
| 02 | | FD8 FE1 BLACK | | | |
| 48 | | FD9 BLUE | | | |
| 68-423Z | | COVER(L),DUST-DOOR TRIM | | | |
| FB01-68-453 | 1 | | | | |
| 02 | | FD8 FE1 BLACK | | | |
| 48 | | FD9 BLUE | | | |
| 68-426 | | VESSEL(R),CHANNEL | | | |
| FB67-68-426 | 1 | | | | |

9113 FC3####-700067
9307 FC3####-704476

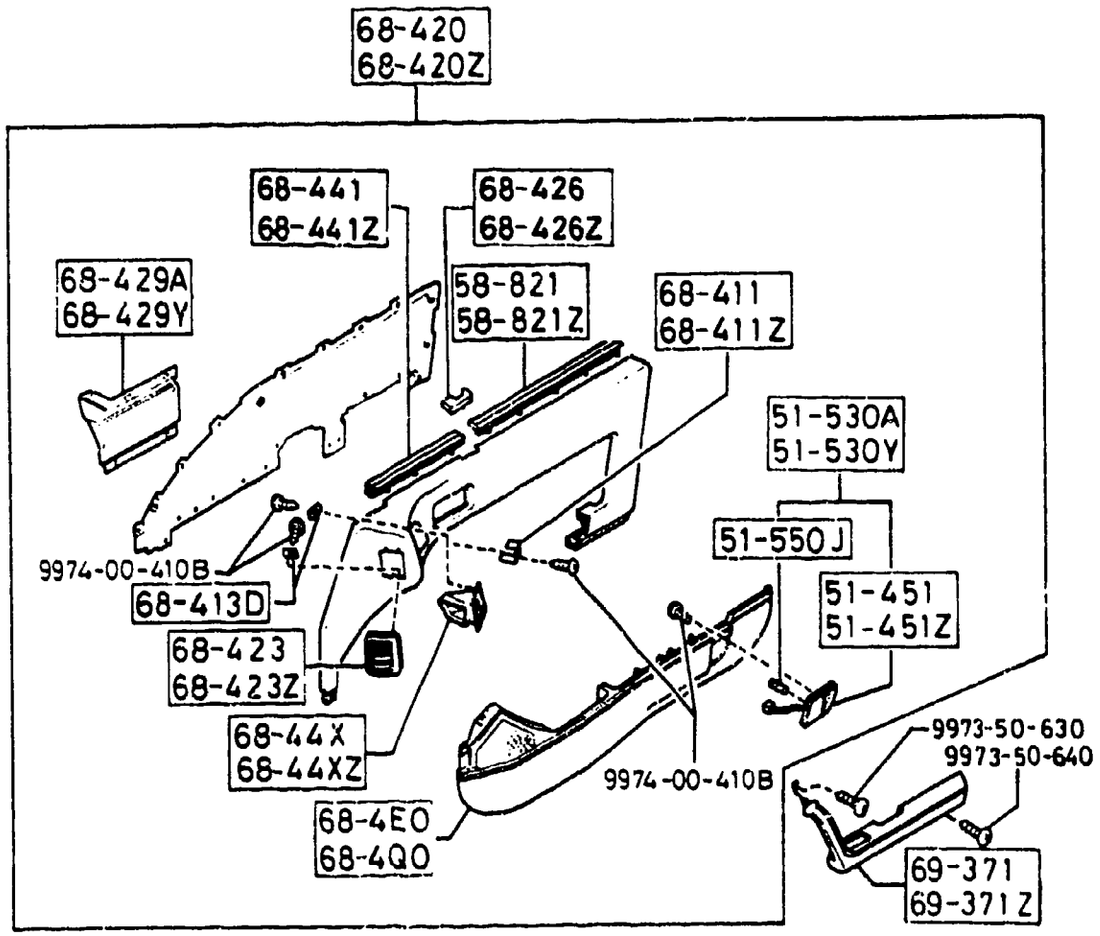


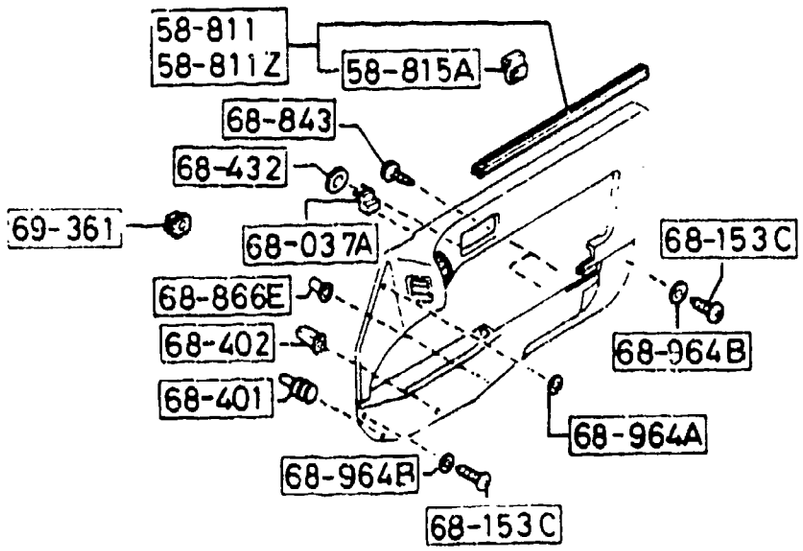






| PART NO. | QTY | MODEL/RESTRICTION | MODEL/RESTRICTION | MODEL/RESTRICTION | FROM-TO |
|---|---|---|---|---|---|
| 68-426Z | | VESSEL(L),CHANNEL | | | |
| FB67-68-456 | 1 | | | | |
| 68-429A | | COVER(R),POCKET-DOOR TRIM | | | |
| FC04-68-433 | 1 | | | | |
| 02 | | FD8 FE1 BLACK | | | |
| 48 | | FD9 BLUE | | | |
| 68-429Y | | COVER(L),POCKET-DOOR TRIM | | | |
| FC04-68-463 | 1 | | | | |
| 02 | | FD8 FE1 BLACK | | | |
| 48 | | FD9 BLUE | | | |
| 68-432 | | NUT,SPEED | | | |
| G033-68-432 | 2 | | | | |
| 68-44X | | GRILLE(R),VENT.-DOOR TRIM | | | |
| FB01-68-44X | 1 | | | | |
| 02 | | FD8 FE1 BLACK | | | |
| 48 | | FD9 BLUE | | | |
| 8-44XZ | | GRILLE(L),VENT.-DOOR TRIM | | | |
| FB01-68-47X | 1 | | | | |
| 02 | | FD8 FE1 BLACK | | | |
| 48 | | FD9 BLUE | | | |
| 68-441 | | GARNISH(R),DOOR | | | |
| FB67-68-422 | 1 | | | | |
| 68-441Z | | GARNISH(L),DOOR | | | |
| FB67-68-452 | 1 | | | | |
| 68-843 | | SCREW,TAPPING | | | |
| UB39-68-805 | 4 | | | | |
| 68-866E | | FASTENER,SEAL | | | |
| 0187-58-922 | 2 | | | | |
| 68-964A | | WASHER | | | |

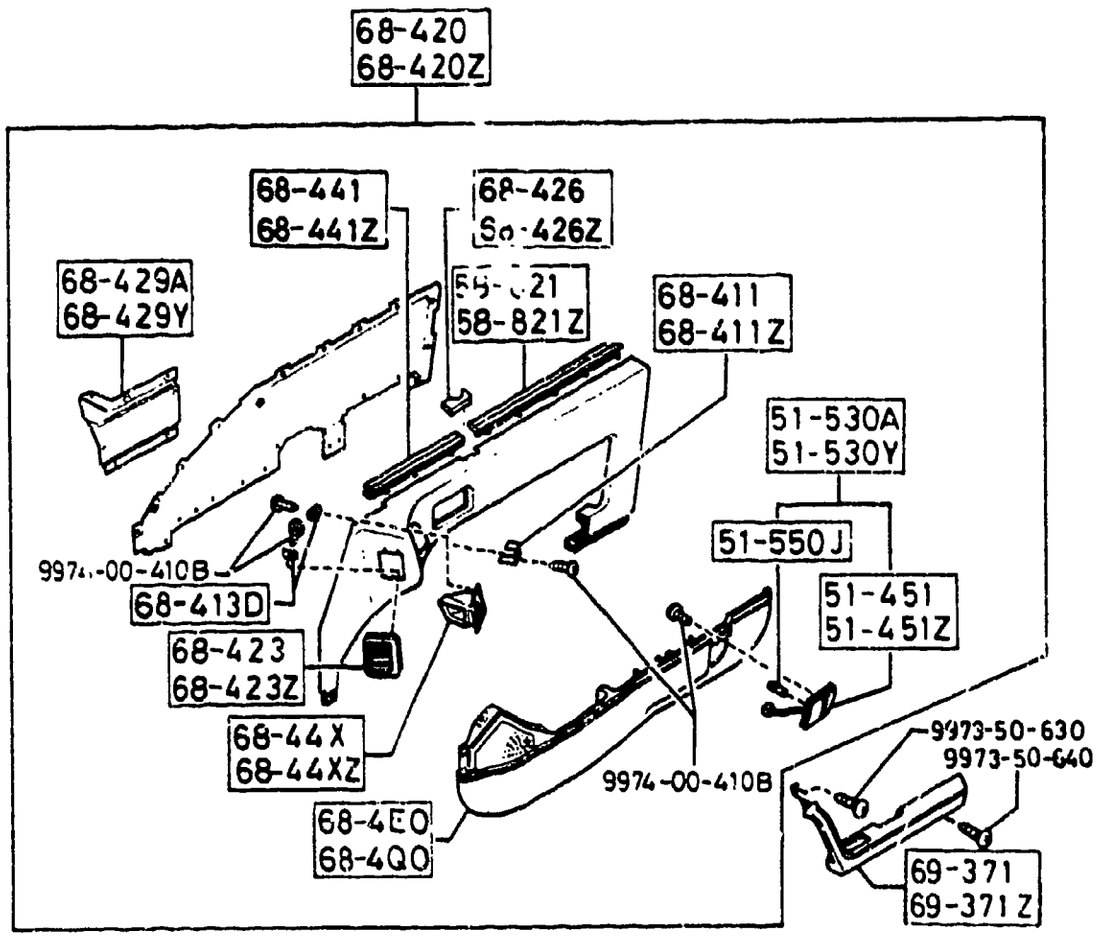


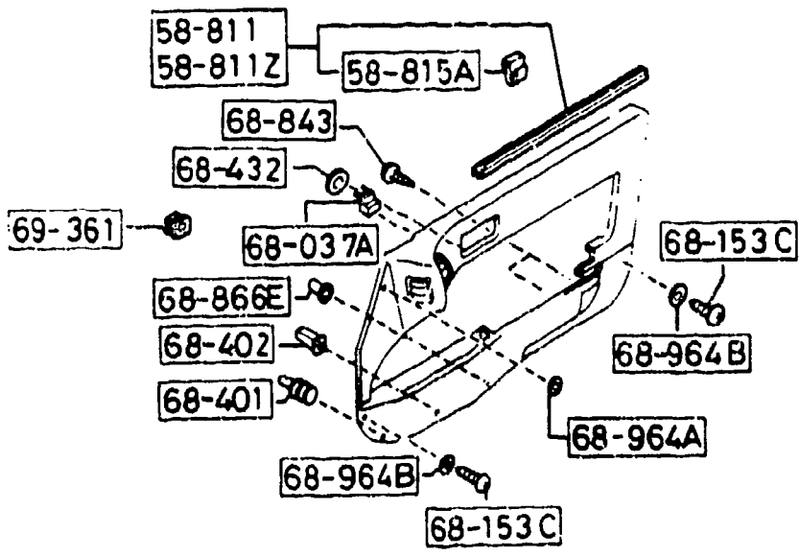






| PART NO. | QTY | MODEL/RESTRICTION | MODEL/RESTRICTION | MODEL/RESTPICTION | FROM-TO |
|---|---|---|---|---|---|
| CONT'D | | | | | |
| G030-68-964C | 2 | | | | |
| 02 | | FD8 FE1 BLACK | | | |
| 48 | | FD9 BLUE | | | |
| +---------+ | | | | | |
| \| 68-964B \| | | WASHER | | | |
| +---------+ | | | | | |
| FB01-68-427 | 4 | | | | |
| 02 | | FD8 FE1 BLACK | | | |
| 48 | | FD9 BLUE | | | |
| +---------+ | | | | | |
| \| 69-361 \| | | GROMMET,SCREW | | | |
| +---------+ | | | | | |
| B316-69-361 | 12 | | | | |
| +---------+ | | | | | |
| \| 69-371 \| | | REST(R),ARM | | | |
| +---------+ | | | | | |
| FB01-69-370 | 1 | | | | |
| 02 | | FD8 FE1 BLACK | | | |
| 48 | | FD9 BLUE | | | |
| +---------+ | | | | | |
| \| 69-371Z \| | | REST(L),ARM | | | |
| +---------+ | | | | | |
| FB01-69-390 | 1 | | | | |
| 02 | | FD8 FE1 BLACK | | | |
| 48 | | FD9 BLUE | | | |