Parts Catalog

Mazda RX-7
U.S.A.
('89►'90)

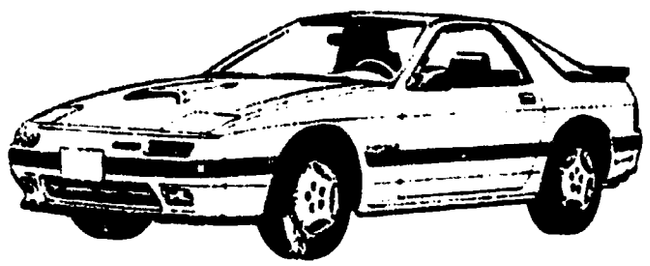

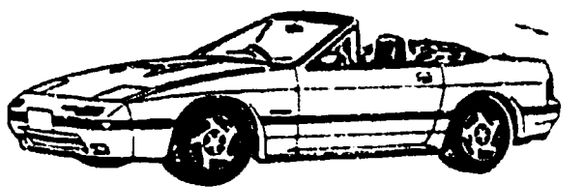

FC3•••-700001 ~ 900000

May'92 (FINAL)

Cata og No. AU-FA02-06

mazda

© 1992 Mazda Motor Corporation

LAYOUT OF CONTENTS

- The following is a typical example of the layout of contents on Mazda microfiche parts catalog.

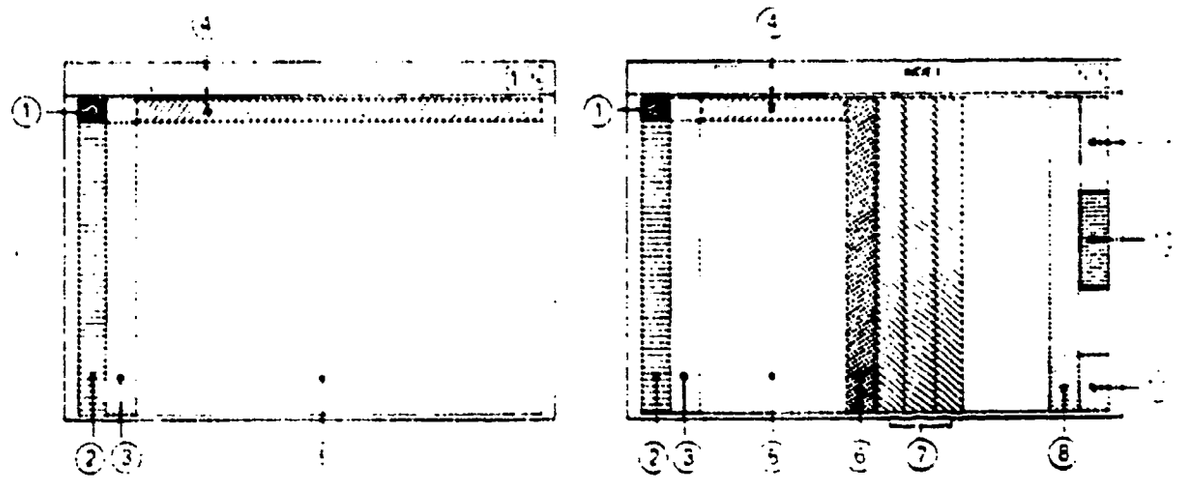

1 • Layout of contents	2 • Pictorial Index	3 • Master Section No. Index
4 • Section No. Index for the Column	5 • Illustration & Text	6 • Part No. Index
7 • Alphabetical Index	8 • Model Identification	9 • Vehicle Identification System

PICTORIAL INDEX

ENGINE (1/2)

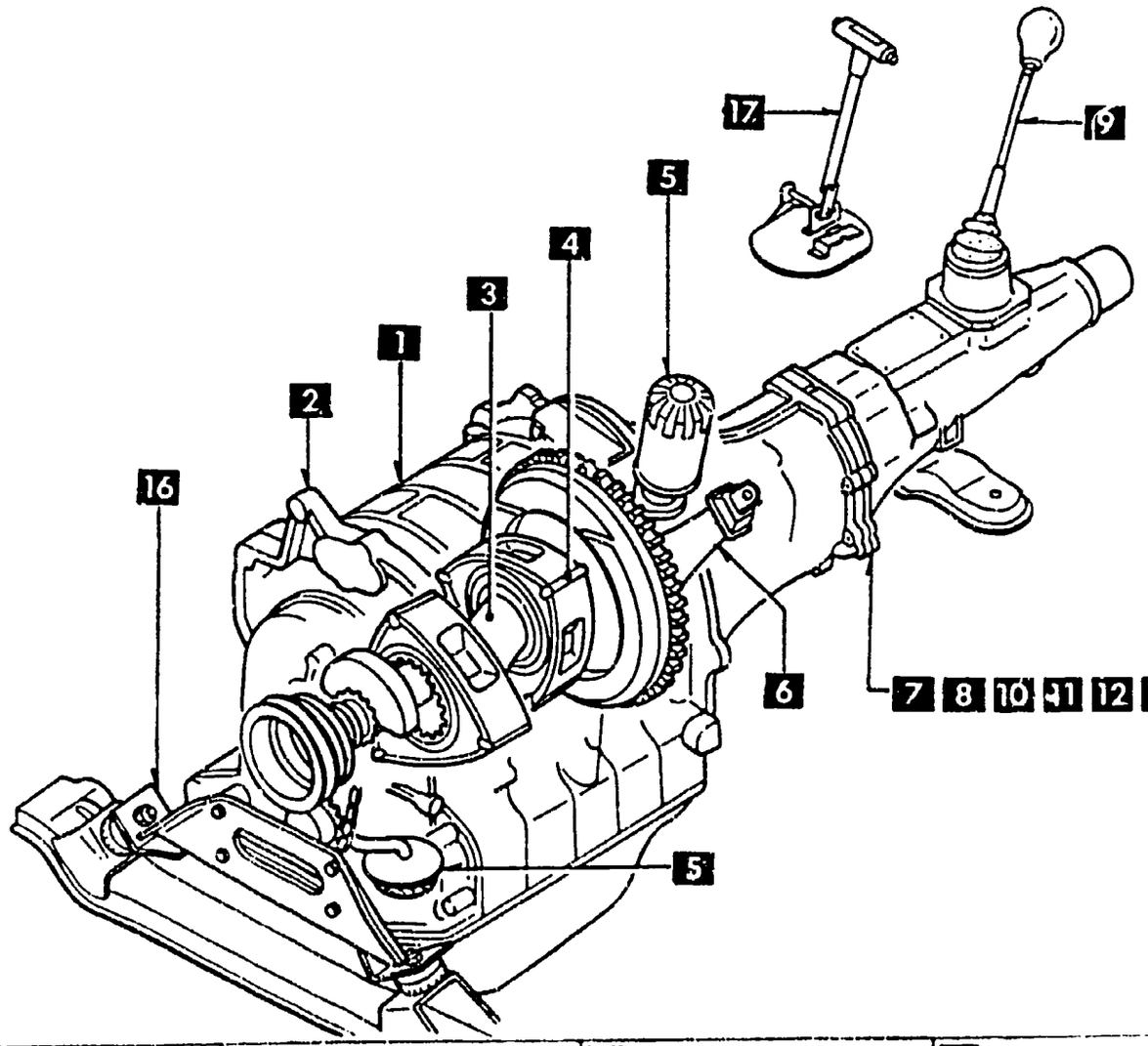

1000



SHORT ENGINE & GASKET SETS

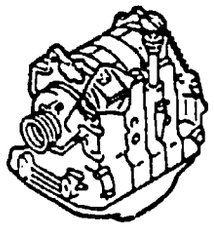

1 1030

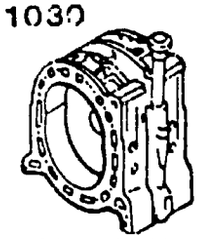

ROTOR HOUSINGS

2 1040



OIL PAN, FRONT & REAR HOUSING

3 1100

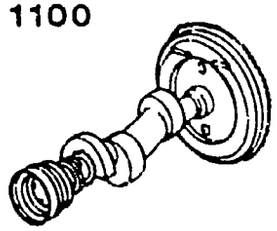

ECCENTRIC SHAFT & FLYWHEEL

4 1110



ROTORS & RELATED PARTS

5 1400

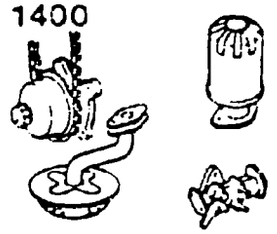

OIL PUMP & FILTER

6 1600

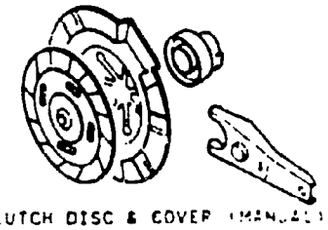

CLUTCH DISC & COVER (MANUAL)

7 1700

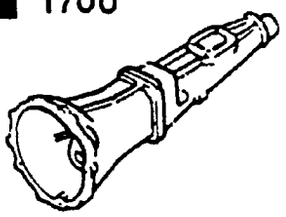

TRANSMISSION CASE (MANUAL)

8 1710

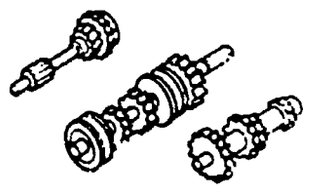

TRANSMISSION GEARS (MANUAL)

9 1720

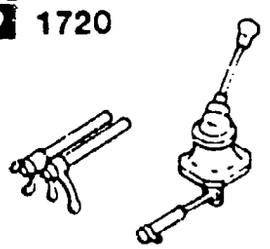

CHANGE CONTROL SYSTEM (MANUAL)

17 4600



CHANGE CONTROL SYSTEM

16 3900

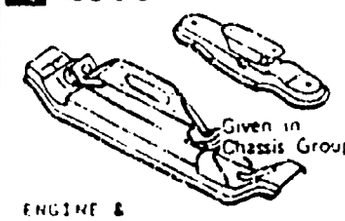

ENGINE & TRANSMISSION MOUNTINGS

15 1960

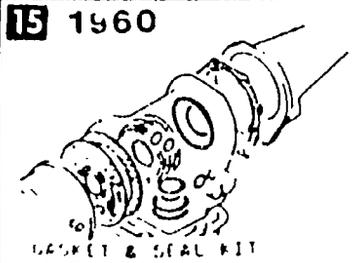

GASKET & SEAL KIT (AUTOMATIC)

14 1950

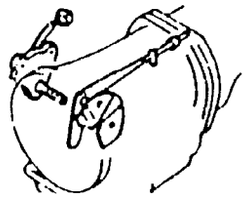

MANUAL LINKAGE SYSTEM (AUTOMATIC)

13 1940

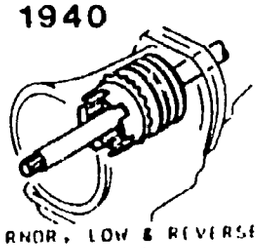

GOVERNOR, LOW & REVERSE PISTON (AUTOMATIC)

12 1930

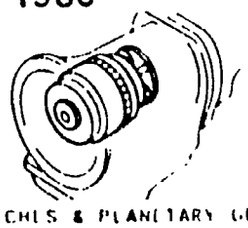

CLUTCHES & PLANETARY GEARS (AUTOMATIC)

11 1920 1925

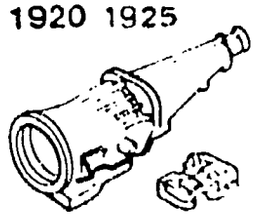

TRANSMISSION CASE & MAIN CONTROL SYSTEM (AUTOMATIC)

10 1910

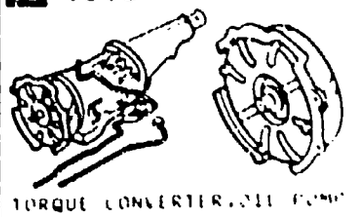

TORQUE CONVERTER, OIL PUMP & PIPINGS (AUTOMATIC)

As this illustration is prepared to be applicable to all models, some parts are different in specifications from the parts listed in this parts Catalog

PICTORIAL INDEX

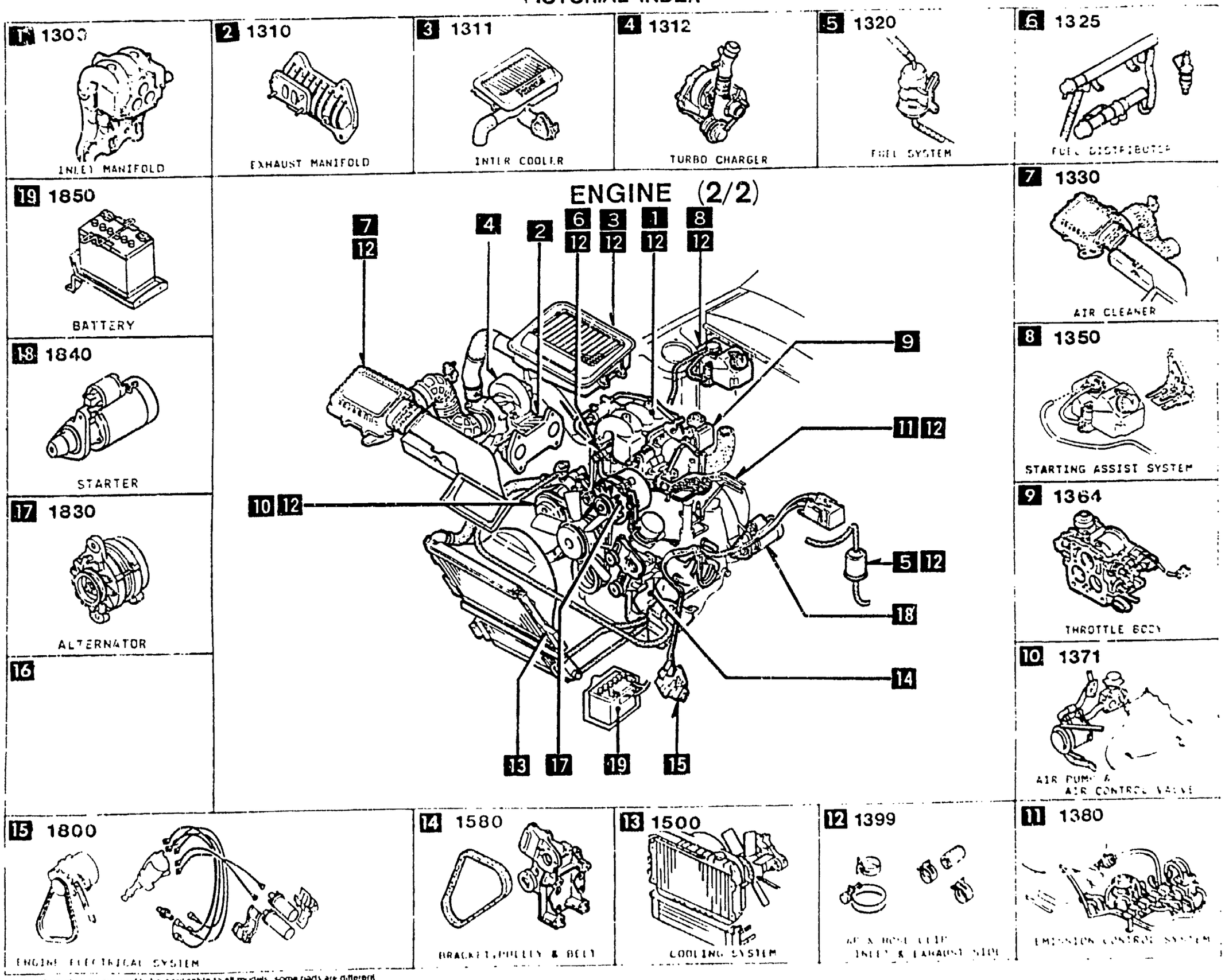

As this illustration is prepared to be applicable to all models, some parts are different specifications from the parts listed in this parts Catalog

PICTORIAL INDEX

CHASSIS (1/2)

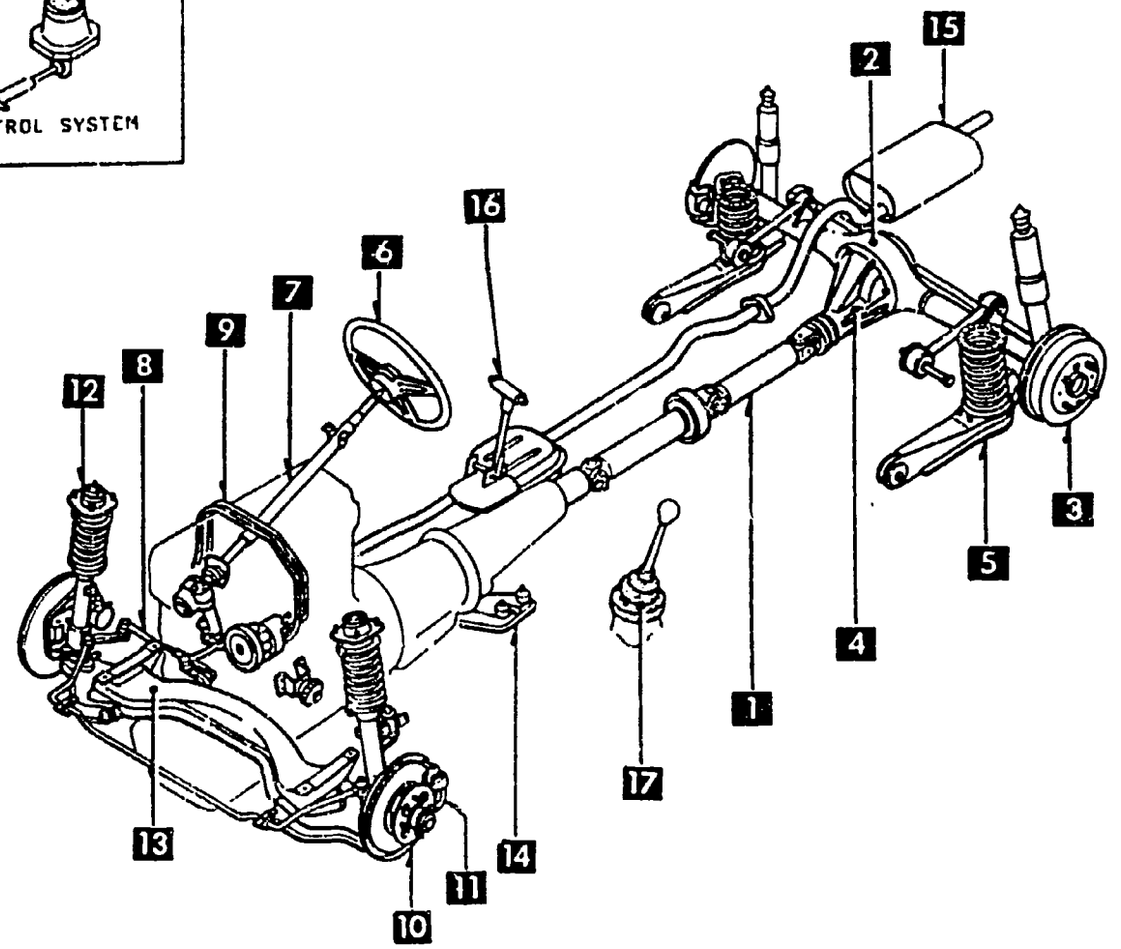

1 2505

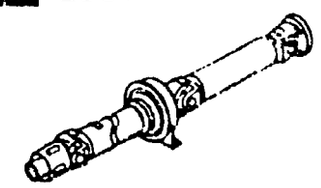

REAR PROPELLER SHAFT

2 2550

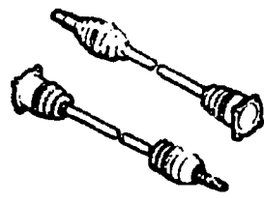

REAR DRIVE SHAFT

2600

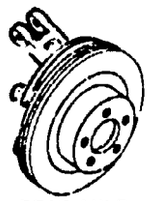

REAR AXLE

3 2610



REAR BRAKE MECHANISMS

4 2710

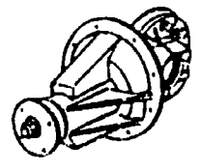

REAR DIFFERENTIALS

5 2800 2810

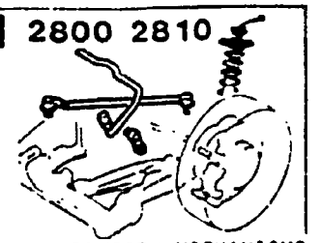

REAR SUSPENSION MECHANISMS
REAR STABILIZER

2801

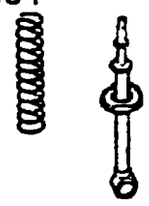

REAR SPRING & DAMPER

2830

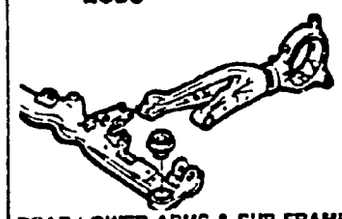

REAR LOWER ARMS & SUB FRAME

6 3200



STEERING WHEEL

7 3210

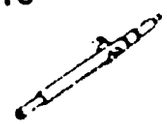

STEERING
COLUMN & SHAFTS

8 3220

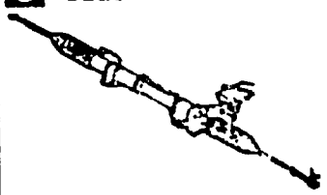

STEERING GEAR

9 3240

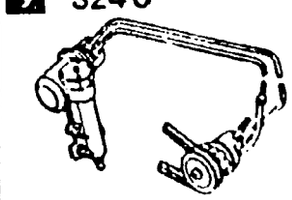

POWER STEERING SYSTEM

10 3300

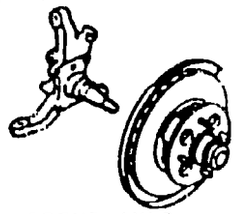

FRONT AXLE

11 3310



FRONT BRAKE MECHANISMS

3400

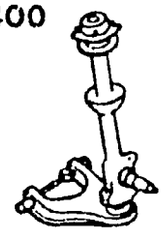

FRONT
SUSPENSION MECHANISMS

12 3401



FRONT SPRING & DAMPER

13 3410

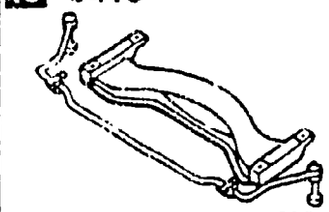

CROSSMEMBER & STABILIZER

14 3900

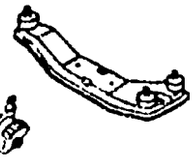

ENGINE &
T/MISSION MOUNTINGS

16 4600

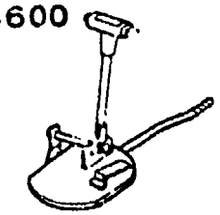

CHANGE CONTROL SYSTEM
(AUTOMATIC)

17 1720

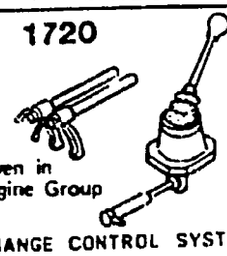

Given in
Engine Group

CHANGE CONTROL SYSTEM
(MANUAL)

15 4000

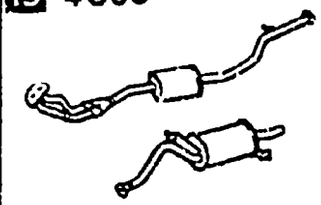

EXHAUST SYSTEM

As this illustration is prepared to be applicable in all models, some parts are different in specifications from the parts listed in this parts Catalog

PICTORIAL INDEX

1 3700

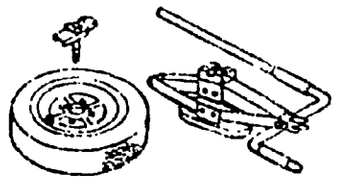

TIRES & JACK

2 4140

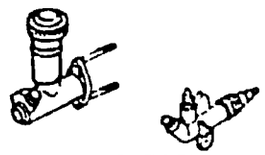

CLUTCH RELEASE & MASTER CYLINDERS (MANUAL TRANSMISSION)

4145

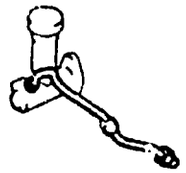

CLUTCH PIPINGS (MANUAL TRANSMISSION)

3 4160

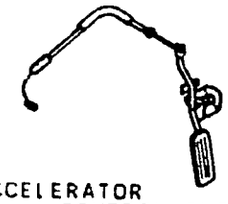

ACCELERATOR CONTROL SYSTEM

4 4200

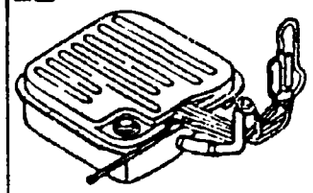

FUEL TANK

5 4300

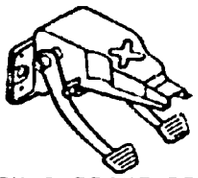

CLUTCH & BRAKE PEDALS (MANUAL TRANSMISSION)

CHASSIS (2/2)

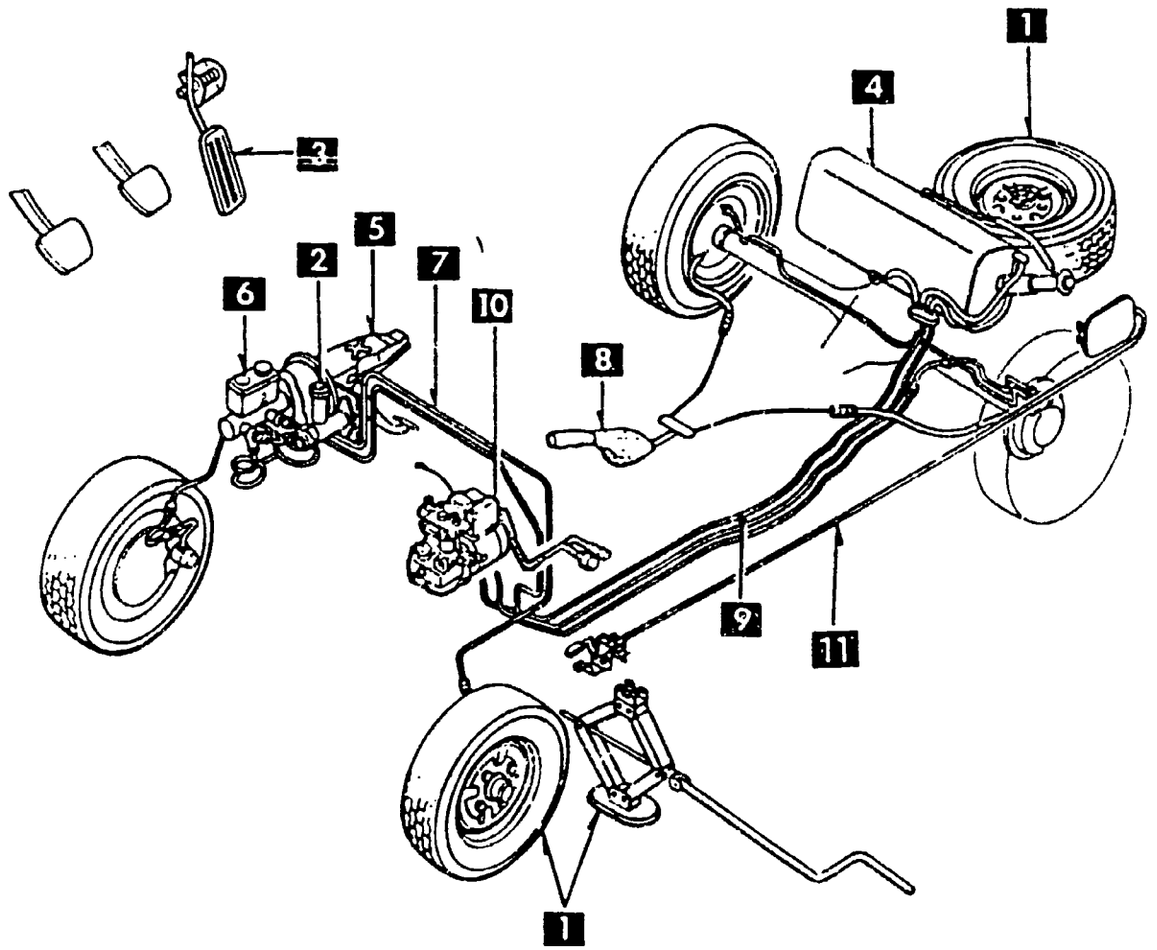

As this illustration is prepared to be applicable to all models, some parts are different in specifications from the parts listed in this parts Catalog.

6 4340

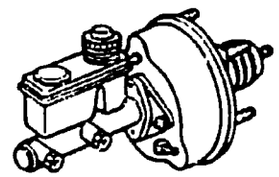

BRAKE MASTER CYLINDER & POWER BRAKE

7 4360

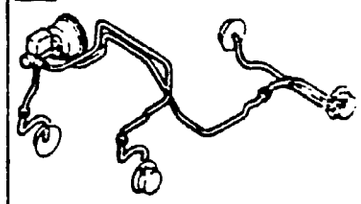

BRAKE PIPINGS

8 4400

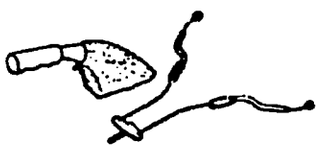

PARKING BRAKE SYSTEM

9 4500

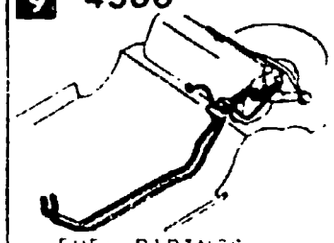

FUEL PIPINGS

11 4210

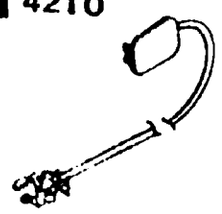

FUEL LID OPENER

10 4370

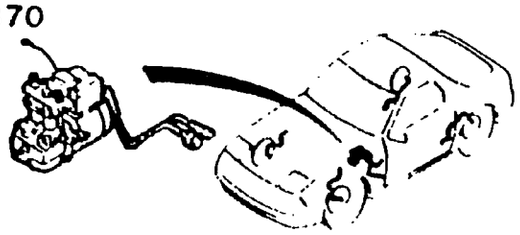

ANTILOCK BRAKE SYSTEM

PICTORIAL INDEX

1 0900

KEY SETS

2 5020
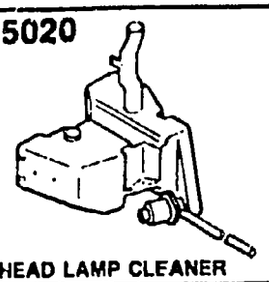
HEAD LAMP CLEANER

3 5100

HEAD LAMPS

4 5103
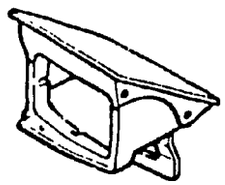
HEAD LAMP RETRACTORS

5 5105
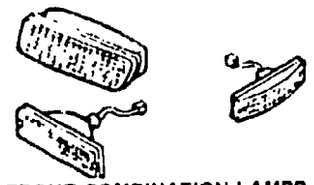
FRONT COMBINATION LAMPS

6 5110
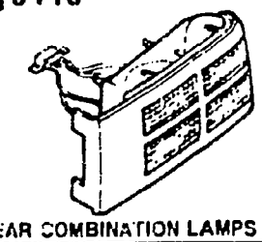
REAR COMBINATION LAMPS

19 6704
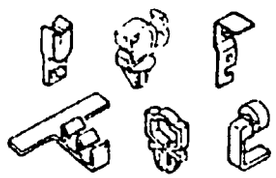
WIRING HARNESS CLAMPS

20 6720
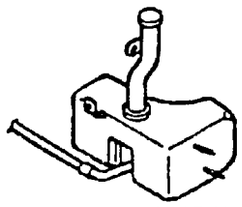
WINDSHIELD WASHER

21 6730
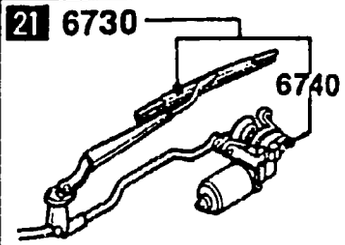

WINDSHIELD WIPERS

22 6750
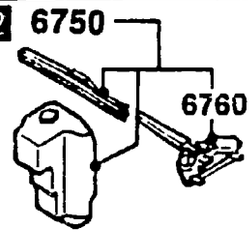

WINDOW WIPER & WASHER (REAR)

7 5120
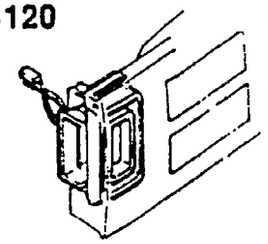
LICENSE LAMPS

18 6703
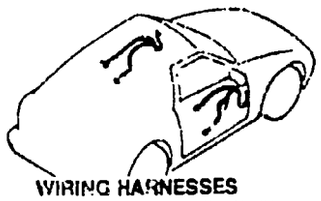
WIRING HARNESSES (DOOR, FLOOR/CEILING)

BODY (1/4)

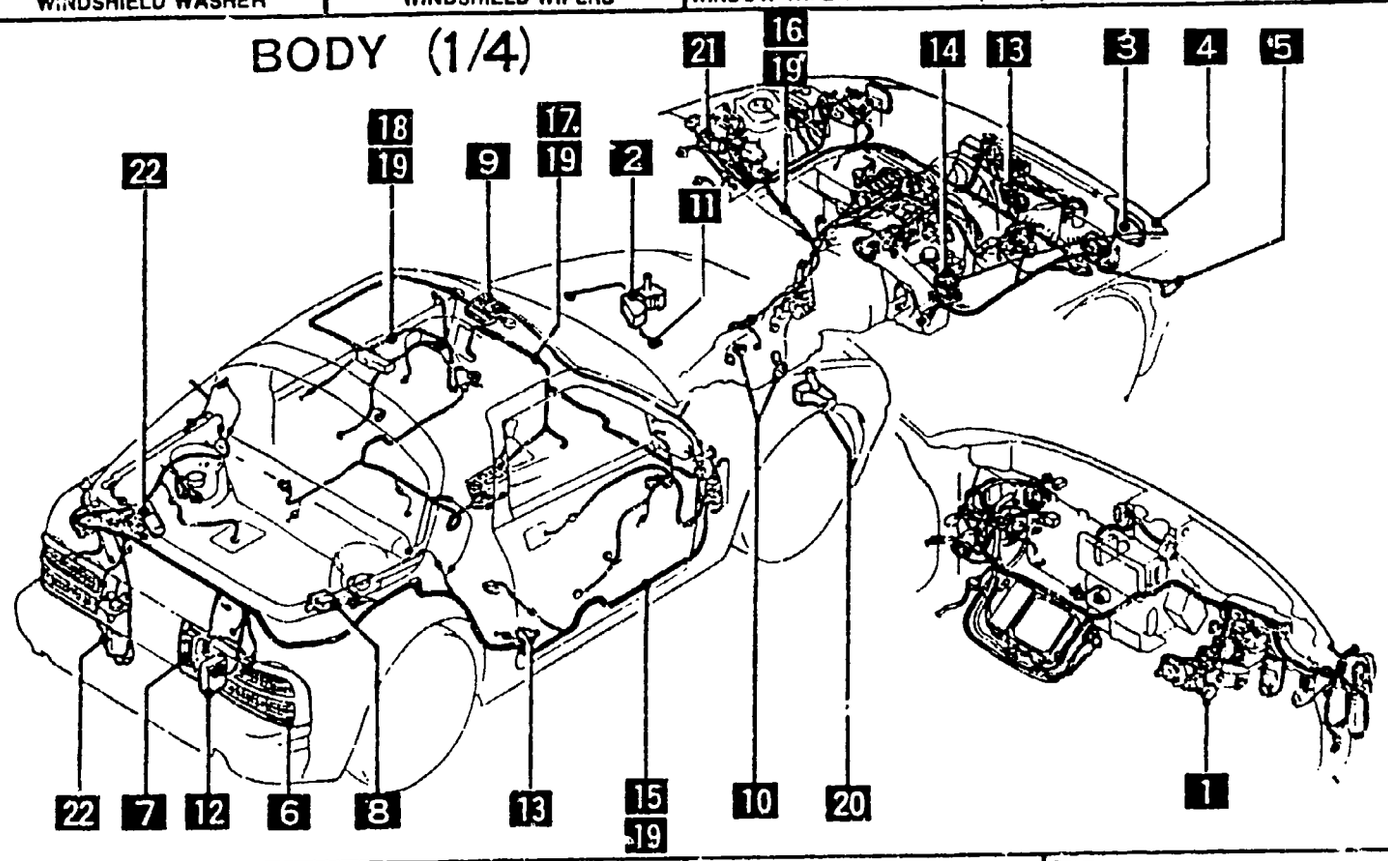

8 5125
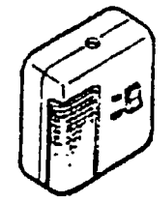
INTERIOR LAMPS

17 6702
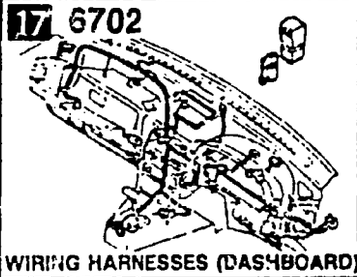
WIRING HARNESSES (DASHBOARD)

9 5130
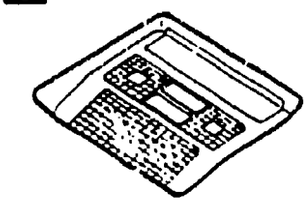
OVERHEAD CONSOLE

16 6701
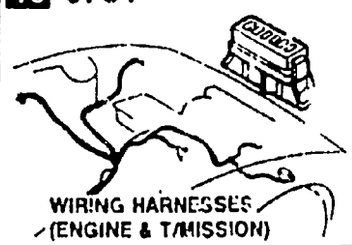
WIRING HARNESSES (ENGINE & T/MISSION)

10 6600

SWITCHES & RELAYS (ENGINE)

15 6700

WIRING HARNESSES (FRONT & REAR)

14 6640
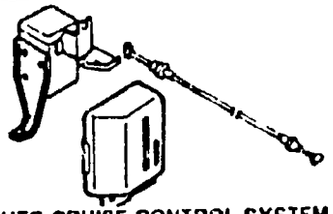
AUTO CRUISE CONTROL SYSTEM

13 6635
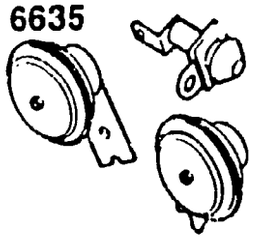
DOOR SWITCH & HORNS

12 6630
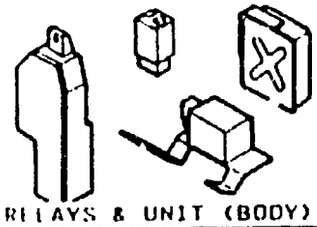
RELAYS & UNIT (BODY)

11 5795
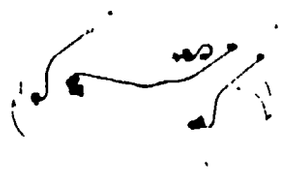
AIR BAG

As this illustration is prepared to be applicable in all models, some parts are different in specifications from the parts listed in this parts Catalog

PICTORIAL INDEX

BODY (2/4)

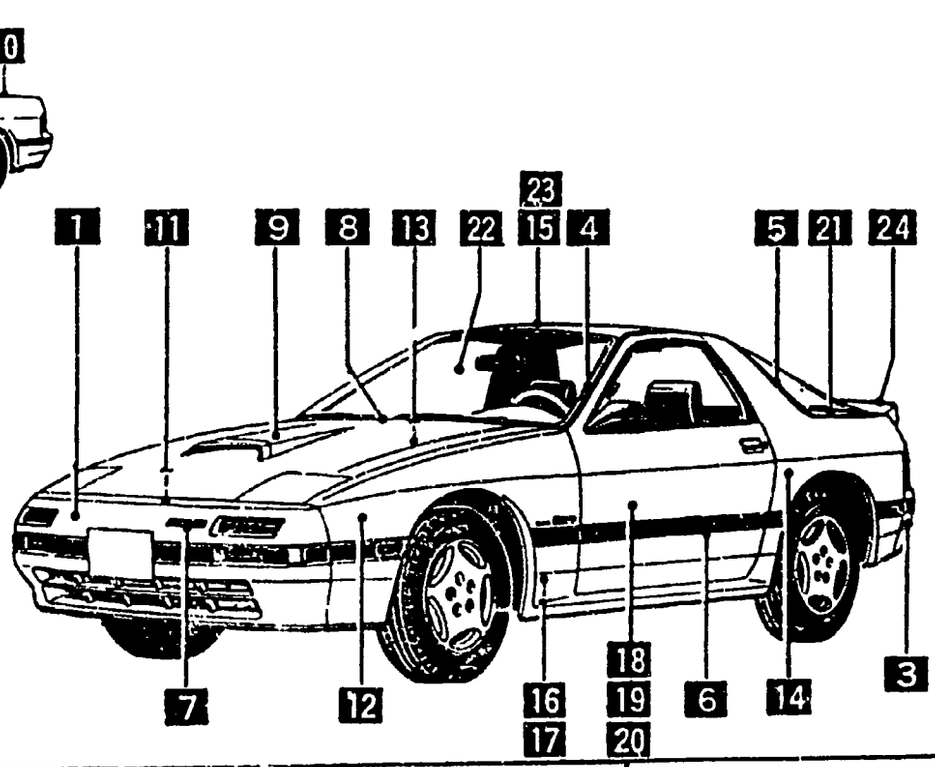

1 5000
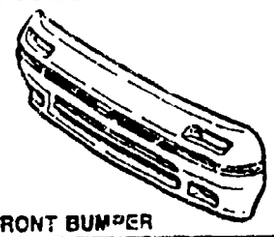
FRONT BUMPER

2

3 5010
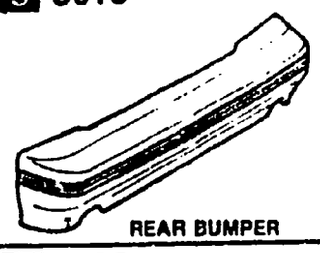
REAR BUMPER

4 5030
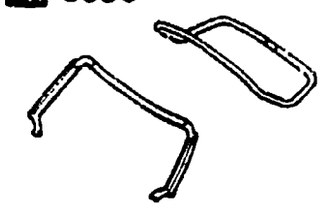
WINDOW MOULDINGS

5 5040
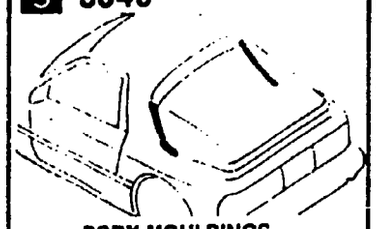
BODY MOULDINGS

6 5060
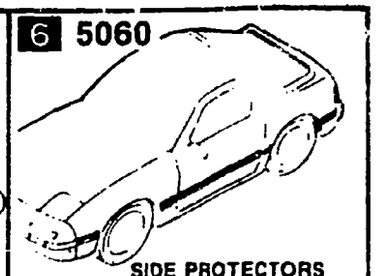
SIDE PROTECTORS

20 5840
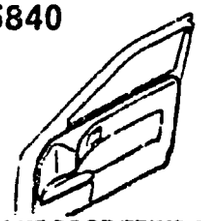
FRONT DOOR TRIMS & RELATED PARTS

21 6230
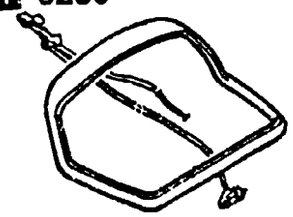
LIFT GATE MECHANISMS

22 6300

WINDOW GLASSES

23 6330
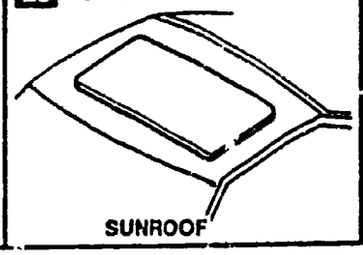
SUNROOF

24 7800
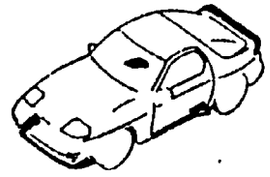
SPOILERS & RELATED PARTS

7 5170
RX-7
mazda
ORNAMENTS

19 5830
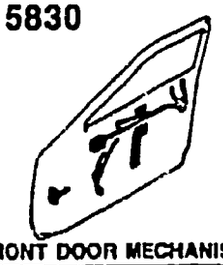
FRONT DOOR MECHANISMS

8 5180
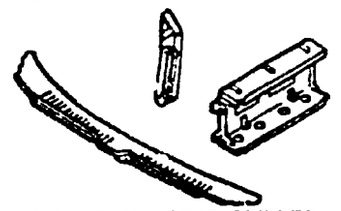
COWL & EXTRACTOR GRILLES

18 5800
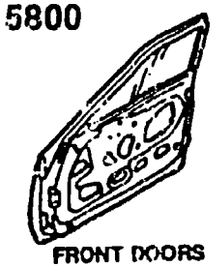
FRONT DOORS

9 5230
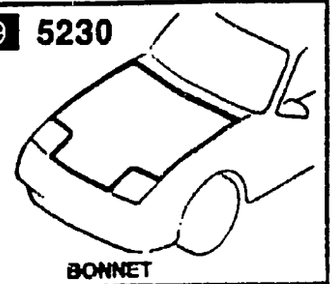
BONNET

17 5390
5380
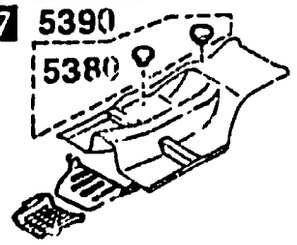
FLOOR ATTACHMENTS

10 5260

TRUNK LID

16 5370

BODY PANELS (FLOOR)

15 6360
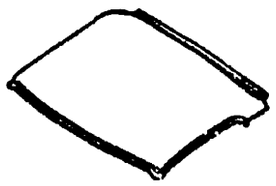
BODY PANELS (ROOF)

14 5340
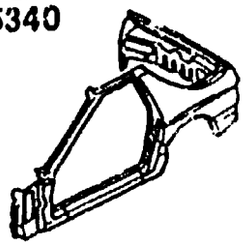
BODY PANELS (SIDE)

13 5330
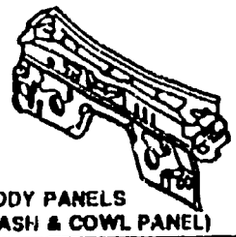
BODY PANELS (DASH & COWL PANEL)

12 5320
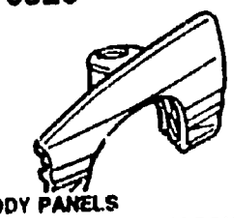
BODY PANELS (FENDER & WHEEL APRON)

11 5310
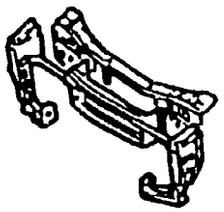
BODY PANELS (FRONT)

As this illustration is prepared to be applicable to all models, some parts are different in specifications from the parts listed in this parts Catalog

PICTORIAL INDEX

1 5500

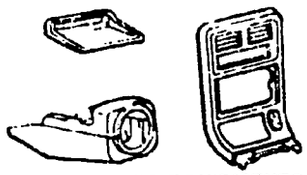

DASHBOARD EQUIPMENTS

2 5520

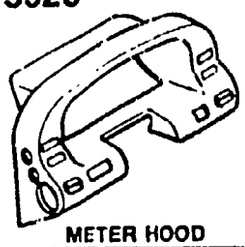

METER HOOD

3 5530

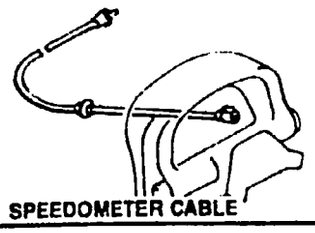

SPEEDOMETER CABLE

4 5540

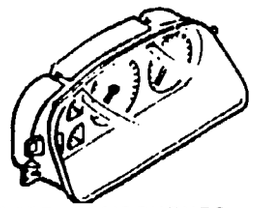

METER COMPONENTS

5 5560

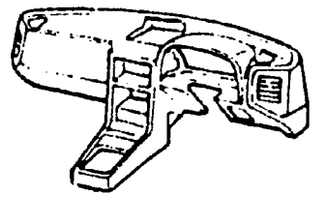

DASHBOARD & RELATED PARTS

6 5570

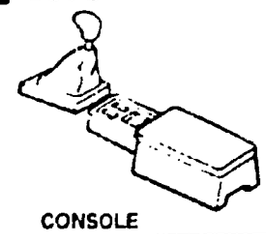

CONSOLE

BODY (3/4)

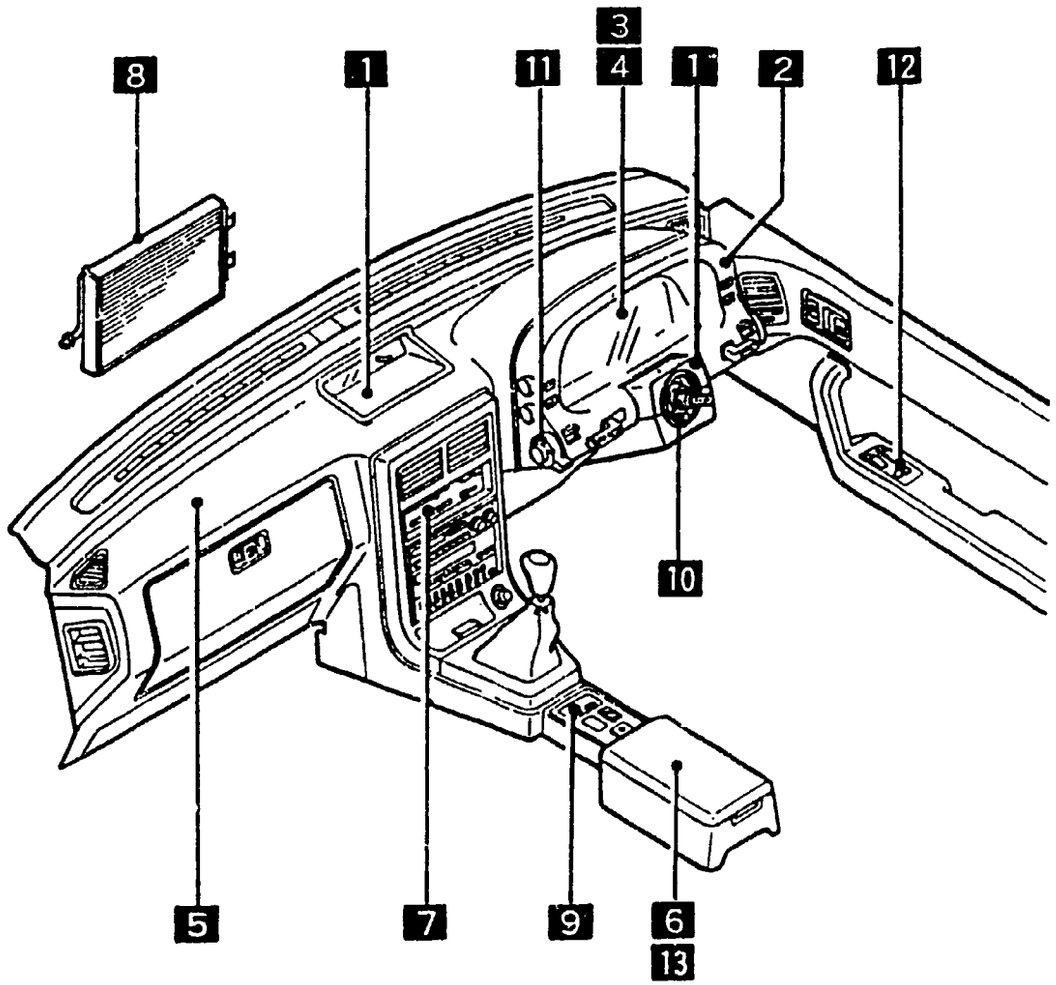

7

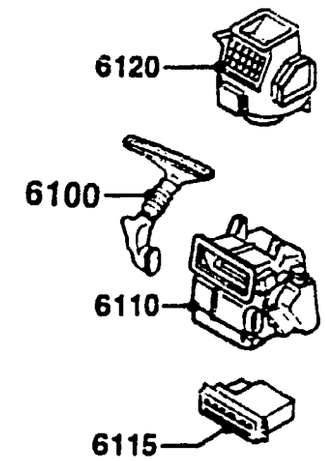

HEATER

8 6130

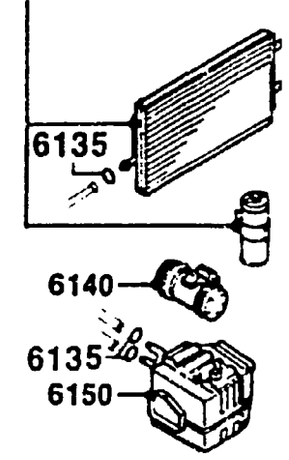

AIR CONDITIONER

13 7900

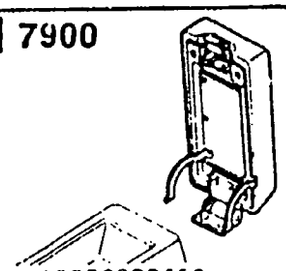

ACCESSORIES

12 6615

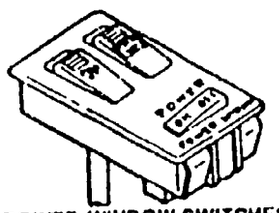

POWER WINDOW SWITCHES

11 6612

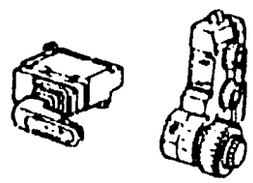

CLUSTER SWITCH

10 6611

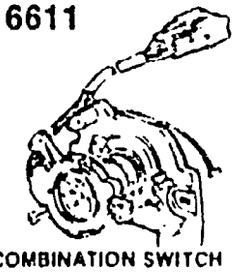

COMBINATION SWITCH

9 6610

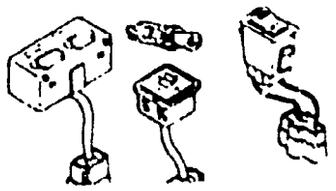

DASHBOARD SWITCHES

As the illustration is prepared to be applicable to all models, some parts are different in specifications from the parts listed in this parts Catalog

PICTORIAL INDEX

1 5580

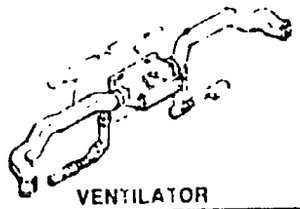

VENTILATOR

2 5700

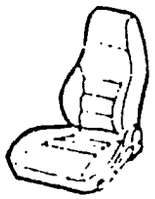

FRONT SEATS

3 5750

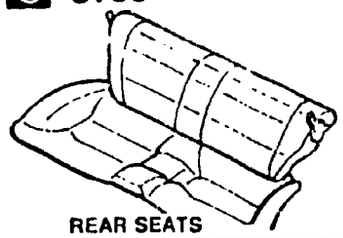

REAR SEATS

4 5790

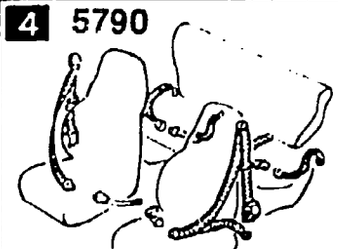

SEAT BELTS

5 6680



AUDIO SYSTEMS
(RADIO & TAPE DECK)

6 6682

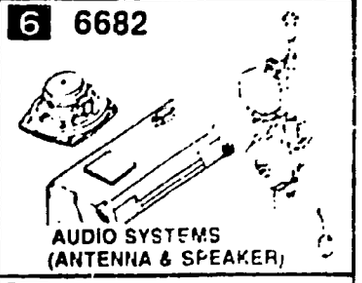

AUDIO SYSTEMS
(ANTENNA & SPEAKER)

BODY (4/4)

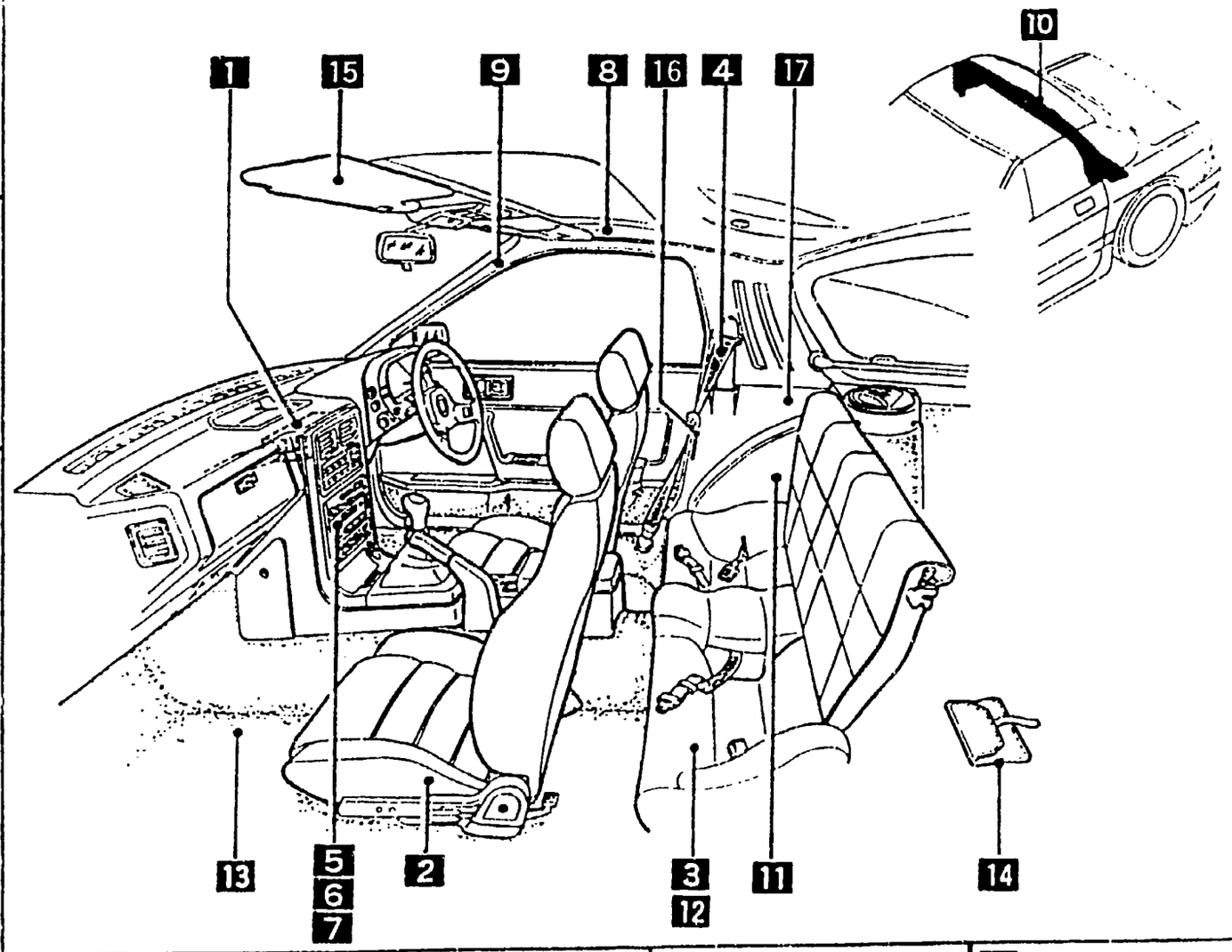

7 6684

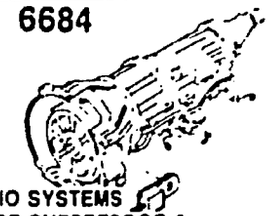

AUDIO SYSTEMS
(NOISE SUPPRESSOR &
EARTH CORD)

8 6800



CEILING TRIMS

9 6820



PILLAR TRIMS

10 6810

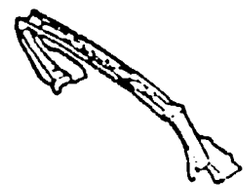

ROLLBAR

11 6840



TRIMS & SCUFF PLATES

12 6845

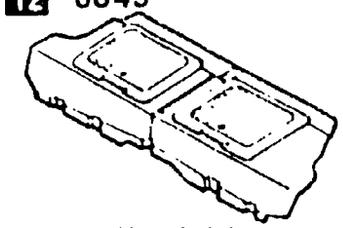

STRAGE BOX

13 6860

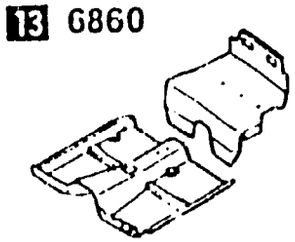

FLOOR MATS & PADS

14 6870

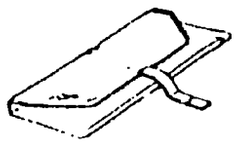

SERVICE TOOLS

15 6900

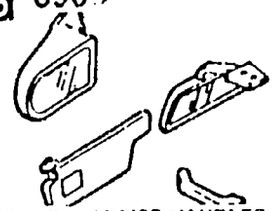

VISORS, ASSIST HANDLES &
MIRRORS

16 693C

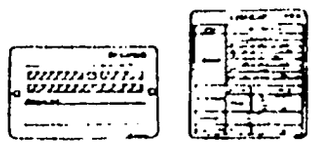

CAUTION PLATES & LABELS

17 7250



QUARTER WINDOW & TRIMS

As this illustration is prepared to be applicable to all models, some parts are different or dependent upon the parts listed in this parts Catalog

SECTION NAME INDEX (ENGINE)

LO.NO	SEC.NO	SECTION NAME
1-C03	1000	SHORT ENGINE & GASKET SETS (W/O TURBO)
1-D03	1000 A	SHORT ENGINE & GASKET SETS (TURBO)
1-E03	1030	ROTOR HOUSINGS (W/O TURBO)
1-G03	1030 A	ROTOR HOUSINGS (TURBO)
1-J03	1040	OIL PAN,FRONT & REAR HOUSING (W/O TURBO)
1-M03	1040 A	OIL PAN,FRONT & REAR HOUSING (TURBO)
1-D04	1100	ECCENTRIC SHAFT & FLYWHEEL
1-G04	1110	ROTORS & RELATED PARTS
1-I04	1300	INLET MANIFOLD
1-M04	1310	EXHAUST MANIFOLD
1-N04	1311	INTER COOLER (TURBO)
1-C05	1312	TURBO CHARGER (TURBO)
1-F05	1320	FUEL SYSTEM
1-H05	1325	FUEL DISTRIBUTOR
1-I05	1330	AIR CLEANER
1-M05	1350	STARTING ASSIST SYSTEM
1-N05	1364	THROTTLE BODY
1-F06	1371	AIR PUMP & AIR CONTROL VALVE
1-I06	1380	EMISSION CONTROL SYSTEM
1-D07	1399	CAP & HOSE CLIP (INLET & EXHAUST SIDE)
1-F07	1400	OIL PUMP & FILTER (W/O TURBO)
1-I07	1400 A	OIL PUMP & FILTER (TURBO)
1-M07	1500	COOLING SYSTEM
1-F08	1580	BRACKET,PULLEY & BELT
1-C09	1600	CLUTCH DISC & COVER (MANUAL)
1-F09	1700	TRANSMISSION CASE (MANUAL)
1-J09	1710	TRANSMISSION GEARS(MANUAL)
1-H10	1720	CHANGE CONTROL SYSTEM (MANUAL)
1-M10	1800	ENGINE ELECTRICAL SYSTEM
1-E11	1830	ALTERNATOR
1-G11	1840	STARTER
1-J11	1850	BATTERY
1-K11	1910	TORQUE CONVERTER,OIL PUMP & PIPINGS (AUTOMATIC)
1-N11	1920	TRANSMISSION CASE & MAIN CONTROL SYSTEM (AUTOMATIC)
1-I12	1925	CONTROL VALVE (AUTOMATIC)
1-D13	1930	CLUTCHES & PLANETARY GEARS (AUTOMATIC)
1-L13	1940	GOVERNOR, LOW & REVERSE PISTON (AUTOMATIC)
1-C14	1950	MANUAL LINKAGE SYSTEM (AUTOMATIC)
1-E14	1960	GASKET & SEAL KIT (AUTOMATIC)

DATE. 1992-05

CATLOG-NO= AUFA02-06

SECTION NAME INDEX (CHASSIS)

LO.NO	SEC.NO	SECTION NAME
2-C03	2505	REAR PROPELLER SHAFT
2-D03	2550	REAR DRIVE SHAFT
2-E03	2600	REAR AXLE
2-G03	2610	REAR BRAKE MECHANISMS
2-K03	2710	REAR DIFFERENTIALS (NORMAL DIFF.)
2-C04	2710 A	REAR DIFFERENTIALS (LIMITED SLIP DIFF.)
2-H04	2800	REAR SUSPENSION MECHANISMS
2-J04	2801	REAR SPRING & DAMPER
2-K04	2810	REAR STABILIZER
2-L04	2830	REAR LOWER ARMS & SUB FRAME
2-N04	3200	STEERING WHEEL (W/O AIR BAG)
2-E05	3200 A	STEERING WHEEL (W/ AIR BAG)
2-G05	3210	STEERING COLUMN & SHAFTS
2-I05	3220 A	STEERING GEAR (W/ POWER STEERING:ENGINE REVOLUTION PER MINUTE SENSOR) (GTU,'90-GXL,'90-CONV-W/O AIR BAG)
2-L05	3220 B	STEERING GEAR (W/ POWER STEERING:VELOCITY SENSOR) (GTUS,'90-GXL,TURBO,'89-CONV,'90-CONV-W/AIR BAG)
2-C06	3240	POWER STEERING SYSTEM
2-F06	3300	FRONT AXLE
2-H06	3310	FRONT BRAKE MECHANISMS
2-K06	3400	FRONT SUSPENSION MECHANISMS
2-M06	3401	FRONT SPRING & DAMPER
2-N06	3410	CROSSMEMBER & STABILIZER
2-C07	3700	TIRES & JACK
2-C08	3900	ENGINE & T/MISSION MOUNTINGS (MT)
2-D08	3900A	ENGINE & T/MISSION MOUNTINGS (AT)
2-E08	4000	EXHAUST SYSTEM (W/O TURBO)
2-I08	4000 A	EXHAUST SYSTEM (TURBO)
2-M08	4140	CLUTCH RELEASE & MASTER CYLINDERS (MANUAL TRANSMISSION)
2-C09	4145	CLUTCH PIPINGS (MANUAL TRANSMISSION)
2-D09	4160	ACCELERATOR CONTROL SYSTEM
2-E09	4200	FUEL TANK
2-H09	4300	CLUTCH & BRAKE PEDALS (MANUAL TRANSMISSION)
2-K09	4300A	BRAKE PEDALS (AUTOMATIC TRANSMISSION)
2-M09	4340	BRAKE MASTER CYLINDER & POWER BRAKE (W/O TURBO)
2-C10	4340 A	BRAKE MASTER CYLINDER & POWER BRAKE (TURBO)
2-E10	4360	BRAKE PIPINGS (W/O TURBO)
2-G10	4360 A	BRAKE PIPINGS (TURBO)
2-J10	4370	ANTILOCK BRAKE SYSTEM (TURBO)
2-N10	4400	PARKING BRAKE SYSTEM
2-D11	4500	FUEL PIPINGS
2-H11	4600	CHANGE CONTROL SYSTEM (AT)

LO.NO	SEC.NO	SECTION NAME
3-C03	0900	KEY SETS
3-F03	5000	FRONT BUMPER
3-H03	5010	REAR BUMPER
3-J03	5020	HEAD LAMP CLEANER
3-L03	5030	WINDOW MOULDINGS
3-M03	5040	BODY MOULDINGS (COUPE)
3-E04	5060	SIDE PROTECTORS
3-I04	5100	HEAD LAMPS
3-J04	5103	HEAD LAMP RETRACTORS
3-N04	5105	FRONT COMBINATION LAMPS
3-G05	5110	REAR COMBINATION LAMPS
3-K05	5120	LICENSE LAMPS
3-M05	5125	INTERIOR LAMPS
3-N05	5130	OVERHEAD CONSOLE
3-C06	5170	ORNAMENTS
3-D06	5180	COWL & EXTRACTOR GRILLES
3-G06	5230	BONNET
3-J06	5260	TRUNK LID (CONVERTIBLE)
3-L06	5310	BODY PANELS (FRONT) (COUPE)
3-C07	5310 A	BODY PANELS (FRONT) (CONVERTIBLE)
3-F07	5320	BODY PANELS (FENDER & WHEEL APRON)
3-K07	5330	BODY PANELS (DASH & COWL PANEL)
3-L07	5340	BODY PANELS (SIDE) (COUPE)
3-E08	5340A	BODY PANELS (SIDE) (CONVERTIBLE)
3-K08	5360	BODY PANELS (ROOF) (W/O SUN ROOF)
3-L08	5360 A	BODY PANELS (ROOF) (SUN ROOF)
3-M08	5370	BODY PANELS (FLOOR) (COUPE)
3-D09	5370 A	BODY PANELS (FLOOR) (CONVERTIBLE)
3-H09	5380	FLOOR ATTACHMENTS (HOLE COVERS)
3-J09	5390	FLOOR ATTACHMENTS
3-C10	5500	DASHBOARD EQUIPMENTS
3-F10	5520	METER HOOD
3-G10	5530	SPEEDOMETER CABLE
3-H10	5540	METER COMPONENTS
3-J10	5560	DASHBOARD & RELATED PARTS
3-E11	5570	CONSOLE
3-H11	5580	VENTILATOR
3-J11	5700	FRONT SEATS (COUPE)
3-E13	5700A	FRONT SEATS (CONVERTIBLE)
3-K13	5750	REAR SEATS (COUPE)
3-M13	5790	SEAT BELTS (COUPE)
3-C14	5790A	SEAT BELTS (CONVERTIBLE)
3-D14	5800	FRONT DOORS (COUPE)
3-G14	5800A	FRONT DOORS (CONVERTIBLE)
3-K14	5830	FRONT DOOR MECHANISMS (COUPE)
3-F15	5830A	FRONT DOOR MECHANISMS (CONVERTIBLE)
3-J15	5840	FRONT DOOR TRIMS & RELATED PARTS (COUPE)
3-H16	5840A	FRONT DOOR TRIMS & RELATED PARTS (CONVERTIBLE)

SECTION NAME INDEX (BODY)2/2

LO.NO	SEC.NO	SECTION NAME
4-C03	6100	HEATER
4-E03	6110	HEATER UNIT COMPONENTS
4-F03	6115	HEATER CONTROLS COMPONENTS
4-G03	6120	HEATER BLOWER COMPONENTS
4-I03	6130	AIR CONDITIONER
4-J03	6230	LIFT GATE MECHANISMS (COUPE)
4-M03	6300	WINDOW GLASSES (COUPE)
4-N03	6300A	WINDOW GLASSES (CONVERTIBLE)
4-C04	6330	SUNROOF (COUPE)
4-G04	6330A	SUNROOF (CONVERTIBLE)
4-M04	6600	SWITCHES & RELAYS (ENGINE)
4-G05	6610	DASHBOARD SWITCHES
4-H05	6611	COMBINATION SWITCH
4-I05	6612	CLUSTER SWITCH
4-L05	6615	POWER WINDOW SWITCHES
4-M05	6630	RELAYS & UNIT (BODY)
4-D06	6635	DOOR SWITCH & HORNS
4-E06	6640	AUTO CRUISE CONTROL SYSTEM
4-F06	6680	AUDIO SYSTEMS (RADIO & TAPE DECK) (COUPE)
4-K06	6680 A	AUDIO SYSTEMS (RADIO & TAPE DECK) (CONVERTIBLE)
4-M06	6682	AUDIO SYSTEMS (ANTENNA & SPEAKER) (COUPE)
4-D07	6682 A	AUDIO SYSTEMS (ANTENNA & SPEAKER) (CONVERTIBLE)
4-G07	6684	AUDIO SYSTEMS(NOISE SUPPRESSOR & EARTH CORD)
4-H07	6700	WIRING HARNESSES(FRONT & REAR)
4-N07	6701	WIRING HARNESSES(ENGINE & T/MISSION)
4-D08	6702	WIRING HARNESSES(DASHBOARD)
4-E08	6703	WIRING HARNESSES(DOOR,FLOOR/CEILING)
4-G08	6704	WIRING HARNESS CLAMPS
4-J08	6720	WINDSHIELD WASHER (1.5L & 2.5L)
4-L08	6720 A	WINDSHIELD WASHER (5.7L)
4-N08	6730	WINDSHIELD WIPERS
4-C09	6740	WIPER MOTOR COMPONENTS(FRONT)
4-D09	6750	WINDOW WIPER & WASHER (REAR)
4-G09	6760	WINDOW WIPER MOTOR COMPONENTS (REAR)
4-H09	6800	CEILING TRIMS (COUPE)
4-J09	6800A	CEILING TRIMS (CONVERTIBLE)
4-K09	6810	ROLLEBAR (CONVERTIBLE)
4-N09	6820	PILLAR TRIMS (COUPE)
4-F10	6820A	PILLAR TRIMS (CONVERTIBLE)
4-G10	6840	TRIMS & SCUFF PLATES (COUPE)
4-L10	6840A	TRIMS & SCUFF PLATES (CONVERTIBLE)
4-N10	6845	STRAGE BOX (COUPE) (GXL,TURBO)
4-D11	6860	FLOOR MATS & PADS (COUPE)
4-K11	6860A	FLOOR MATS & PADS (CONVERTIBLE)
4-C12	6870	SERVICE TOOLS
4-D12	6900	VISORS,ASSIST HANDLES & MIRRORS (COUPE)
4-H12	6900A	VISORS,ASSIST HANDLES & MIRRORS (CONVERTIBLE)
4-K12	6930	CAUTION PLATES & LABELS
4-N12	7250	QUARTER WINDOW & TRIMS
4-E13	7800	SPOILERS & RELATED PARTS
4-C14	7900	ACCESSORIES

LO.NO	SEC.NO	SECTION NAME
4-C03	6100	HEATER
4-E03	6110	HEATER UNIT COMPONENTS
4-F03	6115	HEATER CONTROLS COMPONENTS
4-G03	6120	HEATER BLOWER COMPONENTS
4-I03	6130	AIR CONDITIONER
4-J03	6230	LIFT GATE MECHANISMS (COUPE)
4-M03	6300	WINDOW GLASSES (COUPE)
4-N03	6300A	WINDOW GLASSES (CONVERTIBLE)
4-C04	6330	SUNROOF (COUPE)
4-G04	6330A	SUNROOF (CONVERTIBLE)
4-M04	6600	SWITCHES & RELAYS (ENGINE)
4-G05	6610	DASHBOARD SWITCHES
4-H05	6611	COMBINATION SWITCH
4-I05	6612	CLUSTER SWITCH
4-L05	6615	POWER WINDOW SWITCHES
4-M05	6630	RELAYS & UNIT (BODY)
4-D06	6635	DOOR SWITCH & HORNS
4-E06	6640	AUTO CRUISE CONTROL SYSTEM
4-F06	6680	AUDIO SYSTEMS (RADIO & TAPE DECK) (COUPE)
4-K06	6680 A	AUDIO SYSTEMS (RADIO & TAPE DECK) (CONVERTIBLE)
4-M06	6682	AUDIO SYSTEMS (ANTENNA & SPEAKER) (COUPE)
4-D07	6682 A	AUDIO SYSTEMS (ANTENNA & SPEAKER) (CONVERTIBLE)
4-G07	6684	AUDIO SYSTEMS(NOISE SUPPRESSOR & EARTH CORD)
4-H07	6700	WIRING HARNESSES(FRONT & REAR)
4-N07	6701	WIRING HARNESSES(ENGINE & T/MISSION)
4-D08	6702	WIRING HARNESSES(DASHBOARD)
4-E08	6703	WIRING HARNESSES(DOOR,FLOOR/CEILING)
4-G08	6704	WIRING HARNESS CLAMPS
4-J08	6720	WINDSHIELD WASHER (1.5L & 2.5L)
4-L08	6720 A	WINDSHIELD WASHER (5.7L)
4-N08	6730	WINDSHIELD WIPERS
4-C09	6740	WIPER MOTOR COMPONENTS(FRONT)
4-D09	6750	WINDOW WIPER & WASHER (REAR)
4-[illegible]	6760	WINDOW WIPER MOTOR COMPONENTS (REAR)
4-H0[illegible]	6800	CEILING TRIMS (COUPE)
4-J09	6800A	CEILING TRIMS (CONVERTIBLE)
4-K09	6810	ROLLEBAR (CONVERTIBLE)
4-N09	6820	PILLAR TRIMS (COUPE)
4-F10	6820A	PILLAR TRIMS (CONVERTIBLE)
4-G10	6840	TRIMS & SCUFF PLATES (COUPE)
4-L10	6840A	TRIMS & SCUFF PLATES (CONVERTIBLE)
4-N10	6845	STRAGE BOX (COUPE) • (GXL,TURBO)
4-D11	6860	FLOOR MATS & PADS (COUPE)
4-K11	6860A	FLOOR MATS & PADS (CONVERTIBLE)
4-C12	6870	SERVICE TOOLS
4-D12	6900	VISORS,ASSIST HANDLES & MIRRORS (COUPE)
4-H12	6900A	VISORS,ASSIST HANDLES & MIRRORS (CONVERTIBLE)
4-K12	6930	CAUTION PLATES & LABELS
4-N12	7250	QUARTER WINDOW & TRIMS
4-E13	7800	SPOILERS & RELATED PARTS
4-C14	7900	ACCESSORIES

LO.NO	SEC.NO	SECTION NAME

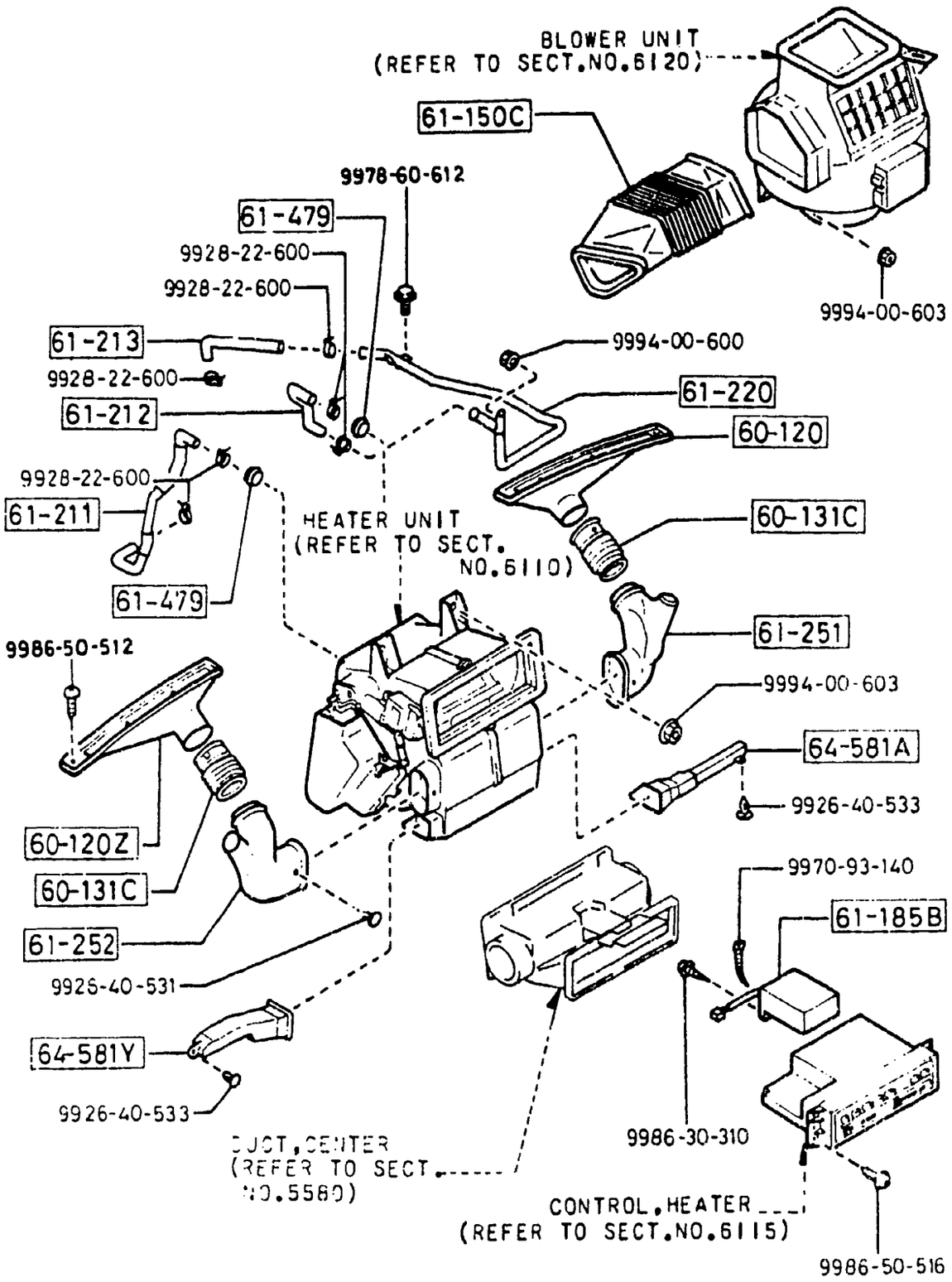

PART NO.	QTY	MODEL/RESTRICTION	MODEL/RESTRICTION	MODEL/RESTRICTION	FROM-TO
60-120		NOZZLE(R),DEFROSTER			
FB01-60-121B	1				
60-120Z		NOZZLE(L),DEFROSTER			
FB01-60-141B	1				
60-131C		DUCT,DEFROSTER			
FB01-61-256	2				
61-150C		DUCT,AIR			
FB01-61-150A	1	(W/O AIR CON.)			
61-185B		BOX,AMP-HEATER CONTROL			
FB01-61-185A	1				-9421
AN(FB01-61-185B)					
FB01-61-185B	1				9421-
61-211		HOSE NO.1,WATER			
FB01-61-211C	1	((W/O TURBO)>(AT)) (TURBO)			
FB03-61-211	1	((W/O TURBO)>(MT))			
61-212		HOSE NO.2,WATER			
FB01-61-212B	1				
61-213		HOSE NO.3,WATER			
FB01-61-213	1				
61-220		PIPE,HEATER			
FB01-61-220C	1	(W/O TURBO)			
FB44-61-220A	1	(TURBO)			
61-251		HOSE,DEFROSTER			
FB01-61-251A	1				
61-252		HOSE,DEFROSTER			
FB01-61-252	1				
61-479		GROMMET			
8871-61-219A	2				

9421 FC3###-706548

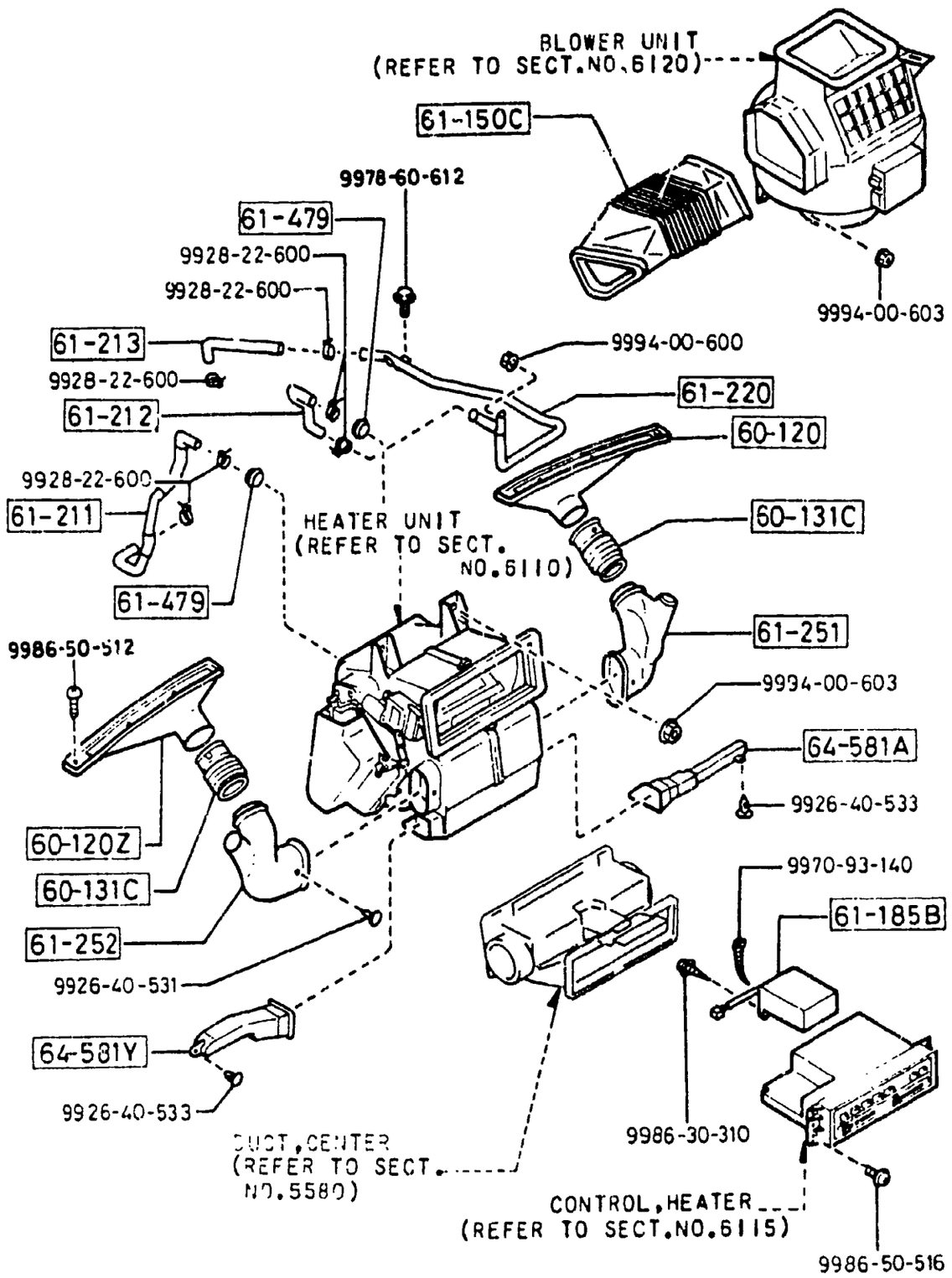

PART NO.	QTY	MODEL/RESTRICTION	MODEL/RESTRICTION	MODEL/RESTRICTION	FROM-TO
64-581A		DUCT(R),SHOWER			
FB02-61-155C	1				
02		FD8 BLACK			
19		FE0 RED			
48		FD9 BLUE			
64-581Y		DUCT(L),SHOWER			
FB02-61-156B	1				

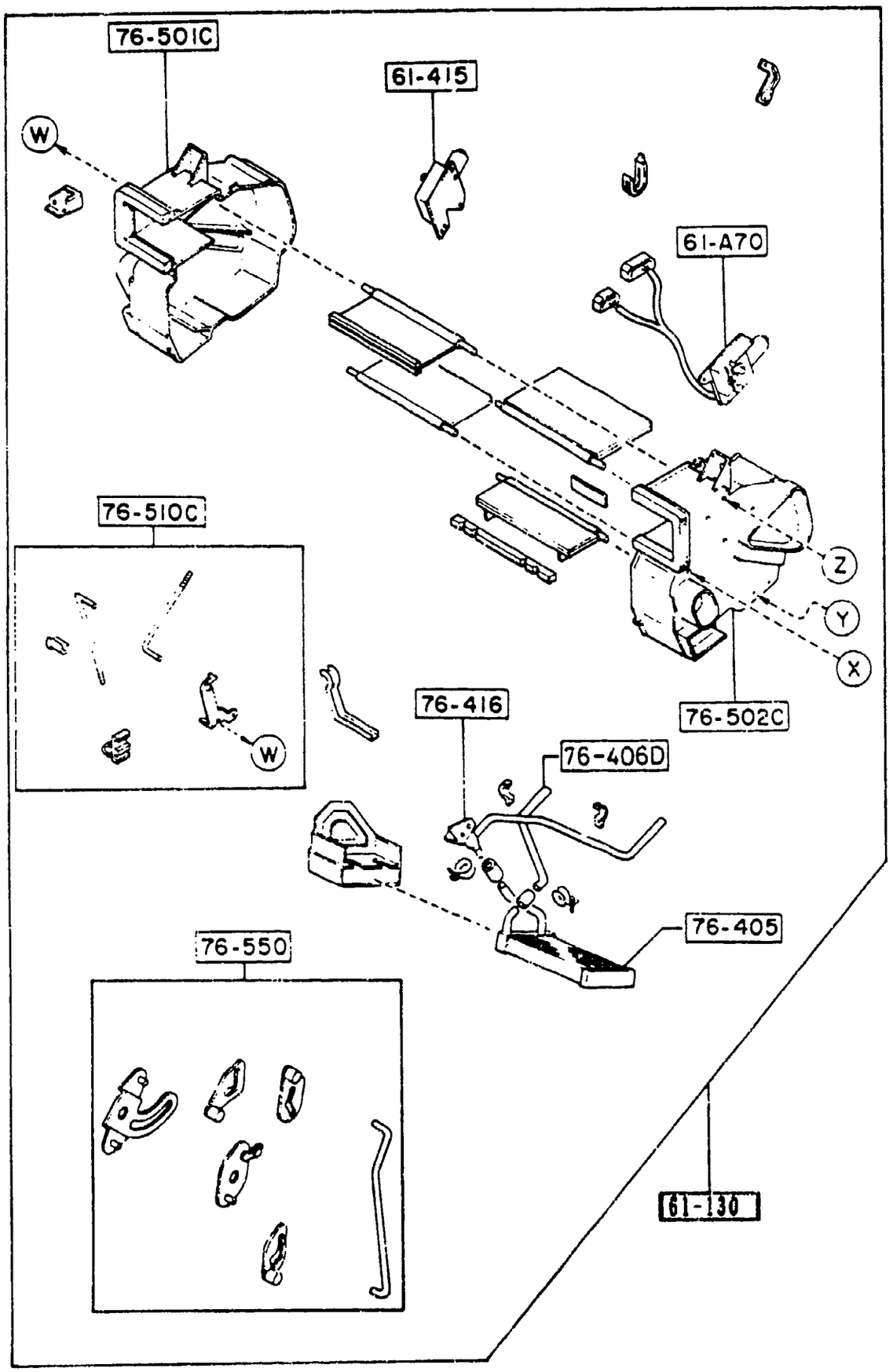

PART NO.	QTY	MODEL/RESTRICTION	MODEL/RESTRICTION	MODEL/RESTRICTION	FROM-TO
61-A70		ACTUATOR,MODE-HEATER UNIT			
FB01-61-A70A	1				
61-130		HEATER UNIT			
FB01-61-130A AN(FB01-61-130B)	1				-9801
FB01-61-130B AN(FB01-61-130C)	1				9801-9823
FB01-61-130C	1				9823-
61-415		ACTUATOR,TEMP			
FB01-61-A60A	1				
76-405		CORE,HEATER			
FB01-61-A10	1				
76-406D		PIPE,HEATER UNIT			
FB01-61-A15	1				
76-416		VALVE,WATER			
FB01-61-A40	1				
76-501C		CASE(R),HEATER UNIT			
FB01-61-A01	1				
76-502C		CASE(L),HEATER UNIT			
FB01-61-A02A	1				
76-510C		LINK SET,TEMP			
FB01-61-A20	1				
76-550		LINK SET,MODE			
FB01-61-A30A	1				

9801 FC3***-800894
9823 FC3***-801679

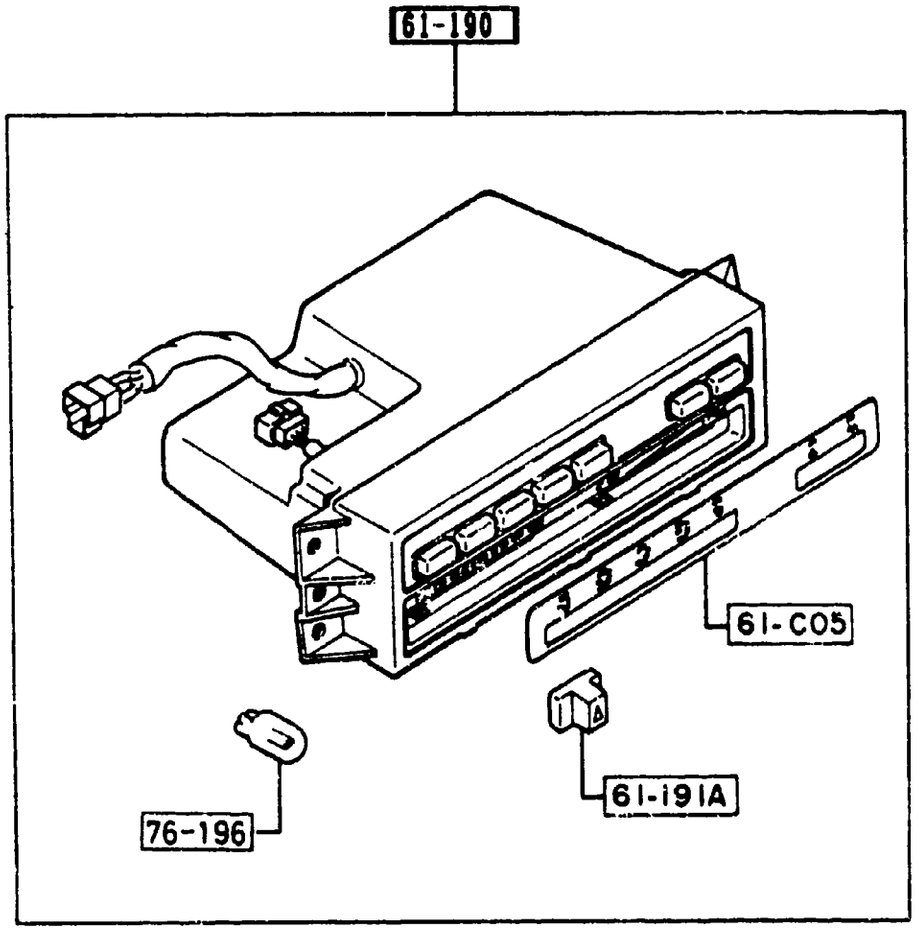

PART NO.	QTY	MODEL/RESTRICTION	MODEL/RESTRICTION	MODEL/RESTRICTION	FROM-TO
61-C05		FILM,PANEL-NO.1			
FC01-61-C05	1				
61-190		CONTROL,HEATER			
FC01-61-190 AN(FC01-61-190A)	1				-9421
FC01-61-190A AN(FC01-61-190B)	1				9421-9608
FC01-61-190B	1				9608-
61-191A		KNOB NO.1			
FB03-61-191	2				
76-196		BULB			
FA55-76-196	2				

9421 FC3****-706548
9608 FC3****-708308

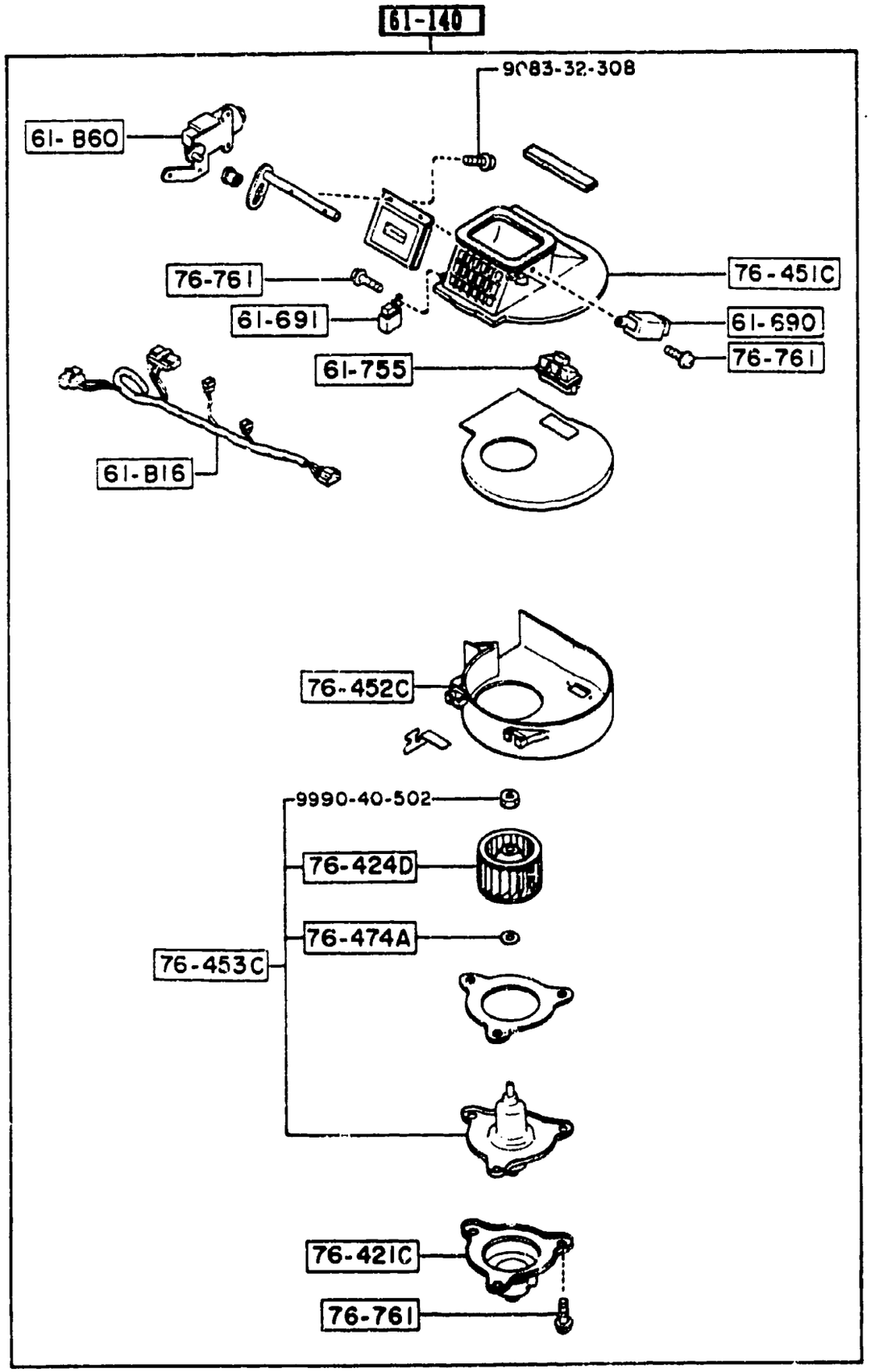

PART NO.	QTY	MODEL/RESTRICTION	MODEL/RESTRICTION	MODEL/RESTRICTION	FROM-TO
61-B16		HARNESS,BLOWER UNIT			
FC01-61-B16	1	((W/O TURBO))(MT))			
FC07-61-B16	1	((W/O TURBO))(AT)) (TURBO)			
61-B60		ACTUATOR,RECYCLE & FRESH			
FB01-61-B60	1				
61-14		BLOWER UNIT			
FC01-61-140	1	((W/O TURBO))(MT))			
FC07-61-140	1	((W/O TURBO))(AT)) (TURBO)			
61-69		RELAY			
FB03-61-691	1	W/IG.RELAY BLOWER ((W/O TURBO))(AT)) (TURBO)			
61-691		RELAY			
FB02-61-691	1				
61-755		TRANSISTOR,POWER			
FB01-61-769	1				
76-421C		COVER,MOTOR			
UB39-61-B40	1				
76-424D		FAN,MOTOR			
8871-76-456	1				
76-451C		CASE(R),BLOWER			
FB01-61-B01	1				
76-432C		CASE(L),BLOWER			
FB01-61-B02A	1				
76-453C		MOTOR,BLOWER			
UB94-61-B10	1				
76-474A		WASHER,PLAIN			
FA55-76-474	1				

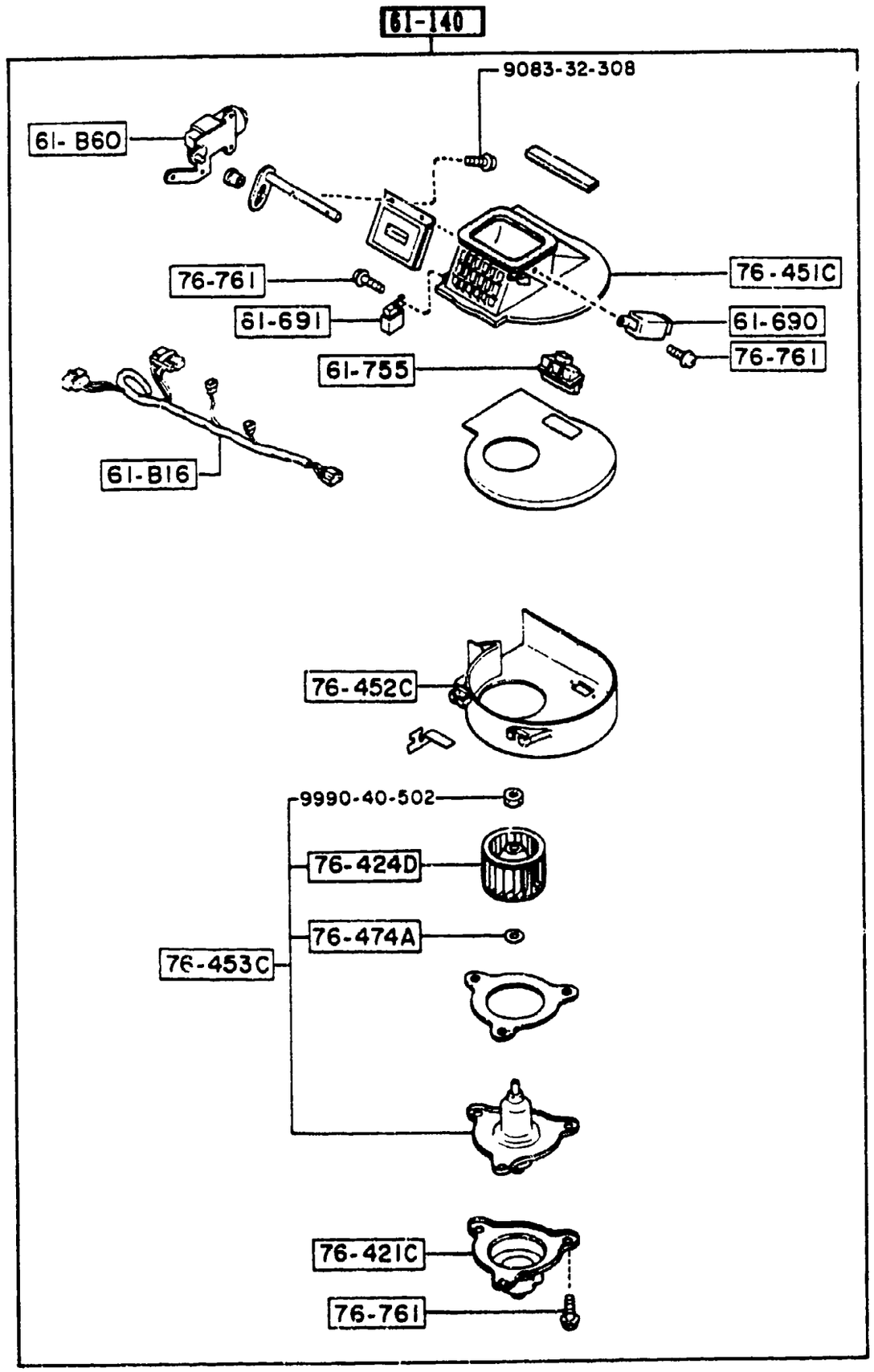

PART NO.	QTY	MODEL/RESTRICTION	MODEL/RESTRICTION	MODEL/RESTRICTION	FROM-TO
76-761		SCREW			
FA5U-76-455	5				

4 H 3

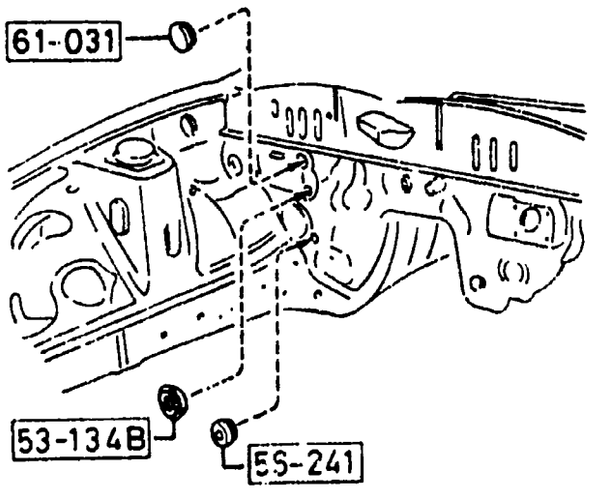

PART NO.	QTY	MODEL/RESTRICTION	MODEL/RESTRICTION	MODEL/RESTRICTION	FROM-TO
53-134B		RUBBER,DUST SEAL			
0187-53-134	1				
56-241		PLUG,DRAIN			
0118-56-241	1				
61-031		PLUG,HOLE			
1708-61-031	1				

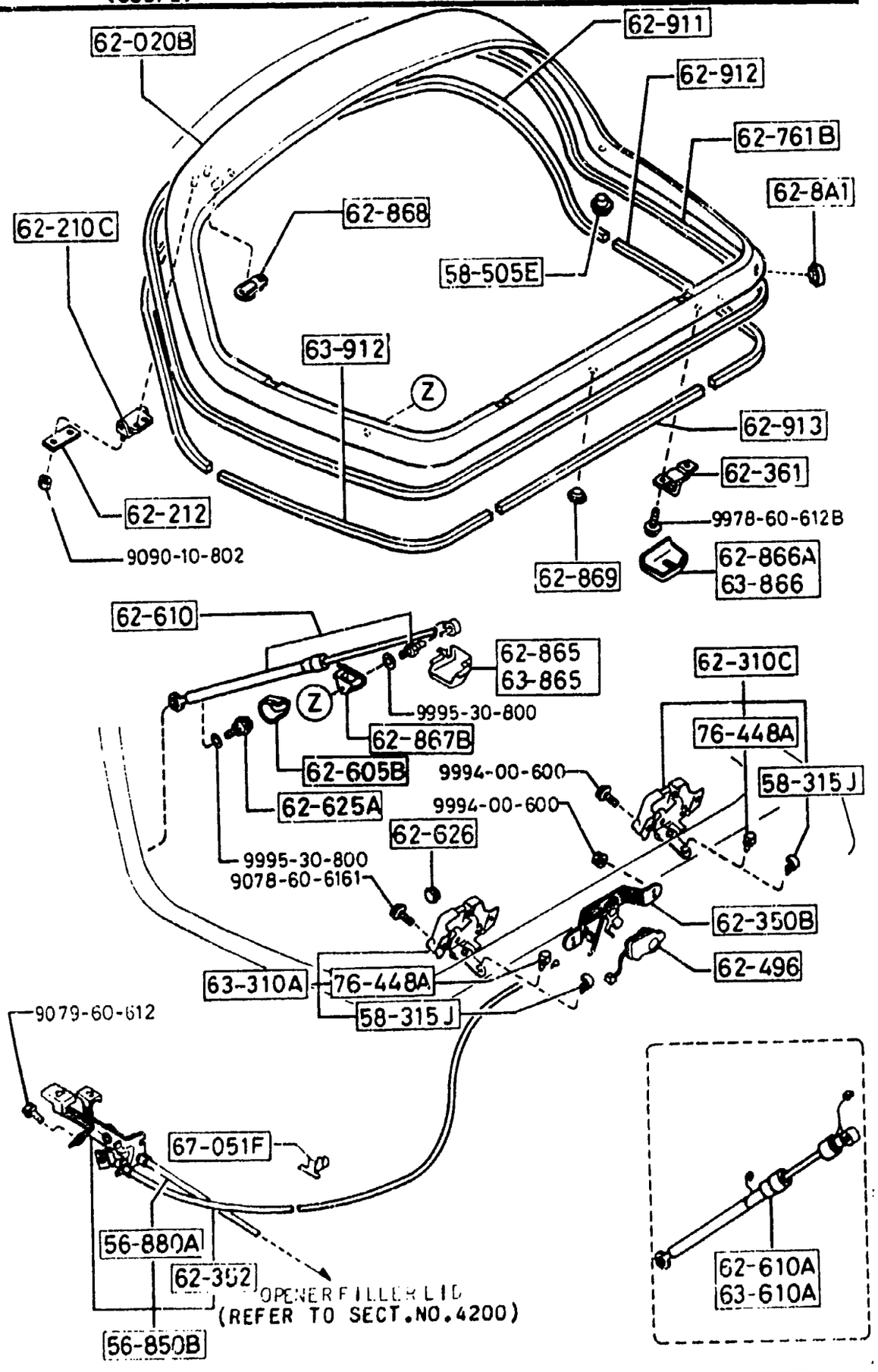

PART NO.	QTY	MODEL/RESTRICTION	MODEL/RESTRICTION	MODEL/RESTRICTION	FROM-TO
56-850B		OPENER,L/GATE & F/LID			
FB02-56-850D A (FB02-56-850E)	1				-9804
FB02-56-850E	1				9804-
56-880A		CABLE,F/LID OPENER			
FB01-56-870B	1				
58-315J		CLIP			
H001-58-315	2				
58-505E		CAP			
B092-58-355	2				
62-020B		FRAME,GLASS HATCH			
FC01-62-020	1	W/O WIPER GTU, GTUS, (W/O RR WIPER)			
FC02-62-020	1	W/WIPER GXL, TURBO, (W/RR WIPER)			
62-210C		HINGE,GLASS HATCH			
FB01-62-210A A (FB01-62-210C)	2				-9801
FB01-62-210C	2				9801-
62-212		GASKET,HINGE-LIFT GATE			
FB01-62-212	2				
62-310C		LOCK(R),GLASS HATCH			
FB01-62-310D	1				
62-350B		UNIT,OPENER-GLASS HATCH			
FB01-62-350D A (FB01-62-350E)	1				-0403
FB01-62-350E	1				0403-
62-352		CABLE,OPENER			
FB01-56-880B A (FB01-56-880C)	1				-9804
FB01-56-880C	1	USA, (W/LID OPENER)			9804-

9801 FC3****-800894
9804 FC3****-801104
0403 FC3****-806598

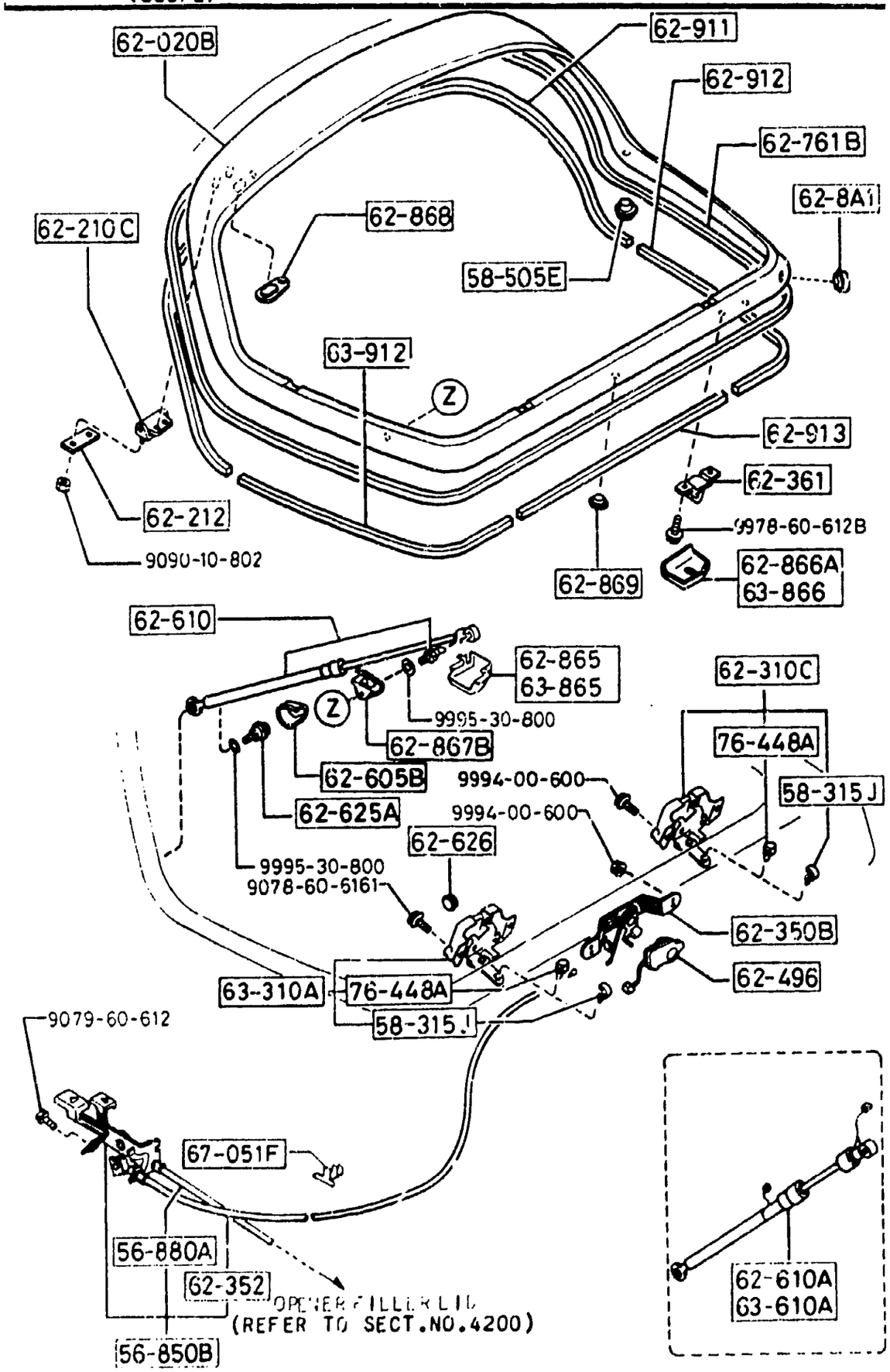

PART NO.	QTY	MODEL/RESTRICTION	MODEL/RESTRICTION	MODEL/RESTRICTION	FROM-TO
62-361		STRIKER,LOCK			
FB01-62-361B	2				
62-496		SWITCH,LOCK CYLINDER			
FB02-62-496A	1	USA, (W/BURGLAR ALARM)			
62-605B		COVER,DAMPER STAY			
FB01-62-615	2				
62-610		STAY,DAMPER			
8BF1-62-620A		W/O WIPER & R.LAMP H			-9201
A (8BF1-62-620B)	1				
8BF1-62-620B	1	(FOR LEFT) (W/O A.A.SUSP)			9201-
62-610A		STAY(R),DAMPER			
8BF7-62-620	1				
62-625A		BOLT,BRACKET-STAY DAMPER			
FB01-62-625	2				
62-626		PLUG,HOLE-LAMP & WIP.HARN			
FB01-62-626	1	GXL, TURBO, (W/RR WIPER)			
	2	GTU, GTUS, (W/O RR WIPER)			
62-761B		WEATHERSTRIP,GLASS HATCH			
FB01-62-761C	1				
62-8A1		PLUG,HOLE-HATCH FRAME LOW			
FB01-62-8A1A	2				
62-865		COVER'A'(R),FRAME-G.HATCH			
FB01-62-865A	1				
62-866A		COVER'B'(R),FRAME-G.HATCH			
FB01-62-866B	1				
62-867B		COVER,BRACKET-DAMPER STAY			
FB01-62-867A	2				

9201 FC3####-701886

6230 -3 M LIFT GATE MECHANISMS
(COUPE)

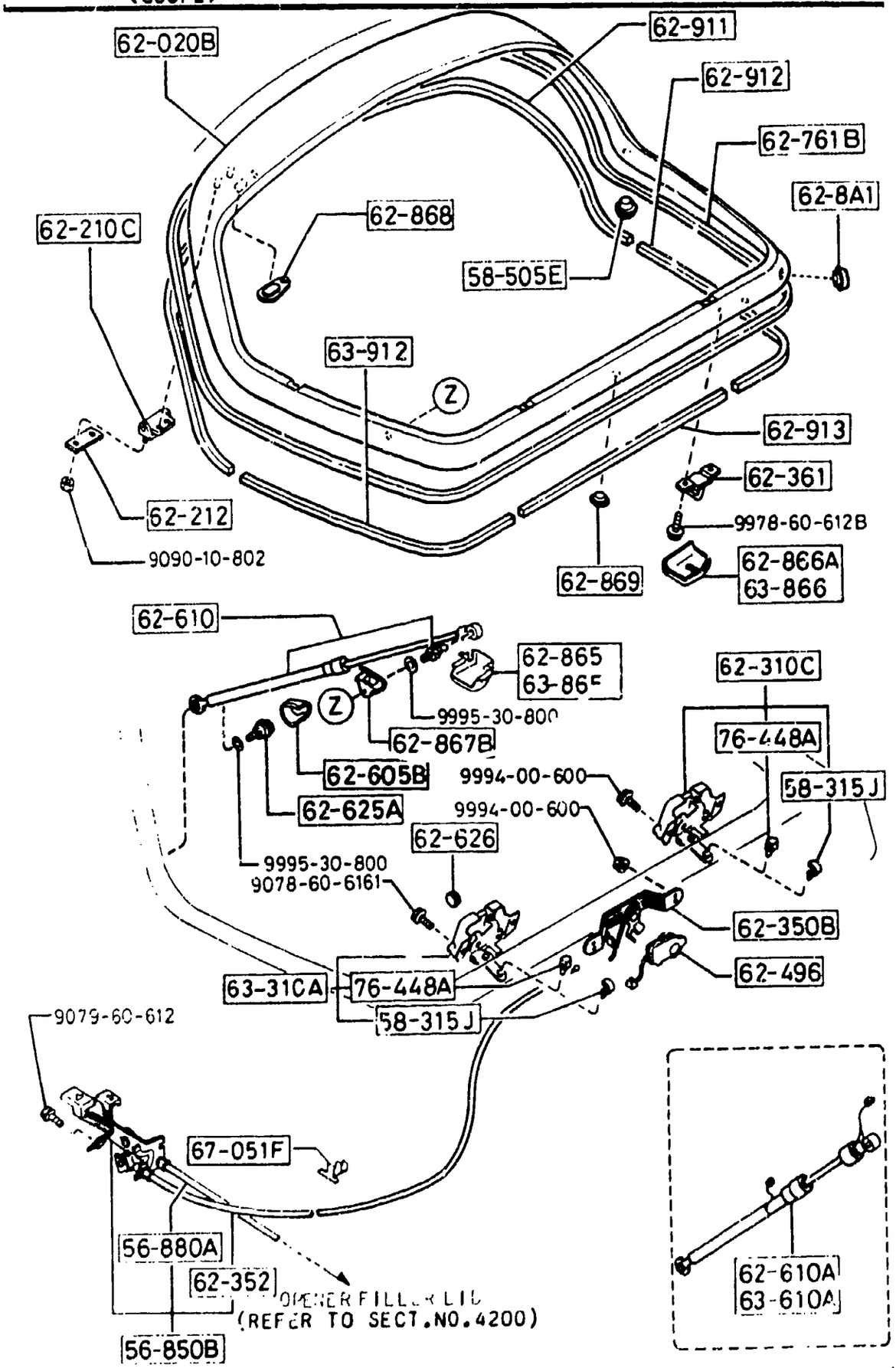

PART NO.	QTY	MODEL/RESTRICTION	MODEL/RESTRICTION	MODEL/RESTRICTION	FROM-TO
62-868		PLUG,HOLE-HATCH FRAME UP.			
FB01-62-868	2				
62-869		PLUG,HOLE-HATCH FRAME LOW			
FB01-62-869	1				
62-911		WELT,SEAMING-GLS HATCH UP			
FB01-62-911C	1				
62-912		WELT(R),SEAMING-GLS HATCH			
FB01-62-912B	1				
62-913		WELT,SERMING-GLS HATCH LW			
FB01-62-913C	1	GTU, GTUS, (W/O RR WIPER)			
FB02-62-913B	1	GXL, TURBO, (W/RR WIPER)			
63-310A		LOCK(L),GLASS HATCH			
FB01-63-310E	1				
63-610A		STAY(L),DAMPER			
8BF3-63-620	1	(A.A.SUSP)			
63-865		COVER'A'(L),FRAME-G. HATCH			
FB01-63-865A	1				
63-866		COVER'B'(L),FRAME-G. HATCH			
FB01-63-866B	1				
63-912		WELT(L),SEAMING-GLS HATCH			
FB01-63-912C	1	GTU, GTUS, (W/O RR WIPER)			
FB02-63-912B	1	GXL, TURBO, (W/RR WIPER)			
67-051F		CLIP			
FB01-67-051	1				
76-448A		CLIP			
G030-76-448	2				

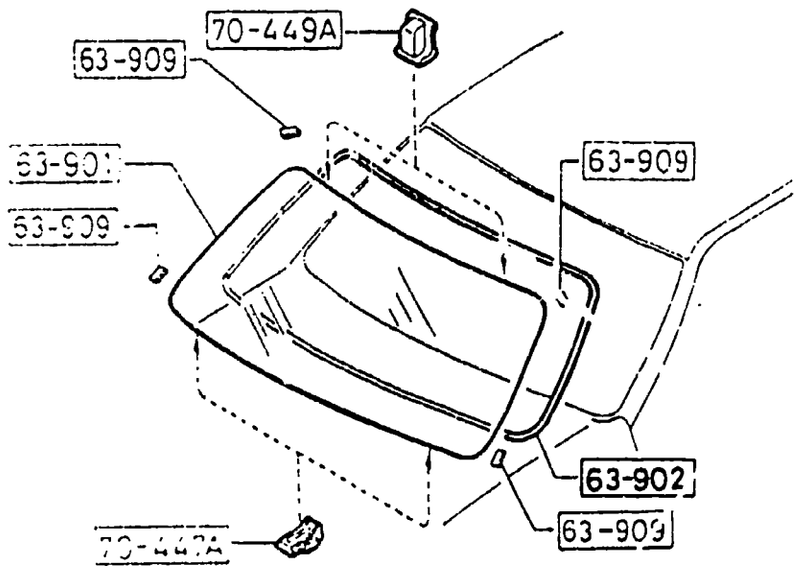

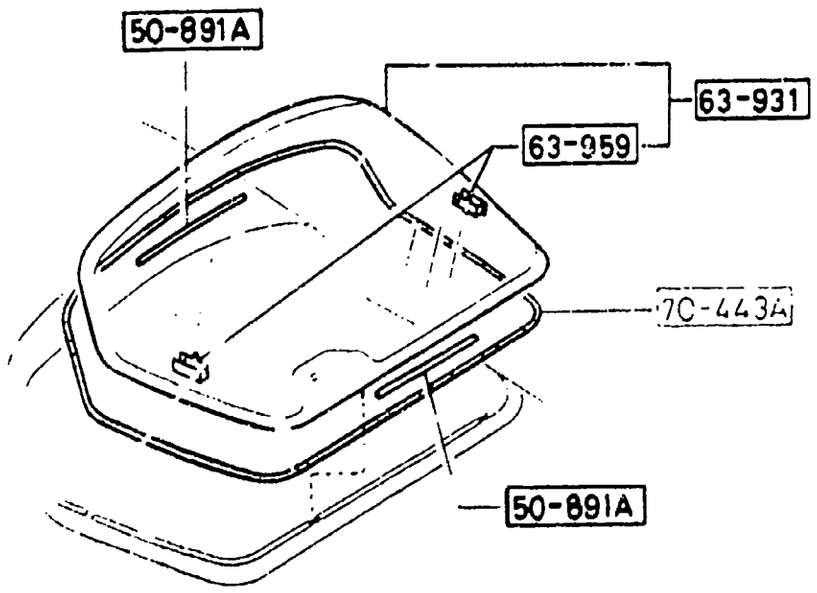

PART NO.	QTY	MODEL/RESTRICTION	MODEL/RESTRICTION	MODEL/RESTRICTION	FROM-TO
50-891A		SPACER,WINDOW			
FB01-50-891	2				
63-901		GLASS,WINDSHIELD			
FC02-63-901	1				
63-902		DAM,FRT.WSHLD GLASS			
FB01-50-895A	1				
63-909		SPACER			
8182-63-903	4				
63-931		GLASS,BACK WINDOW			
FB01-63-930	1	BLUE GTU, GTUS, (W/O RR WIPER)			
FB02-63-930	1	BLUE GXL, TURBO, (W/PR WIPER)			
63-959		TERMINAL,BACK WINDOW GLAS			
FB01-63-959	2				
70-443A		DAM,RR.WINDOW GLASS			
FB01-50-896	1				
70-447A		SPACER'A'			
FB01-50-893	2				
70-449A		SPACER'C'			
FB01-50-897	2				

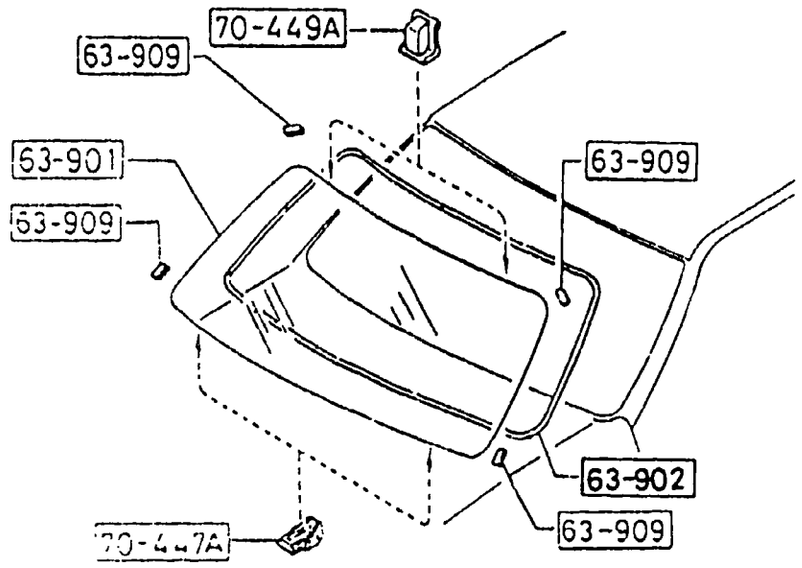

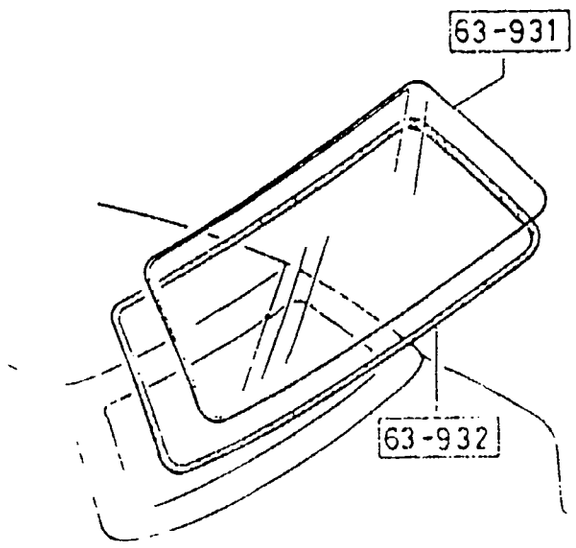

6300A -1 * WINDOW GLASSES
(CONVERTIBLE)

PART NO.	QTY	MODEL/RESTRICTION	MODEL/RESTRICTION	MODEL/RESTRICTION	FROM-TO
63-901		GLASS,WINDSHIELD			
FB03-63-901E	1				
63-902		DAM,FRT.WSHLD GLASS			
FB67-50-894	1				
63-909		SPACER			
8182-63-903	4				
63-931		GLASS,BACK WINDOW			
FB67-63-931A	1	BLUE			
63-932		WEATHERSTRIP,RR.WIND			
FB67-63-932B	1				
70-447A		SPACER'A'			
FB01-50-893	2				
70-449A		SPACER'C'			
FB01-50-897	2				

LO.NO	SEC.NO	SECTION NAME
4-C03	6100	HEATER
4-E03	6110	HEATER UNIT COMPONENTS
4-F03	6115	HEATER CONTROLS COMPONENTS
4-G03	6120	HEATER BLOWER COMPONENTS
4-I03	6130	AIR CONDITIONER
4-J03	6230	LIFT GATE MECHANISMS (COUPE)
4-M03	6300	WINDOW GLASSES (COUPE)
4-N03	6300A	WINDOW GLASSES (CONVERTIBLE)
4-C04	6330	SUNROOF (COUPE)
4-G04	6330A	SUNROOF (CONVERTIBLE)
4-M04	6600	SWITCHES & RELAYS (ENGINE)
4-G05	6610	DASHBOARD SWITCHES
4-H05	6611	COMBINATION SWITCH
4-I05	6612	CLUSTER SWITCH
4-L05	6615	POWER WINDOW SWITCHES
4-M05	6630	RELAYS & UNIT (BODY)
4-D06	6635	DOOR SWITCH & HORNS
4-E06	6640	AUTO CRUISE CONTROL SYSTEM
4-F06	6680	AUDIO SYSTEMS (RADIO & TAPE DECK) (COUPE)
4-K06	6680 A	AUDIO SYSTEMS (RADIO & TAPE DECK) (CONVERTIBLE)
4-M06	6682	AUDIO SYSTEMS (ANTENNA & SPEAKER) (COUPE)
4-D07	6682 A	AUDIO SYSTEMS (ANTENNA & SPEAKER) (CONVERTIBLE)
4-G07	6684	AUDIO SYSTEMS(NOISE SUPPRESSOR & EARTH CORD)
4-H07	6700	WIRING HARNESSES(FRONT & REAR)
4-N07	6701	WIRING HARNESSES(ENGINE & T/MISSION)
4-D08	6702	WIRING HARNESSES(DASHBOARD)
4-E08	6703	WIRING HARNESSES(DOOR,FLOOR/CEILING)
4-G08	6704	WIRING HARNESS CLAMPS
4-J08	6720	WINDSHIELD WASHER (1.5L & 2.5L)
4-L08	6720 A	WINDSHIELD WASHER (5.7L)
4-N08	6730	WINDSHIELD WIPERS
4-C09	6740	WIPER MOTOR COMPONENTS(FRONT)
4-D09	6750	WINDOW WIPER & WASHER (REAR)
4-G09	6760	WINDOW WIPER MOTOR COMPONENTS (REAR)
4-H09	6800	CEILING TRIMS (COUPE)
4-J09	6800A	CEILING TRIMS (CONVERTIBLE)
4-	6810	ROLLEBAR (CONVERTIBLE)
4-N09	6820	PILLAR TRIMS (COUPE)
4-F10	6820A	PILLAR TRIMS (CONVERTIBLE)
4-G10	6840	TRIMS & SCUFF PLATES (COUPE)
4-L10	6840A	TRIMS & SCUFF PLATES (CONVERTIBLE)
4-N10	6845	STRAGE BOX (COUPE) • (GXL,TURBO)
4-D11	6860	FLOOR MATS & PADS (COUPE)
4-K11	6860A	FLOOR MATS & PADS (CONVERTIBLE)
4-C12	6870	SERVICE TOOLS
4-D12	6900	VISORS,ASSIST HANDLES & MIRRORS (COUPE)
4-H12	6900A	VISORS,ASSIST HANDLES & MIRRORS (CONVERTIBLE)
4-K12	6930	CAUTION PLATES & LABELS
4-N12	7250	QUARTER WINDOW & TRIMS
4-E13	7800	SPOILERS & RELATED PARTS
4-C14	7900	ACCESSORIES

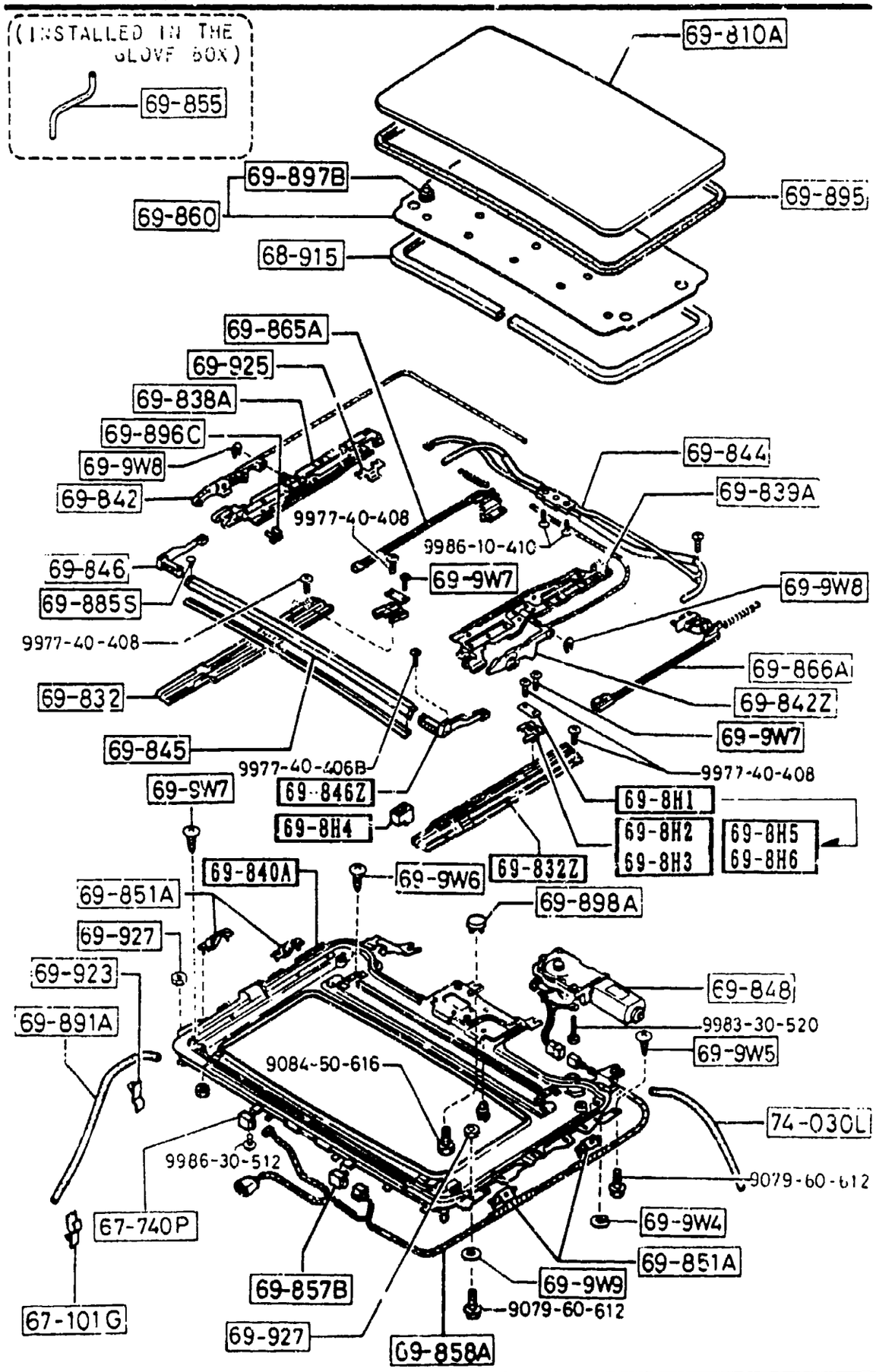

6330 -1 SUNROOF (COUPE)

PART NO.	QTY	MODEL/RESTRICTION	MODEL/RESTRICTION	MODEL/RESTRICTION	FROM-TO
67-101G		CLIP,DRAIN HOSE-FRONT			
FB03-69-928	4				
67-740P		RELAY,SLIDE ROOF			
FB03-69-873	1				
68-915		WELT,SEAMING			
FB03-69-915A	1				
02		FD8 BLACK			
19		FE0 RED			
48		FD9 BLUE			
69-8H1		CLIP,TUBE-UPPER			
FB03-69-8H1	2				-9501
69-8H2		CLIP(R),TUBE-LOWER			
FB03-69-8H2A (FB03-69-8H2A)	1				-9501
FB03-69-8H2A	1				9501-
69-8H3		CLIP(L),TUBE-LOWER			
FB03-69-8H3A (FB03-69-8H3A)	1				-9501
FB03-69-8H3A	1				9501-
69-8H4		GASKET,TUBE-CLIP			
FB03-69-8H4	2				
69-8H5		CLIP(R),TUBE-UPPER			
FB03-69-8H5	1				9501-
69-8H6		CLIP(L),TUBE-UPPER			
FB03-69-8H6	1				9501-
69-810A		PANEL,SLIDING ROOF			
FB03-69-810H	1				
69-832		RAIL(R),GUIDE			
FB03-69-832A (FB03-69-832B)	1				-9501
FB03-69-832B	1				9501-0701

9501 FC3***-707092
0701 FC3***-807120

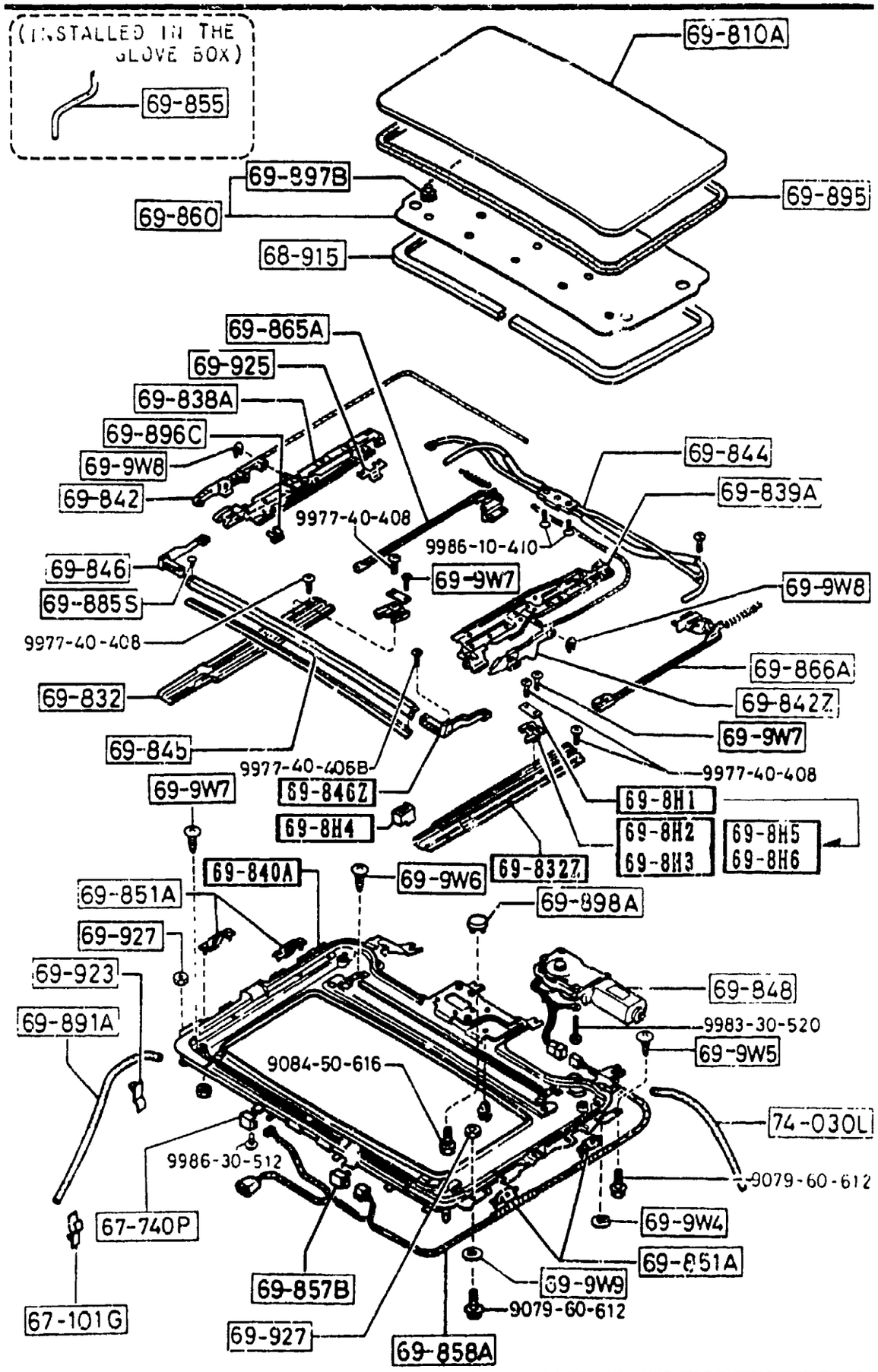

PART NO.	QTY	MODEL/RESTRICTION	MODEL/RESTRICTION	MODEL/RESTRICTION	FROM-TO
CONT'D					
A (FB03-69-832C)					
FB03-69-832C	1				0701-
69-832Z		RAIL(L),GUIDE			
FB03-69-833A	1				-9501
A (FB03-69-833B)					
FB03-69-833B	1				9501-0701
A (FB03-69-833C)					
FB03-69-833C	1				0701-
69-838A		PANEL(R),LOWER-SLDG ROOF			
FB03-69-838C	1				
69-839A		PANEL(L),LOWER-SLDG ROOF			
FB03-69-83[illegible]	1				
69-840A		FRAME,SLIDING ROOF			
FB03-69-831J	1				
69-842		GUIDE(R),REAR			
FB03-69-842A	1				
69-842Z		GUIDE(L),REAR			
FB03-69-843A	1				
69-844		UNIT,DRIVE			
FB03-69-844A	1				
69-845		DEFLECTOR			
FB03-69-845	1				
69-846		LINK(R),DEFLECTOR			
FB03-69-846B	1				
69-846Z		LINK(L),DEFLECTOR			
FB03-69-847B	1				
69-848		MOTOR,SLIDING ROOF			
FB03-69-848A	1				-0110
A (FB03-69-848B)					
FB03-69-848B	1				0110-

9501 FC3***-707092
0110 FC3***-805539
0701 FC3***-807120

AUFA02

CAT. AUFA02-06

1992-05

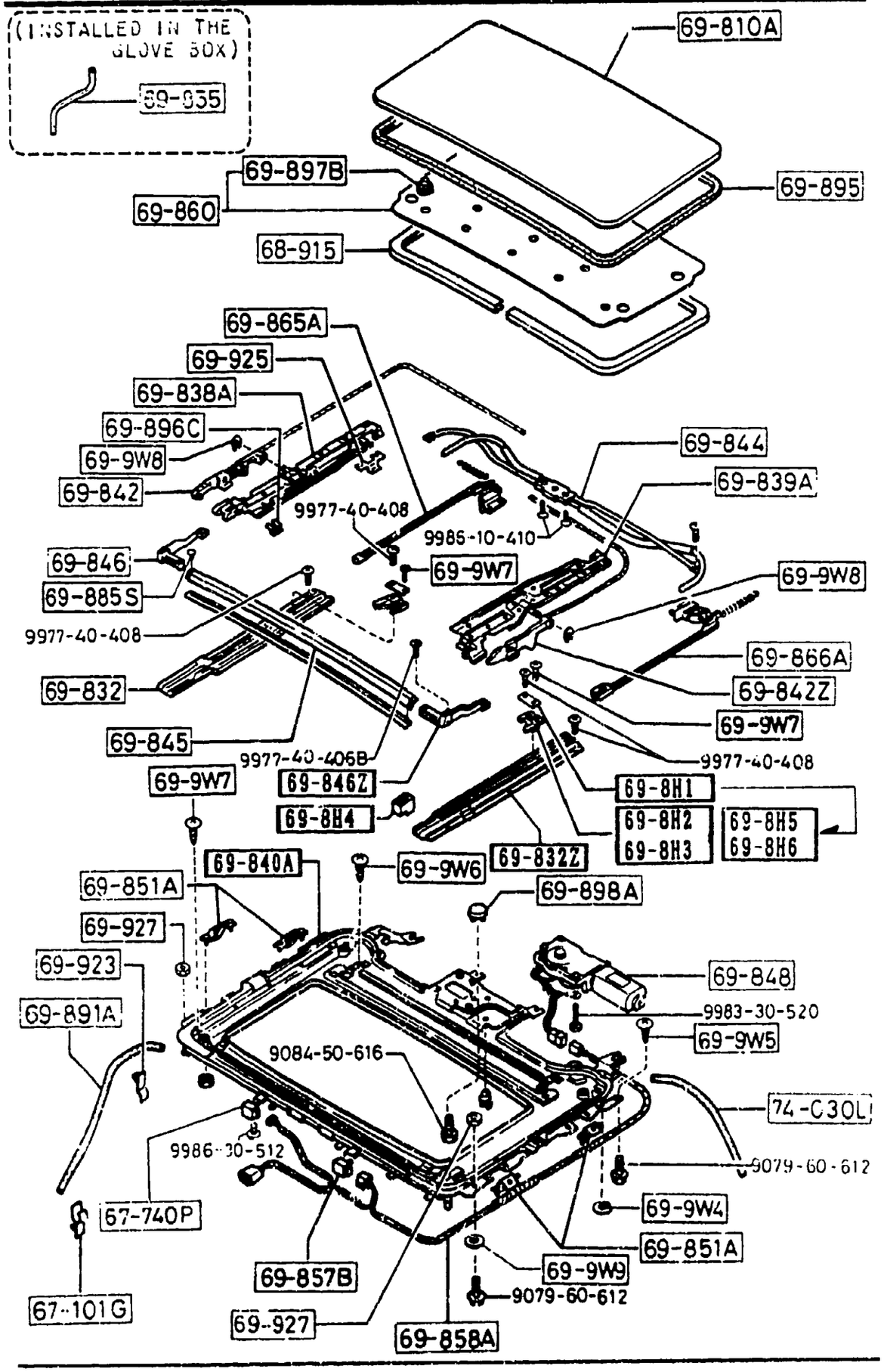

AUFA02

PART NO.	QTY	MODEL/RESTRICTION	MODEL/RESTRICTION	MODEL/RESTRICTION	FROM-TO
69-851A FB03-69-849	4	BRACKET,SET-S. ROOF FRAME			
69-855 FB03-69-982	1	HANDLE,SLIDING ROOF			
69-857B FB03-69-857A	1	RELAY,SLIDING ROOF			
69-858A FB03-69-858	1	HARNESS,SLIDING ROOF			
69-860 FB03-69-860C	1	TRIM,SLIDING ROOF			
02		FD8 BLACK			
19		FE0 RED			
48		FD9 BLUE			
69-865A FB03-69-865	1	SHUTTING(R),SLIDING ROOF			
69-866A FB03-69-866	1	SHUTTING(L),SLIDING ROOF			
69-885S FB03-69-885	2	CLIP,DEFLECTOR LINK			
69-891A FB03-69-891A	2	HOSE,DRAIN-SUN ROOF FRONT			
69-895 FB03-69-895B	1	WEATHERSTRIP,S/ROOF			
69-896C FB03-69-896A	6	SHIM,LOWER PANEL FRONT			
69-897B FB03-69-897	6	FASTENER,TRIM-SLIDE ROOF			
69-898A		COVER,MOTOR-SLIDING ROOF			

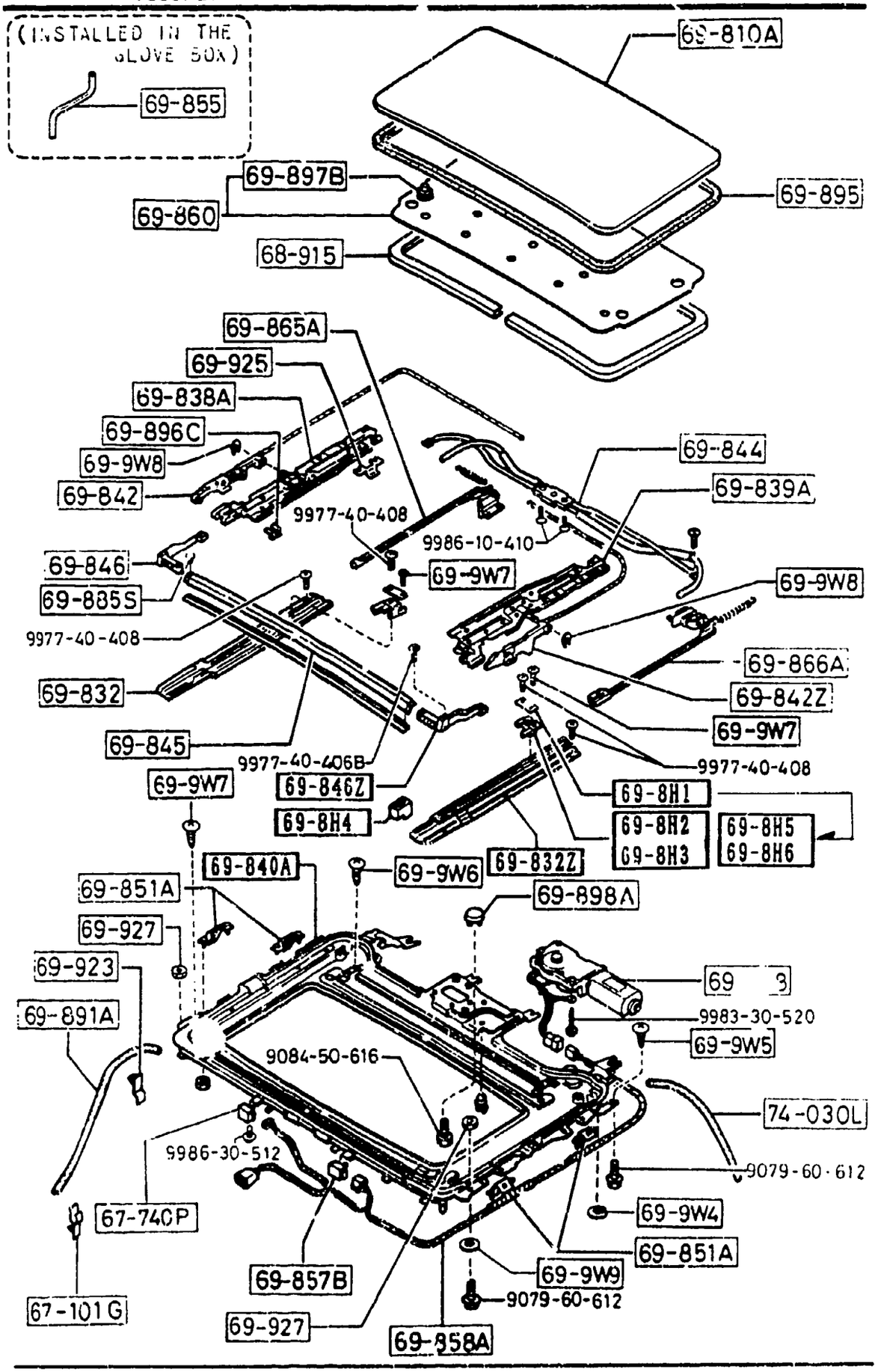

AUFA02

PART NO.	QTY	MODEL/RESTRICTION	MODEL/RESTRICTION	MODEL/RESTRICTION	FROM-TO
CONT'D FB03-69-898	1				
02		FD8 BLACK			
19		FE0 RED			
48		FD9 BLUE			
69-9W4		RING'A',SNAP-LOWER UNIT			
FB03-69-9W4	4				
69-9W5		SCREW,TAPPING-LOWER UNIT			
FB03-69-9W5	2				
69-9W6		SCREW'A',LOWER UNIT-S/R			
FB03-69-9W6	4				
69-9W7		SCREW'B',LOWER UNIT-S/R			
FB03-69-9W7	4				
69-9W8		RING'B',SNAP-LOWER UNIT			
FB03-69-9W8	2				
69-9W9		WASHER,LOWER UNIT-S/ROOF			
FB03-69-9W9	8				
69-923		CLIP,DRAIN HOSE-SUN ROOF			
FB03-69-923	2				
69-925		SHIM,LOWER PANEL REAR			
FB03-69-925A	4				
69-927		NUT,ADJUST-S/ROOF FRAME			
FB03-69-927	4				
74-030L		HOSE,DRAIN-REAR			
FB03-69-892A	2				

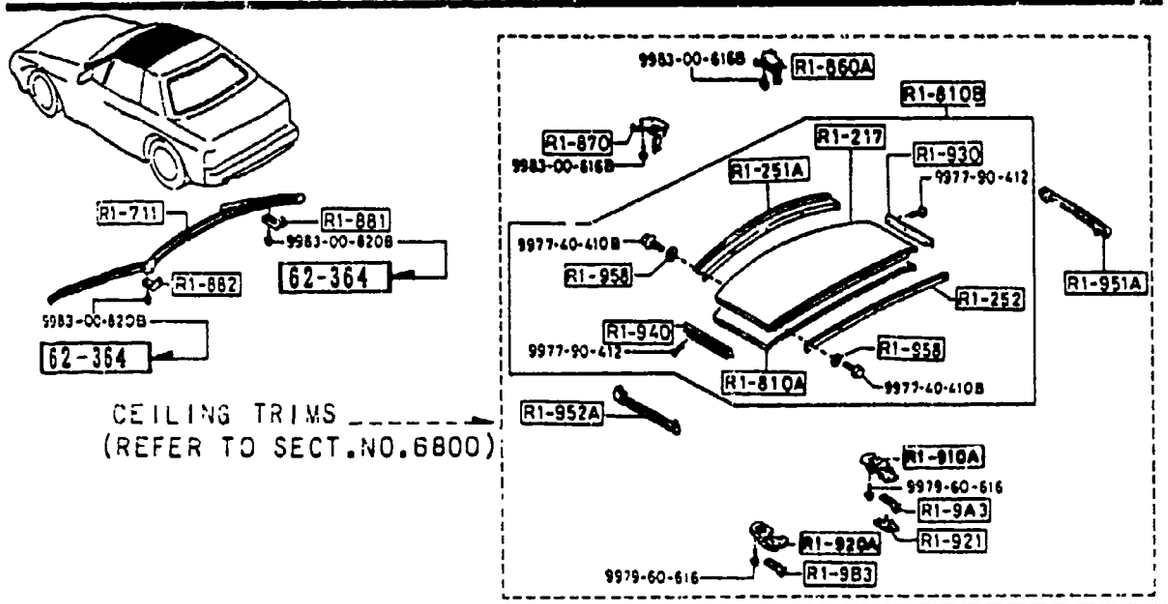

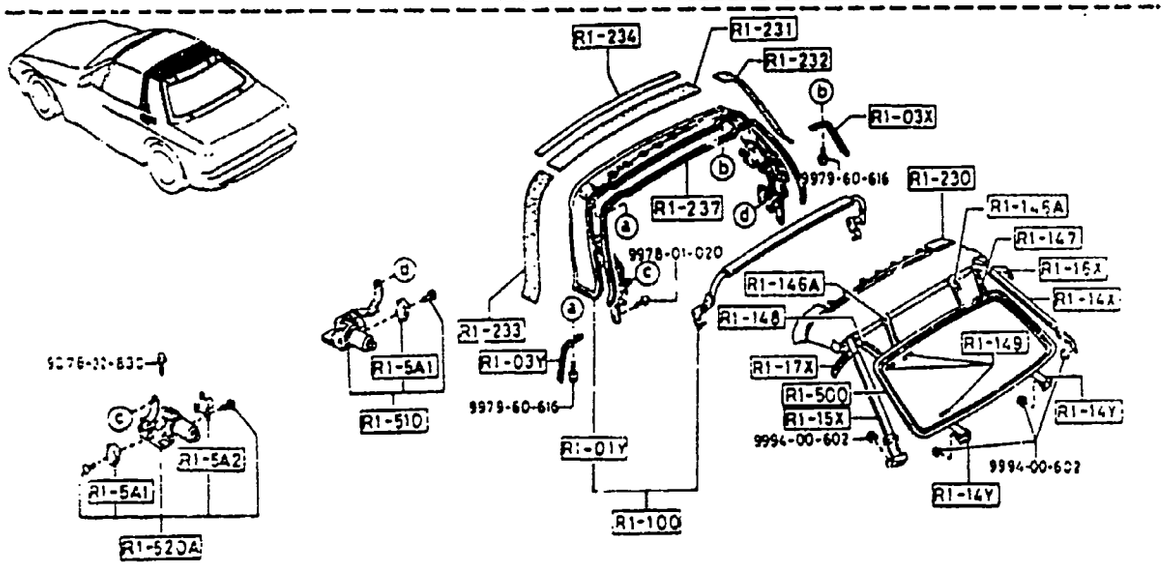

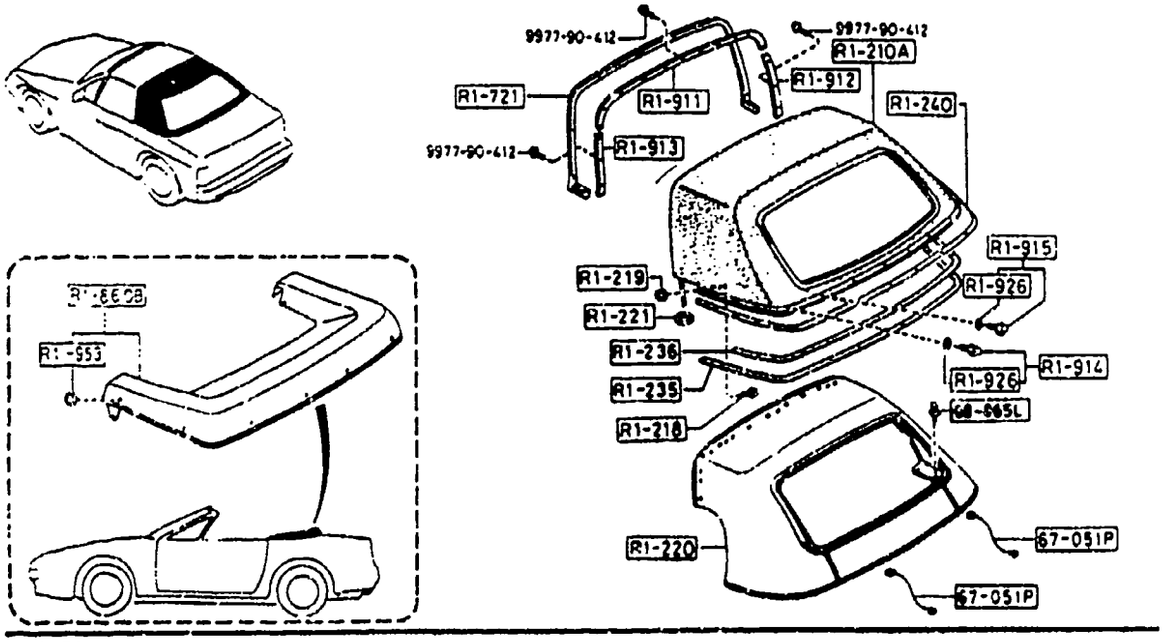

AUFA02

PART NO.	QTY	MODEL/RESTRICTION	MODEL/RESTRICTION	MODEL/RESTRICTION	FROM-TO
R1-01Y FB67-R1-01YH	1	BAR(FRT),FORMING-SOFT TOP			
R1-03X FB67-R1-03X	1	BRKT(R),BELT-FORMING			
R1-03Y FB67-R1-03Y	1	BRKT(L),BELT-FORMING			
R1-100 FB67-R1-100	1	BAR,FORMING-SOFT TOP			
R1-14X FB67-R1-14X	1	BELT'A'(R),CORNER-SOFTTOP			
R1-14Y FB67-R1-14Y	2	BELT'C',BACK WINDOW			
R1-146A FB67-R1-146A	2	BELT'A',BACK WINDOW			
R1-147 FB67-R1-147A	1	BELT'B'(R),BACK WINDOW			
R1-148 FB67-R1-148A	1	BELT'B'(L),BACK WINDOW			
R1-149 FB67-R1-149	6	PIN,BELT-BACK WINDOW			
R1-15X FB67-R1-15X	1	BELT'A'(L),CORNER-SOFTTOP			
R1-16X FB67-R1-16X	1	BELT'B'(R),CORNER-SOFTTOP			
R1-17X FB67-R1-17X	1	BELT'B'(L),CORNER-SOFTTOP			
R1-210A FCZ3-R1-210	1	FABRIC,TOP-SOFT TOP			

CAT. AUFA02-06

1992-05

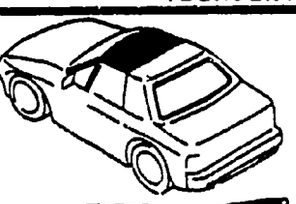

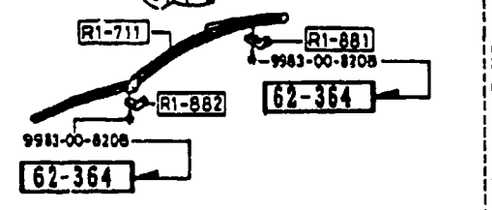

CEILING TRIMS
(REFER TO SECT.NO.6800)

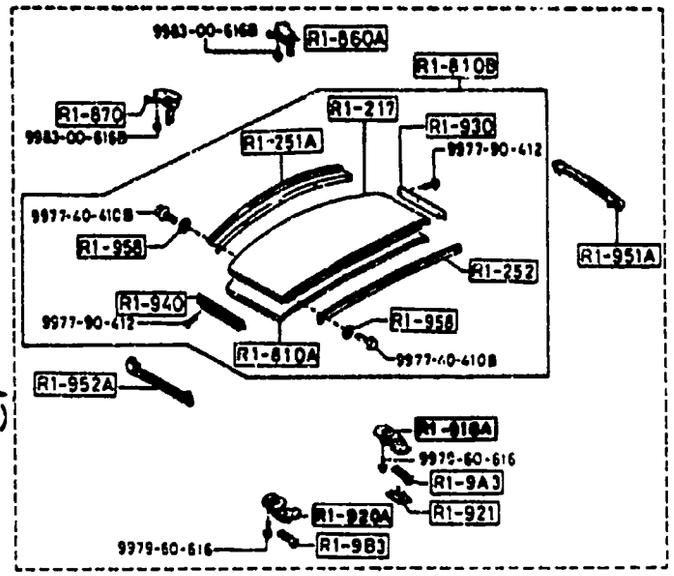

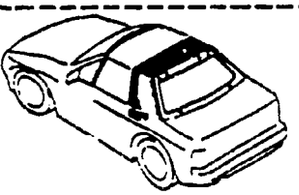

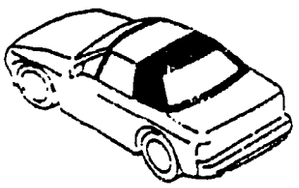

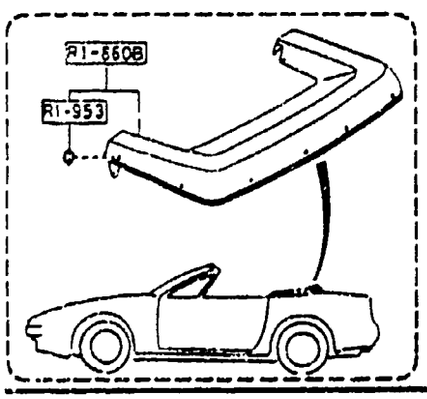

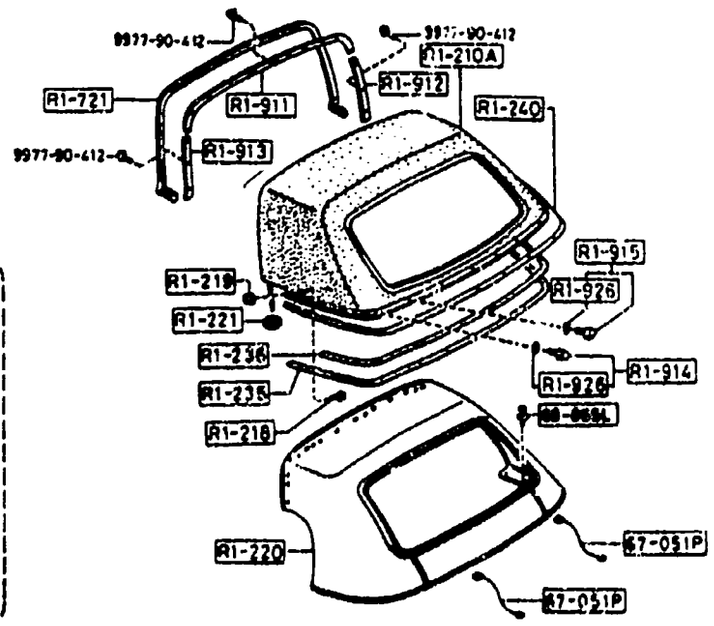

PART NO.	QTY	MODEL/RESTRICTION	MODEL/RESTRICTION	MODEL/RESTRICTION	FROM-TO
R1-217		FABRIC COVERING,ROOF PANEL			
FC33-R1-217	1				
R1-218		BOLT,HOOD OUTER			
FB67-R1-218	2				
R1-219		NUT,HOOD OUTER			
FB67-R1-219	2				
R1-220		LINER,HEAD-SOFT TOP			
FB67-R1-212C	1				
02		FD8 FE1 BLACK			
48		FD9 BLUE			
R1-221		PRUG,DRAIN HOSE-RR F LOOR			
FB67-R1-221	2				
R1-230		INSULATOR,TOP CEILIN G			
FB67-R1-213	1				
R1-231		PAD(CTR),SPACER-SOFT TOP			
FB67-R1-231	1				
R1-232		PAD(R),SPACER-SOFT T OP			
FB67-R1-232	1				
R1-233		PAD(L),SPACER-SOFT T OP			
FB67-R1-233	1				
R1-234		PLATE,FRONT-SOFT TOP			
FB67-R1-234	1				
R1-235		TAPE'A',SEAL-TOP FAB RIC			
FB67-R1-235	1				
R1-236		TAPE'B',SEAL-TOP FAB RIC			
FB67-R1-236	1				
R1-237		PROTECTOR,FORMING BA R			
FB67-R1-237A	1				

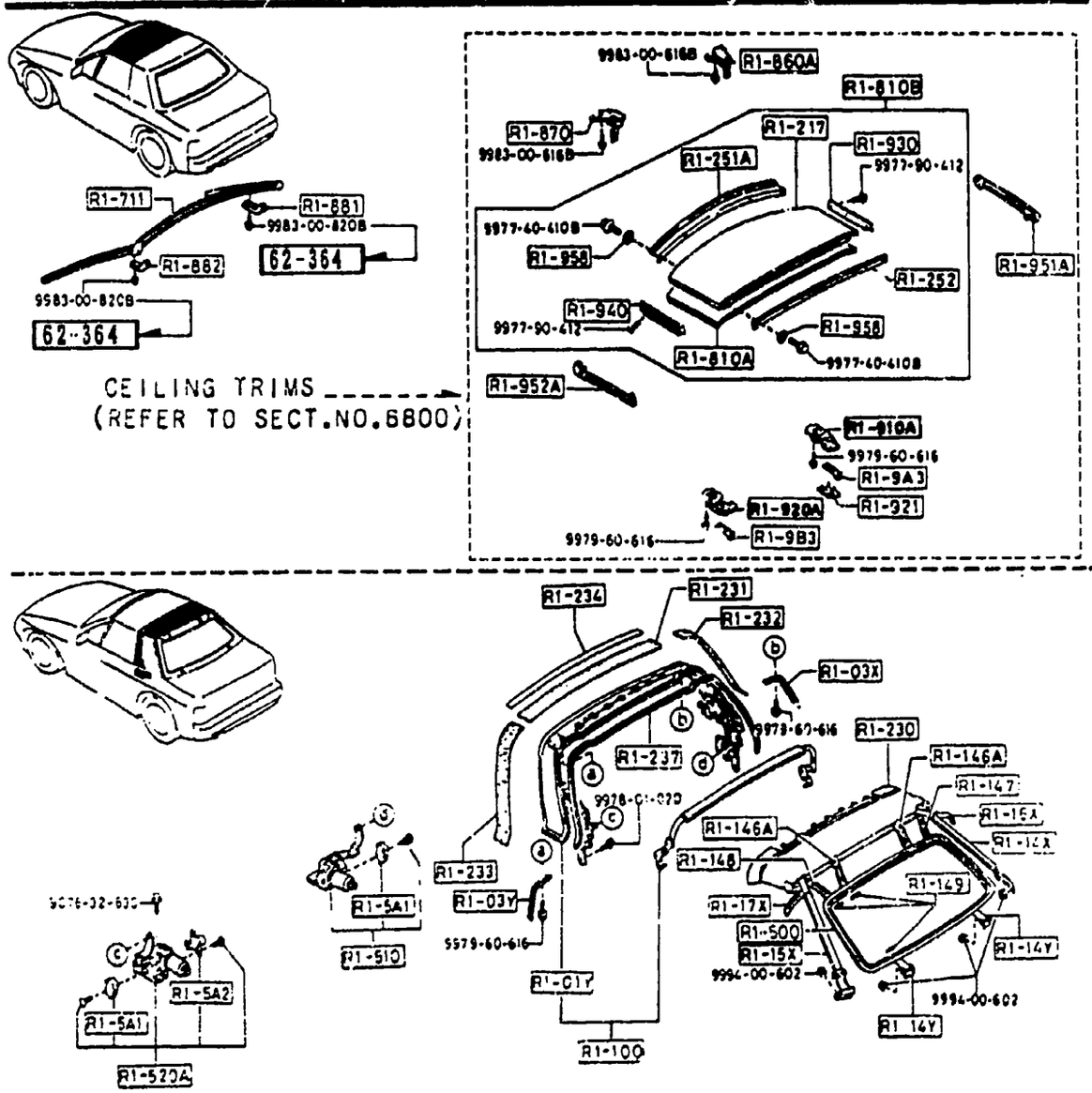

PART NO.	QTY	MODEL/RESTRICTION	MODEL/RESTRICTION	MODEL/RESTRICTION	FROM-TO
R1-240 FB67-R1-214A	1	PLATE,SET-HOOD REAR			
R1-251A FB67-R1-251	1	PLATE(FRT),SET-ROOF PANEL			
R1-252 FB67-R1-252	1	PLATE(RR),SET-ROOF PANEL			
R1-5A1 FB67-R1-5A1	2	SWITCH,LIMIT-TOP MOTOR			
R1-5A2 FB67-R1-5A2	1	BUZZER,TOP MOTOR			
R1-500 FB67-R1-42XA	1	FRAME,BACK WINDOW			
R1-510 FB67-R1-5100	1	MOTOR(R),TOP			
R1-520A FB67-R1-520B	1	MOTOR(L),TOP			
R1-711 FB67-R1-711D AN(FB67-R1-711E)	1	WTHSTP,FRONT HEADER			-9421
FB67-R1-711E	1				9421-
R1-721 FB67-R1-721D AN(FB67-R1-721E)	1	WTHSTP.,HOMING BAR-FRONT			-9421
FB67-R1-721E	1				9421-
R1-810A FB67-R1-810H	1	PANEL,ROOF LESS OUTER CLOTH			
R1-810B FCZ3-R1-2Y0	1	PANEL/FABRIC,ROOF			

9421 FC3###-706548

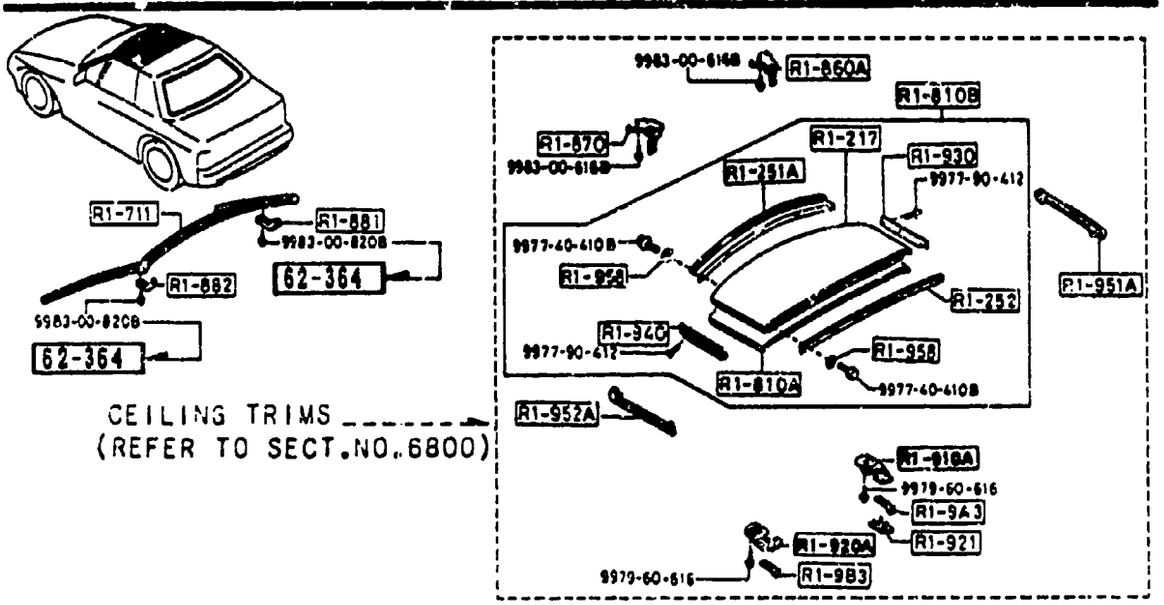

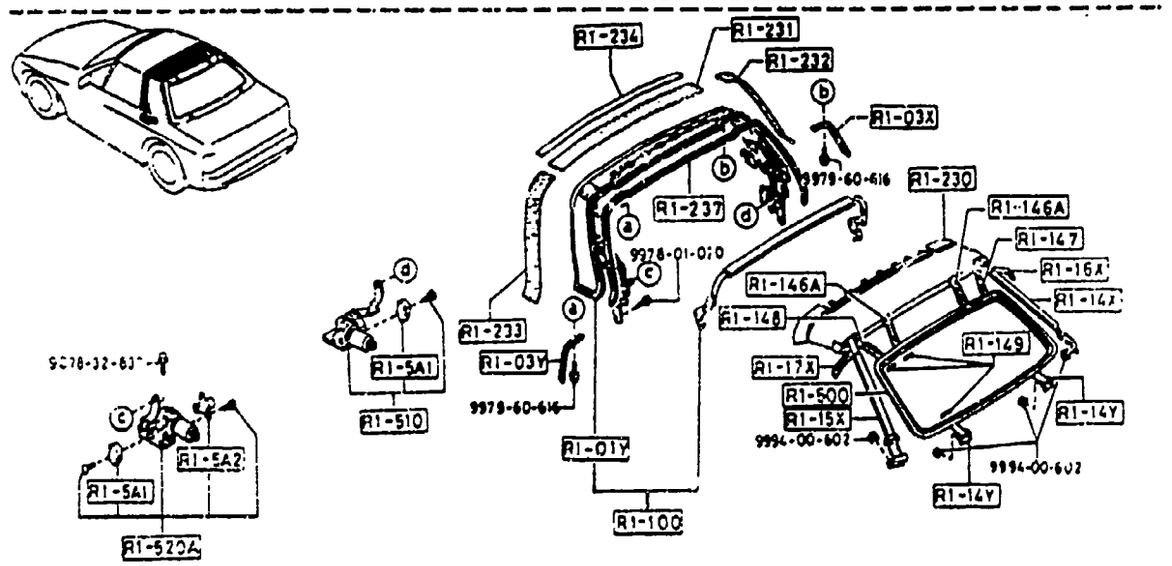

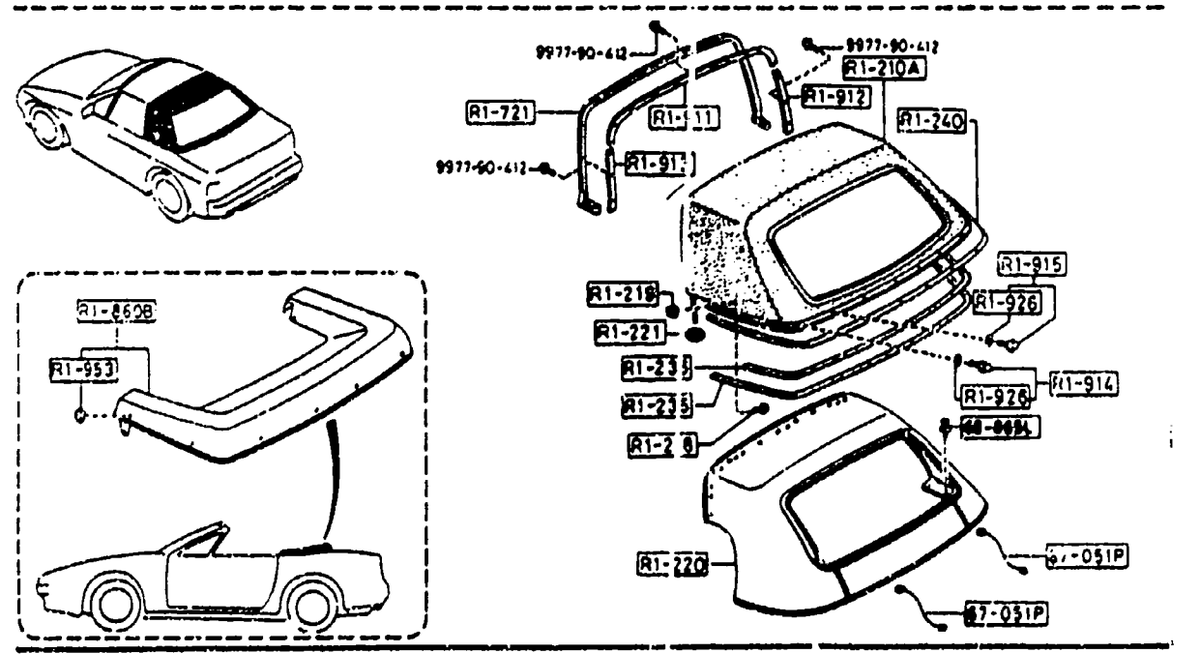

PART NO.	QTY	MODEL/RESTRICTION	MODEL/RESTRICTION	MODEL/RESTRICTION	FROM-TO
R1-860A		LOCK(R),TOP			
FB67-R1-860D	1				
R1-860B		BOOT,TOP			
FB67-R1-960G	1				
02		FD8 FE1 BLACK			
48		FD9 BLUE			
R1-870		LOCK(L),TOP			
FB67-R1-870D	1				
R1-881		STRIKER(R),LOCK-TOP			
FB67-R1-881C	1				
R1-882		STRIKER(L),LOCK-TOP			
FB67-R1-882C	1				
R1-9A3		BRACKET(R),HINGE-ROOF			
FB67-R1-9A3A	1				
R1-9B3		BRACKET(L),HINGE-ROOF			
FB67-R1-9B3A	1				
R1-910A		LOCK(R),HINGE-TOP			
FB67-R1-910H	1				
02		FD8 FE1 BLACK			
48		FD9 BLUE			
R1-911		RETAINER(C),FORMING BAR			
FB67-R1-911A	1				
R1-912		RETAINER(R),FORMING BAR			
FB67-R1-912A	1				
R1-913		RETAINER(L),FORMING BAR			
FB67-R1-913A	1				
R1-914		HOOK'A',HOOD			
FB67-R1-91YC	8				

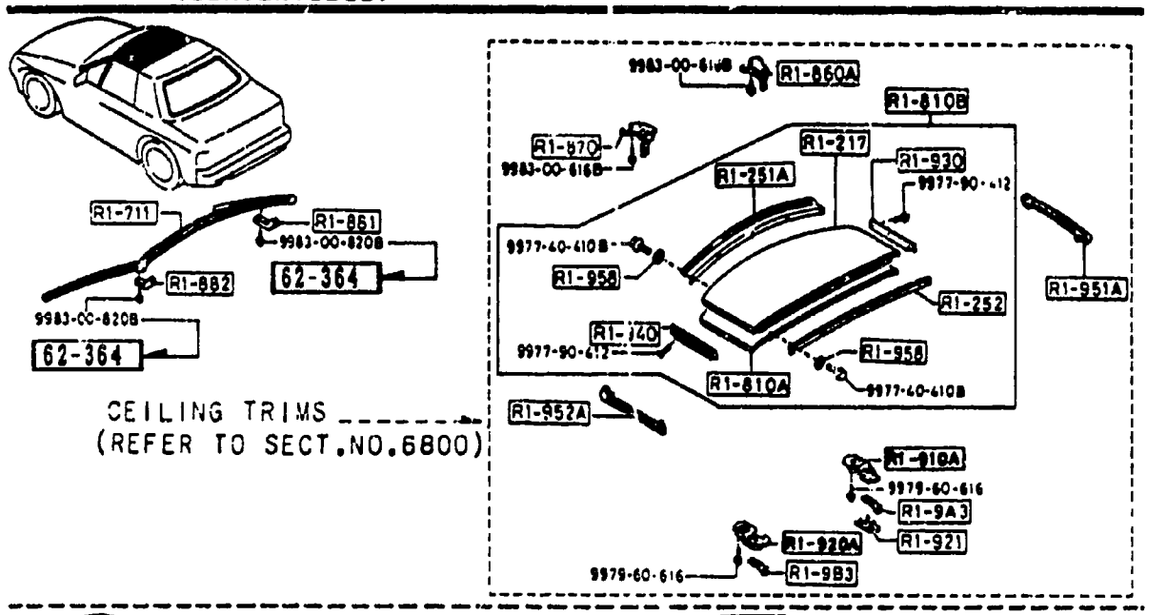

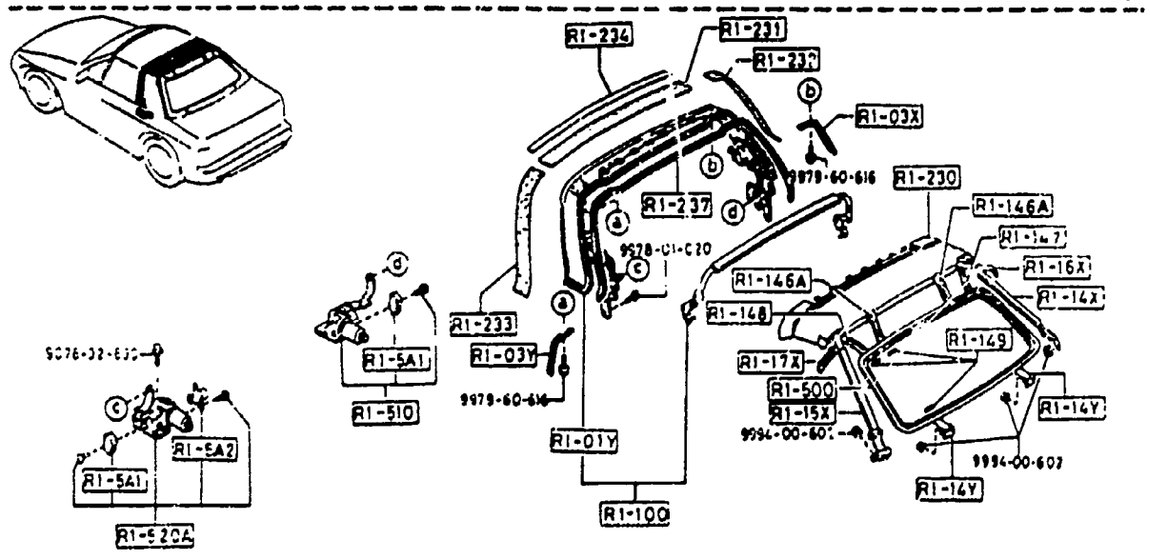

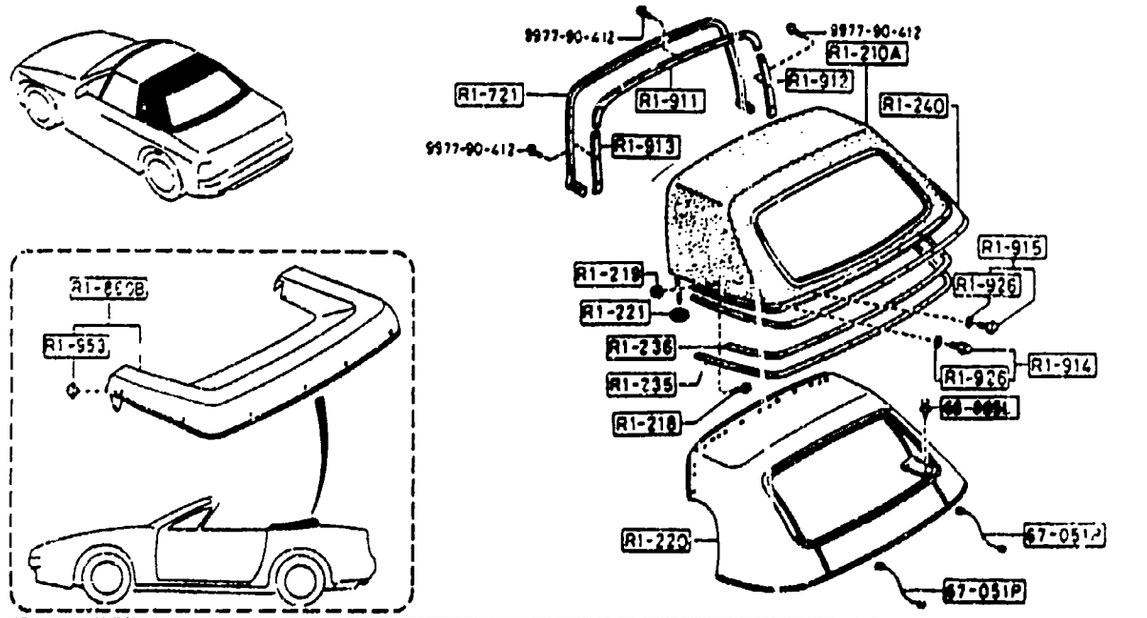

AUFA02

PART NO.	QTY	MODEL/RESTRICTION	MODEL/RESTRICTION	MODEL/RESTRICTION	FROM-TO
R1-915		HOOK'B',HOOD			
FB67-R1-91ZC	5				
R1-920A		LOCK(L),HINGE-TOP			
FB67-R1-920E	1				
R1-921		COVER,KNOB-HINGE			
FB67-R1-921A	1				
02		FD8 FE1 BLACK			
48		FD9 BLUE			
R1-926		WASHER,HOOK-HOOD COVER			
FB67-R1-926A	13				
R1-930		RETAINER(R),ROOF PANEL			
FB67-R1-930A	1				
R1-940		RETAINER(L),ROOF PANEL			
FB67-R1-940A	1				
R1-951A		WTHSTP(R),ROOF PANEL			
FB67-R1-951E	1				-9602
FC54-R1-951B	1				9602-
R1-952A		WTHSTP(L),ROOF PANEL			
FB67-R1-952E	1				-9602
FC54-R1-952B	1				9602-
R1-953		HOOK,HOOD-REAR CORNER			
B235-R1-953	12				
R1-958		WASHER,HOOK'A'&'B'			
B235-R1-958A	10				
62-364		SCREW,STRIKER			
FB67-R1-222	4				9201-
67-051P		HARNESS,REAR DEFFOGER			
FB67-67-060A	2				

9201 FC3####-701886
9602 FC3####-708068

CAT. AUFA02-06

1992-05

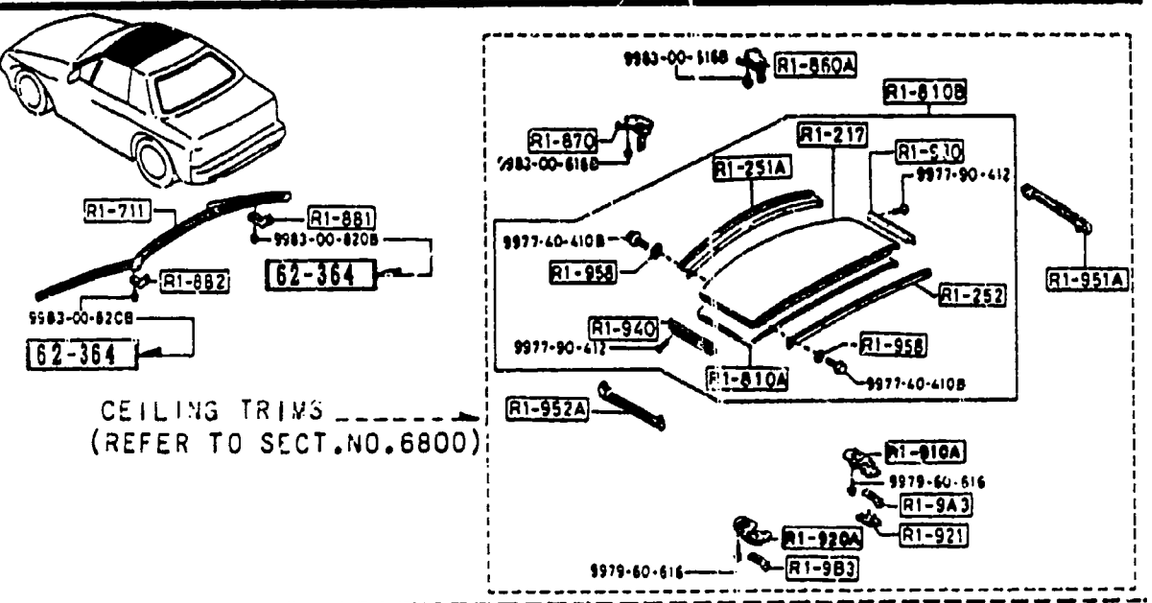

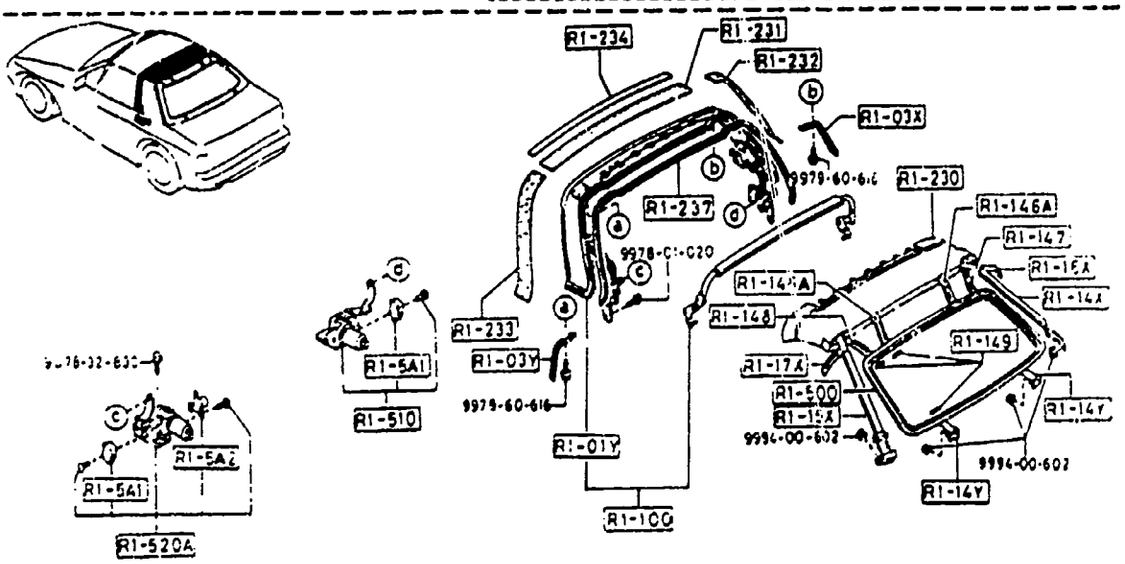

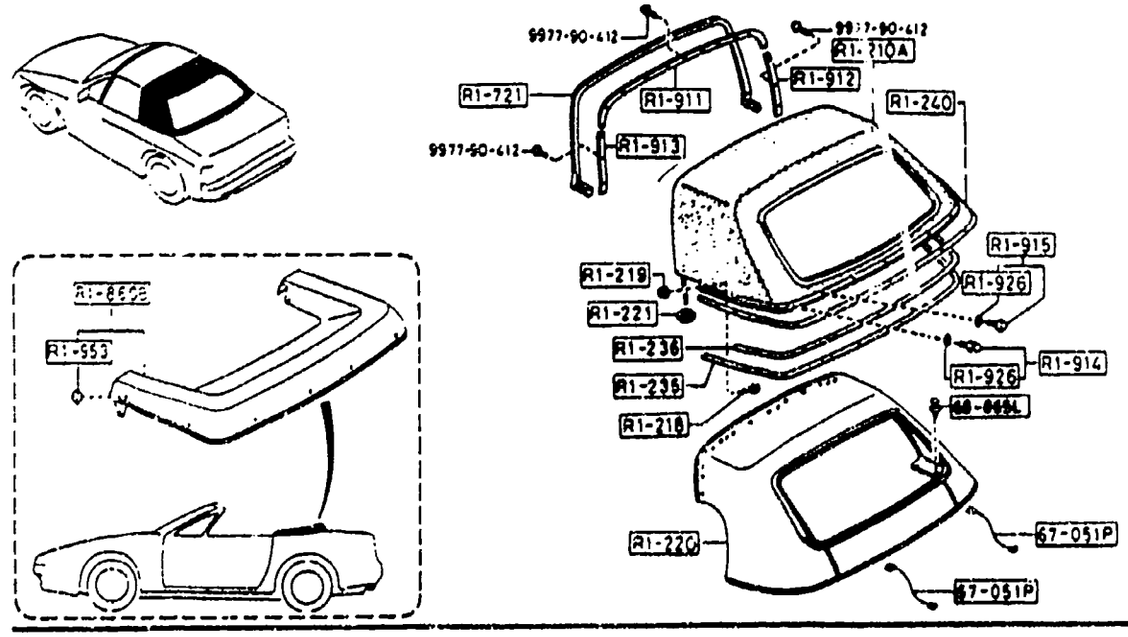

PART NO.	QTY	MODEL/RESTRICTION	MODEL/RESTRICTION	MODEL/RESTRICTION	FROM-TO
68-865L		FASTENER			
B042-68-865	13				
00		FD8 FD9 FE1 BLACK			

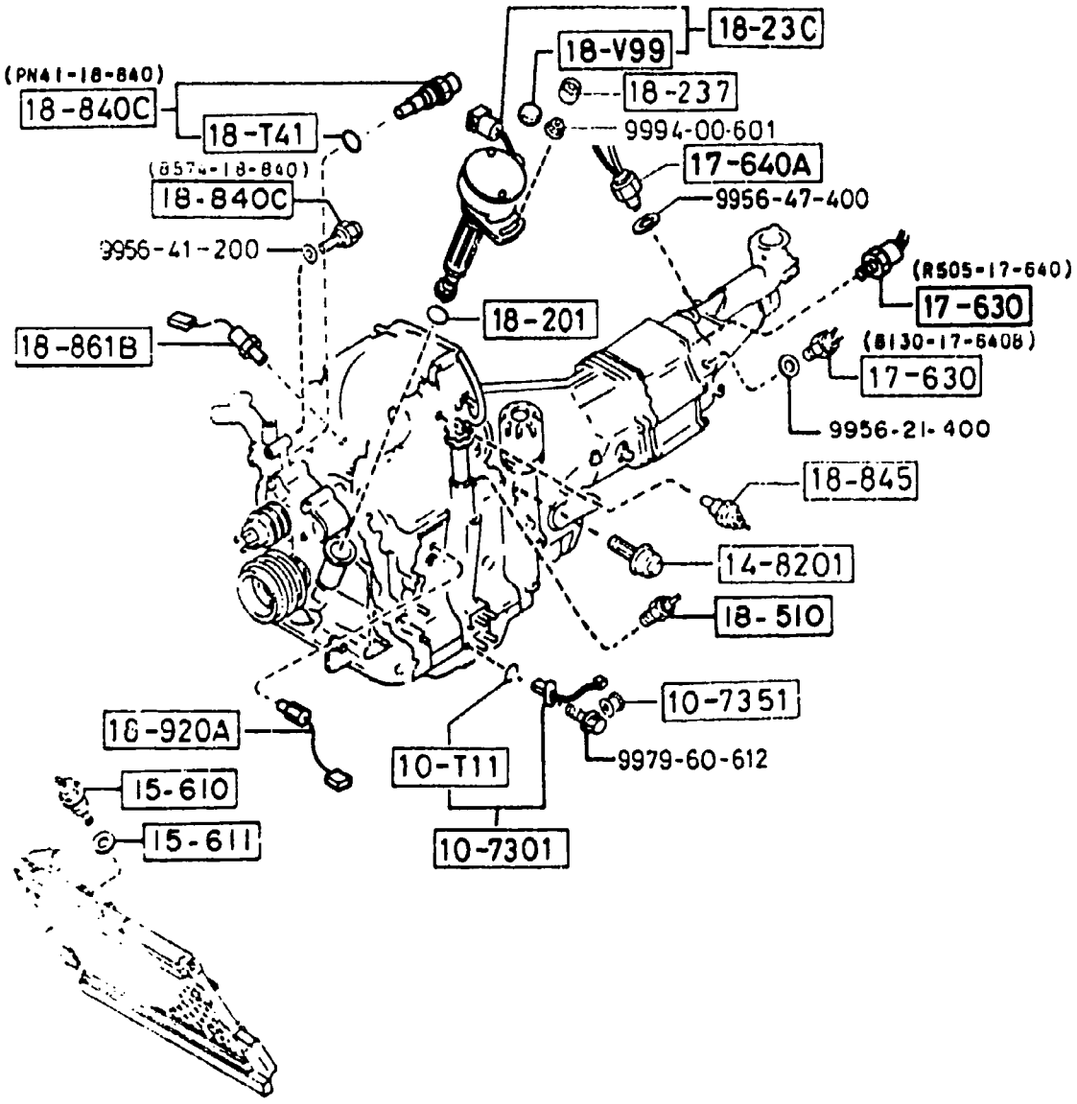
(PN41-18-840)
18-840C
18-T41
(8574-18-840)
18-840C
9956-41-200
18-V99
18-23C
18-237
9994-00-601
17-640A
9956-47-400
(R505-17-640)
17-630
(8130-17-6408)
17-630
9956-21-400
18-201
18-861B
18-845
14-8201
18-510
10-7351
9979-60-612
10-T11
10-7301
16-920A
15-610
15-611
21-292
19-446
19-444
19-838B
21-291
(A T)
21-571B
21-548A
21-296
21-295
21-294

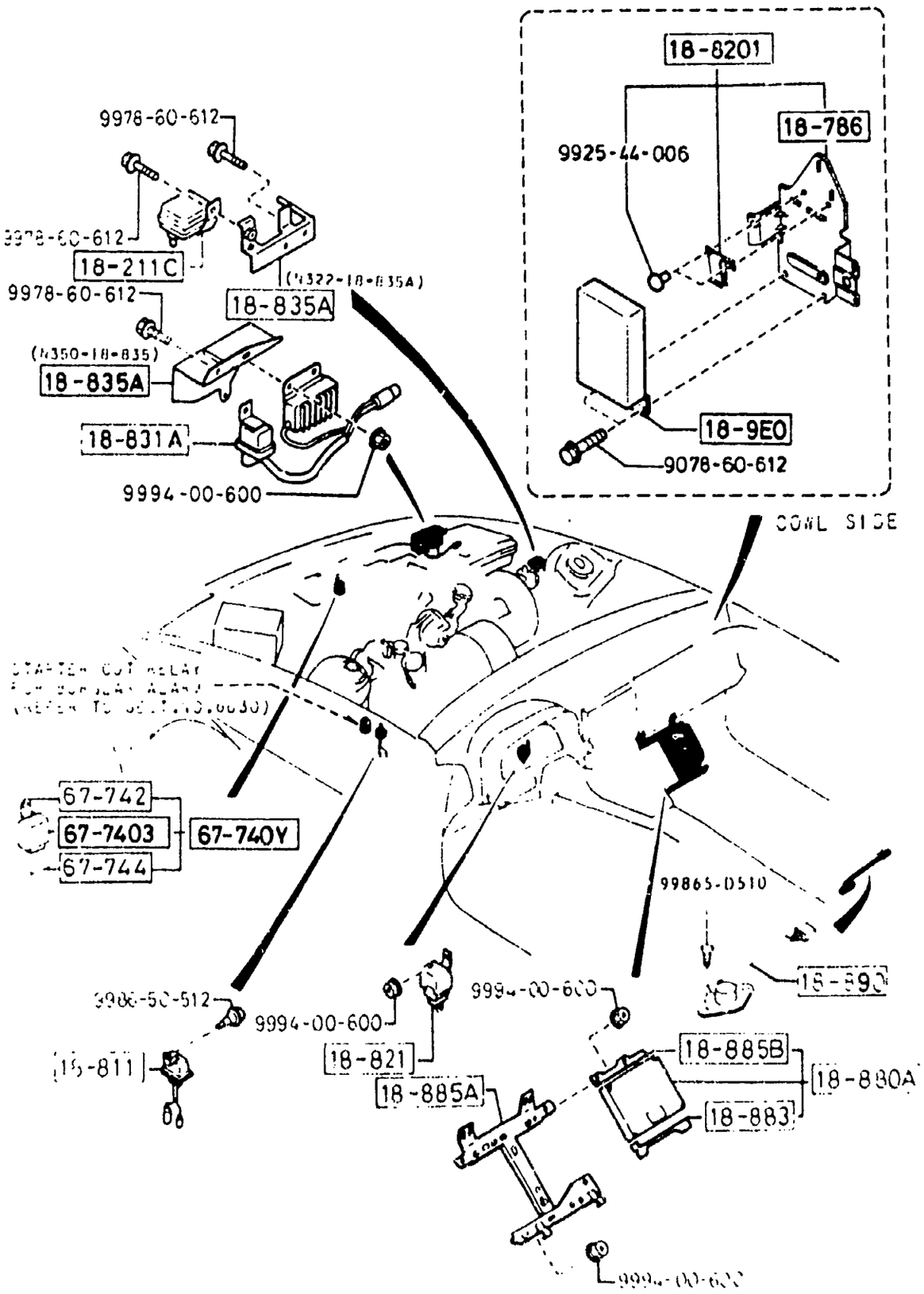
18-8201
18-786
9925-44-006
18-9E0
9078-60-612
9978-60-612
18-211C
(8322-18-835A)
18-835A
(8350-18-835)
18-835A
18-831A
9994-00-600
COWL SIDE
67-742
67-7403
67-744
67-740Y
99865-0510
9994-00-600
18-811
18-821
18-885B
18-885A
18-883
18-880A

(THIS ILLUSTRATION CONSISTS OF 2 PAGES)

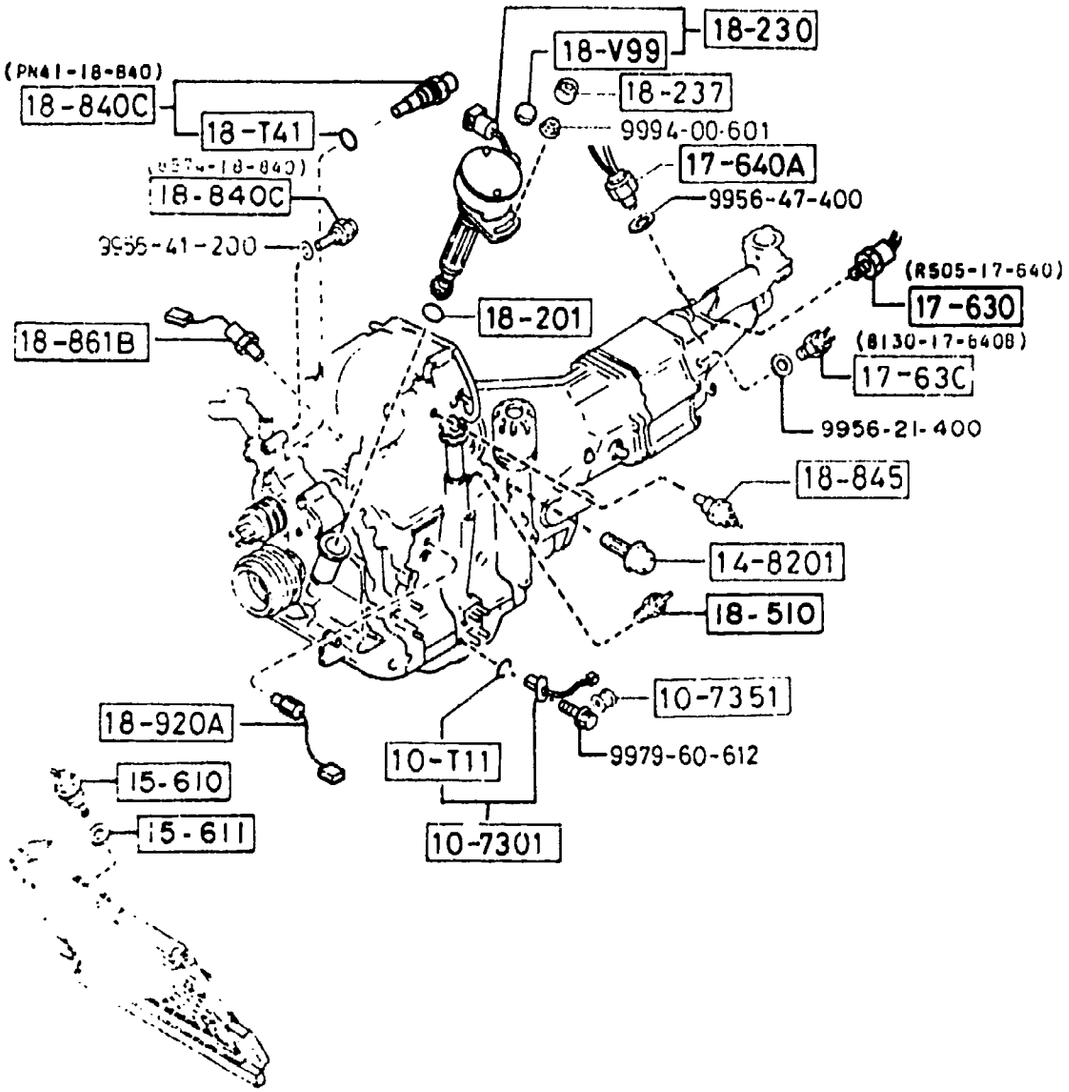

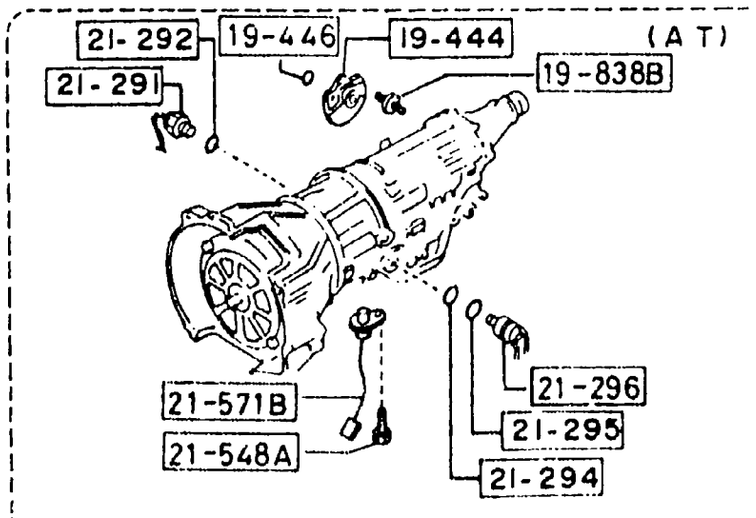

PART NO.	QTY	MODEL/RESTRICTION	MODEL/RESTRICTION	MODEL/RESTRICTION	FROM-TO
10-T11		RING,'O'-OIL LEVEL SENSOR			
N326-10-T11	1				
10-7301		SENSOR,OIL LEVEL			
N326-10-470	1				
10-7351		PROTECTOR			
N231-10-735	1				
14-8201		GAUGE UNIT,OIL PRES.			
N201-14-820	1				
15-610		SENSOR,WATER LEVEL			
N337-15-610	1				
15-611		GASKET			
8553-15-611	1				
17-630		SWITCH			
R505-17-640	1	(BACK UP LAMP SWITCH) ((TURBO)>(MT))			
8130-17-6408 A (8130-17-640C)	1				-9415
8130-17-640C	1	(BACK UP LAMP SWITCH) ((W/O TURBO)>(MT))			9415-
17-640A		SWITCH,PARK & NEUTRAL			
M502-17-640B A (M502-17-640C)	1				-9501
M502-17-640C	1	(MT)			9501-
18-T41		RING,'O'-WATER THERMO SW.			
F8B5-18-T41	1	((W/O TURBO)>(AT)) ((TURBO)>(MT))			
18-V99		CAP,BLIND-CRANK ANGLE SEN			
N326-18-V99	1				
18-201		RING,'O'			
99541-03501	1				

9415 FC3***-706193
9501 FC3***-707092

LO.NO	SEC.NO	SECTION NAME
4-C03	6100	HEATER
4-E03	6110	HEATER UNIT COMPONENTS
4-F03	6115	HEATER CONTROLS COMPONENTS
4-G03	6120	HEATER BLOWER COMPONENTS
4-I03	6130	AIR CONDITIONER
4-J03	6230	LIFT GATE MECHANISMS (COUPE)
4-M03	6300	WINDOW GLASSES (COUPE)
4-N03	6300A	WINDOW GLASSES (CONVERTIBLE)
4-C04	6330	SUNROOF (COUPE)
4-G04	6330A	SUNROOF (CONVERTIBLE)
4-M04	6600	SWITCHES & RELAYS (ENGINE)
4-G05	6610	DASHBOARD SWITCHES
4-H05	6611	COMBINATION SWITCH
4-I05	6612	CLUSTER SWITCH
4-L05	6615	POWER WINDOW SWITCHES
4-M05	6630	RELAYS & UNIT (BODY)
4-D06	6635	DOOR SWITCH & HORNS
4-F06	6640	AUTO CRUISE CONTROL SYSTEM
4-F06	6680	AUDIO SYSTEMS (RADIO & TAPE DECK) (COUPE)
4-K06	6680 A	AUDIO SYSTEMS (RADIO & TAPE DECK) (CONVERTIBLE)
4-M06	6682	AUDIO SYSTEMS (ANTENNA & SPEAKER) (COUPE)
4-D07	6682 A	AUDIO SYSTEMS (ANTENNA & SPEAKER) (CONVERTIBLE)
4-G07	6684	AUDIO SYSTEMS(NOISE SUPPRESSOR & EARTH CORD)
4-H07	6700	WIRING HARNESSES(FRONT & REAR)
4-N07	6701	WIRING HARNESSES(ENGINE & T/MISSION)
4-D08	6702	WIRING HARNESSES(DASHBOARD)
4-E08	6703	WIRING HARNESSES(DOOR,FLOOR/CEILING)
4-G08	6704	WIRING HARNESS CLAMPS
4-J08	6720	WINDSHIELD WASHER (1.5L & 2.5L)
4-L08	6720 A	WINDSHIELD WASHER (5.7L)
4-N08	6730	WINDSHIELD WIPERS
4-C09	6740	WIPER MOTOR COMPONENTS(FRONT)
4-D09	6750	WINDOW WIPER & WASHER (REAR)
4-G09	6760	WINDOW WIPER MOTOR COMPONENTS (REAR)
4-H09	6800	CEILING TRIMS (COUPE)
4-J09	6800A	CEILING TRIMS (CONVERTIBLE)
4-K09	6810	ROLLEBAR (CONVERTIBLE)
4-N09	6820	PILLAR TRIMS (COUPE)
4-F10	6820A	PILLAR TRIMS (CONVERTIBLE)
4-C10	6840	TRIMS & SCUFF PLATES (COUPE)
4-F10	6840A	TRIMS & SCUFF PLATES (CONVERTIBLE)
4-N10	6845	STRAGE BOX (COUPE) (GXL,TURBO)
4-D11	6860	FLOOR MATS & PADS (COUPE)
4-K11	6860A	FLOOR MATS & PADS (CONVERTIBLE)
4-C12	6870	SERVICE TOOLS
4-D12	6900	VISORS,ASSIST HANDLES & MIRRORS (COUPE)
4-H12	6900A	VISORS.ASSIST HANDLES & MIRRORS (CONVERTIBLE)
4-K12	6930	CAUTION PLATES & LABELS
4-N12	7250	QUARTER WINDOW & TRIMS
4-E13	7800	SPOILERS & RELATED PARTS
4-C14	7900	ACCESSORIES

LO.NO	SEC.NO	SECTION NAME

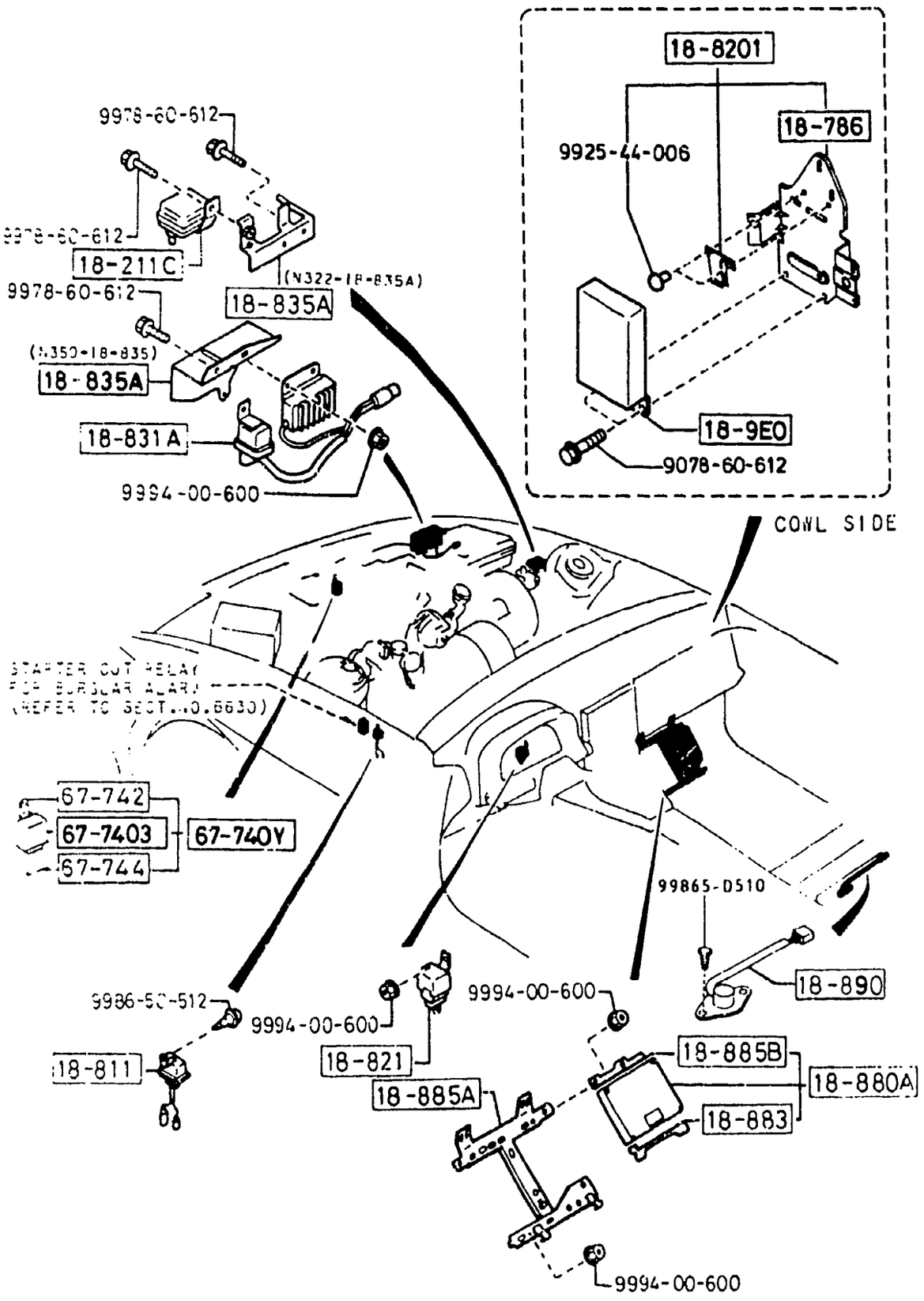

AUFA02

PART NO.	QTY	MODEL/RESTRICTION	MODEL/RESTRICTION	MODEL/RESTRICTION	FROM-TO
18-211C		SENSOR,M.A.P.			
N350-18-211	1	(W/O TURBO)			
N370-18-211	1	(TURBO)			
18-230		SENSOR,CRANKSHAFT POSI.			
N326-18-230	1				
18-237		CAP,CRANK ANGLE SENSOR			
N326-18-237	1				
18-510		UNIT,HEAT GAUGE			
JE15-18-51X	1				
18-786		BRACKET,CONTROL UNIT			
N361-18-946A	1	(MT)			
18-811		RELAY,MAIN			
N326-18-811B	1				-9101
N350-18-811	1				9101-
18-8201		BRACKET,CONTROL UNIT			
N361-18-945B	1	(AT)			
18-821		RELAY,FUEL PUMP			
N326-18-821A	1				
18-831A		RESISTOR,SOL.-FUEL PUMP			
N374-18-831	1				
18-835A		BRACKET			
N322-18-835A	1				
N350-18-835	1				
18-840C		SENSOR,TEMP.-ENG.COOLANT			
PN41-18-840	1	DENSO ((W/O TURBO)>(AT)) ((TURBO)>(MT))			
8574-18-840	1	DENSO			
18-845		SENSOR,IN.AIR TEMP			

9101 FC3###-700067

(THIS ILLUSTRATION CONSISTS OF 2 PAGES)

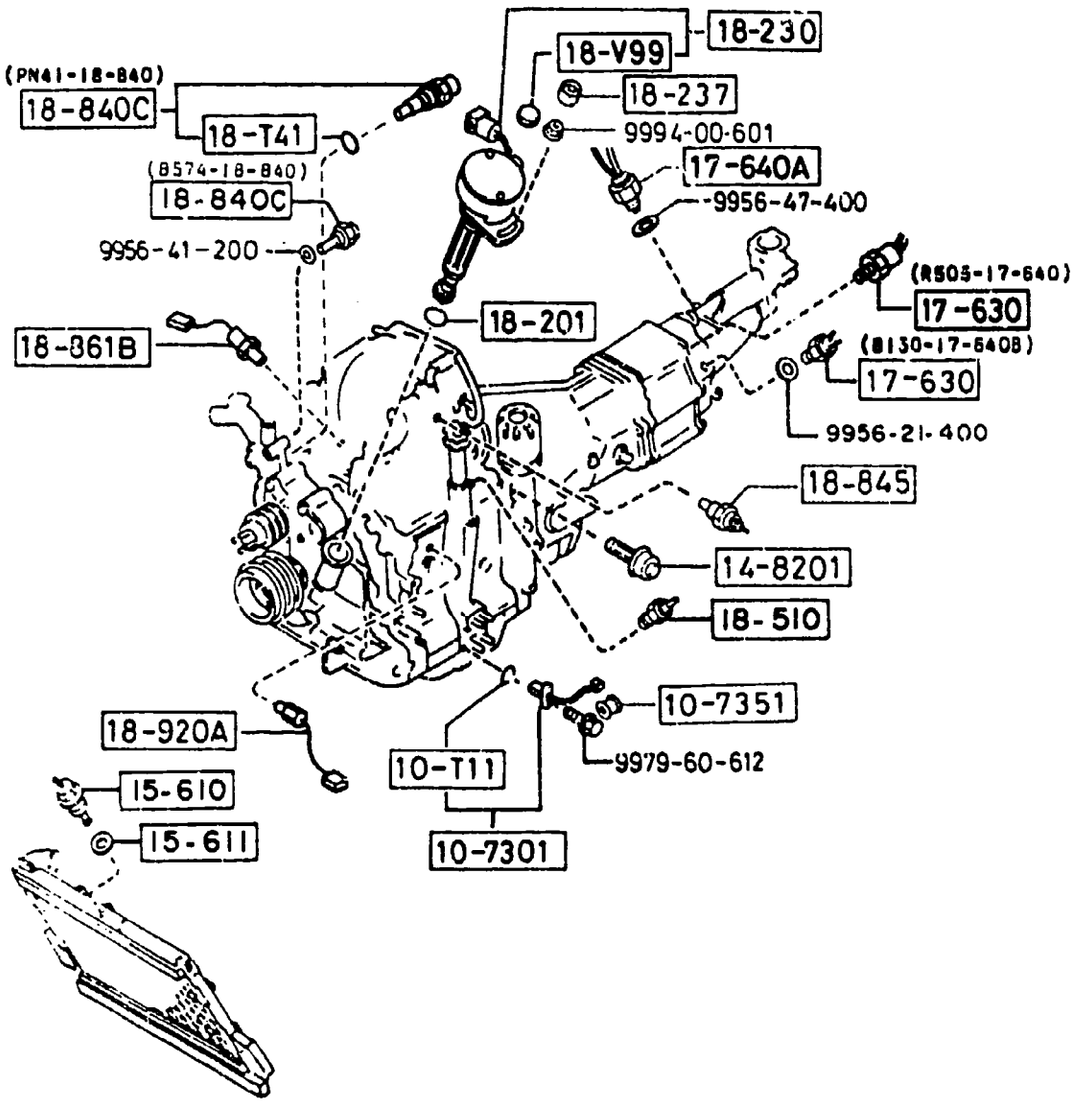

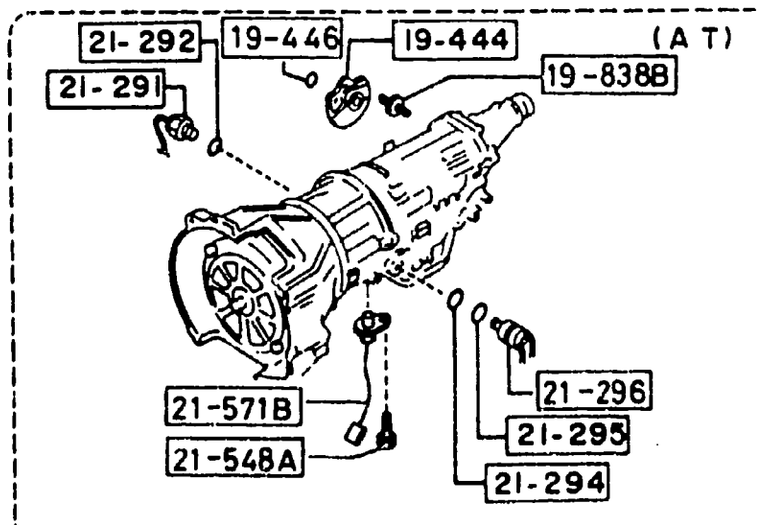

AUFA02 (CONT'D)

PART NO.	QTY	MODEL/RESTRICTION	MODEL/RESTRICTION	MODEL/RESTRICTION	FROM-TO
CONT'D					
N326-18-845	1				
18-861B		SENSOR,OXYGEN			
N350-18-861	1				
18-880A		MODULE,POWERTRAIN CONTROL			
N350-18-880	1	(W/EM LABEL-CALIF.) ((W/O TURBO)>(CPE))			
N351-18-880	1	(W/EM LABEL-FED.) ((W/O TURBO)>(CPE))			
N352-18-880	1	(W/EM LABEL-CALIF.) (CONVERTIBLE)			
N353-18-880	1	(W/EM LABEL-FED.) (CONVERTIBLE)			
N370-18-880	1	((TURBO)>(CPE))			
18-883		BRACKET,CONTROL UNIT			
N326-18-883	1				
18-885A		BRACKET,CONTROL UNIT			
N326-18-885A	1	(W/O AIR BAG)			
N387-18-885A	1	(W/AIR BAG)			
18-885B		BRACKET,CONTROL UNIT			
HE21-18-885A	1				
18-890		SWITCH,THERMO			
※N326-18-890A	1				
18-9E0		MODULE,PWT.CONTROL			
N351-18-9E1B A (N351-18-9E1C)	1				-0201
N351-18-9E1C	1	(AT)			0201-
18-920A		SENSOR,KNOCK			
N318-18-921	1	(TURBO)			
19-444		SWITCH,INHIBITOR			
BV09-19-444		')			
19-446		3,'0'			
0338-19-446	1	(AT)			

0201 FOR ※※-806074

CAT. AUFA02-06 1992-05

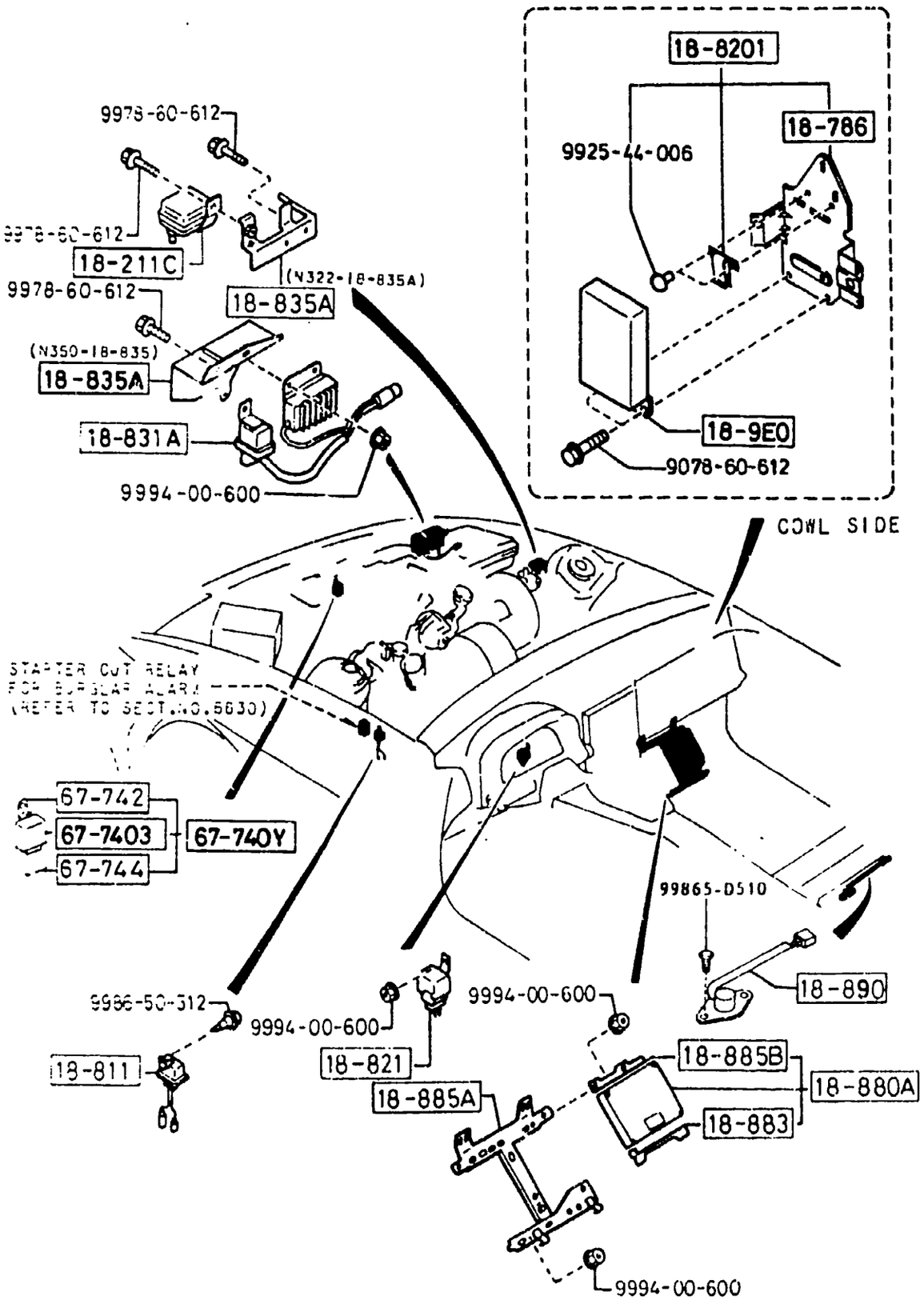

AUFA02

PART NO.	QTY	MODEL/RESTRICTION	MODEL/RESTRICTION	MODEL/RESTRICTION	FROM-TO
19-838B		BOLT			
BU17-19-838	2	(AT)			
21-291		SWITCH,OIL PRESSURE			
BV09-21-2J1	1	(AT)			
21-292		RING,'O'			
*BU01-21-292A	1	(AT)			
21-294		RING,'O'			
BU01-21-294	1	(AT)			
21-295		RING,'O'			
BU01-21-295	1	(AT)			
21-296		SOLENOID,LOCK UP CONTROL			
BV09-21-3A5	1	(AT)			
21-548A		BOLT			
BV01-21-548	1	(AT)			
21-571B		GENERATOR,SPEED PULSE			
BV09-21-5H1	1	(AT)			
67-740Y		RELAY & COVER,NORMAL OPEN 30A			
H320-67-740	1	(FOR COOLING FAN RELAY) (W/O AIR BAG) ((W/AIR BAG)>(MT))			
H430-67-740	1	((W/AIR BAG)>(AT))			
67-7403		RELAY,N.O.			
H270-67-740	1	30A (FOR COOLING FAN RELAY) ((W/O TURBO)>(AT)) ((TURBO)>(MT))			
67-742		BRACKET,RELAY			
H320-67-742	1	(FOR COOLING FAN RELAY) ((W/O TURBO)>(AT)) ((TURBO)>(MT))			

(THIS ILLUSTRATION CONSISTS OF 2 PAGES)

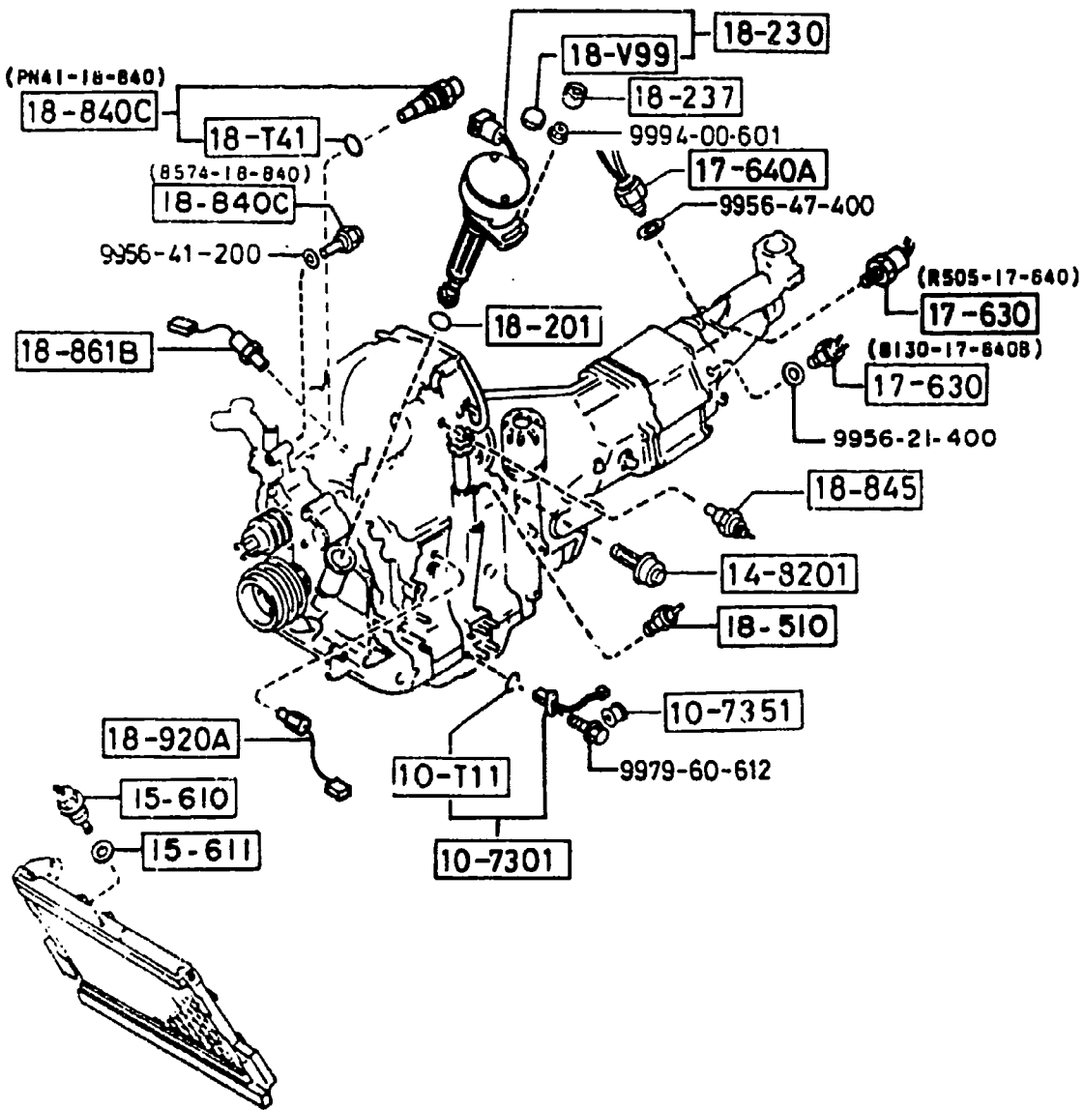

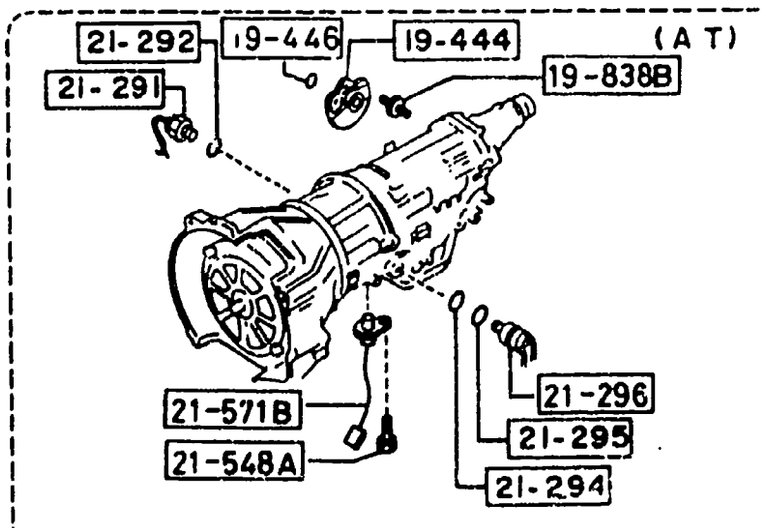

PART NO.	QTY	MODEL/RESTRICTION	MODEL/RESTRICTION	MODEL/RESTRICTION	FROM-TO
67-744					
H311-67-744	1	BOOT,RELAY-WATER PROOF (FOR COOLING FAN RELAY) ((W/O TURBO))(AT) ((TURBO))(MT)			

6610 -1 M DASHBOARD SWITCHES

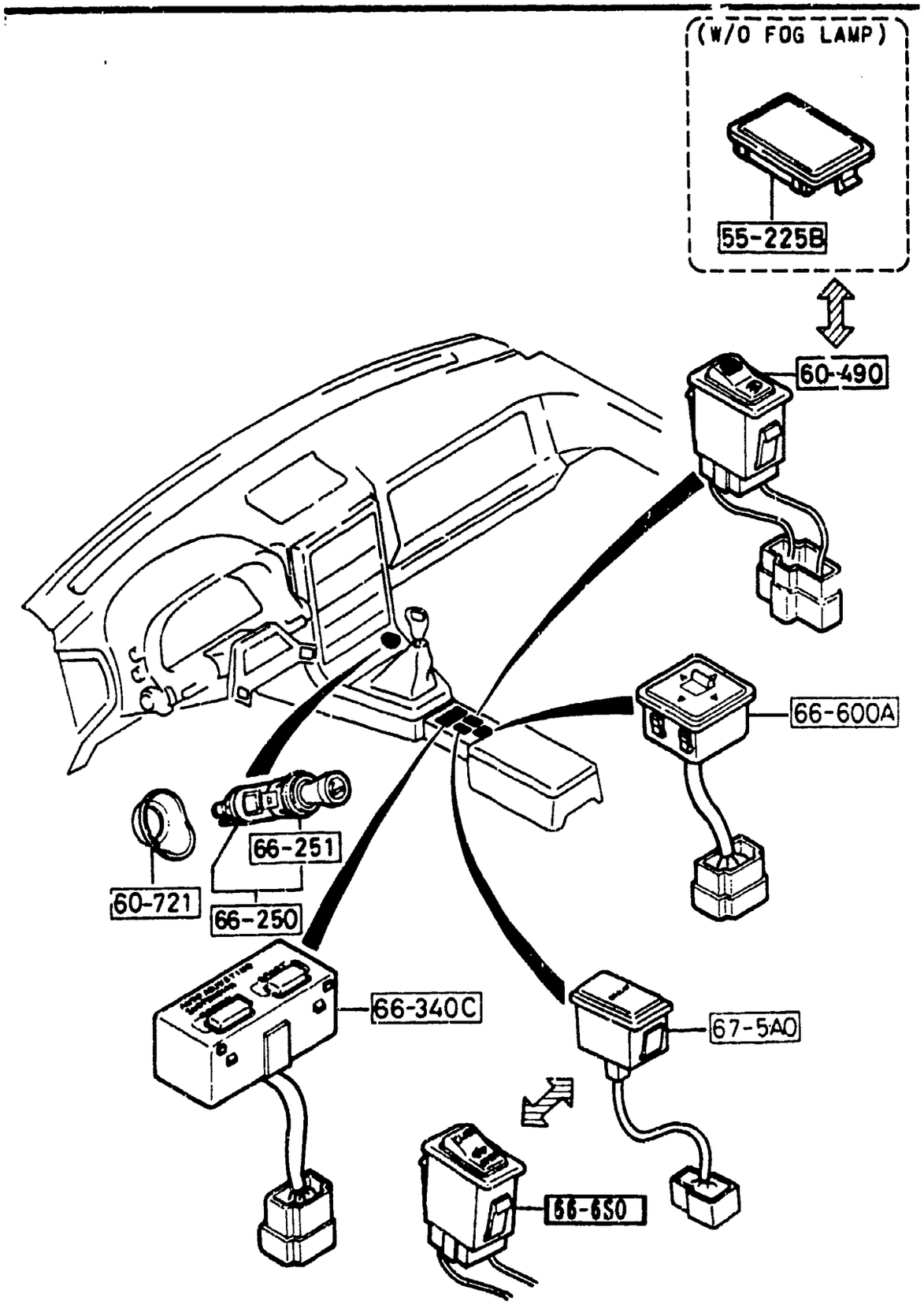

PART NO.	QTY	MODEL/RESTRICTION	MODEL/RESTRICTION	MODEL/RESTRICTION	FROM-TO
55-225B		COVER,HOLE			
B001-55-225A	1	GTU, GTUS, (W/O FOG LAMP)			
60-490		SWITCH,FOG LAMP			
F044-66-4B0	1	GXL, TURBO, CONV, (W/FOG LAMP)			
60-721		PROTECTOR			
FB01-66-241	1				
66-250		LIGHTER,CIGAR			
FB01-66-250	1				
66-251		RING,ILLUMINATION			
UB40-66-251	1				
66-340C		SWITCH,ADJUSTBL DAMPER			
FB07-66-340	1	(A.A.SUSP)			
66-6S0		SWITCH,SOFT TOP			
FC66-66-6S0	1	(W/AIR BAG)			
66-600A		SWITCH,RMT.MIRROR			
FB02-66-600A	1	USA, (DR MIRROR ELECT.)			
67-5A0		DISPLAY,SECURITY-ALARM			
FB01-67-5A0A	1	(W/O AIR BAG)			

6611 COMBINATION SWITCH

(W/AIR BAG)

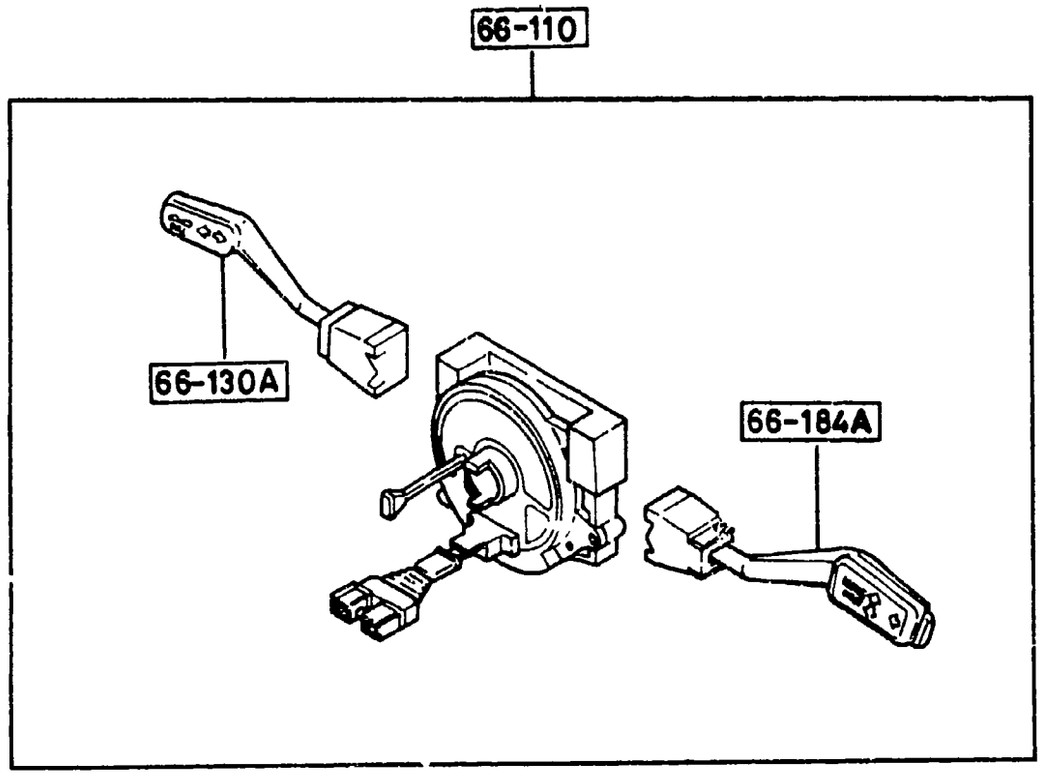

(W/O AIR BAG)

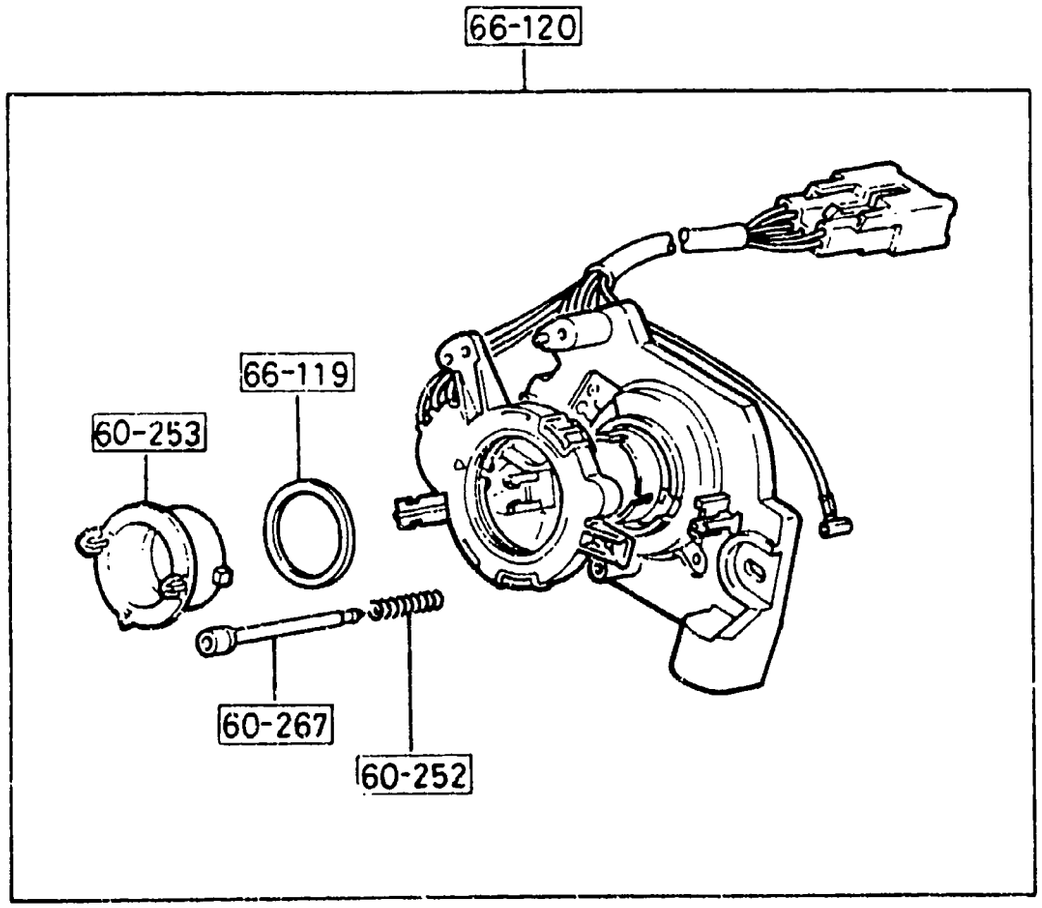

PART NO.	QTY	MODEL/RESTRICTION	MODEL/RESTRICTION	MODEL/RESTRICTION	FROM-TO
60-252		SPRING			
FB01-66-117	1	(W/O AIR BAG)			
60-253		CAM,CANCEL			
FB01-66-126	1	(W/O AIR BAG)			
60-267		CONTACT,HORN			
FB01-66-127	1	(W/O AIR BAG)			
66-110		SWITCH,COMBINATION			
FC66-66-120A	1	(W/AIR BAG)			
66-119		WASHER,CONTACT SPRING			
FB01-66-119	1	(W/O AIR BAG)			
66-120		SENSOR,TURN CANCEL			
FB01-66-120	1	(W/O AIR BAG)			
66-130A		SWITCH,TURN-CLUSTER SW.			
FC66-66-130	1	(W/AIR BAG)			
66-184A		SWITCH,CRUISE-CRUSTER			
FC66-66-34X	1	(W/AIR BAG)			

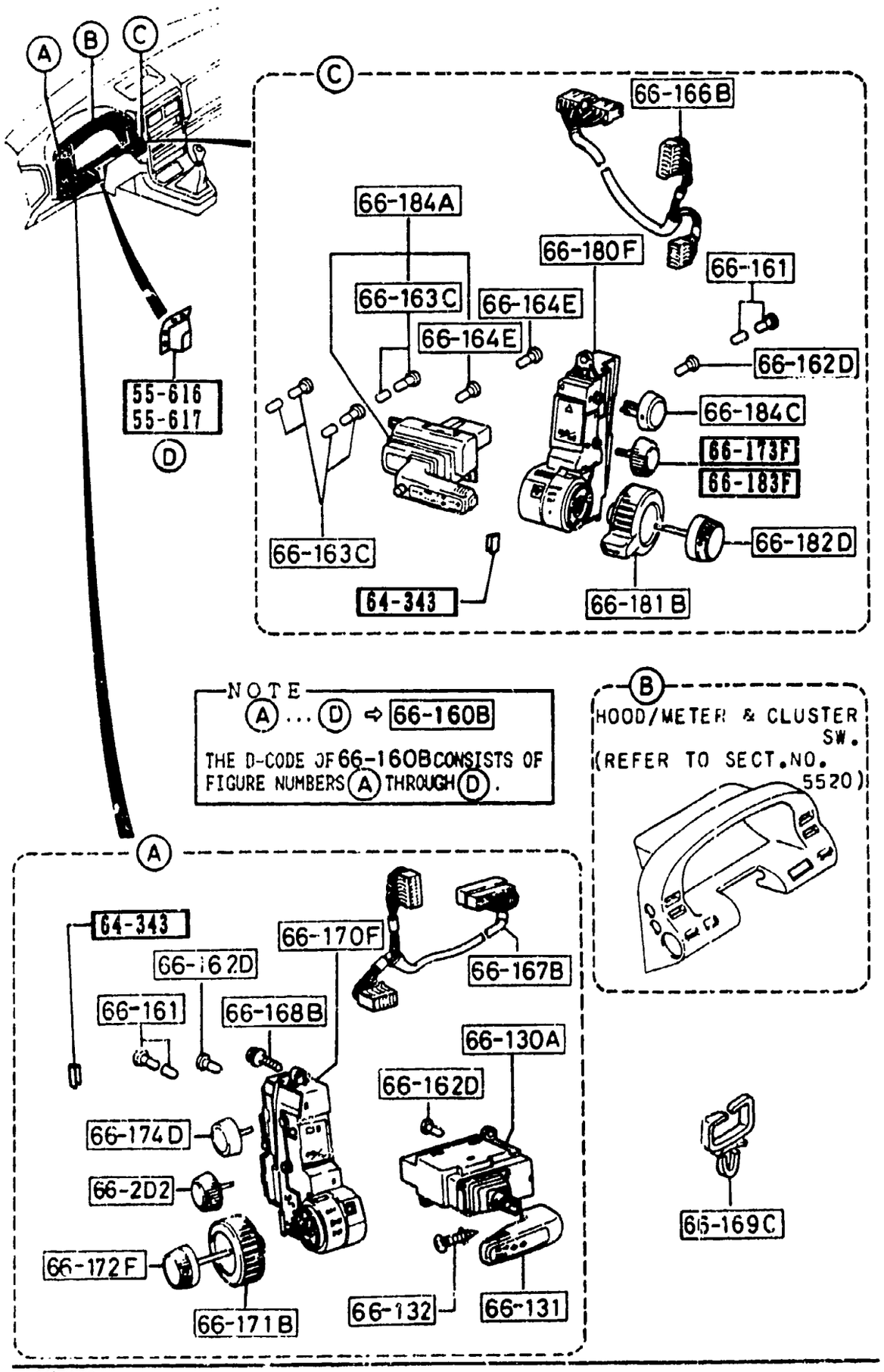

PART NO.	QTY	MODEL/RESTRICTION	MODEL/RESTRICTION	MODEL/RESTRICTION	FROM-TO
55-616		COVER(R),CLUSTER SWITCH			
FC66-55-616	1	(W/AIR BAG)			
55-617		COVER(L),CLUSTER SWITCH			
FC67-55-617	1	(W/AIR BAG)			
64-343		SPRING			
FC66-64-343	2	(W/AIR BAG)			
66-130A		SWITCH,TURN-CLUSTER SW.			
FC01-66-130	1	(W/O AIR BAG)			
66-131		KNOB,TURN-CLUSTER SWITCH			
FC01-66-131	1	(W/O AIR BAG)			
66-132		SCREW & WASHER,TURN KNOB			
FC01-66-132	1	(W/O AIR BAG)			
66-160B		SWITCH,CRUSTER			
FC01-66-160A	1	GTU, GTUS, (W/O AUTO CRUISE) ((CPE))(W/O A.LOCK BRAKE))			
FC02-66-160A	1	NON USA,			
FC07-66-160A	1	GXL, TURBO, (W/AUTO CRUISE) (CPE)			
FC08-66-160A	1	NON USA,			
FC17-66-160A	1	GTU, GTUS, (W/O AUTO CRUISE) ((CPE))(A.LOCK BRAKE))			
FC18-66-160A	1	NON USA,			
FC33-66-160A	1	(W/O H.L.CLEANER) ((CONVERTIBLE))(W/O AIR BAG))			
FC34-66-160A	1	NON USA,			
FC66-66-160A	1	((CONVERTIBLE))(W/AIR BAG))			
66-161		BULB'A',CLUSTER SWITCH			
FB01-66-161	2				

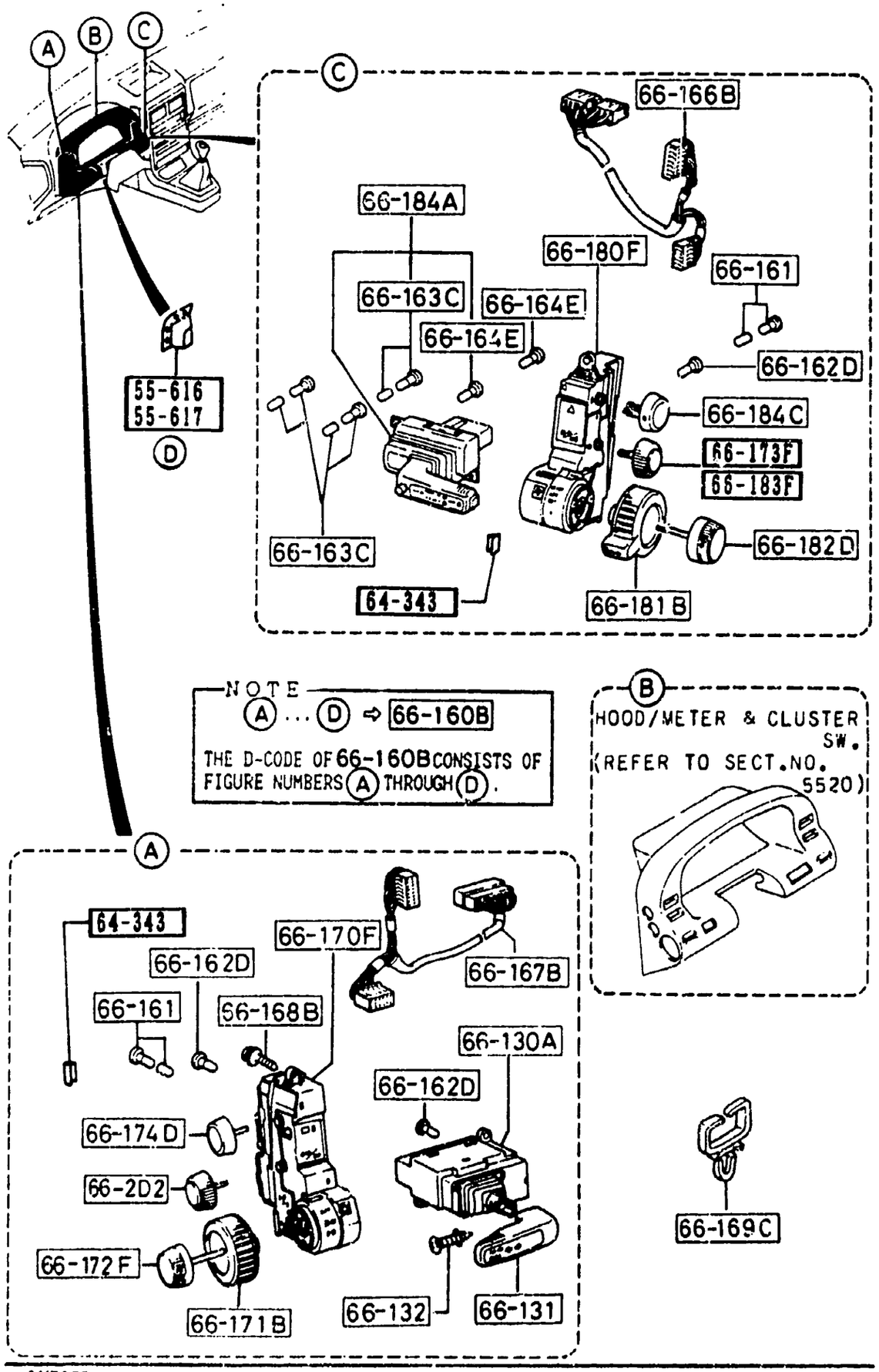

PART NO.	QTY	MODEL/RESTRICTION	MODEL/RESTRICTION	MODEL/RESTRICTION	FROM-TO
66-162D		BULB'B',CLUSTER SWITCH			
FB01-66-162	2	(W/AIR BAG)			
	3	(W/O AIR BAG)			
66-163C		BULB'C',CLUSTER SWITCH			
FC01-66-163	3	GXL, TURBO, (W/AUTO CRUISE CONT)			
		(W/O AIR BAG)			
66-164E		BULB'D',CLUSTER SWITCH			
FB01-66-164	2	GXL, TURBO, (W/AUTO CRUISE CONT)			
		(W/O AIR BAG)			
66-166B		HARNESS,WIPER-CLUSTER SW.			
FC01-66-166	1	(W/O AIR BAG)			
FC66-66-166	1	(W/AIR BAG)			
66-167B		HARNESS,LIGHT-CLUSTER SW.			
FC01-66-167	1	(W/O AIR BAG)			
FC66-66-167A	1	(W/AIR BAG)			
66-168B		SCREW,CLUSTER SWITCH			
FC01-66-168	1	(W/O AIR BAG)			
	6	(W/AIR BAG)			
66-169C		CLIP,CORD-CRUSTER SWITCH			
FB01-66-169	1	(W/O AIR BAG)			
66-170F		SWITCH,LIGHT-CLUSTER SW			
FC01-66-170	1	USA, (W/O H.L.CLEANER)			
FC02-66-170	1	NON USA,			
66-171B		KNOB,LIGHT-CLUSTER SWITCH			
FC01-66-171	1				
66-172F		KNOB,PANEL LIGHT-CLUSTER			
FC01-66-172	1				

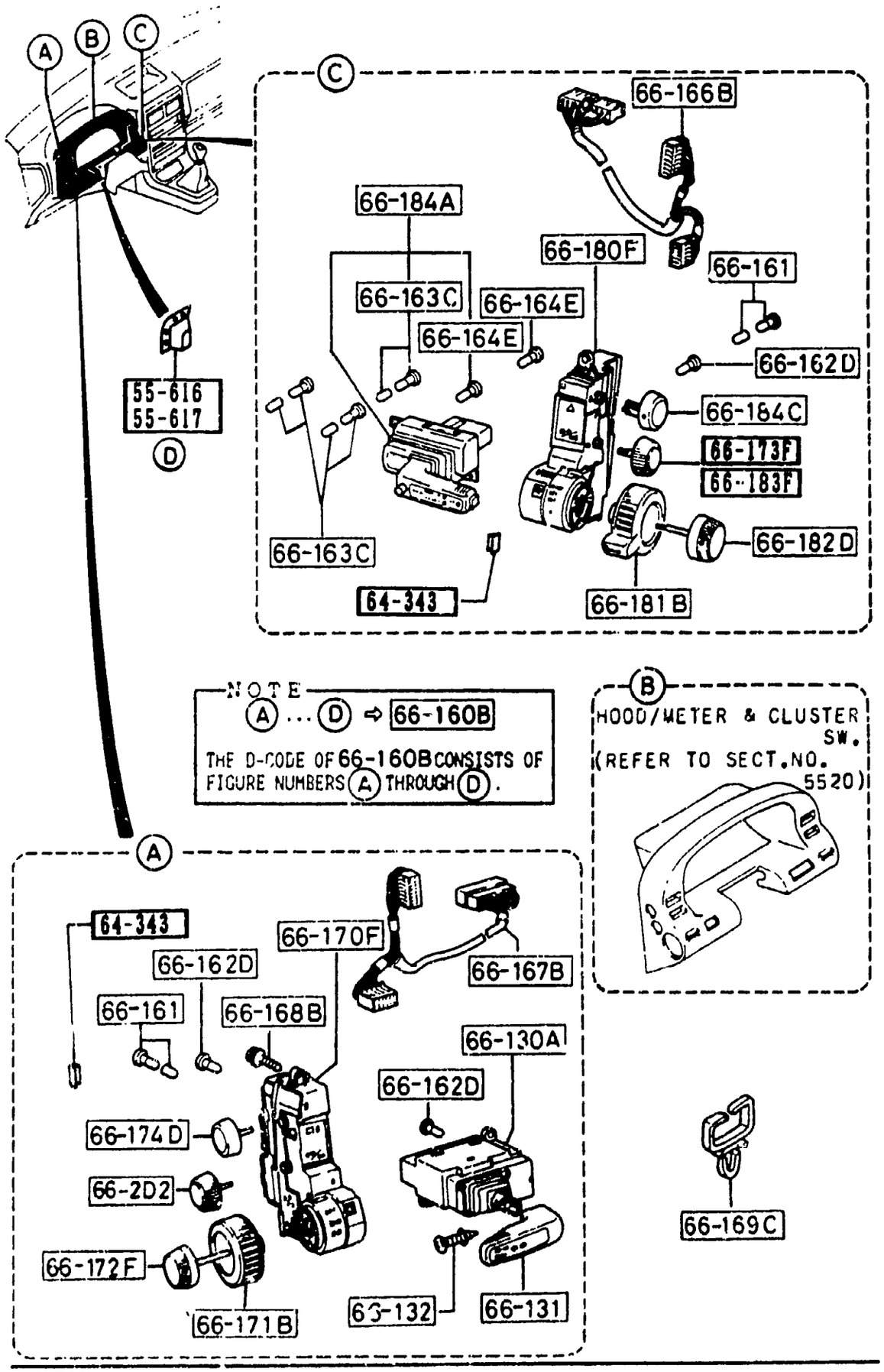

PART NO.	QTY	MODEL/RESTRICTION	MODEL/RESTRICTION	MODEL/RESTRICTION	FROM-TO
66-173F FC01-66-173	1	KNOB,SMALL--CRUSTER SW.			
66-174D FB01-66-174	1	KNOB,REAR DEFFOG-CLUSTER			
66-130F FC01-66-180	1	SWITCH,WIPER-CLUSTER SW. ((CPE))(W/O A.A.SUSP))			
FC07-66-180	1	((CPE))(A.A.SUSP))			
FC33-66-180	1	((CONVERTIBLE))(W/O AIR BAG))			
FC66-66-180	1	((CONVERTIBLE))(W/AIR BAG))			
66-181B FC01-66-181	1	KNOB,WIPER-CLUSTER SWITCH			
66-182D FC01-66-182	1	KNOB,WASHER-CLUSTER SW.			
66-183F FC01-66-183	1	KNOB,DUMMY-CRUSTER SWITCH GTU, GTUS, (W/O AUTO CRUISE CONT.) (CPE)			
66-184A FC01-66-34X	1	SWITCH,CRUISE-CRUSTER GXL, TURBO, (W/AUTO CRUISE CONT) (W/O AIR BAG)			
66-184C FB01-66-184	1	KNOB,HAZARD-CLASTER SW.			
66-2D2 FC02-66-173	1	KNOB,SWITCH-RR WIPER			

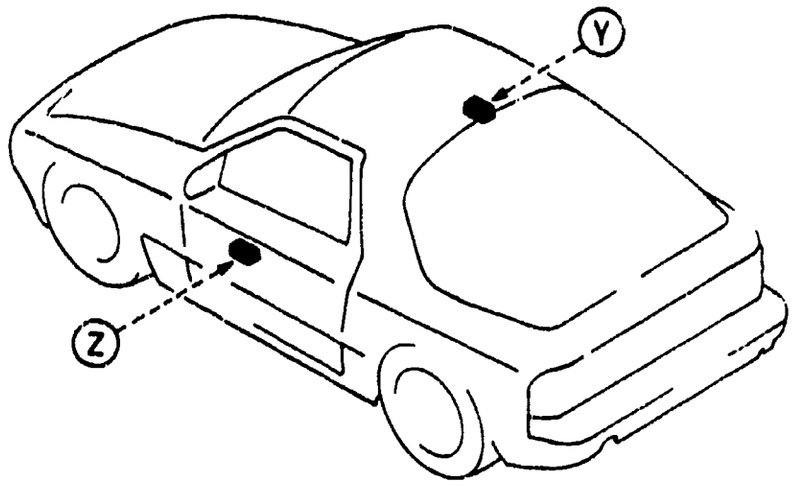

PART NO.	QTY	MODEL/RESTRICTION	MODEL/RESTRICTION	MODEL/RESTRICTION	FROM-TO
66-350		SWITCH,POWER WINDOW			
FC01-66-350B	1				
66-370		SWITCH,POWER WINDOW			
FC01-66-370B	1				

Z

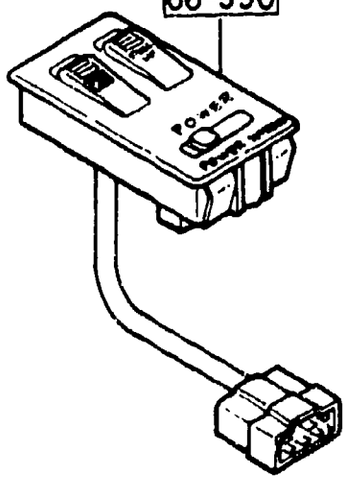

Y

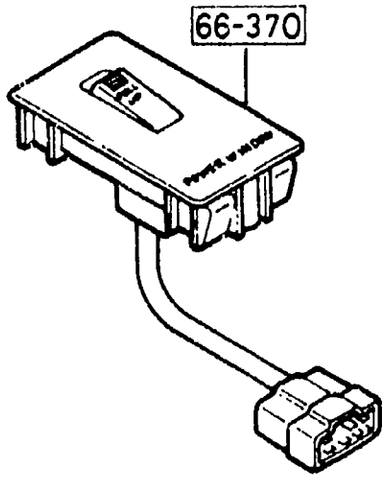

AUFA02

CAT. AUFA02-06

1992-05

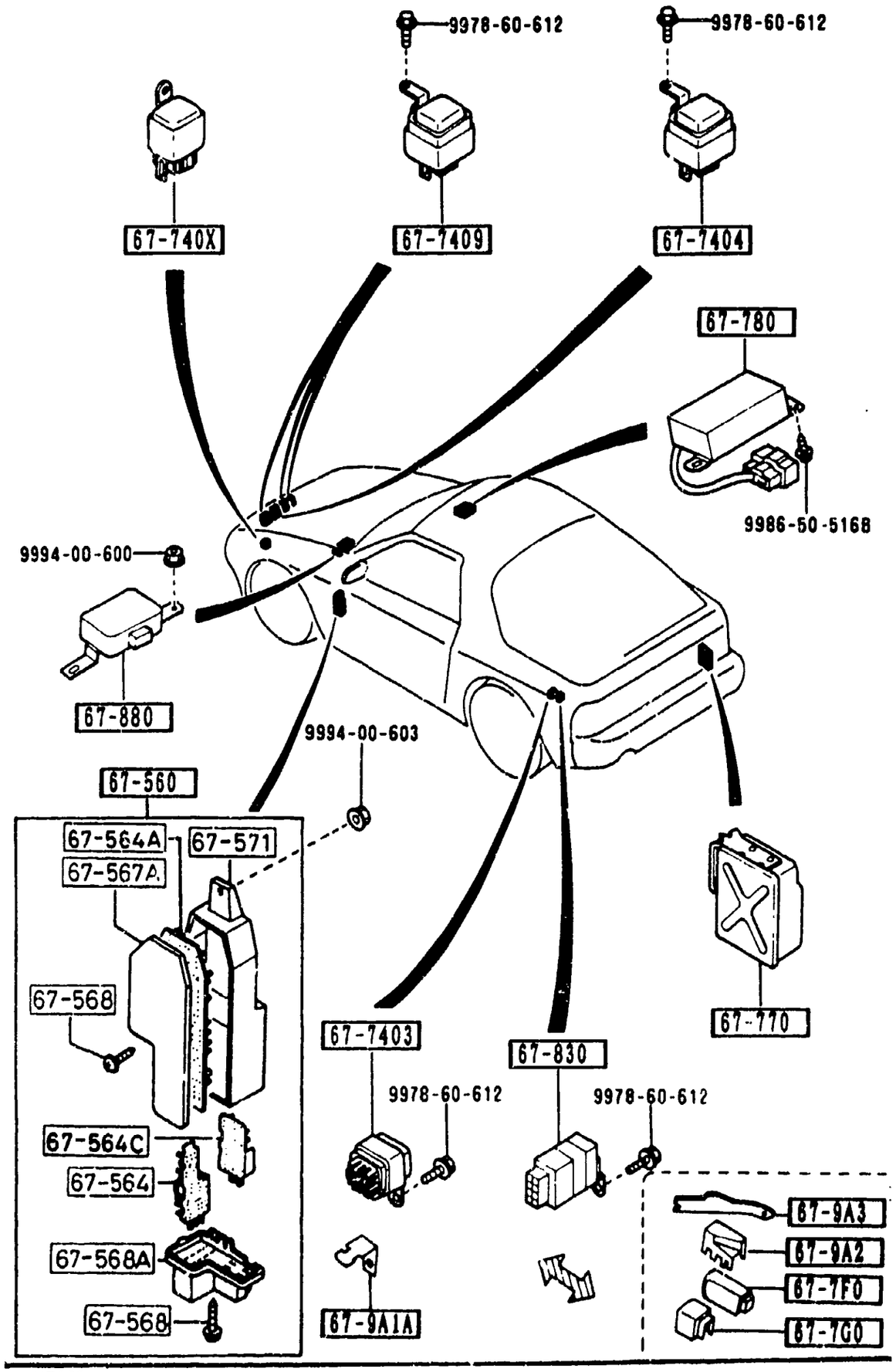

AUFA02

PART NO.	QTY	MODEL/RESTRICTION	MODEL/RESTRICTION	MODEL/RESTRICTION	FROM-TO
67-560		UNIT,CENTRAL CONTROL			
FC01-67-560	1	(W/O AIR BAG)			
FC66-67-560A	1	(W/AIR BAG)			
67-564		PLATE,FLASHER-C. P. UNIT			
FB01-67-564	1				
67-564A		BOARD,PRINT-BURGLAR ALARM			
FC01-67-564	1	(W/O AIR BAG)			
FC66-67-564	1	(W/AIR BAG)			
67-564C		BOARD,PRINT-DAY LIGHT UNIT			
FC15-67-564	1	NON USA,			
67-567A		COVER,MAIN-C. P. UNIT			
FC01-67-567	1				
67-568		SCREW,TAPPING			
FB01-67-569	2				
67-568A		COVER,SUB-C. P. UNIT			
FC01-67-568	1				
67-571		CASE,CONTROL UNIT			
FC01-67-566	1				
67-7F0		UNIT,DIAGNOSIS-AIR BAG			
NA01-67-7F0	1	(W/AIR BAG)			-9A01
NA01-67-7F0A	1	(W/AIR BAG)			9A01-
67-7G0		UNIT,BACK UP POWER-A.BAG			
NA01-67-7G0 AN(NA01-67-7G0A)	1				-0302
NA01-67-7G0A	1	(W/AIR BAG)			0302-
67-740X		RELAY & COVER,NORMAL CLOSE			
8311-67-740	1				
67-7403		RELAY,N.O.			
HR80-67-740	1	(REAR DEFOGGER RELAY)			

9A01 FC3###-803554
0302 FC3###-806493

CAT. AUFA02-06

1992-05

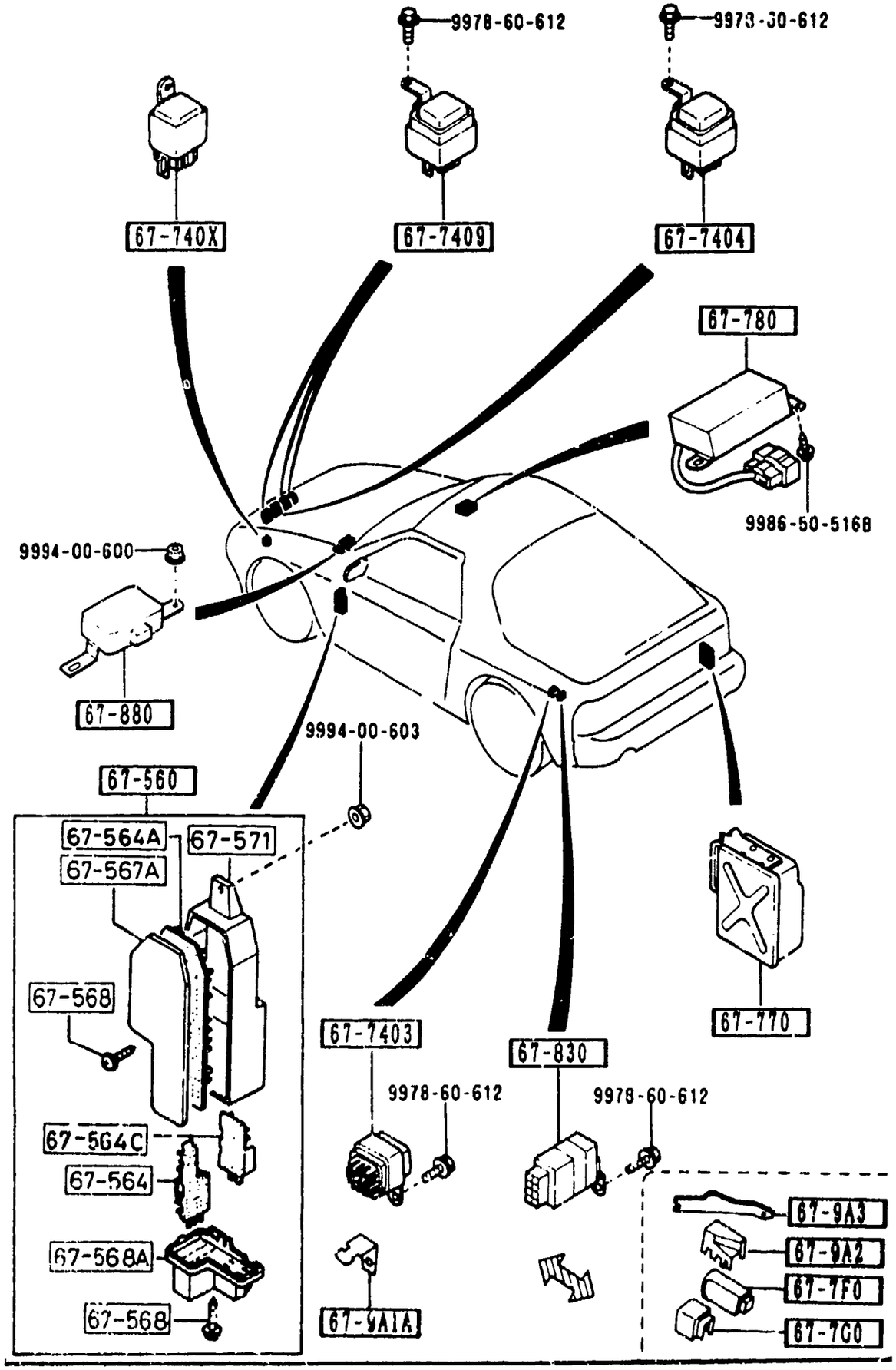

AUFA02

PART NO.	QTY	MODEL/RESTRICTION	MODEL/RESTRICTION	MODEL/RESTRICTION	FROM-TO
CONT'D		((CPE)>(W/O A.A.SUSP)>(W/O A.LOCK BRAKE))			
HR80-67-740	1	(REAR DEFOGGER RELAY) ((CPE)>(A.A.SUSP)>(W /O A.LOCK BRAKE)) ((CPE)>(W/O A.A.SUSP)>(A.LOCK BRAKE)) (CONVERTIBLE)			-9501
H440-67-740	1	(REAR DEFOGGER RELAY) ((CPE)>(A.A.SUSP)>(W /O A.LOCK BRAKE)) (CONVERTIBLE) ((CPE)>(W/O A.A.SUSP)>(A.LOCK BRAKE))			9501-
67-7404		RELAY,TRANSFER			
H432-67-740	1				
67-7409		RELAY'A',NORMAL OPEN -30A			
H430-67-740	1	GTU, GTUS, (W/O POWER WIND.)			
	2	GXL, TURBO, CONV, (W/POWER WIND.)			
67-770		CONT.BOX,ADJ.DUMPER			
FC04-67-770A	1	(A.A.SUSP)			
67-780		BOX,CON-AUTO SHOLDER BELTS			
FC01-67-780A	1	(CPE)			
67-830		UNIT,DOOR LOCK & TIMER			
FB01-67-830	1	((CPE)>(W/O A.A.SUSP)>(A.LOCK BRAKE)) ((CPE)>(A.A.SUSP)>(W /O A.LOCK BRAKE)) (CONVERTIBLE)			-9501
FC33-67-830	1	((CPE)>(W/O A.A.SUSP)>(A.LOCK BRAKE)) ((CPE)>(A.A.SUSP)>(W /O A.LOCK BRAKE)) (CONVERTIBLE)			9501-
67-880		BOX,CONTROL-E.C.P.S. SYS.			
FC01-67-880A	1	'89-GXL, GTUS, TURBO , (W/P.S.-VELOCITY SENSOR)			

9501 FC3***-707092

SECTION NAME INDEX (BODY)2/2

LO.NO	SEC.NO	SECTION NAME
4-C03	6100	HEATER
4-E03	6110	HEATER UNIT COMPONENTS
4-F03	6115	HEATER CONTROLS COMPONENTS
4-G03	6120	HEATER BLOWER COMPONENTS
4-I03	6130	AIR CONDITIONER
4-J03	6230	LIFT GATE MECHANISMS (COUPE)
4-M03	6300	WINDOW GLASSES (COUPE)
4-N03	6300A	WINDOW GLASSES (CONVERTIBLE)
4-C04	6330	SUNROOF (COUPE)
4-G04	6330A	SUNROOF (CONVERTIBLE)
4-M04	6600	SWITCHES & RELAYS (ENGINE)
4-G05	6610	DASHBOARD SWITCHES
4-H05	6611	COMBINATION SWITCH
4-I05	6612	CLUSTER SWITCH
4-L05	6615	POWER WINDOW SWITCHES
4-M05	6630	RELAYS & UNIT (BODY)
4-D06	6635	DOOR SWITCH & HORNS
4-E06	6640	AUTO CRUISE CONTROL SYSTEM
4-F06	6680	AUDIO SYSTEMS (RADIO & TAPE DECK) (COUPE)
4-K06	6680 A	AUDIO SYSTEMS (RADIO & TAPE DECK) (CONVERTIBLE)
4-M06	6682	AUDIO SYSTEMS (ANTENNA & SPEAKER) (COUPE)
4-D07	6682 A	AUDIO SYSTEMS (ANTENNA & SPEAKER) (CONVERTIBLE)
4-G07	6684	AUDIO SYSTEMS(NOISE SUPPRESSOR & EARTH CORD)
4-H07	6700	WIRING HARNESSES(FRONT & REAR)
4-N07	6701	WIRING HARNESSES(ENGINE & T/MISSION)
4-D08	6702	WIRING HARNESSES(DASHBOARD)
4-E08	6703	WIRING HARNESSES(DOOR,FLOOR/CEILING)
4-G08	6704	WIRING HARNESS CLAMPS
4-J08	6720	WINDSHIELD WASHER (1.5L & 2.5L)
4-L08	6720 A	WINDSHIELD WASHER (5.7L)
4-N08	6730	WINDSHIELD WIPERS
4-C09	6740	WIPER MOTOR COMPONENTS(FRONT)
4-D09	6750	WINDOW WIPER & WASHER (REAR)
4-G09	6760	WINDOW WIPER MOTOR COMPONENTS (REAR)
4-H09	6800	CEILING TRIMS (COUPE)
4-J09	6800A	CEILING TRIMS (CONVERTIBLE)
4-K09	6810	ROLLEBAR (CONVERTIBLE)
4-N09	6820	PILLAR TRIMS (COUPE)
4-F10	6820A	PILLAR TRIMS (CONVERTIBLE)
4-G10	6840	TRIMS & SCUFF PLATES (COUPE)
4-L10	6840A	TRIMS & SCUFF PLATES (CONVERTIBLE)
4-N10	6845	STRAGE BOX (COUPE) (GXL,TURBO)
4-D11	6860	FLOOR MATS & PADS (COUPE)
4-K11	6860A	FLOOR MATS & PADS (CONVERTIBLE)
4-	870	SERVICE TOOLS
4-D12	900	VISORS,ASSIST HANDLES & MIRRORS (COUPE)
4-H12	6900A	VISORS,ASSIST HANDLES & MIRRORS (CONVERTIBLE)
4-K12	6930	CAUTION PLATES & LABELS
4-N12	7250	QUARTER WINDOW & TRIMS
4-E13	7800	SPOILERS & RELATED PARTS
4-C14	7900	ACCESSORIES

CATLOG-NO= AUFA02-06

DATE. 1992-05

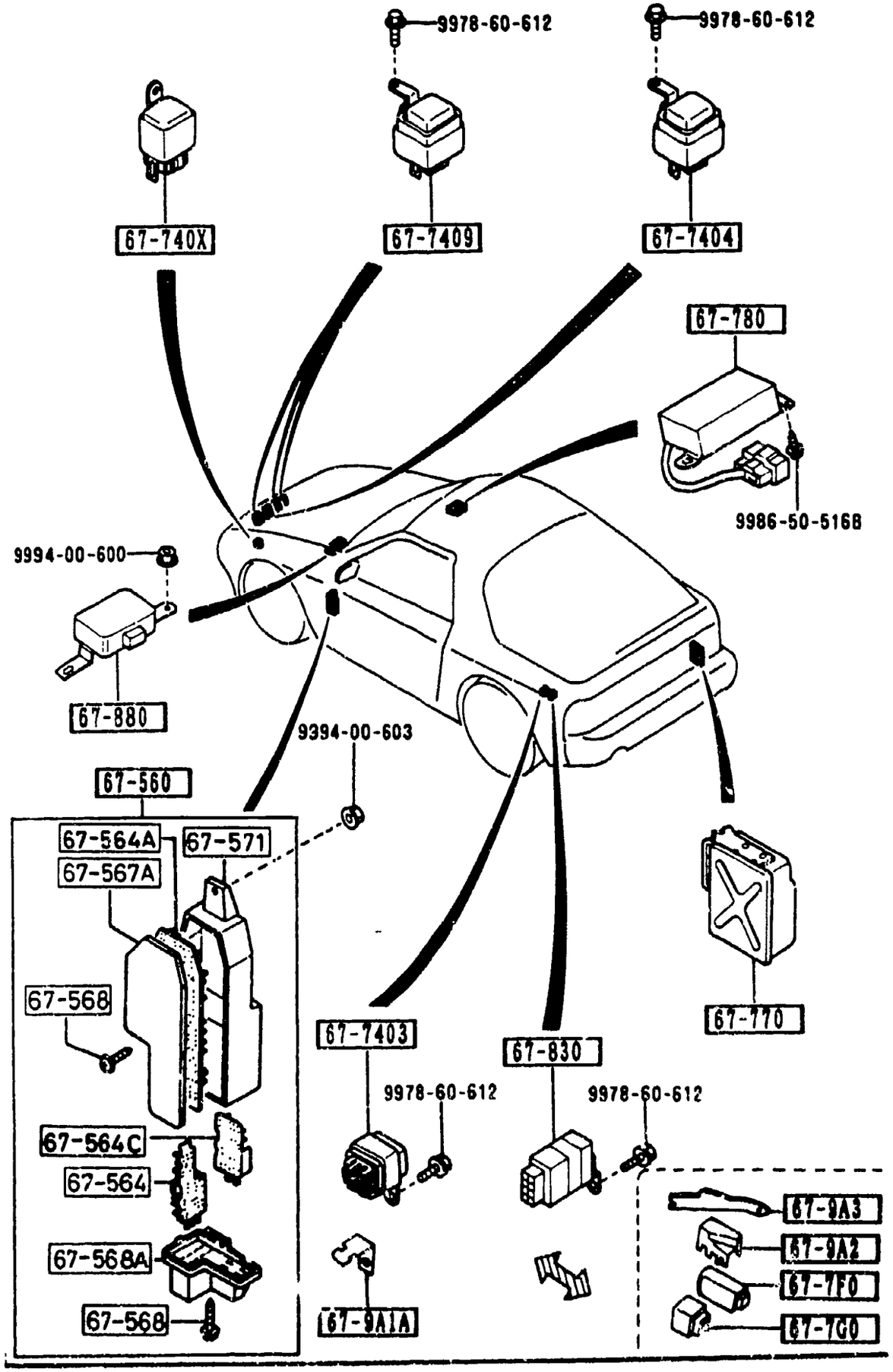

AUFA02

PART NO.	QTY	MODEL/RESTRICTION	MODEL/RESTRICTION	MODEL/RESTRICTION	FROM-TO
67-9A1A		BRACKET,RELAY			
FC33-67-9A1	1	((CPE)>(A.A.SUSP)>(W/O A.LOCK BRAKE)) (CONVERTIBLE) ((CPE)>(W/O A.A.SUSP)>(A.LOCK BRAKE))			9501-
67-9A2		COVER,RELAY			
FC66-67-9A2	1	(W/AIR BAG)			
67-9A3		LABEL,CAUTION-RELAY			
FC66-67-9A3	1	(W/AIR BAG)			

9501 FC3MMM-707092

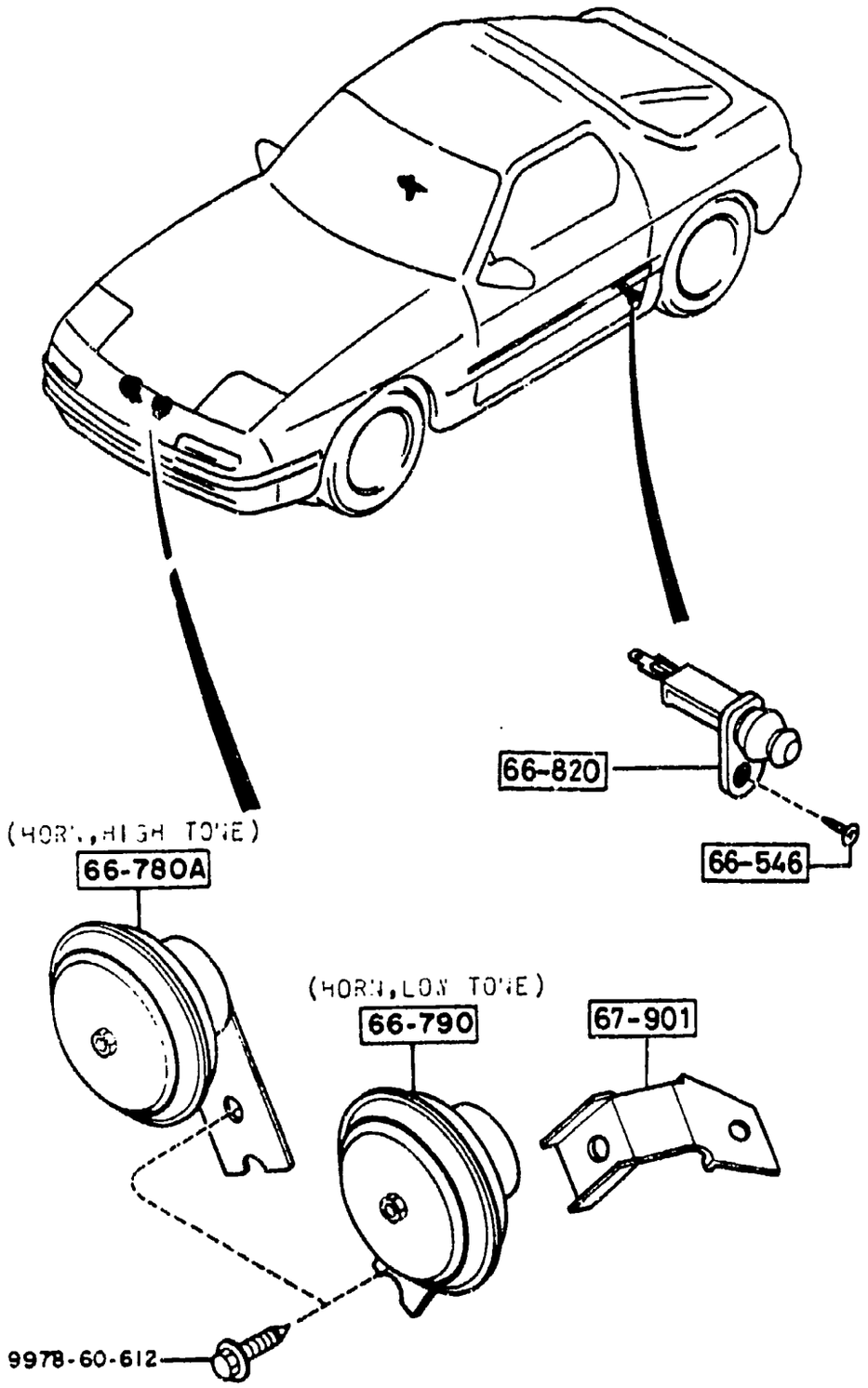

PART NO.	QTY	MODEL/RESTRICTION	MODEL/RESTRICTION	MODEL/RESTRICTION	FROM-TO
66-546		SCREW,DOOR SWITCH			
LA01-66-546	2				
66-780A		HORN,HIGH TONE			
FB03-66-780	1				
66-790		HORN,LOW TONE			
FB01-66-790	1				
66-820		SWITCH,DOOR			
FB02-66-540	2				
67-901		BRACKET,HORN			
FB05-66-792	1				

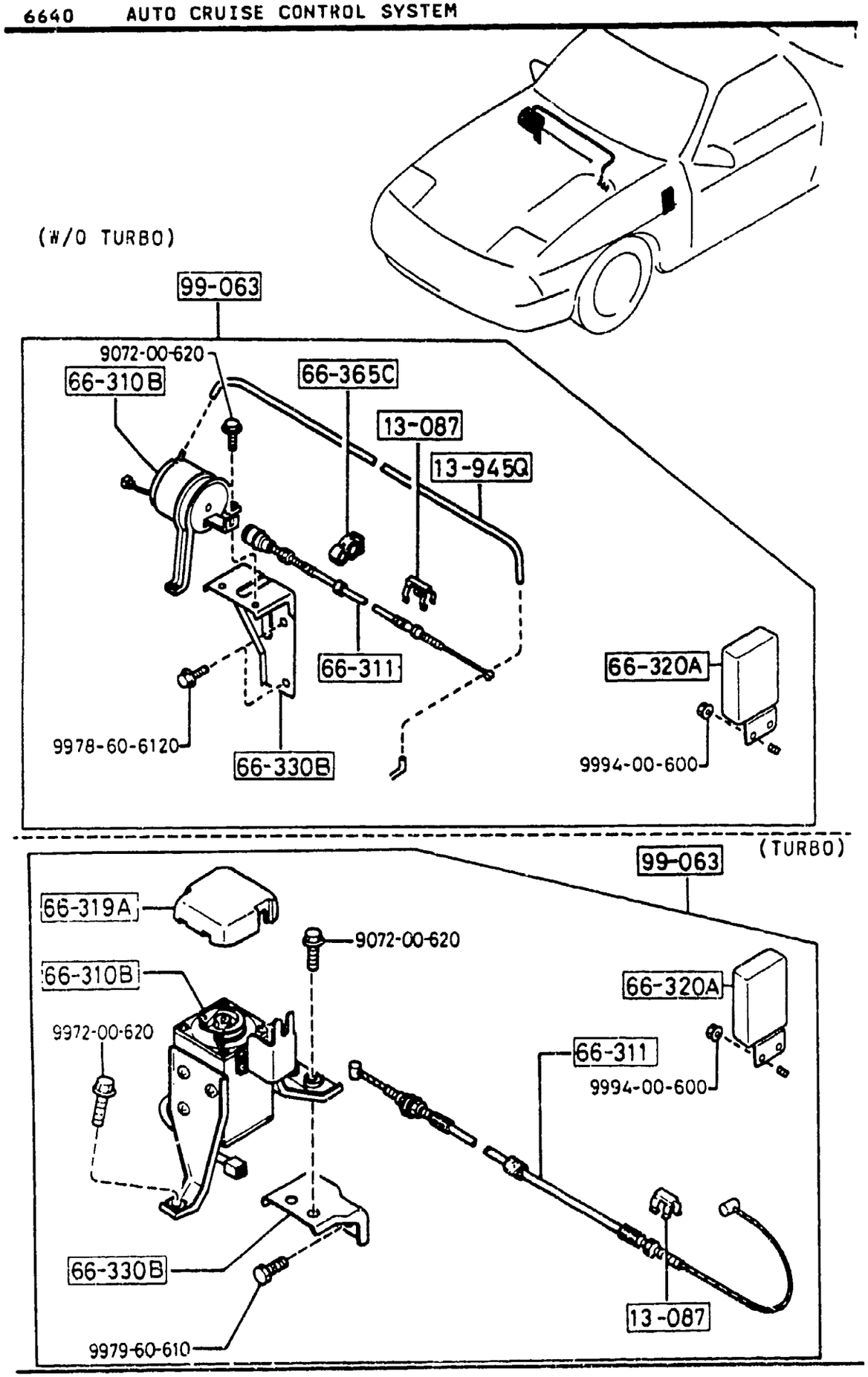

PART NO.	QTY	MODEL/RESTRICTION	MODEL/RESTRICTION	MODEL/RESTRICTION	FROM-TO
13-087		SPRING			
8871-13-087A	1				
13-945Q		PIPE			
FC01-66-361	1	(W/O TURBO)			
66-310B		ACTUATOR,A.C.C.			
FB01-66-310A	1	(W/O TURBO)			
F046-66-310B	1	(TURBO)			
66-311		WIRE,A.C.C.			
FB44-66-311A	1	(TURBO)			
FC01-66-311	1	(W/O TURBO)			
66-319A		COVER,ACTUATER			
B107-66-319	1	(TURBO)			
66-320A		UNIT,A.C.CONTROL			
FC01-66-320A	1	(W/O TURBO)			
FC17-66-320A	1	(TURBO)			
66-330B		BRACKET,A.C.C.BOX			
FB01-66-330	1	CALIF, (W/O SUBU ZERO SYSTEM)			
FB02-66-330	1	FED, (W/SUBU ZERO SYSTEM)			
66-365C		CLIP			
UB40-66-365	2	(W/O TURBO)			
99-063		A.C.C.SET			
8AF3-66-340	1	(W/O TURBO)			
8AF4-66-340	1	(TURBO)			

(AM/FM,W/O EQU.W/O C.D.) (THIS ILLUSTRATION CONSISTS OF 3 PAGES)

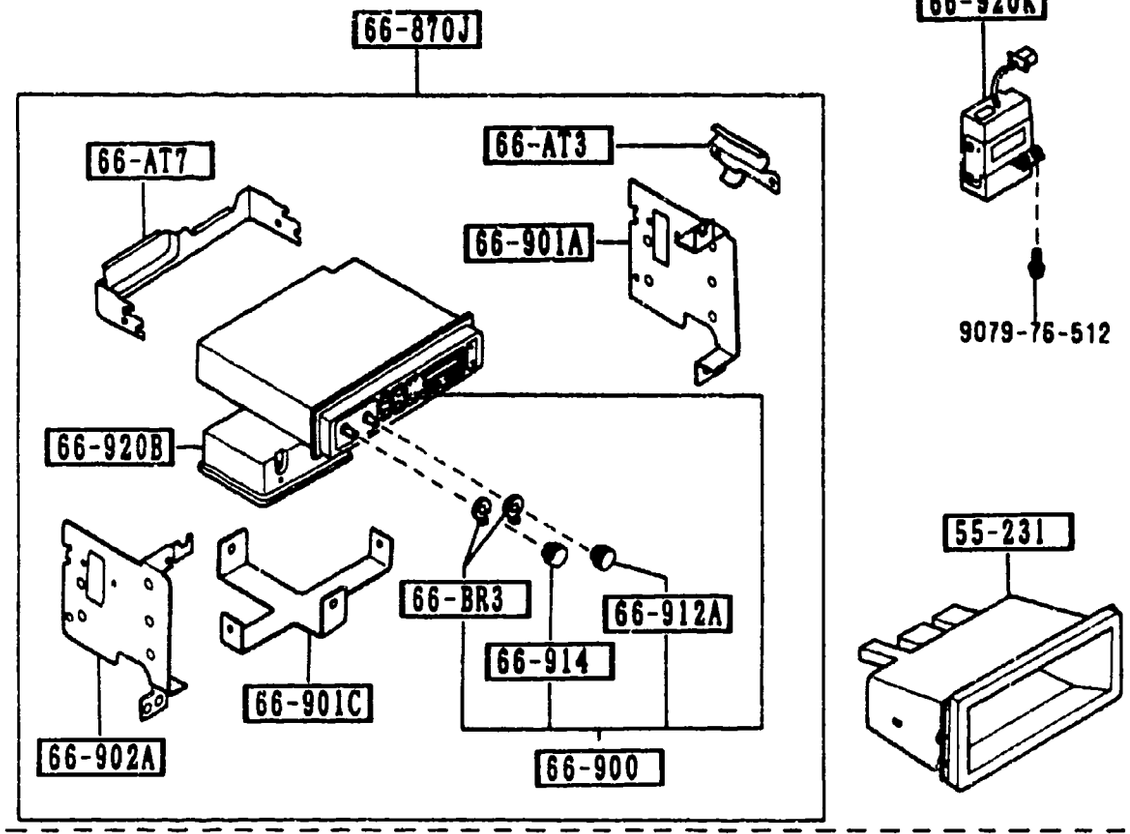

(AM/FM/CASSET COMB.W/O EQU.&C.D.)

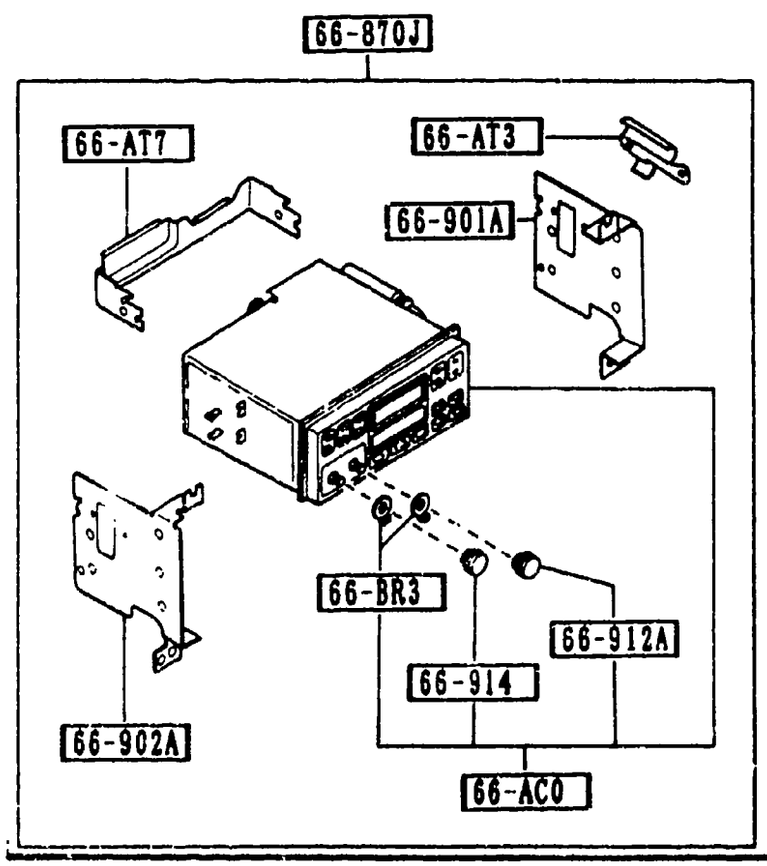

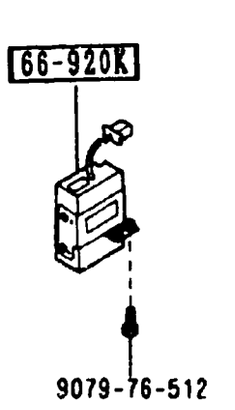

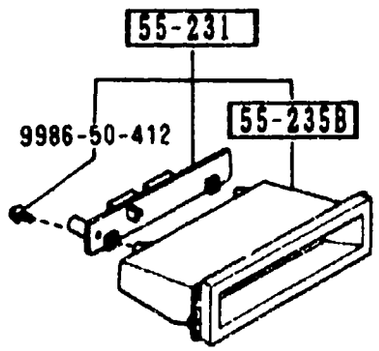

AUFA02 (CONT'D)

(AM/FM/CASSET CONB.W/EQU.W/O C.D.) (THIS ILLUSTRATION CONSISTS OF 3 PAGES)

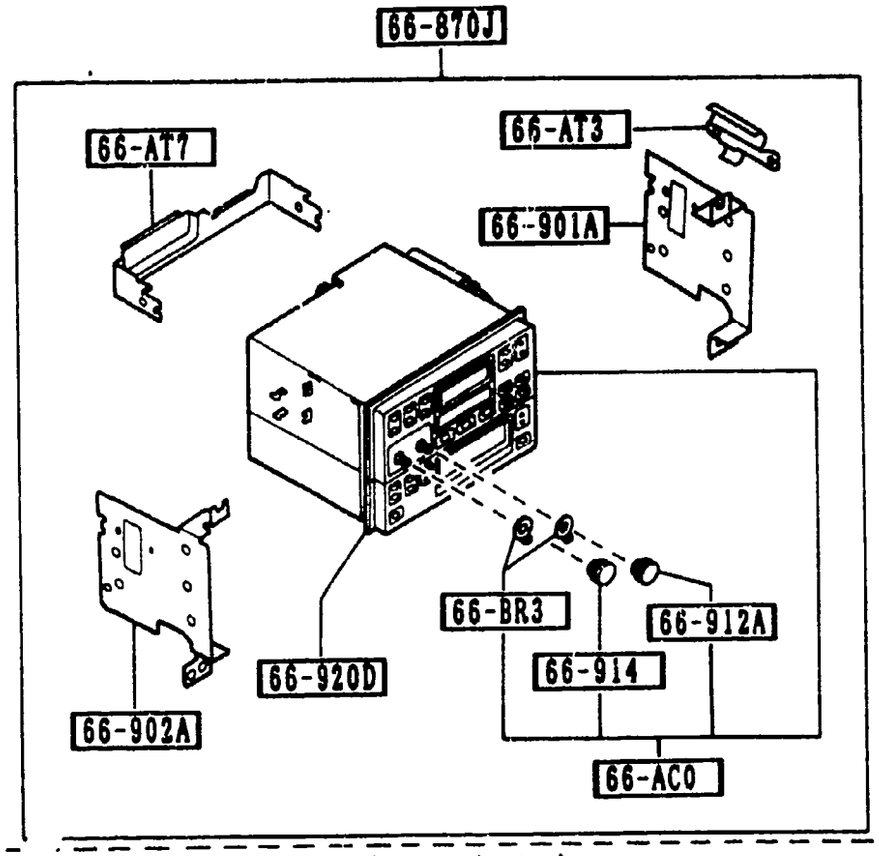

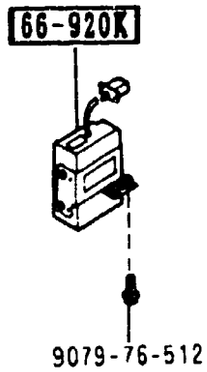

(AM/FM/CASSET COMB.W/EQU.W/C.D.)

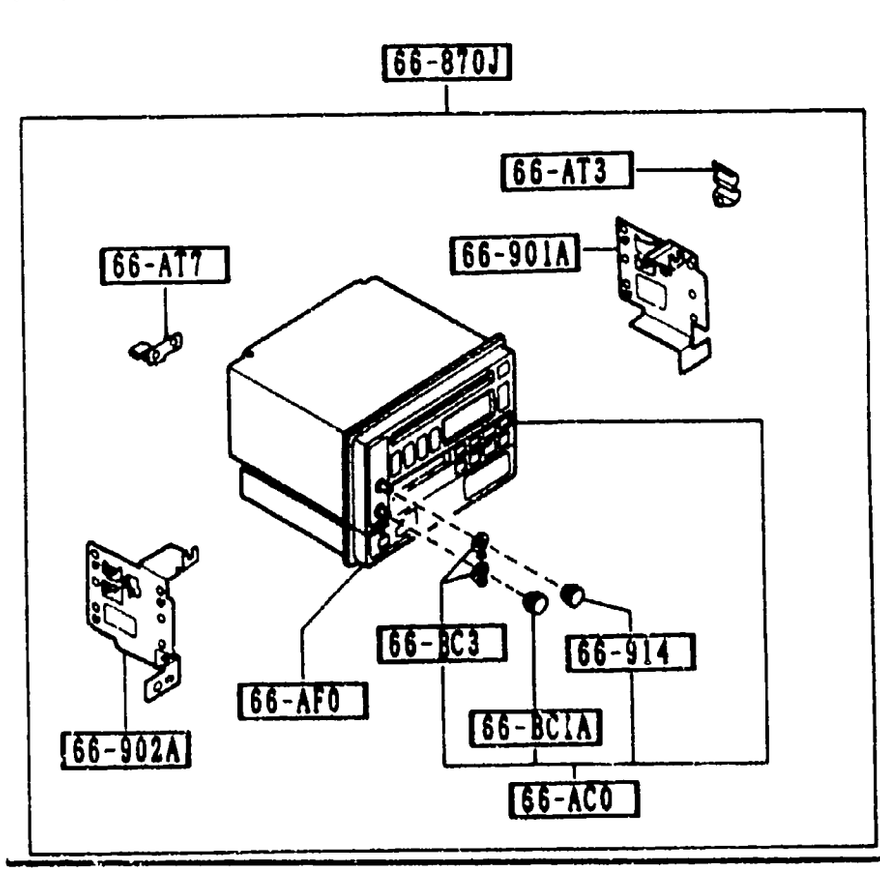

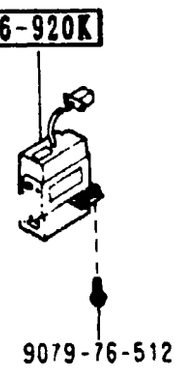

AUFA02 (CONT'D)

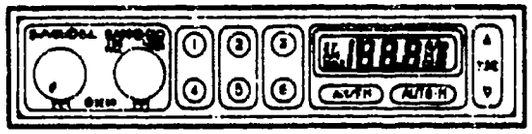

(AM/FM,W/O EQU.W/O C.D.)

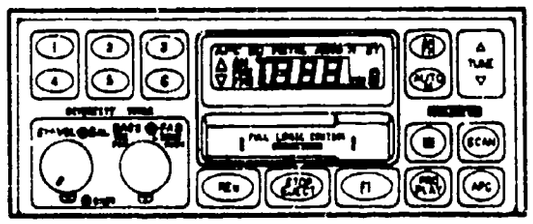

(AM/FM/CASSET COMB.W/O EQU.&C.D.)

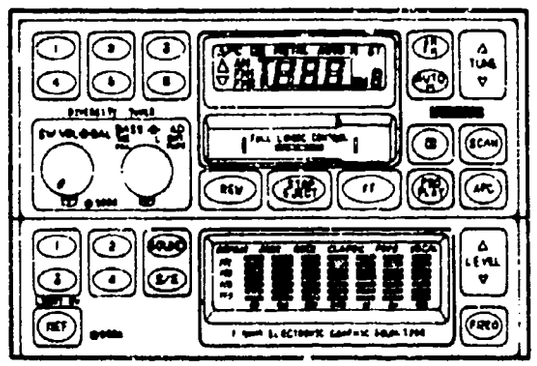

(AM/FM/CASSET CONB.W/EQU.W/O C.D.)

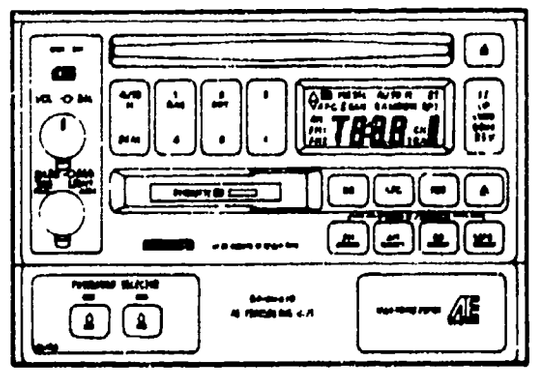

(AM/FM/CASSET COMB.W/EQU.W/C.D.)

(AM/FM,W/O EQU.W/O C.D.)

(THIS ILLUSTRATION CONSISTS OF 3 PAGES)

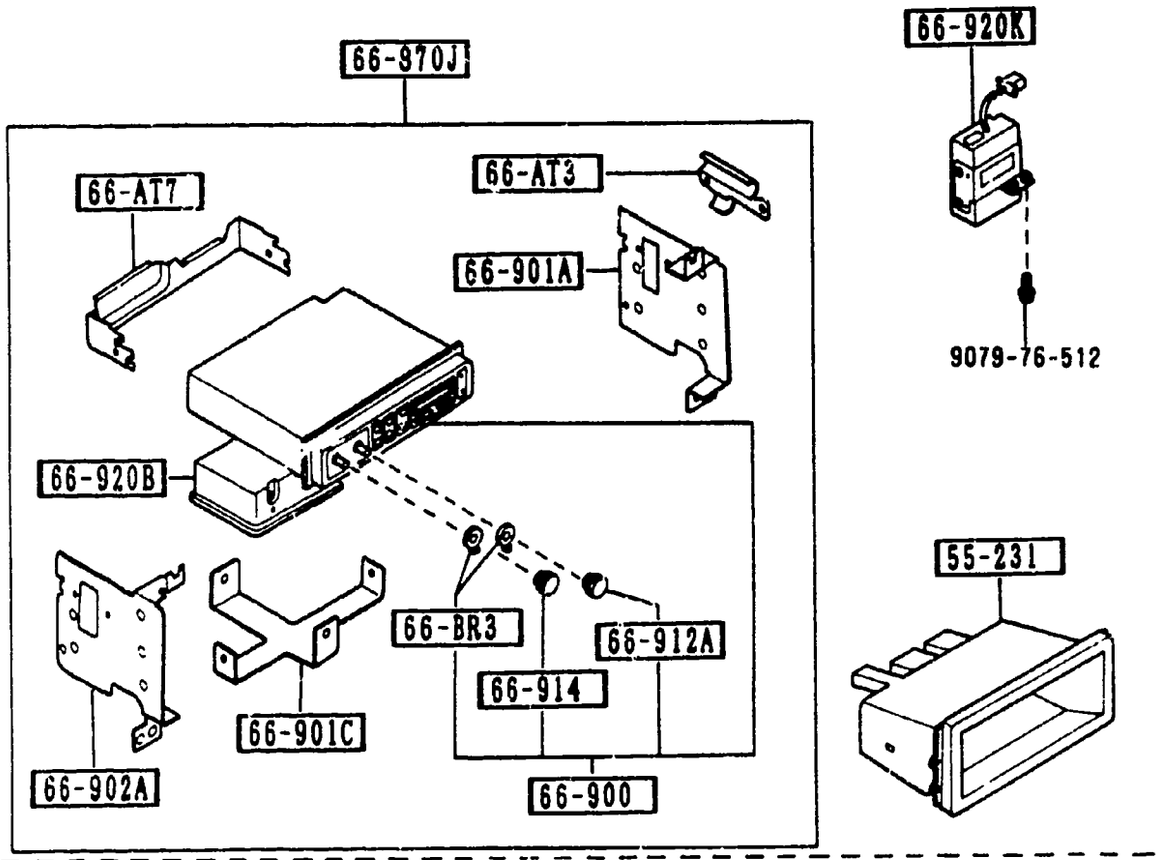

(AM/FM/CASSET COMB.W/O EQU.&C.D.)

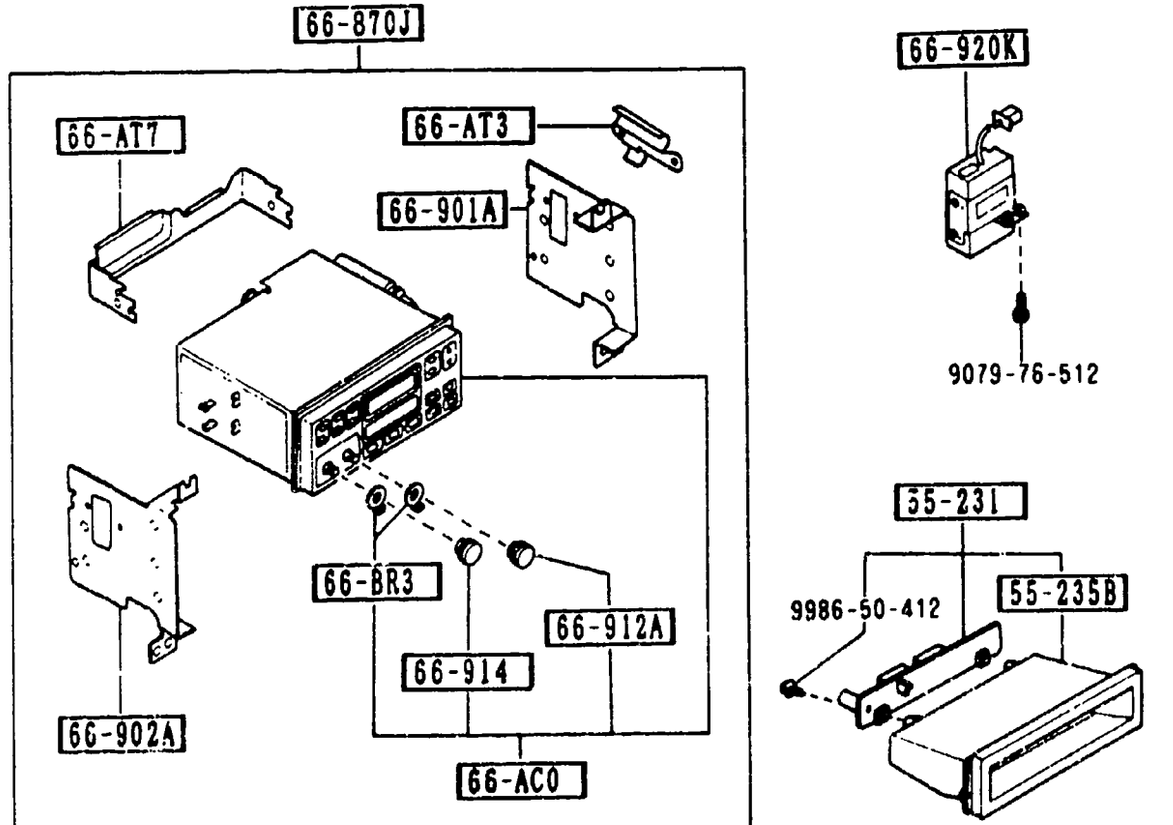

(CONT'D)

AUFA02

PART NO.	QTY	MODEL/RESTRICTION	MODEL/RESTRICTION	MODEL/RESTRICTION	FROM-TO
+---------+					
| 55-231 |		ORNAMENT,STEREO			
+---------+					
FC03-55-23Y	1	GTU, (AM/FM/DECK,W/O EQU. W/O C.DISC)			
FC04-55-235	1	GTUS, (AM/FM,W/O DECK,W/O EQU.W/O C.D)			
+---------+					
| 55-235B |		ORNAMENT,STEREO-UPPER			
+---------+					
FC03-55-235	1	GTU, (AM/FM/DECK,W/O EQU. W/O C.DISC)			
+---------+					
| 66-AC0 |		TUNER & DECK,COMB.			
+---------+					
FC04-66-AC0	1	GXL-OPT, TURBO-OPT, (W/DECK,W/C.DISC)			
FC03-66-AC0 A (FC03-66-AC0A)	1				-9801
FC03-66-AC0A	1	GTU, GXL, TURBO, (W/DECK,W/O C.DISC)			9801-
+---------+					
| 66-AF0 |		CONTROLLER,AE SYSTEM -DISC			
+---------+					
FC04-66-AF0	1	GXL-OPT, TURBO-OPT, (W/COMPACT DISC)			
+---------+					
| 66-AT3 |		BRACKET(R),ANTENNA			
+---------+					
FB03-66-AT3	1	GTU, GTUS, GXL, TURBO, (W/O COMPACT DISC)			
FC32-66-AT3	1	GXL-OPT, TURBO-OPT, (W/COMPACT DISC)			
+---------+					
| 66-AT7 |		BRACKET(RR),AUDIO			
+---------+					
FC01-66-AT7	1	GTU, GTUS, GXL, TURBO, (W/O COMPACT DISC)			
FC04-66-AT7	1	GXL-OPT, TURBO-OPT, (W/COMPACT DISC)			
+---------+					
| 66-BC1A |		KNOB,TONE-TUNER & DECK			
+---------+					
LA05-66-BC3	1	GXL-OPT, TURBO-OPT, (W/COMPACT DISC)			
+---------+					
| 66-BC3 |		KNOB,BALANCE-TUNER & DACK			
+---------+					
LA05-66-BC2	2	GXL-OPT, TURBO-OPT, (W/COMPACT DISC)			

9801 FC3####-800894

CAT. AUFA02-06

1992-05

(AM/FM/CASSET CONB.W/EQU.W/O C.D.) (THIS ILLUSTRATION CONSISTS OF 3 PAGES)

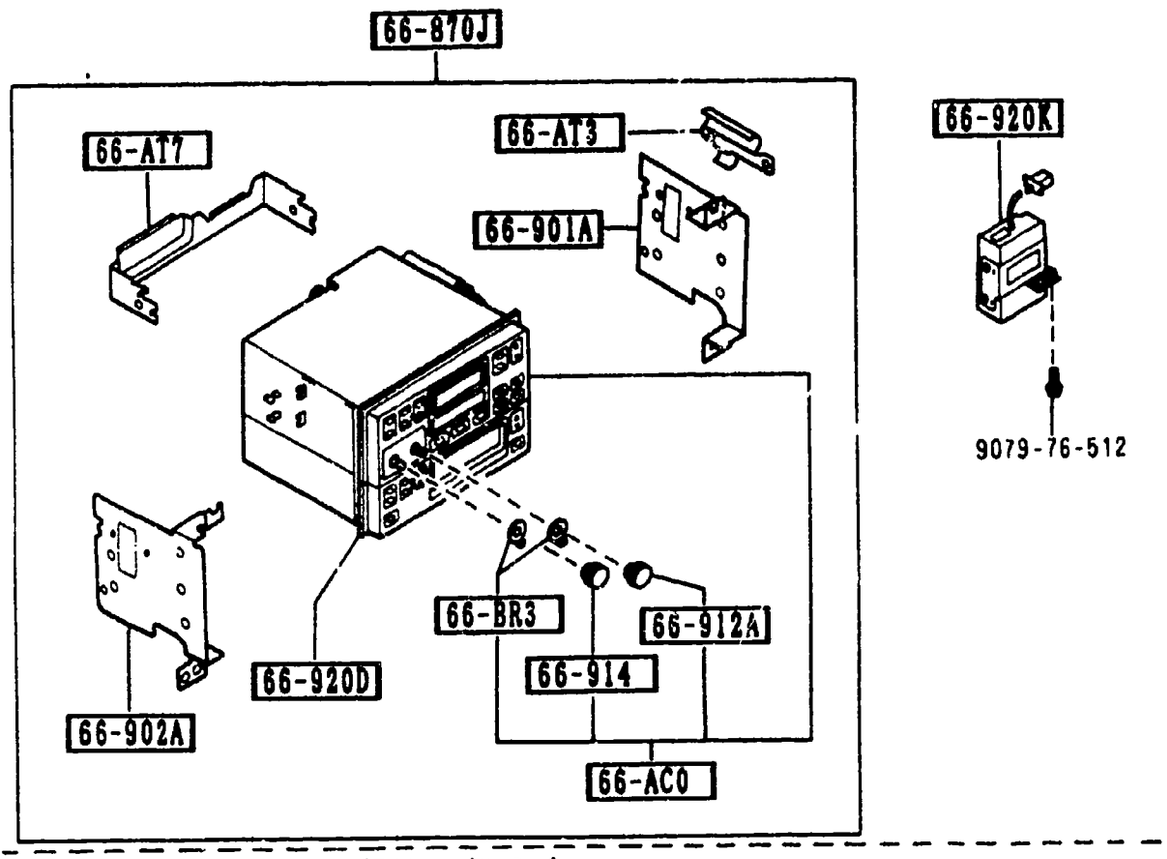

(AM/FM/CASSET COMB.W/EQU.W/C.D.)

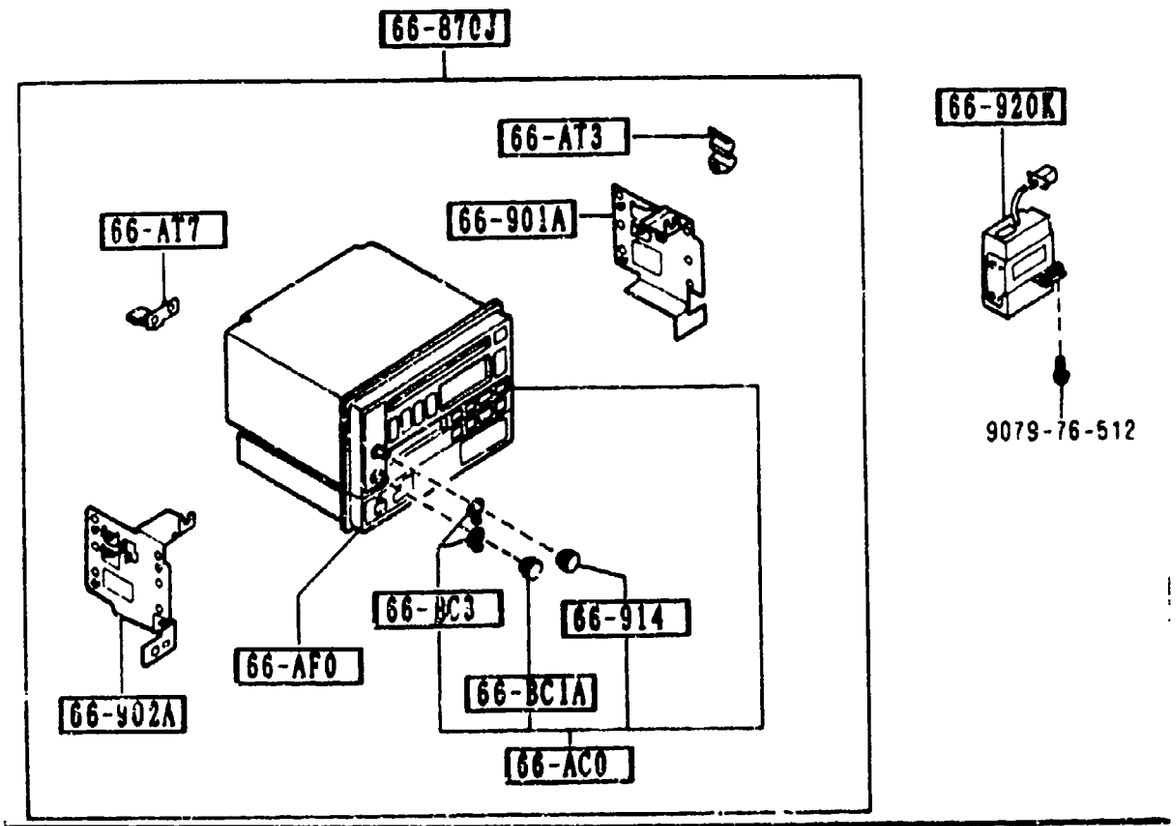

AUFA02

(CONT'D)

PART NO.	QTY	MODEL/RESTRICTION	MODEL/RESTRICTION	MODEL/RESTRICTION	FROM-TO
+---------+					
| 66-BR3 |		KNOB,BALANCE-TUNER			
+---------+					
FC01-66-BR3	2	GTU, GTUS, GXL, TURBO, (W/O COMPACT DISC)			
+---------+					
| 66-870J |		AUDIO SET			
+---------+					
FC04-66-9W0	1	GXL-OPT, TURBO-OPT, (AM/FM/DECK,W/EQU.W/C.DISC)			
FC02-66-9C0	1				-9801
A (FC02-66-9C0A)					
FC01-66-9S0	1				-9801
A (FC01-66-9S0A)					
FC03-66-9W0	1				-9801
A (FC03-66-9W0A)					
FC02-66-9C0A	1	GTU, (AM/FM/DECK,W/O EQU. W/O C.DISC)			9801-
FC01-66-9S0A	1	GTUS, (AM/FM,W/O DECK,W/O EQU.W/O C.D)			9801-
FC03-66-9W0A	1	GXL, TURBO, (AM/FM/DECK,W/EQU.W/O C.DISC)			9801-
+---------+					
| 66-900 |		TUNER			
+---------+					
FC01-66-AR0	1				-9801
A (FC01-66-AR0A)					
FC01-66-AR0A	1	GTUS, (AM/FM,W/O DECK,W/O EQU.W/O C.D)			9801-
+---------+					
| 66-901A |		BRACKET(R),TUNER			
+---------+					
FC01-66-AT1	1	GTU, GTUS, GXL, TURBO, (W/O COMPACT DISC)			
FC32-66-AT1	1	GXL-OPT, TURBO-OPT, (W/COMPACT DISC)			
+---------+					
| 66-901C |		BRACKET,AMP			
+---------+					
FC01-66-AT4	1	GTUS, (AM/FM,W/O DECK,W/O EQU.W/O C.D)			
+---------+					
| 66-902A |		BRACKET(L),TUNER			
+---------+					
FC01-66-AT2	1	GTU, GTUS, GXL, TURBO, (W/O COMPACT DISC)			

9801 FC3####-800894

CAT. AUFA02-06

1992-05

(THIS ILLUSTRATION CONSISTS OF 3 PAGES)

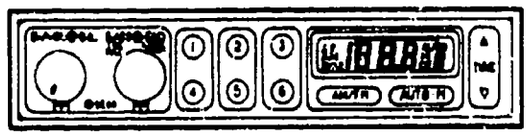

(AM/FM,W/O EQU.W/O C.D.)

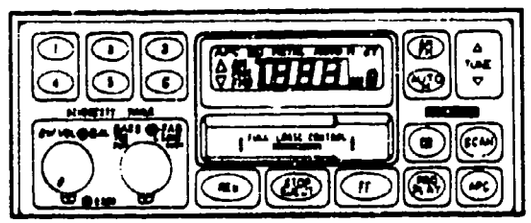

(AM/FM/CASSET COMB.W/O EQU.&C.D.)

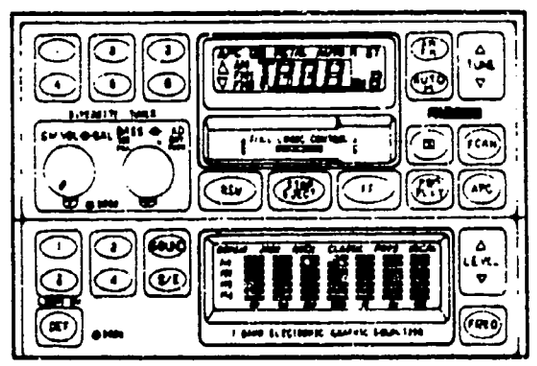

(AM/FM/CASSET CONB.W/EQU.W/O C.D.)

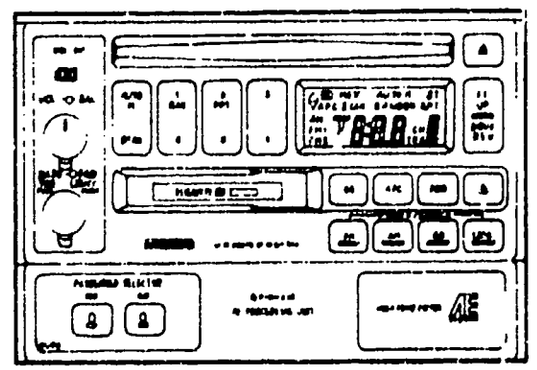

(AM/FM/CASSET COMB.W/EQU.W/C.D.)

PART NO.	QTY	MODEL/RESTRICTION	MODEL/RESTRICTION	MODEL/RESTRICTION	FROM-TO
CONT'D FC32-66-AT2	1	GXL-OPT, TURBO-OPT, (W/COMPACT DISC)			
+---------+ | 66-912A | +---------+		KNOB,TONE-TUNER			
FC01-66-BR2	1	GTU, GTUS, GXL, TURBO, (W/O COMPACT DISC)			
+---------+ | 66-914 | +---------+		KNOB,VOLUME-TUNER			
FC04-66-BC1	1	GXL-OPT, TURBO-OPT, (W/COMPACT DISC)			
FC01-66-BR1	1	GTU, GTUS, GXL, TURBO, (W/O COMPACT DISC)			
+---------+ | 66-920B | +---------+		AMP,POWER-AUDIO			
FC01-66-920	1	GTUS, (AM/FM,W/O DECK,W/O EQU.W/O C.D)			
+---------+ | 66-920D | +---------+		EQUALIZER,GRAPHIC			
FC03-66-AE0	1	GXL, TURBO, (AM/FM/DECK,W/EQU.W/O C.DISC)			
+---------+ | 66-920K | +---------+		AMP,WOOFER-AUDIO			
FC04-66-920	1	GXL-OPT, TURBO-OPT, (W/COMPACT DISC)			
FC02-66-920	1				-9822
A (FC02-66-920A)					
FC02-66-920A	1	GTU, GTUS, GXL, TURBO, (W/O COMPACT DISC)			9822-

9822 FC3***-801600

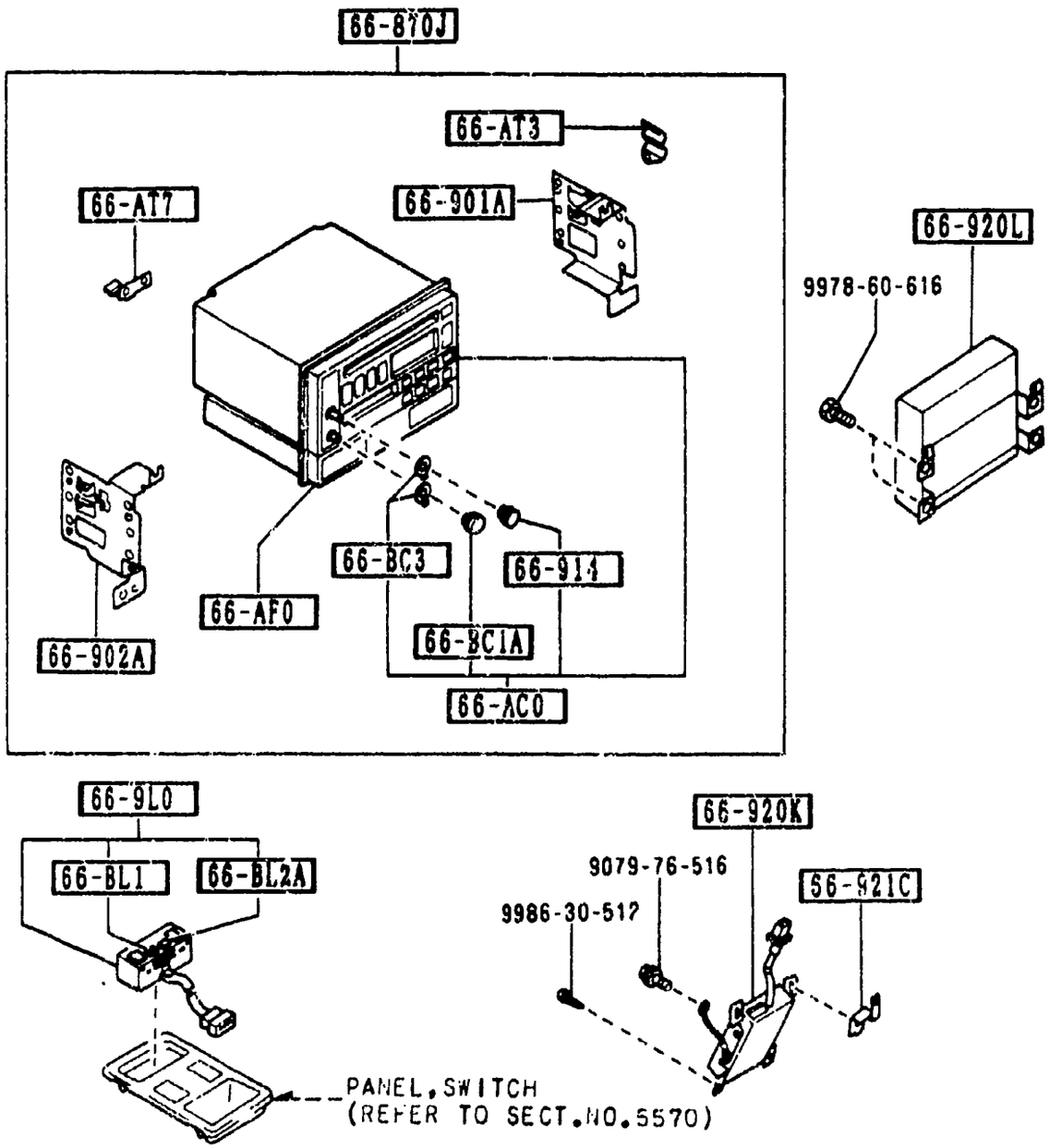

PART NO.	QTY	MODEL/RESTRICTION	MODEL/RESTRICTION	MODEL/RESTRICTION	FROM-TO
66-AC0		TUNER & DECK,COMB.			
FC04-66-AC0	1				
66-AF0		CONTROLLER,AE SYSTEM -DISC			
FC32-66-AF0	1	(W/O AIR BAG)			
FC66-66-AF0	1	(W/AIR BAG)			
66-AT3		BRACKET(R),ANTENNA			
FC32-66-AT3	1				
66-AT7		BRACKET(RR),AUDIO			
FC04-66-AT7	1				
66-BC1A		KNOB,TONE-TUNER & DECK			
LA05-66-BC3	1				
66-BC3		KNOB,BALANCE-TUNER & DACK			
LA05-66-BC2	2				
66-BL1		KNOB,VOL.-REMOTE CONTROL			
F055-66-BL1	1				
66-BL2A		KNOB,SURROUND-REMOTE CONT			
F055-66-BL2	1				
66-870J		AUDIO SET			
FC32-66-9W0	1	(W/O AIR BAG)			
FC66-66-9W0	1	(W/AIR BAG)			
66-9L0		CONTROL,REMOTE-AUDIO			
F055-66-9L0A	1				
66-901A		BRACKET(R),TUNER			
FC32-66-AT1	1				
66-902A		BRACKET(L),TUNER			
FC32-66-AT2	1				
66-914		KNOB,VOLUME-TUNER			
FC04-66-BC1	1				

6680 A AUDIO SYSTEMS (RADIO & TAPE DECK) (CONVERTIBLE)

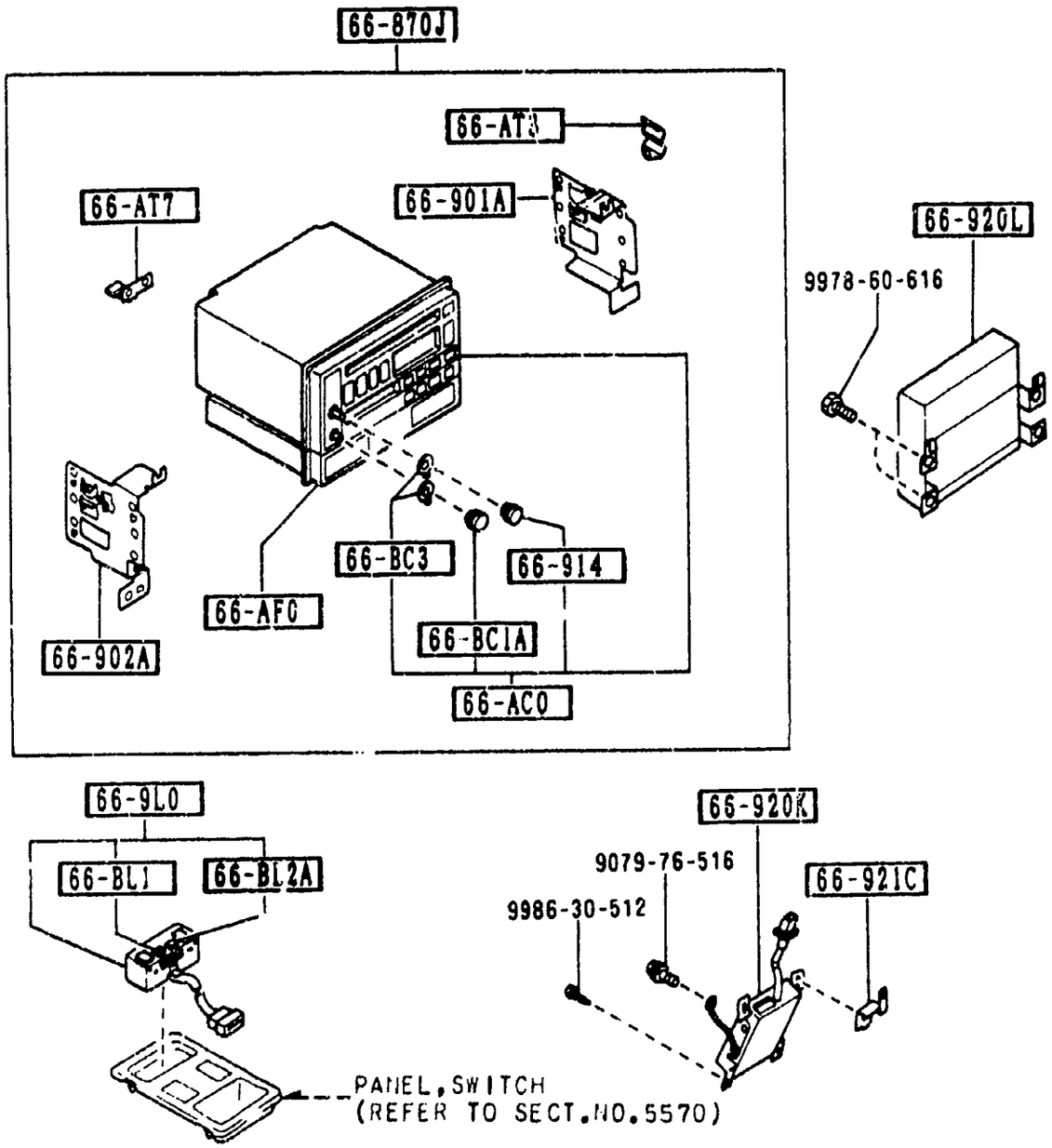

6680 A-2 * AUDIO SYSTEMS (RADIO & TAPE DECK) (CONVERTIBLE)

PART NO.	QTY	MODEL/RESTRICTION	MODEL/RESTRICTION	MODEL/RESTRICTION	FROM-TO
66-920K		AMP,WOOFER-AUDIO			
FC14-66-920	1	(W/O AIR BAG)			
FC68-66-920	1	(W/AIR BAG)			
66-920L		AMP,PILLOW-AUDIO			
FC32-66-920	1				
66-921C		BRACKET,AMP-AE SYSTEM			
FB76-66-921	1	(W/O AIR BAG)			

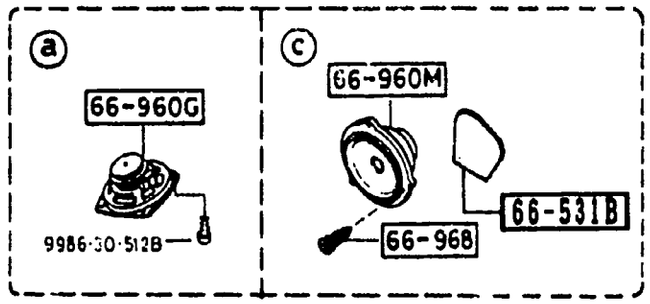

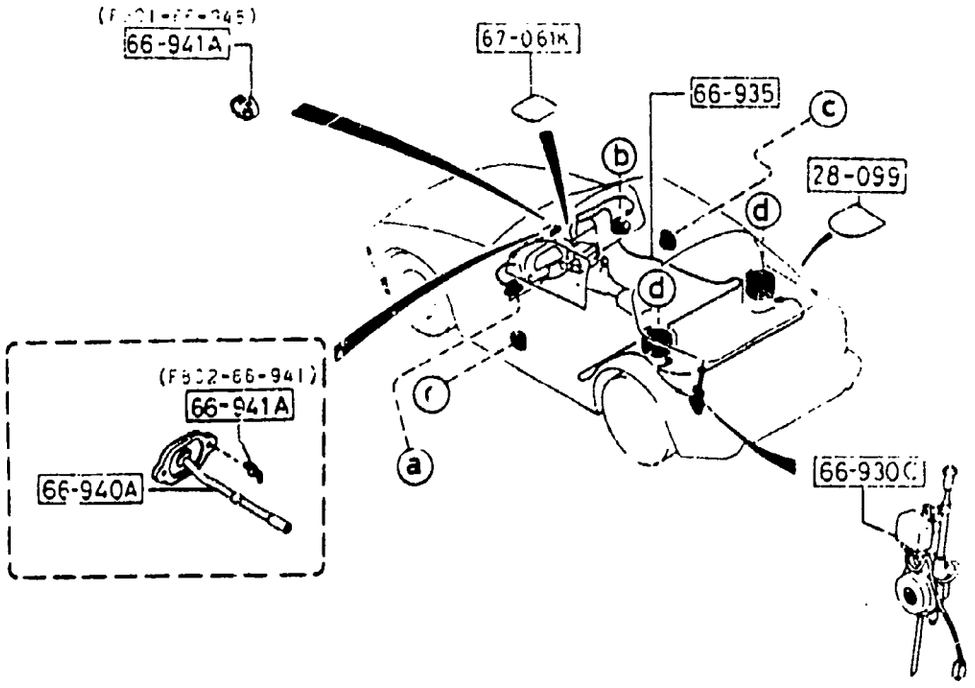

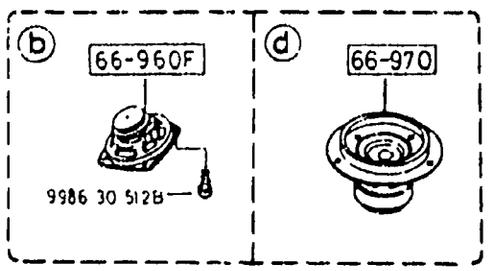

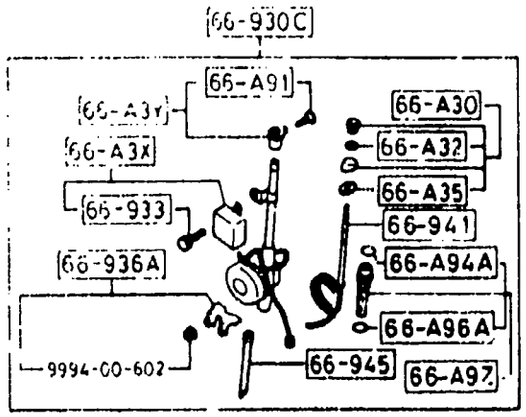

PART NO.	QTY	MODEL/RESTRICTION	MODEL/RESTRICTION	MODEL/RESTRICTION	FROM-TO
28-099		PAD,REAR SUSPENSION			
FB01-28-099	2				
66-A3X		RELAY,MOTOR-ANTENNA			
FB01-66-A3X	1				-0401
HE02-66-A3X	1				0401-
66-A3Y		PLATE,EARTH-MOTOR ANTENNA			
FB01-66-A3Y	1				
66-A30		NUT,MOUNTING-ANTENNA			
FB01-66-A30	1				
66-A32		RING,'O'-MOUNTING ANTENNA			
FB01-66-A32	1				
66-A35		PAD,MOUNTING-ANTENNA			
FB01-66-A35	1				
66-A9Z		INSULATOR,ROD-ANTENNA			
HE02-66-A9Z	1				
66-A91		SCREW,EARTH PLATE-ANTENNA			
FB01-66-A91	1				
66-A94A		RING,'O'-ANTENNA			
HE02-66-A94	1				
66-A96A		RING,'O'-ANTENNA			
HE02-66-A96	1				
66-531B		PAD			
FC01-66-9B6	2				
66-930C		ANTENNA,MOTOR-RADIO			
FB01-66-930A AN(FB01-66-930B)	1				-0401
FB01-66-930B	1				0401-
66-933		SCREW,ANTENNA			
FB01-66-A92	1				

0401 FC3***-806597

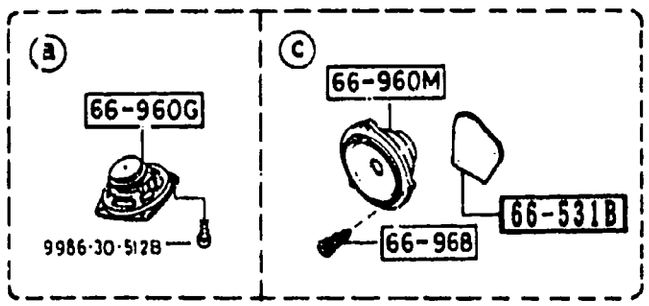

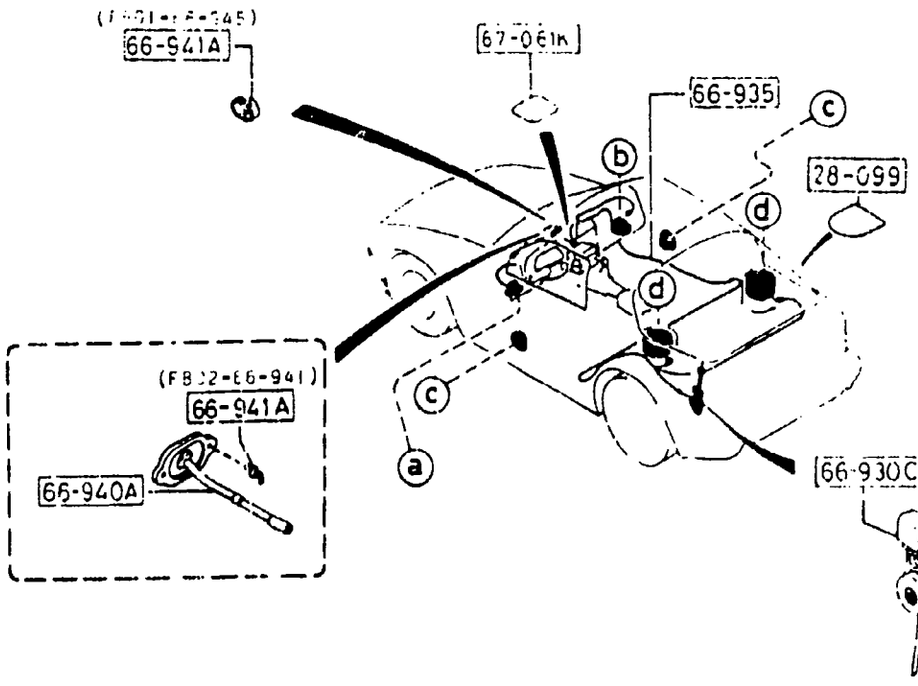

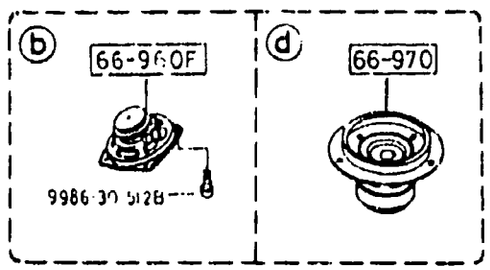

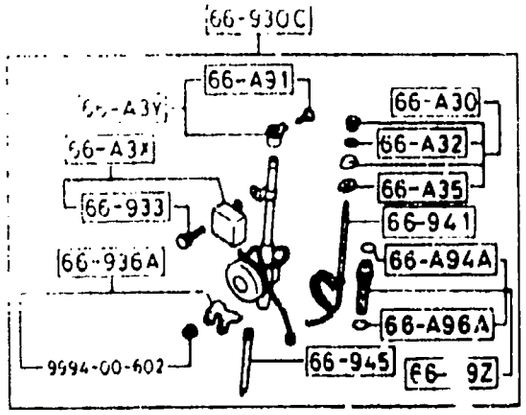

PART NO.	QTY	MODEL/RESTRICTION	MODEL/RESTRICTION	MODEL/RESTRICTION	FROM-TO
66-935		FEEDER-ANTENNA			
FC01-66-940B	1				
66-936A		BRKT,MOTOR-ANTENA			
FB01-66-A9X	1				
66-940A		FEEDER & COVER			
FB02-66-940B	1				
66-941		POLE,ANTENNA			
FB01-66-A90	1				
66-941A		CLIP			
FB02-66-941	2				
FB01-66-945	1				
66-945		PIPE			
FB01-66-A9Y	1				
66-9		SPEAKER(R),LOUD-FRT			
FC02-66-960A	1	GTU, GTUS, GXL, TURBO, (W/O COMPACT DISC)			
FC03-66-960A	1	GXL-OPT, TURBO-OPT, (W/COMPACT DISC)			
66-960G		SPFAKER(L),LOUD-FRONT			
FC01-66-960	1	GTU, GTUS, GXL, TURBO, (W/O COMPACT DISC)			
FC04-66-960	1	GXL-OPT, TURBO-OPT, (W/COMPACT DISC)			
66-960M		SPEAKER,DOOR			
FC07-66-960	2	GTUS, GTU, (AM/FM,W/O DECK,W/O EQU.W/O C.D) (AM/FM DECK,W/O EQU. W/O C.DISC)			
FC08-66-960	2	GXL-OPT, TURBO-OPT, (AM FM DECK,W/EQU.W/ C.DISC)			
FC12-66-960	2	GXL, TURBO, (AM/FM DECK,W/EQU.W/O C.DISC)			

LO.NO	SEC.NO	SECTION NAME
4-C03	6100	HEATER
4-E03	6110	HEATER UNIT COMPONENTS
4-F03	6115	HEATER CONTROLS COMPONENTS
4-G03	6120	HEATER BLOWER COMPONENTS
4-I03	6130	AIR CONDITIONER
4-J03	6230	LIFT GATE MECHANISMS (COUPE)
4-M03	6300	WINDOW GLASSES (COUPE)
4-N03	6300A	WINDOW GLASSES (CONVERTIBLE)
4-C04	6330	SUNROOF (COUPE)
4-G04	6330A	SUNROOF (CONVERTIBLE)
4-M04	6600	SWITCHES & RELAYS (ENGINE)
4-G05	6610	DASHBOARD SWITCHES
4-H05	6611	COMBINATION SWITCH
4-I05	6612	CLUSTER SWITCH
4-L05	6615	POWER WINDOW SWITCHES
4-M05	6630	RELAYS & UNIT (BODY)
4-D06	6635	DOOR SWITCH & HORNS
4-E06	6640	AUTO CRUISE CONTROL SYSTEM
4-F06	6680	AUDIO SYSTEMS (RADIO & TAPE DECK) (COUPE)
4-K06	6680 A	AUDIO SYSTEMS (RADIO & TAPE DECK) (CONVERTIBLE)
4-M06	6682	AUDIO SYSTEMS (ANTENNA & SPEAKER) (COUPE)
4-D07	6682 A	AUDIO SYSTEMS (ANTENNA & SPEAKER) (CONVERTIBLE)
4-G07	6684	AUDIO SYSTEMS(NOISE SUPPRESSOR & EARTH CORD)
4-H07	6700	WIRING HARNESSES(FRONT & REAR)
4-N07	6701	WIRING HARNESSES(ENGINE & T/MISSION)
4-D08	6702	WIRING HARNESSES(DASHBOARD)
4-E08	6703	WIRING HARNESSES(DOOR,FLOOR/CEILING)
4-G08	6704	WIRING HARNESS CLAMPS
4-J08	6720	WINDSHIELD WASHER (1.5L & 2.5L)
4-L08	6720 A	WINDSHIELD WASHER (5.7L)
4-N08	6730	WINDSHIELD WIPERS
4-C09	6740	WIPER MOTOR COMPONENTS(FRONT)
4-D09	6750	WINDOW WIPER & WASHER (REAR)
4-G09	6760	WINDOW WIPER MOTOR COMPONENTS (REAR)
4-H09	6800	CEILING TRIMS (COUPE)
4-J09	6800A	CEILING TRIMS (CONVERTIBLE)
4-K09	6810	ROLLEBAR (CONVERTIBLE)
4-N09	6820	PILLAR TRIMS (COUPE)
4-F10	6820A	PILLAR TRIMS (CONVERTIBLE)
4-G10	6840	TRIMS & SCUFF PLATES (COUPE)
4-L10	6840A	TRIMS & SCUFF PLATES (CONVERTIBLE)
4-N10	6845	STRAGE BOX (COUPE) (GXL,TURBO)
4-D11	6860	FLOOR MATS & PADS (COUPE)
4-K11	6860A	FLOOR MATS & PADS (CONVERTIBLE)
4-C12	6870	SERVICE TOOLS
4-D12	6900	VISORS,ASSIST HANDLES & MIRRORS (COUPE)
4-H12	6900A	VISORS,ASSIST HANDLES & MIRRORS (CONVERTIBLE)
4-K12	6930	CAUTION PLATES & LABELS
4-	7250	QUARTER WINDOW & TRIMS
4-	800	SPOILERS & RELATED PARTS
4-C14	7900	ACCESSORIES

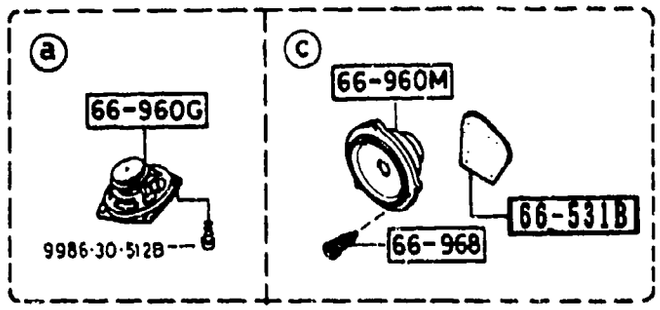

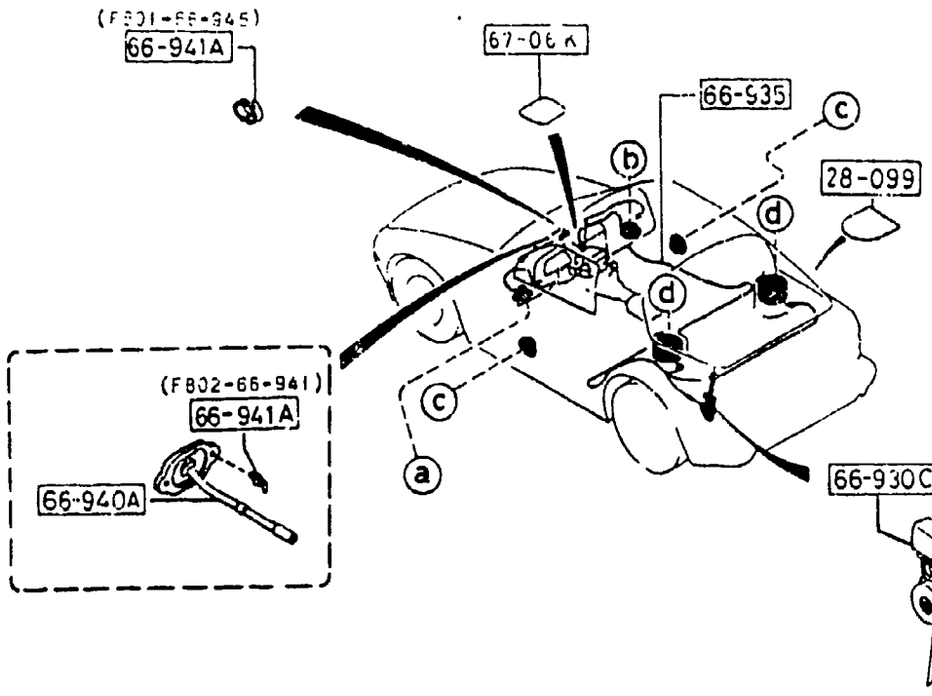

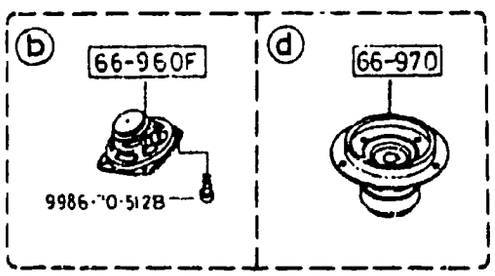

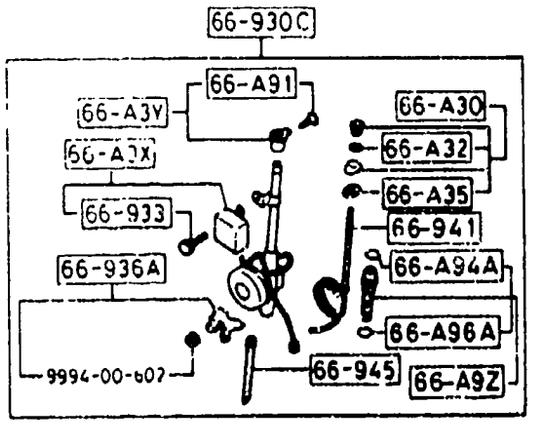

PART NO.	QTY	MODEL/RESTRICTION	MODEL/RESTRICTION	MODEL/RESTPICTION	FROM-TO
66-968		SCREW,LOUD SPEAKER-DOOR			
FC02-66-968	6				
66-970		SPEAKER,LOUD-REAR			
FC09-66-960	2	GTU, GTUS, GXL, TURBO, (W/O COMPACT DISC)			
FC10-66-960	2	GXL-OPT, TURBO-OPT, (W/COMPACT DISC)			
67-061K		PAD,PROTECTOR			
G001-67-061	1				

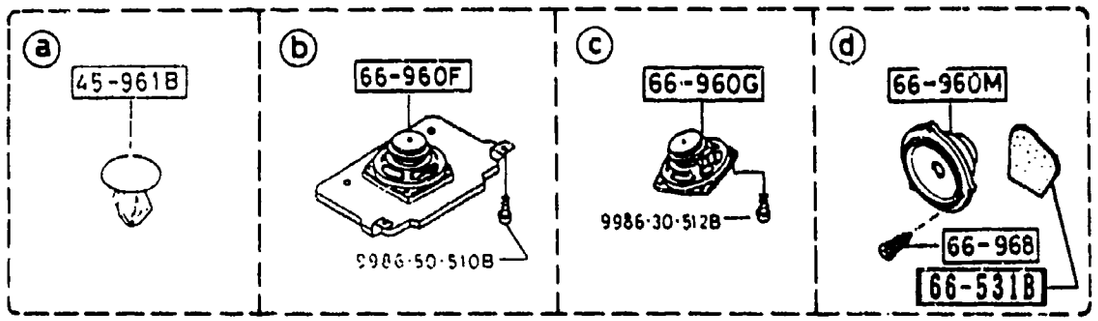

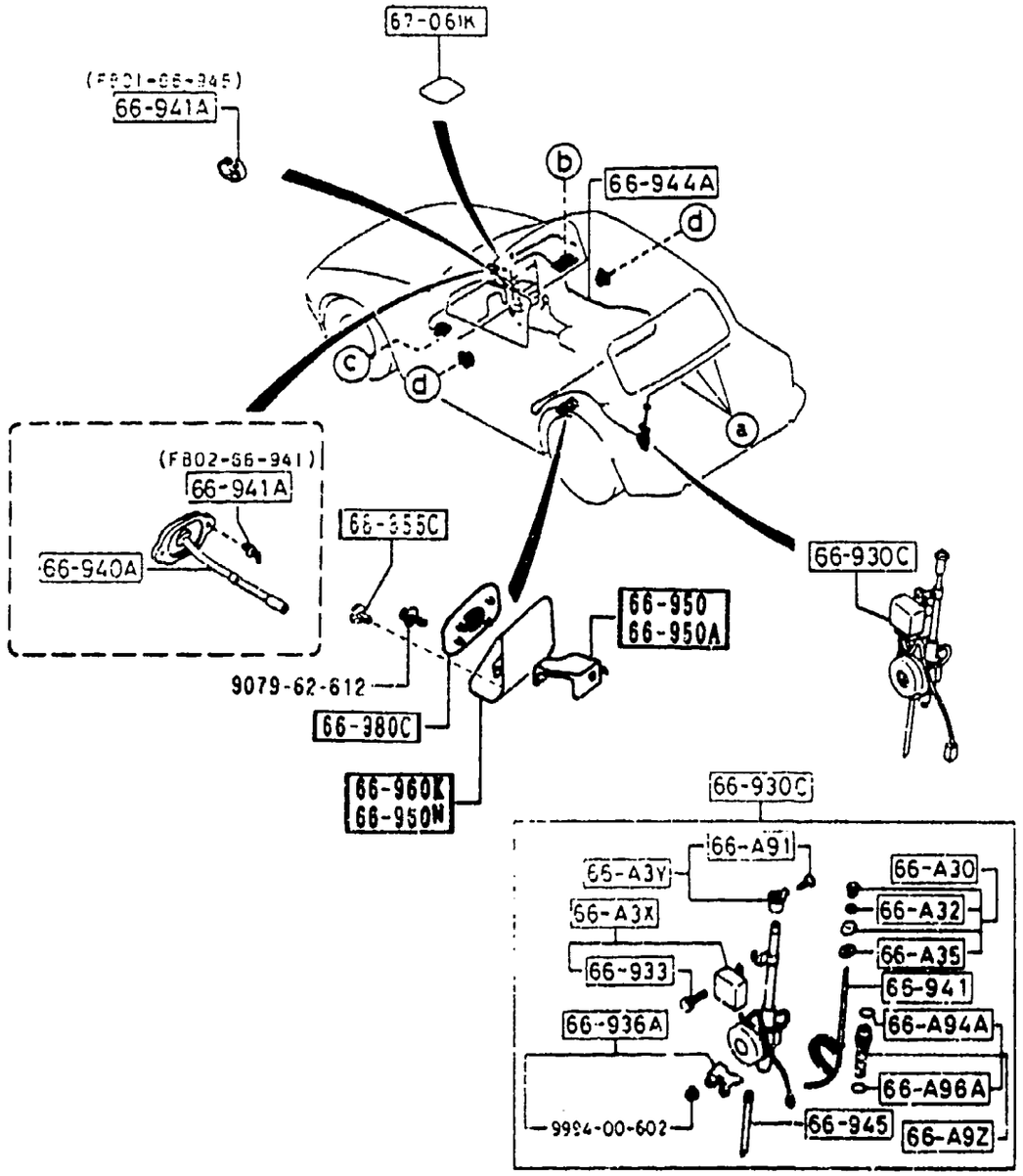

PART NO.	QTY	MODEL/RESTRICTION	MODEL/RESTRICTION	MODEL/RESTRICTION	FROM-TO
45-961B		CAP			
H002-45-961	3				
66-A3X		RELAY,MOTOR-ANTENNA			
HE02-66-A3X	1				
66-A3Y		PLATE,EARTH-MOTOR ANTENNA			
FB67-66-A3Y	1				
66-A30		NUT,MOUNTING-ANTENNA			
FB67-66-A30	1				
66-A32		RING,'O'-MOUNTING ANTENNA			
FB01-66-A32	1				
66-A35		PAD,MOUNTING-ANTENNA			
FB67-66-A35	1				
66-A9Z		INSULATOR,ROD-ANTENNA			
HE02-66-A9Z	1				
66-A91		SCREW,EARTH PLATE-ANTENNA			
FB01-66-A91	1				
66-A94A		RING,'O'-ANTENNA			
HE02-66-A94	1				
66-A96A		RING,'O'-ANTENNA			
HE02-66-A96	1				
66-531B		PAD			
FC01-66-986	2				
66-930C		ANTENNA,MOTOR-RADIO			
FB67-66-930	1				
66-933		SCREW,ANTENNA			
FB01-66-A92	1				
66-936A		BRKT,MOTOR-ANTENA			
FB01-66-A9X	1				

4-D 7

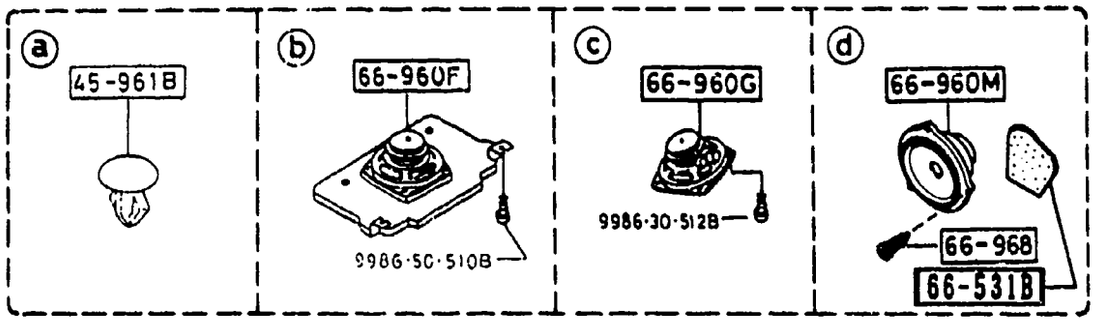

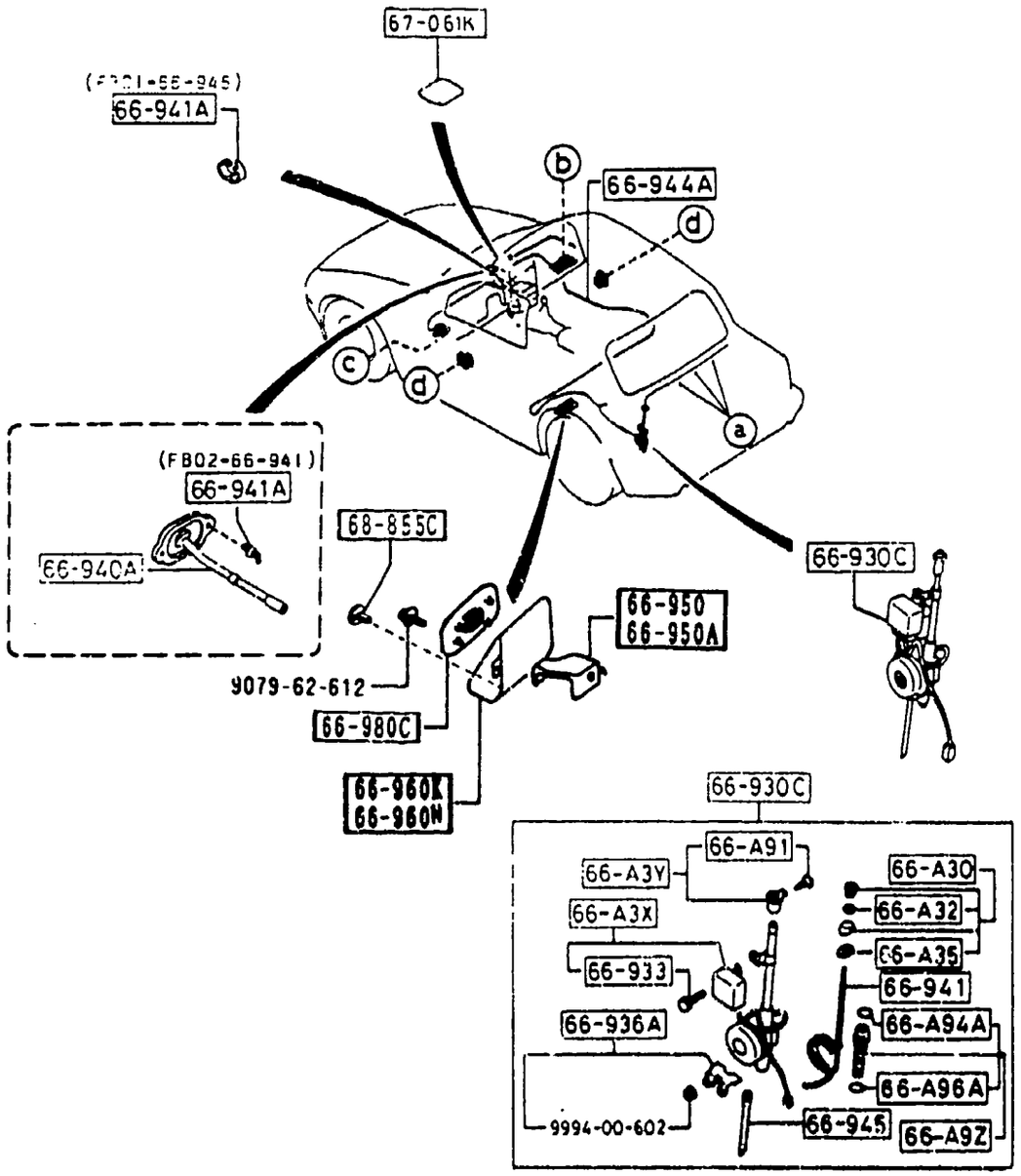

PART NO.	QTY	MODEL/RESTRICTION	MODEL/RESTRICTION	MODEL/RESTRICTION	FROM-TO
66-940A		FEEDER & COVER			
FB02-66-940B	1				
66-941		POLE,ANTENNA			
FB01-66-A90	1				
66-941A		CLIP			
FB02-66-941	2				
FB01-66-945	1				
66-944A		FEEDER,ANTENNA			
FB68-66-940B	1				
66-945		PIPE			
FB01-66-A9Y	1				
66-950		BRACKET(R),SPEAKER			
FC66-66-9BX	1	(W/AIR BAG)			
66-950A		BRACKET(L),SPEAKER			
FC67-66-9BX	1	(W/AIR BAG)			
66-960F		SPEAKER(R),LOUD-FRT			
FC06-66-960	1	(W/O AIR BAG)			
66-960G		SPEAKER(L),LOUD-FRONT			
FC04-66-960	1	(W/O AIR BAG)			
66-960K		SPEAKER(R),LOUD-RR			
*FC66-66-960A	1	(W/AIR BAG)			
66-960M		SPEAKER,DOOR			
FC08-66-960	2	(W/O AIR BAG)			
FC33-66-960	2	(W/AIR BAG)			
66-960N		SPEAKER(L),REAR			
*FC67-66-960A	1	(W/AIR BAG)			
66-968		SCREW,LOUD SPEAKER-DOOR			
FC02-66-968	6				

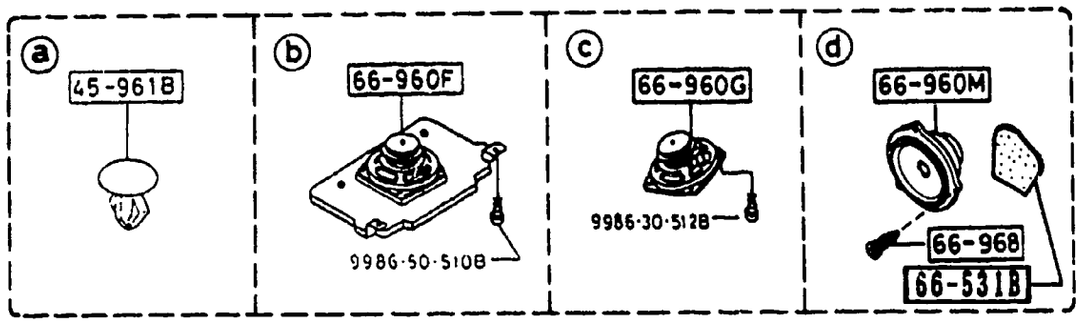

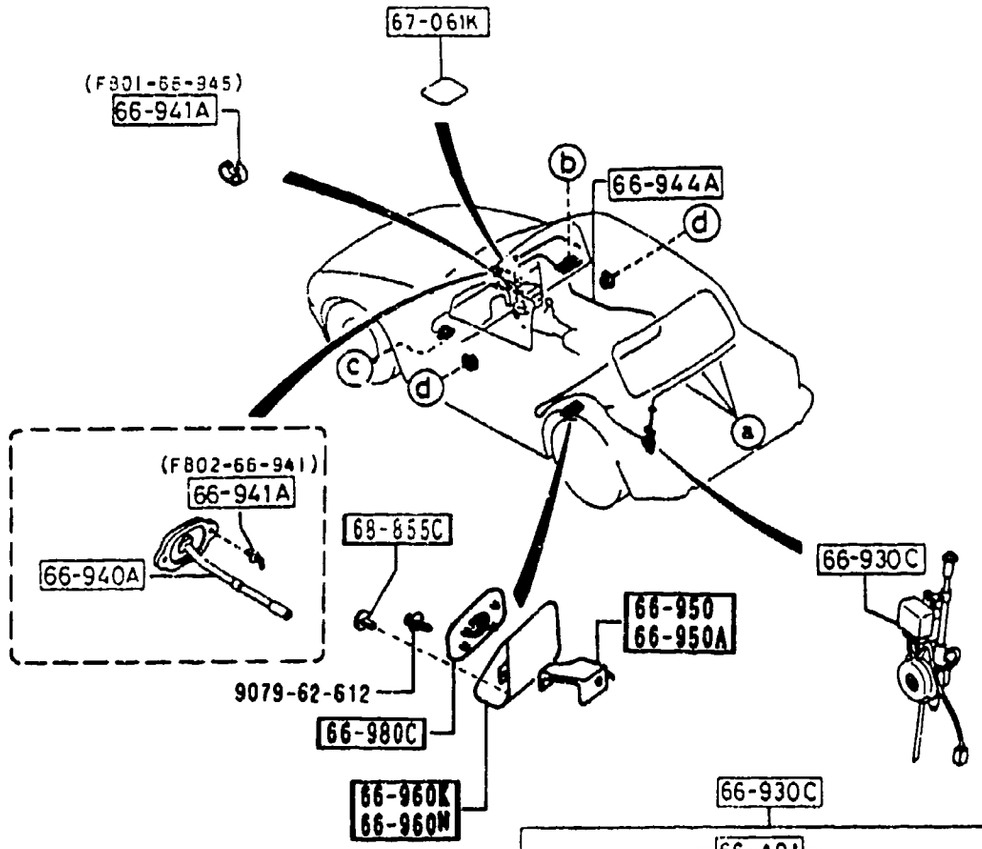

6682 A-3 * AUDIO SYSTEMS (ANTENNA & SPEAKER)
(CONVERTIBLE)

PART NO.	QTY	MODEL/RESTRICTION	MODEL/RESTRICTION	MODEL/RESTRICTION	FROM-TO
66-980C		GRILLE,SPEAKER			
*FC66-66-980A	2	(W/AIR BAG)			
* 02		FD8 BLACK			
* 48		FD9 BLUE			
67-061K		PAD,PROTECTOR			
G001-67-061	1				
68-855C		FASTENER			
*G043-68-865B	2	(W/AIR BAG)			
* 00		FE0 FE1 FD8 BLACK			
* 48		FD9 BLUE			

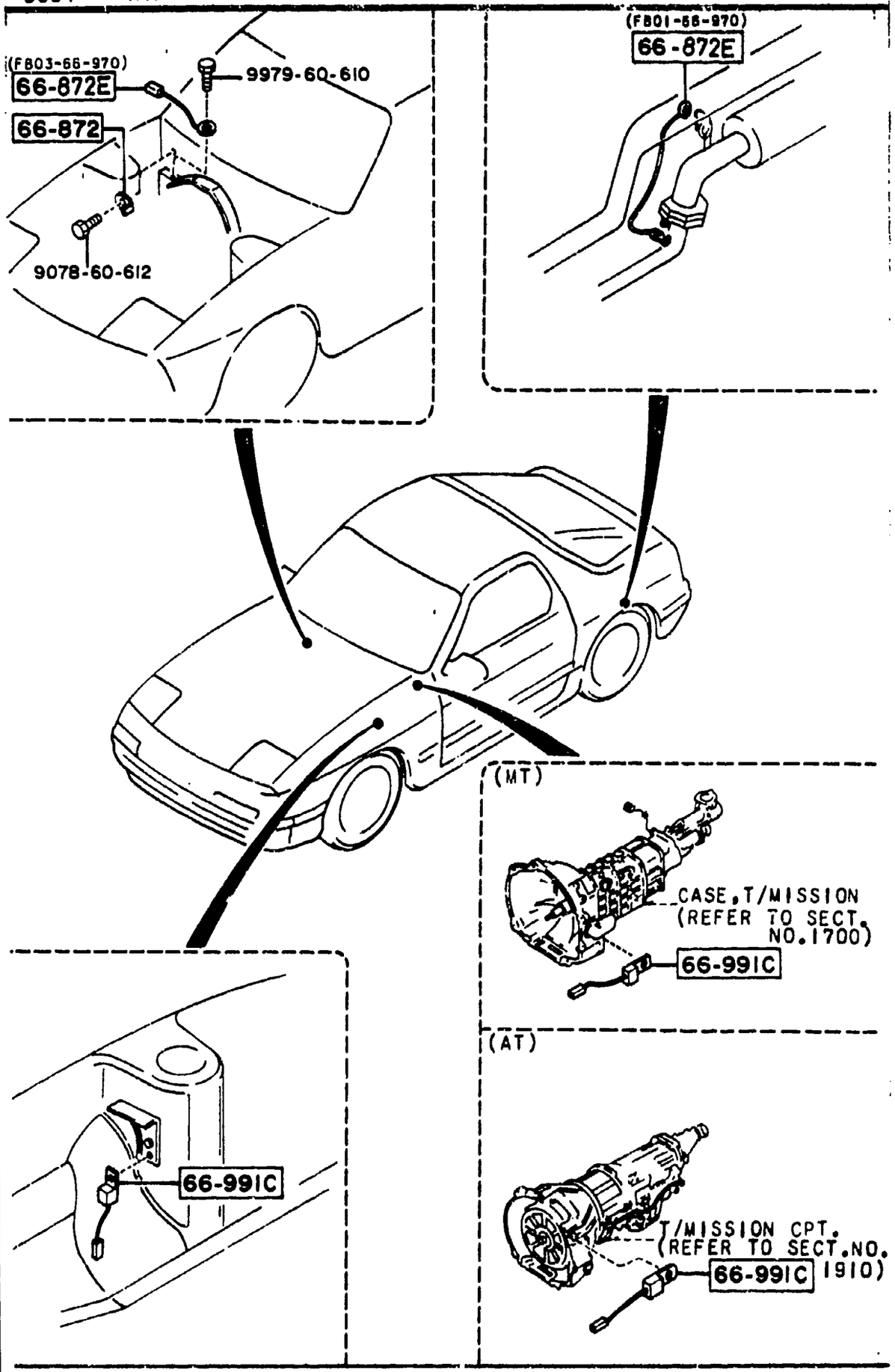

AUFA02

PART NO.	QTY	MODEL/RESTRICTION	MODEL/RESTRICTION	MODEL/RESTRICTION	FROM-TO
66-872		TAB,EARTH			
FB01-66-994A	1				
66-872E		CORD,EARTH			
FB01-66-970	1	T/M CASE - DASH.			
FB03-66-970	1	EX.PIPE - BODY			
66-991C		CONDENSER			
FB01-66-991B	2				

CAT. AUFA02-05

1992-05

(THIS ILLUSTRATION CONSISTS OF 2 PAGES)

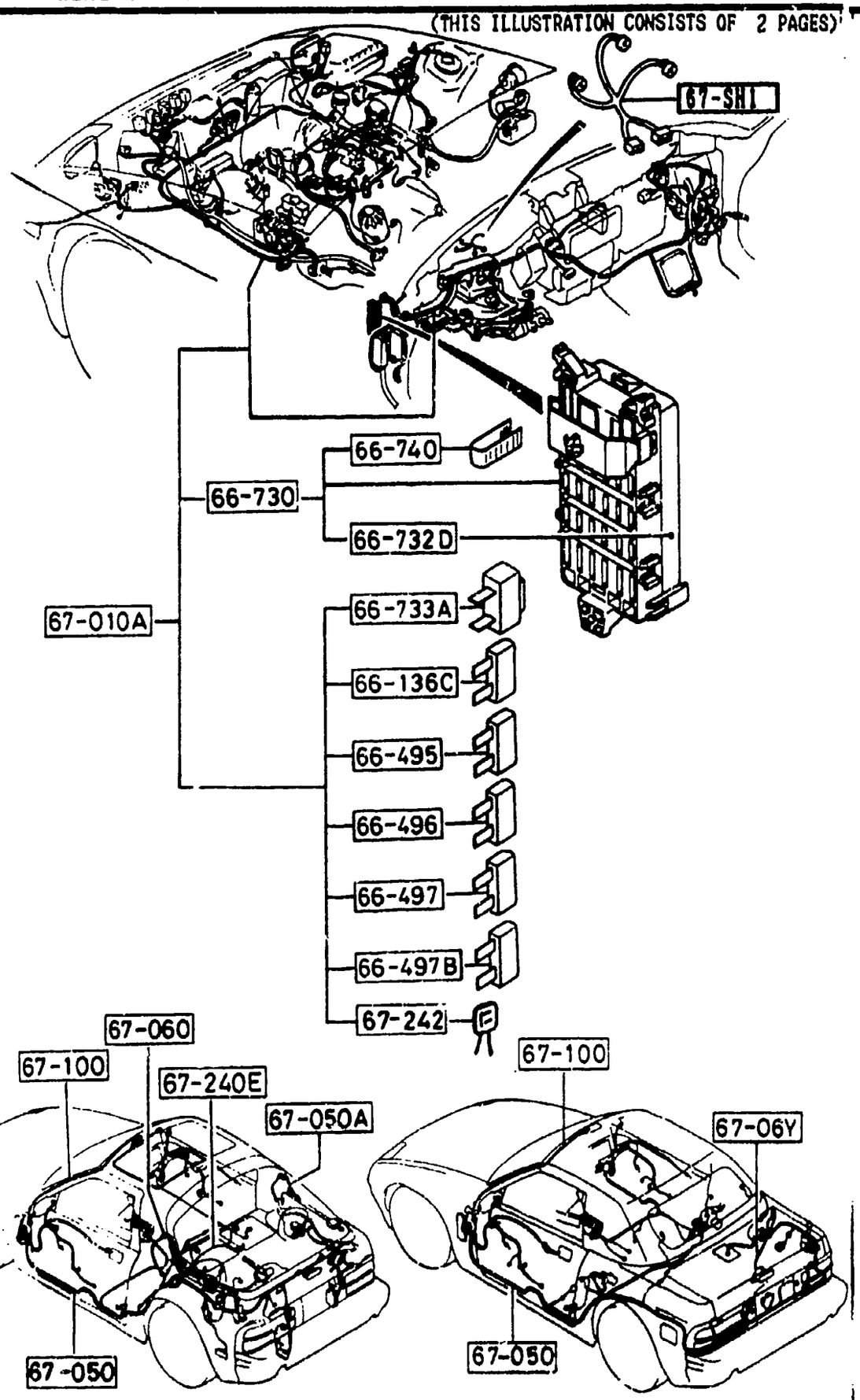

(CONT'D)

(THIS ILLUSTRATION CONSISTS OF 2 PAGES)

BODY	T/MISSON	A.A SUSP	DIFF	A LOCK BRAKE	AIR BAG	PARTS NUMBER
COPE	MT	—	NOR	※	※	FC01-67-010
			LS	—	※	FC02-67-010
				×	※	FC18-67-010
		×	※	※	※	FC04-67-010
	AT	—	※	※	※	FC07-67-010
		×	※	※	※	FC09-67-010
CONVERTBLE	MT	※	※	※	—	FC33-67-010
		※	※	※	×	FC66-67-010
	AT	※	※	※	—	FC47-67-010
		※	※	※	×	FC67-67-010

(THIS ILLUSTRATION CONSISTS OF 2 PAGES)

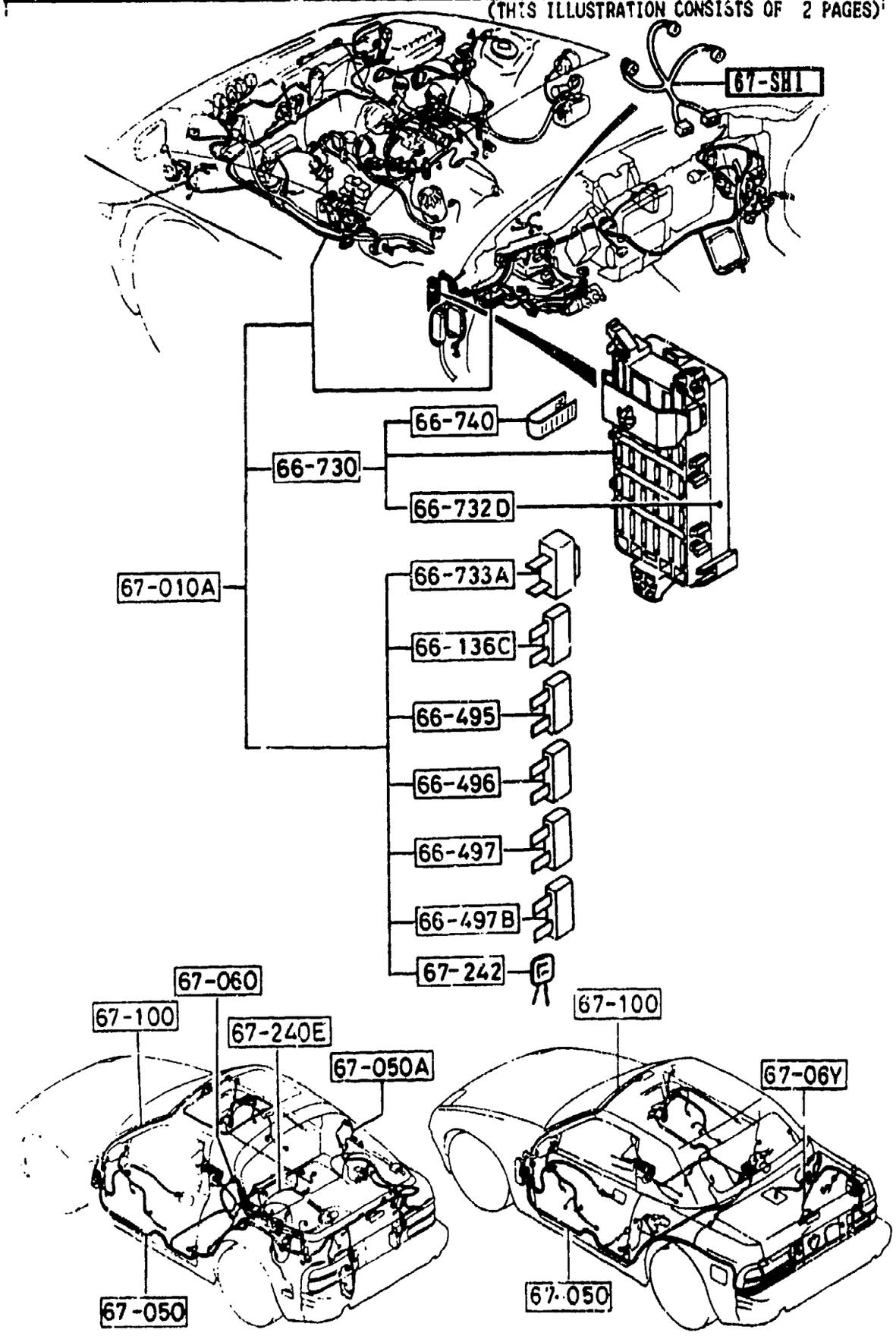

(CONT'D)

AUFA02

PART NO.	QTY	MODEL/RESTRICTION	MODEL/RESTRICTION	MODEL/RESTRICTION	FROM-TO
66-136C		FUSE(7.5A)			
99705-1107	1				
66-495		FUSE(10A)			
99705-1110	7				
66-496		FUSE(15A)			
99705-1115	9				
66-497		FUSE(20A)			
99705-1120	3				
66-497B		FUSE(30A)			
99705-1130	2				
66-730		BLOCK,FUSE			
FC01-66-730	1	(W/O AIR BAG)			
FC66-66-730A	1	(W/AIR BAG)			
66-732D		COVER,FUSE BLOCK			
FC01-66-731	1	FURUKAWA (W/O AIR BAG)			
FC66-66-731	1	(W/AIR BAG)			
66-733A		BREAKER			
H001-66-733	2				
66-740		HOLDER,FUSE			
H001-66-739	1				
67-SH1		CORD,SHORT			
FC01-67-SH0C A (FC01-67-SH0D)	1				-9501
FC07-67-SH0C A (FC07-67-SH0D)	1				-9501
FC01-67-SH0D	1	(MT)			9501-
FC07-67-SH0D	1	(AT)			9501-
67-010A		HARNESS,FRONT			
FC01-67-010C	1	(REFER TO THE CHART IN THE ILLUSTRATION)			-9501

9501 FC3MMM-707092

(THIS ILLUSTRATION CONSISTS OF 2 PAGES)

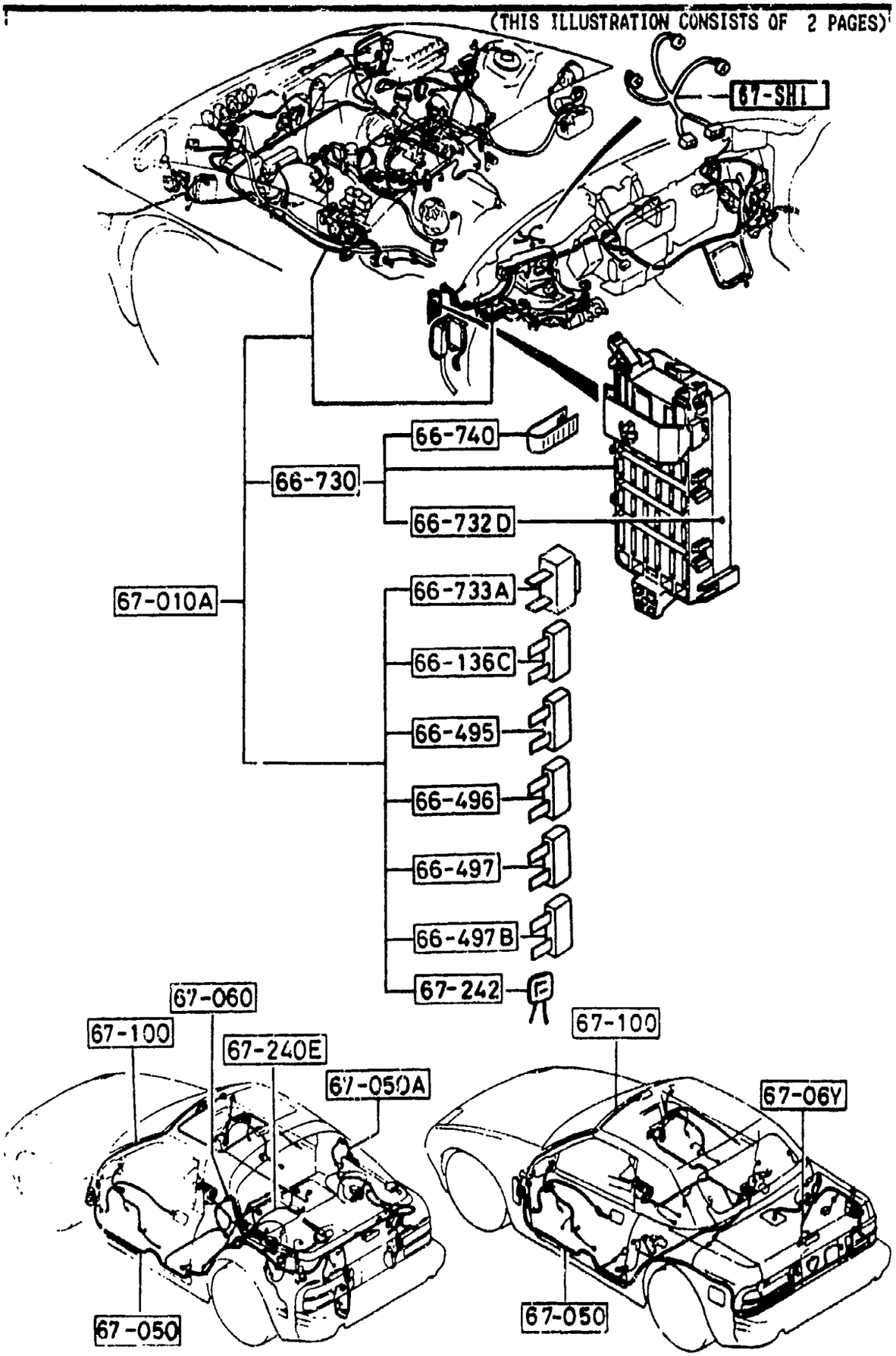

(CONT'D)

AUFA02

PART NO.	QTY	MODEL/RESTRICTION	MODEL/RESTRICTION	MODEL/RESTRICTION	FROM-TO
CONT'D FC02-67-010C	1	(REFER TO THE CHART IN THE ILLUSTRATION)			-9501
FC04-67-010C	1	(REFER TO THE CHART IN THE ILLUSTRATION)			-9501
FC07-67-010C	1	(REFER TO THE CHART IN THE ILLUSTRATION)			-9501
FC09-67-010C	1	(REFER TO THE CHART IN THE ILLUSTRATION)			-9501
FC18-67-010C	1	(REFER TO THE CHART IN THE ILLUSTRATION)			-9501
FC33-67-010C	1	(REFER TO THE CHART IN THE ILLUSTRATION)			-9501
FC47-67-010C	1	(REFER TO THE CHART IN THE ILLUSTRATION)			-9501
FC66-67-010D AN(FC66-67-010E)	1				-9C01
FC67-67-010D AN(FC67-67-010E)	1				-9C01
FC04-67-010D	1	(REFER TO THE CHART IN THE ILLUSTRATION)			9501-9701
FC09-67-010D	1	(REFER TO THE CHART IN THE ILLUSTRATION)			9501-9701
FC33-67-010D	1	(REFER TO THE CHART IN THE ILLUSTRATION)			9501-9701
FC47-67-010D	1	(REFER TO THE CHART IN THE ILLUSTRATION)			9501-9701
FC01-67-010D A (FC01-67-010E)	1				9501-9901
FC02-67-010D A (FC02-67-010E)	1				9501-9901
FC07-67-010D A (FC07-67-010E)	1				9501-9901
FC18-67-010D A (FC18-67-010E)	1				9501-9901
FC04-67-010E A (FC04-67-010F)	1				9701-9901
FC09-67-010E A (FC09-67-010F)	1				9701-9901

9501 FC3####-707092
9701 FC3####-709151
9901 FC3####-802200
9C01 FC3####-804800

CAT. AUFA02-06

1992-05

(THIS ILLUSTRATION CONSISTS OF 2 PAGES)

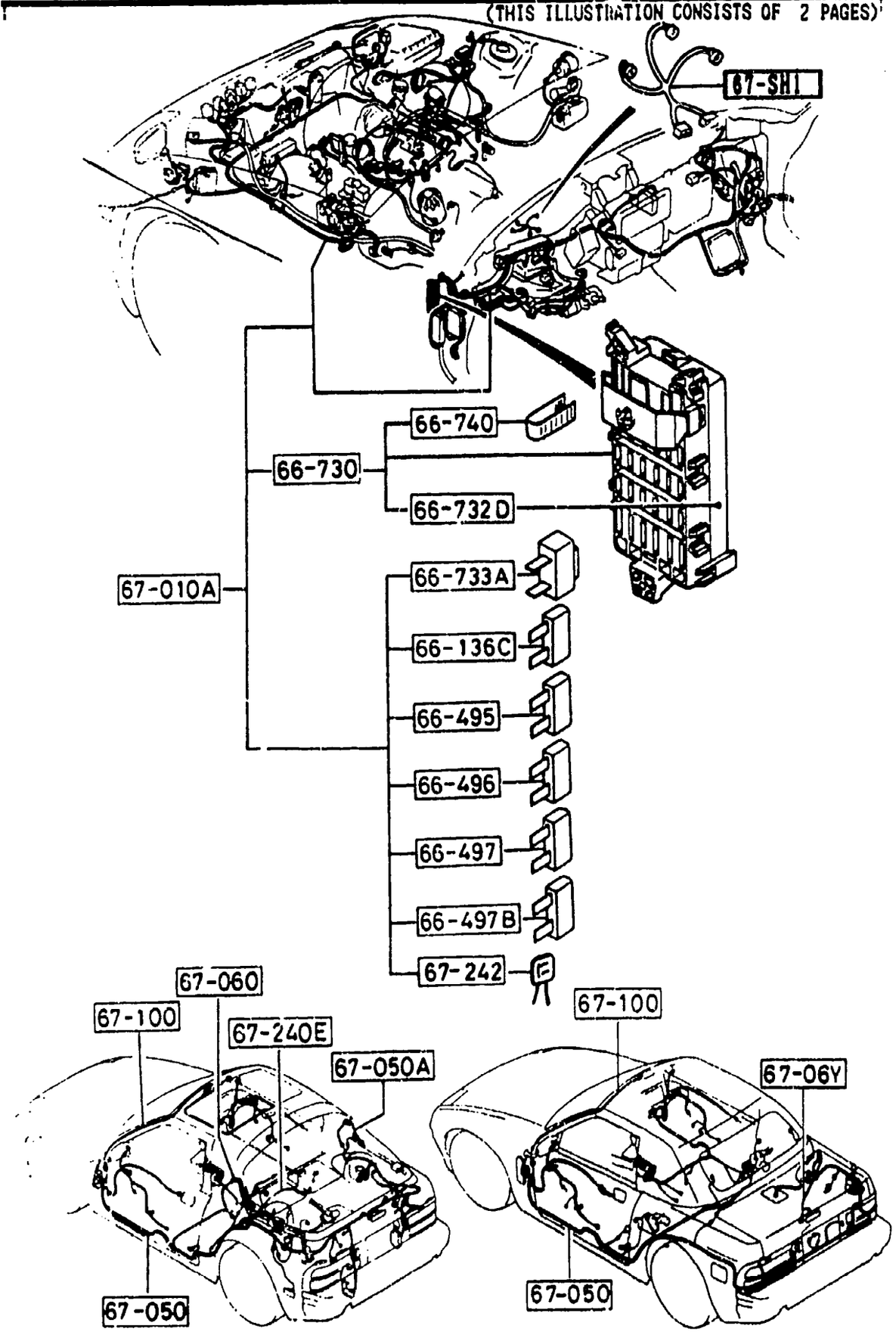

(CONT'D)

AUFA02

PART NO.	QTY	MODEL/RESTRICTION	MODEL/RESTRICTION	MODEL/RESTRICTION	FROM-TO
CONT'D					
FC33-67-010E A (FC33-67-010F)	1				9701-9901
FC47-67-010E A (FC47-67-010F)	1				9701-9901
FC01-67-010E AN(FC01-67-010F)	1				9901-9B01
FC02-67-010E AN(FC02-67-010F)	1				9901-9B01
FC04-67-010F AN(FC04-67-010G)	1				9901-9B01
FC07-67-010E AN(FC07-67-010F)	1				9901-9B01
FC09-67-010F AN(FC09-67-010G)	1				9901-9B01
FC18-67-010E AN(FC18-67-010F)	1				9901-9B01
FC33-67-010F AN(FC33-67-010G)	1				9901-9B01
FC47-67-010F AN(FC47-67-010G)	1				9901-9B01
FC01-67-010F	1	(REFER TO THE CHART IN THE ILLUSTRATION)			9B01-
FC02-67-010F	1	(REFER TO THE CHART IN THE ILLUSTRATION)			9B01-
FC04-67-010G	1	(REFER TO THE CHART IN THE ILLUSTRATION)			9B01-
FC07-67-010F	1	(REFER TO THE CHART IN THE ILLUSTRATION)			9B01-
FC09-67-010G	1	(REFER TO THE CHART IN THE ILLUSTRATION)			9B01-
FC18-67-010F	1	(REFER TO THE CHART IN THE ILLUSTRATION)			9B01-
FC33-67-010G	1	(REFER TO THE CHART IN THE ILLUSTRATION)			9B01-
FC47-67-010G	1	(REFER TO THE CHART IN THE ILLUSTRATION)			9B01-
FC66-67-010E	1	(REFER TO THE CHART IN THE ILLUSTRATION)			9C01-
FC67-67-010E	1	(REFER TO THE CHART IN THE ILLUSTRATION)			9C01-

9701 FC3####-709151
9901 FC3####-802200
9B01 FC3####-804224
9C01 FC3####-804800

CAT. AUFA02-06

1992-05

(THIS ILLUSTRATION CONSISTS OF 2 PAGES)

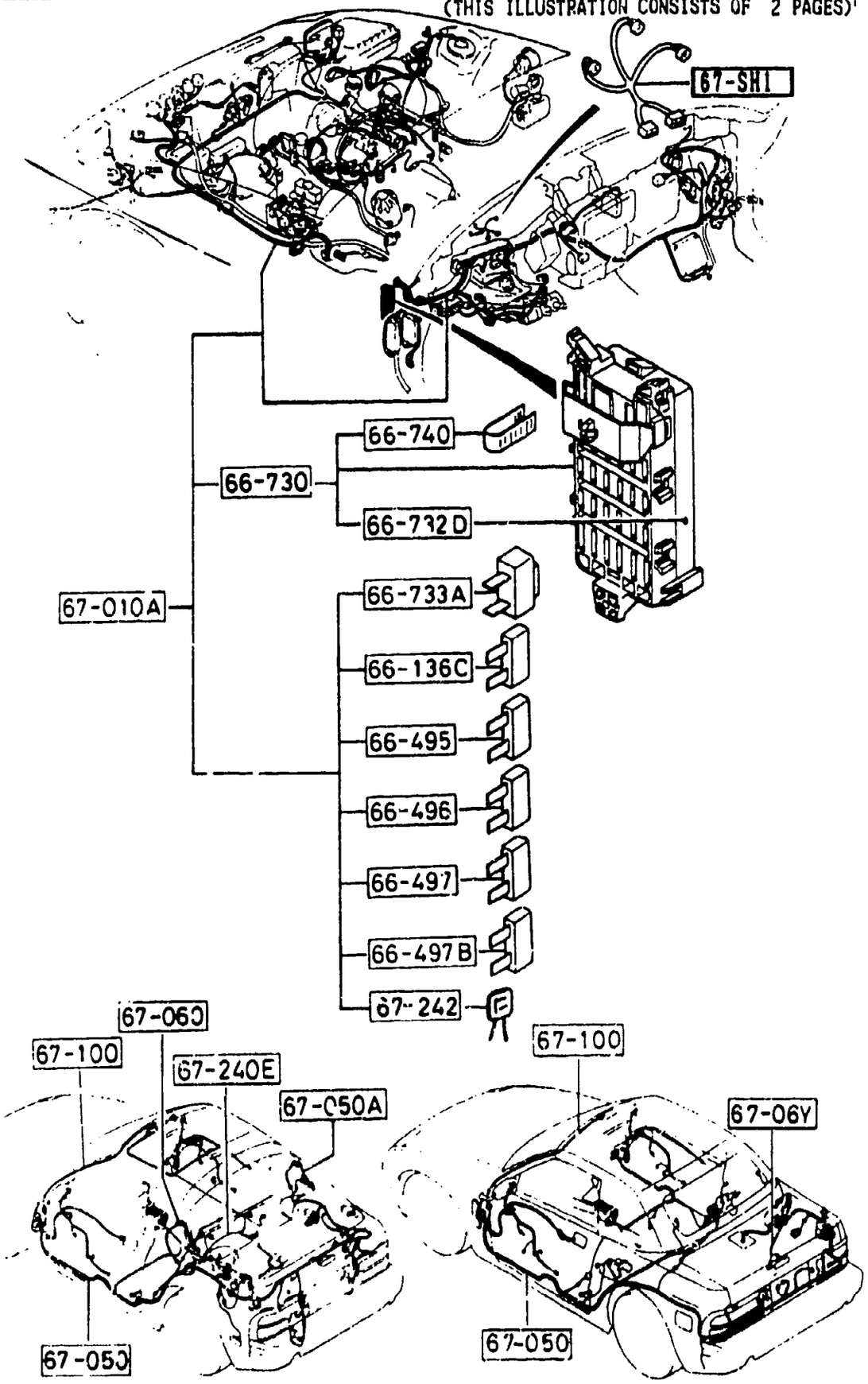

(CONT'D)

PART NO.	QTY	MODEL/RESTRICTION	MODEL/RESTRICTION	MODEL/RESTRICTION	FROM-TO
CONT'D					
+---------+					
| 67-050 |		HARNESS,REAR			
+---------+					
FC66-67-050B	1	((CONVERTIBLE))(W/AIR BAG))			
FC01-67-050D A (FC01-67-050F)	1				-9501
FC04-67-050D A (FC04-67-050F)	1				-9501
FC18-67-050D A (FC18-67-050F)	1				-9501
FC33-67-050D A (FC33-67-050E)	1				-9501
FC01-67-050F	1	((CPE))(W/O A.A.SUSP))(W/O A.LOCK BRAKE))			9501-
FC04-67-050F	1	((CPE))(A.A.SUSP))			9501-
FC18-67-050F	1	((CPE))(W/O A.A.SUSP))(A.LOCK BRAKE))			9501-
FC33-67-050E	1	((CONVERTIBLE))(W/O AIR BAG))			9501-
+---------+					
| 67-050A |		HARNESS NO.1,REAR			
+---------+					
FB02-67-060B	1	(CPE)			
+---------+					
| 67-06Y |		HARNESS NO.3,REAR			
+---------+					
FC55-67-06YA A (FC55-67-06YB)	1				-9324
FC55-67-06YB	1	(CONVERTIBLE)			9324-
+---------+					
| 67-060 |		HARNESS NO.2,REAR			
+---------+					
FB01-67-060B	1	(CPE)			
+---------+					
| 67-100 |		HARNESS,INT.LAMP			
+---------+					
FC01-67-100C	1	((CPE))(W/O SUN-RF))			
FC03-67-100C	1	((CPE))(SUNROOF))			
FC33-67-100	1	(CONVERTIBLE)			
+---------+					
| 67-240E |		WIRING,STORAGE			
+---------+					
FB01-67-240A	1	GTU, GTUS, GXL, TURBO, (W/STORAGE BOX) (CPE)			

9324 FC3###-705162
9501 FC3###-707092

(THIS ILLUSTRATION CONSISTS OF 2 PAGES)

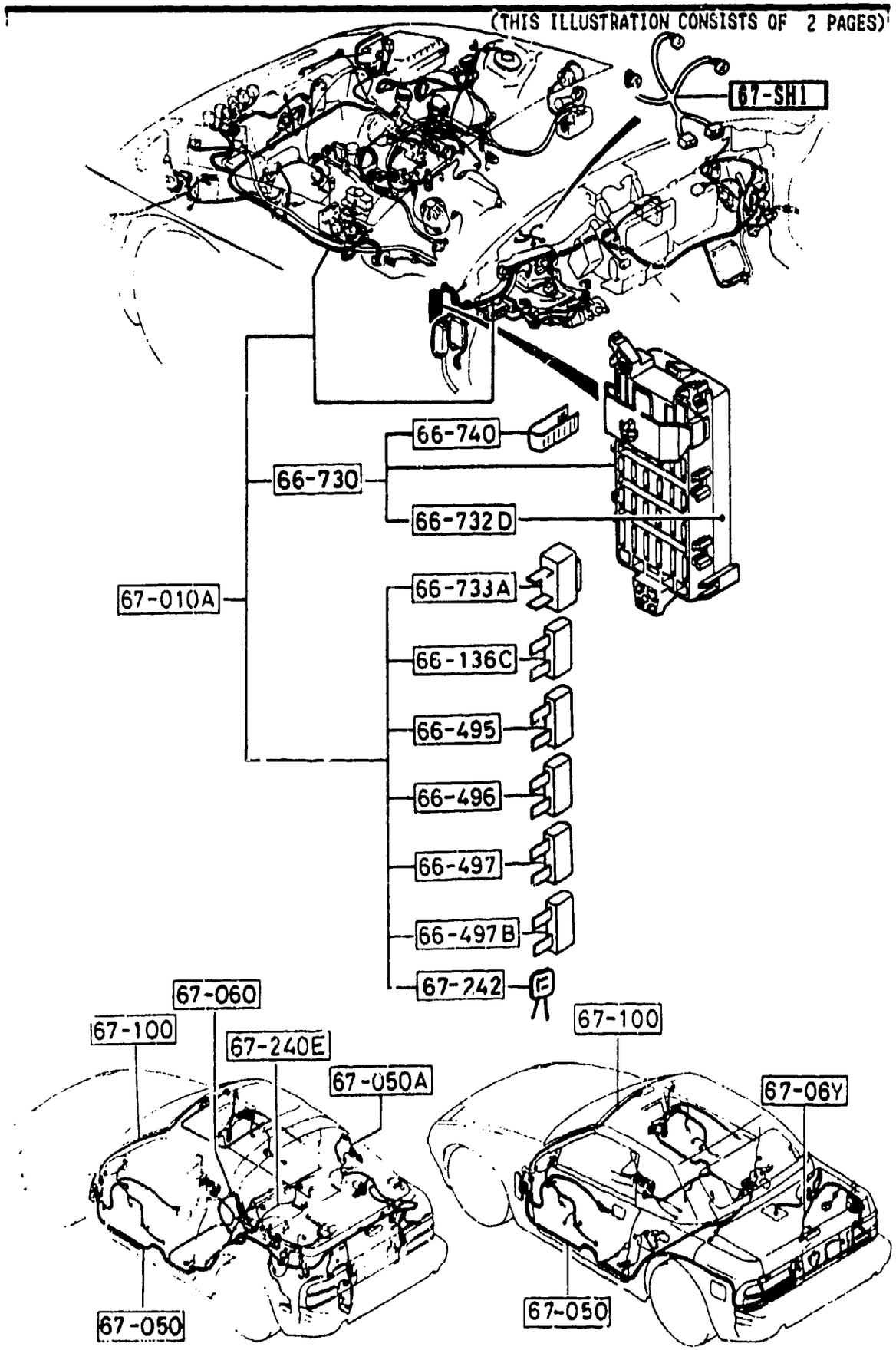

PART NO.	QTY	MODEL/RESTRICTION	MODEL/RESTRICTION	MODEL/RESTRICTION	FROM-TO
67-242		RECTIFIER			
8871-67-242	1	(W/O RUNNING LAMP) (CONVERTIBLE)			

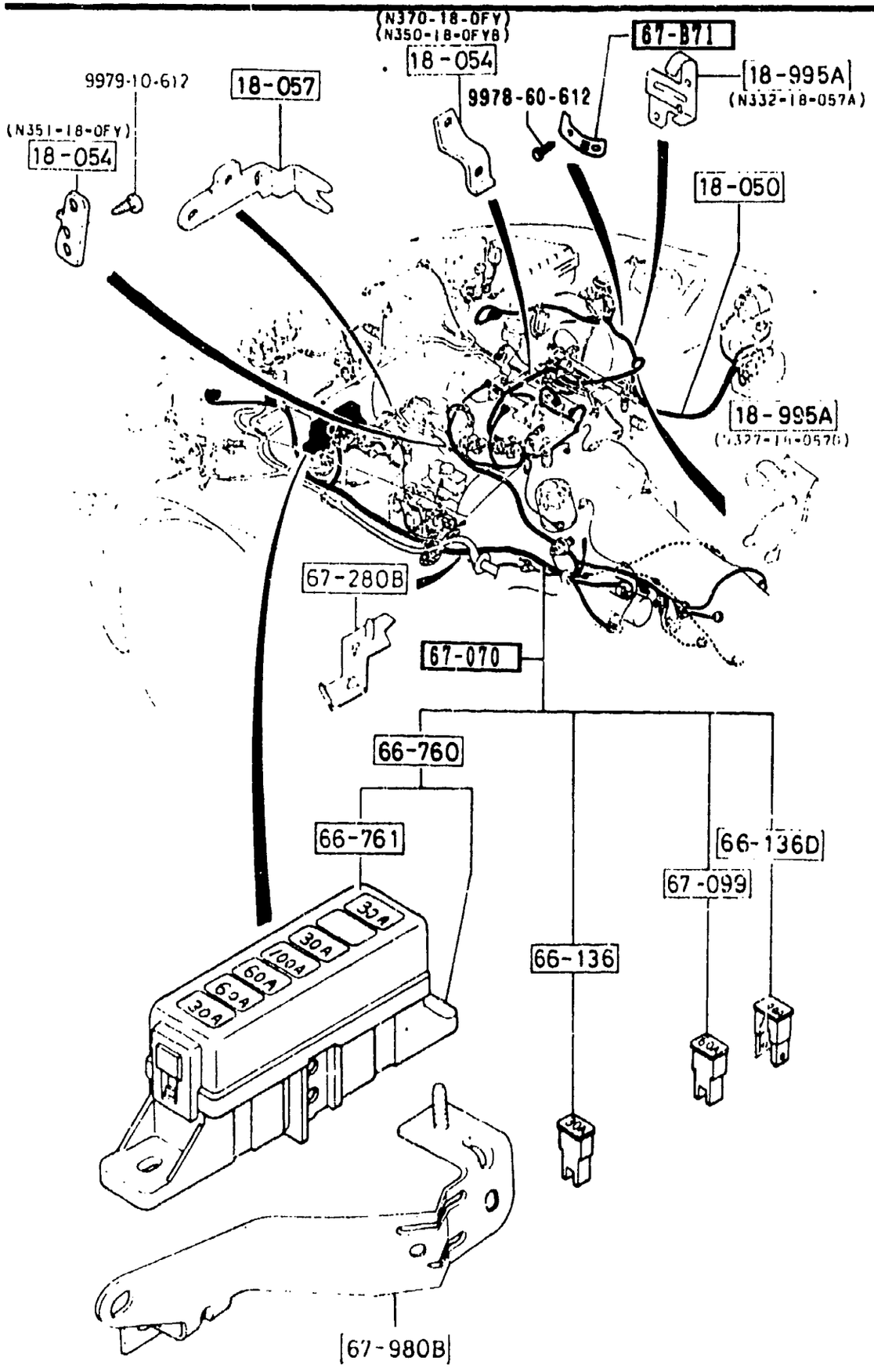

PART NO.	QTY	MODEL/RESTRICTION	MODEL/RESTRICTION	MODEL/RESTRICTION	FROM-TO
18-050		WIRING,ENGINE			
N350-18-05ZB AN(N350-18-05ZC)	1				-9701
N370-18-05ZB AN(N370-18-05ZD)	1				-9701
N387-18-05ZB A (N387-18-05ZC)	1				-9C01
N370-18-05ZD	1	(TURBO)			9701-
N350-18-05ZC A (N350-18-05ZD)	1				9701-9C01
N350-18-05ZD	1	((W/O TURBO)>(W/O AIR BAG))			9C01-
N387-18-05ZC	1	((W/O TURBO)>(W/AIR BAG))			9C01-
18-054		BRACKET,HOLE-ENG.WIRING			
N351-18-0FY	1	((W/O TURBO)>(W/AIR BAG))			
N370-18-0FY	1	(TURBO)			
N350-18-0FYA AN(N350-18-0FYB)	1				-9601
N350-18-0FYB	1	((W/O TURBO)>(W/O AIR BAG))			9601-
18-057		BRACKET,CLIP-ENG.WIRING			
N350-18-057	1				
18-995A		BRACKET,CLIP			
N332-18-057A	1	(TURBO)			
N327-18-057C	1				-9914
N327-18-057D	1				9914-
66-136		FUSE(30A,			
H115-67-099	3	(W/O AIR BAG)			
	4	(W/AIR BAG)			
66-136D		FUSE(100A)			
FC01-67-099	1				
66-760		BLOCK,MAIN FUSE			
FC01-66-760	1	(W/O AIR BAG)			
FC66-66-760A	1	(W/AIR BAG)			

9601 FC3###-708021
9701 FC3###-709151
9914 FC3###-802776
9C01 FC3###-804800

LO.NO	SEC.NO	SECTION NAME
4-C03	6100	HEATER
4-E03	6110	HEATER UNIT COMPONENTS
4-F03	6115	HEATER CONTROLS COMPONENTS
4-G03	6120	HEATER BLOWER COMPONENTS
4-I03	6130	AIR CONDITIONER
4-J03	6230	LIFT GATE MECHANISMS (COUPE)
4-M03	6300	WINDOW GLASSES (COUPE)
4-N03	6300A	WINDOW GLASSES (CONVERTIBLE)
4-C04	6330	SUNROOF (COUPE)
4-G04	6330A	SUNROOF (CONVERTIBLE)
4-M04	6600	SWITCHES & RELAYS (ENGINE)
4-G05	6610	DASHBOARD SWITCHES
4-H05	6611	COMBINATION SWITCH
4-I05	6612	CLUSTER SWITCH
4-L05	6615	POWER WINDOW SWITCHES
4-M05	6630	RELAYS & UNIT (BODY)
4-D06	6635	DOOR SWITCH & HORNS
4-E06	6640	AUTO CRUISE CONTROL SYSTEM
4-F06	6680	AUDIO SYSTEMS (RADIO & TAPE DECK) (COUPE)
4-K06	6680 A	AUDIO SYSTEMS (RADIO & TAPE DECK) (CONVERTIBLE)
4-M06	6682	AUDIO SYSTEMS (ANTENNA & SPEAKER) (COUPE)
4-D07	6682 A	AUDIO SYSTEMS (ANTENNA & SPEAKER) (CONVERTIBLE)
4-G07	6684	AUDIO SYSTEMS(NOISE SUPPRESSOR & EARTH CORD)
4-H07	6700	WIRING HARNESSES(FRONT & REAR)
4-N07	6701	WIRING HARNESSES(ENGINE & T/MISSION)
4-D08	6702	WIRING HARNESSES(DASHBOARD)
4-E08	6703	WIRING HARNESSES(DOOR,FLOOR/CEILING)
4-G08	6704	WIRING HARNESS CLAMPS
4-J08	6720	WINDSHIELD WASHER (1.5L & 2.5L)
4-L08	6720 A	WINDSHIELD WASHER (5.7L)
4-N08	6730	WINDSHIELD WIPERS
4-C09	6740	WIPER MOTOR COMPONENTS(FRONT)
4-D09	6750	WINDOW WIPER & WASHER (REAR)
4-G09	6760	WINDOW WIPER MOTOR COMPONENTS (REAR)
4-H09	6800	CEILING TRIMS (COUPE)
4-J09	6800A	CEILING TRIMS (CONVERTIBLE)
4-K09	6810	ROLLEBAR (CONVERTIBLE)
4-N09	6820	PILLAR TRIMS (COUPE)
4-F10	6820A	PILLAR TRIMS (CONVERTIBLE)
4-G10	6840	TRIMS & SCUFF PLATES (COUPE)
4-L10	6840A	TRIMS & SCUFF PLATES (CONVERTIBLE)
4-N10	6845	STRAGE BOX (COUPE) (GXL,TURBO)
4-D11	6860	FLOOR MATS & PADS (COUPE)
4-K11	6860A	FLOOR MATS & PADS (CONVERTIBLE)
4-C12	6870	SERVICE TOOLS
4-D12	6900	VISORS,ASSIST HANDLES & MIRRORS (COUPE)
4-H12	6900A	VISORS,ASSIST HANDLES & MIRRORS (CONVERTIBLE)
4-K12	6930	CAUTION PLATES & LABELS
4-N12	7250	QUARTER WINDOW & TRIMS
4-E13	7800	SPOILERS & RELATED PARTS
	00	ACCESSORIES

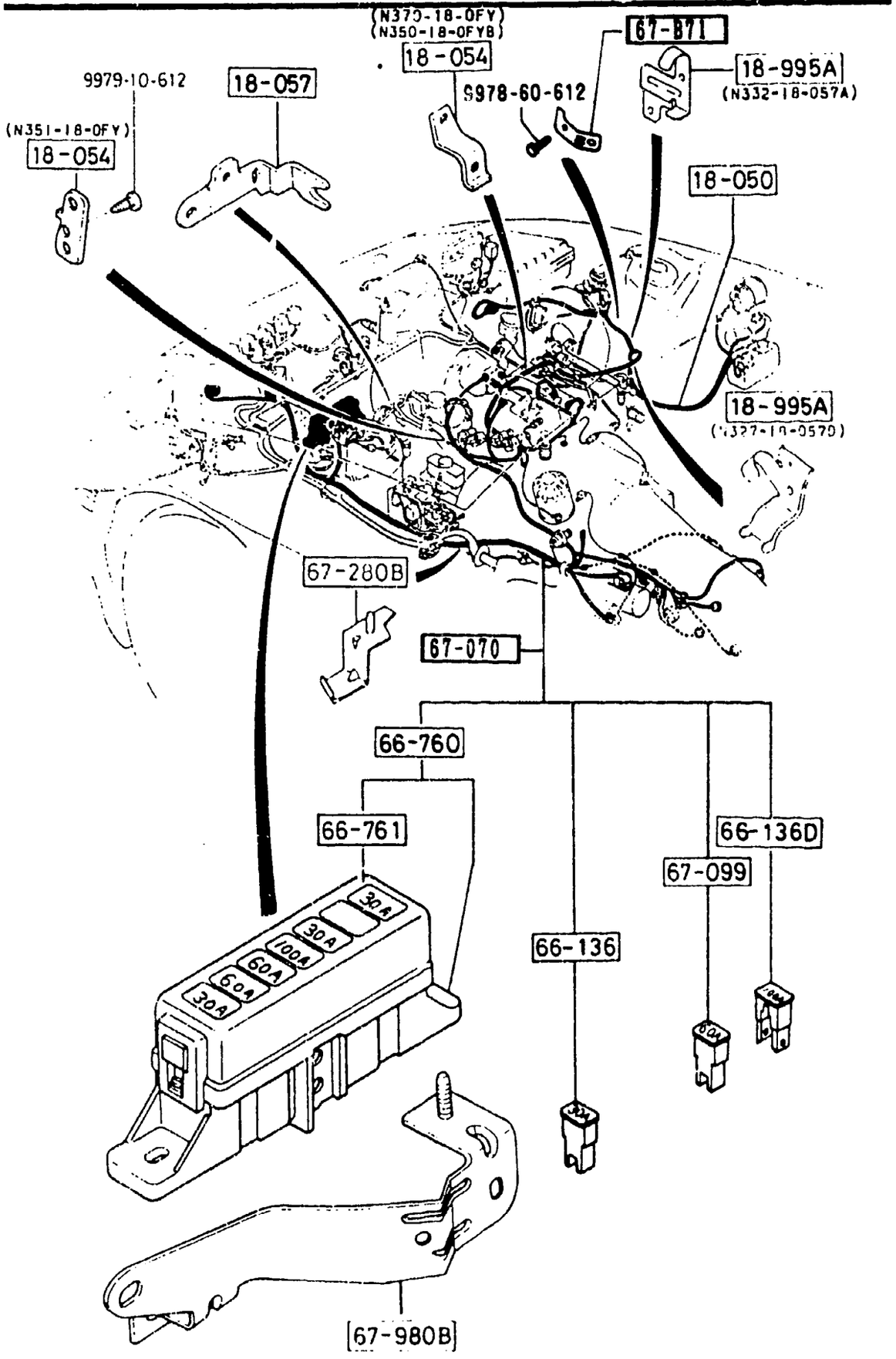

PART NO.	QTY	MODEL/RESTRICTION	MODEL/RESTRICTION	MODEL/RESTRICTION	FROM-TO
66-761		COVER,MAIN FUSE BLOK			
FC01-66-762	1	(W/O AIR BAG)			
FC66-66-762A	1	(W/AIR BAG)			
67-B71		BRACKET,HARNESS			
FC66-67-BW1	1	(W/AIR BAG)			
67-070		HARNESS,ENGINE			
FC66-67-070A	1	((MT)>(W/O A.LOCK BRAKE)>(W/AIR BAG))			
FC67-67-070A	1	((AT)>(W/AIR BAG))			
FC01-67-070CA (FC01-67-070D)	1				-9501
FC07-67-070CA (FC07-67-070D)	1				-9501
FC17-67-070DA (FC17-67-070E)	1				-9501
FC01-67-070DAN(FC01-67-070E)	1				9501-9B01
FC07-67-070DAN(FC07-67-070E)	1				9501-9B01
FC17-67-070EAN(FC17-67-070F)	1				9501-9B01
FC01-67-070E	1	((MT)>(W/O A.LOCK BRAKE)>(W/O AIR BAG))			9B01-
FC07-67-070E	1	((AT)>(W/O AIR BAG))			9B01-
FC17-67-070F	1	((MT)>(A.LOCK BRAKE)>(W/O AIR BAG))			9B01-
67-099		LINK,FUSIBLE			
FB01-67-099	2	60A			
67-280B		BRACKET,BATT. CABLE			
FB01-67-280BA (FB01-67-280C)	1				-9501
FB01-67-280C	1				9501-
67-980B		BRACKET,MAIN FUSE CASE			
FB01-67-980E	1				

9501 FC3***-707092
9B01 FC3***-804224

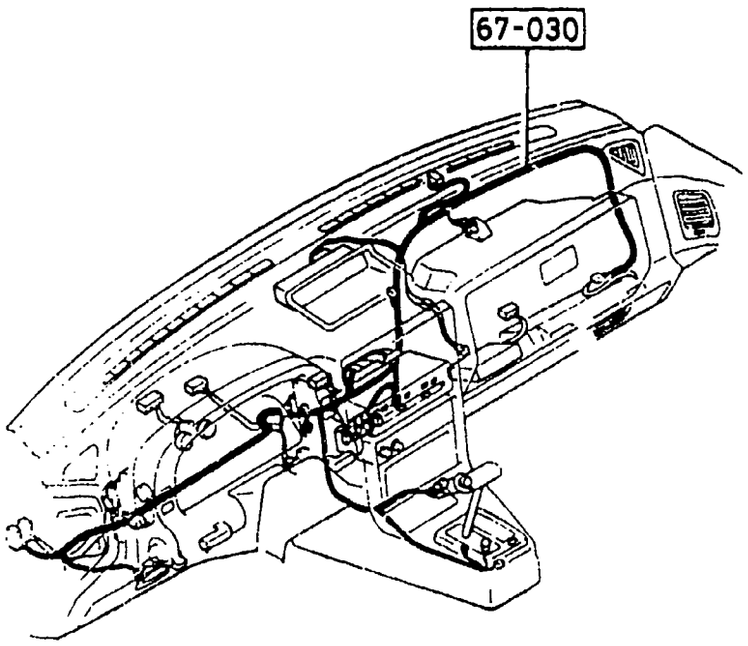

PART NO.	QTY	MODEL/RESTRICTION	MODEL/RESTRICTION	MODEL/RESTRICTION	FROM-TO
67-030		HARNESS, INSTRUMENT			
FC66-67-030B	1	((CONVERTIBLE))(MT))(W/AIR BAG))			
FC67-67-030B	1	((CONVERTIBLE))(AT))(W/AIR BAG))			
FC01-67-030C	1	((CPE))(MT))			-9501
FC07-67-030C	1	((CPE))(AT))			-9501
FC33-67-030D	1	((CONVERTIBLE))(MT))(W/O AIR BAG))			-9501
FC47-67-030C	1	((CONVERTIBLE))(AT))(W/O AIR BAG))			-9501
FC01-67-030D	1	((CPE))(MT))			9501-
FC07-67-030D	1	((CPE))(AT))			9501-
FC33-67-030E	1	((CONVERTIBLE))(MT))(W/O AIR BAG))			9501-
FC47-67-030D	1	((CONVERTIBLE))(AT))(W/O AIR BAG))			9501-

9501 FC3####-707092

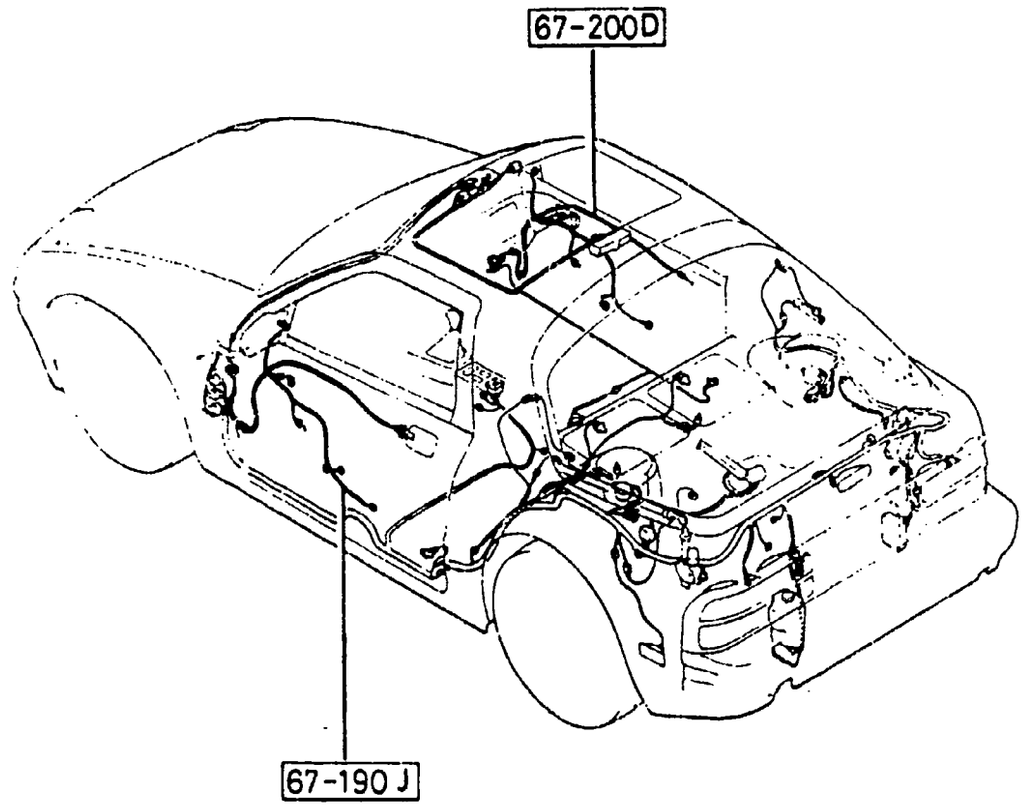

6703 -1 WIRING HARNESSES(DOOR,FLOOR/CEILING)

PART NO.	QTY	MODEL/RESTRICTION	MODEL/RESTRICTION	MODEL/RESTRICTION	FROM-TO
67-190J		HARNESS,DOOR-DRIVER SIDE			
FC01-67-190D AN(FC01-67-190E)	1				-9324
FC02-67-190D AN(FC02-67-190E)	1				-9324
FC04-67-190D AN(FC04-67-190E)	1				-9324
FC33-67-190D AN(FC33-67-190E)	1				-9324
FC01-67-190E AN(FC01-67-190F)	1				9324-9501
FC02-67-190E AN(FC02-67-190F)	1				9324-9501
FC04-67-190E AN(FC04-67-190F)	1				9324-9501
FC33-67-190E AN(FC33-67-190F)	1				9324-9501
FC01-67-190F	1	((CPE))(W/O TURBO))(NOR.DIFF))			9501-
FC02-67-190F	1	((CPE))(L.S.DIFF))			9501-
FC04-67-190F	1	((CPE))(TURBO))			9501-
FC33-67-190F	1	(CONVERTIBLE)			9501-
67-200D		HARNESS,DOOR-PASSENGER SIDE			
FC01-67-200D AN(FC01-67-200E)	1				-9324
FC02-67-200D AN(FC02-67-200E)	1				-9324
FC04-67-200D AN(FC04-67-200E)	1				-9324
FC33-67-200D AN(FC33-67-200E)	1				-9324
FC01-67-200E AN(FC01-67-200F)	1				9324-9501
FC02-67-200E AN(FC02-67-200F)	1				9324-9501
FC04-67-200E AN(FC04-67-200F)	1				9324-9501
FC33-67-200E AN(FC33-67-200F)	1				9324-9501
FC01-67-200F	1	((CPE))(W/O TURBO))(NOR.DIFF))			9501-
FC02-67-200F	1	((CPE))(L.S.DIFF))			9501-
FC04-67-200F	1	((CPE))(TURBO))			9501-

9324 FC3***-705162
9501 FC3***-707092

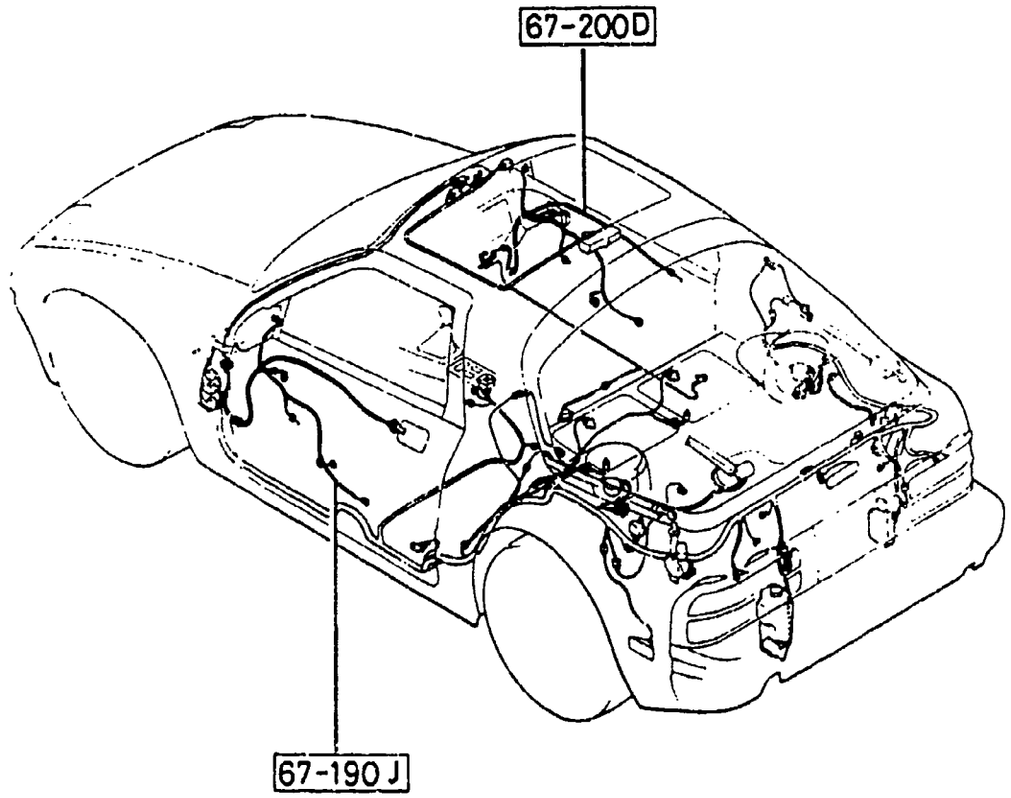

PART NO.	QTY	MODEL/RESTRICTION	MODEL/RESTRICTION	MODEL/RESTRICTION	FROM-TO
CONT'D FC33-67-200F	1	(CONVERTIBLE)			9501-

9501 FC3✱✱✱-707092

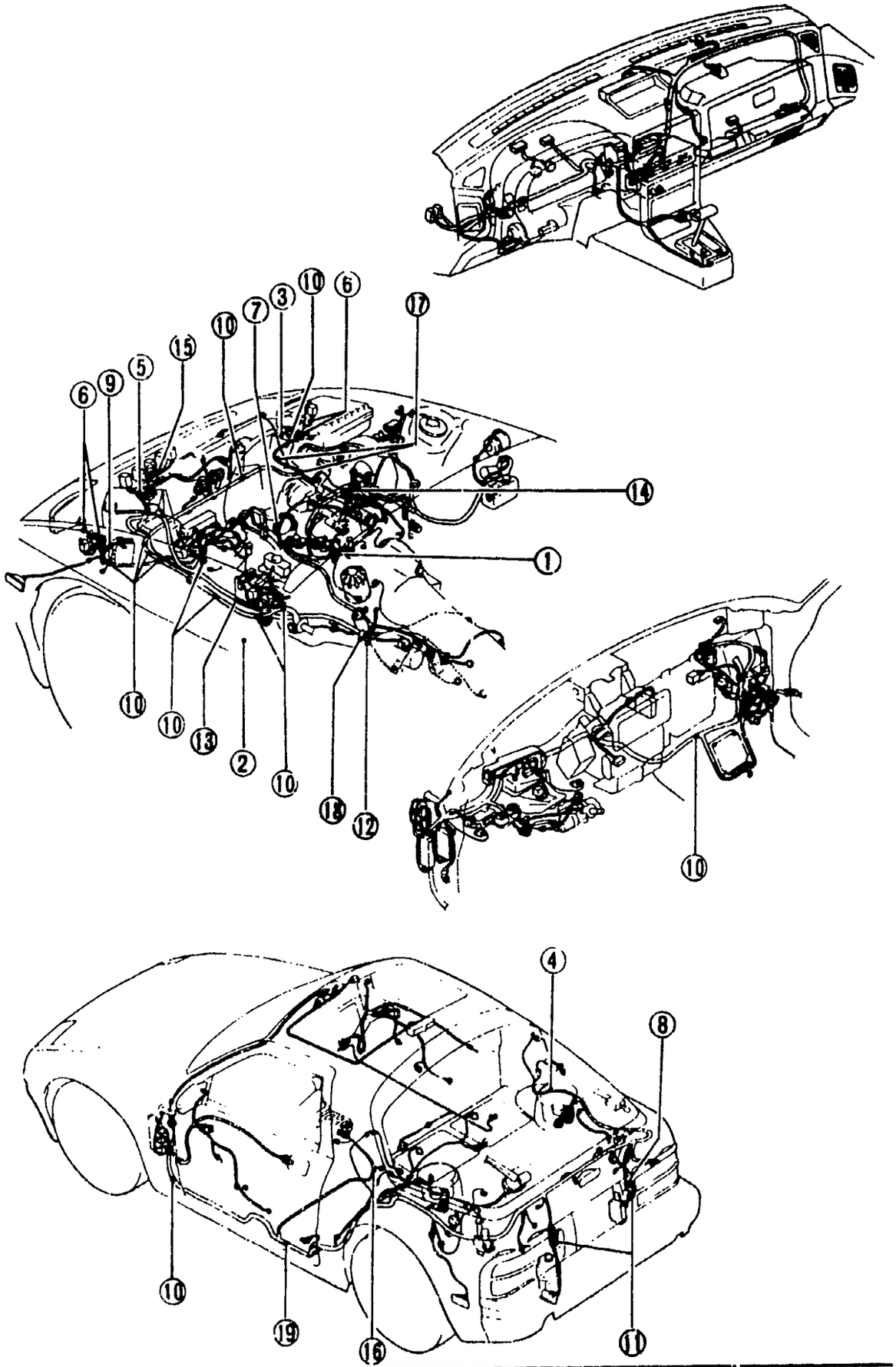

① 18-141E (N319-18-14Y)	② 45-961B	③ 66-941A	④ 66-941C	⑤ 67-012A
⑥ 67-014A	⑦ 67-019	⑧ 67-031B	⑨ 67-051E (UB42-67-051)	⑩ 67-051E (#029-67-051A)
⑪ 67-052J	⑫ 67-072A (FC01-67-072A)	⑬ 67-073	⑭ 67-073B	⑮ 67-254 (S113-67-254A)
⑯ 67-293	① 18-141E (N350-18-14Y)	⑰ 67-254 (FC04-51-674)	⑱ 67-072A (#E03-67-072)	⑲ 20-451

(THIS ILLUSTRATION CONSISTS OF 2 PAGES)

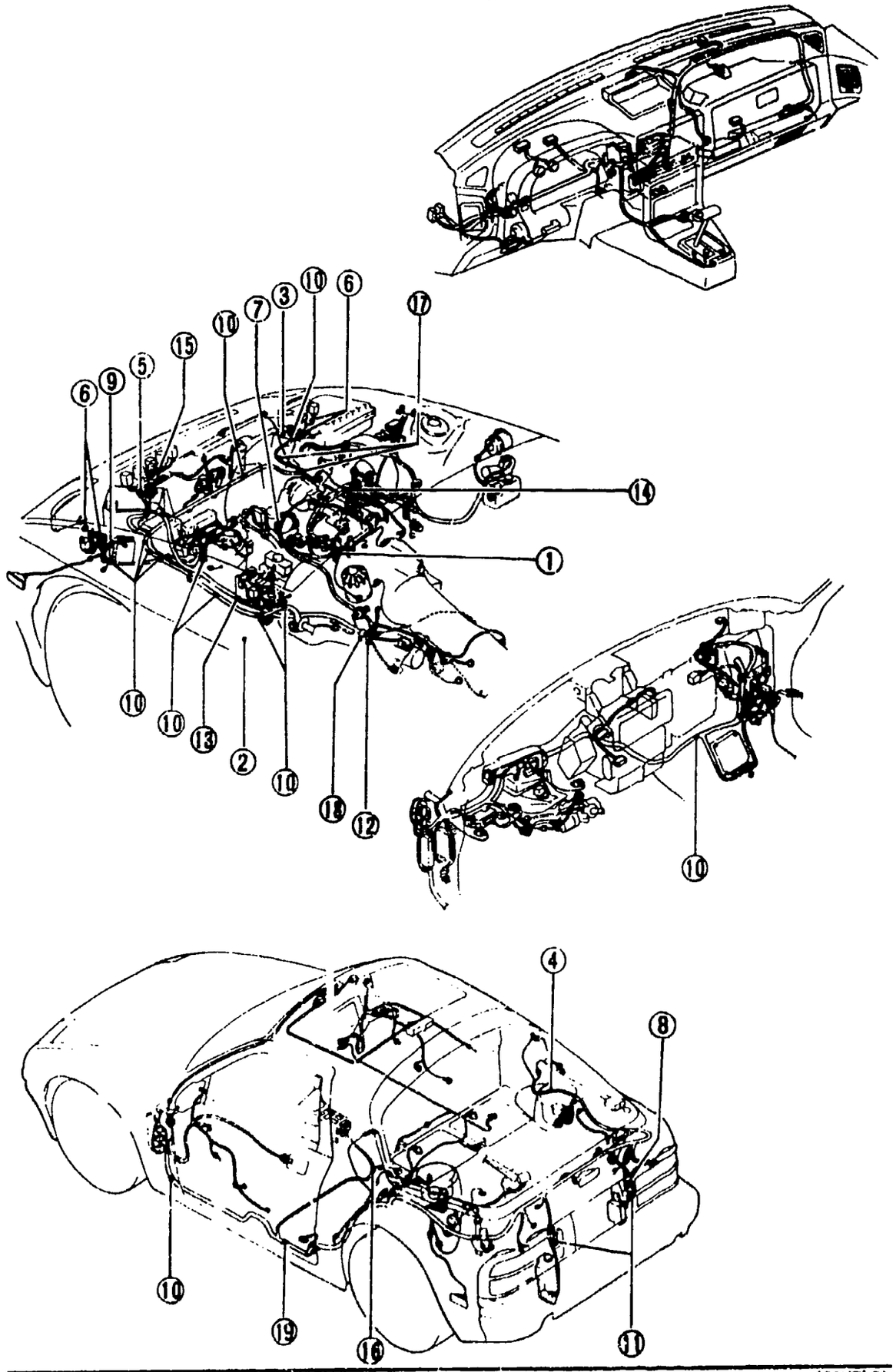

(CONT'D)

PART NO.	QTY	MODEL/RESTRICTION	MODEL/RESTRICTION	MODEL/RESTRICTION	FROM-TO
18-141E		SUPPORTER,CORD			
N319-18-14Y	1	(TURBO)			
N350-18-14Y	1	(W/O TURBO)			
20-451		CLIP			
*B612-20-468	1	(CONVERTIBLE)			
45-961B		CAP			
H002-45-961	1				
66-941A		CLIP			
GB08-66-941	1				
66-941C		CLIP			
UB42-66-971	1	(CPE)			
67-012A		CLIP			
FB01-67-012	1				
67-014A		CLIP			
FD01-67-014	4				
67-019		CLIP			
FB02-67-019A	1				
67-031B		CLIP			
UB42-67-031	1				
67-051E		CLIP			
W029-67-051A	10	(CPE) (CONVERTIBLE)			
UB42-67-051A (S113-67-254A)	1				-9301
W029-67-051A (UB42-67-031)	8	(CPE)			-9301
W029-67-051A	14	(CONVERTIBLE)			9301-
67-052J		CLIP			
B001-67-051	2	(CPE)			
67-072A		CLIP			

9301 FC3####-704194

(THIS ILLUSTRATION CONSISTS OF 2 PAGES)

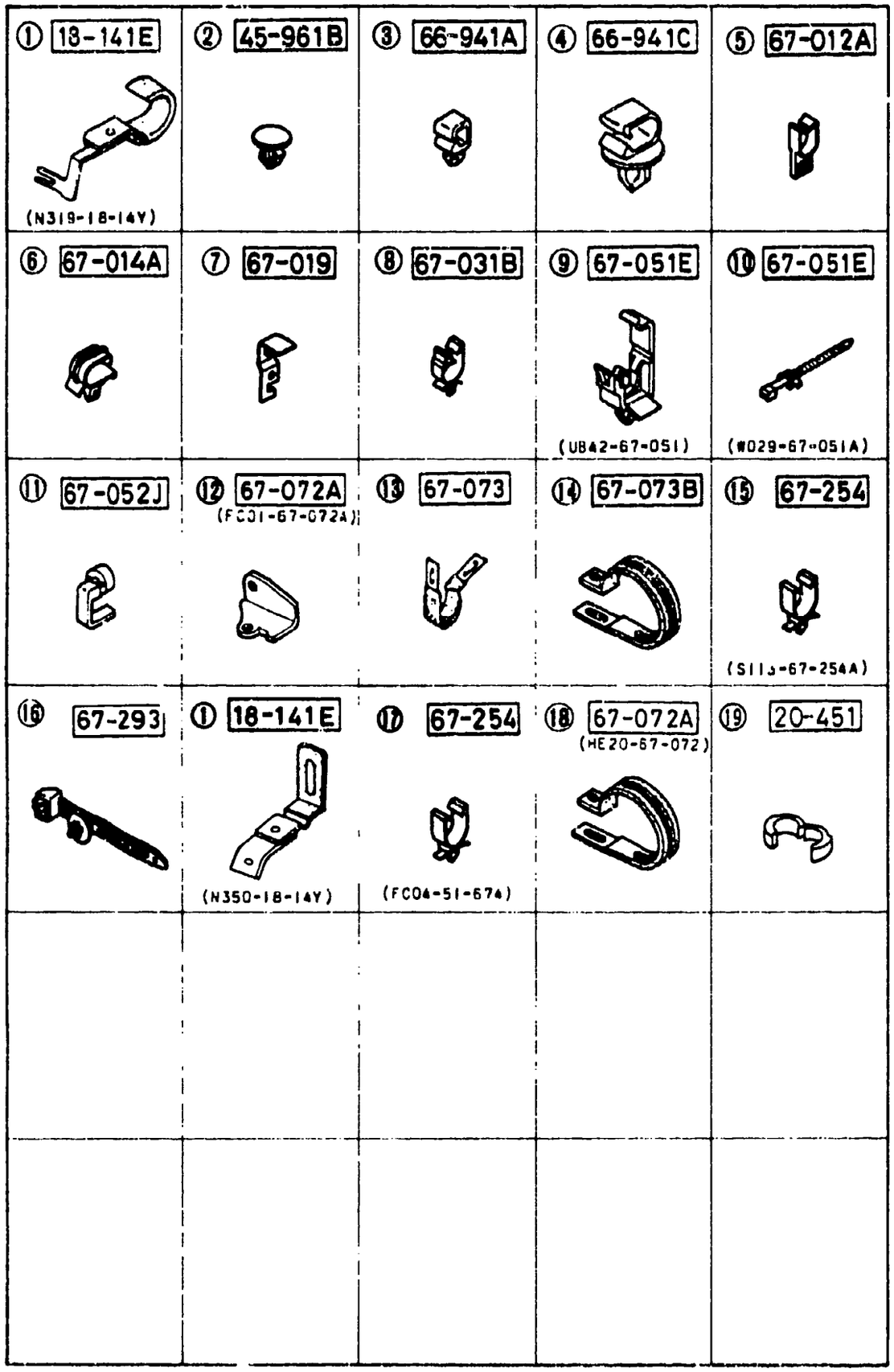

PART NO.	QTY	MODEL/RESTRICTION	MODEL/RESTRICTION	MODEL/RESTRICTION	FROM-TO
CONT'D					
FC01-67-072A	1				
*HE20-67-072	1				
67-073		CLIP			
FB01-67-073A	1				
FB01-67-073A	1				-9801
67-073B		CLIP			
H261-67-073	1				
67-254		CLIP,CABLE			
FC04-51-674	2	((CONVERTIBLE))(W/O AIR BAG))			
S113-67-254A	2	((CONVERTIBLE))(W/O AIR BAG)) (CPE)			
67-293		CLIP,CABLE			
S083-67-253	1				

9801 FC3####-800894

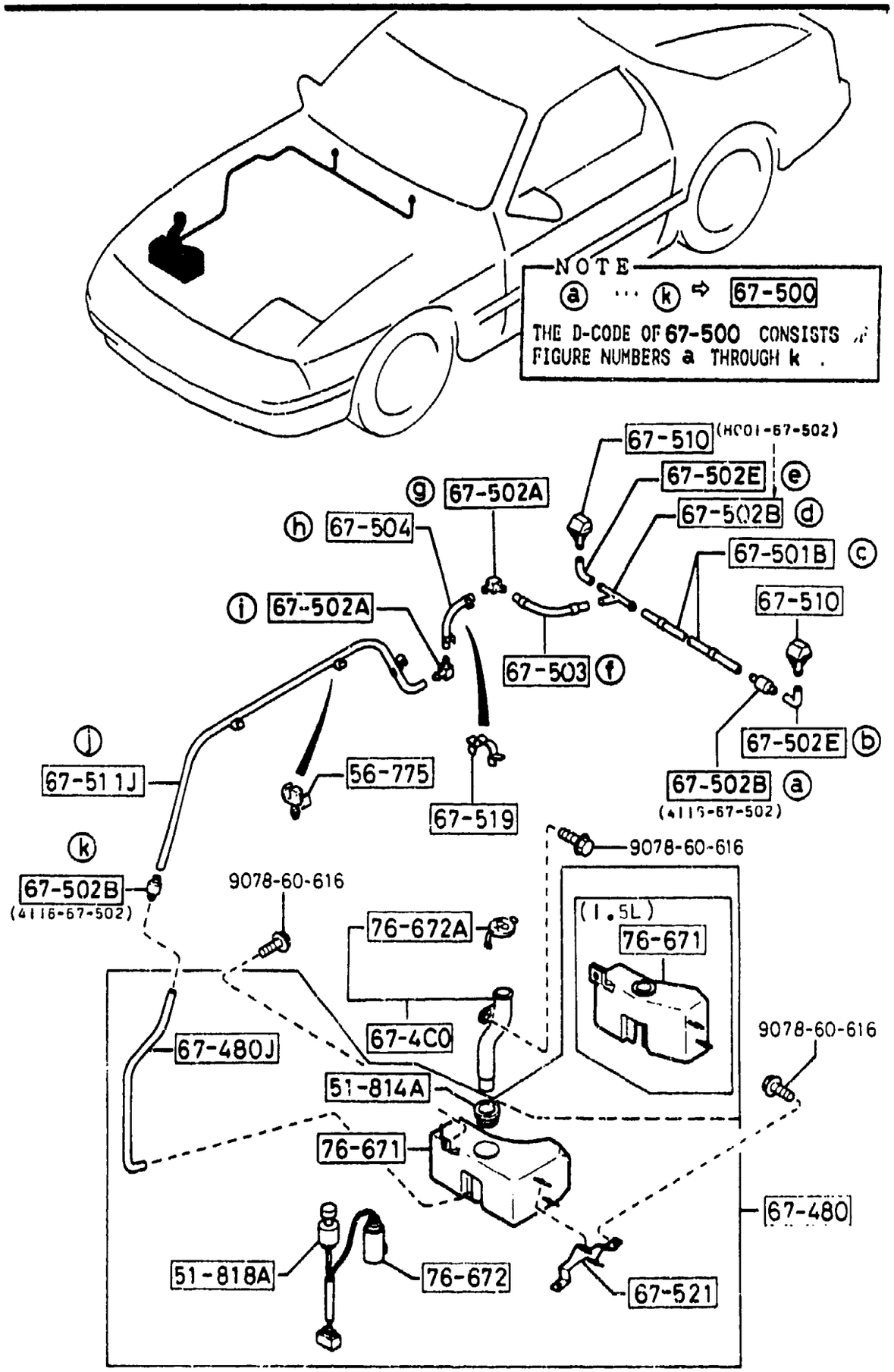

AUFA02

PART NO.	QTY	MODEL/RESTRICTION	MODEL/RESTRICTION	MODEL/RESTRICTION	FROM-TO
51-814A		GROMMET,WASHER TANK			
FB01-51-816	1				
51-818A		SWITCH,LEVEL-WASHER TANK			
FB01-67-488A	1				
56-775		CLIP,WIRE-BONNET			
H260-67-519A	3				
67-4C0		PIPE,FILLER-F.WASHER TANK			
FB01-67-4C0B	1				
67-480		TANK,WASHER-FRONT			
FB01-67-4T0D	1	USA, (W/WASHER TANK 1.5L)			
FB03-67-4T0D	1	NON USA,			
67-480J		PIPE,VINYL			
FB04-67-503A	1				
67-500		PIPE			
FB01-67-500C	1				
67-501B		HOSE'A',WASHER			
FB01-67-501C	1				
67-502A		JOINT,HOSE			
H261-67-502	2				
67-502B		JOINT,HOSE			
H001-67-502	1				
4116-67-502	2				
67-502E		JOINT,ELBOW-W.TANK			
S084-67-502	2				
67-503		HOSE'B',WASHER			
FB01-67-503A	1				
67-504		HOSE'C',WASHER			

CAT. AUFA02-06

1992-05

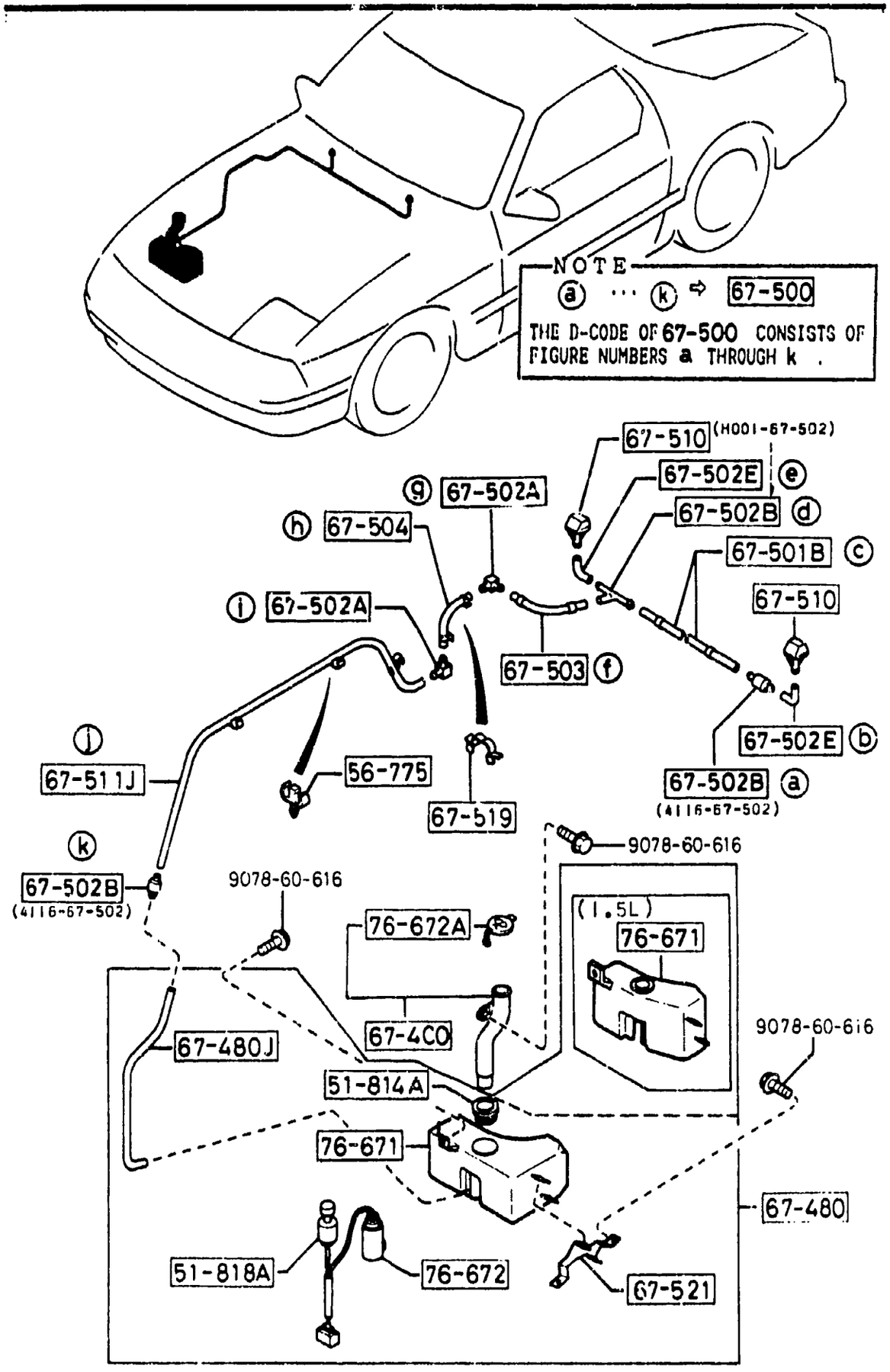

AUFA02

PART NO.	QTY	MODEL/RESTRICTION	MODEL/RESTRICTION	MODEL/RESTRICTION	FROM-TO
CONT'D					
FB01-67-504A	1				
67-510		NOZZLE,WASHER-F.WIND			
FB01-67-510	2				
67-511J		PIPE,SCREEN WASHER			
FB02-67-503A	1				
67-519		CLIP,PIPE			
FB01-67-519A	3				
67-521		BRACKET,WASHER TANK			
FB04-67-485	1				
76-671		TANK,WASHER			
FB01-67-481	1	USA, (W/WASHER TANK 1.5L)			
FB03-67-481	1	NON USA,			
76-672		PUMP,WASHER			
FB01-67-482B	1				
76-672A		CAP,TANK			
FB01-67-483	1				

CAT. AUFA02-06

1992-05

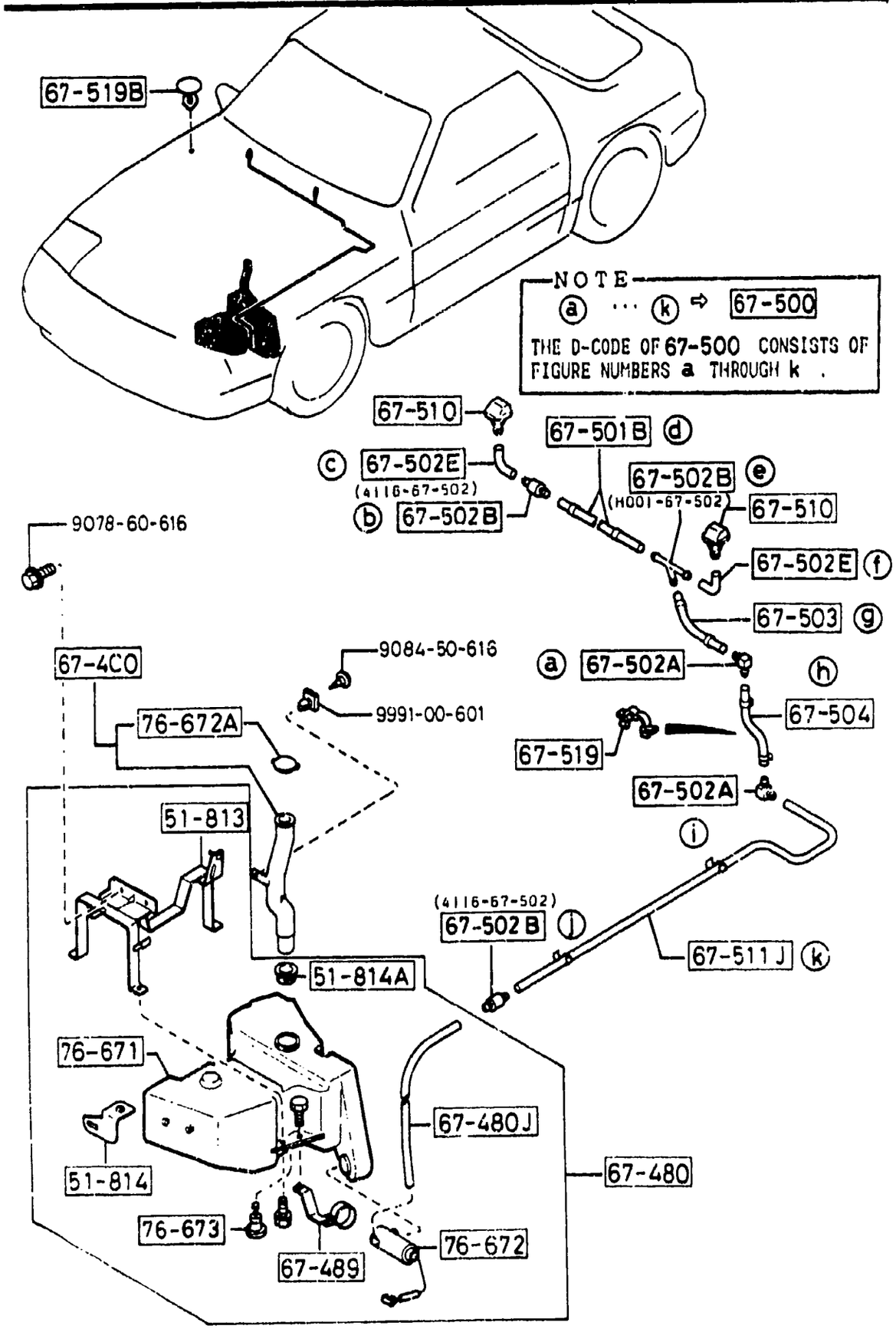

6720 A-1 WINDSHIELD WASHER
(5.7L)

PART NO.	QTY	MODEL/RESTRICTION	MODEL/RESTRICTION	MODEL/RESTRICTION	FROM-TO
51-813		HOLDER'A'			
FB01-51-814	1				
51-814		HOLDER'B'			
FB01-51-819	1				
51-814A		GROMMET,WASHER TANK			
FB01-51-816	1				
67-4C0		PIPE,FILLER-F.WASHER TANK			
FB05-67-4C0B	1				
67-480		TANK,WASHER-FRONT			
FB05-67-4T0E	1				
67-480J		PIPE,VINYL			
FB05-67-501B	1				
67-489		HOLDER,PUMP-WASHER			
FB05-67-489	1				
67-500		PIPE			
FB05-67-500C	1				
67-501B		HOSE'A',WASHER			
FB01-67-501C	1				
67-502A		JOINT,HOSE			
H261-67-502	2				
67-502B		JOINT,HOSE			
H001-67-502	1				
4116-67-502	2				
67-502E		JOINT,ELBOW-W.TANK			
S084-67-502	2				
67-503		HOSE'B',WASHER			
FB48-67-503A	1				

6720 A WINDSHIELD WASHER
(5.7L)

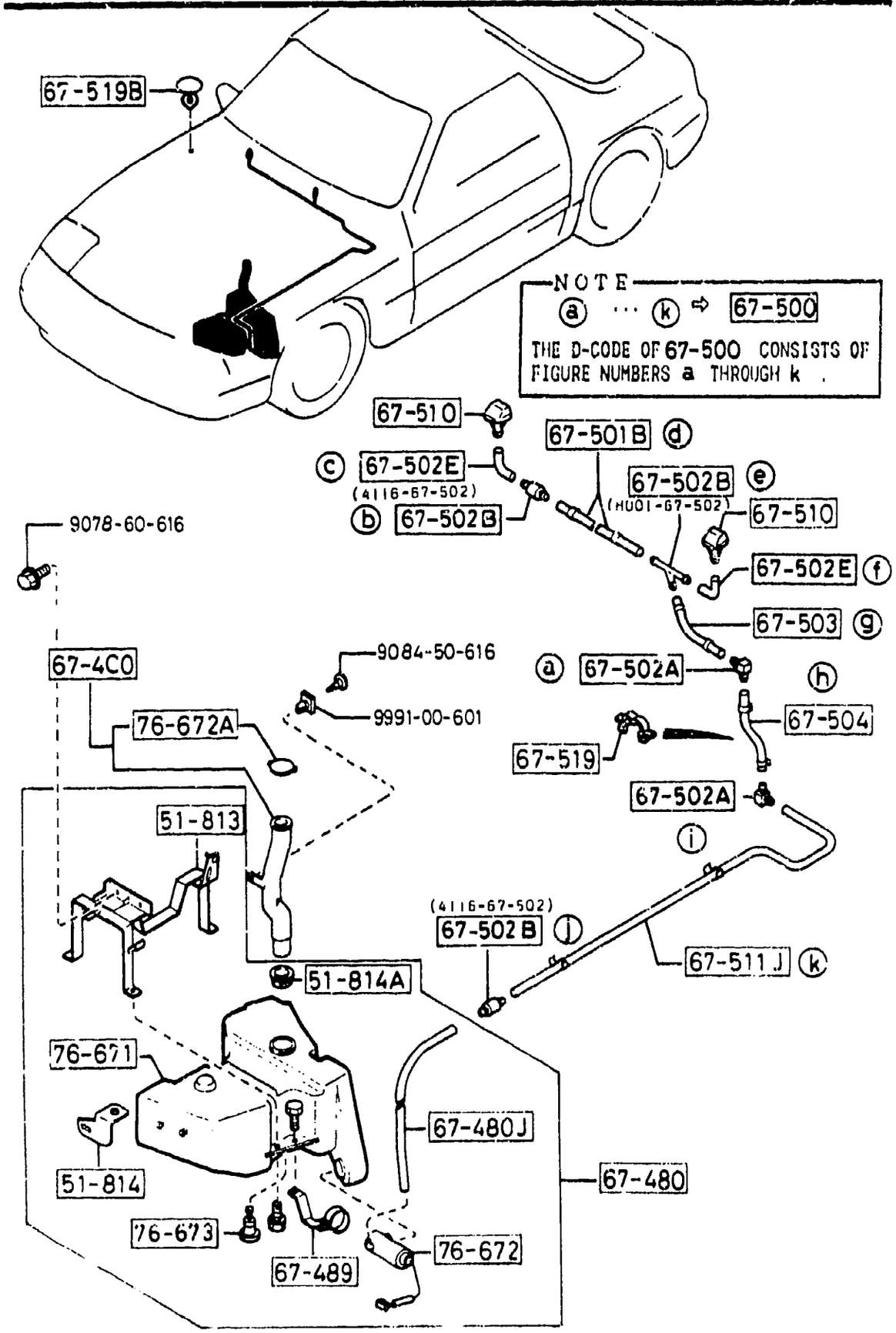

6720 A-2 ✖ WINDSHIELD WASHER
(5.7L)

PART NO.	QTY	MODEL/RESTRICTION	MODEL/RESTRICTION	MODEL/RESTRICTION	FROM-TO
67-504		HOSE'C',WASHER			
FB05-67-504	1				
67-510		NOZZLE,WASHER-F.WIND			
FB01-67-510	2				
67-511J		PIPE,SCREEN WASHER			
FB03-67-503A	1				
67-519		CLIP,PIPE			
FB01-67-519A	3				
67-519B		CLIP			
FB03-67-519	3				
76-671		TANK,WASHER			
FB05-67-481A	1				
76-672		PUMP,WASHER			
FB05-67-482B	1				
76-672A		CAP,TANK			
UB39-51-815	1				
76-673		SWITCH,LEVEL			
FB05-67-488	1				

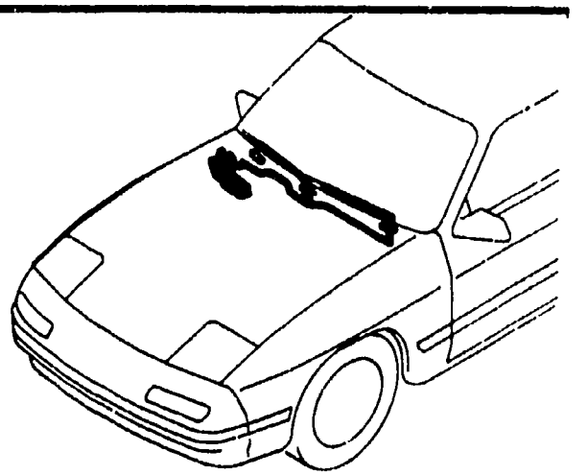

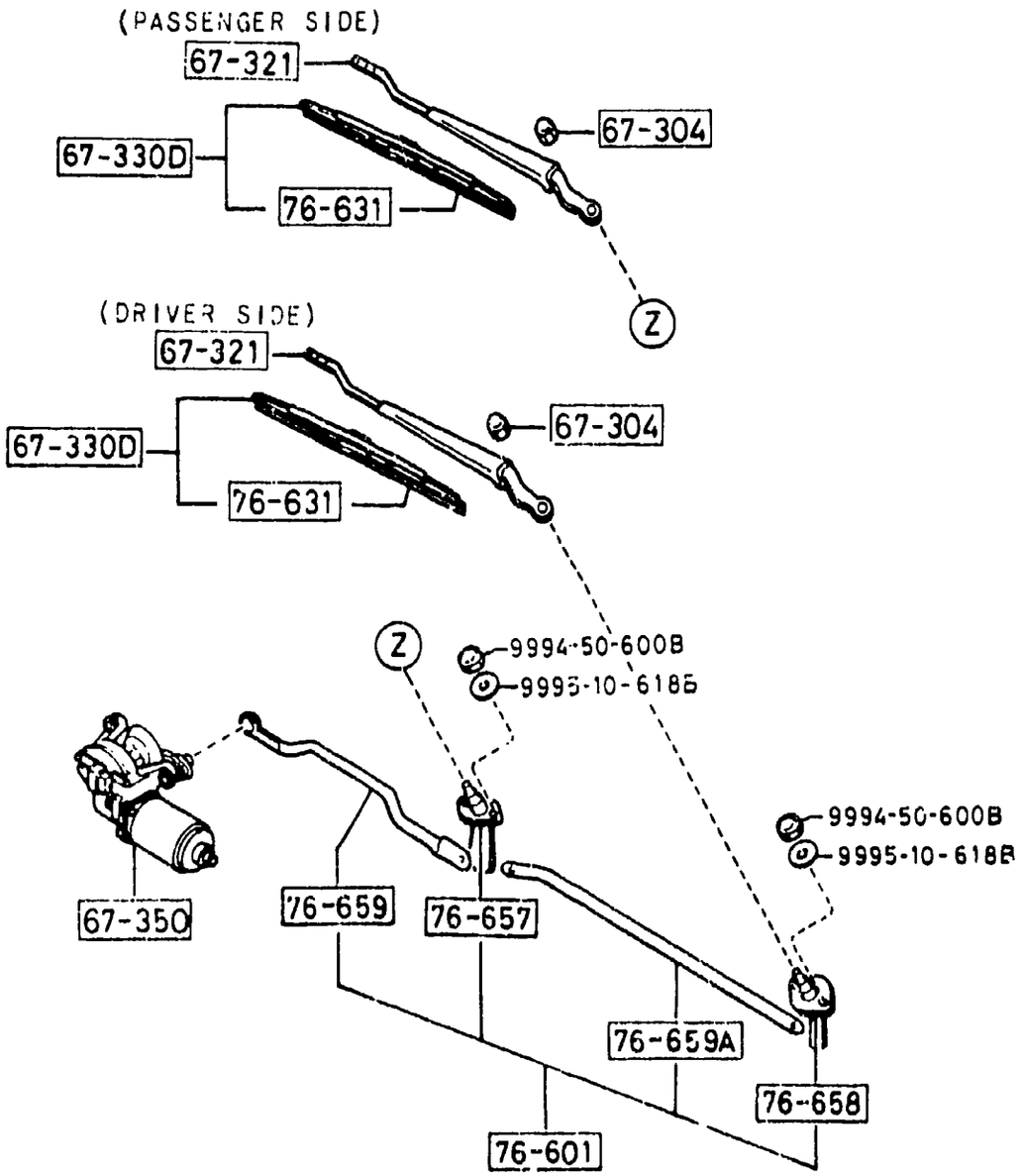

PART NO.	QTY	MODEL/RESTRICTION	MODEL/RESTRICTION	MODEL/RESTRICTION	FROM-TO
67-304		NUT,WIPER ARM-FRONT			
FB01-67-304	2				
67-321		ARM,WIPER			
FB01-67-321B	1	(PASSENGER SIDE)			
FB02-67-321A	1	(DRIVER SIDE)			
67-330D		BLADE(L),WIPER-FRONT			
HE76-67-330 A (HE76-67-330A)	2				-9A01
HE76-67-330A	2				9A01-
67-350		MOTOR,WIPER			
FB06-67-350	1				
76-601		LINK,WIPER			
FB01-67-360C	1	USA, (MILE/KM)			
FB06-67-360	1	NON USA,			
76-631		RUBBER,BLADE-FRONT			
HE76-67-331 A (HE76-67-331A)	2				-9A01
HE76-67-331A	2				9A01-
76-657		SHAFT,DRIVE NO.1			
FB01-67-363	1	USA, (MILE/KM)			
FB06-67-363	1	NON USA,			
76-658		SHAFT,DRIVE NO.2			
FB01-67-364	1	USA, (MILE/KM)			
FB06-67-364	1	NON USA,			
76-659		ARM NO 1,LINK			
FB01-67-361	1				
76-659A		ARM NO.2,LINK			
FB01-67-362	1				

9A01 FC3*MM-803554

LO.NO	SEC.NO	SECTION NAME
4-C03	6100	HEATER
4-E03	6110	HEATER UNIT COMPONENTS
4-F03	6115	HEATER CONTROLS COMPONENTS
4-G03	6120	HEATER BLOWER COMPONENTS
4-I03	6130	AIR CONDITIONER
4-J03	6230	LIFT GATE MECHANISMS (COUPE)
4-M03	6300	WINDOW GLASSES (COUPE)
4-N03	6300A	WINDOW GLASSES (CONVERTIBLE)
4-C04	6330	SUNROOF (COUPE)
4-G04	6330A	SUNROOF (CONVERTIBLE)
4-M04	6600	SWITCHES & RELAYS (ENGINE)
4-G05	6610	DASHBOARD SWITCHES
4-H05	6611	COMBINATION SWITCH
4-I05	6612	CLUSTER SWITCH
4-L05	6615	POWER WINDOW SWITCHES
4-M05	6630	RELAYS & UNIT (BODY)
4-D06	6635	DOOR SWITCH & HORNS
4-E06	6640	AUTO CRUISE CONTROL SYSTEM
4-F06	6680	AUDIO SYSTEMS (RADIO & TAPE DECK) (COUPE)
4-K06	6680 A	AUDIO SYSTEMS (RADIO & TAPE DECK) (CONVERTIBLE)
4-M06	6682	AUDIO SYSTEMS (ANTENNA & SPEAKER) (COUPE)
4-D07	6682 A	AUDIO SYSTEMS (ANTENNA & SPEAKER) (CONVERTIBLE)
4-G07	6684	AUDIO SYSTEMS(NOISE SUPPRESSOR & EARTH CORD)
4-H07	6700	WIRING HARNESSES(FRONT & REAR)
4-N07	6701	WIRING HARNESSES(ENGINE & T/MISSION)
4-D08	6702	WIRING HARNESSES(DASHBOARD)
4-E08	6703	WIRING HARNESSES(DOOR,FLOOR/CEILING)
4-G08	6704	WIRING HARNESS CLAMPS
4-J08	6720	WINDSHIELD WASHER (1.5L & 2.5L)
4-L08	6720 A	WINDSHIELD WASHER (5.7L)
4-N08	6730	WINDSHIELD WIPERS
4-C09	6740	WIPER MOTOR COMPONENTS(FRONT)
4-D09	6750	WINDOW WIPER & WASHER (REAR)
4-G09	6760	WINDOW WIPER MOTOR COMPONENTS (REAR)
4-H09	6800	CEILING TRIMS (COUPE)
4-J09	6800A	CEILING TRIMS (CONVERTIBLE)
4-K09	6810	ROLLEBAR (CONVERTIBLE)
4-N09	6820	PILLAR TRIMS (COUPE)
4-F10	6820A	PILLAR TRIMS (CONVERTIBLE)
4-G10	6840	TRIMS & SCUFF PLATES (COUPE)
4-L10	6840A	TRIMS & SCUFF PLATES (CONVERTIBLE)
4-N10	6845	STRAGE BOX (COUPE) (GXL,TURBO)
4-D11	6860	FLOOR MATS & PADS (COUPE)
4-K11	6860A	FLOOR MATS & PADS (CONVERTIBLE)
4-C12	6870	SERVICE TOOLS
4-D12	6900	VISORS,ASSIST HANDLES & MIRRORS (COUPE)
4-H12	6900A	VISORS,ASSIST HANDLES & MIRRORS (CONVERTIBLE)
4-K12	6930	CAUTION PLATES & LABELS
4-N12	7250	QUARTER WINDOW & TRIMS
4-E13	7800	SPOILERS & RELATED PARTS
4-C14	7900	ACCESSORIES

LO.NO	SEC.NO	SECTION NAME

COMPONENTS OF FB06-67-350

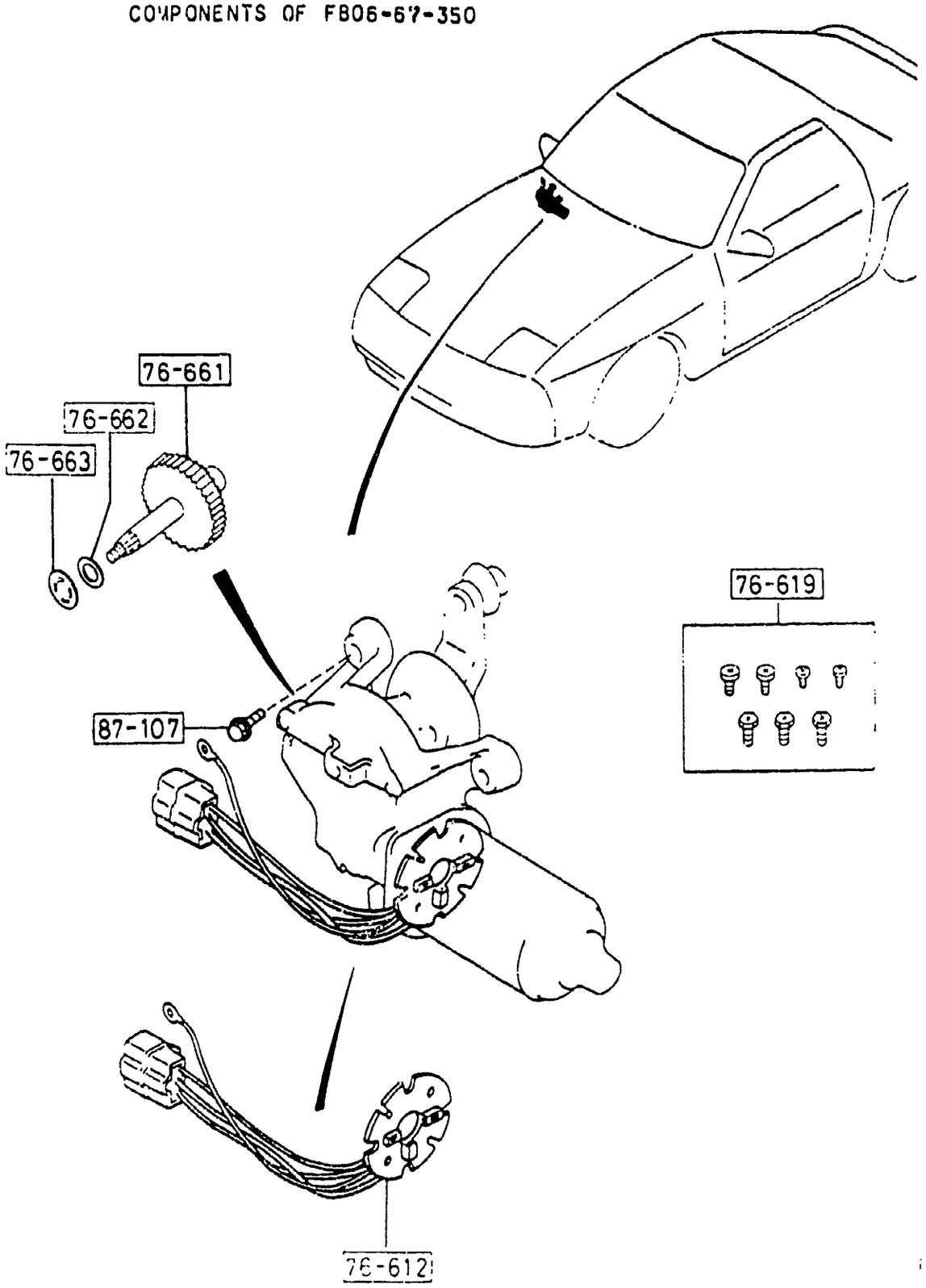

PART NO.	QTY	MODEL/RESTRICTION	MODEL/RESTRICTION	MODEL/RESTRICTION	FROM-TO
76-612 FB05-67-351	1	PLATE,HOLDER-BRUSH			
76-619 H043-76-619A	1	PARTS SET			
76-661 GJ83-67-354	1	GEAR,SHAFT			
76-662 B094-76-662	1	WASHER			
76-663 B094-76-663	1	WASHER,TOOTHED			
87-107 B092-76-623	1	SCREW			

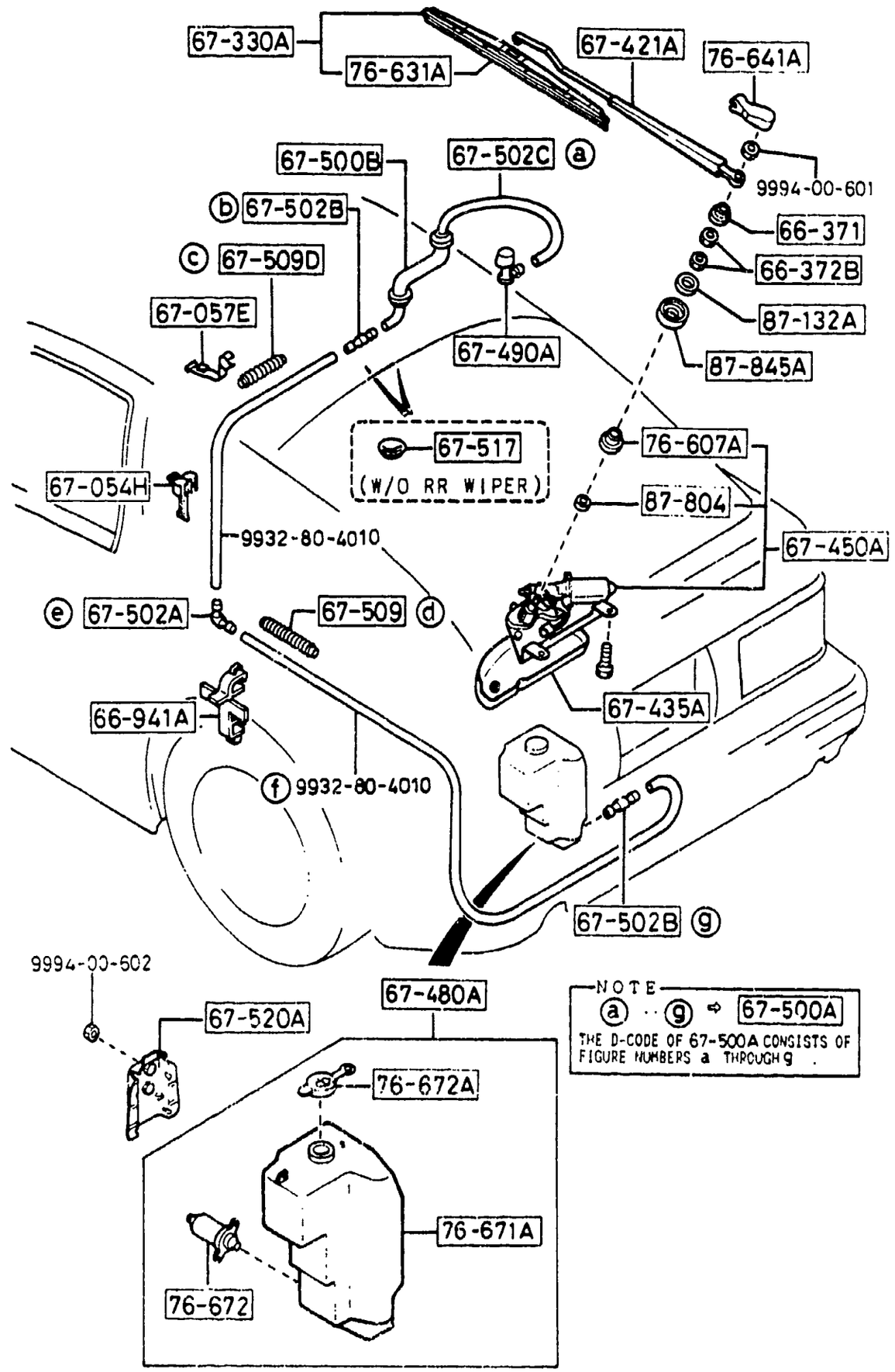

NOTE
ⓐ ‥ ⓖ ⇨ 67-500A
THE D-CODE OF 67-500A CONSISTS OF FIGURE NUMBERS a THROUGH g .

PART NO.	QTY	MODEL/RESTRICTION	MODEL/RESTRICTION	MODEL/RESTRICTION	FROM-TO
66-371 FB02-67-366A	1	CAP,SEAL			
66-372B D001-76-605	2	NUT			
66-941A GB08-66-941	1	CLIP			
67-054H FB02-67-056	3	CLIP,OPENER CABLE			
67-057E FB02-67-057	2	CLIP'B',PIPE-REAR WASHER			
67-330A FB02-67-330	1	BLADE,WIPER-REAR			
67-421A FC01-67-421	1	ARM,WIPER			
67-435A FB02-67-458B	1	COVER,WIPER MOTOR			
67-450A FB02-67-450A	1	MOTOR			
67-480A FB02-67-480A	1	TANK,WASHER-REAR			
67-490A FB02-67-510	1	NOZZLE,WASHER-R.WIND			
67-500A FB02-67-500	1	PIPE,REAR WASHER-LOWER			
67-500B FB04-67-500B	1	PIPE,REAR WASHER-UPPER			
67-502A S013-67-502	1	JOINT,HOSE			

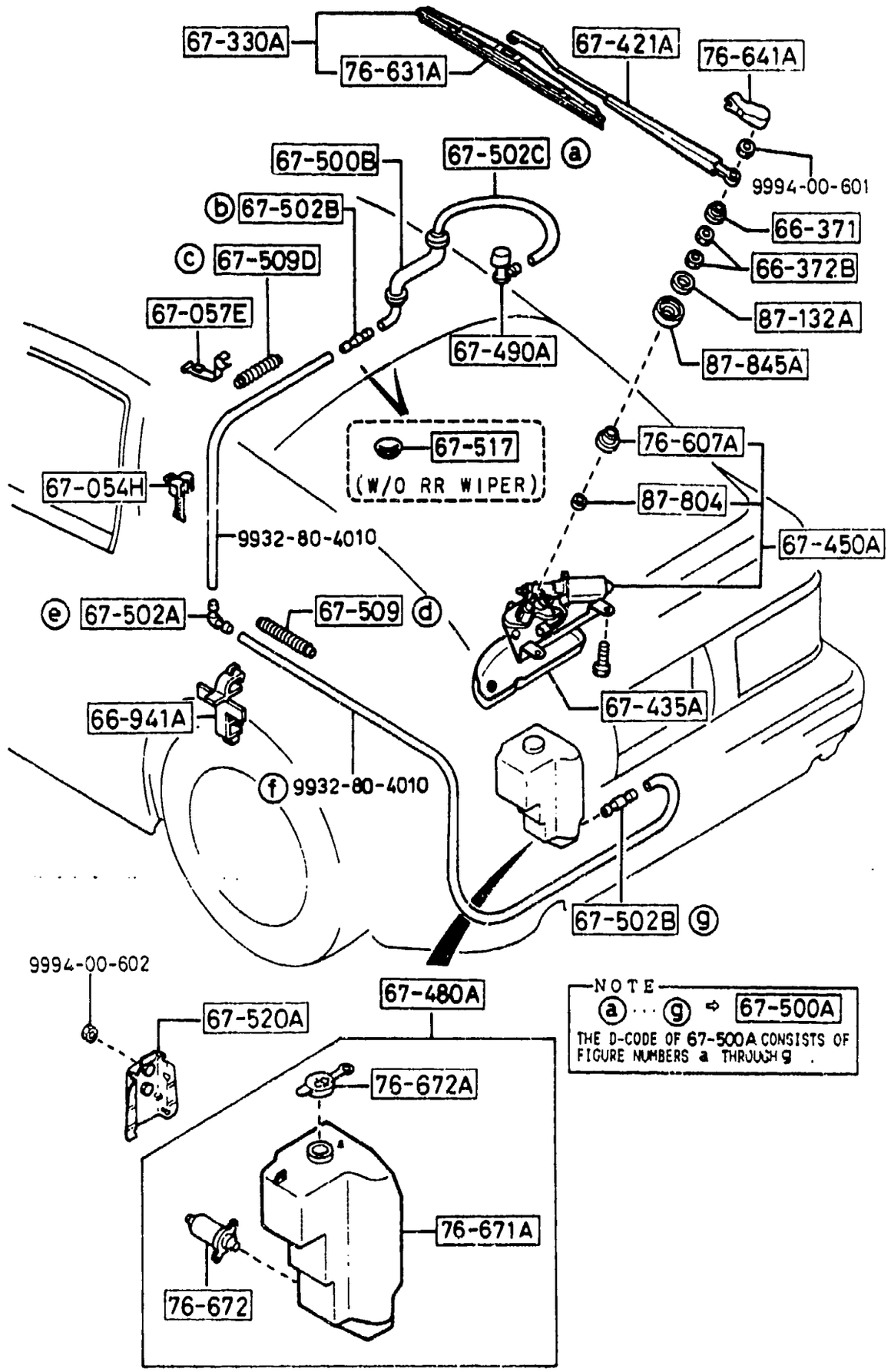

AUFA02

PART NO.	QTY	MODEL/RESTRICTION	MODEL/RESTRICTION	MODEL/RESTRICTION	FROM-TO
67-502B 4116-67-502	2	JOINT,HOSE			
67-502C SA70-67-502	1	JOINT,ELBOW			
67-509 G044-67-509	1	TUBE,CORRUGATE			
67-509D G033-67-509	1	TUBE,CORRUGATE			
67-517 FB01-67-517	2	COVER,HOLE-H/FRAME&FEADER GTU, GTUS, (W/O RR WIPER)			
67-520A FB02-67-520A	1	BRACKET			
76-607A FB02-67-402A	2	BUSH,INNER			
76-631A FB02-67-331	1	RUBBER,BLADE-REAR			
76-641A B093-76-641	1	COVER,WIPER ARM-REAR			
76-671A FB02-67-481	1	TANK,WASHER-RR WIPER			
76-672 8532-76-672	1	PUMP,WASHER			
76-672A G030-76-673A	1	CAP,TANK			
87-132A FB02-67-406	1	WASHER			
87-804		WASHER			

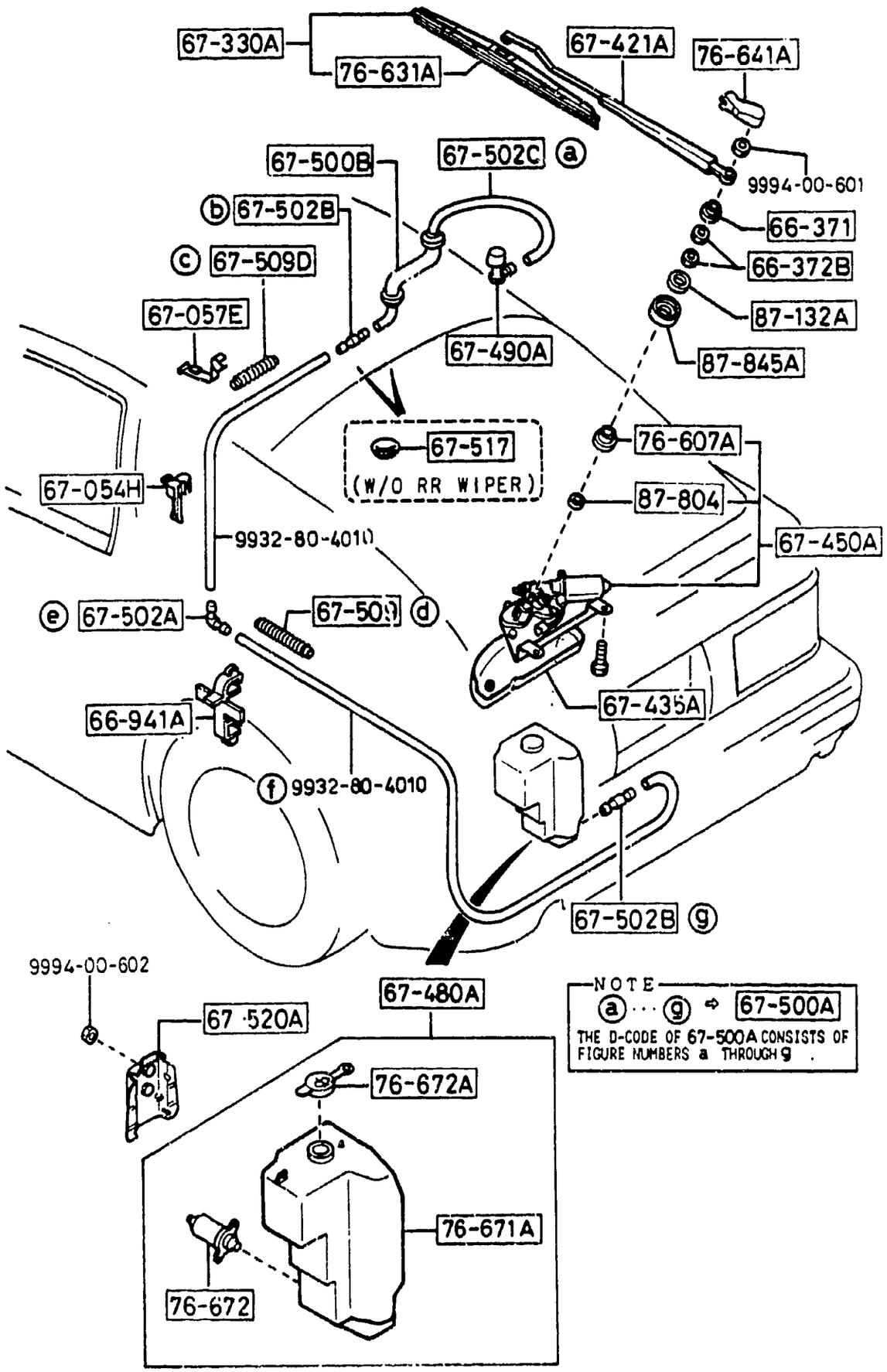

NOTE
ⓐ ··· ⓖ ⇨ 67-500A
THE D-CODE OF 67-500A CONSISTS OF FIGURE NUMBERS a THROUGH g .

PART NO.	QTY	MODEL/RESTRICTION	MODEL/RESTRICTION	MODEL/RESTRICTION	FROM-TO
CONT'D					
FB03-67-406	1				
87-845A		GASKET			
FB02-67-408A	1				

COMPONENTS OF FB02-67-450A

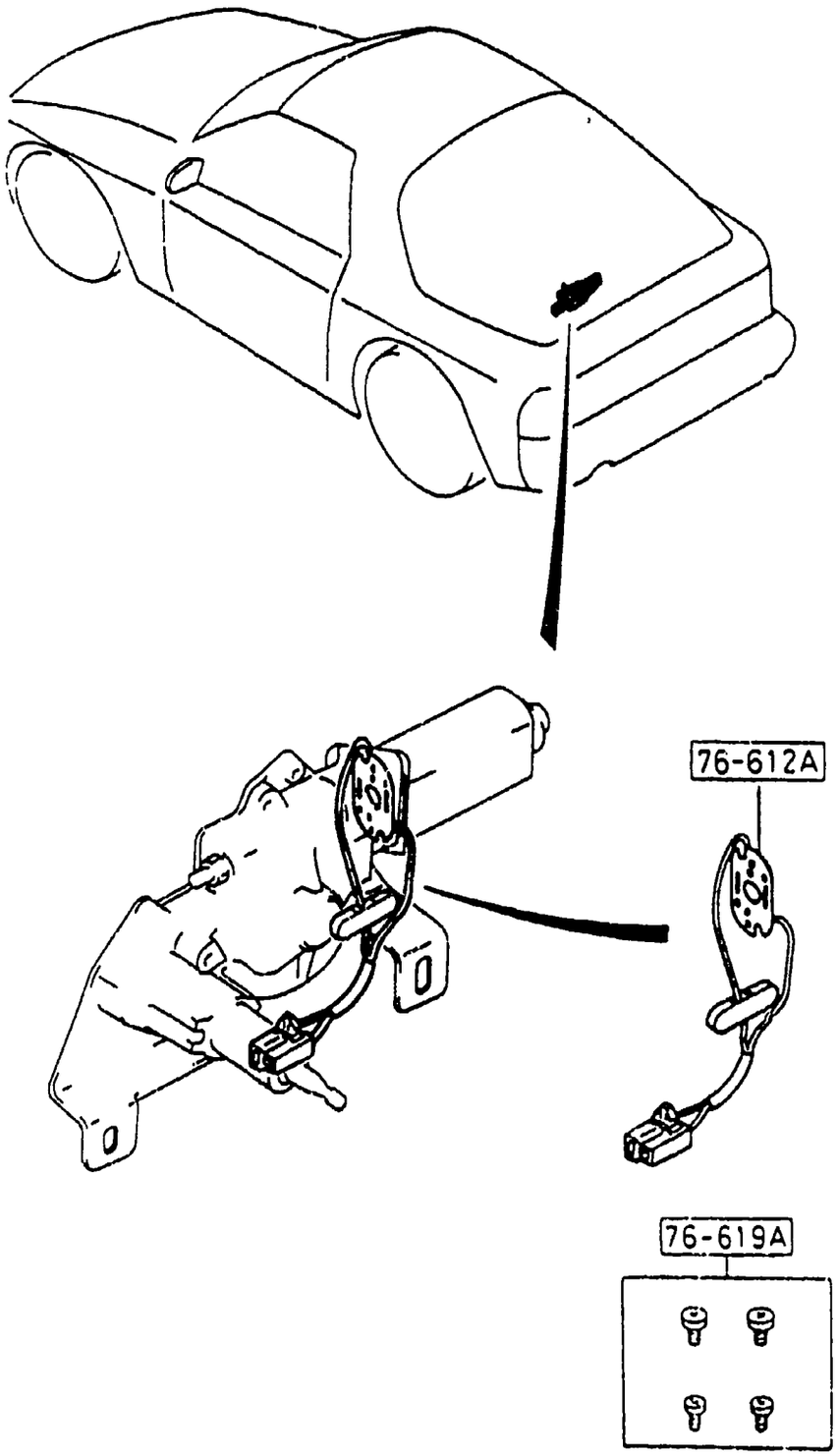

PART NO.	QTY	MODEL/RESTRICTION	MODEL/RESTRICTION	MODEL/RESTRICTION	FROM-TO
76-612A		PLATE,HOLDER-BRUSH			
FB02-67-451	1				
76-619A		PARTS SET			
B002-76-619A	1				

(SUNROOF)

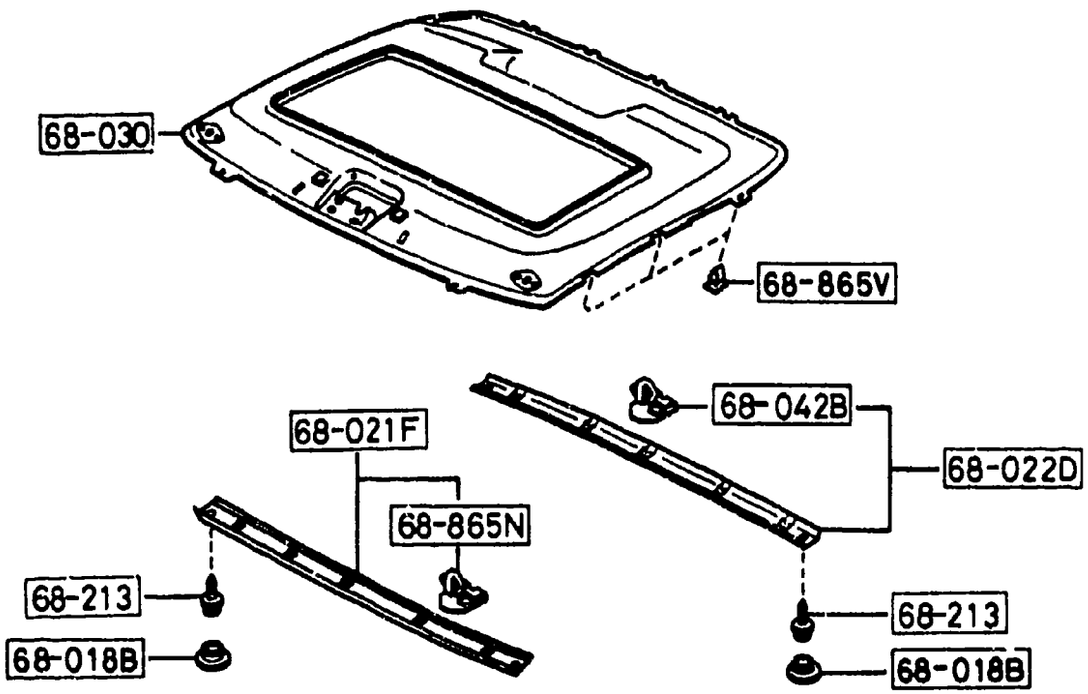

(W/O SUN-RF)

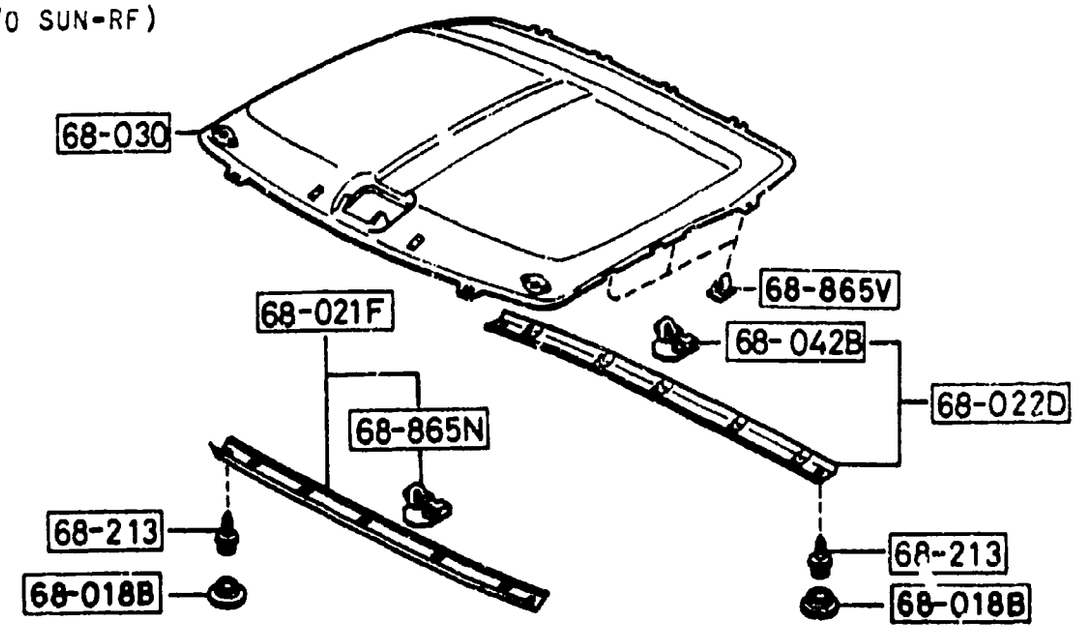

PART NO.	QTY	MODEL/RESTRICTION	MODEL/RESTRICTION	MODEL/RESTRICTION	FROM-TO
68-018B		CAP			
FB01-68-151	4				
02		FD8 FE1 BLACK			
19		FE0 RED			
48		FD9 BLUE			
68-021F		GARNISH,TOP-FRONT			
FB01-68-020	1				
02		FD8 FE1 BLACK			
19		FE0 RED			
48		FD9 BLUE			
68-022D		GARNISH,TOP-REAR			
FB01-68-040	1				
02		FD8 FE1 BLACK			
19		FE0 RED			
48		FD9 BLUE			
68-030		CEILING,TOP			
FC01-68-030	1	GTU, (UNWOVEN CLOTH) (W/O SUN-RF)			
02		FD8 BLACK			
19		FE0 RED			
48		FD9 BLUE			
FC02-68-030	1	GTUS, (KNIT CLOTH) (W/O SUN-RF)			
02		FD8 BLACK			
19		FE0 RED			
48		FD9 BLUE			
FC03-68-030	1	GXL, TURBO, (KNIT CLOTH) (SUNROOF)			
02		FD8 BLACK			
19		FE0 RED			
48		FD9 BLUE			
FC04-68-030	1	GTU, (UNWOVEN CLOTH) (SUNROOF)			

(SUNROOF)

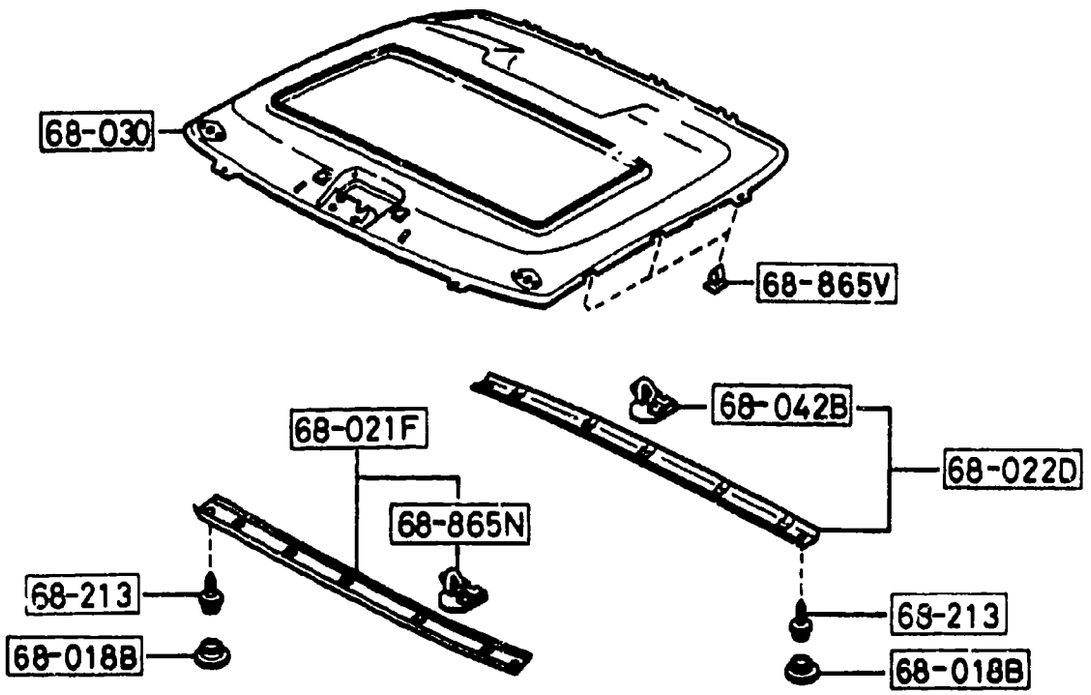

(W/O SUN-RF)

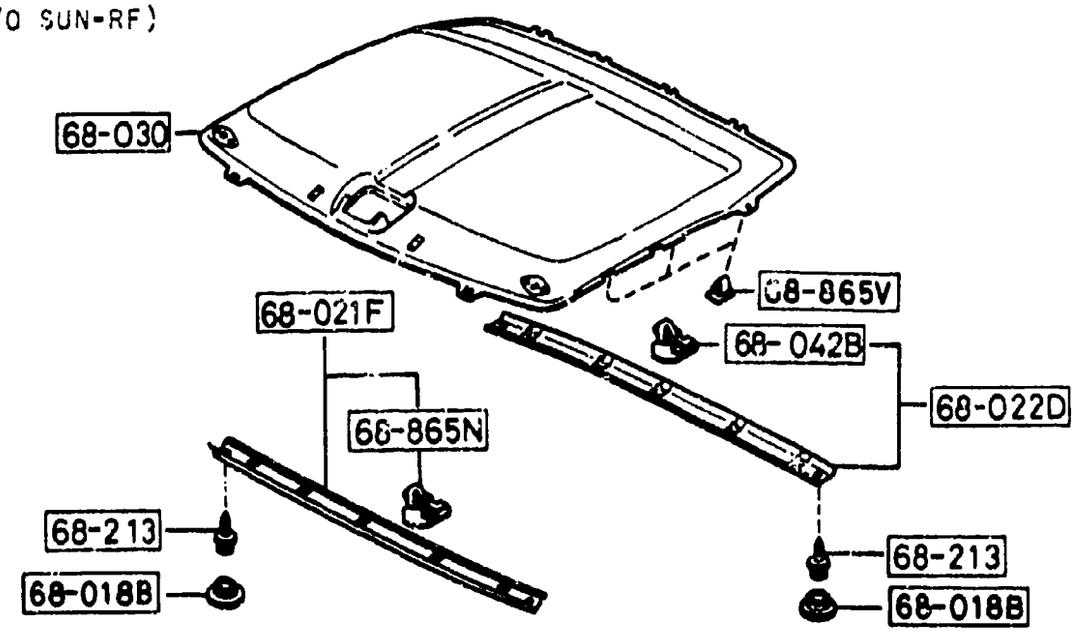

PART NO.	QTY	MODEL/RESTRICTION	MODEL/RESTRICTION	MODEL/RESTRICTION	FROM-TO
CONT'D					
02		FD8 BLACK			
19		FE0 RED			
48		FD9 BLUE			
+----------+					
| 68-042B |		CLIP,GARNISH			
+----------+					
FB01-68-042	5				
+----------+					
| 68-213 |		SCREW,TAPPING			
+----------+					
G030-68-213B	4				
+----------+					
| 68-865N |		CLIP,TRIM			
+----------+					
H002-68-865	5				
+----------+					
| 68-865V |		FASTENER,TOP CEILING			
+----------+					
B102-68-012	6				

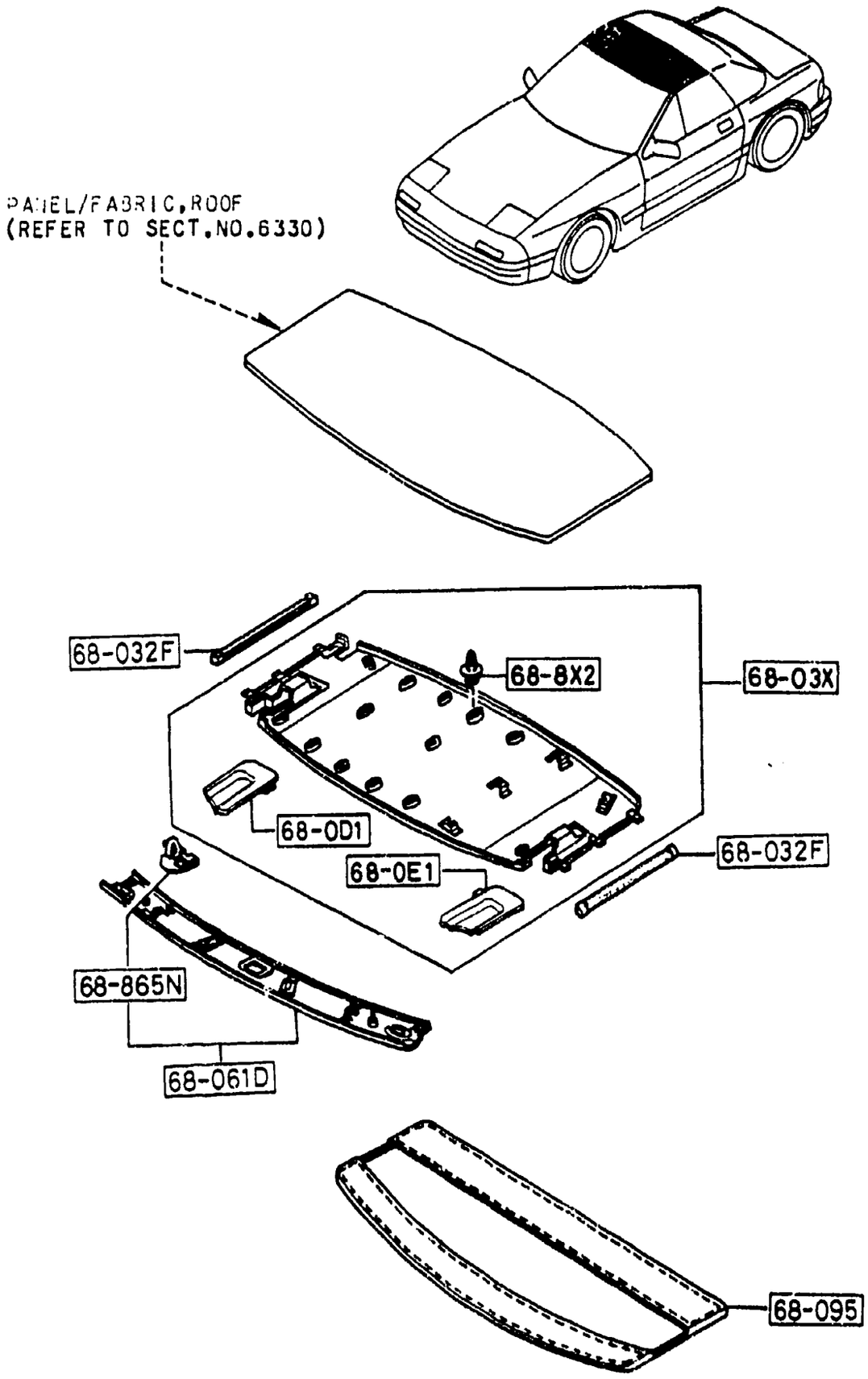

PART NO.	QTY	MODEL/RESTRICTION	MODEL/RESTRICTION	MODEL/RESTRICTION	FROM-TO
68-0D1		LID(R),TOP TRIM			
FB67-68-0D1	1				
02		FD8 FE1 BLACK			
48		FD9 BLUE			
68-0E1		LID(L),TOP TRIM			
FB67-68-0E1	1				
02		FD8 FE1 BLACK			
48		FD9 BLUE			
68-03X		TRIM,TOP			
FB67-68-03XB	1				
02		FD8 FE1 BLACK			
48		FD9 BLUE			
68-032F		WELT,SEAMING-ROOF			
FB67-68-032	2				
02		FD8 FE1 BLACK			
48		FD9 BLUE			
68-061D		TRIM,FRONT HEADER			
FB67-68-020A	1				
02		FD8 FE1 BLACK			
48		FD9 BLUE			
68-095		BAG,ROOF PANEL			
FB67-68-095A	1				
8-8X2		CLIP			
G225-68-8X2	10				
68-865N		CLIP,TRIM			
H002-68-865	2				

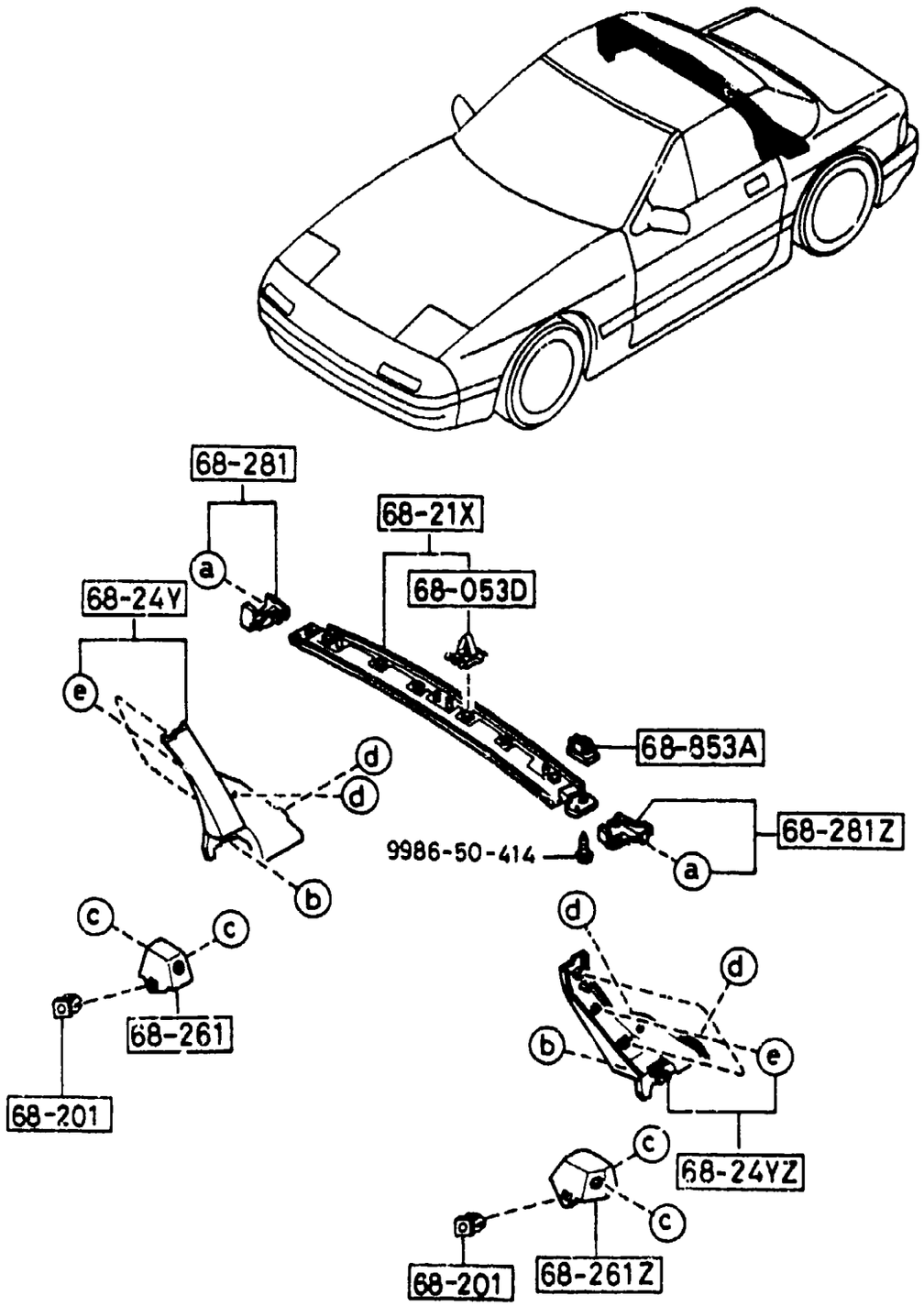

a	b	c	d	e
68-285	68-675	68-865E	68-865Q	68-865S

PART NO.	QTY	MODEL/RESTRICTION	MODEL/RESTRICTION	MODEL/RESTRICTION	FROM-TO
68-053D		CLIP,RR. PILLAR TRIM			
B100-68-279	8				
68-201		GROMMET,SCREW-QTR TRIM			
FB67-68-201	2				
68-21X		TRIM,FORMING BAR			
FB67-68-21XC	1				
02		FD8 FE1 BLACK			
48		FD9 BLUE			
68-24Y		COVER(R),LINK			
FB67-68-24YA	1				
02		FD8 FE1 BLACK			
48		FD9 BLUE			
68-24YZ		COVER(L),LINK			
FB67-68-25YA	1				
02		FD8 FE1 BLACK			
48		FD9 BLUE			
68-26		COVER(R),BELT			
FB67-68-261B	1				
02		FD8 FE1 BLACK			
48		FD9 BLUE			
68-261Z		COVER(L),BELT			
FB67-68-271B	1				
02		FD8 FE1 BLACK			
48		FD9 BLUE			
68-281		COVER(R),HINGE			
FB67-68-28XA	1				-9C01
A (FB67-68-28XB)					
02		FD8 BLACK			
48		FD9 BLUE			
FB67-68-28XB	1				9C01-
02		FD8 FE1 BLACK			

9C01 FC3####-804800

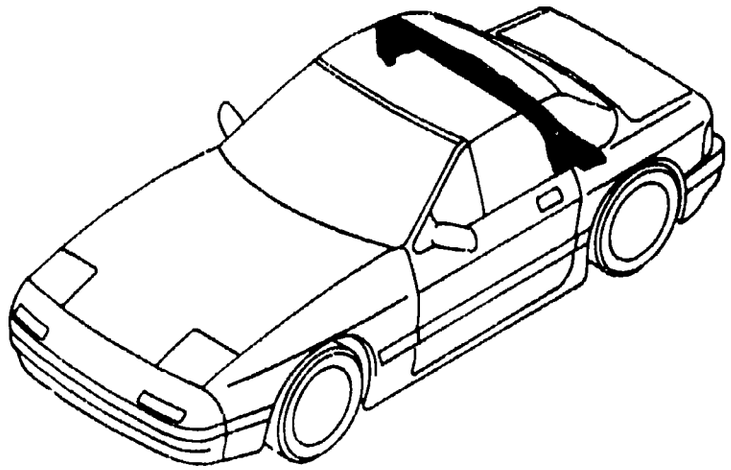

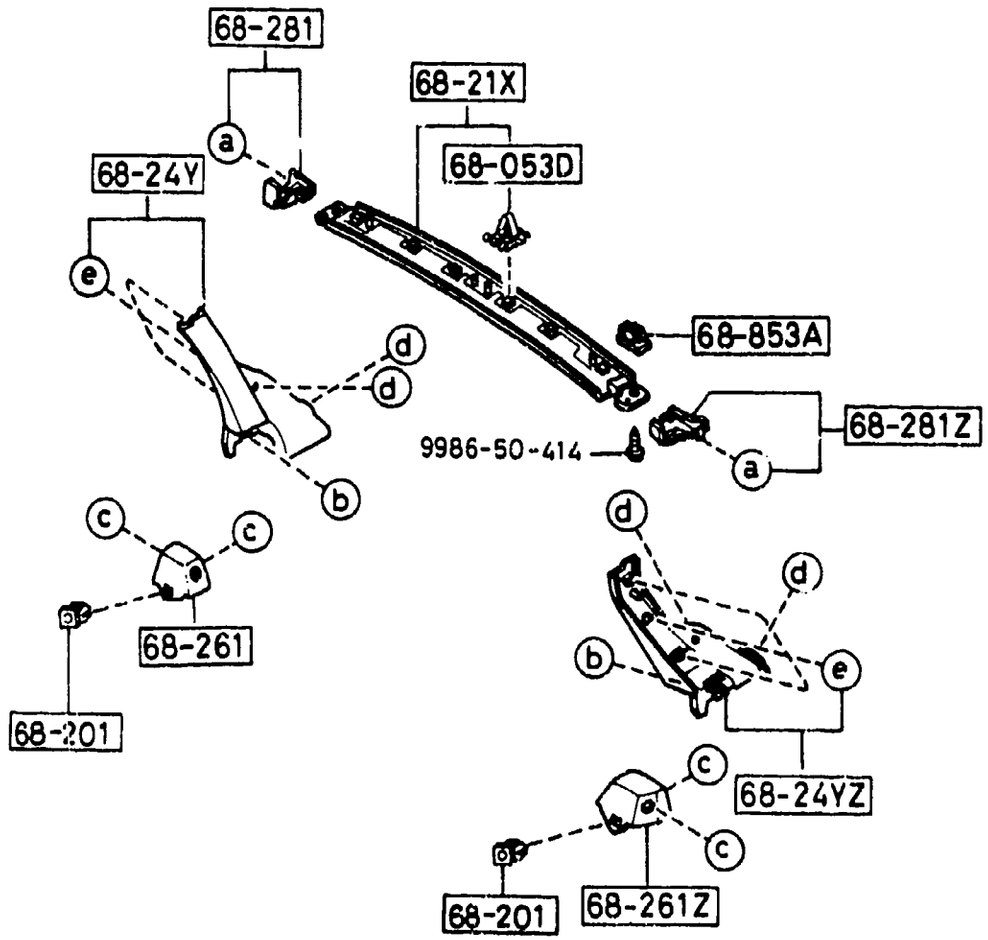

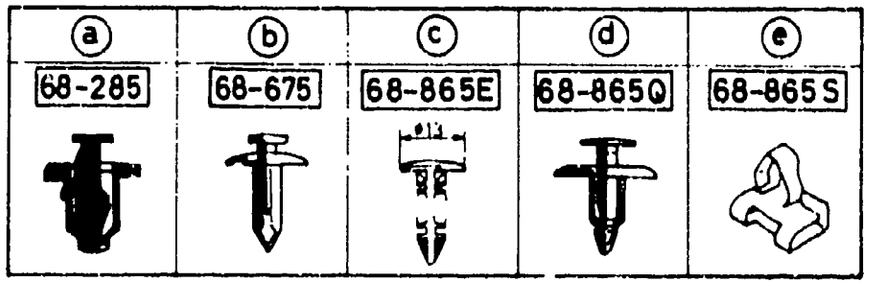

PART NO.	QTY	MODEL/RESTRICTION	MODEL/RESTRICTION	MODEL/RESTRICTION	FROM-TO
CONT'D					
48		FD9 BLUE			
68-281Z		COVER(L),HINGE			
FB67-68-29XA	1				-9C01
A (FB67-68-29XB)					
02		FD8 BLACK			
48		FD9 BLUE			
FB67-68-29XB	1				9C01-
02		FD8 FE1 BLACK			
48		FD9 BLUE			
68-285		FASTENER,HINGE COVER			
FB67-68-285	2				
02		FD8 FE1 BLACK			
48		FD9 BLUE			
68-675		FASTENER			
B100-68-675	2				
02		FD8 FE1 BLACK			
48		FD9 BLUE			
68-853A		GROMMET,SCREW-T/SIDE TRIM			
FB02-68-853	2				
68-865E		FASTENER			
S049-68-865	4				
00		FD8 FD9 FE0 FE1 BLACK			
68-865Q		FASTENER			
GJ21-68-885A	4				-9526
AN(GJ21-68-885B)					
02		FD8 BLACK			
48		FD9 BLUE			
GJ21-68-885B	4				9526-
02		FD8 FE1 BLACK			
48		FD9 BLUE			
68-865S		CLIP,TRIM			

9526 FC3####-707799
9C01 FC3####-804800

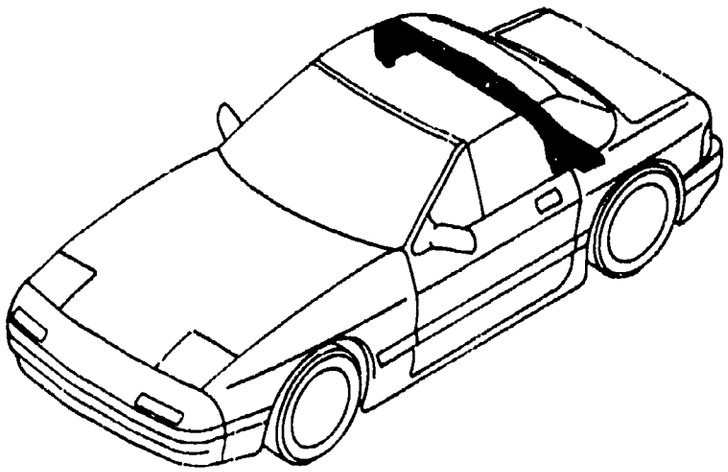

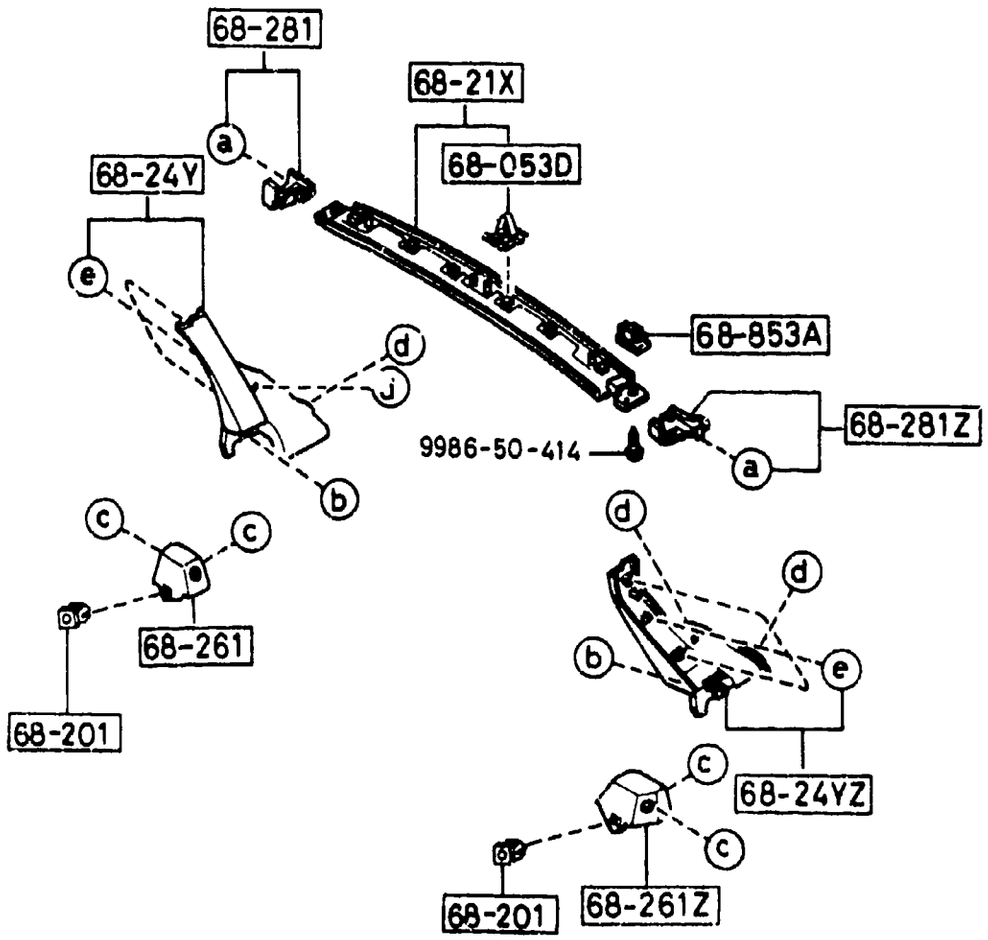

a	b	c	d	e
68-285	68-675	68-865E	68-865Q	68-865S
				

PART NO.	QTY	MODEL/RESTRICTION	MODEL/RESTRICTION	MODEL/RESTRICTION	FROM-TO
CONT'D GJ12-68-865	6				

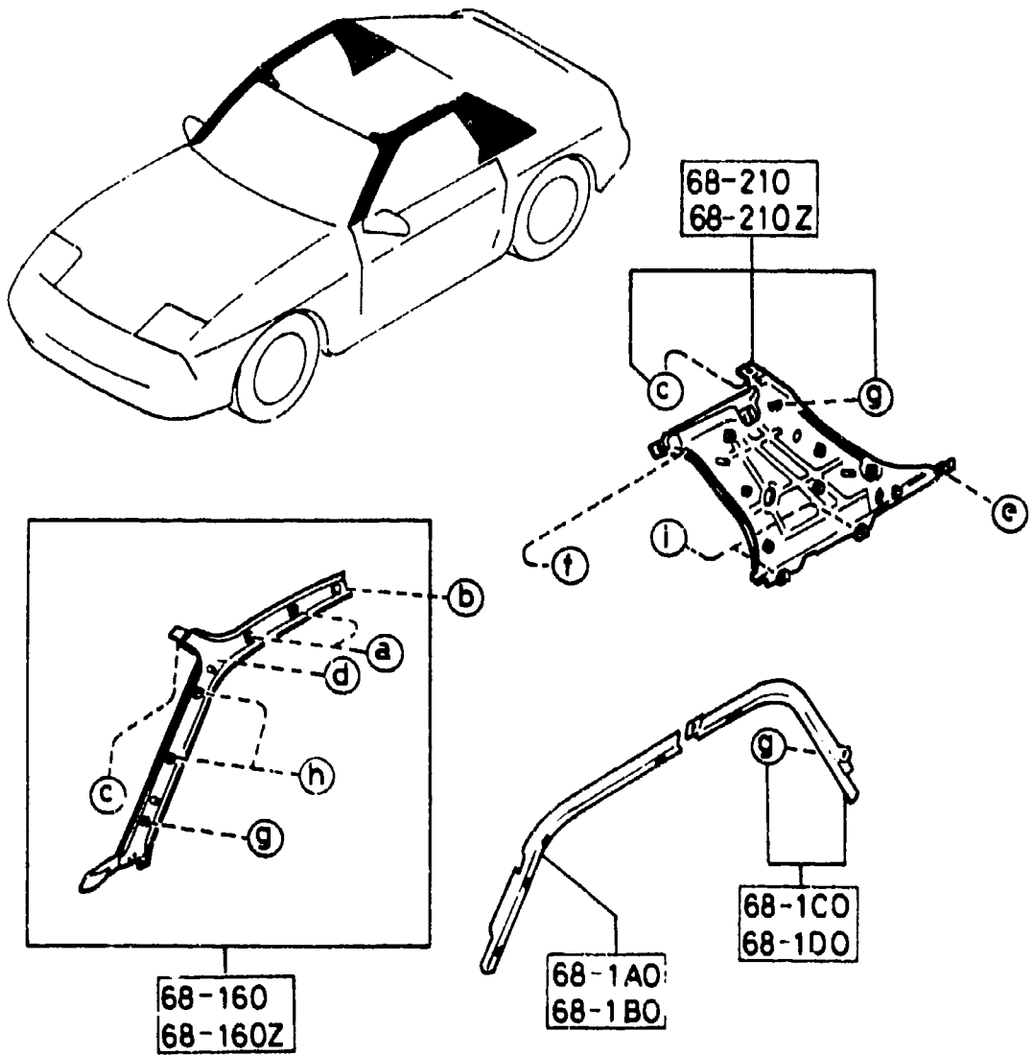

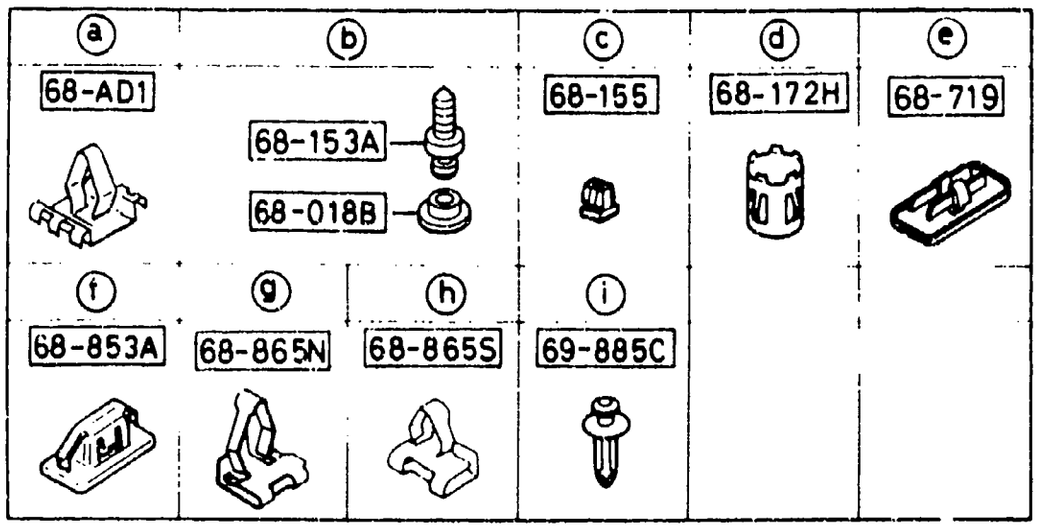

PART NO.	QTY	MODEL/RESTRICTION	MODEL/RESTRICTION	MODEL/RESTRICTION	FROM-TO
68-AD1		CLIP,SLIDE			
FC01-68-AD1 A (FC01-68-AD1A)	4				-9113
FC01-68-AD1A	4				9113-
68-018B		CAP			
FB01-68-151	2				
02		FD8 FE1 BLACK			
19		FE0 RED			
48		FD9 BLUE			
68-1A0		COVER(R),RAIL-FRT			
FC01-68-1A0B	1				
02		FD8 FE1 BLACK			
19		FE0 RED			
48		FD9 BLUE			
68-1B0		COVER(L),RAIL-FRT			
FC01-68-1B0B	1				
02		FD8 FE1 BLACK			
19		FE0 RED			
48		FD9 BLUE			
68-1C0		COVER(R),RAIL-RR			
FC01-68-1C0A	1				
02		FD8 FE1 BLACK			
19		FE0 RED			
48		FD9 BLUE			
68-1D0		COVER(L),RAIL-RR			
FC01-68-1D0A	1				
02		FD8 FE1 BLACK			
19		FE0 RED			
48		FD9 BLUE			
68-153A		SCREW,TAPPING			
UB39-68-153	2				

9113 FC3***-700067

LO.NO	SEC.NO	SECTION NAME
4-C03	6100	HEATER
4-E03	6110	HEATER UNIT COMPONENTS
4-F03	6115	HEATER CONTROLS COMPONENTS
4-G03	6120	HEATER BLOWER COMPONENTS
4-I03	6130	AIR CONDITIONER
4-J03	6230	LIFT GATE MECHANISMS (COUPE)
4-M03	6300	WINDOW GLASSES (COUPE)
4-N03	6300A	WINDOW GLASSES (CONVERTIBLE)
4-C04	6330	SUNROOF (COUPE)
4-G04	6330A	SUNROOF (CONVERTIBLE)
4-M04	6600	SWITCHES & RELAYS (ENGINE)
4-G05	6610	DASHBOARD SWITCHES
4-H05	6611	COMBINATION SWITCH
4-I05	6612	CLUSTER SWITCH
4-L05	6615	POWER WINDOW SWITCHES
4-M05	6630	RELAYS & UNIT (BODY)
4-D06	6635	DOOR SWITCH & HORNS
4-E06	6640	AUTO CRUISE CONTROL SYSTEM
4-F06	6680	AUDIO SYSTEMS (RADIO & TAPE DECK) (COUPE)
4-K06	6680 A	AUDIO SYSTEMS (RADIO & TAPE DECK) (CONVERTIBLE)
4-M06	6682	AUDIO SYSTEMS (ANTENNA & SPEAKER) (COUPE)
4-D07	6682 A	AUDIO SYSTEMS (ANTENNA & SPEAKER) (CONVERTIBLE)
4-G07	6684	AUDIO SYSTEMS(NOISE SUPPRESSOR & EARTH CORD)
4-H07	6700	WIRING HARNESSES(FRONT & REAR)
4-N07	6701	WIRING HARNESSES(ENGINE & T/MISSION)
4-D08	6702	WIRING HARNESSES(DASHBOARD)
4-E08	6703	WIRING HARNESSES(DOOR,FLOOR/CEILING)
4-G08	6704	WIRING HARNESS CLAMPS
4-J08	6720	WINDSHIELD WASHER (1.5L & 2.5L)
4-L08	6720 A	WINDSHIELD WASHER (5.7L)
4-N08	6730	WINDSHIELD WIPERS
4-C09	6740	WIPER MOTOR COMPONENTS(FRONT)
4-D09	6750	WINDOW WIPER & WASHER (REAR)
4-G09	6760	WINDOW WIPER MOTOR COMPONENTS (REAR)
4-H09	6800	CEILING TRIMS (COUPE)
4-J09	6800A	CEILING TRIMS (CONVERTIBLE)
4-K09	6810	ROLLEBAR (CONVERTIBLE)
4-N09	6820	PILLAR TRIMS (COUPE)
4-F10	6820A	PILLAR TRIMS (CONVERTIBLE)
4-G10	6840	TRIMS & SCUFF PLATES (COUPE)
4-L10	6840A	TRIMS & SCUFF PLATES (CONVERTIBLE)
4-N10	6845	STRAGE BOX (COUPE) . (GXL,TURBO)
4-D11	6860	FLOOR MATS & PADS (COUPE)
4-K11	6860A	FLOOR MATS & PADS (CONVERTIBLE)
4-C12	6870	SERVICE TOOLS
4-D12	6900	VISORS,ASSIST HANDLES & MIRRORS (COUPE)
4-H12	6900A	VISORS,ASSIST HANDLES & MIRRORS (CONVERTIBLE)
4-K12	6930	CAUTION PLATES & LABELS
4-N12	7250	QUARTER WINDOW & TRIMS
4-E13	7800	SPOILERS & RELATED PARTS
4-C14	7900	ACCESSORIES

LO.NO	SEC.NO	SECTION NAME

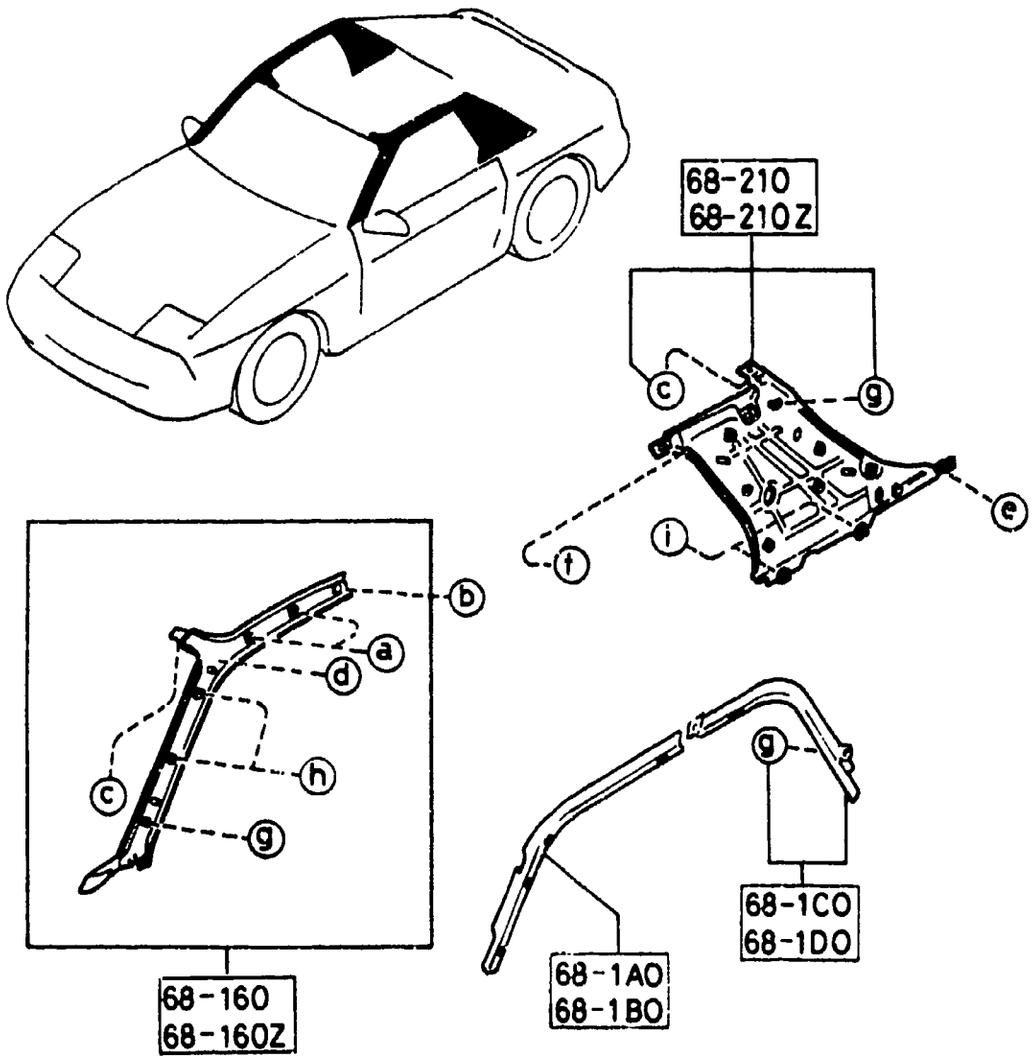

a	b		c	d	e
68-AD1	68-153A 68-018B		68-155	68-172H	68-719
f	g	h	i		
68-853A	68-865N	68-865S	69-885C		

AUFA02

PART NO.	QTY	MODEL/RESTRICTION	MODEL/RESTRICTION	MODEL/RESTRICTION	FROM-TO
68-155		GROMMET,SCREW			
FB01-68-155	4				
68-160		TRIM(R),'A'PILLAR			
FC01-68-160A A (FC01-68-160C)	1				-9113
02		BLACK			
19		RED			
48		BLUE			
FC01-68-160C	1				9113-
02		FD8 FE1 BLACK			
19		FE0 RED			
48		FD9 BLUE			
68-160Z		TRIM(L),'A'PILLAR			
FC01-68-170A A (FC01-68-170C)	1				-9113
02		BLACK			
19		RED			
48		BLUE			
FC01-68-170C	1				9113-
02		FD8 FE1 BLACK			
19		FE0 RED			
48		FD9 BLUE			
68-172H		FASTENER,CTR.P/UPP.			
B100-68-215A	2				
68-210		TRIM(R),'B'PILLAR			
FC01-68-190 A (FC01-68-190A)	1				-9113
02		FD8 BLACK			
19		FE0 RED			
48		FD9 BLUE			
FC20-68-190 A (FC20-68-190A)	1				-9113
02		FD8 BLACK			
19		FE0 RED			

9113 FC3####-700067

CAT. AUFA02-06

1992-05

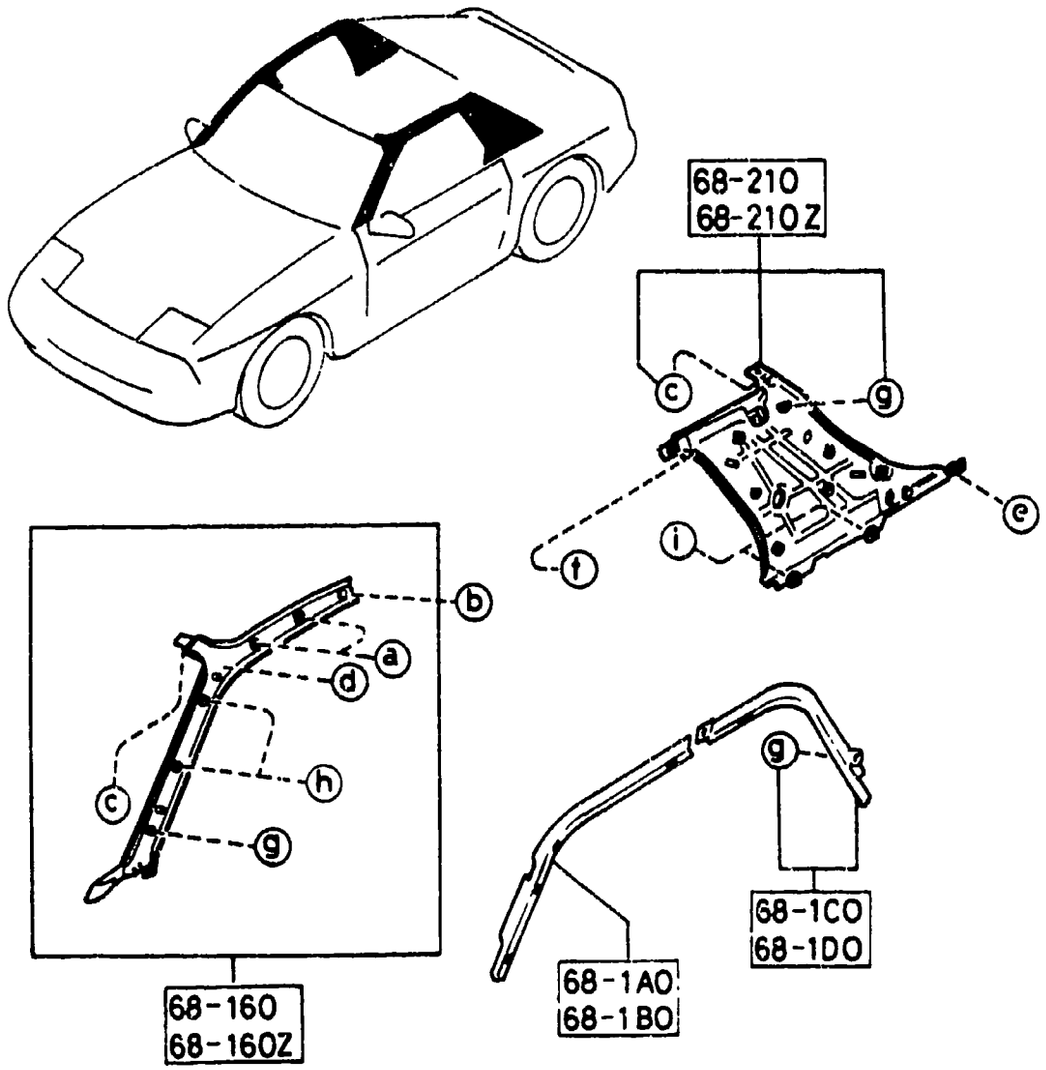

a	b	c	d	e
68-AD1	68-153A, 68-018B	68-155	68-172H	68-719

f	g	h	i
68-853A	68-865N	68-865S	69-885C

AUFA02

PART NO.	QTY	MODEL/RESTRICTION	MODEL/RESTRICTION	MODEL/RESTRICTION	FROM-TO
CONT'D					
48		FD9 BLUE			
FC01-68-190A	1	(2SEATER)			9113-
02		FD8 FE1 BLACK			
19		FE0 RED			
48		FD9 BLUE			
FC20-68-190A	1	(4SEATER)			9113-
02		FD8 FE1 BLACK			
19		FE0 RED			
48		FD9 BLUE			
+68-210Z+		TRIM(L),'B'PILLAR			
FC01-68-210A (FC01-68-210A)	1				-9113
02		FD8 BLACK			
19		FE0 RED			
48		FD9 BLUE			
FC20-68-210A (FC20-68-210A)	1				-9113
02		FD8 BLACK			
19		FE0 RED			
48		FD9 BLUE			
FC01-68-210A	1	(2SEATER)			9113-
02		FD8 FE1 BLACK			
19		FE0 RED			
48		FD9 BLUE			
FC20-68-210A	1	(4SEATER)			9113-
02		FD8 FE1 BLACK			
19		FE0 RED			
48		FD9 BLUE			
+68-719+		GROMMET,SCREW			
H001-68-719B	2				
+68-853A+		GROMMET,SCREW-T/SIDE TRIM			
FB01-68-853	2				
+68-865N+		CLIP,TRIM			

9113 FC3MMM-700067

CAT. AUFA02-06

1992-05

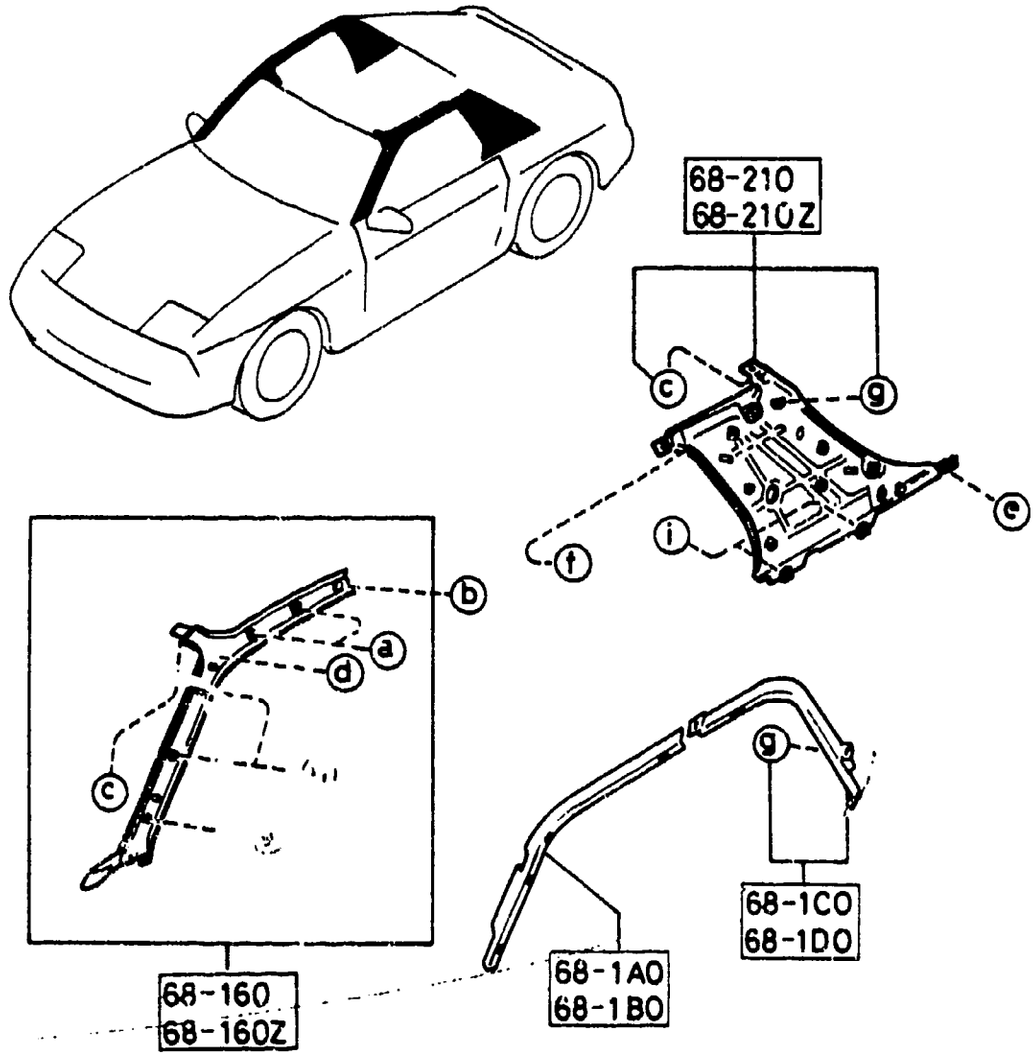

a	b		c	d	e
68-AD1	68-153A 68-018B		68-155	68-172H	68-719
f	g	h	i		
68-853A	68-865N	68-865S	69-885C		

PART NO.	QTY	MODEL/RESTRICTION	MODEL/RESTRICTION	MODEL/RESTRICTION	FROM-TO
CONT'D					
H002-68-665	18				
68-865S		CLIP,TRIM			
GJ12-68-865	4				
69-885C		FASTENER			
UB54-68-885	4				
00		FE0 FE1 FE1 BLACK			
48		FD9 BLUE			

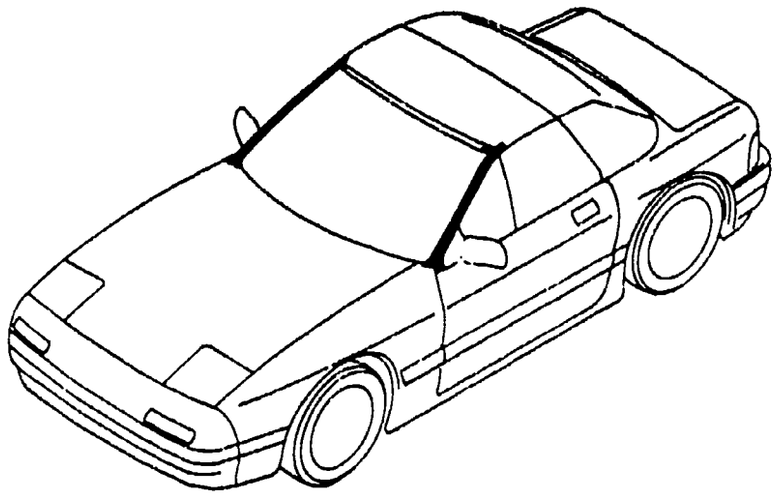

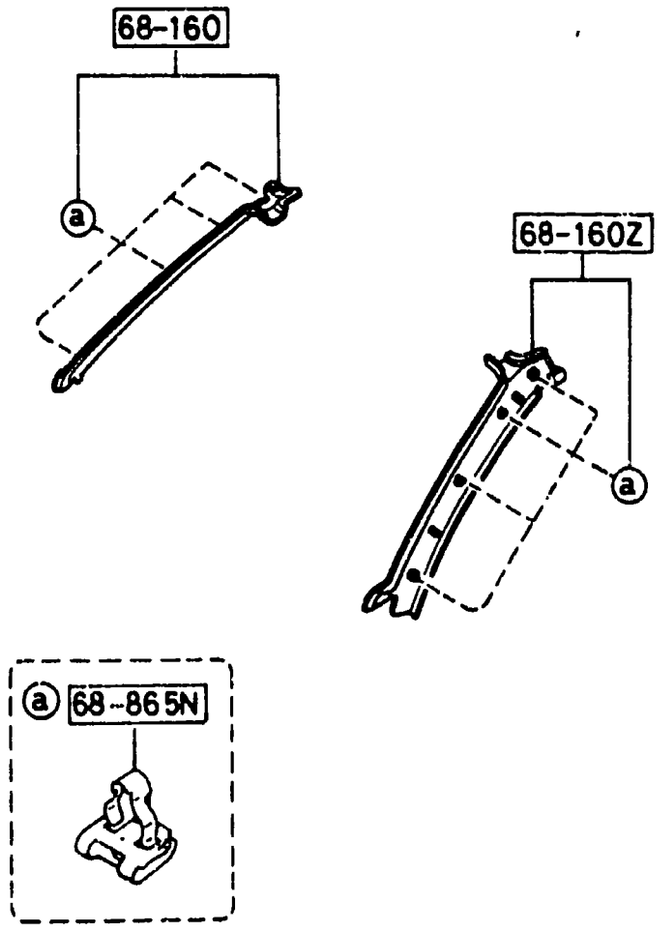

6820A -1 * PILLAR TRIMS
(CONVERTIBLE)

PART NO.	QTY	MODEL/RESTRICTION	MODEL/RESTRICTION	MODEL/RESTRICTION	FROM-TO
68-160		TRIM(R),'A'PILLAR			
FB67-68-160A	1				
02		FD8 FE1 BLACK			
48		FD9 BLUE			
68-160Z		TRIM(L),'A'PILLAR			
FB67-68-170A	1				
02		FD8 FE1 BLACK			
48		FD9 BLUE			
68-865N		CLIP,TRIM			
H002-68-865	8				

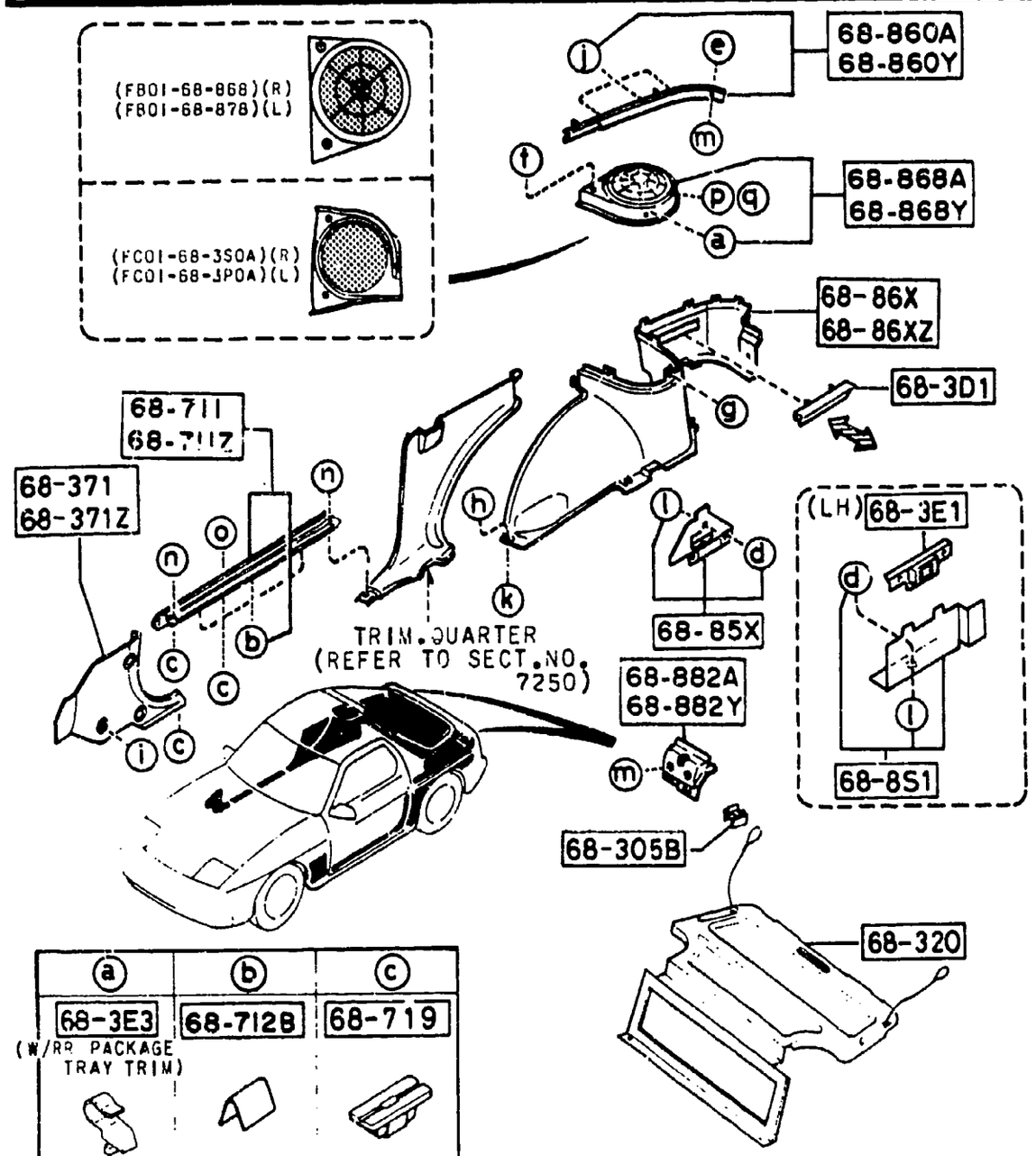

a	b	c
68-3E3 (W/RR PACKAGE TRAY TRIM)	68-712B	68-719

d	e	f	g	h	i	j
68-852	68-853A	68-865	68-865C	68-865D	68-865E	68-865N

k	l	m	n	o	p	q
68-866C	9957-50-600	9986-40-416B	9986-40-430B	9976-90-416B	9986-50-416B	9991-00-401

PART NO.	QTY	MODEL/RESTRICTION	MODEL/RESTRICTION	MODEL/RESTRICTION	FROM-TO
68-3D1		BRACKET(R),RR PKG			
FC01-68-3D1	1				
02		FD8 FD9 FE0 BLACK			
68-3E1		BRACKET(L),RR PKG			
FC01-68-3E1	1				
02		FD8 FD9 FE0 BLACK			
68-3E3		HOLDER,HINGE-GRILLE			
FC01-68-3E3A	2				
68-305B		HANGER,STRAP			
FC01-68-301A	2				
68-320		TRAY,REAR PACKAGE			
FC01-68-310C A (FC01-68-310D)	1				-9117
02		FD8 BLACK			
19		FD0 RED			
48		FD9 BLUE			
FC20-68-310A A (FC20-68-310B)	1				-9117
02		FD8 BLACK			
19		FD0 RED			
48		FD9 BLUE			
FC01-68-310D	1	(2SEATER)			9117-
02		FD8 BLACK			
19		FE0 RED			
48		FD9 BLUE			
FC20-68-310B	1	(4SEATER)			9117-
02		FD8 BLACK			
19		FE0 RED			
48		FD9 BLUE			
68-371		TRIM(R),FRONT SIDE			
FB01-68-370	1				
02		FD8 FE1 BLACK			
19		FE0 RED			

9117 FC3×××-700199

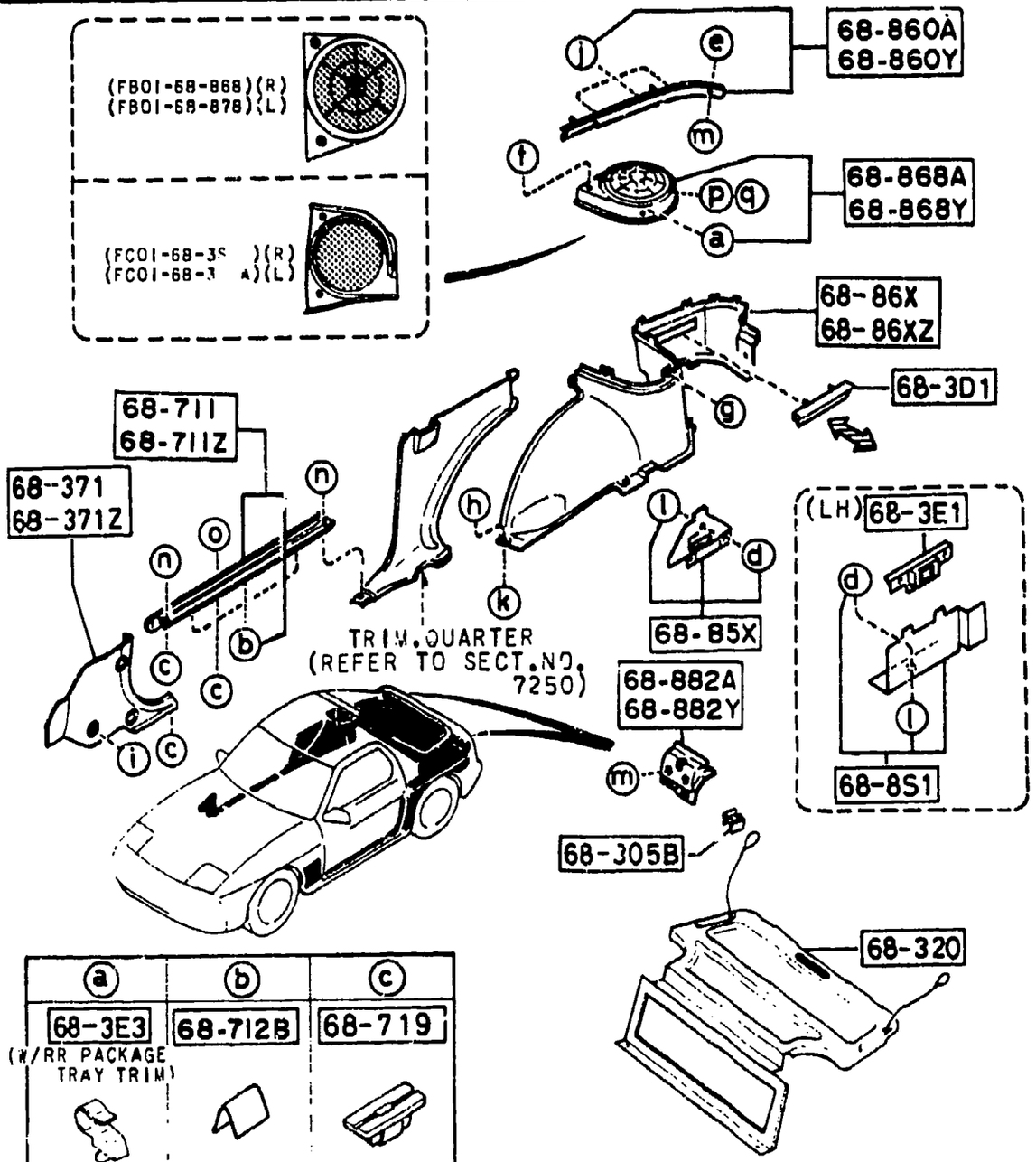

a	b	c
68-3E3 (W/RR PACKAGE TRAY TRIM)	68-712B	68-719

d	e	f	g	h	i	j
68-852	68-853A	68-865	68-865C	68-865D	68-865E	68-865N

k	l	m	n	o	p	q
68-866C	9257-50-600	9986-40-416B	9986-40-430B	9976-90-416B	9986-50-416B	9991-00-401

PART NO.	QTY	MODEL/RESTRICTION	MODEL/RESTRICTION	MODEL/RESTRICTION	FROM-TO
CONT'D					
48		FD9 BLUE			
68-371Z		TRIM(L),FRONT SIDE			
FB01-68-390	1				
02		FD8 FE1 BLACK			
19		FE0 RED			
48		FD9 BLUE			
68-711		PLATE(R),FRONT SCUFF			
FB01-68-710A	1				
02		FD8 FE1 BLACK			
19		FE0 RED			
48		FD9 BLUE			
68-711Z		PLATE(L),FRONT SCUFF			
FB01-68-720A	1				
02		FD8 FE1 BLACK			
19		FE0 RED			
48		FD9 BLUE			
68-712B		CLIP			
B003-68-712	2				
68-719		GROMMET,SCREW			
H001-68-719B	10				
68-8S1		COVER,JACK			
FC01-68-8S0	1				
02		FD8 BLACK			
19		FE0 RED			
48		FD9 BLUE			
68-85X		LID,SIDE-TRUNK ROOM			
FB01-68-85X	1				
68-852		FASTENER,TURN-SIDE LID			
FB01-68-852	3				

4-H10

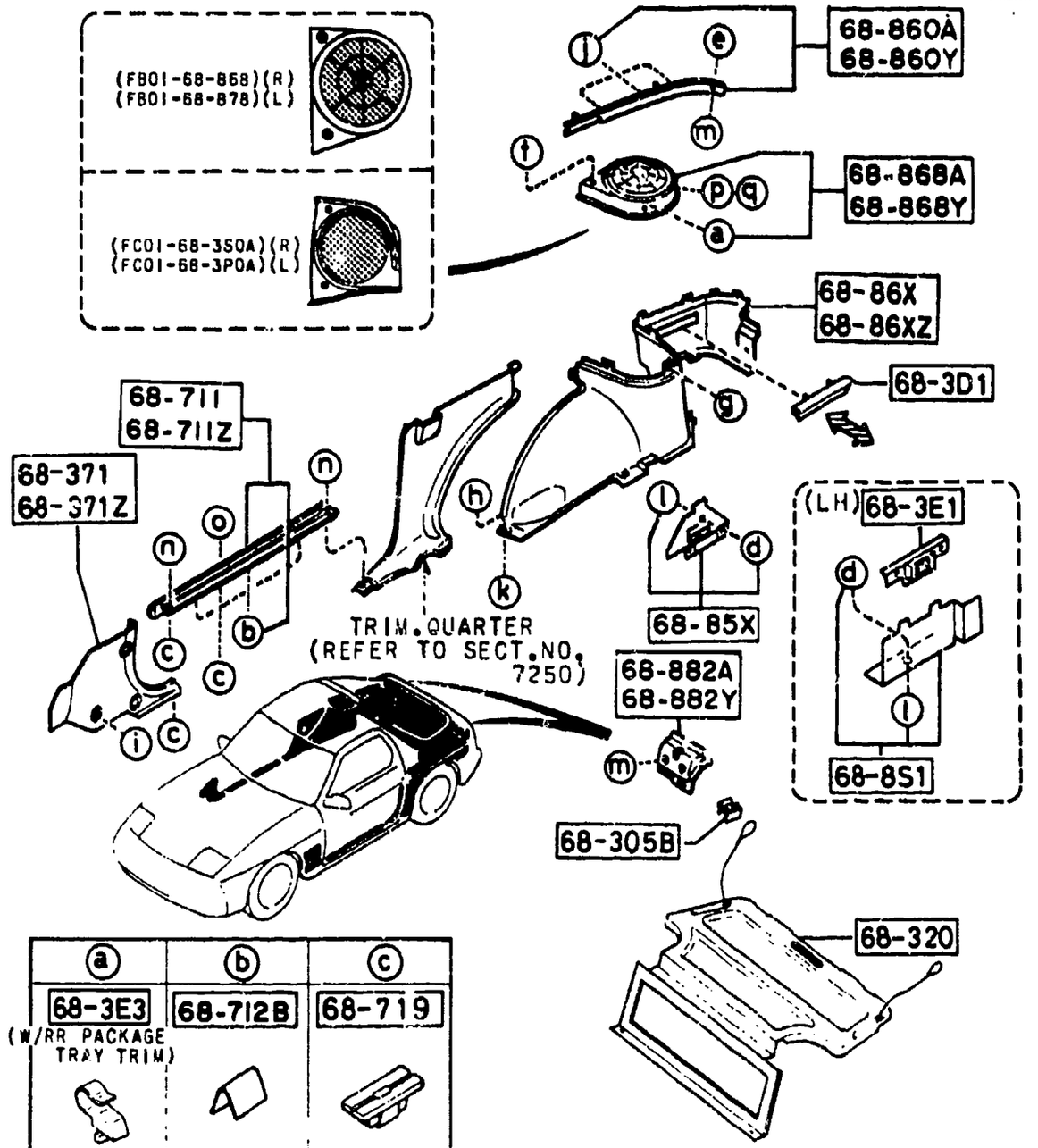

a	b	c
68-3E3 (W/RR PACKAGE TRAY TRIM)	68-712B	68-719

d	e	f	g	h	i	j
FA3-852	68-853A	68-865	68-865C	68-865D	68-865E	68-865N

k	l	m	n	o	p	q
68-866C	9957-80-600	9986-40-416B	9986-40-430B	9976-90-416B	9986-50-416B	9991-00-401

AUFA02

PART NO.	QTY	MODEL/RESTRICTION	MODEL/RESTRICTION	MODEL/RESTRICTION	FROM-TO
68-853A		GROMMET,SCREW-T/SIDE TRIM			
FB02-68-853	2				
68-86X		TRIM(R),TRUNK SIDE-LOWER			
FC01-68-85Y	1	GTU, GTUS, (W/O SILENCER PAD) (2SEATER)			
02		FD8 BLACK			
19		FE0 RED			
48		FD9 BLUE			
FC04-68-85Y	1	GXL, TURBO, (W/SILENCER PAD) (2SEATER)			
02		FD8 BLACK			
19		FE0 RED			
48		FD9 BLUE			
FC22-68-85Y	1	(4SEATER)			
02		FD8 BLACK			
19		FE0 RED			
48		FD9 BLUE			
68-86XZ		TRIM(L),TRUNK SIDE-LOWER			
FC01-68-87Y	1	GTU, GTUS, (W/O SILENCER PAD) (2SEATER)			
02		FD8 BLACK			
19		FE0 RED			
48		FD9 BLUE			
FC04-68-87Y	1	GXL, TURBO, (W/SILENCER PAD) (2SEATER)			
02		FD8 BLACK			
19		FE0 RED			
48		FD9 BLUE			
FC22-68-87Y	1	(4SEATER)			
02		FD8 BLACK			
19		FE0 RED			
48		FD9 BLUE			

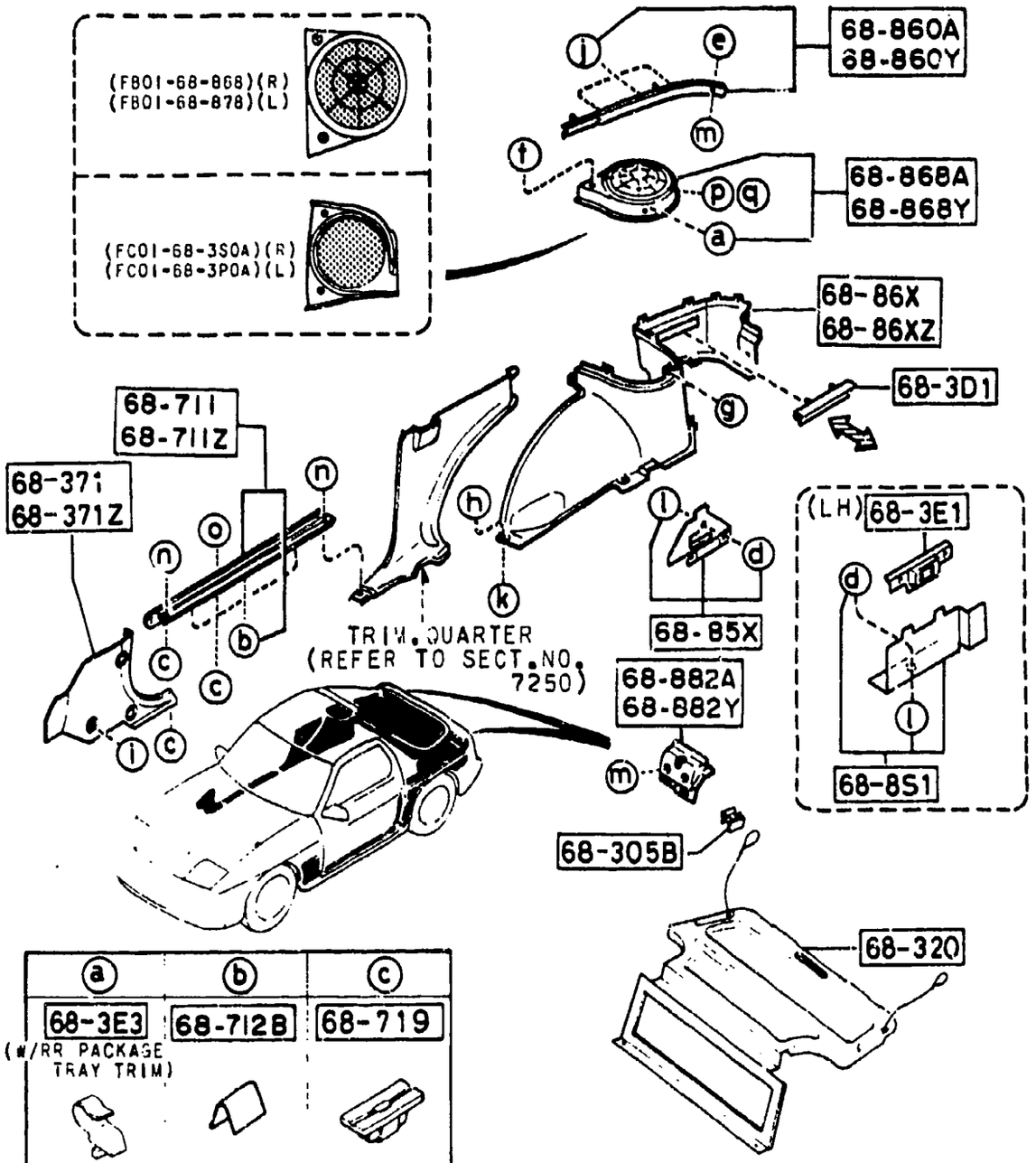

a	b	c
68-3E3 (W/RR PACKAGE TRAY TRIM)	68-712B	68-719

d	e	f	g	h	i	j
68-852	68-853A	68-865	68-865C	68-865D	68-865E	68-865N

k	l	m	n	o	p	q
68-866C	9957-50-600	9986-40-416B	9986-40-430B	9976-90-416B	9986-50-416B	9991-00-401

AUFA02

6840 -4 TRIMS & SCUFF PLATES
(COUPE)

PART NO.	QTY	MODEL/RESTRICTION	MODEL/RESTRICTION	MODEL/RESTRICTION	FROM-TO
+68-860A+		TRIM(R),TRUNK SIDE-UPPER			
FB01-68-860	1				
02		FD8 FE1 BLACK			
19		FE0 RED			
48		FD9 BLUE			
+68-860Y+		TRIM(L),TRUNK SIDE-UPPER			
FB01-68-870	1				
02		FD8 FE1 BLACK			
19		FE0 RED			
48		FD9 BLUE			
+68-865+		FASTENER			
B040-68-865A	4				
00		FD8 BLACK			
19		FE0 RED			
48		FD9 BLUE			
+68-865C+		FASTENER			
G032-68-865A	16				
00		FD8 FE1 BLACK			
+68-865D+		FASTENER			
S083-68-865A	7				
00		FD8 FE1 BLACK			
+68-865E+		FASTENER			
S049-68-865	6				
00		FD8 FD9 FE0 FE1 BLACK			
+68-865N+		CLIP,TRIM			
H002-68-865	6				
+68-866C+		FASTENER,SEAL			
B235-68-865A	7				-9A01
B235-68-865A	5				9A01-

9A01 FC3***-803554

CAT. AUFA02-06

1992-05

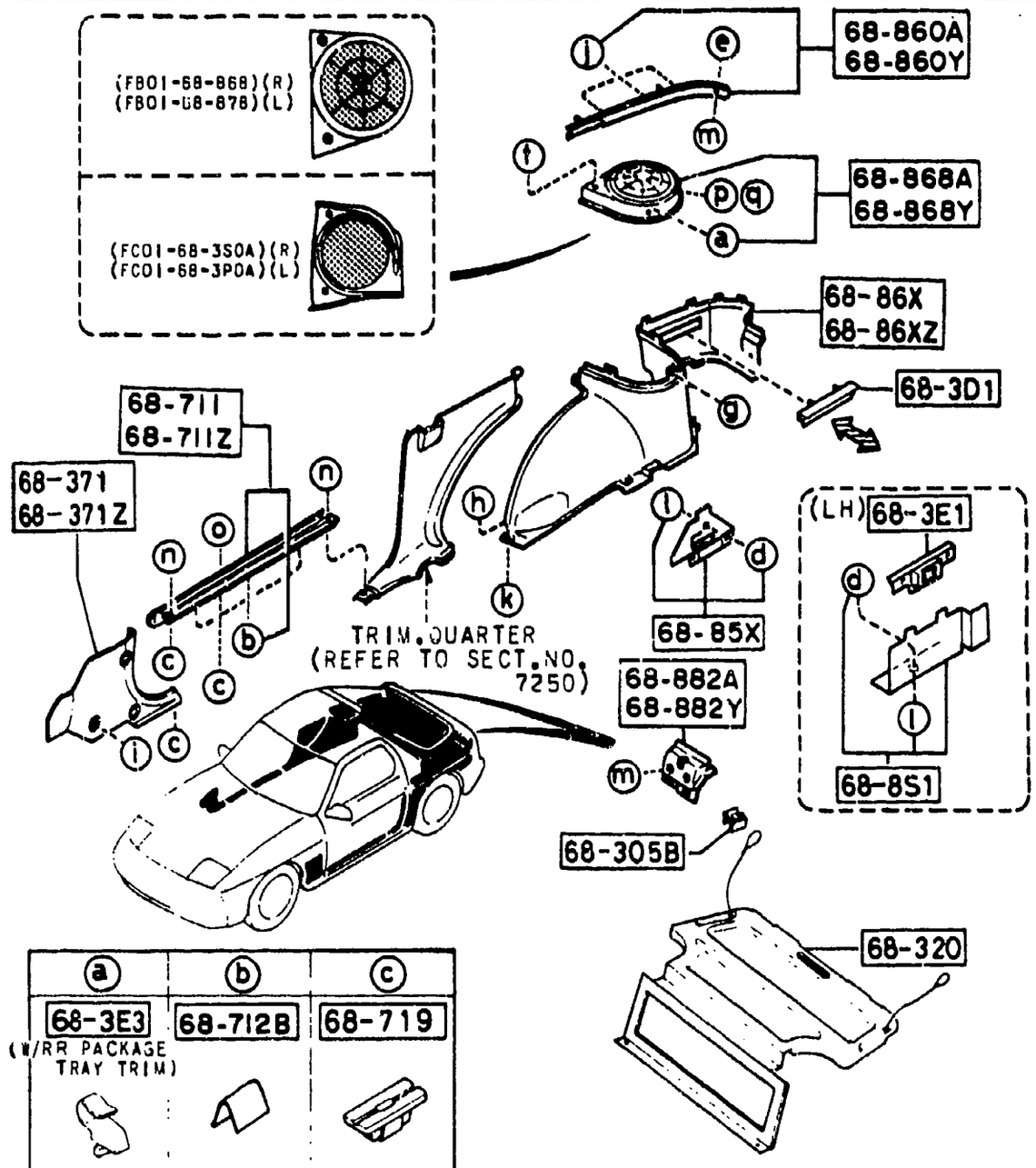

a	b	c
68-3E3 (W/RR PACKAGE TRAY TRIM)	68-712B	68-719

d	e	f	g	h	i	j
68-852	68-853A	68-865	68-865C	68-865D	68-865E	68-865N

k	l	m	n	o	p	q
68-866C	9957-50-600	9986-40-416B	9986-40-430B	9976-90-416B	9986-50-419B	9981-00-401

6840 -5 ✱ TRIMS & SCUFF PLATES (COUPE)

PART NO.	QTY	MODEL/RESTRICTION	MODEL/RESTRICTION	MODEL/RESTRICTION	FROM-TO
68-868A		GRILLE(R),SPEAKER-T/TRIM			
FC01-68-3S0A	1	GXL, TURBO, (W/RR PACKAGE TRAY TRIM)			
02		FD8 BLACK			
19		FE0 RED			
48		FD9 BLUE			
FB01-68-868	1	GTU, GTUS, (W/O RR PACKAGE TRAY TRIM) (2SEATER)			
02		FD8 BLACK			
19		FE0 RED			
48		FD9 BLUE/BLACK			
68-868Y		GRILLE(L),SPEAKER-T/TRIM			
FC01-68-3P0A	1	GXL, TURBO, (W/RR PACKAGE TRAY TRIM)			
02		FD8 BLACK			
19		FE0 RED			
48		FD9 BLUE			
FB01-68-878	1	GTU, GTUS, (W/O RR PACKAGE TRAY TRIM) (2SEATER)			
02		FD8 BLACK			
19		FE0 RED			
48		FD9 BLUE/BLACK			
68-882A		COVER(R),T/END TRIM			
FB01-68-894B	1				
02		FD8 FE1 BLACK			
19		FE0 RED			
48		FD9 BLUE			
68-882Y		COVER(L),T/END TRIM			
FB01-68-895B	1				
02		FD8 FE1 BLACK			
19		FE0 RED			
48		FD9 BLUE			

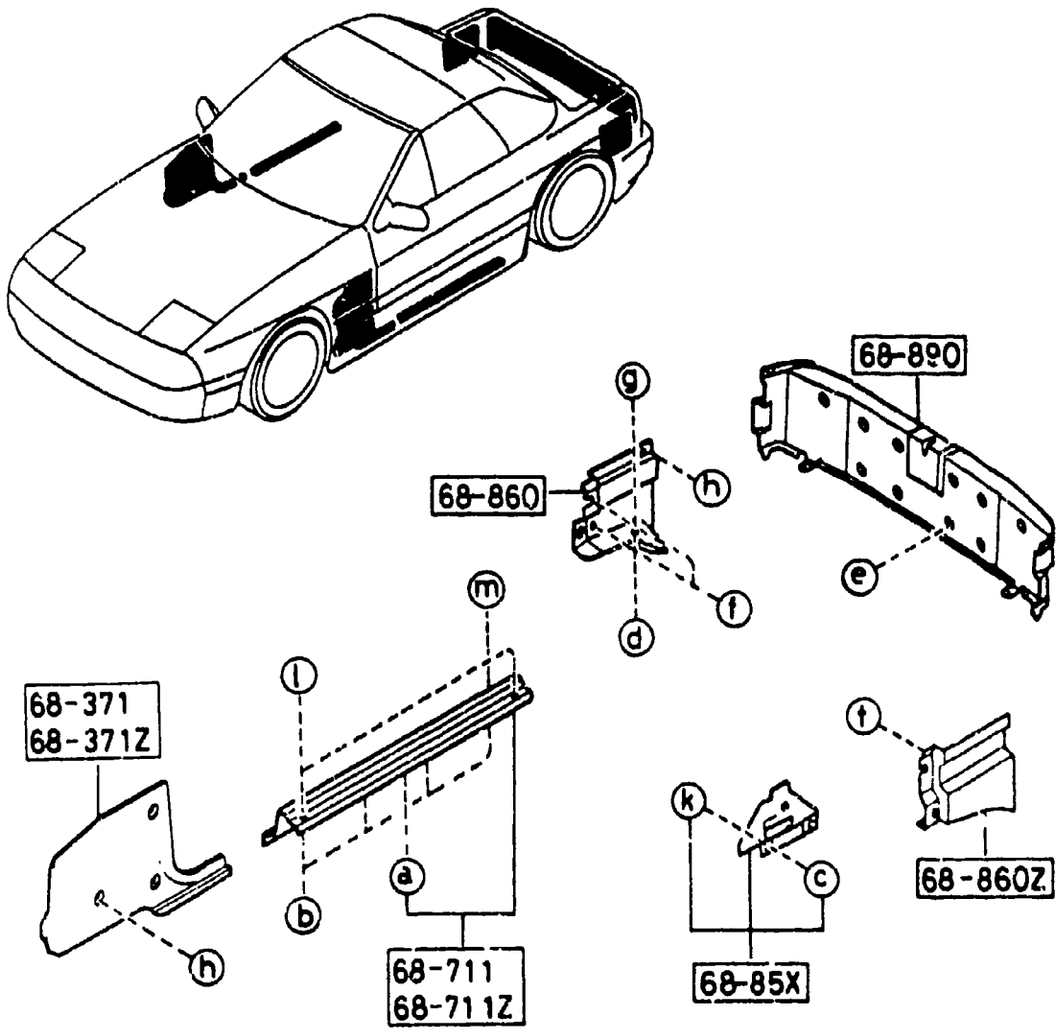

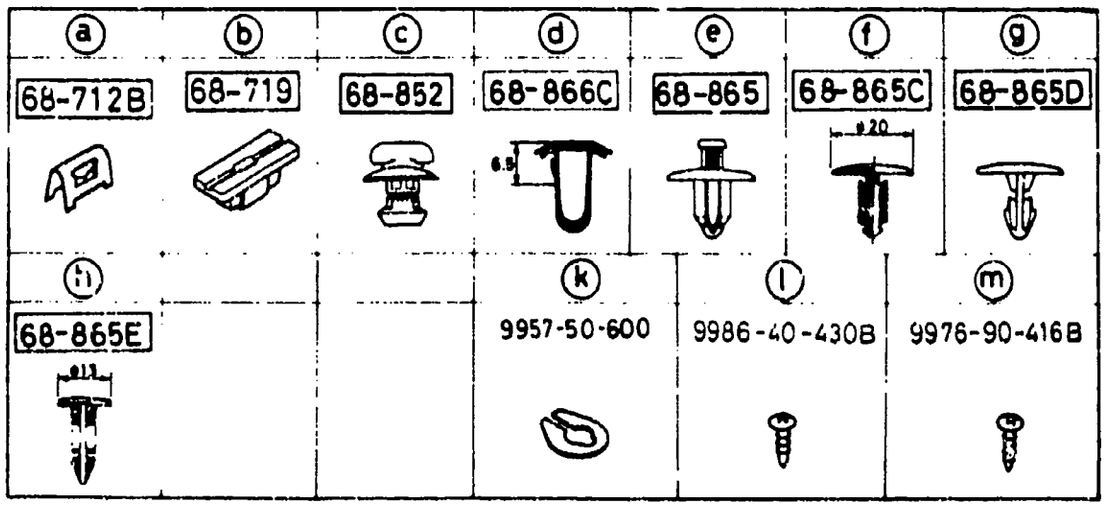

PART NO.	QTY	MODEL/RESTRICTION	MODEL/RESTRICTION	MODEL/RESTRICTION	FROM-TO
68-371		TRIM(R),FRONT SIDE			
FB67-68-370	1				
02		FD8 FE1 BLACK			
48		FD9 BLUE			
68-371Z		TRIM(L),FRONT SIDE			
FB67-68-390	1				
02		FD8 FE1 BLACK			
48		FD9 BLUE			
68-711		PLATE(R),FRONT SCUFF			
FB67-68-710	1				
02		FD8 FE1 BLACK			
48		FD9 BLUE			
68-711Z		PLATE(L),FRONT SCUFF			
FB67-68-720	1				
02		FD8 FE1 BLACK			
48		FD9 BLUE			
68-712B		CLIP			
B235-68-712	2				
68-719		GROMMET,SCREW			
B235-68-719	8				
68-85X		LID,SIDE-TRUNK ROOM			
FB01-68-85X	1				
68-852		FASTENER,TURN-SIDE LID			
FB01-68-852	2				
68-860		TRIM(R),TRUNK SIDE			
FB67-68-861	1				
07		FD8 FD9 FE1 DARK GRAY			
68-860Z		TRIM(L),TRUNK SIDE			
FB67-68-871	1				

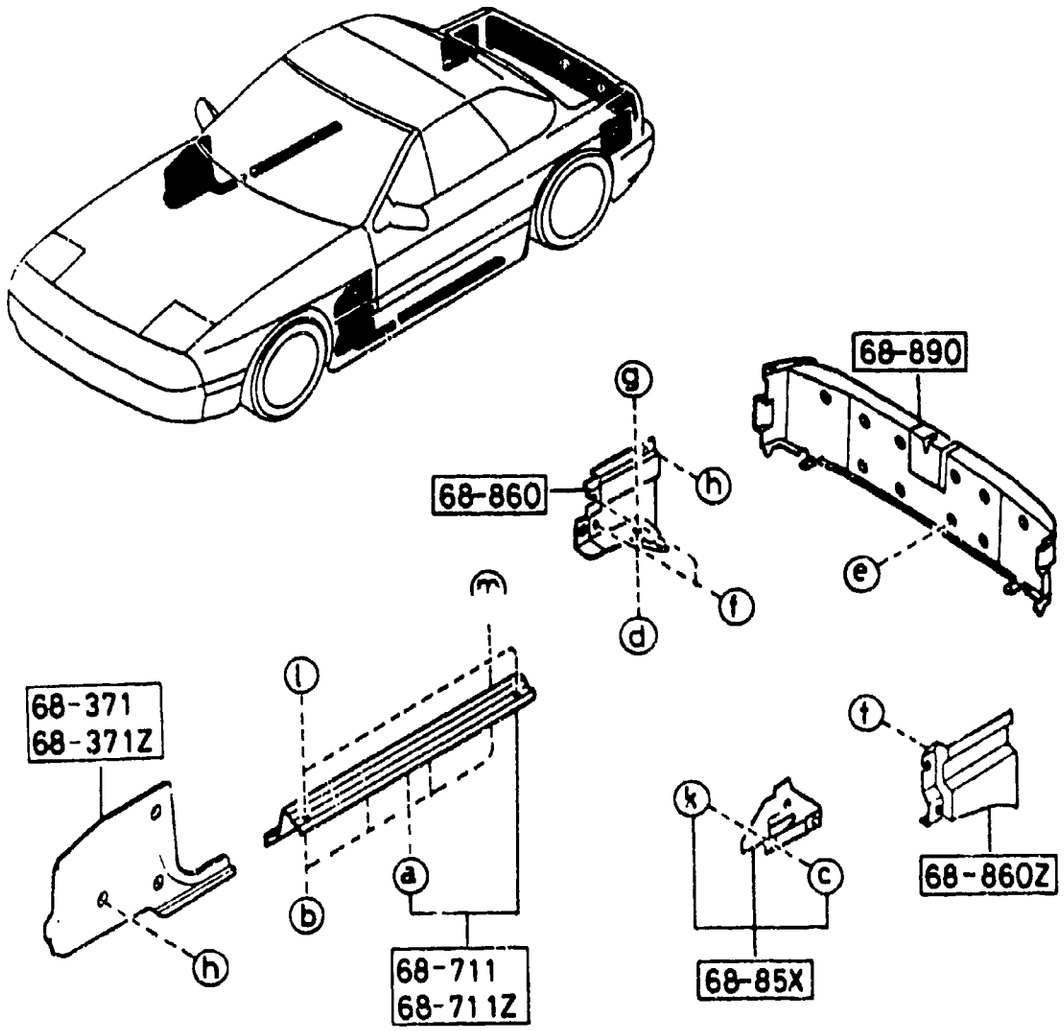

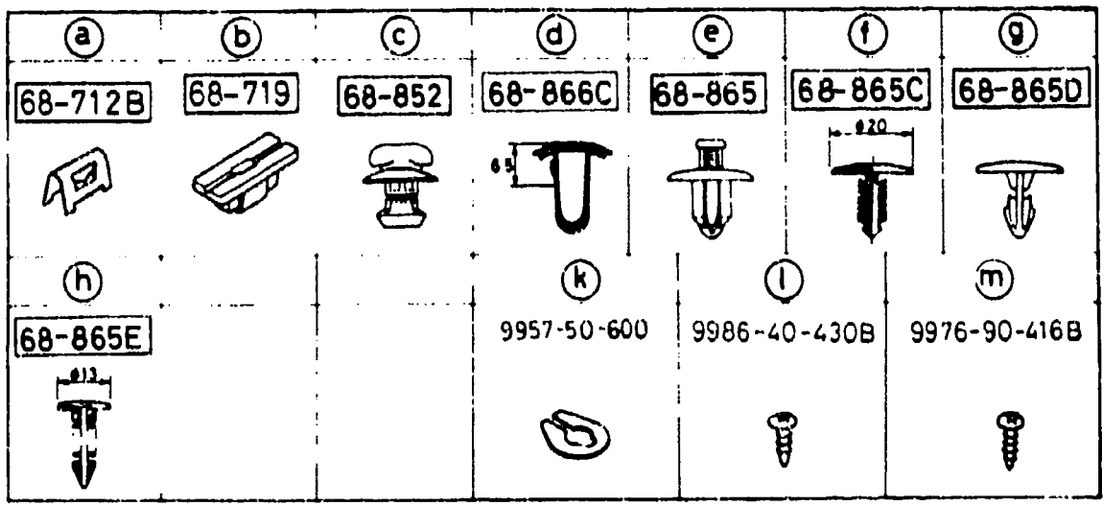

PART NO.	QTY	MODEL/RESTRICTION	MODEL/RESTRICTION	MODEL/RESTRICTION	FROM-TO
CONT'D					
07		FD8 FD9 FE1 DARK GRAY			
68-865		FASTENER			
FB67-68-865	13				
09		FD8 FD9 FE1 DARK GRAY			
68-865C		FASTENER			
G032-68-865A	7				
09		FE0 FE1 DARK GRAY			
48		FD9 BLUE			
68-865D		FASTENER			
S083-68-865A	1				
09		FE0 FE1 DARK GRAY			
48		FD9 BLUE			
68-865E		FASTENER			
S049-68-865	6				
00		FE0 FE1 BLACK			
48		FD9 BLUE			
68-866C		FASTENER,SEAL			
B235-68-865A	1				
68-890		TRIM,TRUNK END			
FB67-68-891B	1				
07		FD8 FD9 FE1 DARK GRAY			

6845 STRAGE BOX
(COUPE)
(GXL,TURBO)

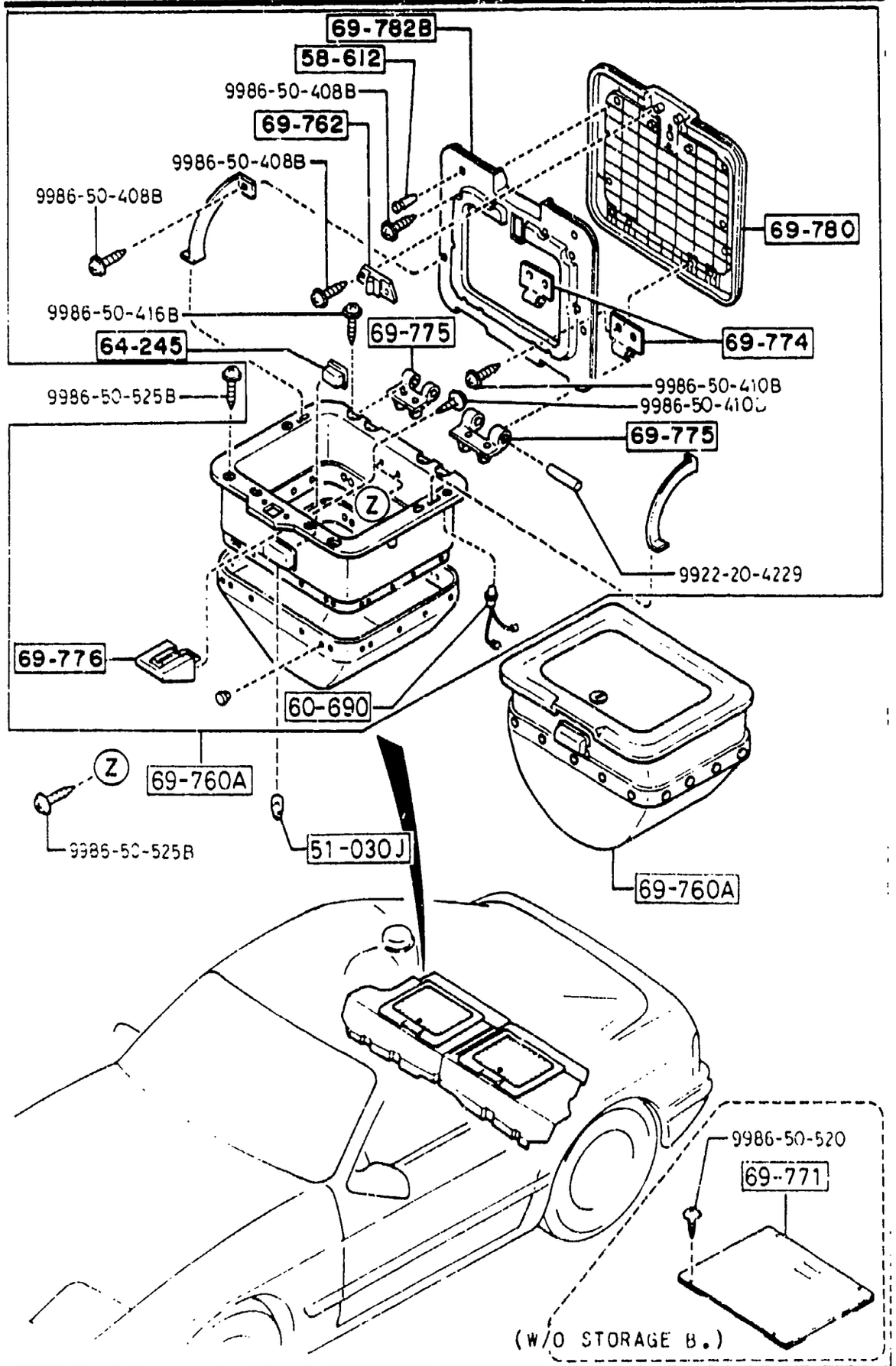

6845 -1 STRAGE BOX
(COUPE)
(GXL,TURBO)

PART NO.	QTY	MODEL/RESTRICTION	MODEL/RESTRICTION	MODEL/RESTRICTION	FROM-TO
51-030J		BULB			
99701-6030	2	12V 3.4W			
58-612		CUSHION,RUBBER			
0259-58-612	4				
60-690		SWITCH,GLOVE TRAY			
G030-66-540B	2				
64-245		LENS,SIDE WALL			
H002-64-245	2				
69-760A		BOX,STORAGE			
FC01-69-760	2				
02		FD8 BLACK			
19		FE0 RED			
48		FD9 BLUE			
69-762		PLATE,LOCK			
FB01-69-762	2				
02		FD8 BLACK			
19		FE0 RED			
48		FD9 BLUE			
69-771		COVER,HOLE-STORAGE BOX			
FB02-69-771	2	(W/O STRAGE BOX)			
69-774		HINGE NO.1,STORAGE BOX			
FB01-69-774	4				
07		DARK GRAY			
10		RED			
48		BLUE			
69-775		HINGE NO.2,STORAGE BOX			
FB01-69-775	4				
07		DARK GRAY			
10		RED			
48		BLUE			

LO.NO	SEC.NO	SECTION NAME
4-C03	6100	HEATER
4-E03	6110	HEATEK UNIT COMPONENTS
4-F03	6115	HEATER CONTROLS COMPONENTS
4-G03	6120	HEATER BLOWER COMPONENTS
4-I03	6130	AIR CONDITIONER
4-J03	6230	LIFT GATE MECHANISMS (COUPE)
4-M03	6300	WINDOW GLASSES (COUPE)
4-N03	6300A	WINDOW GLASSES (CONVERTIBLE)
4-C04	6330	SUNROOF (COUPE)
4-G04	6330A	SUNROOF (CONVERTIBLE)
4-M04	6600	SWITCHES & RELAYS (ENGINE)
4-G05	6610	DASHBOARD SWITCHES
4-H05	6611	COMBINATION SWITCH
4-I05	6612	CLUSTER SWITCH
4-L05	6615	POWER WINDOW SWITCHES
4-M05	6630	RELAYS & UNIT (BODY)
4-D06	6635	DOOR SWITCH & HORNS
4-E06	6640	AUTO CRUISE CONTROL SYSTEM
4-F06	6680	AUDIO SYSTEMS (RADIO & TAPE DECK) (COUPE)
4-K06	6680 A	AUDIO SYSTEMS (RADIO & TAPE DECK) (CONVERTIBLE)
4-M06	6682	AUDIO SYSTEMS (ANTENNA & SPEAKER) (COUPE)
4-D07	6682 A	AUDIO SYSTEMS (ANTENNA & SPEAKER) (CONVERTIBLE)
4-G07	6684	AUDIO SYSTEMS(NOISE SUPPRESSOR & EARTH CORD)
4-H07	6700	WIRING HARNESSES(FRONT & REAR)
4-N07	6701	WIRING HARNESSES(ENGINE & T/MISSION)
4-D08	6702	WIRING HARNESSES(DASHBOARD)
4-E08	6703	WIRING HARNESSES(DOOR,FLOOR/CEILING)
4-G08	6704	WIRING HARNESS CLAMPS
4-J08	6720	WINDSHIELD WASHER (1.5L & 2.5L)
4-L03	6720 A	WINDSHIELD WASHER (5.7L)
4-N08	6730	WINDSHIELD WIPERS
4-C09	6740	WIPER MOTOR COMPONENTS(FRONT)
4-D09	6750	WINDOW WIPER & WASHER (REAR)
4-G09	6760	WINDOW WIPER MOTOR COMPONENTS (REAR)
4-H09	6800	CEILING TRIMS (COUPE)
4-J09	6800A	CEILING TRIMS (CONVERTIBLE)
4-K09	6810	ROLLEBAR (CONVERTIBLE)
4-N09	6820	PILLAR TRIMS (COUPE)
4-F10	6820A	PILLAR TRIMS (CONVERTIBLE)
4-G10	6840	TRIMS & SCUFF PLATES (COUPE)
4-L10	6840A	TRIMS & SCUFF PLATES (CONVERTIBLE)
4-N10	6845	STRAGE BOX (COUPE) (GXL,TURBO)
4-D11	6860	FLOOR MATS & PADS (COUPE)
4-K11	6860A	FLOOR MATS & PADS (CONVERTIBLE)
4-C12	6870	SERVICE TOOLS
4-D12	6900	VISORS,ASSIST HANDLES & MIRRORS (COUPE)
4-H12	6900A	VISORS,ASSIST HANDLES & MIRRORS (CONVERTIBLE)
4-K12	6930	CAUTION PLATES & LABELS
4-N12	7250	QUARTER WINDOW & TRIMS
4-E13	7800	SPOILERS & RELATED PARTS
4-C14	7900	ACCESSORIES

6845 STRAGE BOX
(COUPE)
(GXL,TURBO)

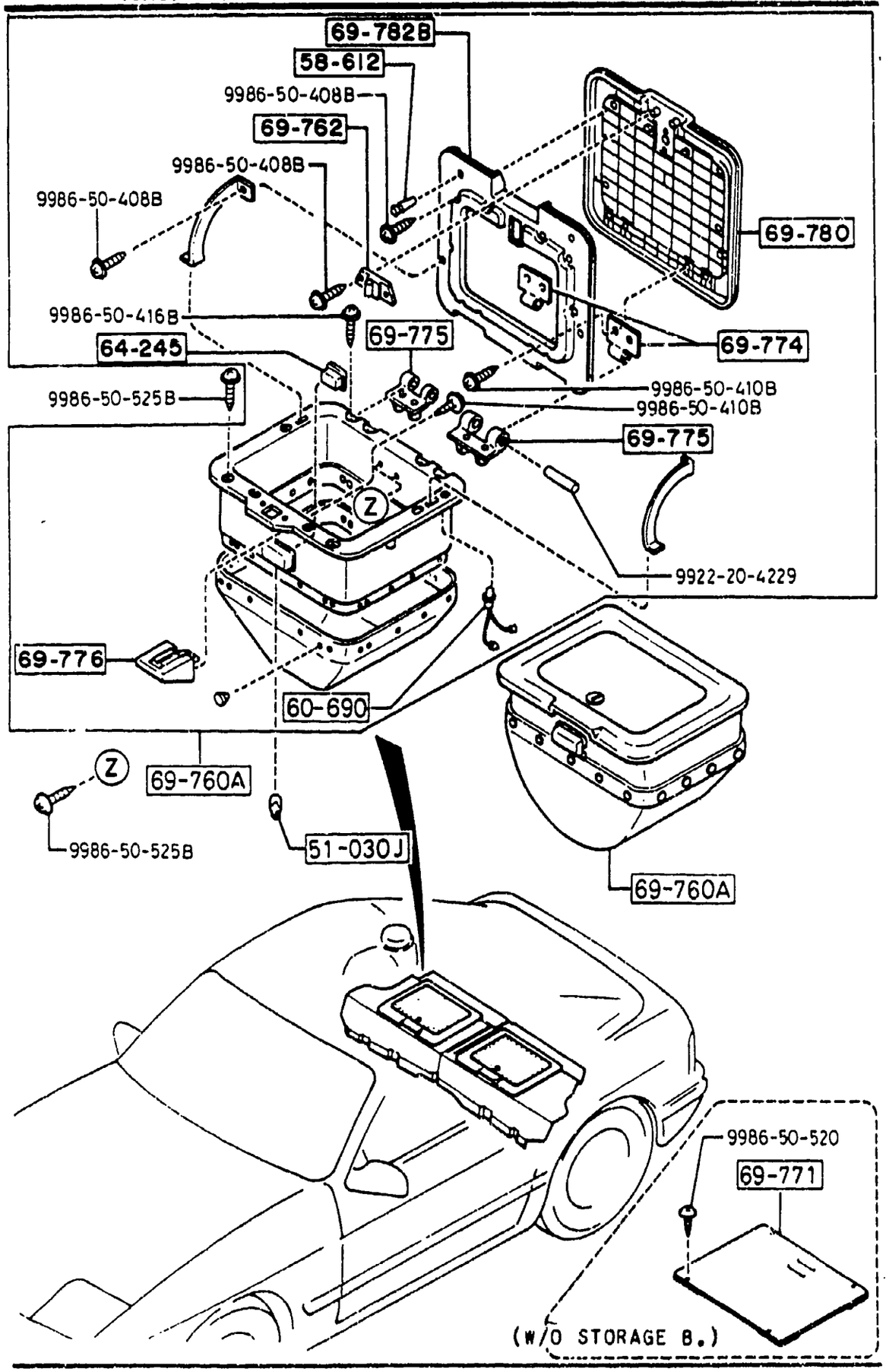

AUFA02

6845 -2 * STRAGE BOX
(COUPE)
(GXL,TURBO)

PART NO.	QTY	MODEL/RESTRICTION	MODEL/RESTRICTION	MODEL/RESTRICTION	FROM-TO
69-776		STRIKER,STORAGE BOX			
FB01-69-776	2				
69-780		LID,OUTER-STORAGE BOX			
FB01-69-780	2				
02		FD8 BLACK			
19		FE0 RED			
48		FD9 BLUE			
69-782B		LID,INNER-STORAGE BOX			
FB01-69-782	2				
02		FD8 BLACK			
19		FE0 RED			
48		FD9 BLUE			

CAT. AUFA02-06

1992-05

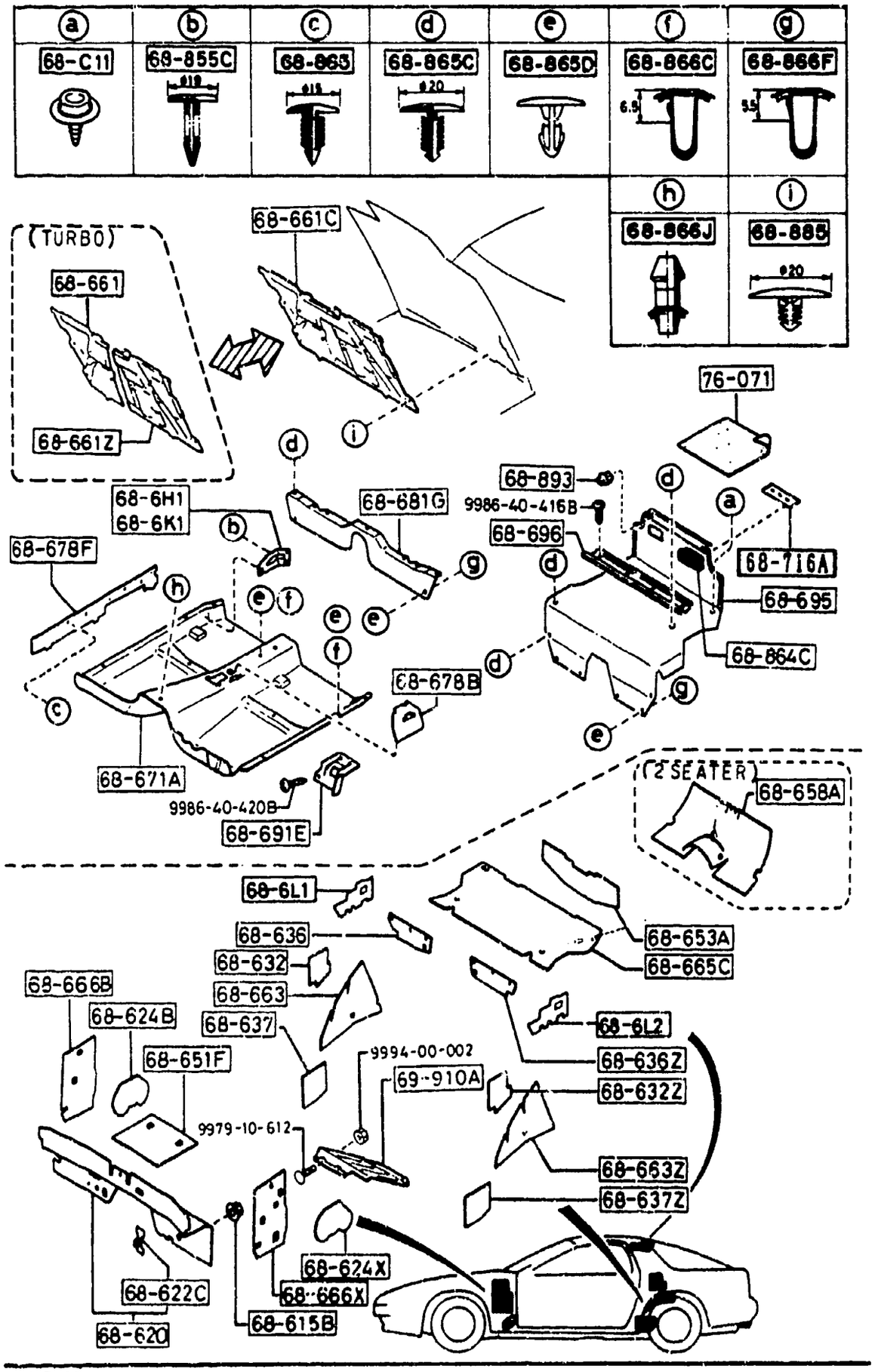

AUFA02

6860 -1 FLOOR MATS & PADS
(COUPE)

PART NO.	QTY	MODEL/RESTRICTION	MODEL/RESTRICTION	MODEL/RESTRICTION	FROM-TO
+----------+					
| 68-C11 |		HOOK,SCREW-TRUNK MAT			
+----------+					
FC01-68-C11A	3				-9113
A (FC01-68-C11B)					
FC01-68-C11B	3	(2SEATER)			9113-
+----------+					
| 68-6H1 |		COVER(R),LAP BELT			
+----------+					
FC01-68-6H1A	1				-9202
A (FC01-68-6H1B)					
02		FD8 BLACK			
19		FE0 RED			
48		FD9 BLUE			
FC01-68-6H1B	1				9202-
02		FD8 FE1 BLACK			
19		FE0 RED			
48		FD9 BLUE			
+----------+					
| 68-6K1 |		COVER(L),LAP BELT			
+----------+					
FC01-68-6K1A	1				-9202
A (FC01-68-6K1B)					
02		FD8 BLACK			
19		FE0 RED			
48		FD9 BLUE			
FC01-68-6K1B	1				9202-
02		FD8 FE1 BLACK			
19		FE0 RED			
48		FD9 BLUE			
+----------+					
| 68-6L1 |		COVER'A',HOLE			
+----------+					
FC01-68-6L1	1				
+----------+					
| 68-6L2 |		COVER'B',HOLE			
+----------+					
FC01-68-6L2	1				
+----------+					
| 68-615B |		NUT,FLANGE-CAP			
+----------+					
B100-68-615	13				
+----------+					
| 68-620 |		INSULATOR,DASHBOARD			
+----------+					
FB02-68-620A	1	GTU, GTUS, (W/O SILENCER PAD)			

9113 FC3MMM-700067
9202 FC3MMM-702073

CAT. AUFA02-06

1992-05

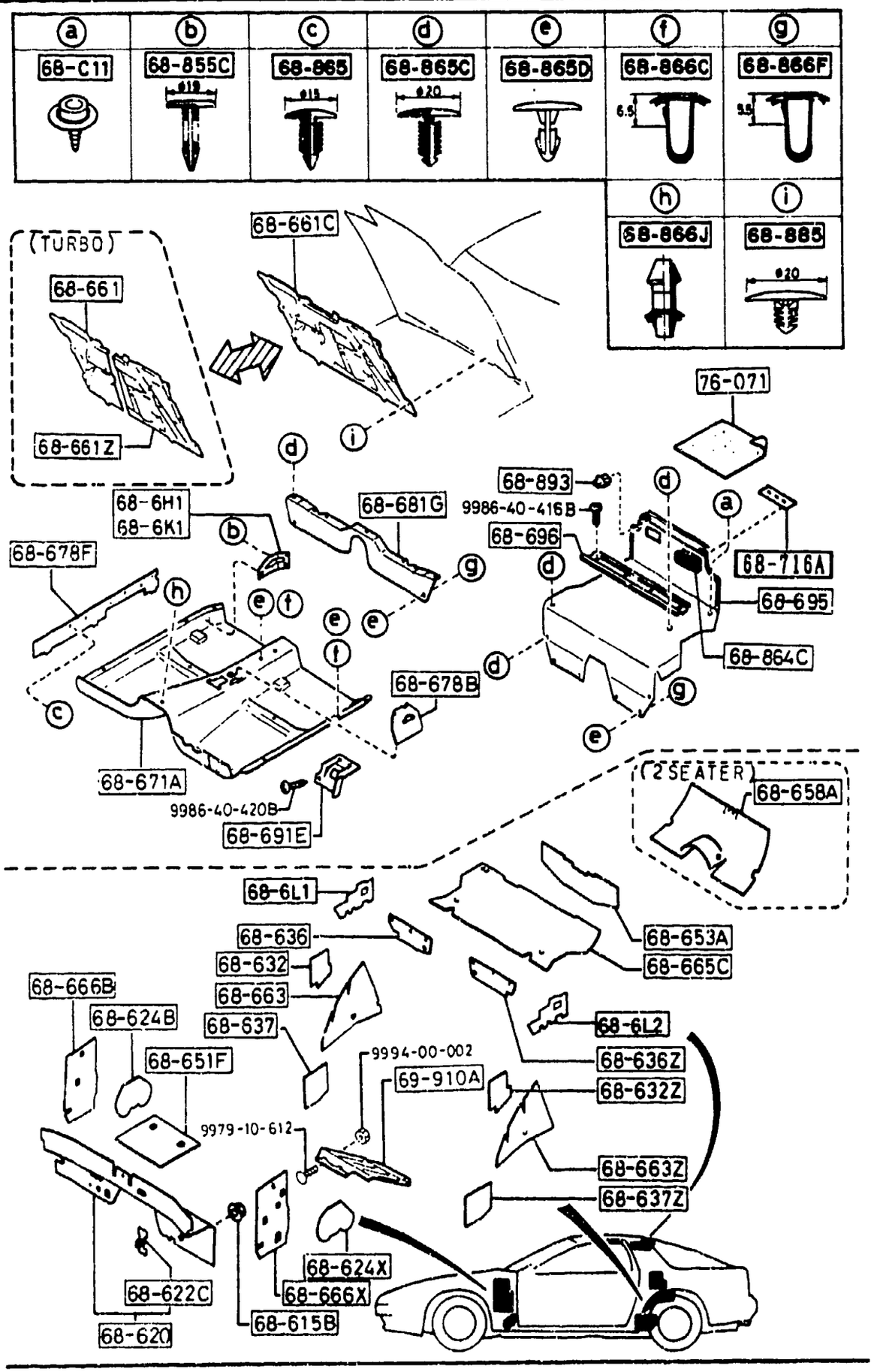

AUFA02

PART NO.	QTY	MODEL/RESTRICTION	MODEL/RESTRICTION	MODEL/RESTRICTION	FROM-TO
CONT'D FB04-68-620A	1	GXL, TURBO, (W/SILENCER PAD)			
+----------+ | 68-622C | +----------+ FB01-68-622	4	CLIP,DASHBOARD INSULATOR			
+----------+ | 68-624B | +----------+ FB01-68-624	1	COVER(R),HOLE-DASH.INSU.			
+----------+ | 68-624X | +----------+ FB01-68-625	1	COVER(L),HOLE-DASH.INSU.			
+----------+ | 68-632 | +----------+ FB01-68-632	1	COVER(R),RETRACTOR (2SEATER)			
FB25-68-632	1	(4SEATER)			
+----------+ | 68-632Z | +----------+ FB01-68-642	1	COVER(L),RETRACTOR-REAR (2SEATER)			
FB25-68-642	1	(4SEATER)			
+----------+ | 68-636 | +----------+ FB01-68-636A	1	INSULATOR(R),CROSS MEMBER			
+----------+ | 68-636Z | +----------+ FB01-68-646A	1	INSULATOR(L),CROSS MEMBER			
+----------+ | 68-637 | +----------+ FB01-68-637	1	COVER(R),RETRACTOR-FRONT			
+----------+ | 68-637Z | +----------+ FB01-68-647	1	COVER(L),RETRACTOR-FRONT			
+----------+ | 68-651F | +----------+ FB01-68-652	1	PAD,FRONT FLOOR			
+----------+ | 68-653A | +----------+ FB01-68-653	1	INSULATOR,SPARE TIRE			
+----------+ | 68-658A | +----------+ FB01-68-658	1	PAD,STRAGE BOX GTU, GTUS, (W/O SILENCER PAD) (2SEATER)			

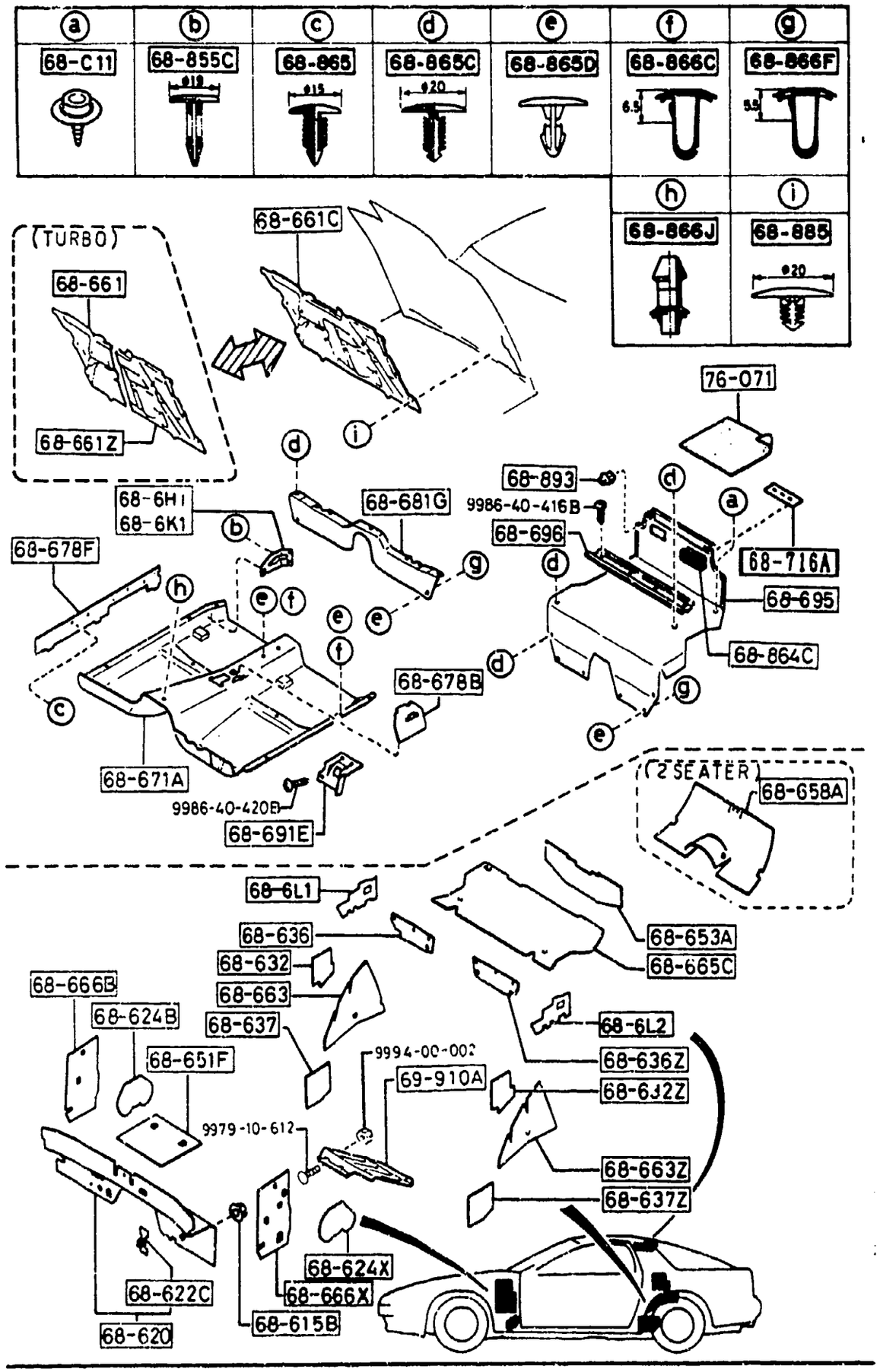

AUFA02

PART NO.	QTY	MODEL/RESTRICTION	MODEL/RESTRICTION	MODEL/RESTRICTION	FROM-TO
CONT'D					
FB03-68-658	1	GXL, TURBO, (W/SILENCER PAD) (2SEATER)			
68-661		INSULATOR(R),BONNET			
F046-68-661B	1	(TURBO)			
68-661C		INSULATOR,BONNET			
FB03-68-661A	1	(W/O TURBO)			
68-661Z		INSULATOR(L),BONNET			
F046-68-662A	1	(TURBO)			
68-663		INSULATOR(R),TIRE HOUSE			
FB01-68-663	1	GTU, GTUS, (W/O SILENCER PAD)			
FB03-68-663	1	GXL, TURBO, (W/SILENCER PAD)			
68-663Z		INSULATOR(L),TIRE HOUSE			
FB01-68-664	1	GTU, GTUS, (W/O SILENCER PAD)			
FB03-68-664	1	GXL, TURBO, (W/SILENCER PAD)			
68-665C		PAD,TRUNK			
FC01-68-814	1	GTU, GTUS, (W/O SILENCER PAD)			
FC02-68-814	1	GXL, TURBO, (W/SILENCER PAD)			
68-666B		PAD(R),SIDE-DASHBOARD			
FB03-68-666A	1				
68-666X		PAD(L),SIDE-DASHBOARD			
FB03-68-667A	1				
68-671A		MAT,FLOOR			
FC02-68-671A (FC02-68-671A)	1				-9113
02		FD8 BLACK			
19		FE0 RED			
48		FD9 BLUE			

9113 FC3####-700067

CAT. AUFA02-06

1992-05

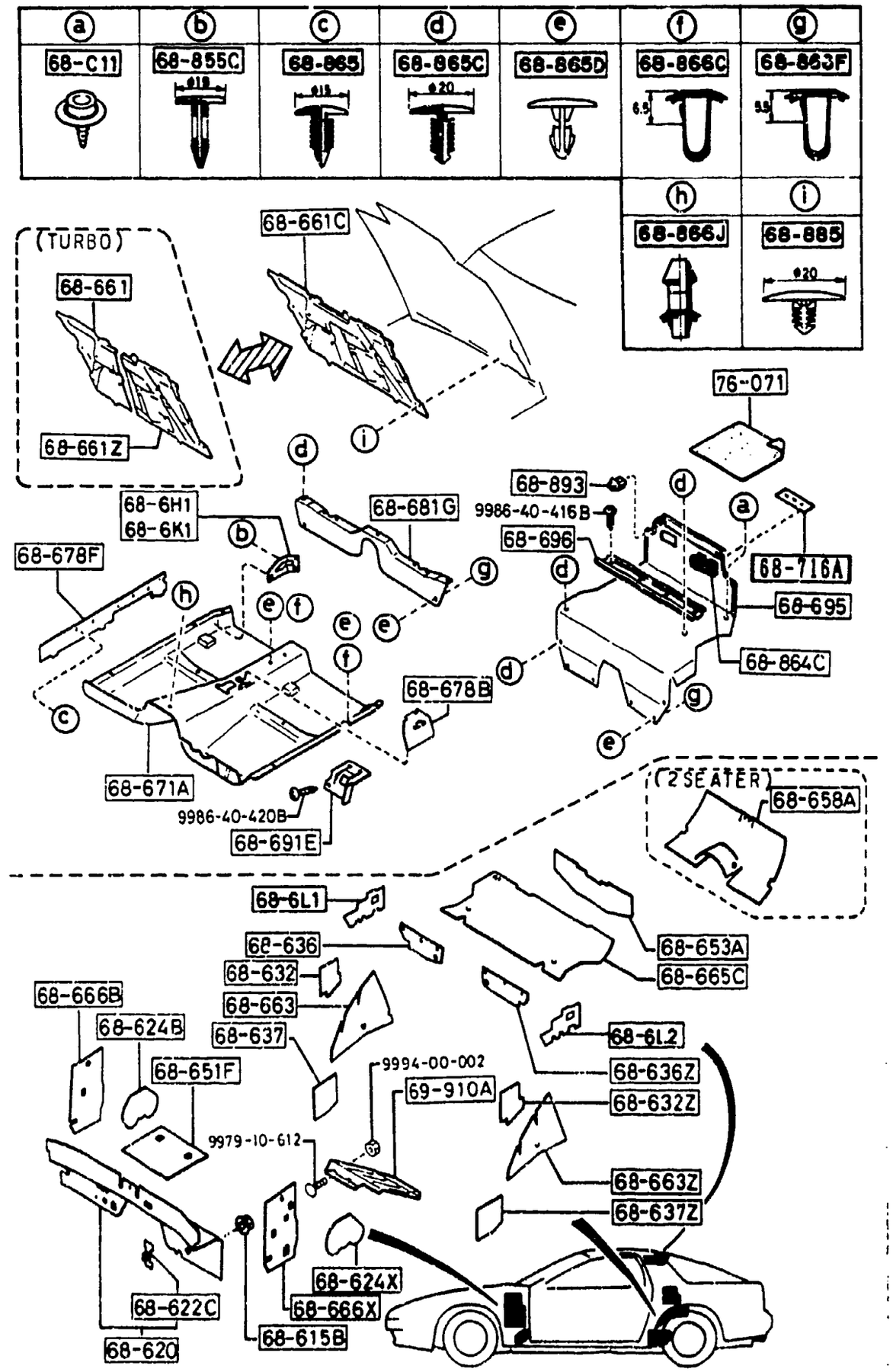

AUFA02

PART NO.	QTY	MODEL/RESTRICTION	MODEL/RESTRICTION	MODEL/RESTRICTION	FROM-TO
CONT'D					
FC04-68-671 A (FC04-68-671A)	1				-9113
02		FD8 BLACK			
19		FE0 RED			
48		FD9 BLUE			
FC02-68-671A	1	((W/O TURBO)>(W/O A.A.SUSP))			911-
02		FD8 FE1 BLACK			
19		FE0 RED			
48		FD9 BLUE			
FC04-68-671A	1	((W/O TURBO)>(A.A.SUSP)) (TURBO)			9113-
02		FD8 FE1 BLACK			
19		FE0 RED			
48		FD9 BLUE			
68-678B		MAT,PARKING BRAKE			
FC02-68-679	1				
02		FD8 FE1 BLACK			
19		FE0 RED			
48		FD9 BLUE			
68-678F		GUARD,HARNESS-FRONT			
FB67-68-678	2				
68-681G		MAT,END-TRUNK ROOM			
FB01-68-681B	1	GTUS, GXL, TURBO, (W/CARGO ROOM STRAP) (4SEATER)			
02		FD8 BLACK			
19		FE0 RED			
48		FD9 BLUE			
68-691E		COVER,OPENER-FLOOR MAT			
FB01-68-691D	1				
02		FD8 FE1 BLACK			
19		FE0 RED			
48		FD9 BLUE			

9113 FC3***-700067

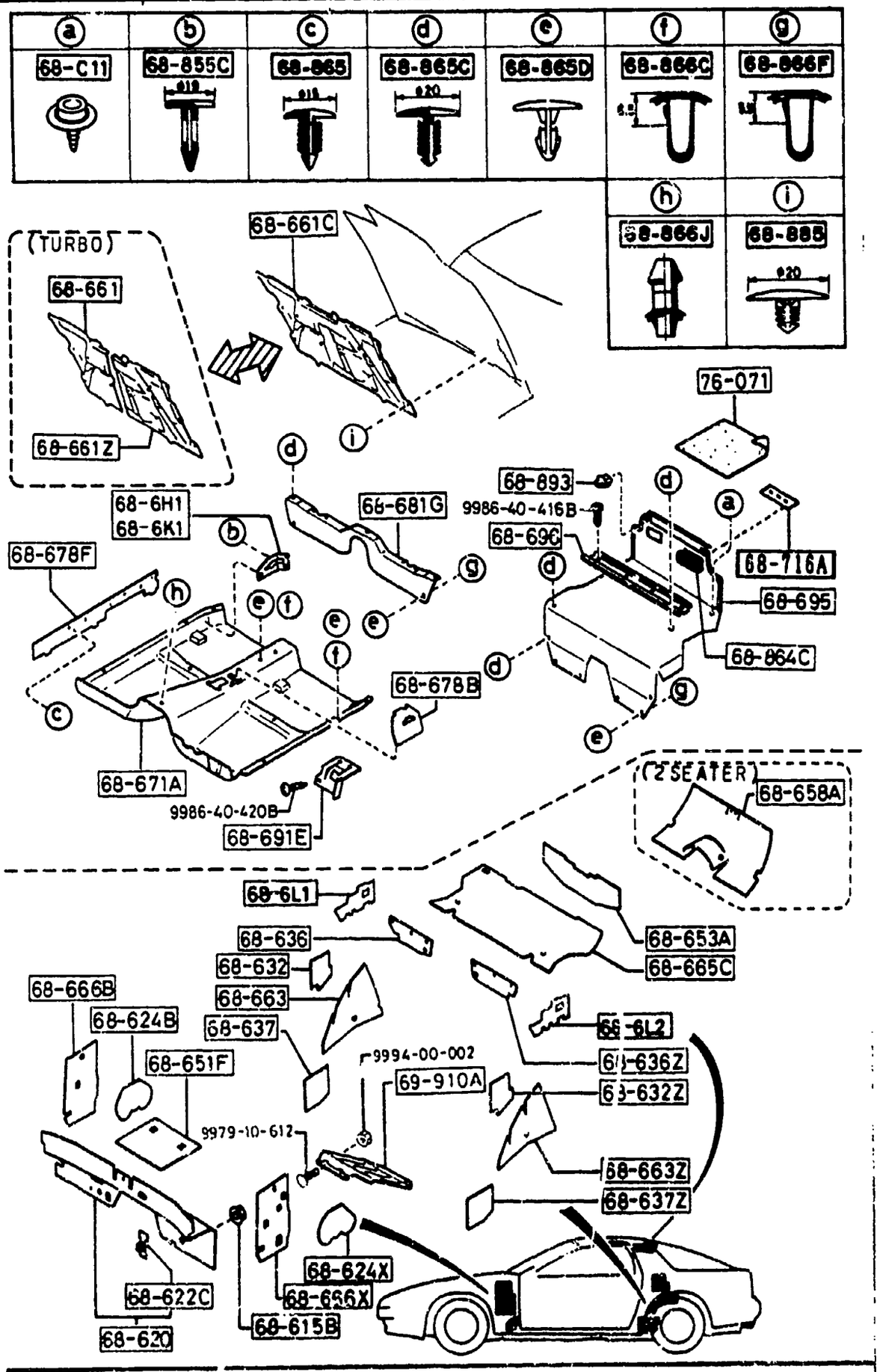

AUFA02

PART NO.	QTY	MODEL/RESTRICTION	MODEL/RESTRICTION	MODEL/RESTRICTION	FROM-TO
68-695		MAT,TRUNK ROOM			
FB09-68-69X	1	GTUS, GXL, TURBO, (W/CARGO ROOM STRAP)			
		(4SEATER)			
02		FD8 BLACK			
19		FE0 RED			
48		FD9 BLUE			
FC02-68-81XA	1	GTU, (W/STORAGE B. W/O CARGO STRAP W/O SILENCER PAD) (2SEATER)			
02		FD8 BLACK			
19		FE0 RED			
48		FD9 BLUE			
FC04-68-81XA	1	GXL, TURBO, (W/STORAGE B. W/CARGO STRAP W/SILENCER PAD) (2SEATER)			
02		FD8 BLACK			
19		FE0 RED			
48		FD9 BLUE			
FC05-68-81XA	1	GTUS, (W/STORAGE B. W/CARGO STRAP W/O SILENCER PAD) (2SEATER)			
02		FD8 BLACK			
19		FE0 RED			
48		FD9 BLUE			
FC06-68-81XA	1	GXL, (W/O STRAGE B. W/O CARGO STRAP W/SILENCER PAD) (2SEATER)			
02		FD8 BLACK			
19		FE0 RED			
48		FD9 BLUE			
68-696		PLATE,MAT SET			
FB09-68-696A	1	(4SEATER)			
02		FD8 FD8 FE1 BLACK			

4 H11

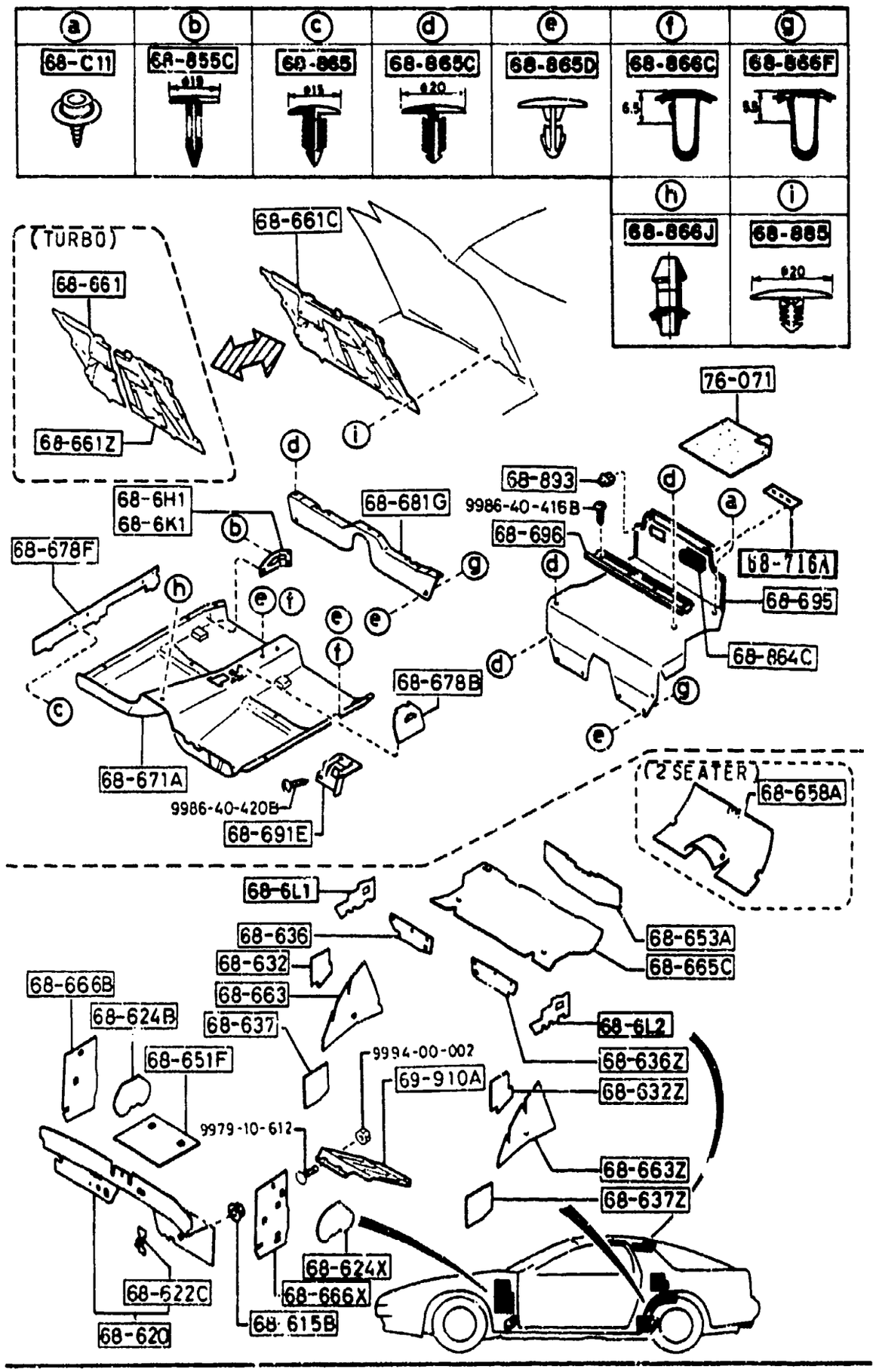

AUFA02

PART NO.	QTY	MODEL/RESTRICTION	MODEL/RESTRICTION	MODEL/RESTRICTION	FROM-TO
CONT'D					
19		FE0 FE0 RED			
48		FD9 FD9 BLUE			
68-716A		NUT,SPEED			
FB03-68-862	2				
68-855C		FASTENER			
G043-68-865B	2				
00		FE1 BLACK			
19		FE0 RED			
48		FD9 BLUE			
68-864C		GRILLE,EXTRACT.-T.S. TRIM			
FB01-68-864	2	FOR TEMPORARY TIRE			
02		FD8 FE1 BLACK			
19		FE0 RED			
48		FD9 BLUE			
68-865		FASTENER			
B003-68-865	11				
65		FE0 FD8 FD9 FE1 OFF-BLACK			
68-865C		FASTENER			
G032-68-865A	14				
00		FD8 FE1 BLACK			
68-865U		FASTENER			
S083-68-865A	7				-9A01
00		FD8 FE1 BLACK			
S083-68-865A	5				9A01-
00		FD8 FE1 BLACK			
68-866C		FASTENER,SEAL			
B235-68-865A	7				-9A01
B235-68-865A	5				9A01-
68-866F		FASTENER,SEAL			

9A01 FC3###-803554

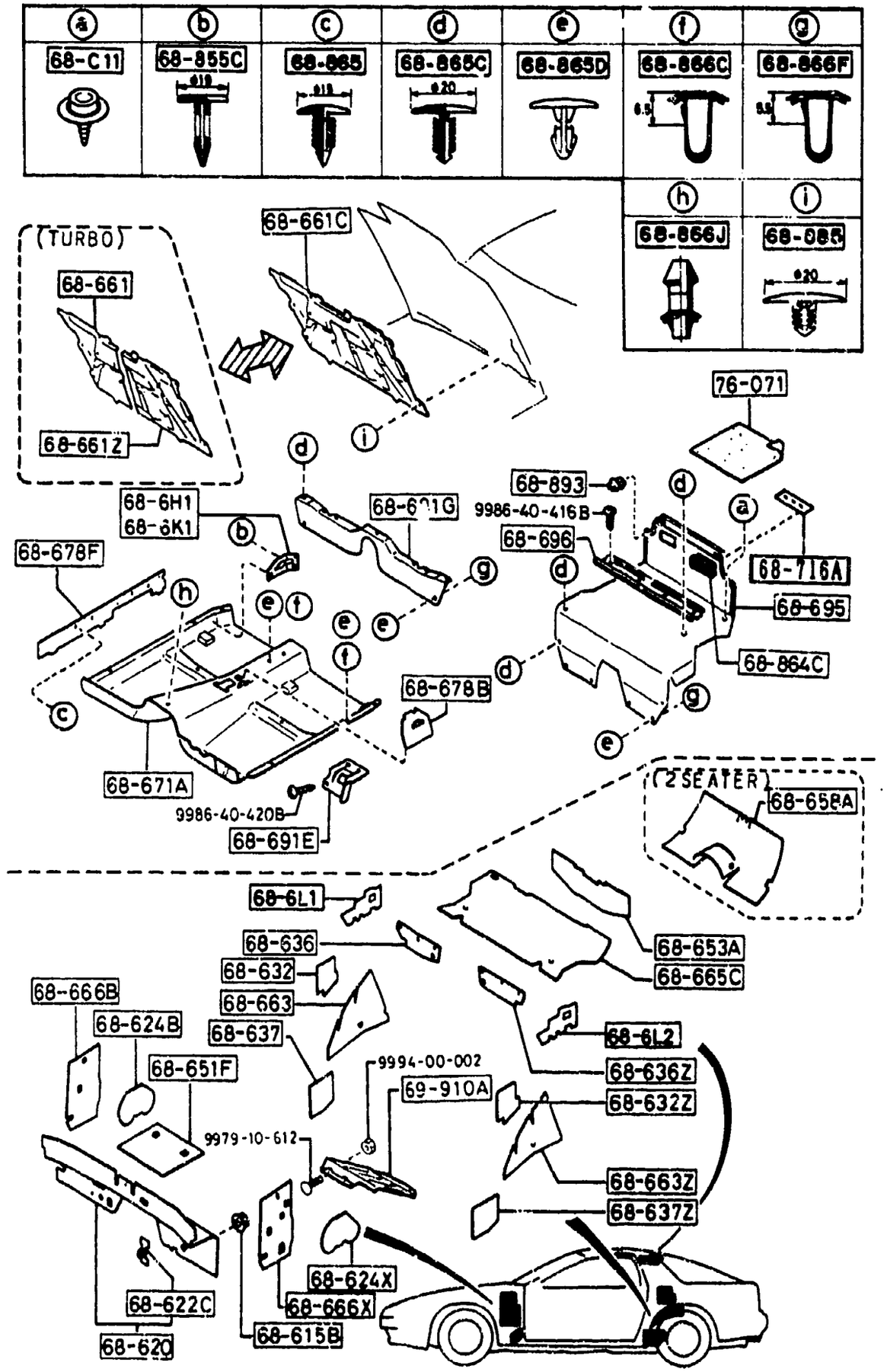

AUFA02

6860 -7 ✱ FLOOR MATS & PADS
(COUPE)

PART NO.	QTY	MODEL/RESTRICTION	MODEL/RESTRICTION	MODEL/RESTRICTION	FROM-TO
CONT'D					
G031-68-866B	4				
68-866J		FASTENER,SEAL			
FB01-68-866	1				
68-885		FASTENER			
G030-68-885B	16				
00		FD8 FD9 FE0 FD8 FD9 FE0 FE1 FD8 FD9 FE1 BLACK			
68-893		LATCH,TRUNK END TRIM			
FB01-68-893	2				
02		FD8 FE1 BLACK			
19		FE0 RED			
48		FD9 BLUE			
69-910A		SUPPORT,FOOT			
FB01-69-697A	1				
76-071		SILENCER,FLOOR			
0208-76-071	1	30CMX30CM			

CAT. AUFA02-06

1992-05

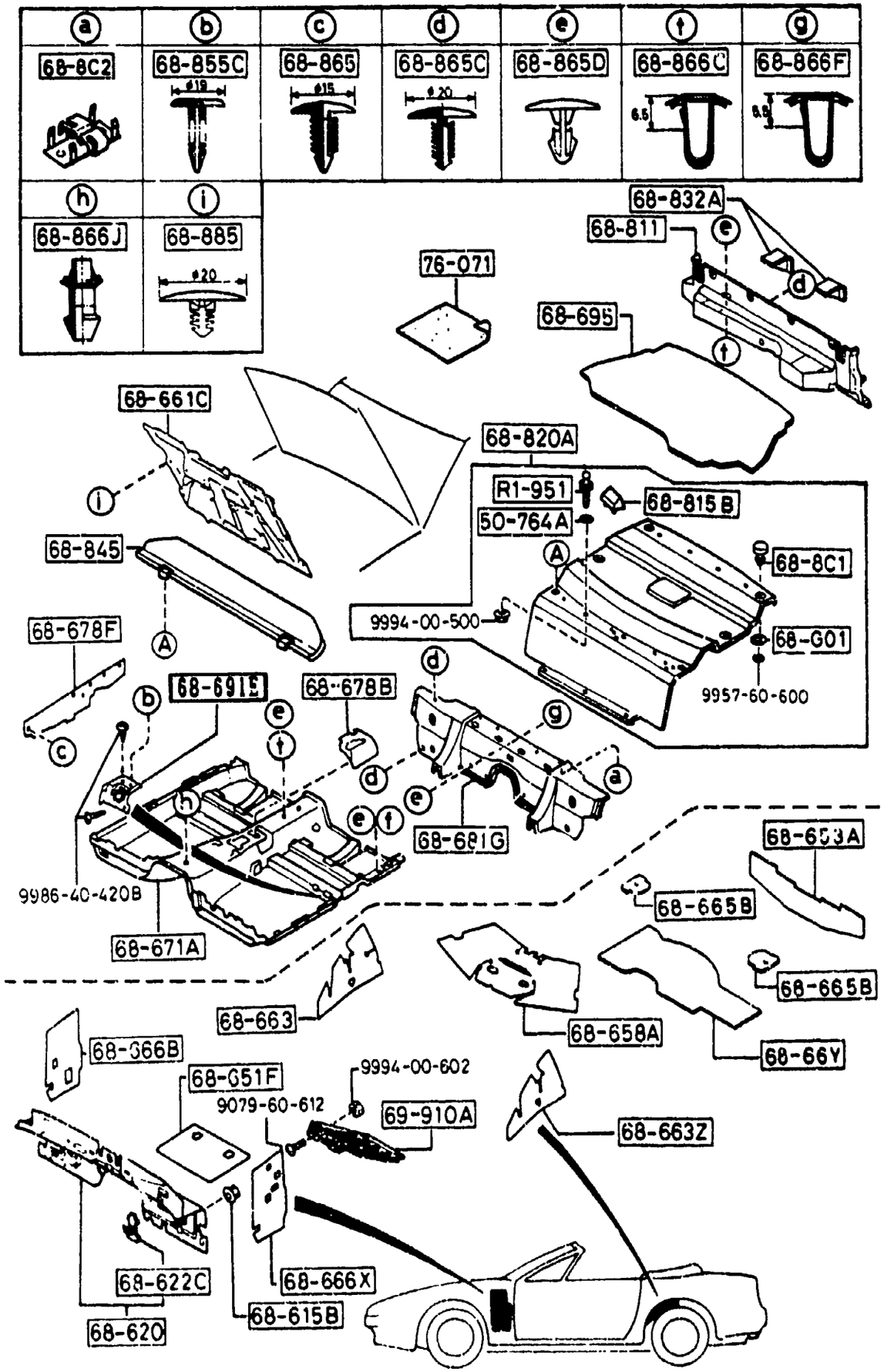

AUFA02

PART NO.	QTY	MODEL/RESTRICTION	MODEL/RESTRICTION	MODEL/RESTRICTION	FROM-TO
R1-951 B235-R1-951C	2	HOOK'A',HOOD COVER-REAR			
50-764A FB67-50-764A	2	WASHER,COVER-SPARE TIRE			
68-G01 FB67-68-G01	6	WASHER,SPARE TIRE COVER			
68-615B B100-68-615	11	NUT,FLANGE-CAP			
68-620 FB67-68-620	1	INSULATOR,DASHBOARD			
68-622C FB01-68-622	4	CLIP,DASHBOARD INSULATOR			
68-651F FB01-68-652	1	PAD,FRONT FLOOR			
68-653A FB01-68-653	1	INSULATOR,SPARE TIRE			
68-658A FB67-68-658A	1	PAD,STRAGE BOX			
68-66Y FB67-68-66Y	1	PAD,FLOOR-REAR			
68-661C FB03-68-661A	1	INSULATOR,BONNET			
68-663 FB01-68-663	1	INSULATOR(R),TIRE HOUSE			
68-663Z FB01-68-664	1	INSULATOR(L),TIRE HOUSE			
68-665B FB67-68-665	2	PAD,SUSPENSION			

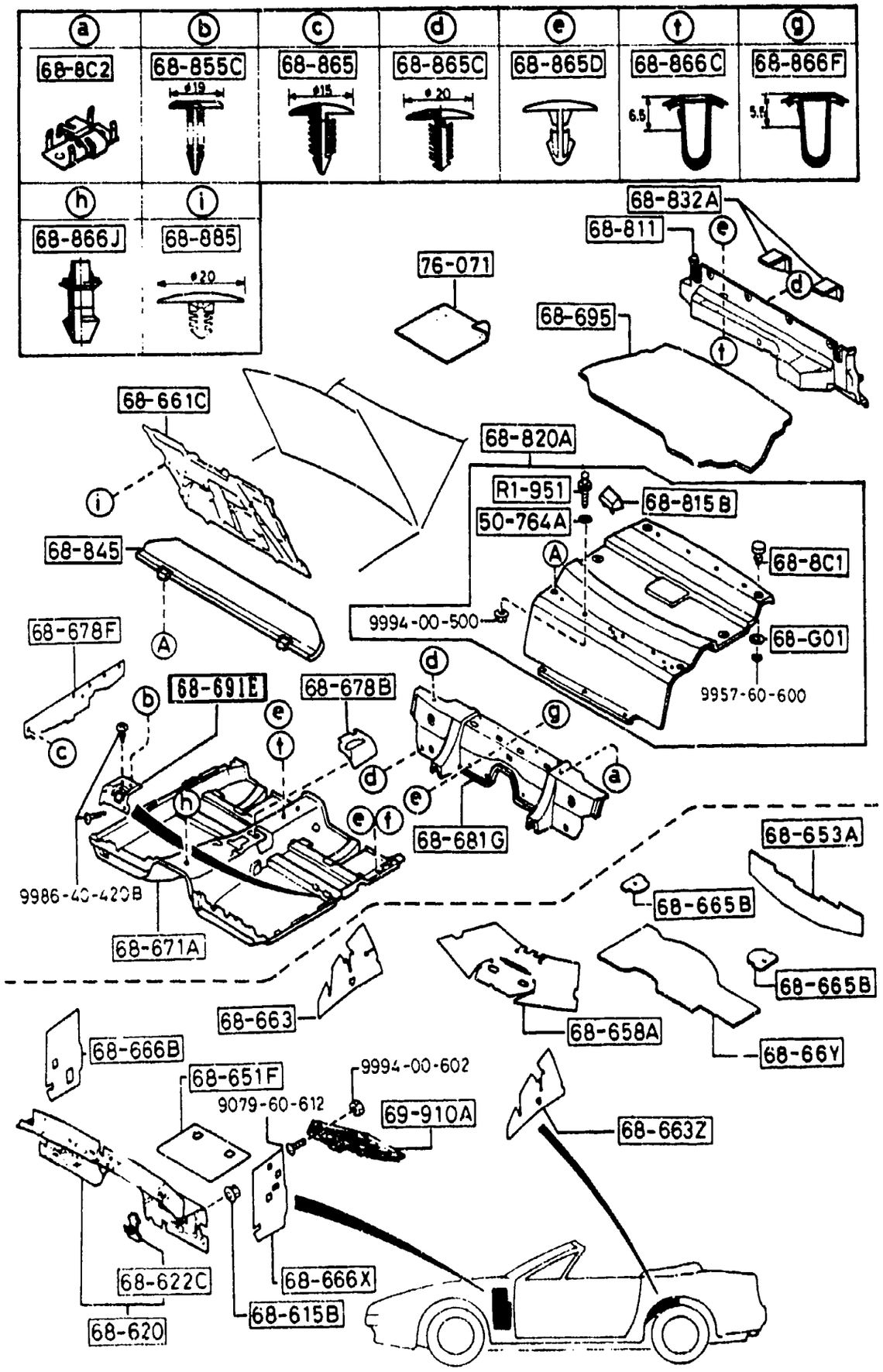

PART NO.	QTY	MODEL/RESTRICTION	MODEL/RESTRICTION	MODEL/RESTRICTION	FROM-TO
68-666B		PAD(R),SIDE-DASHBOARD			
FB03-68-666A	1				
68-666X		PAD(L),SIDE-DASHBOARD			
FB03-68-667A	1				
68-671A		MAT,FLOOR			
FB67-68-671B	1	(W/O AIR BAG)			
02		FD8 BLACK			
48		FD9 BLUE			
FC66-68-671	1	(W/AIR BAG)			
02		FD8 BLACK			
48		FD9 BLUE			
68-678B		MAT,PARKING BRAKE			
FB67-68-673	1				
02		FD8 FE1 BLACK			
19		FE0 RED			
48		FD9 BLUE			
68-678F		GUARD,HARNESS-FRONT			
FB67-68-678	2				
68-681G		MAT,END-TRUNK ROOM			
FB67-68-681A (FB67-68-681A)	1				-9101
02		FD8 BLACK			
48		FD9 BLUE			
FB67-68-681A	1				9101-
02		FD8 FE1 BLACK			
48		FD9 BLUE			
68-691E		COVER,OPENER-FLOOR MAT			
FB01-68-691D	1				
02		FD8 FE1 BLACK			
48		FD9 BLUE			
68-695		MAT,TRUNK ROOM			

9101 FC3***-700067

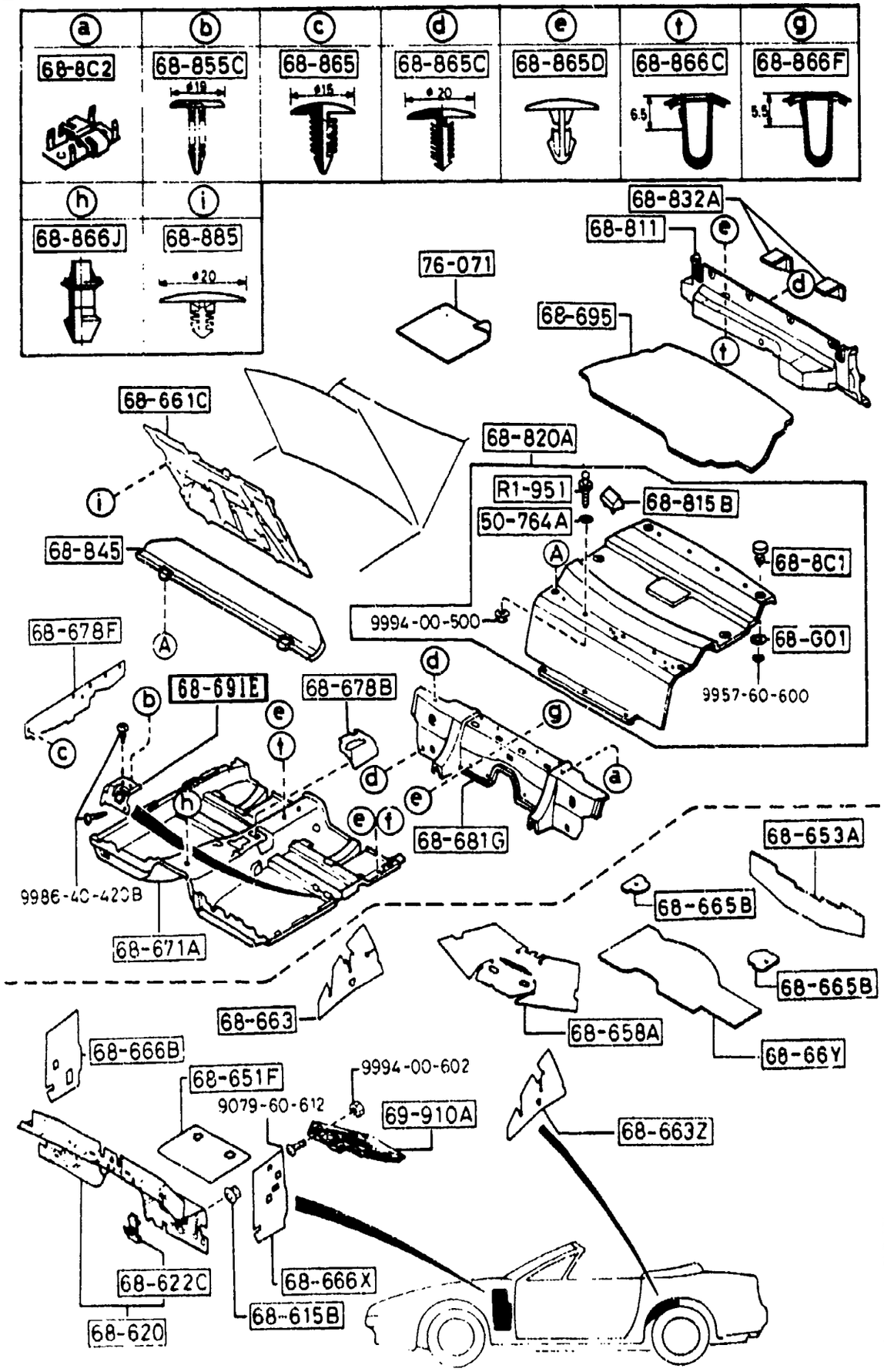

PART NO.	QTY	MODEL/RESTRICTION	MODEL/RESTRICTION	MODEL/RESTRICTION	FROM-TO
CONT'D					
FB67-68-831B	1				
07		FD8 FD9 FE1 GRAY/DARK GRAY			
68-8C1		FASTENER,TAPPING			
FB67-68-8C1	6				
02		FD8 FE1 BLACK			
48		FD9 BLUE			
68-8C2		NUT,EXPANSION			
FB67-68-8C2	2				
68-811		BOARD,PARTITION			
FC33-68-82X A (FC33-68-82XA)	1				-9B01
07		FD8 FD9 DARK GRAY			
FC33-68-82XA	1				9B01-
07		FD8 FD9 FE1 DARK GRAY			
68-815B		RUBBER,CUSHION			
FB67-68-815	2				
68-820A		COVER,SPARE TIRE			
FB67-68-810D	1				
02		FD8 FE1 BLACK			
48		FD9 BLUE			
68-832A		BRACKET,TRUNK BOARD			
FB67-68-832	2				
68-845		BLOCKER,WIND			
FB67-68-845	1				
02		FD8 FE1 BLACK			
48		FD9 BLUE			
68-855C		FASTENER			
G043-68-865B	1				
00		FD8 FD8 FD9 FE0 FE1 BLACK			

9B01 FC3MMM-804224

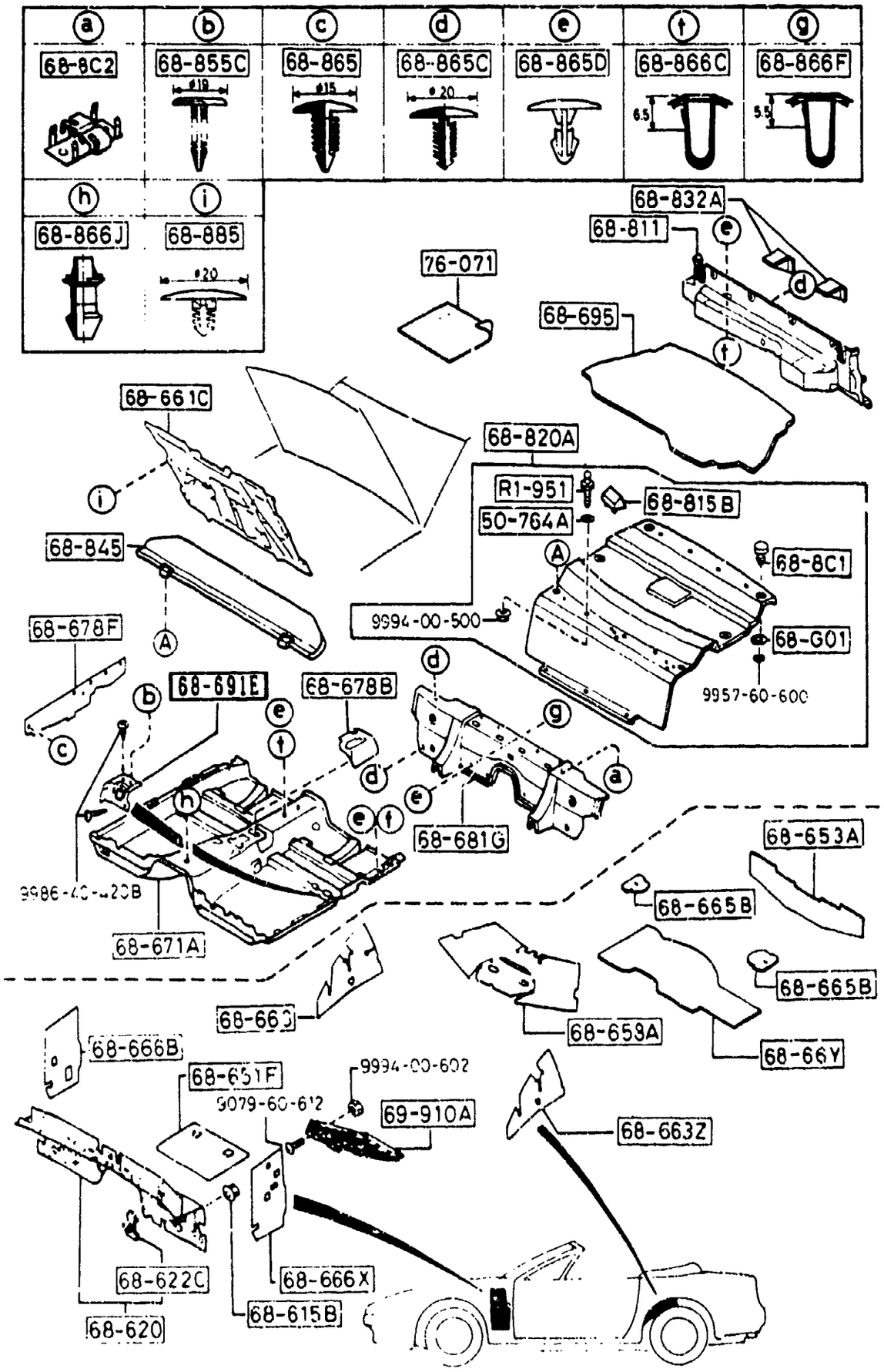

AUFA02

PART NO.	QTY	MODEL/RESTRICTION	MODEL/RESTRICTION	MODEL/RESTRICTION	FROM-TO
68-865		FASTENER			
B003-68-865	11				
65		FD8 FD9 FE0 FD8 FD9 FE0 FE1 FD8 FD9 FE1 OFF-BLACK			
68-865C		FASTENER			
G032-68-865A	17				
00		FD8 FE1 BLACK			
48		FD9 BLUE			
68-865D		FASTENER			
S083-68-865A	11				
00		FD8 FE1 BLACK			
48		FD9 BLUE			
68-866C		FASTENER,SEAL			
B235-68-865A	9				
68-866F		FASTENER,SEAL			
G031-68-866B	2				
68-866J		FASTENER,SEAL			
FB01-68-866	1				
68-885		FASTENER			
G030-68-885B	16				
00		FD8 FD9 FE0 FD8 FD9 FE0 FE1 FD8 FD9 FE1 BLACK			
69-910A		SUPPORT,FOOT			
FB01-69-697A	1				
76-071		SILENCER,FLOOR			
0208-76-071	1	30CMX30CM			

SECTION NAME INDEX (BODY)2/2

LO.NO	SEC.NO	SECTION NAME
4-C03	6100	HEATER
4-E03	6110	HEATER UNIT COMPONENTS
4-F03	6115	HEATER CONTROLS COMPONENTS
4-G03	6120	HEATER BLOWER COMPONENTS
4-I03	6130	AIR CONDITIONER
4-J03	6230	LIFT GATE MECHANISMS (COUPE)
4-M03	6300	WINDOW GLASSES (COUPE)
4-N03	6300A	WINDOW GLASSES (CONVERTIBLE)
4-C04	6330	SUNROOF (COUPE)
4-G04	6330A	SUNROOF (CONVERTIBLE)
4-M04	6600	SWITCHES & RELAYS (ENGINE)
4-G05	6610	DASHBOARD SWITCHES
4-H05	6611	COMBINATION SWITCH
4-I05	6612	CLUSTER SWITCH
4-L05	6615	POWER WINDOW SWITCHES
4-M05	6630	RELAYS & UNIT (BODY)
4-D06	6635	DOOR SWITCH & HORNS
4-E06	6640	AUTO CRUISE CONTROL SYSTEM
4-F06	6680	AUDIO SYSTEMS (RADIO & TAPE DECK) (COUPE)
4-K06	6680 A	AUDIO SYSTEMS (RADIO & TAPE DECK) (CONVERTIBLE)
4-M06	6682	AUDIO SYSTEMS (ANTENNA & SPEAKER) (COUPE)
4-D07	6682 A	AUDIO SYSTEMS (ANTENNA & SPEAKER) (CONVERTIBLE)
4-G07	6684	AUDIO SYSTEMS(NOISE SUPPRESSOR & EARTH CORD)
4-H07	6700	WIRING HARNESSES(FRONT & REAR)
4-N07	6701	WIRING HARNESSES(ENGINE & T/MISSION)
4-D08	6702	WIRING HARNESSES(DASHBOARD)
4-E08	6703	WIRING HARNESSES(DOOR,FLOOR/CEILING)
4-G08	6704	WIRING HARNESS CLAMPS
4-J08	6720	WINDSHIELD WASHER (1.5L & 2.5L)
4-L08	6720 A	WINDSHIELD WASHER (5.7L)
4-N08	6730	WINDSHIELD WIPERS
4-C09	6740	WIPER MOTOR COMPONENTS(FRONT)
4-D09	6750	WINDOW WIPER & WASHER (REAR)
4-G09	6760	WINDOW WIPER MOTOR COMPONENTS (REAR)
4-H09	6800	CEILING TRIMS (COUPE)
4-J09	6800A	CEILING TRIMS (CONVERTIBLE)
4-K09	6810	ROLLEBAR (CONVERTIBLE)
4-N09	6820	PILLAR TRIMS (COUPE)
4-F10	6820A	PILLAR TRIMS (CONVERTIBLE)
4-G10	6840	TRIMS & SCUFF PLATES (COUPE)
4-L10	6840A	TRIMS & SCUFF PLATES (CONVERTIBLE)
4-N10	6845	STRAGE BOX (COUPE) (GXL,TURBO)
4-D11	6860	FLOOR MATS & PADS (COUPE)
4-K11	6860A	FLOOR MATS & PADS (CONVERTIBLE)
4-C12	6870	SERVICE TOOLS
4-D12	6900	VISORS,ASSIST HANDLES & MIRRORS (COUPE)
4-H12	6900A	VISORS,ASSIST HANDLES & MIRRORS (CONVERTIBLE)
4-K12	6930	CAUTION PLATES & LABELS
4-N12	7250	QUARTER WINDOW & TRIMS
4-E13	7800	SPOILERS & RELATED PARTS
4-C14	7900	ACCESSORIES

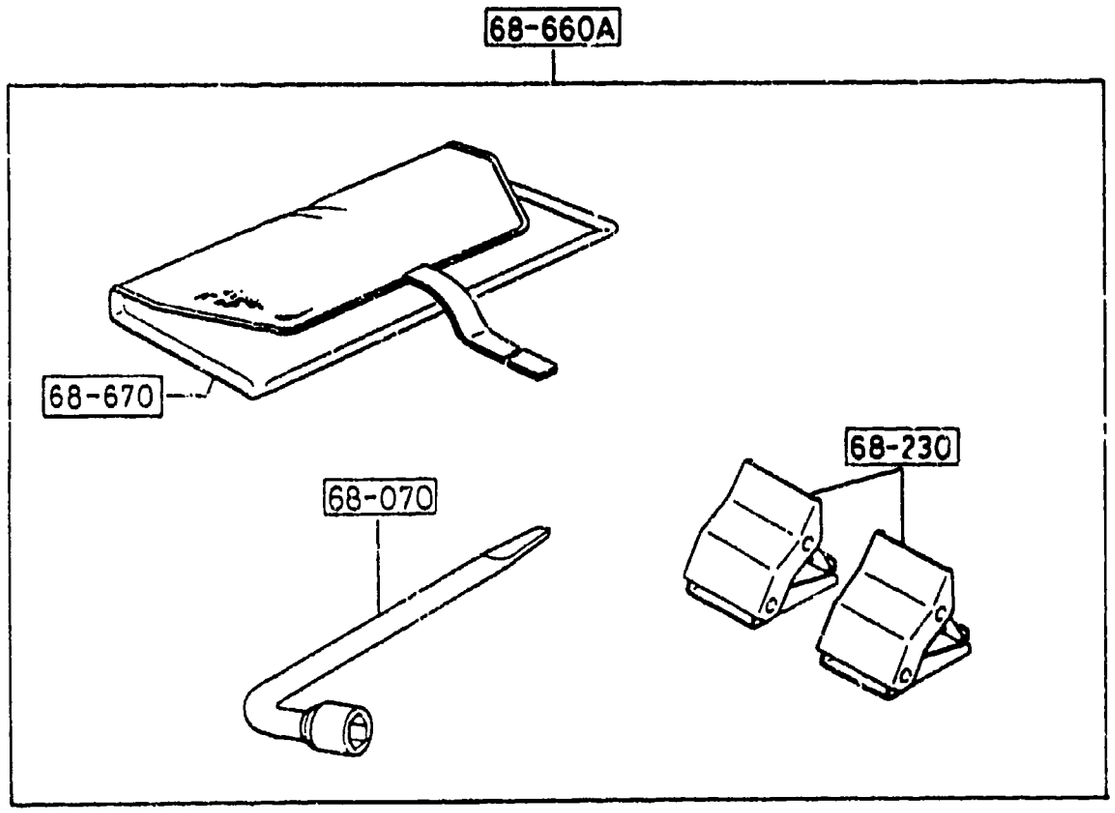

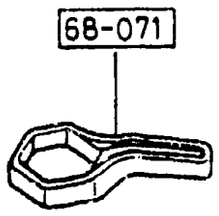

PART NO.	QTY	MODEL/RESTRICTION	MODEL/RESTRICTION	MODEL/RESTRICTION	FROM-TO
68-070		WRENCH,HUB NUT			
0810-68-070C (0810-68-070E)	1				-9601
0810-68-070E	1				9601-
68-071		WRENCH,WHEEL CAP			
F057-68-071	1	(CONVERTIBLE)			
68-230		STOPPER,WHEEL			
0208-68-230	2				
68-660A		TOOL SET			
FB01-69-650A	1				
68-670		BAG,TOOL			
FB01-69-670A	1				

9601 FC3***-708021

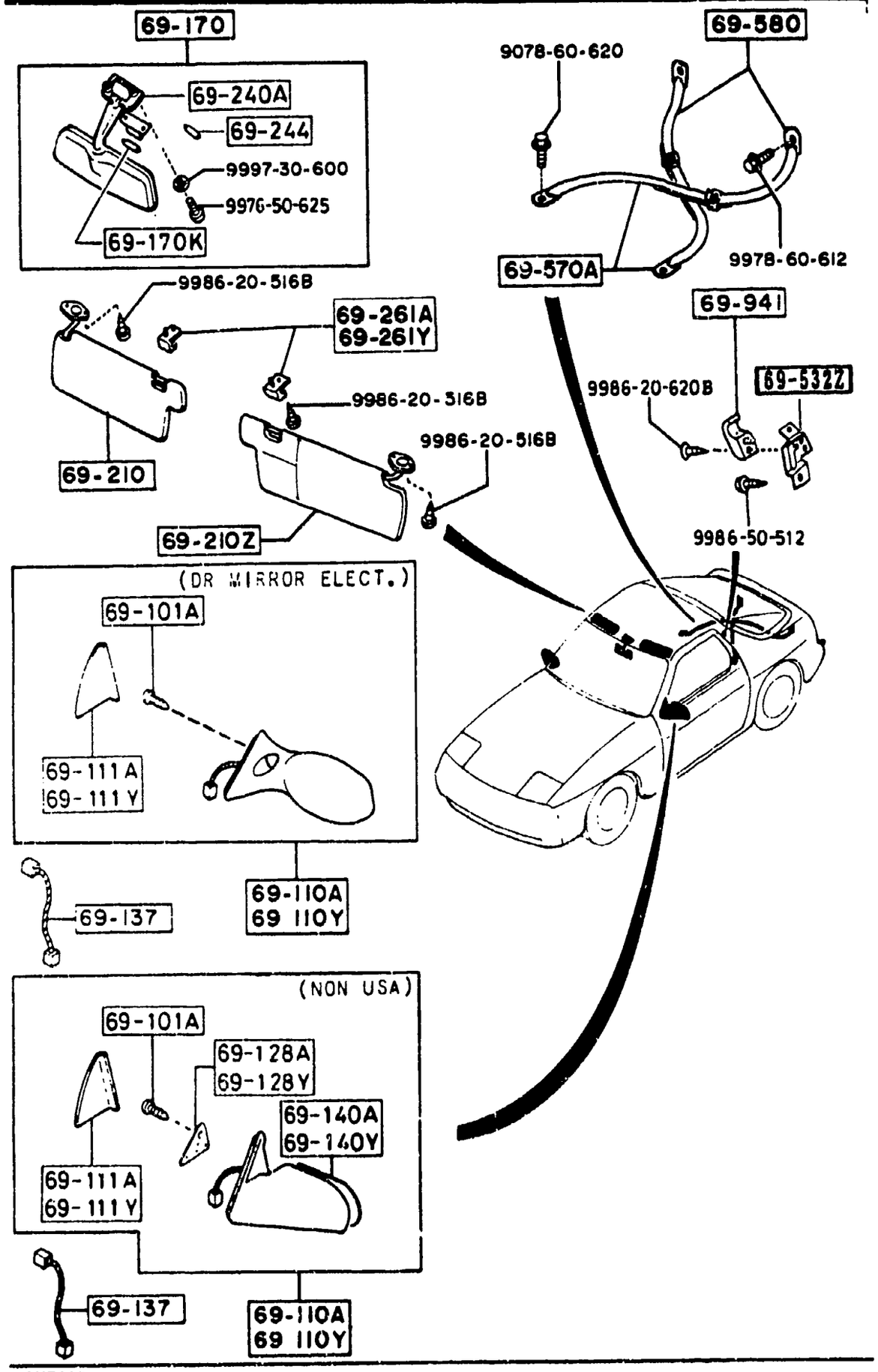

AUFA02

PART NO.	QTY	MODEL/RESTRICTION	MODEL/RESTRICTION	MODEL/RESTRICTION	FROM-TO
69-101A		SCREW,DOOR MIRROR			
G032-69-126	6	ICHIKO			
69-110A		MIRROR(R),DOOR			
FB11-69-110D	1	NON USA,			
FC01-69-110	1	USA, (DR MIRROR ELECT.)			
PZ		PZ BRILLIANT BLACK			
SQ		SQ BLAZE RED			
UC		UC CRYSTAL WHITE			
WY		WY NOBLE WHITE			
1F		1F WINNING SILVER M.			
3G		3G SHADOW SILVER METALL			
5D		5D HARBOR BLUE M.			
6H		6H MELLOW BURGUNDY MC			
69-110Y		MIRROR(L),DOOR			
FB11-69-170D	1	NON USA,			
FC01-69-170	1	USA, (DR MIRROR ELECT.)			
PZ		PZ BRILLIANT BLACK			
SQ		SQ BLAZE RED			
UC		UC CRYSTAL WHITE			
WY		WY NOBLE WHITE			
1F		1F WINNING SILVER M.			
3G		3G SHADOW SILVER METALL			
5D		5D HARBOR BLUE M.			
6H		6H MELLOW BURGUNDY MC			
69-111A		GARNISH(R),SAIL-IN.			
F045-69-112A	1				
69-111Y		GARNISH(L),SAIL-IN.			
F045-69-172A	1				

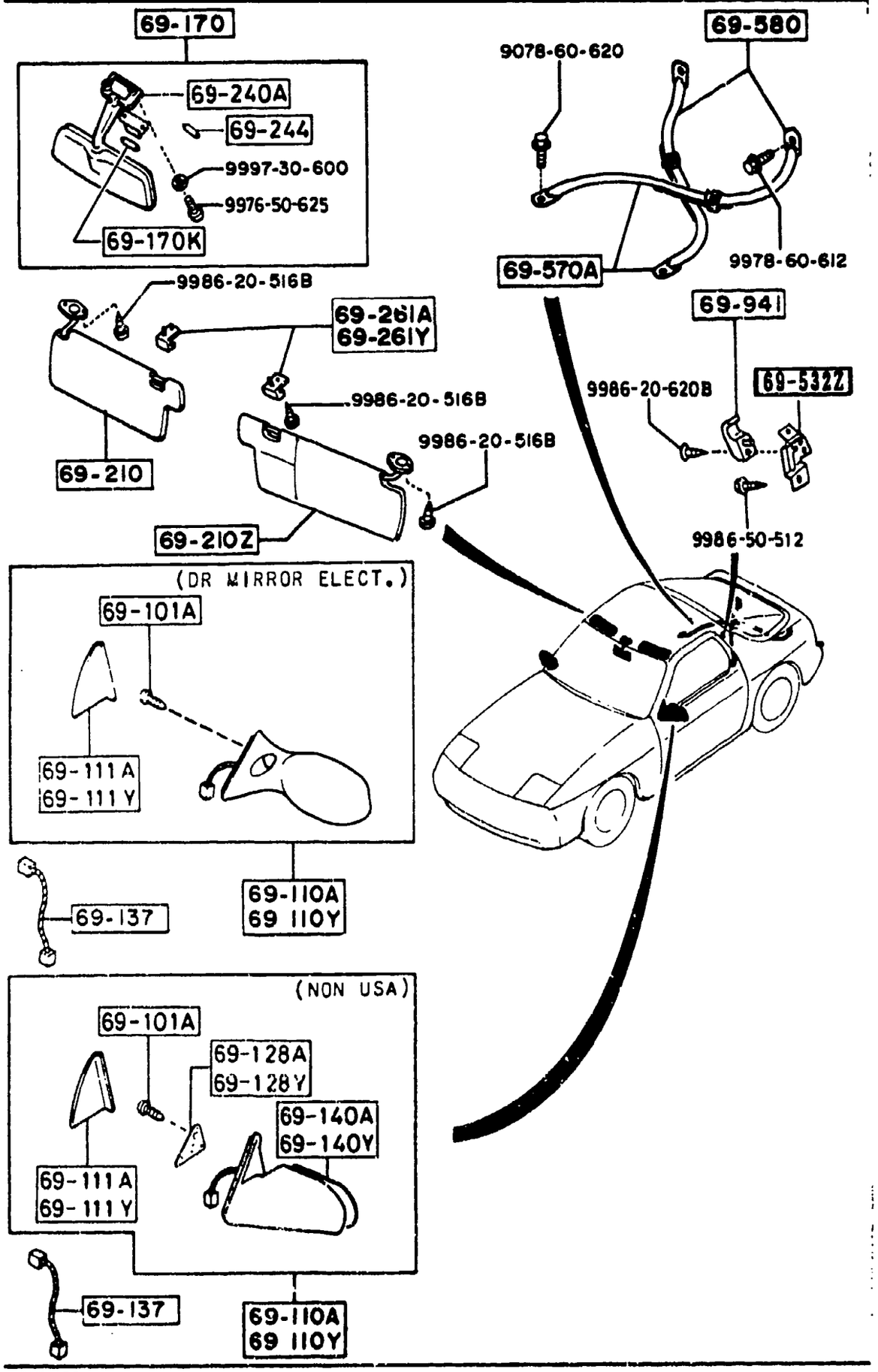

AUFA02

PART NO.	QTY	MODEL/RESTRICTION	MODEL/RESTRICTION	MODEL/RESTRICTION	FROM-TO
69-128A		BOOT(R),DOOR MIRROR			
FB01-69-128	1	NON USA,			
69-128Y		BOOT(L),DOOR MIRROR			
FB01-69-188	1	NON USA,			
69-137		WIRE,REMOCON. MIRROR			
F045-69-108A	2				
69-140A		GLASS(R),MIRROR			
FB01-69-123	1	NON USA,			
69-140Y		GLASS(L),MIRROR			
FB01-69-183	1	NON USA,			
69-170		MIRROR,INTERIOR			
FB35-69-220F	1				
00		FD8 FD9 FE0 FD8 FD9 BLACK			
69-170K		BULB,INTERIOR MIRROR			
99700-5100	1	12V 10W			
69-210		SUN VISOR(R)			
FC02-69-270	1	(W/O SUN-RF)			
02		FD8 BLACK			
19		FE0 RED			
48		FD9 BLUE			
FC04-69-270	1	(SUNROOF)			
02		FD8 BLACK			
19		FE0 RED			
48		FD9 BLUE			
69-210Z		SUN VISOR(L)			
FC01-69-320	1	(W/O SUN-RF)			
02		FD8 BLACK			
19		FE0 RED			
48		FD9 BLUE			

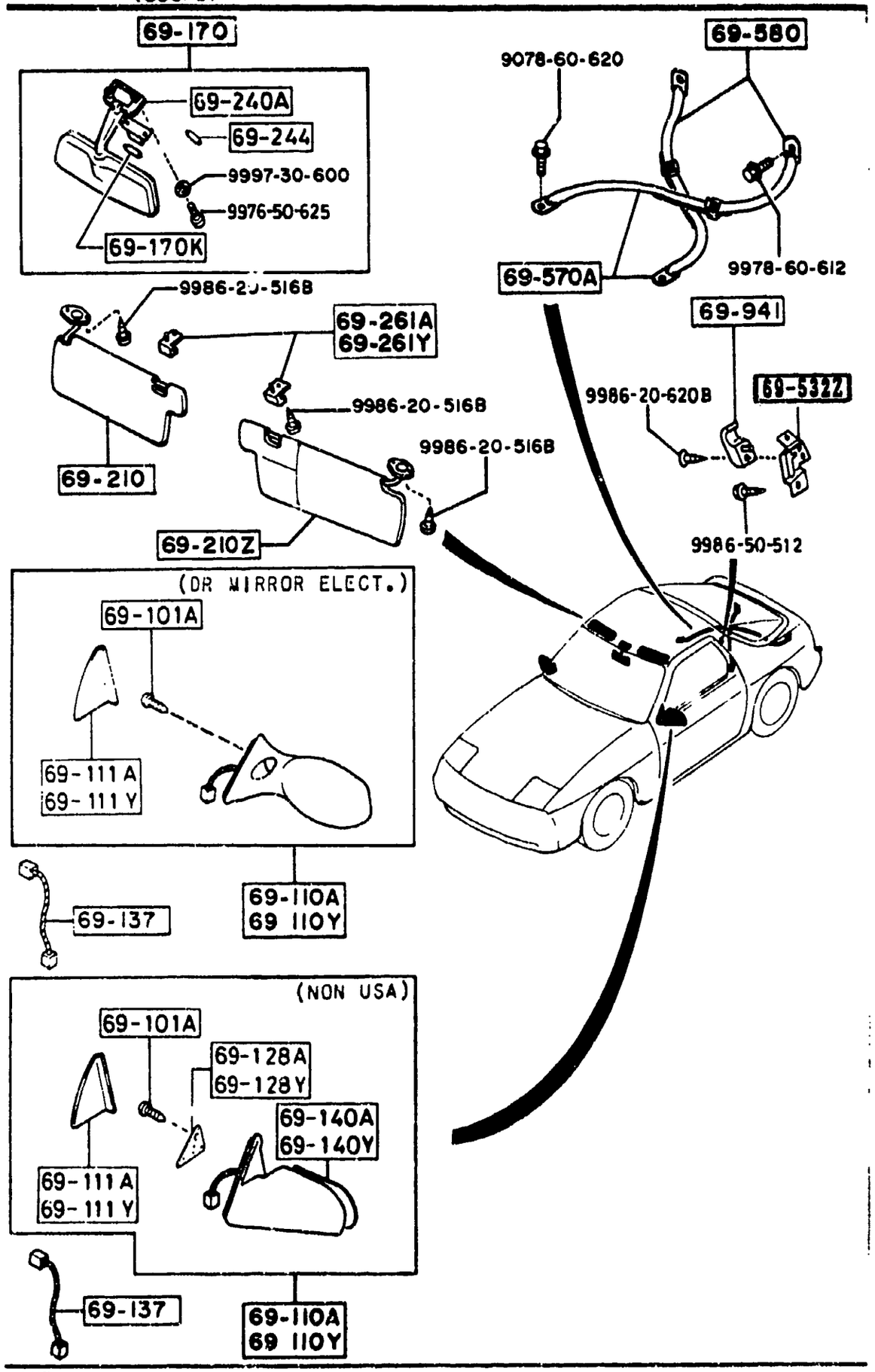

PART NO.	QTY	MODEL/RESTRICTION	MODEL/RESTRICTION	MODEL/RESTRICTION	FROM-TO
CONT'D					
FC03-69-320	1	(SUNROOF)			
02		FD8 BLACK			
19		FE0 RED			
48		FD9 BLUE			
+---------+					
| 69-240A |		BASE,INTERIOR MIRROR			
+---------+					
FB10-69-240	1				
+---------+					
| 69-244 |		PIN,INTERIOR MIRROR			
+---------+					
FB10-69-244	2				
+---------+					
| 69-261A |		ADAPTER(R),CTR-SUN V ISOR			
+---------+					
FB01-69-261	1	(W/O SUN-RF)			
02		FD8 FE1 BLACK			
19		FE0 RED			
48		FD9 BLUE			
FB03-69-261	1	(SUNROOF)			
02		FD8 FE1 BLACK			
19		FE0 RED			
48		FD9 BLUE			
+---------+					
| 69-261Y |		ADAPTER(L),CTR-SUN V ISOR			
+---------+					
FB01-69-262	1	(W/O SUN-RF)			
02		FD8 FE1 BLACK			
19		FE0 RED			
48		FD9 BLUE			
FB03-69-262	1	(SUNROOF)			
02		FD8 FE1 BLACK			
19		FE0 RED			
48		FD9 BLUE			
+---------+					
| 69-532Z |		BRKT(L),COAT HANGER			
+---------+					
FC01-69-542	1				
+---------+					
| 69-570A |		STRAP'A',CARGOROOM			
+---------+					
FA54-69-571	2	GTUS, GXL, TURBO, (W/CARGO ROOM STRAP)			

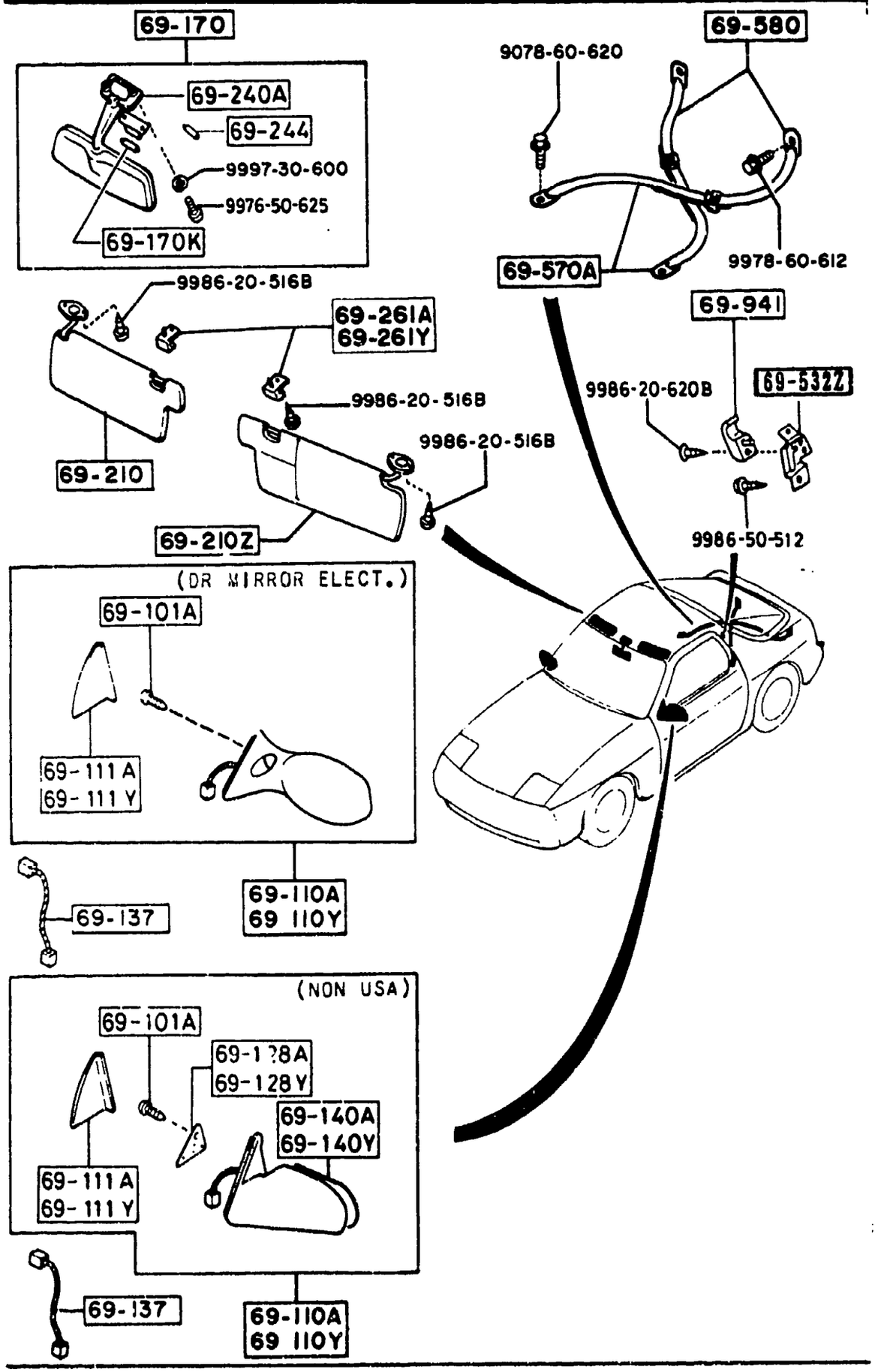

AUFA02

PART NO.	QTY	MODEL/RESTRICTION	MODEL/RESTRICTION	MODEL/RESTRICTION	FROM-TO
CONT'D					
* 02		FD8 BLACK			
19		FE0 RED			
48		FD9 BLUE			
+---------+					
| 69-580 |		STRAP'B',CARGOROOM			
+---------+					
FA54-69-572	2	GTUS, GXL, TURBO, (W/CARGO ROOM STRAP)			
* 02		FD8 BLACK			
19		FE0 RED			
48		FD9 BLUE			
+---------+					
| 69-941 |		HANGER,COAT			
+---------+					
FB01-69-531	1				
02		FD8 FE1 BLACK			
19		FE0 RED			
48		FD9 BLUE			

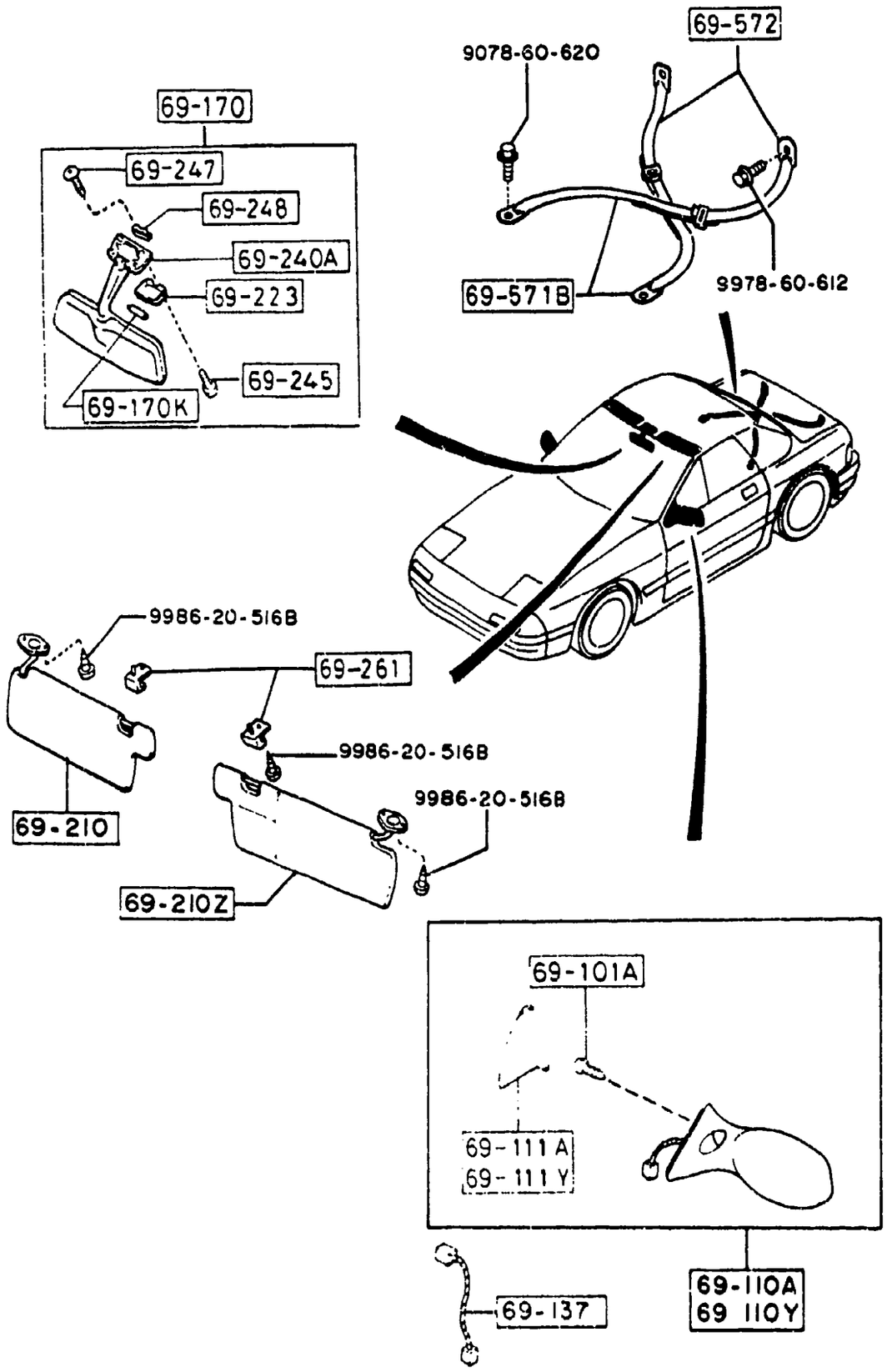

PART NO.	QTY	MODEL/RESTRICTION	MODEL/RESTRICTION	MODEL/RESTRICTION	FROM-TO
69-101A		SCREW,DOOR MIRROR			
G032-69-126	6	ICHIKO			
69-110A		MIRROR(R),DOOR			
FC01-69-110	1				
PZ		PZ BRILLIANT BLACK			
SQ		SQ BLAZE RED			
UC		UC CRYSTAL WHITE			
WY		WY NOBLE WHITE			
1F		1F WINNING SILVER M.			
3G		3G SHADOW SILVER METALL			
5D		5D HARBOR BLUE M.			
6H		6H MELLOW BURGUNDY MC			
69-110Y		MIRROR(L),DOOP			
FC01-69-170	1				
PZ		PZ BRILLIANT BLACK			
SQ		SQ BLAZE RED			
UC		UC CRYSTAL WHITE			
WY		WY NOBLE WHITE			
1F		1F WINNING SILVER M.			
3G		3G SHADOW SILVER METALL			
5D		5D HARBOR BLUE M.			
6H		6H MELLOW BURGUNDY MC			
69-111A		GARNISH(R),SAIL-IN.			
F045-69-112A	1				
69-111Y		GARNISH(L),SAIL-IN.			
F045-69-172A	1				
69-137		WIRE,REMOCON. MIRROR			
F045-69-108A	2				

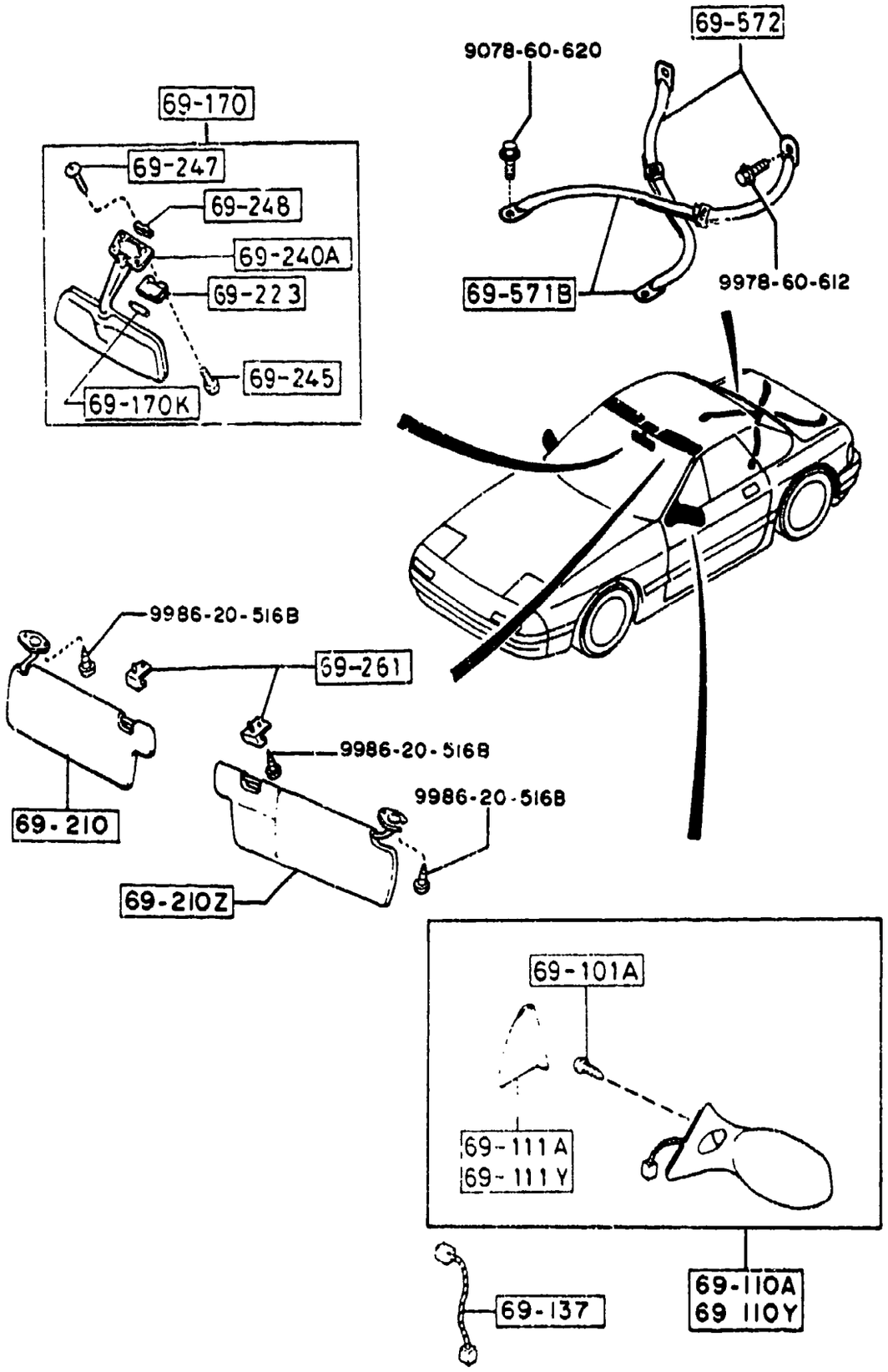

PART NO.	QTY	MODEL/RESTRICTION	MODEL/RESTRICTION	MODEL/RESTRICTION	FROM-TO
69-170		MIRROR,INTERIOR			
FB68-69-220B	1				
02		FD8 FE1 BLACK			
48		FD9 BLUE			
69-170K		BULB,INTERIOR MIRROR			
99700-5100	1	12V 10W			
69-210		SUN VISOR(R)			
FB67-69-270A	1				
02		FD8 FE1 BLACK			
48		FD9 BLUE			
69-210Z		SUN VISOR(L)			
FB67-69-320A	1	(W/O AIR BAG)			
02		FD8 FE1 BLACK			
48		FD9 BLUE			
FC66-69-320A (FC66-69-320A)	1				-9C01
02		FD8 FE1 BLACK			
48		FD9 BLUE			
FC66-69-320A	1	(W/AIR BAG)			9C01-
02		FD8 FE1 BLACK			
48		FD9 BLUE			
69-223		LENS,INTERIOR LAMP			
FB67-69-233	1				
69-240A		BASE,INTERIOR MIRROR			
FB67-69-240	1				
02		FD8 FE1 BLACK			
48		FD9 BLUE			
69-245		SCREW,INTEROR MIRROR			
FB67-69-245	2				
69-247		HOLDER,PIN			
FB67-69-247	1				

9C01 FC3####-804800

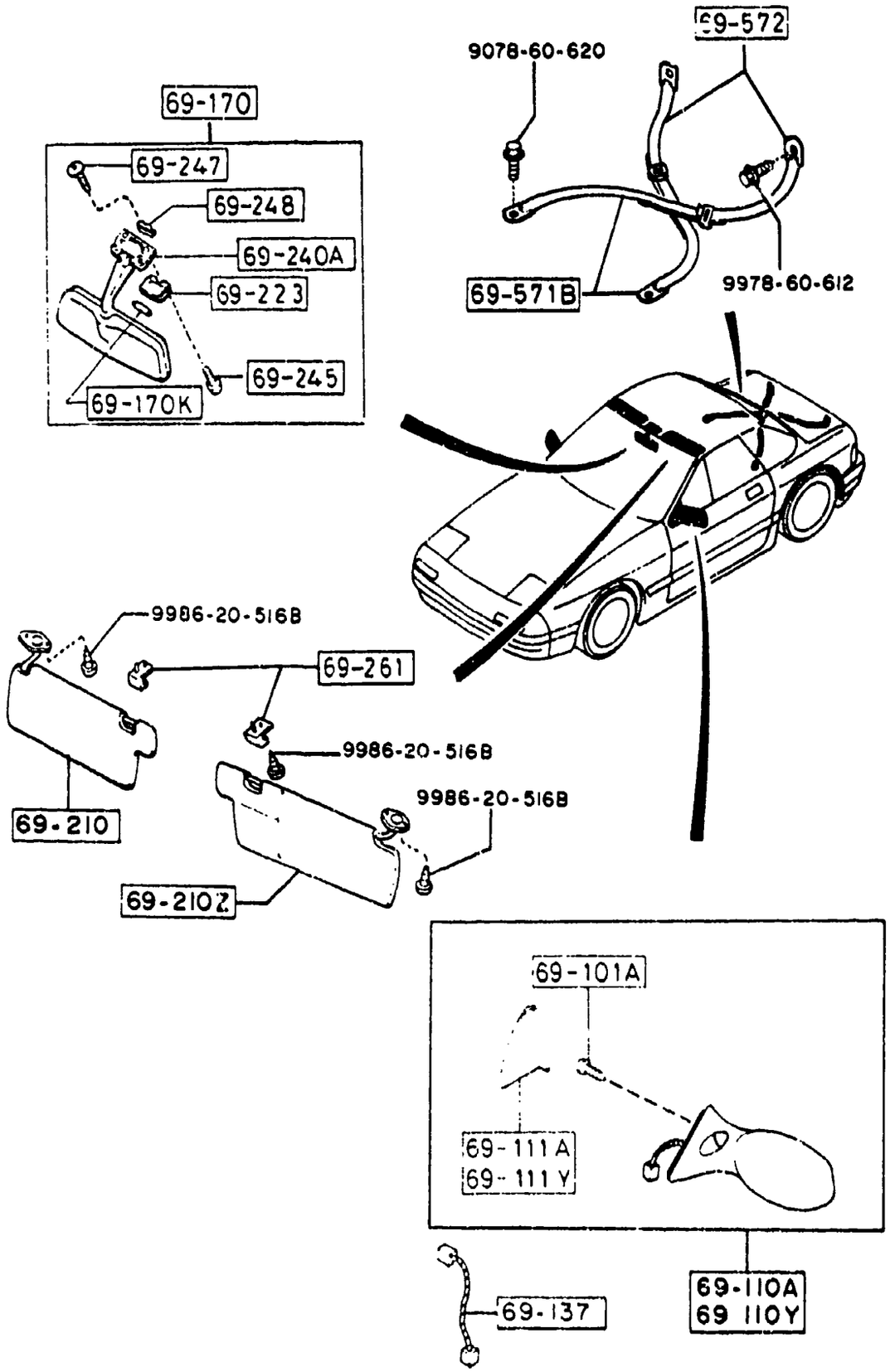

6900A -3 * VISORS,ASSIST HANDLES & MIRRORS
(CONVERTIBLE)

PART NO.	QTY	MODEL/RESTRICTION	MODEL/RESTRICTION	MODEL/RESTRICTION	FROM-TO
69-248		SPRING,INTERIOR MIRROR			
FB67-69-248	1				
69-261		ADAPTER,SUN VISOR			
H260-69-261	2				
02		FD8 FE1 BLACK			
48		FD9 BLUE			
69-571B		STRAP'A',L/CPMT			
FB67-69-571	2				
69-572		STRAP'B',L/CPMT			
FB67-69-572	2				

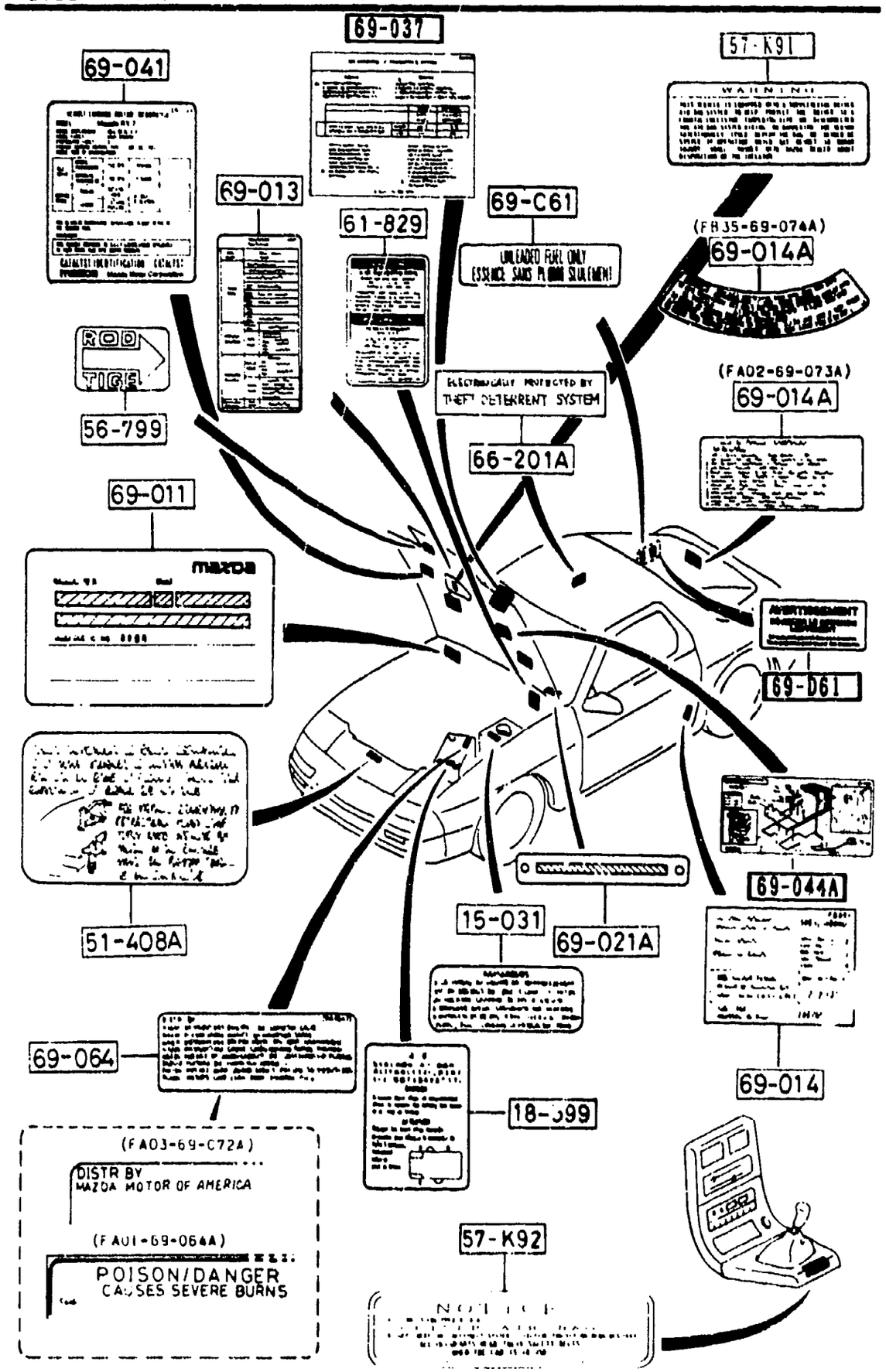

AUFA02

PART NO.	QTY	MODEL/RESTRICTION	MODEL/RESTRICTION	MODEL/RESTRICTION	FROM-TO
15-031		LABEL,CAUTION			
8871-15-357	1	(W/SUB TANK LABEL)			
18-599		LABEL,CAUTION-BATTEY BOX			
N318-18-599	1				
51-408A		LABEL,COUTION-RETRAC TABLE			
FB34-51-408	1				
56-799		LABEL,BONNET STAY			
UB39-56-799	1				
57-K91		LABEL'A',CAUTION-A/B			
*NA01-57-K91	1				
57-K92		LABEL'B',CAUTION-A/B			
NA01-57-K92	1				
61-829		LABEL,CAUTION			
FB01-61-439B	1				
66-201A		LABEL,BURGLAR ALARM			
FB01-66-201	1				
69-C61		LABEL,UNLEADED FUEL			
UB40-69-C61	1	(W/O AIR BAG)			
UB39-69-C61	1	(W/AIR BAG)			-0401
UB40-69-C61	1	(W/AIR BAG)			0401-
69-D61		LABEL,FUEL WARNING			
KA10-69-D61	1				-9601
69-011		PLATE,MODEL			
8595-69-011B	1				-9508
69-013		LABEL,OIL			
FB01-69-D21A	1				
69-014		LABEL,TIRE			
FB05-69-014A	1	((CPE))(2SEATER))(NO R.SUSP))(A.A.SUS"))			

9508 FC3***-707092
9601 FC3***-708021
0401 FC3***-806597

6930 -2 CAUTION PLATES & LABELS

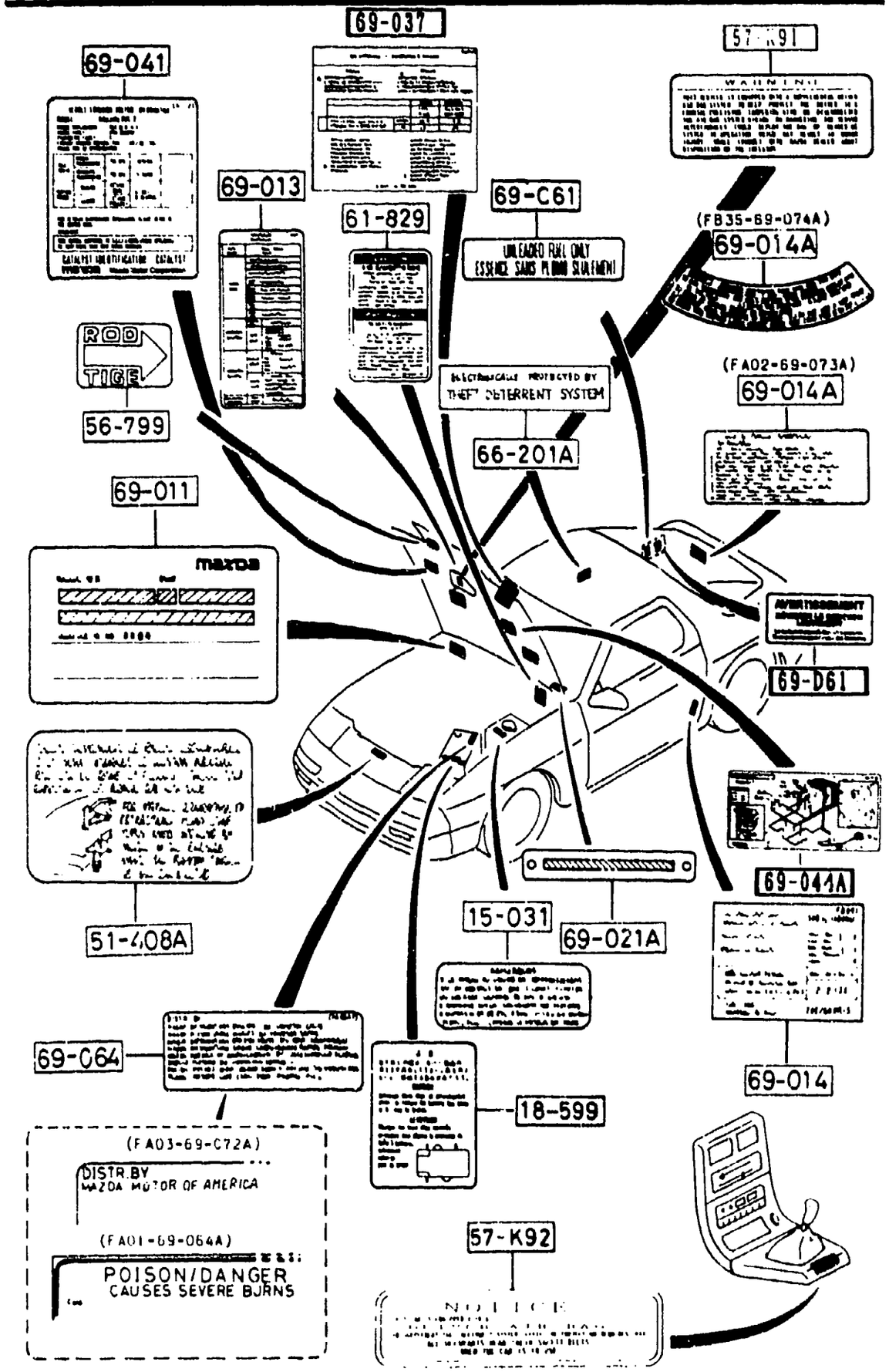

PART NO.	QTY	MODEL/RESTRICTION	MODEL/RESTRICTION	MODEL/RESTRICTION	FROM-TO
CONT'D		(CONVERTIBLE)			
FB09-69-014	1	((CPE))(4SEATER))			
FC01-69-014A	1	((CPE))(2SEATER))(NOR.SUSP))(W/O A.A.SUSP))			
FC17-69-014A	1	((CPE))(2SEATER))(HARD SUSP))			
+69-014A+		LABEL,TEMPORARY TIRE			
FA02-69-073A	1	ENGLISH (HARD SUSP)			
FB35-69-074A	1	ENGLISH (NOR.SUSP)			
+69-021A+		PLATE,CAUTION			
GA02-69-068	1	(W/O AIR BAG)			
NA01-69-068	1	(W/AIR BAG)			
+69-037+		LABEL,FUEL ECONOMY			
N353-69-042	1	(W/FUEL CONSUMPTION LABEL) ((CONVERTIBLE))(W/O AIR BAG)) ((CPE))(NOR.SUSP))			-9701
N373-69-042	1	((CPE))(HARD SUSP))			-9701
N373-69-042A	1	((CPE))(HARD SUSP))			9701-
N353-69-042A (N353-69-042B) A	1				9701-9801
N353-69-042B	1	(W/FUEL CONSUMPTION LABEL) ((CONVERTIBLE))(W/O AIR BAG)) ((CPE))(NOR.SUSP))			9801-
+69-041+		LABEL,EMISSION			
N350-69-036	1	(W/EM LABEL-FED.) (W/O TURBO)			-9701
N351-69-036	1	(W EM LABEL-CALIF.) (W/O TURBO)			-9701
N370-69-036	1	(W EM LABEL-FED.) (TURBO)			-9701
N371-69-036	1	(W EM LABEL-CALIF.) (TURBO)			-9701
N350-69-036A	1	(W/EM LABEL-FED.) (W/O TURBO)			9701-
N351-69-036A	1	(W/EM LABEL-CALIF.)			9701-

9701 FC3***-709151
9801 FC3***-804224

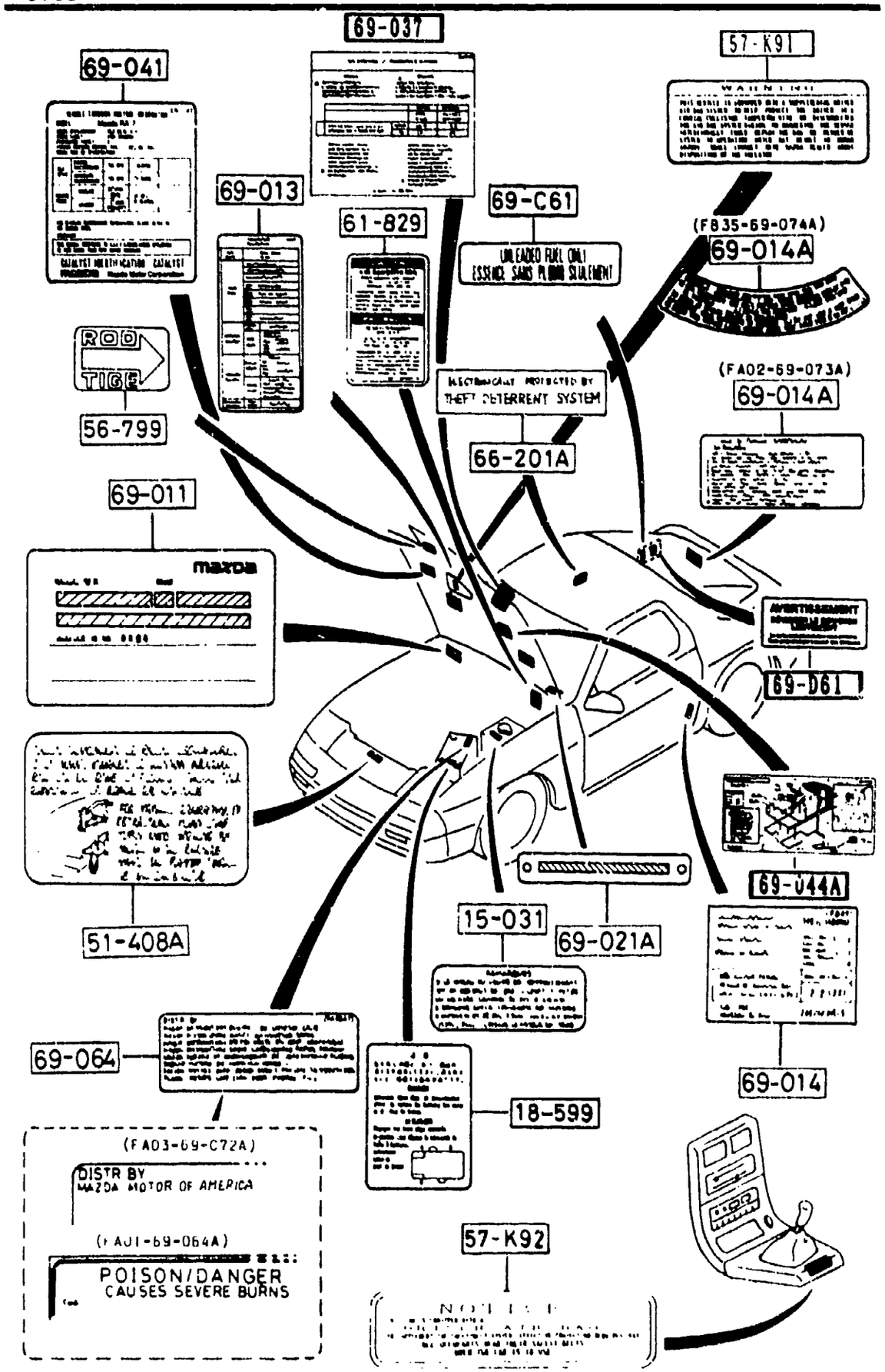

PART NO.	QTY	MODEL/RESTRICTION	MODEL/RESTRICTION	MODEL/RESTRICTION	FROM-TO
CONT'D		(W/O TURBO)			
N370-69-036A	1	(W/EM LABEL-FED.) (TURBO)			9701-
N371-69-036A	1	(W/EM LABEL-CALIF.) (TURBO)			9701-
69-044A		LABEL,VAC.DIAPHRAGM			
N350-69-044A	1	(W/O TURBO)			-9701
N370-69-044A	1	(TURBO)			-9701
N350-69-044B	1	(W/O TURBO)			9701-
N370-69-044B	1	(TURBO)			9701-
69-064		LABEL,BATTERY			
FA01-69-064A	1				
FA03-69-C72 A (FA03-69-C72A)	1				-9728
FA03-69-C72A	1				9728-

9701 FC3####-709151
9728 FC3####-800035
FC3####-800721

7250 QUARTER WINDOW & TRIMS

(CPE)

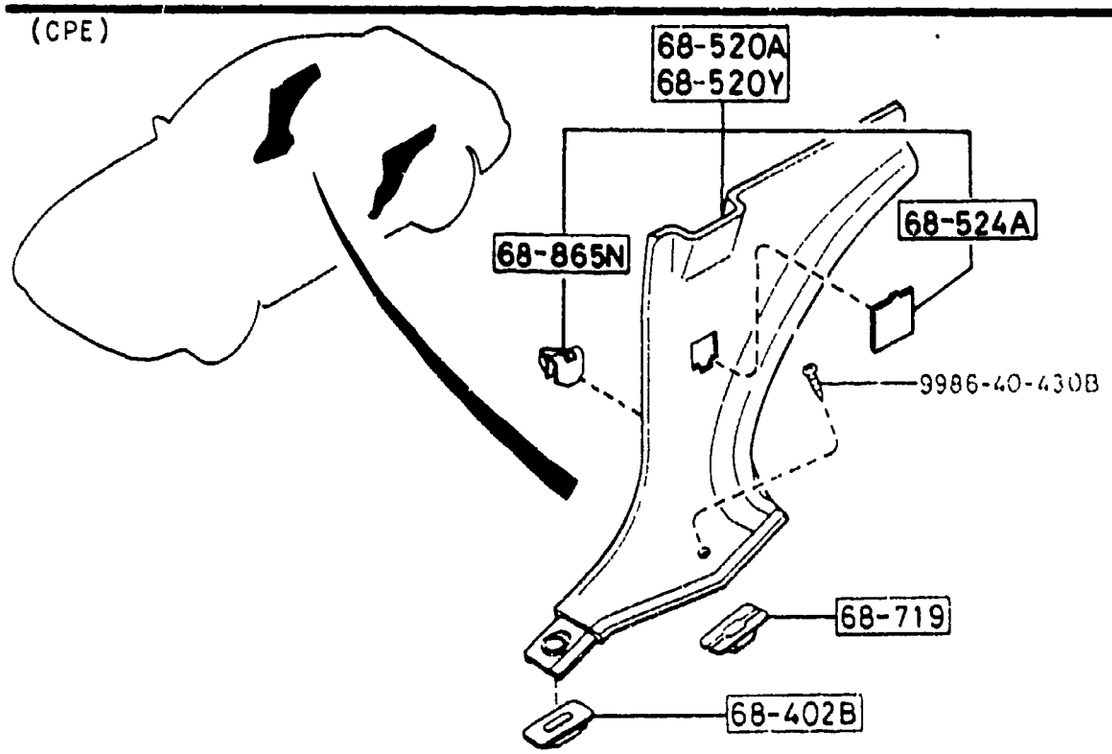

(CONVERTIBLE)

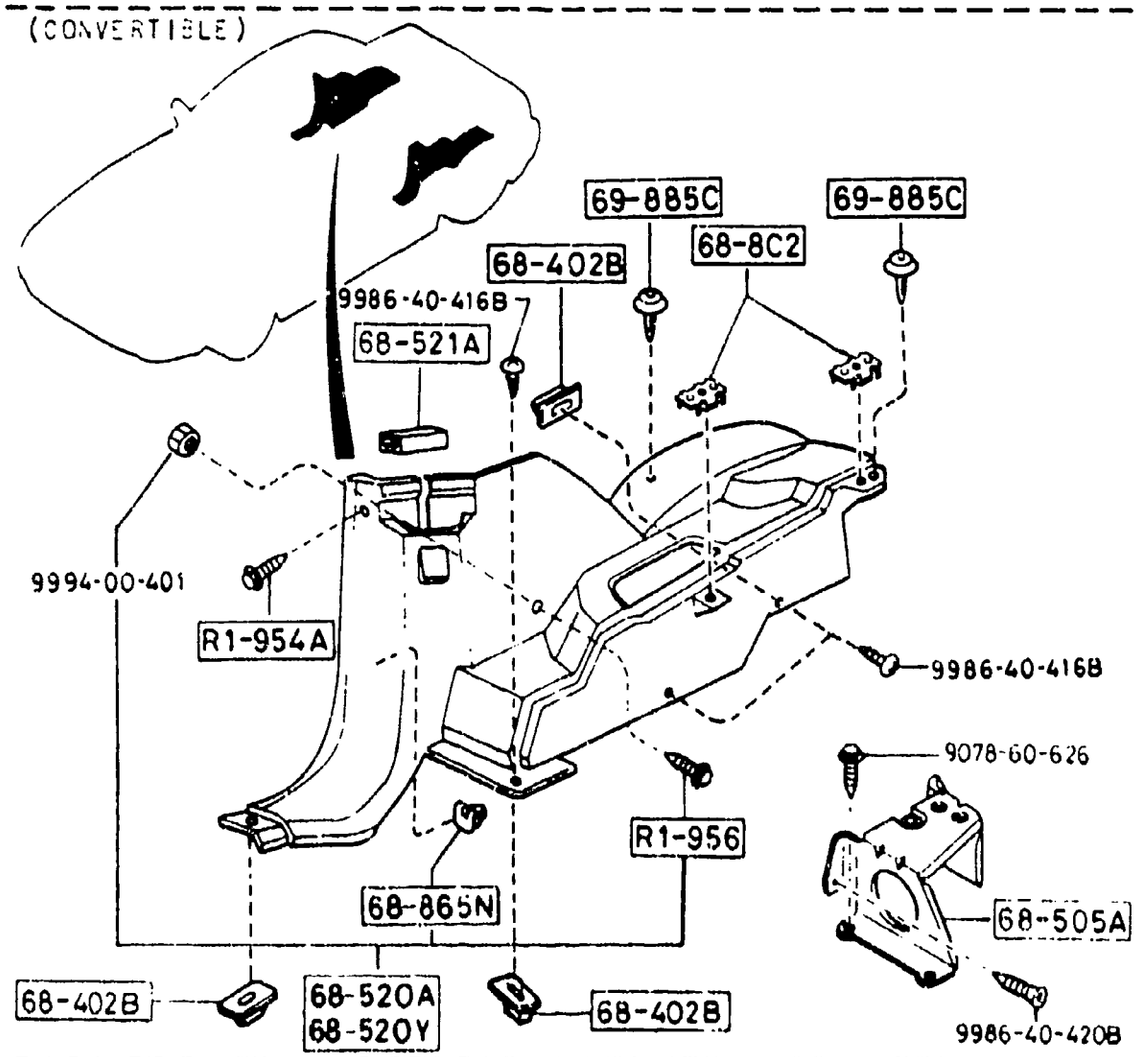

PART NO.	QTY	MODEL/RESTRICTION	MODEL/RESTRICTION	MODEL/RESTRICTION	FROM-TO
R1-954A		HOOK,SCREW-QTR TRIM			
FB67-R1-954A	2	(CONVERTIBLE)			
R1-956		HOOK,SCREW-QTR TRIM			
FB67-R1-956A	2	(CONVERTIBLE)			
68-402B		GROMMET,SCREW			
FA54-68-719B	2	(CPE)			
	8	(CONVERTIBLE)			
68-505A		BRACKET,QUARTER TRIM			
FB67-68-505B	1	(CONVERTIBLE)			
68-520A		TRIM(R),QUARTER			
FB67-68-520E	1	(CONVERTIBLE)			
02		FD8 FE1 BLACK			
48		FD9 BLUE			
FC01-68-520A (FC01-68-520A)	1				-9113
02		FD8 BLACK			
19		FE0 RED			
48		FD9 BLUE			
FC20-68-520A (FC20-68-520A)	1				-9113
02		FD8 BLACK			
19		FE0 RED			
48		FD9 BLUE			
FC01-68-520A	1	((CPE))(2SEATER))			9113-
02		FD8 FE1 BLACK			
19		FE0 RED			
48		FD9 BLUE			
FC20-68-520A	1	((CPE))(4SEATER))			9113-
02		FD8 FE1 BLACK			
19		FE0 RED			
48		FD9 BLUE			
68-520Y		TRIM(L),QUARTER			
FB67-68-550E	1	(CONVERTIBLE)			

9113 FC3####-700067

SECTION NAME INDEX (BODY)2/2

LO.NO	SEC.NO	SECTION NAME
4-C03	6100	HEATER
4-E03	6110	HEATER UNIT COMPONENTS
4-F03	6115	HEATER CONTROLS COMPONENTS
4-G03	6120	HEATER BLOWER COMPONENTS
4-I03	6130	AIR CONDITIONER
4-J03	6230	LIFT GATE MECHANISMS (COUPE)
4-M03	6300	WINDOW GLASSES (COUPE)
4-N03	6300A	WINDOW GLASSES (CONVERTIBLE)
4-C04	6330	SUNROOF (COUPE)
4-G04	6330A	SUNROOF (CONVERTIBLE)
4-M04	6600	SWITCHES & RELAYS (ENGINE)
4-G05	6610	DASHBOARD SWITCHES
4-H05	6611	COMBINATION SWITCH
4-I05	6612	CLUSTER SWITCH
4-L05	6615	POWER WINDOW SWITCHES
4-M05	6630	RELAYS & UNIT (BODY)
4-D06	6635	DOOR SWITCH & HORNS
4-E06	6640	AUTO CRUISE CONTROL SYSTEM
4-F06	6680	AUDIO SYSTEMS (RADIO & TAPE DECK) (COUPE)
4-K06	6680 A	AUDIO SYSTEMS (RADIO & TAPE DECK) (CONVERTIBLE)
4-M06	6682	AUDIO SYSTEMS (ANTENNA & SPEAKER) (COUPE)
4-D07	6682 A	AUDIO SYSTEMS (ANTENNA & SPEAKER) (CONVERTIBLE)
4-G07	6684	AUDIO SYSTEMS(NOISE SUPPRESSOR & EARTH CORD)
4-H07	6700	WIRING HARNESSES(FRONT & REAR)
4-N07	6701	WIRING HARNESSES(ENGINE & T/MISSION)
4-D08	6702	WIRING HARNESSES(DASHBOARD)
4-E08	6703	WIRING HARNESSES(DOOR,FLOOR/CEILING)
4-G08	6704	WIRING HARNESS CLAMPS
4-J08	6720	WINDSHIELD WASHER (1.5L & 2.5L)
4-L08	6720 A	WINDSHIELD WASHER (5.7L)
4-N08	6730	WINDSHIELD WIPERS
4-C09	6740	WIPER MOTOR COMPONENTS(FRONT)
4-D09	6750	WINDOW WIPER & WASHER (REAR)
4-G09	6760	WINDOW WIPER MOTOR COMPONENTS (REAR)
4-H09	6800	CEILING TRIMS (COUPE)
4-J09	6800A	CEILING TRIMS (CONVERTIBLE)
4-K09	6810	ROLLBAR (CONVERTIBLE)
4-N09	6820	PILLAR TRIMS (COUPE)
4-F10	6820A	PILLAR TRIMS (CONVERTIBLE)
4-G10	6840	TRIMS & SCUFF PLATES (COUPE)
4-L10	6840A	TRIMS & SCUFF PLATES (CONVERTIBLE)
4-N10	6845	STRAGE BOX (COUPE) (GXL,TURBO)
4-D11	6860	FLOOR MATS & PADS (COUPE)
4-K11	6860A	FLOOR MATS & PADS (CONVERTIBLE)
4-C12	6870	SERVICE TOOLS
4-D12	6900	VISORS,ASSIST HANDLES & MIRRORS (COUPE)
4-H12	6900A	VISORS,ASSIST HANDLES & MIRRORS (CONVERTIBLE)
4-K12	6930	CAUTION PLATES & LABELS
4-N12	7250	QUARTER WINDOW & TRIMS
4-E13	7800	SPOILERS & RELATED PARTS
4-C14	7900	ACCESSORIES

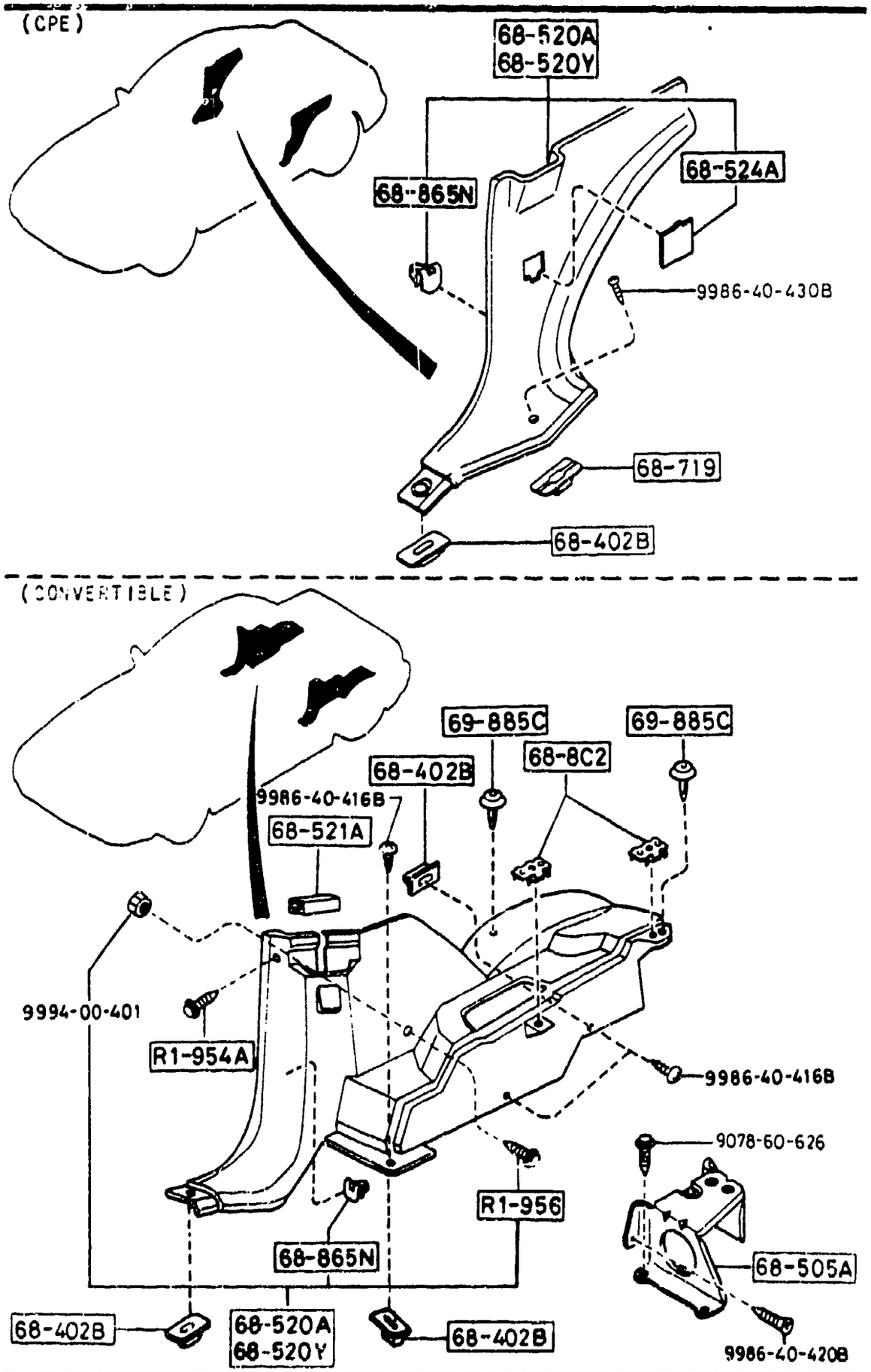

AUFA02

PART NO.	QTY	MODEL/RESTRICTION	MODEL/RESTRICTION	MODEL/RESTRICTION	FROM-TO
CONT'D					
02		FD8 FE1 BLACK			
48		FD9 BLUE			
FC01-68-550A (FC01-68-550A)	1				-9113
02		FD8 BLACK			
19		FE0 RED			
48		FD9 BLUE			
FC20-68-550A (FC20-68-550A)	1				-9113
02		FD8 BLACK			
19		FE0 RED			
48		FD9 BLUE			
FC01-68-550A	1	((CPE))(2SEATER))			9113-
02		FD8 FE1 BLACK			
19		FE0 RED			
48		FD9 BLUE			
FC20-68-550A	1	((CPE))(4SEATER))			9113-
02		FD8 FE1 BLACK			
19		FE0 RED			
48		FD9 BLUE			
68-521A		CLIP,QUATER TRIM			
FB67-68-523	2	(CONVERTIBLE)			
68-524A		COVER,HOLE-QTR TRIM			
FC01-68-524	2	(CPE)			
02		FD8 FE1 BLACK			
19		FE0 RED			
48		FD9 BLUE			
68-719		GROMMET,SCREW			
FB01-68-719	2	(CPE)			
68-8C2		NUT,EXPANSION			
FB67-68-8C2	4	(CONVERTIBLE)			
68-865N		CLIP,TRIM			

9113 FC3####-700067

(CPE)

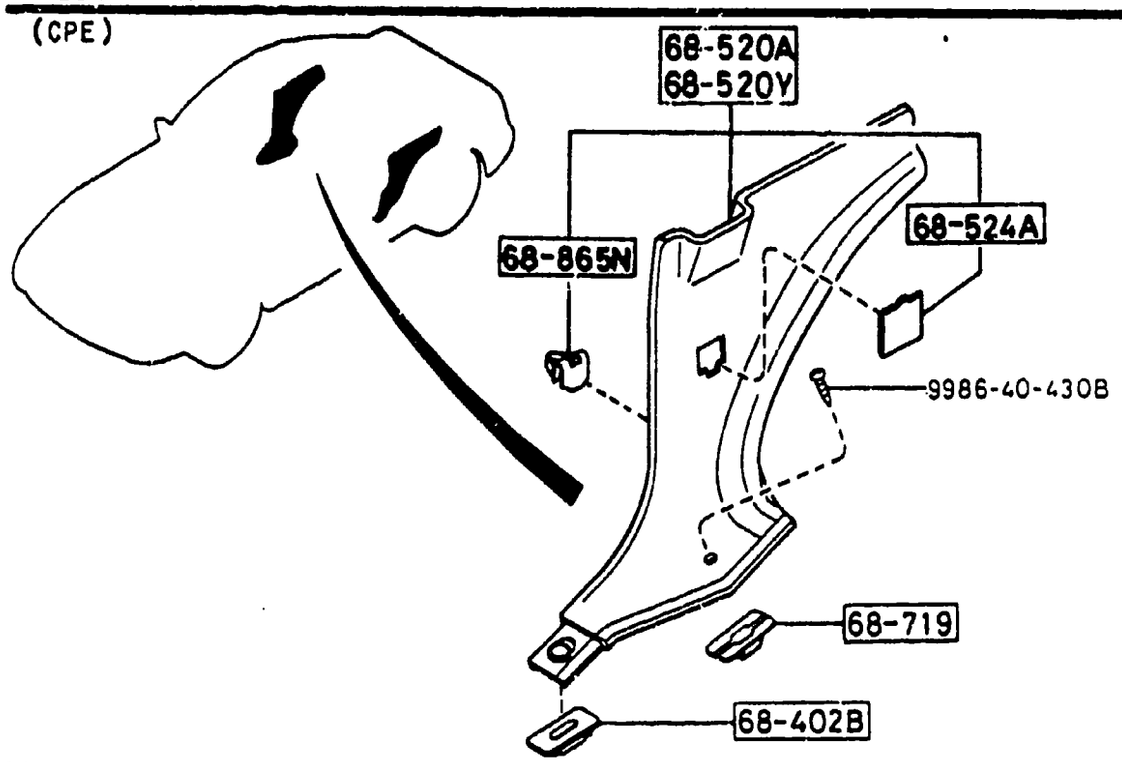

(CONVERTIBLE)

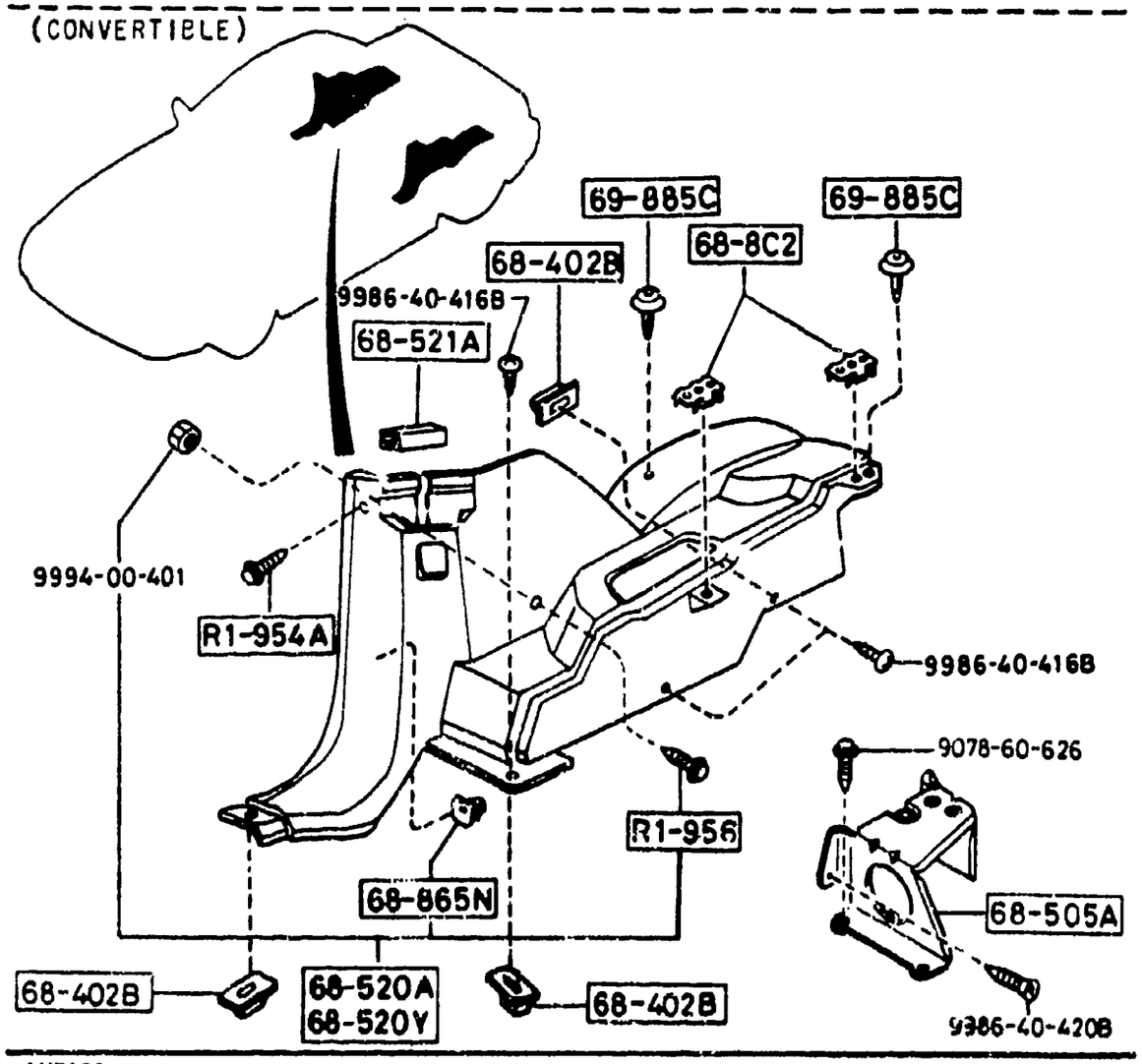

PART NO.	QTY	MODEL/RESTRICTION	MODEL/RESTRICTION	MODEL/RESTRICTION	FROM-TO
CONT'D					
H002-68-865	16				
69-885C		FASTENER			
UB54-68-885	4	(CONVERTIBLE)			
00		FE0 FE1 FD8 BLACK			
48		FD9 BLUE			

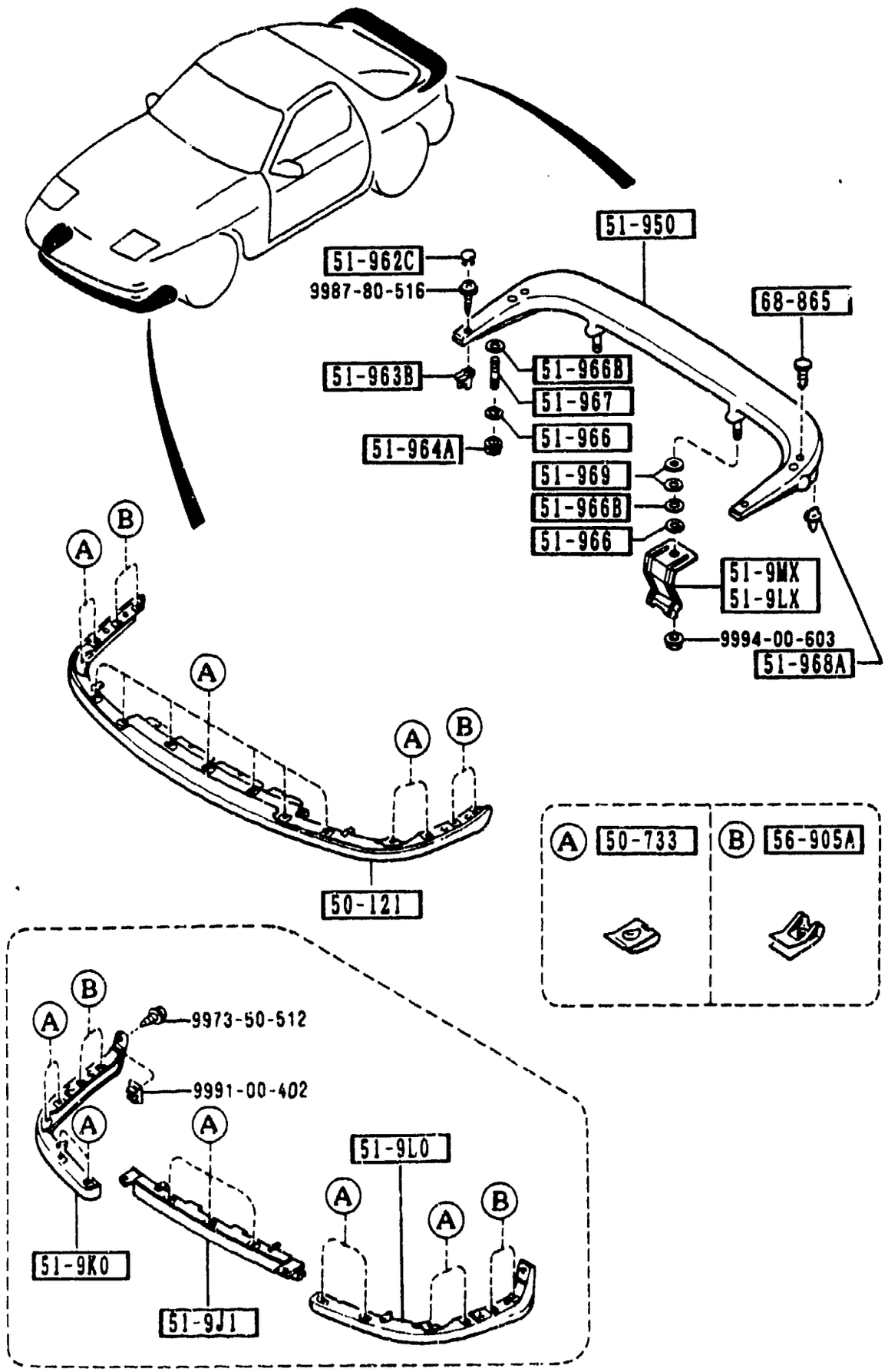

PART NO.	QTY	MODEL/RESTRICTION	MODEL/RESTRICTION	MODEL/RESTRICTION	FROM-TO
50-121		DAM,AIR-SKIRT			
FC17-51-9H0A	1	TURBO, (W/AERO PARTS KIT)			
PZ		PZ BRILLIANT BLACK			
SQ		SQ BLAZE RED			
UC		UC CRYSTAL WHITE			
WY		WY NOBLE WHITE			
1F		1F WINNING SILVER M.			
3G		3G SHADOW SILVER METALL			
5D		5D HARBOR BLUE M.			
6H		6H MELLOW BURGUNDY MC			
50-733		NUT,SPRING-AIR DAM S KIRT			
FB01-50-733	11				
51-9J1		DAM(C),AIR-SKIRT			
FC01-51-9J1A	1				
51-9K0		SKIRT(R),FRONT AIR D AM			
FC01-51-9K1A	1				
51-9LX		STIFFNER(L),REAR SPO ILER			
FB02-51-9LXB	1	GTU-OPT, GTUS, GXL, TURBO, (W/RR SPOILER) (CPE)			
51-9L0		SKIRT(L),FRONT AIR D AM			
FC01-51-9L1A	1				
51-9MX		STIFFNER(R),REAR SPO ILER			
FB02-51-9MXB	1	GTU-OPT, GTUS, GXL, TURBO, (W/RR SPOILER) (CPE)			
51-950		SPOILER,REAR			
FC17-51-961	1	GTU-OPT, GTUS, GXL, TURBO, (W/RR SPOILER) (CPE)			-9901
PZ		PZ BRILLIANT BLACK			

9901 FC3####-802200

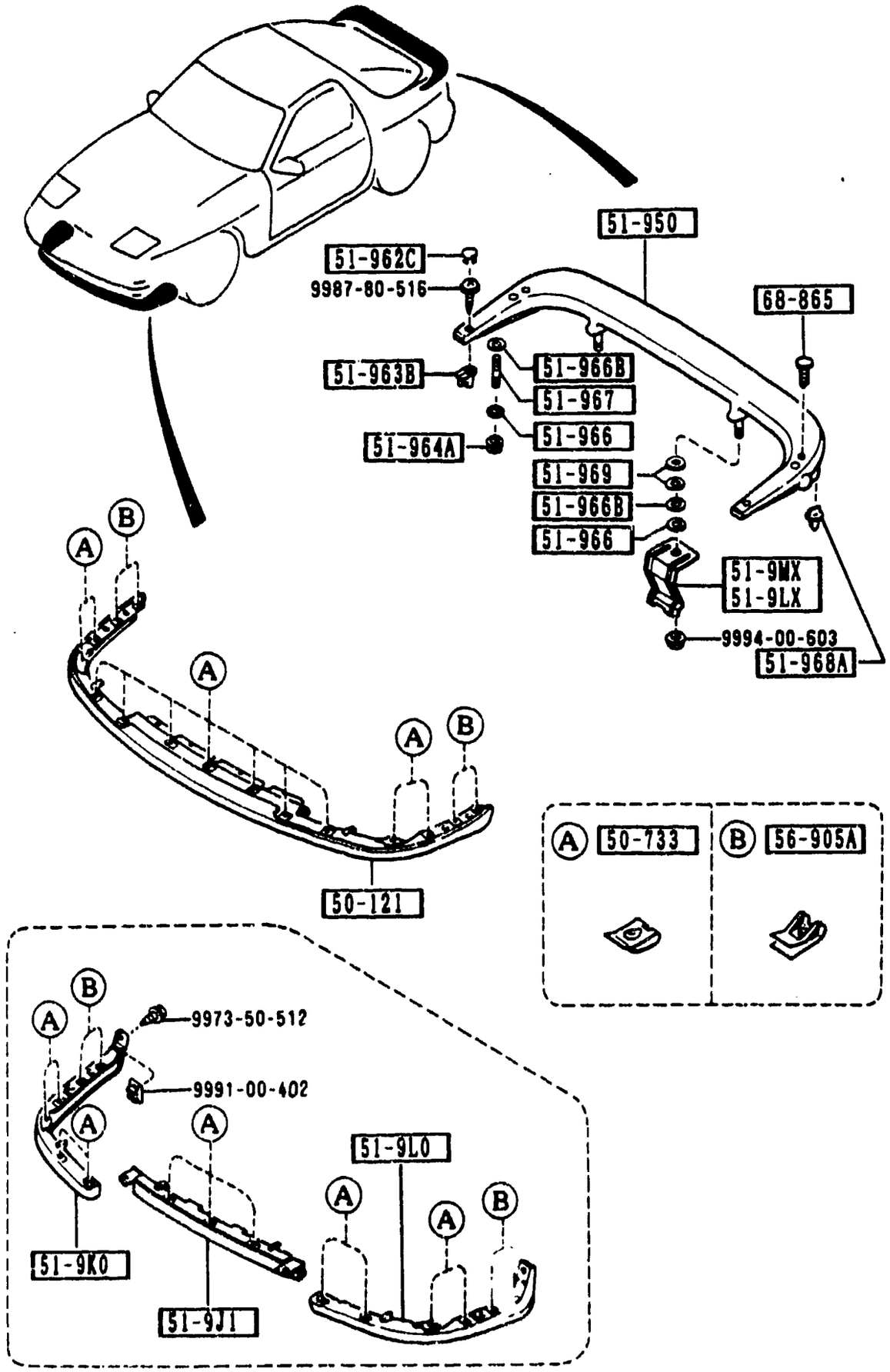

PART NO.	QTY	MODEL/RESTRICTION	MODEL/RESTRICTION	MODEL/RESTRICTION	FROM-TO
CONT'D					
SQ		SQ BLAZE RED			
UC		UC CRYSTAL WHITE			
WY		WY NOBLE WHITE			
1F		1F WINNING SILVER M.			
3G		3G SHADOW SILVER METALL			
5D		5D HARBOR BLUE ..			
6H		6H MELLOW BURGUNDY MC			
FC17-51-960A	1	GTU-OPT, GTUS, GXL, TURBO, (W/RR SPOILER) (CPE)			9901-
PZ		PZ BRILLIANT BLACK			
SQ		SQ BLAZE RED			
UC		UC CRYSTAL WHITE			
1F		1F WINNING SILVER M.			
3G		3G SHADOW SILVER METALL			
5D		5D HARBOR BLUE M.			
51-962C		CAP,REAR SPOILER			
FB03-51-962	2	GTU-OPT, GTUS, GXL, TURBO, (W/RR SPOILER) (CPE)			
PZ		PZ BRILLIANT BLACK			
SQ		SQ BLAZE RED			
UC		UC CRYSTAL WHITE			
WY		WY NOBLE WHITE			
1F		1F WINNING SILVER M.			
3G		3G SHADOW SILVER METALL			
5D		5D HARBOR BLUE M.			
6H		6H MELLOW BURGUNDY MC			
51-963B		GROMMET,SCREW-REAR SPOILER			
FB02-51-963A	2	GTU-OPT, GTUS, GXL, TURBO, (W/RR SPOILER) (CPE)			

9901 FC3###-802200

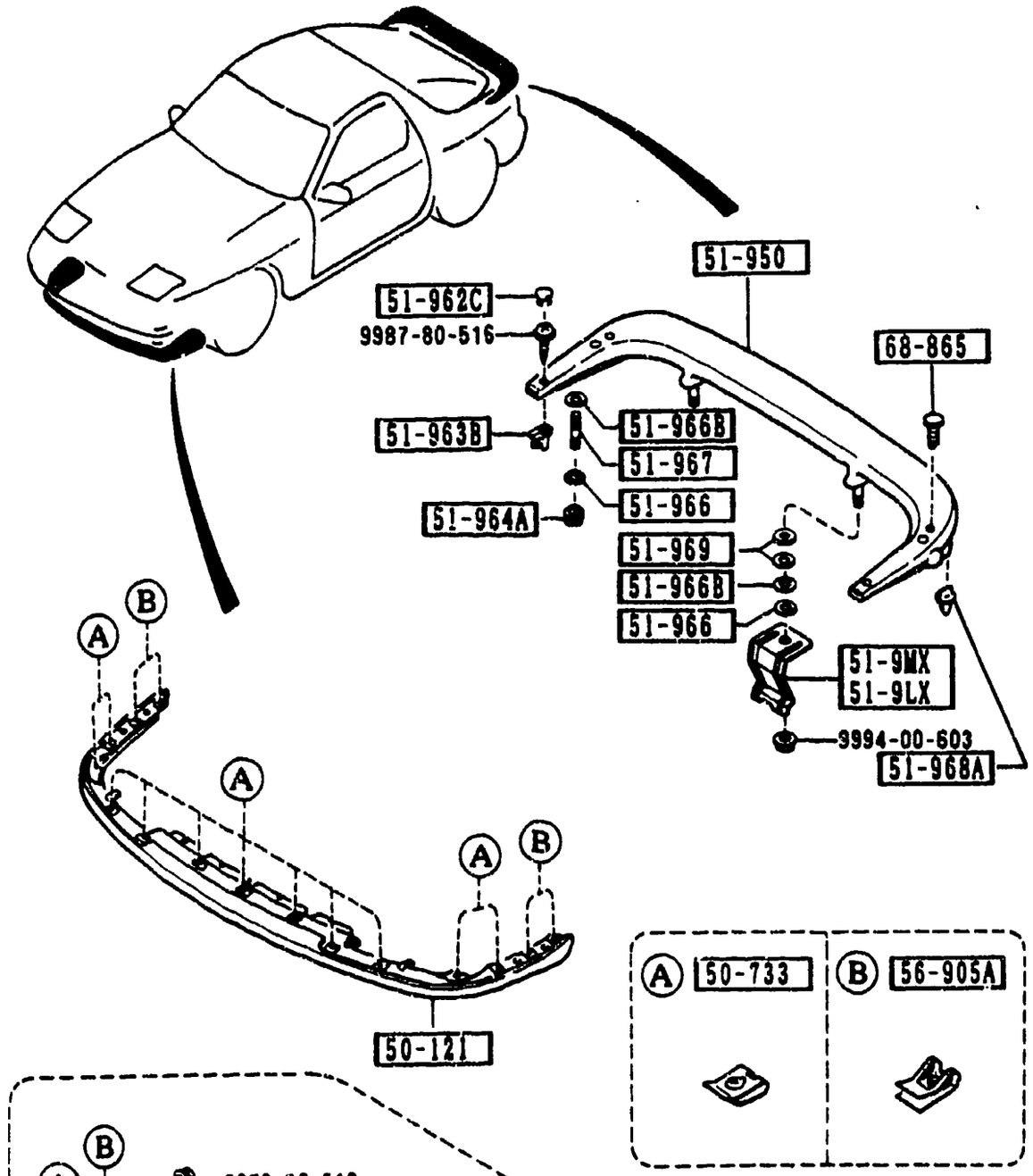

PART NO.	QTY	MODEL/RESTRICTION	MODEL/RESTRICTION	MODEL/RESTRICTION	FROM-TO
51-964A		NUT,CAP-REAR SPOILER			
FB02-51-964A	2	GTU-OPT, GTUS, GXL, TURBO, (W/RR SPOILER) (CPE)			
51-966		PROTECTOR			
FB01-51-966B	4	GTU-OPT, GTUS, GXL, TURBO, (W/RR SPOILER) (CPE)			
51-966B		GASKET,SPOILER			
FB02-51-966	4	GTU-OPT, GTUS, GXL, TURBO, (W/RR SPOILER) (CPE)			9901-
51-967		BOLT			
FC17-51-967	2	GTU-OPT, GTUS, GXL, TURBO, (W/RR SPOILER) (CPE)			-9901
51-968A		CLIP			
FC17-51-968	2	GTU-OPT, GTUS, GXL, TURBO, (W/RR SPOILER) (CPE)			
51-969		PROTECTOR,RR SPOILER -CTR			
FC17-51-969	4	GTU-OPT, GTUS, GXL, TURBO, (W/RR SPOILER) (CPE)			9901-
56-905A		NUT,SPRING			
W023-60-122	4				
68-865		FASTENER			
G045-68-865	2	GTU-OPT, GTUS, GXL, TURBO, (W/RR SPOILER) (CPE)			
00		FE0 FD8 FD9 BLACK			

9901 FC3###-802200

SECTION NAME INDEX (BODY)2/2

LO.NO	SEC.NO	SECTION NAME
4-C03	6100	HEATER
4-E03	6110	HEATER UNIT COMPONENTS
4-F03	6115	HEATER CONTROLS COMPONENTS
4-G03	6120	HEATER BLOWER COMPONENTS
4-I03	6130	AIR CONDITIONER
4-J03	6230	LIFT GATE MECHANISMS (COUPE)
4-M03	6300	WINDOW GLASSES (COUPE)
4-N03	6300A	WINDOW GLASSES (CONVERTIBLE)
4-C04	6330	SUNROOF (COUPE)
4-G04	6330A	SUNROOF (CONVERTIBLE)
4-M04	6600	SWITCHES & RELAYS (ENGINE)
4-G05	6610	DASHBOARD SWITCHES
4-H05	6611	COMBINATION SWITCH
4-I05	6612	CLUSTER SWITCH
4-L05	6615	POWER WINDOW SWITCHES
4-M05	6630	RELAYS & UNIT (BODY)
4-D06	6635	DOOR SWITCH & HORNS
4-E06	6640	AUTO CRUISE CONTROL SYSTEM
4-F06	6680	AUDIO SYSTEMS (RADIO & TAPE DECK) (COUPE)
4-K06	6680 A	AUDIO SYSTEMS (RADIO & TAPE DECK) (CONVERTIBLE)
4-M06	6682	AUDIO SYSTEMS (ANTENNA & SPEAKER) (COUPE)
4-D07	6682 A	AUDIO SYSTEMS (ANTENNA & SPEAKER) (CONVERTIBLE)
4-G07	6684	AUDIO SYSTEMS(NOISE SUPPRESSOR & EARTH CORD)
4-H07	6700	WIRING HARNESSES(FRONT & REAR)
4-N07	6701	WIRING HARNESSES(ENGINE & T/MISSION)
4-D08	6702	WIRING HARNESSES(DASHBOARD)
4-E08	6703	WIRING HARNESSES(DOOR,FLOOR/CEILING)
4-G08	6704	WIRING HARNESS CLAMPS
4-J08	6720	WINDSHIELD WASHER (1.5L & 2.5L)
4-L08	6720 A	WINDSHIELD WASHER (5.7L)
4-N08	6730	WINDSHIELD WIPERS
4-C09	6740	WIPER MOTOR COMPONENTS(FRONT)
4-D09	6750	WINDOW WIPER & WASHER (REAR)
4-G09	6760	WINDOW WIPER MOTOR COMPONENTS (REAR)
4-H09	6800	CEILING TRIMS (COUPE)
4-J09	6800A	CEILING TRIMS (CONVERTIBLE)
4-K09	6810	ROLLEBAR (CONVERTIBLE)
4-N09	6820	PILLAR TRIMS (COUPE)
4-F10	6820A	PILLAR TRIMS (CONVERTIBLE)
4-G10	6840	TRIMS & SCUFF PLATES (COUPE)
4-L10	6840A	TRIMS & SCUFF PLATES (CONVERTIBLE)
4-N10	6845	STRAGE BOX (COUPE) (GXL,TURBO)
4-D11	6860	FLOOR MATS & PADS (COUPE)
4-K11	6860A	FLOOR MATS & PADS (CONVERTIBLE)
4-C12	6870	SERVICE TOOLS
4-D12	6900	VISORS,ASSIST HANDLES & MIRRORS (COUPE)
4-H12	6900A	VISORS,ASSIST HANDLES & MIRRORS (CONVERTIBLE)
4-K12	6930	CAUTION PLATES & LABELS
4-N12	7250	QUARTER WINDOW & TRIMS
4-E13	7800	SPOILERS & RELATED PARTS
4-C14	7900	ACCESSORIES

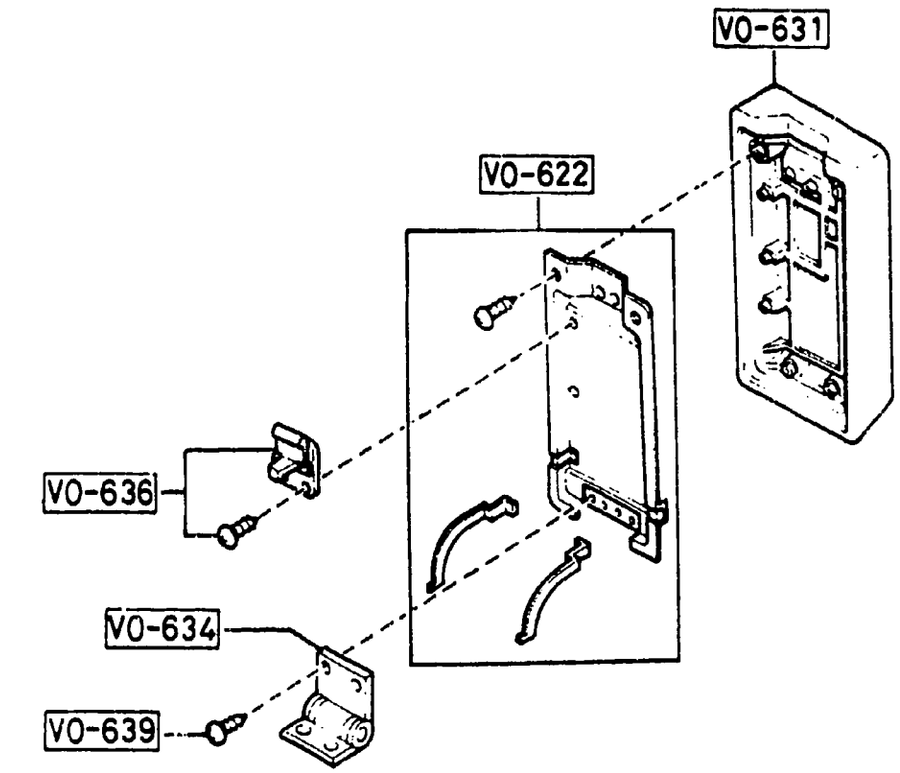

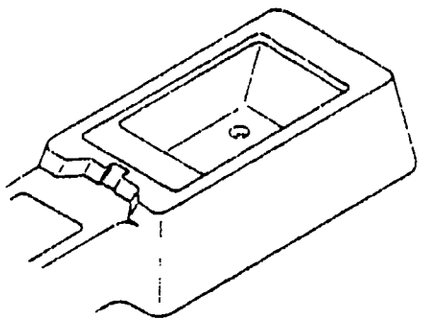

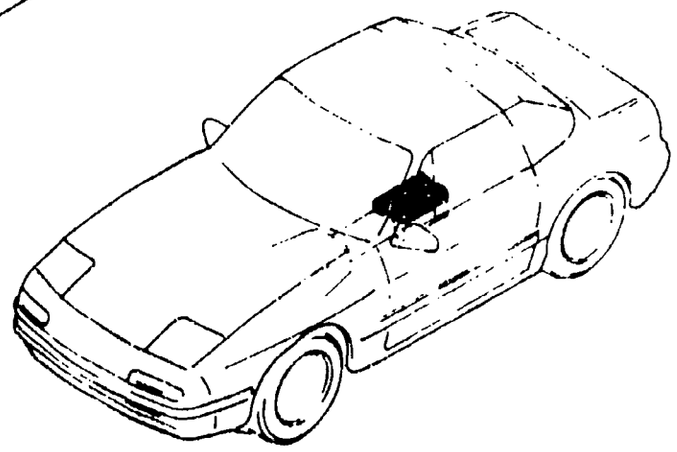

PART NO.	QTY	MODEL/RESTRICTION	MODEL/RESTRICTION	MODEL/RESTRICTION	FROM-TO
V0-622		LID,INNER			
FB01-V0-622	1	(CONVERTIBLE)			
V0-631		LID,OUTER			
FB01-V0-631	1	(CONVERTIBLE)			
0F		BLACK			
5F		BLUE			
V0-634		HINGE			
FB01-V0-634	1	(CONVERTIBLE)			
0F		BLACK			
5F		BLUE			
V0-636		LOCK PLATE			
FB01-V0-636	1	(CONVERTIBLE)			
V0-639		SCREW			
FB01-V0-639	1	(CONVERTIBLE)			