# Parts Catalog

## Mazda RX-7
## U.S.A.
## ('91► '92)

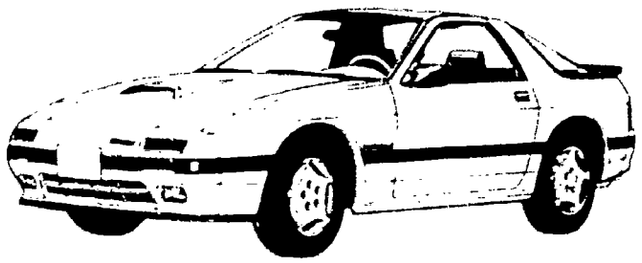

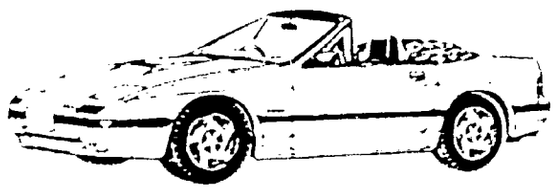

FC3• • • -900001~950000
FC35• -100001~200000

**Jan.'94 (FINAL)**

Catalog no. AU-FA03-07

mazda

1994 Mazda Motor Corporation

3-B 1

### LAYOUT OF CONTENTS / DISPOSITION TYPOGRAPHIQUE DE CONTENU / DISPOSICION DEL CONTENIDO / ANORDNUNG DES INHALTS

- The following is a typical example of the layout of contents on Mazda microfiche parts catalog
- Voici un exemple typique de la disposition typographique de contenu dans les microfiches de catalogue des pièces de Mazda
- El siguiente es un ejemplo típico de la disposición del contenido en una microficha del catálogo de repuestos de Mazda.
- Folgendes ist ein typisches Beispiel der Inhaltsanordnung des Mazda Mikrofiche Teilekatalogs

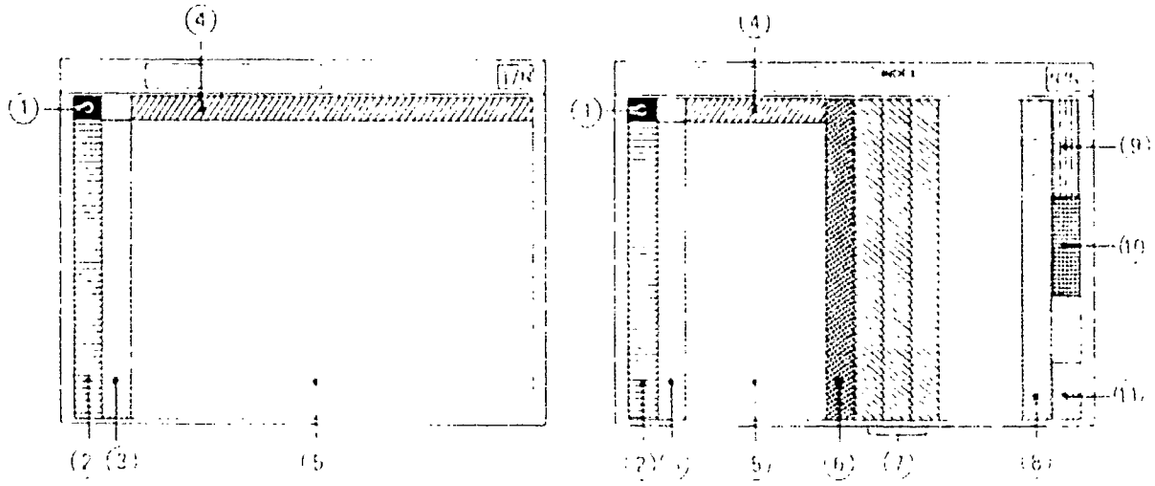


**Remark :** The items listed under ④ have been deleted from each fiche since Dec. '93

① • Layout of contents
• Disposition Typographique de Contenu
• Disposición del contenido
• Anordnung des Inhalts

② • Pictorial Index
• Index par Schémas
• Indice Gráfico
• Illustrierter Index

③ • Master Section No. Index
• Index des Numéros des Sections Totale
• Indice del Número de la Sección Maéstra
• Hauptabschnittsnummer Index

④ • Section No. Index for the Column
• Index des Numéros des Sections pour les Colonnes
• N° de la Section para el Indice
• Abschnittsnummer-Index für die Spalte

⑤ • Illustration & Text
• Illustrations et Textes
• Ilustración y Texto
• Abbildung und Text

⑥ • Part No. Index
• Index des Numéros des Pièces
• Indice del N° de Pieza
• Teile Nr. Index

⑦ • Alphabetical Index
• Index Alphabétique
• Indice Alfabético
• Alphabetischer Index

⑧ • Model Identification
• Identification des Modèles
• Identificación del Modelo
• Modell Kennzeichnung

⑨ • Vehicle Identification System
• Système d'Identification de Véhicule
• Sistema de Identificación de Vehículo
• Fahrzeug Identifikations System

# PICTORIAL INDEX

## ENGINE (1/2)

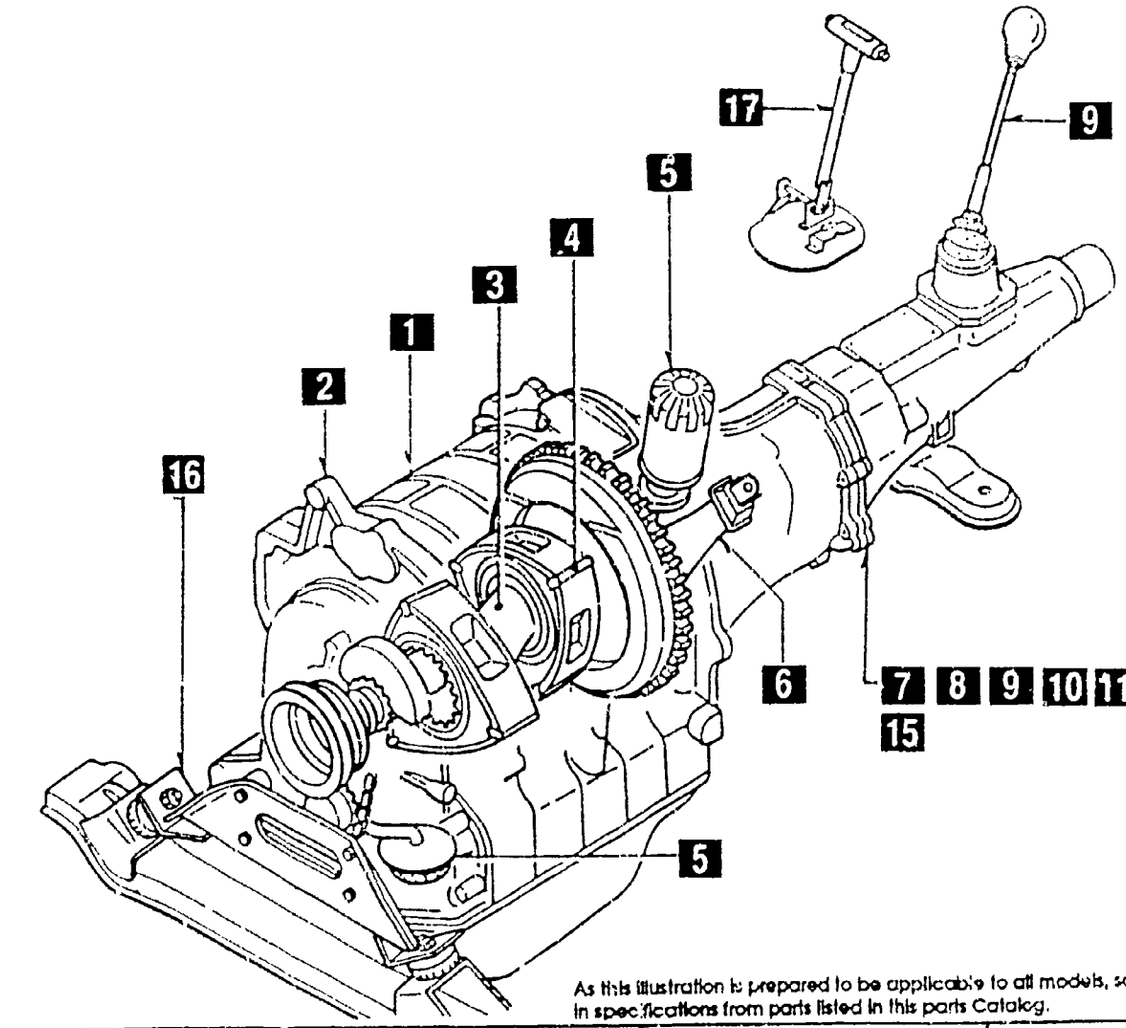


As this illustration is prepared to be applicable to all models, some parts are different in specifications from parts listed in this parts Catalog.

**1000**

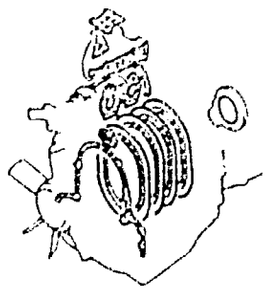

SHORT ENGINE & GASKET SETS

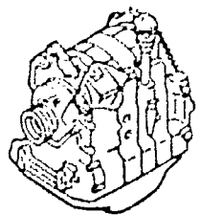

**1 1030**

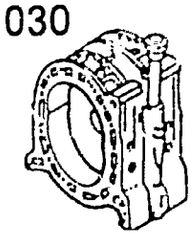

ROTOR HOUSINGS

**2 1040**

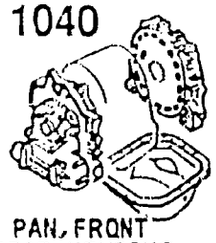

OIL PAN, FRONT & REAR HOUSING

**3 1100**

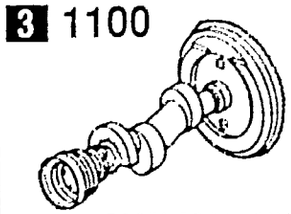

ECCENTRIC SHAFT & FLYWHEEL

**4 1110**



ROTORS & RELATED PARTS

**5 1400**

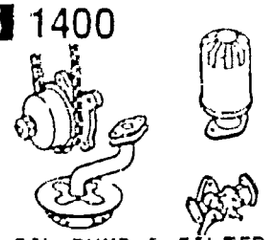

OIL PUMP & FILTER

**6 1600**

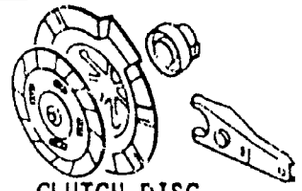

CLUTCH DISC & COVER (MANUAL)

**7 1700**

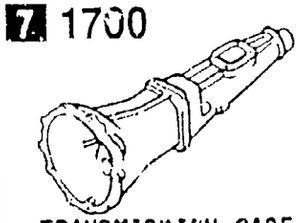

TRANSMISSION CASE (MANUAL)

**8 1710**

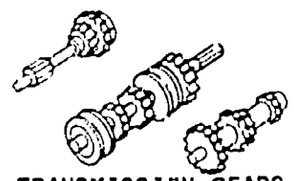

TRANSMISSION GEARS (MANUAL)

**9 1720**

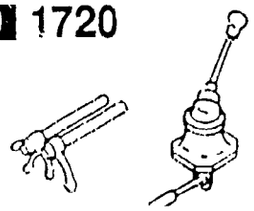

CHANGE CONTROL SYSTEM (MANUAL)

**10 1910**

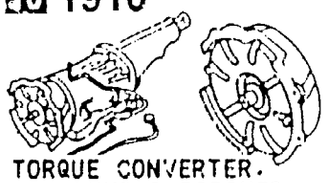

TORQUE CONVERTER, OIL PUMP & PIPINGS (AUTOMATIC)

**11 1920 & 1925**

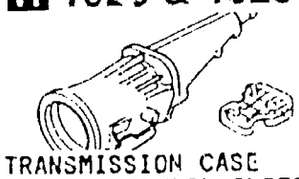

TRANSMISSION CASE & MAIN CONTROL SYSTEM (AUTOMATIC)

**12 1930**

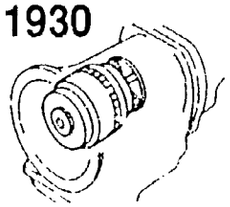

CLUTCHES & PLANETARY GEARS (AUTOMATIC)

**13 1940**

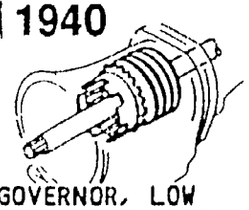

GOVERNOR, LOW & REVERSE PISTON (AUTOMATIC)

**14 1950**

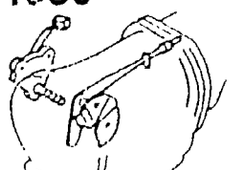

MANUAL LINKAGE SYSTEM (AUTOMATIC)

**15 1960**

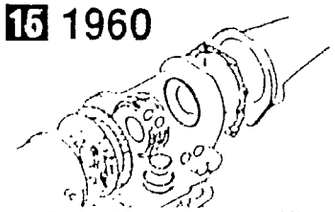

GASKET & SEAL KIT (AUTOMATIC)

**16 3900**

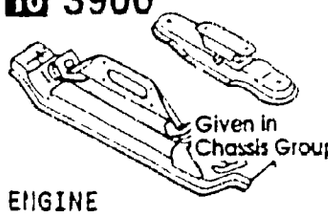


ENGINE & T/MISSION MOUNTINGS

**17 4600**

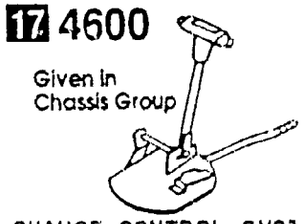


CHANGE CONTROL SYSTEM (AT)

# PICTORIAL INDEX

## ENGINE (2/2)

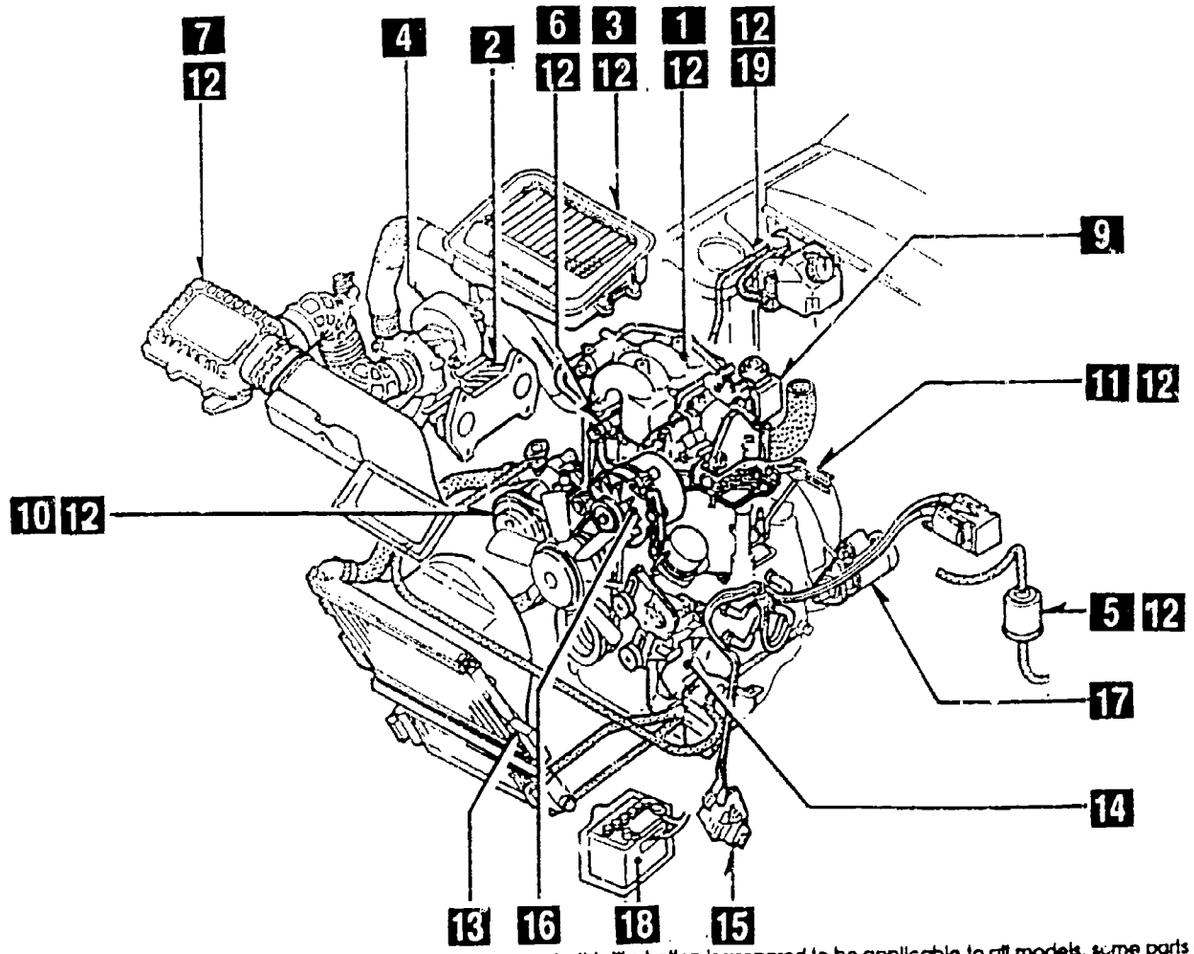


As this illustration is prepared to be applicable to all models, some parts are different in specifications from parts listed in this parts C atalog.

**1** 1300

INLET MANIFOLD

**2** 1310
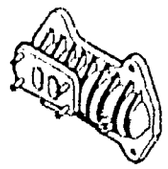
EXHAUST MANIFOLD

**3** 1311

INTER COOLER

**4** 1312
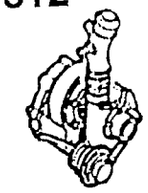
TURBO CHARGER

**5** 1320

FUEL SYSTEM

**6** 1325
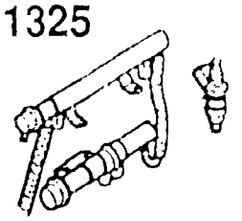
FUEL DISTRIBUTOR

**7** 1330
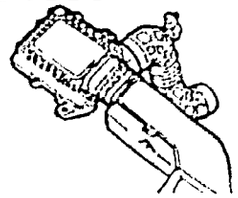
AIR CLEANER

**8**

**9** 1364
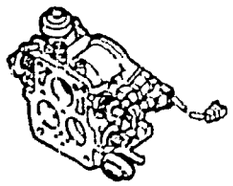
THROTTLE BODY

**10** 1371
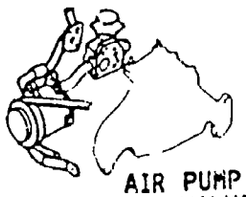
AIR PUMP & AIR CONTROL VALVE

**11** 1380
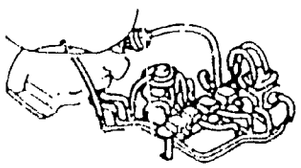
EMISSION CONTROL SYSTEM

**12** 1399
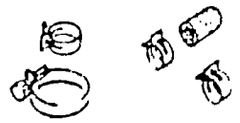
CAP & HOSE CLIP (INLET & EXHAUST SIDE)

**13** 1500
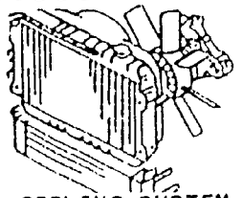
COOLING SYSTEM

**14** 1580
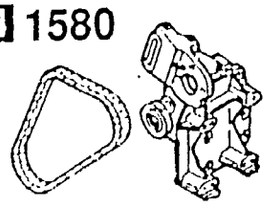
BRACKET, PULLEY & BELT

**15** 1800
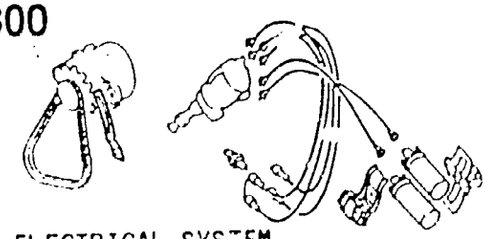
ENGINE ELECTRICAL SYSTEM

**16** 1830
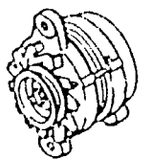
ALTERNATOR

**17** 1840
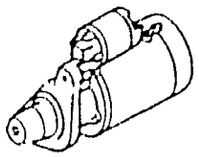
STARTER

**18** 1850
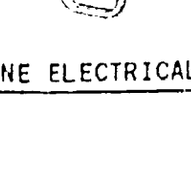
BATTERY

**19** 1350
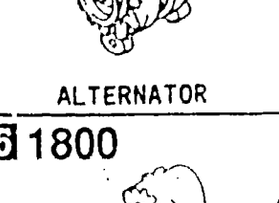
STARTING ASSIST SYSTEM

# PICTORIAL INDEX

# CHASSIS (1/2)

**1** 2505

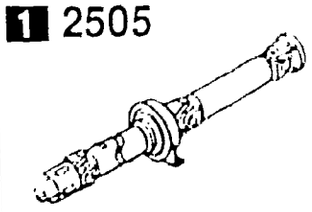

REAR PROPELLER SHAFT

**2** 2550

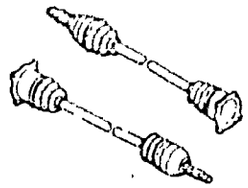

REAR DRIVE SHAFT

2600

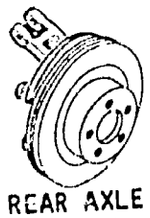

REAR AXLE

**3** 2610



REAR BRAKE MECHANISMS

**4** 2710

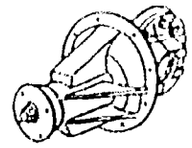

REAR DIFFERENTIALS

**5** 2800 & 2810

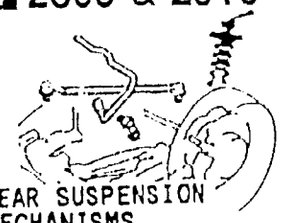

REAR SUSPENSION MECHANISMS

2801

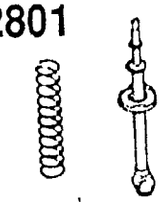

REAR SPRING & DAMPER

2830

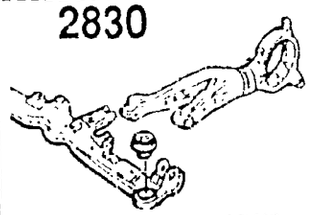

REAR LOWER ARMS & SUB FRAME

**6** 3200



STEERING WHEEL

**7** 3210

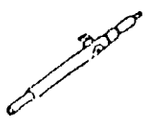

STEERING COLUMN & SHAFTS

**8** 3220

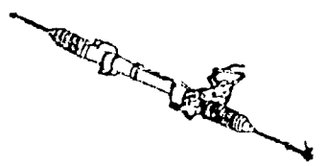

STEERING GEAR

**9** 3240

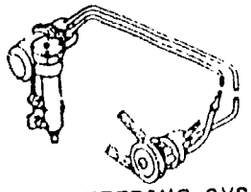

POWER STEERING SYSTEM

**10** 3300

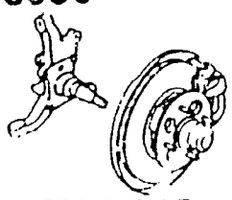

FRONT AXLE

**11** 3310



FRONT BRAKE MECHANISMS

3400

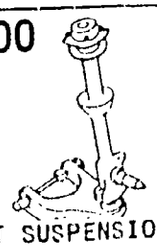

FRONT SUSPENSION MECHANISMS

**12** 3401

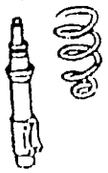

FRONT SPRING & DAMPER

**13** 3410

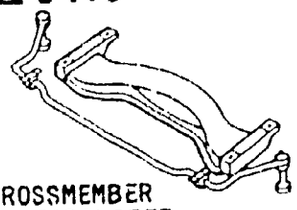

CROSSMEMBER & STABILIZER

**14** 3900

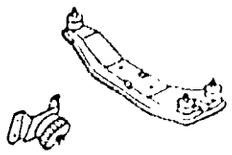

ENGINE & T/MISSION MOUNTINGS

**15** 4000

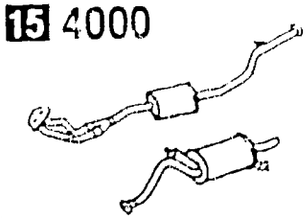

EXHAUST SYSTEM

**16** 4600

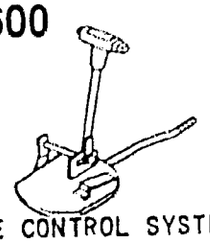

CHANGE CONTROL SYSTEM (AT)

**17** 1720

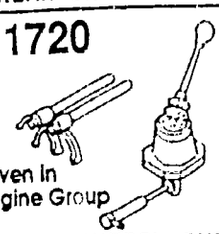


CHANGE CONTROL SYSTEM (MANUAL)

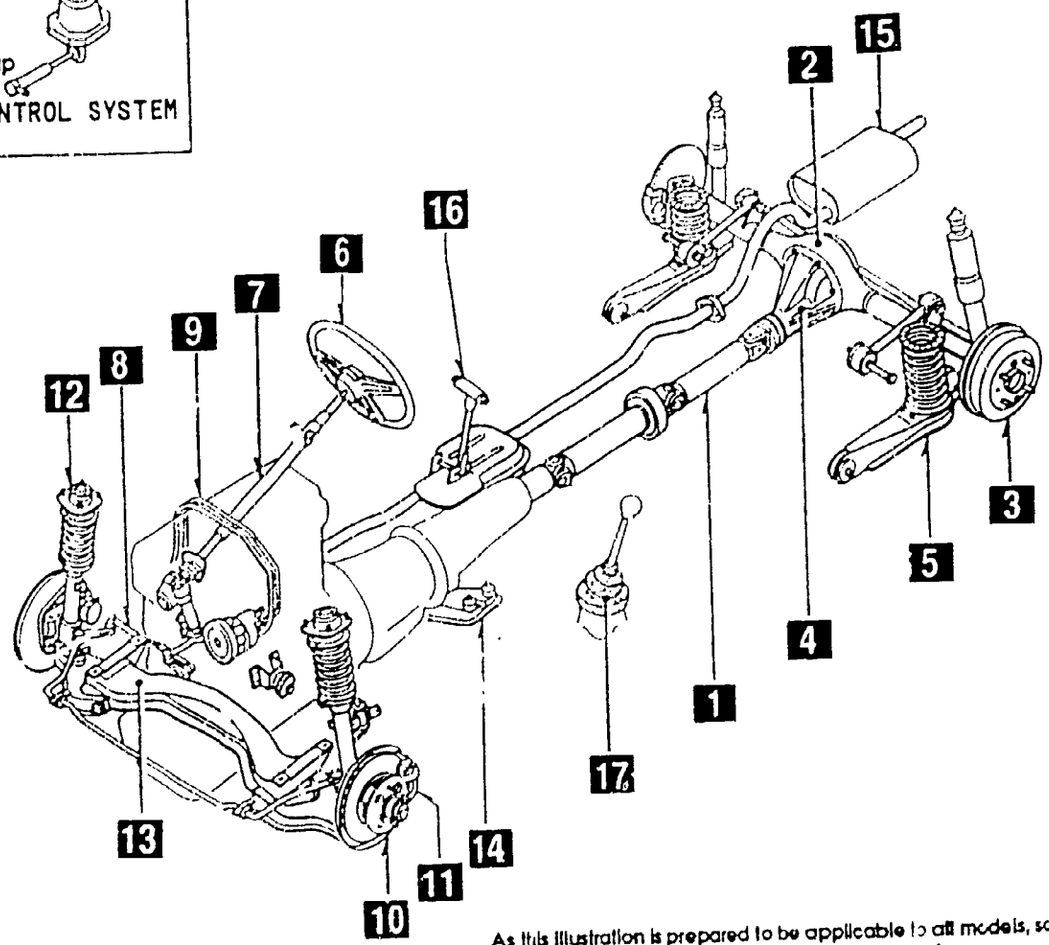


As this illustration is prepared to be applicable to all models, some parts are different in specifications from parts listed in this parts Catalog.

# PICTORIAL INDEX

**1** 3700

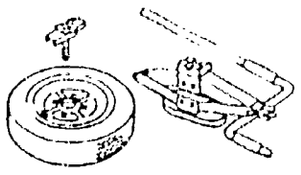

TIRES & JACK

**2** 4140



CLUTCH RELEASE & MASTER CYLINDERS (MANUAL TRANSMISSION)

4145

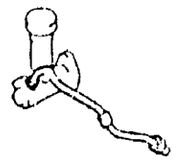

CLUTCH PIPINGS (MANUAL TRANSMISSION)

**3** 4160



ACCELERATOR CONTROL SYSTEM

**4** 4200

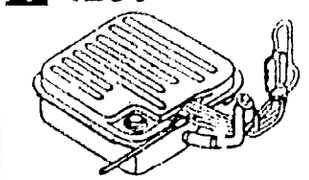

FUEL TANK

**5** 4300

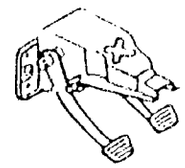

CLUTCH & BRAKE PEDALS

# CHASSIS (2/2)

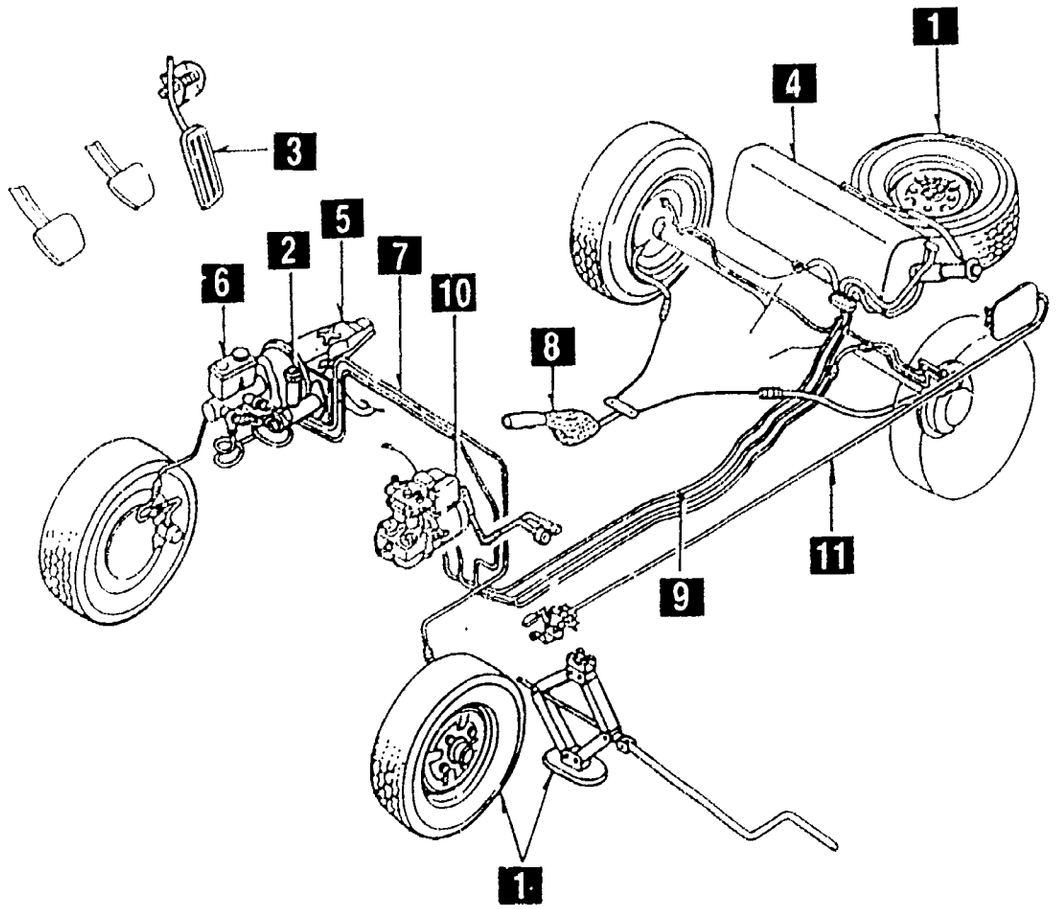


As this illustration is prepared to be applicable to all models, some parts are different in specifications from parts listed in this parts Catalog.

**6** 4340

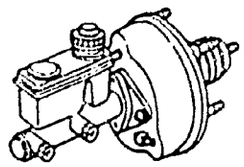

BRAKE MASTER CYLINDER & POWER BRAKE

**7** 4360

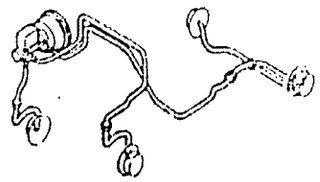

BRAKE PIPINGS

**8** 4400

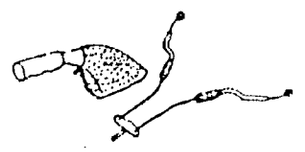

PARKING BRAKE SYSTEM

**9** 4500

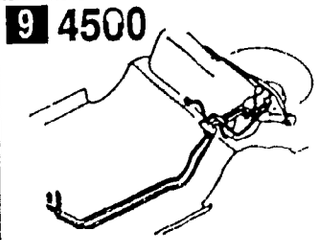

FUEL PIPINGS

**11** 4210

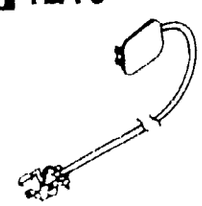

FUEL LID OPENER

**10** 4370

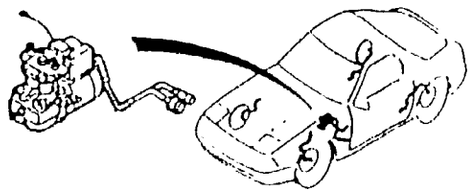

ANTILOCK BRAKE SYSTEM

# PICTORIAL INDEX

**1** 0900

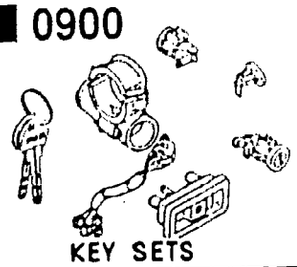

KEY SETS

**2** 5020

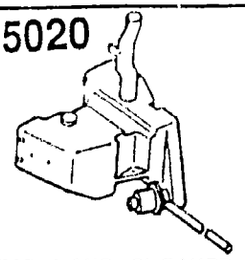

HEAD LAMP CLEANER

**3** 5100

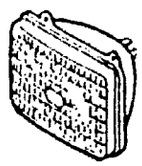

HEAD LAMPS

**4** 5103

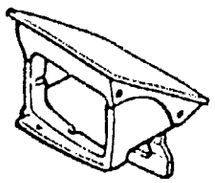

HEAD LAMP RETRACTORS

**5** 5105

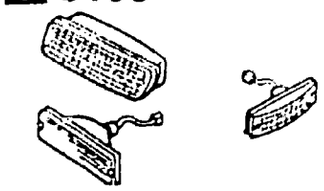

FRONT COMBINATION LAMPS

**6** 5110

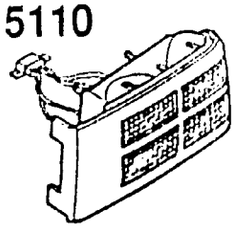

REAR COMBINATION LAMPS

**19** 6704

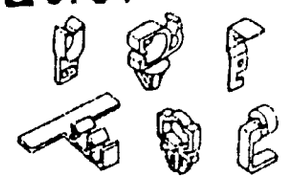

WIRING HARNESS CLAMPS

**20** 6720

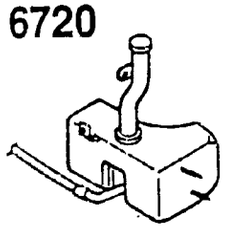

WINDSHIELD WASHER

**21** 6730 — 6740

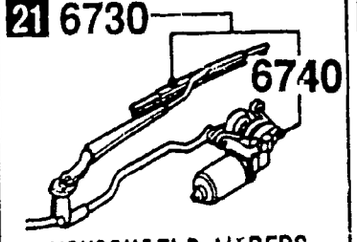

WINDSHIELD WIPERS

**22** 6750 — 6760

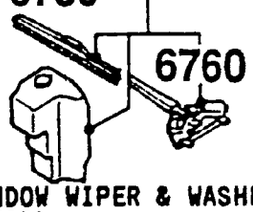

WINDOW WIPER & WASHER (REAR)

**23** 6800

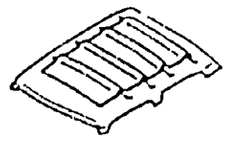

CEILING TRIMS

**7** 5120

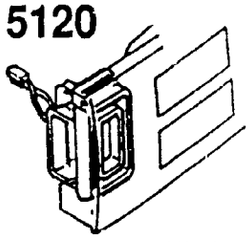

LICENSE LAMPS

**18** 6703



WIRING HARNESSES (DOOR, FLOOR/CEILING)

**17** 6702

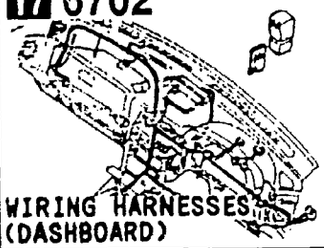

WIRING HARNESSES (DASHBOARD)

**16** 6701

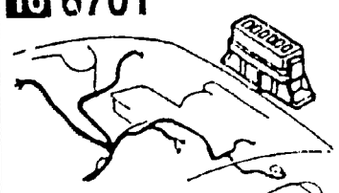

WIRING HARNESSES (ENGINE & T/MISSION)

# BODY (1/4)

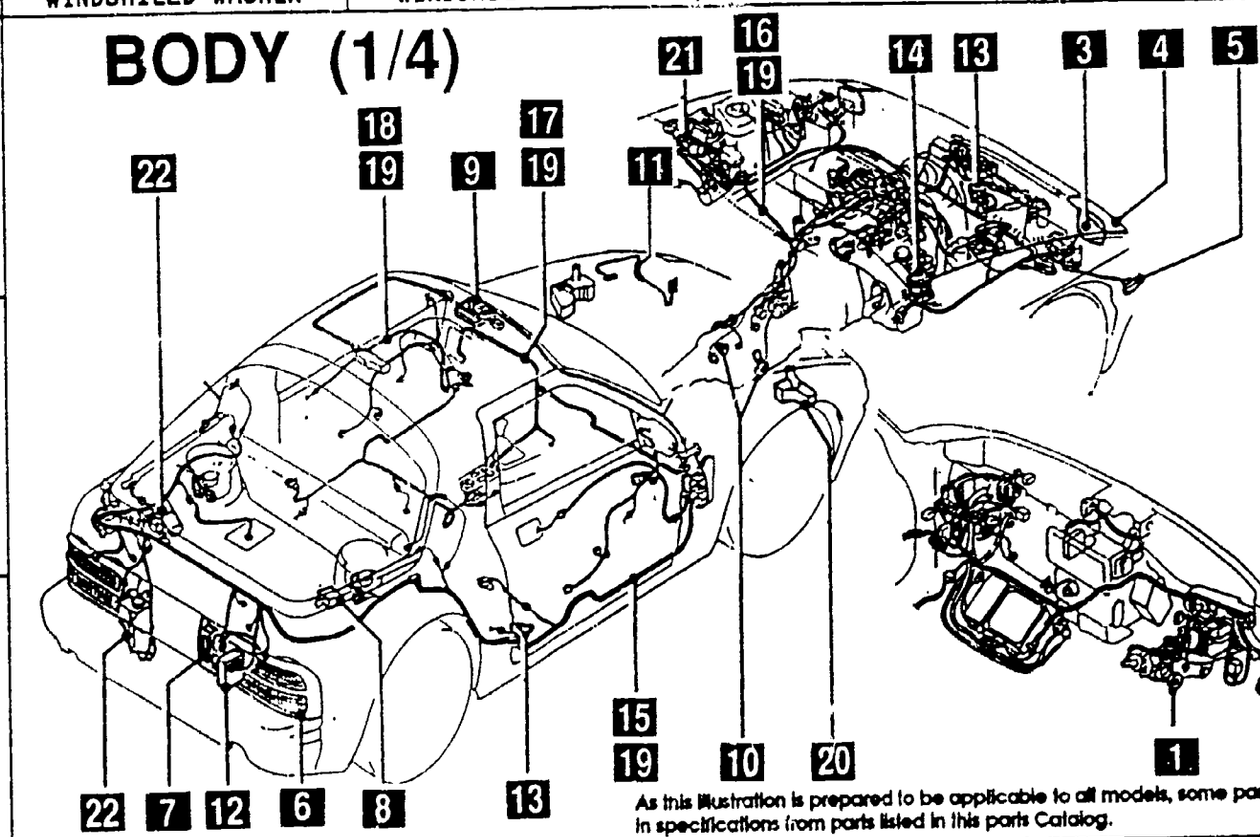


As this illustration is prepared to be applicable to all models, some parts are different in specifications from parts listed in this parts Catalog.

**8** 5125

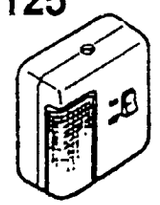

INTERIOR LAMPS

**9** 5130

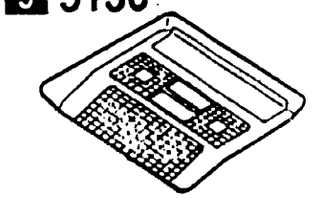

OVERHEAD CONSOLE

**10** 6600

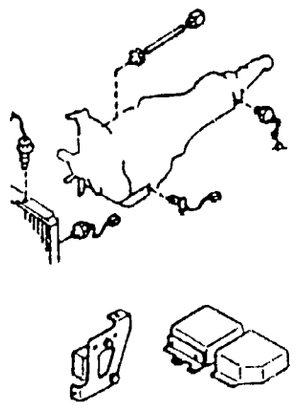

SWITCHES & RELAYS (ENGINE)

**15** 6700



WIRING HARNESSES (FRONT & REAR )

**14** 6640

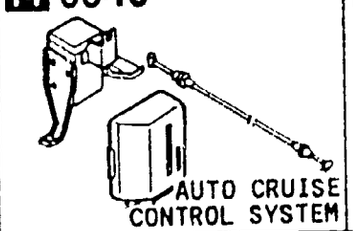

AUTO CRUISE CONTROL SYSTEM

**13** 6635

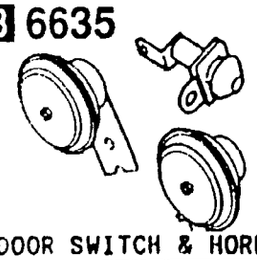

DOOR SWITCH & HORNS

**12** 6630

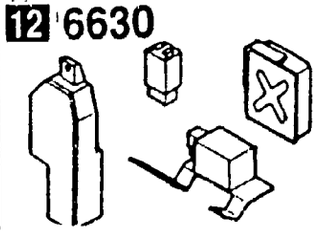

RELAYS & UNIT (BODY)

**11** 5795

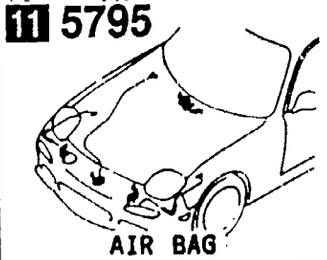

AIR BAG

# PICTORIAL INDEX

# BODY (2/4)

**1** 5000
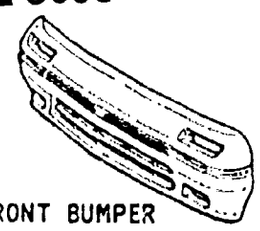
FRONT BUMPER

**2** 5010
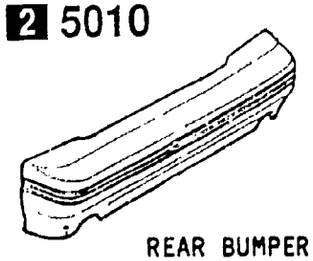
REAR BUMPER

**3** 5030
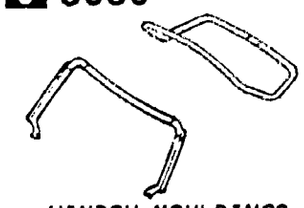
WINDOW MOULDINGS

**4** 5040
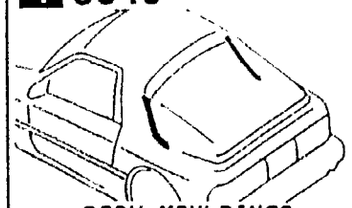
BODY MOULDINGS

**5** 5060
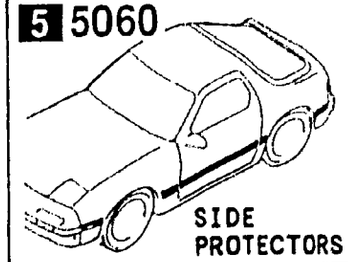
SIDE PROTECTORS

**6** 5170
RX-7
mazda
ORNAMENTS

**20** 6230
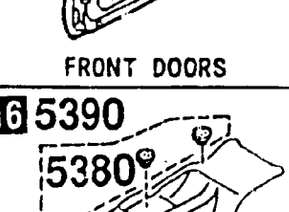
LIFT GATE MECHANISMS

**21** 6300

WINDOW GLASSES

**22** 6330
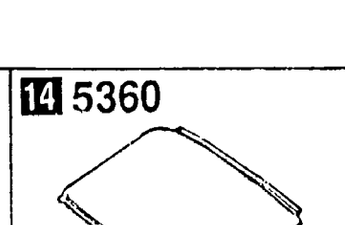
SUNROOF

**23** 7800

SPOILERS & RELATED PARTS

**7** 5180
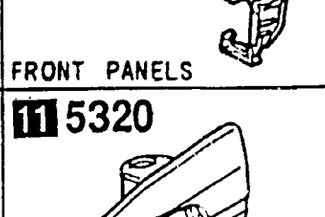
COWL & EXTRACTOR GRILLES

**19** 5840
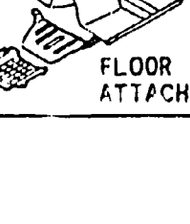
FRONT DOOR TRIMS & RELATED PARTS

**8** 5230
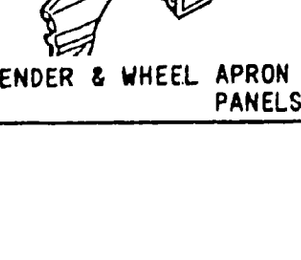
BONNET







**18** 5830

FRONT DOOR MECHANISMS

**9** 5260

TRUNK LID

**17** 5800

FRONT DOORS

**10** 5310

FRONT PANELS

**16** 5390


FLOOR ATTACHMENTS

**15** 5370

FLOOR PANELS

**14** 5360

ROOF PANELS

**13** 5340

SIDE PANELS

**12** 5330

DASH & COWL PANELS

**11** 5320

FENDER & WHEEL APRON PANELS

# PICTORIAL INDEX

**1** 5500

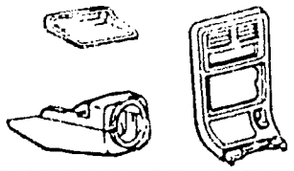

DASHBOARD EQUIPMENTS

**2** 5520

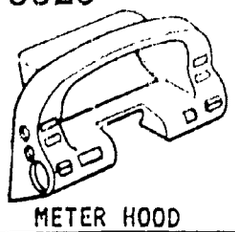

METER HOOD

**3** 5530

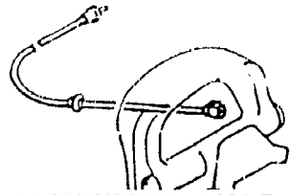

SPEEDOMETER CABLE

**4** 5540

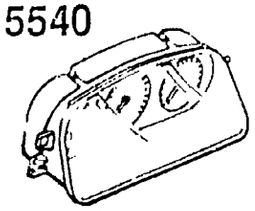

METER SET & METER COMPONENTS

**5** 5560

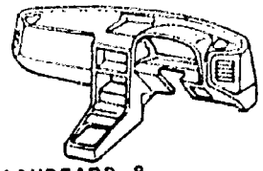

DASHBOARD & RELATED PARTS

**6** 5570

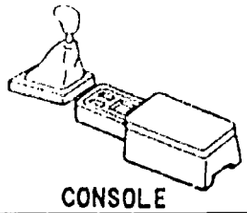

CONSOLE

## BODY (3/4)

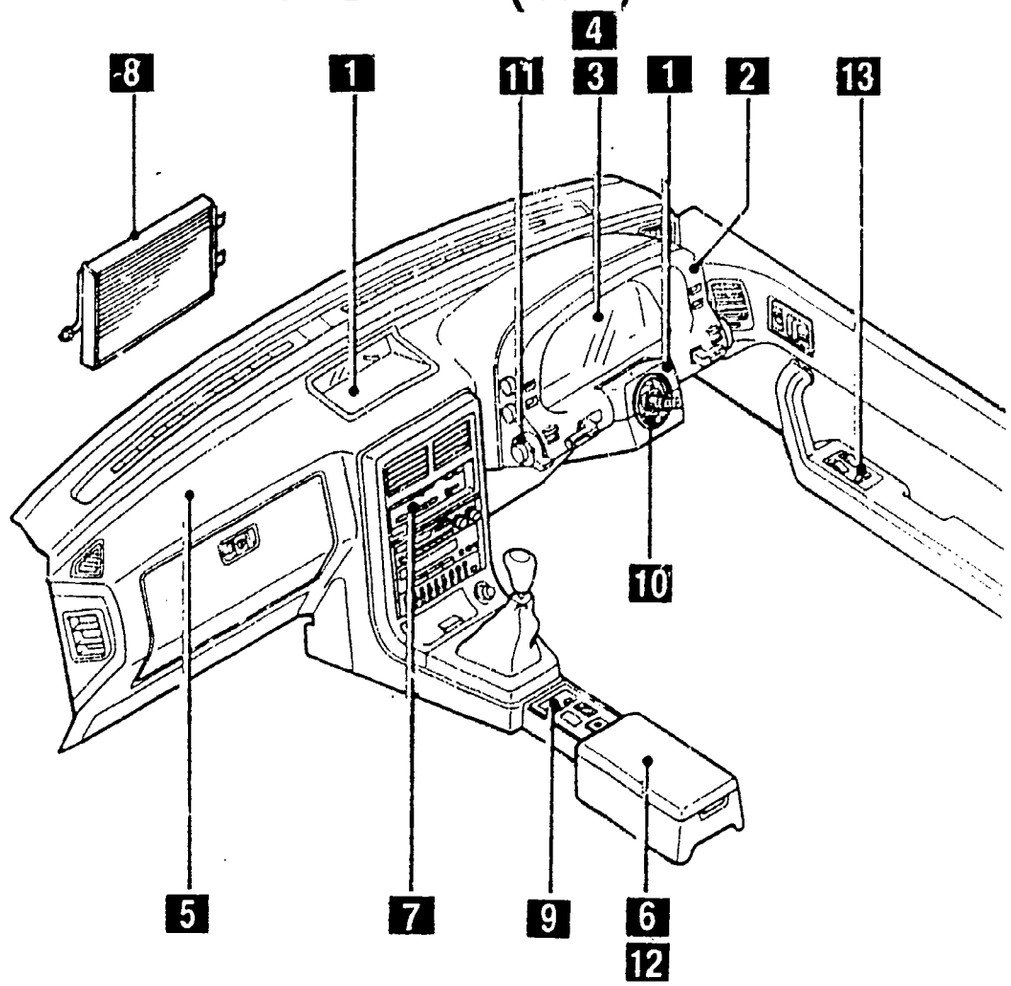


As this illustration is prepared to be applicable to all models, some parts are different in specifications from the parts listed in this parts catalog.

**7**

6120



6100



6110

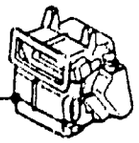

6115



HEATER

**8**

6130

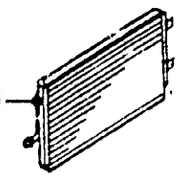

6130



6140



6135

6150

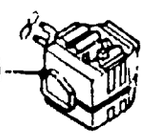

AIR CONDITIONER

**13** 6615

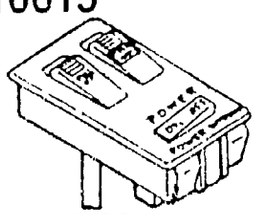

POWER WINDOW SWITCHES

**12** 7900

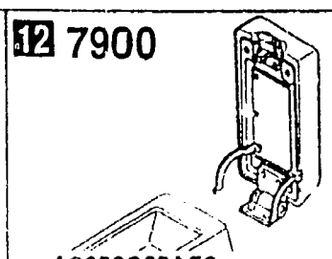

ACCESSORIES

**11** 6612

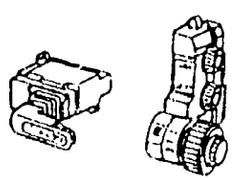

CLUSTER SWITCH

**10** 6611

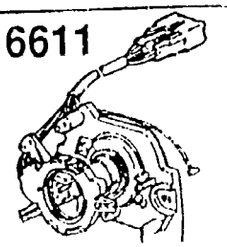

COMBINATION SWITCH

**9** 6610

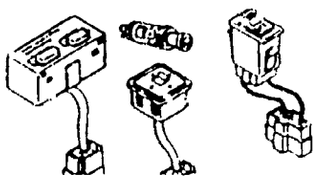

DASHBOARD SWITCHES

# PICTORIAL INDEX

**1** 5580

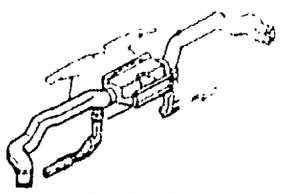

VENTILATOR

**2** 5700



SEATS

**3** 5790

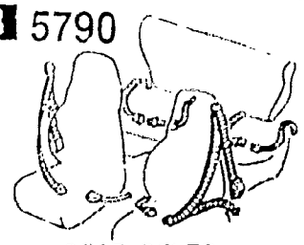

SEAT BELTS

**4** 6680

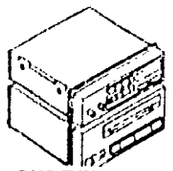

AUDIO SYSTEMS (RADIO & TAPE DECK)

**5** 6682

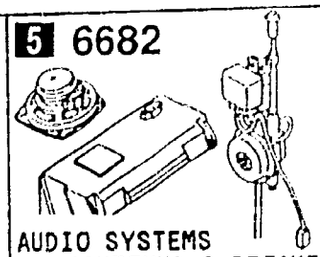

AUDIO SYSTEMS (ANTENNA & SPEAKER)

**6** 6820

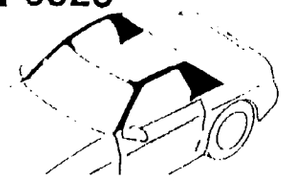

FRONT HEADER TRIM & PILLAR TRIMS

## BODY (4/4)

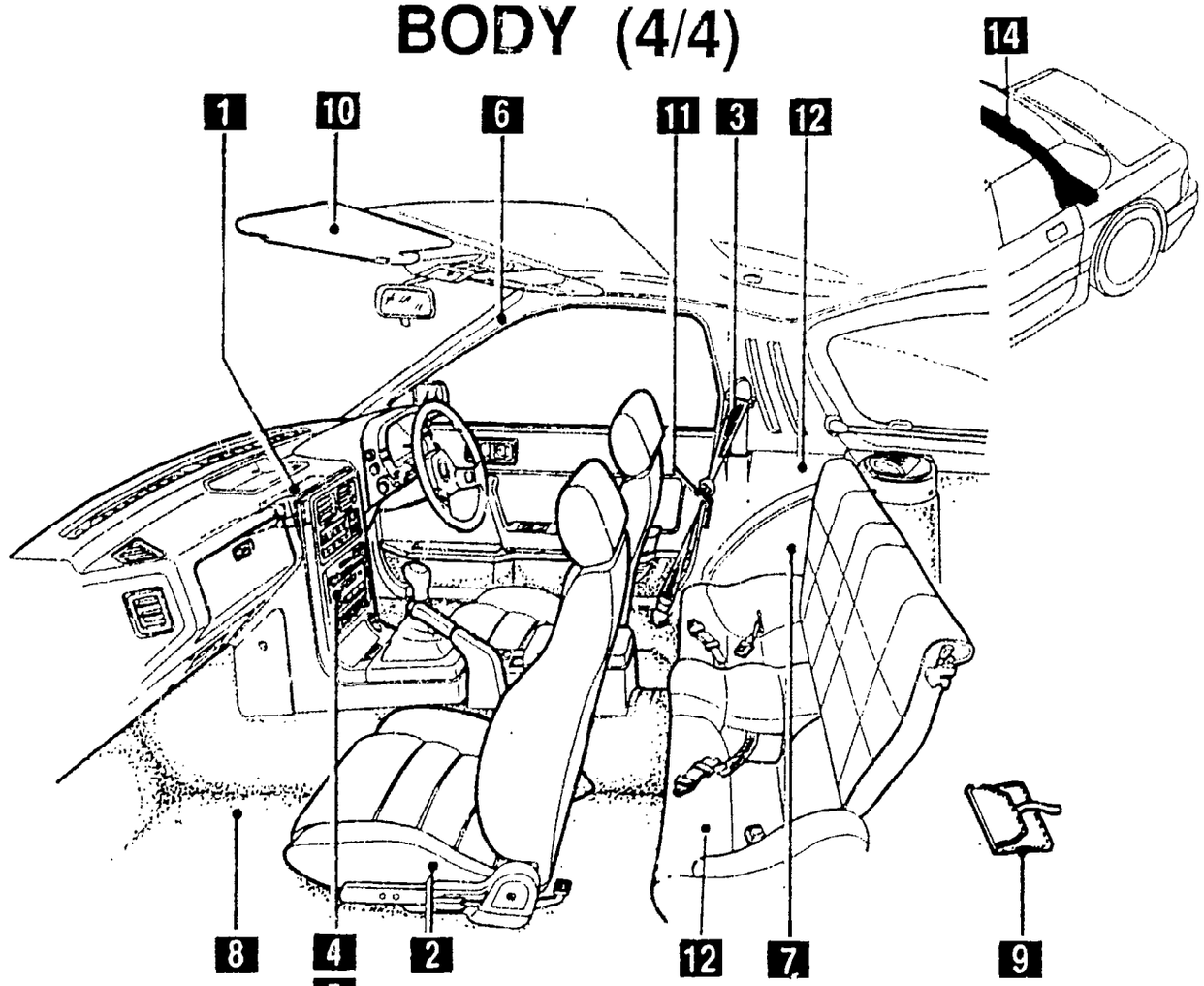


As this illustration is prepared to be applicable to all models, some parts are different in specifications from the parts listed in this parts catalog.

**7** 6840

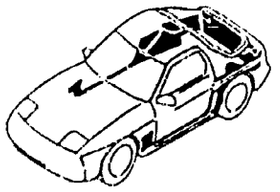

TRIMS & SCUFF PLATES

**8** 6860

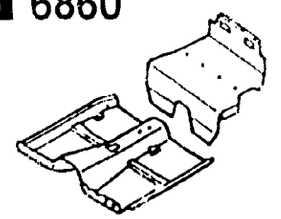

FLOOR MATS & PADS

**9** 6870

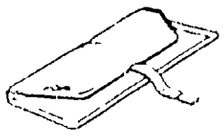

SERVICE TOOLS

**10** 6900

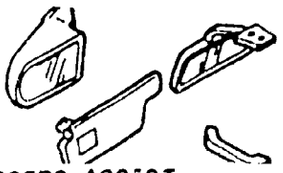

VISORS, ASSIST HANDLES & MIRRORS

**11** 6930

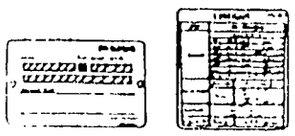

CAUTION PLATES & LABELS

**12** 7250



QUARTER WINDOW & TRIMS

**13** 6684

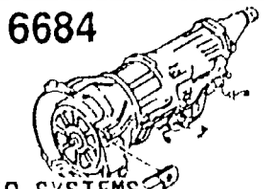

AUDIO SYSTEMS (NOISE SUPPRESSOR & EARTH CORD)

**14** 6810



ROLLEBAR

**15** 6845

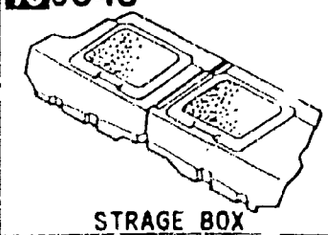

STRAGE BOX

SECTION NAME INDEX (ENGINE)

| LO.NO | SEC.NO | SECTION NAME | LO.NO | SEC.NO | SECTION NAME | LO.NO | SEC.NO | SECTION NAME |
|---|---|---|---|---|---|---|---|---|
| 1-C03 | 1000 | ENGINE & GASKET SETS (W/O TURBO) | 1-C09 | 1600 | CLUTCH DISC & COVER (MANUAL) (W/O TURBO) | | | |
| 1-D03 | 1000 A | ENGINE & GASKET SETS (TURBO) | 1-D09 | 1600 A | CLUTCH DISC & COVER (MANUAL) (TURBO) | | | |
| 1-E03 | 1030 | ROTOR HOUSINGS (W/O TURBO) | 1-F09 | 1700 | TRANSMISSION CASE (MANUAL) (W/O TURBO) | | | |
| 1-G03 | 1030 A | ROTOR HOUSINGS (TURBO) | 1 H09 | 1700 A | TRANSMISSION CASE (MANUAL) (TURBO) | | | |
| 1-I03 | 1040 | OIL PAN,FRONT & REAR HOUSING (W/O TURBO) | 1-K09 | 1710 | TRANSMISSION GEARS(MANUAL) (W/O TURBO) | | | |
| 1-L03 | 1040 A | OIL PAN,FRONT & REAR HOUSING (TURBO) | 1-E10 | 1710 A | TRANSMISSION GEARS(MANUAL) (TURBO) | | | |
| 1-C04 | 1100 | ECCENTRIC SHAFT & FLYWHEEL | 1-K10 | 1720 | CHANGE CONTROL SYSTEM (MANUAL) (W/O TURBO) | | | |
| 1-F04 | 1110 | ROTORS & RELATED PARTS | 1-N10 | 1720 A | CHANGE CONTROL SYSTEM (MANUAL) (TURBO) | | | |
| 1-H04 | 1300 | INLET MANIFOLD (W/O TURBO) | 1-E11 | 1800 | ENGINE ELECTRICAL SYSTEM | | | |
| 1-J04 | 1300 A | INLET MANIFOLD (TURBO) | 1-I11 | 1830 | ALTERNATOR | | | |
| 1-K04 | 1310 | EXHAUST MANIFOLD | 1-K11 | 1840 | STARTER | | | |
| 1-L04 | 1311 | INTER COOLER (TURBO) | 1-N11 | 1850 | BATTERY | | | |
| 1-M04 | 1312 | TURBO CHARGER | 1-C12 | 1910 | TORQUE CONVERTER,OIL PUMP & PIPINGS (AUTOMATIC) | | | |
| 1-C05 | 1320 | FUEL SYSTEM | 1-F12 | 1920 | TRANSMISSION CASE & MAIN CONTROL SYSTEM (AUTOMATIC) | | | |
| 1-E05 | 1325 | FUEL DISTRIBUTOR | 1-M12 | 1925 | CONTROL VALVE (AUTOMATIC) | | | |
| 1-F05 | 1330 | AIR CLEANER (W/O TURBO) | 1-H13 | 1930 | CLUTCHES & PLANETARY GEARS (AUTOMATIC) | | | |
| 1-H05 | 1330 A | AIR CLEANER (TURBO) | 1-D14 | 1940 | GOVERNOR, LOW & REVERSE PISTON (AUTOMATIC) | | | |
| 1-J05 | 1364 | THROTTLE BODY (W/O TURBO) | 1-G14 | 1950 | MANUAL LINKAGE SYSTEM (AUTOMATIC) | | | |
| 1-M05 | 1364 A | THROTTLE BODY (TURBO) | 1-I14 | 1960 | GASKET & SEAL KIT (AUTOMATIC) | | | |
| 1-C06 | 1371 | AIR PUMP & AIR CONTROL VALVE | | | | | | |
| 1-F06 | 1380 | EMISSION CONTROL SYSTEM (W/O TURBO) | | | | | | |
| 1-J06 | 1380 A | EMISSION CONTROL SYSTEM (TURBO) | | | | | | |
| 1-C07 | 1400 | OIL PUMP & FILTER (W/O TURBO) | | | | | | |
| 1-F07 | 1400 A | OIL PUMP & FILTER (TURBO) | | | | | | |
| 1-J07 | 1500 | COOLING SYSTEM | | | | | | |
| 1-C08 | 1580 | BRACKET,PULLEY & BELT | | | | | | |

SECTION NAME INDEX (CHASSIS)


| LO.NO | SEC.NO | SECTION NAME |
|---|---|---|
| 2-C03 | 2505 | REAR PROPELLER SHAFT |
| 2-D03 | 2550 | REAR DRIVE SHAFT |
| 2-E03 | 2600 | REAR AXLE |
| 2-G03 | 2610 | REAR BRAKE MECHANISMS |
| 2-J03 | 2710 | REAR DIFFERENTIALS (NORMAL DIFF.) |
| 2-N03 | 2710 A | REAR DIFFERENTIALS (LIMITED SLIP DIFF.) |
| 2-F04 | 2800 | REAR SUSPENSION MECHANISMS |
| 2-G04 | 2801 | REAR SPRING & DAMPER |
| 2-H04 | 2810 | REAR STABILIZER |
| 2-I04 | 2830 | REAR LOWER ARMS & SUB FRAME |
| 2-K04 | 3200 | STEERING WHEEL (W/O AIR BAG) |
| 2-M04 | 3200 A | STEERING WHEEL (W/ AIR BAG) |
| 2-N04 | 3210 | STEERING COLUMN & SHAFTS |
| 2-D05 | 3220 | STEERING GEAR (W/ POWER STEERING:ENGINE REVOLUTION PER MINUTE SENSOR) |
| 2-G05 | 3220 A | STEERING GEAR (W/ POWER STEERING:VELOCITY SENSOR) |
| 2-J05 | 3240 | POWER STEERING SYSTEM |
| 2-M05 | 3300 | FRONT AXLE |
| 2-C06 | 3310 | FRONT BRAKE MECHANISMS |
| 2-G06 | 3400 | FRONT SUSPENSION MECHANISMS |
| 2-I06 | 3401 | FRONT SPRING & DAMPER |
| 2-J06 | 3410 | CROSSMEMBER & STABILIZER |
| 2-K06 | 3700 | TIRES & JACK |
| 2-C07 | 3900 | ENGINE & T/MISSION MOUNTINGS (MT) |
| 2-D07 | 3900A | ENGINE & T/MISSION MOUNTINGS (AT) |
| 2-E07 | 4000 | EXHAUST SYSTEM (W/O TURBO) |
| 2-I07 | 4000 A | EXHAUST SYSTEM (TURBO) |
| 2-L07 | 4140 | CLUTCH RELEASE & MASTER CYLINDERS (MANUAL TRANSMISSION) |
| 2-N07 | 4145 | CLUTCH PIPINGS (MANUAL TRANSMISSION) |
| 2-C08 | 4160 | ACCELERATOR CONTROL SYSTEM |
| 2-D08 | 4200 | FUEL TANK |
| 2-G08 | 4210 | FUEL LID OPENER |
| 2-H08 | 4300 | CLUTCH & BRAKE PEDALS (MANUAL TRANSMISSION) |
| 2-K08 | 4300A | BRAKE PEDALS (AUTOMATIC TRANSMISSION) |
| 2-M08 | 4340 | BRAKE MASTER CYLINDER & POWER BRAKE (W/O TURBO) |
| 2-C09 | 4340 A | BRAKE MASTER CYLINDER & POWER BRAKE (TURBO) |
| 2-E09 | 4360 | BRAKE PIPINGS (W/O TURBO) |
| 2-G09 | 4360 A | BRAKE PIPINGS (TURBO) |
| 2-I09 | 4370 | ANTILOCK BRAKE SYSTEM |
| 2-M09 | 4400 | PARKING BRAKE SYSTEM |
| 2-C10 | 4500 | FUEL PIPINGS |
| 2-G10 | 4600 | CHANGE CONTROL SYSTEM (AT) |

SECTION NAME INDEX (BODY)1/2

| LO.NO | SEC.NO | SECTION NAME |
|---|---|---|
| 3-C03 | 0900 | KEY SETS |
| 3-F03 | 5000 | FRONT BUMPER |
| 3-H03 | 5010 | REAR BUMPER |
| 3-J03 | 5020 | HEAD LAMP CLEANER |
| 3-L03 | 5030 | WINDOW MOULDINGS |
| 3-M03 | 5040 | BODY MOULDINGS (COUPE) |
| 3-D04 | 5060 | SIDE PROTECTORS |
| 3-G04 | 5100 | HEAD LAMPS |
| 3-H04 | 5103 | HEAD LAMP RETRACTORS |
| 3-K04 | 5105 | FRONT COMBINATION LAMPS |
| 3-D05 | 5110 | REAR COMBINATION LAMPS |
| 3-H05 | 5120 | LICENSE LAMPS |
| 3-J05 | 5125 | INTERIOR LAMPS |
| 3-K05 | 5130 | OVERHEAD CONSOLE |
| 3-L05 | 5170 | ORNAMENTS |
| 3-M05 | 5180 | COWL & EXTRACTOR GRILLES |
| 3-D06 | 5230 | BONNET |
| 3-G06 | 5260 | TRUNK LID (CONVERTIBLE) |
| 3-H06 | 5310 | FRONT PANELS (COUPE) |
| 3-J06 | 5310 A | FRONT PANELS (CONVERTIBLE) |
| 3-M06 | 5320 | FENDER & WHEEL APRON PANELS (COUPE) |
| 3-D07 | 5320 A | FENDER & WHEEL APRON PANELS (CONVERTIBLE) |
| 3-G07 | 5330 | DASH & COWL PANELS |
| 3-H07 | 5340 | SIDE PANELS (COUPE) |
| 3-M07 | 5340A | SIDE PANELS (CONVERTIBLE) |
| 3-G08 | 5360 | ROOF PANELS (COUPE) |
| 3-H08 | 5370 | FLOOR PANELS (COUPE) |
| 3-K08 | 5370 A | FLOOR PANELS (CONVERTIBLE) |
| 3-C09 | 5380 | FLOOR ATTACHMENTS (HOLE COVERS) |
| 3-E09 | 5390 | FLOOR ATTACHMENTS |
| 3-C10 | 5500 | DASHBOARD EQUIPMENTS |
| 3-F10 | 5520 | METER HOOD |
| 3-G10 | 5530 | SPEEDOMETER CABLE |
| 3-H10 | 5540 | METER COMPONENTS |
| 3-J10 | 5560 | DASHBOARD & RELATED PARTS |
| 3-D11 | 5570 | CONSOLE |
| 3-G11 | 5580 | VENTILATOR |
| 3-H11 | 5700 | FRONT SEATS (COUPE) |
| 3-J12 | 5700A | FRONT SEATS (CONVERTIBLE) |
| 3-D13 | 5790 | SEAT BELTS (COUPE) |
| 3-F13 | 5790A | SEAT BELTS (CONVERTIBLE) |
| 3-G13 | 5795 | AIR BAG |
| 3-H13 | 5800 | FRONT DOORS (COUPE) |
| 3-K13 | 5800A | FRONT DOORS (CONVERTIBLE) |
| 3-C14 | 5830 | FRONT DOOR MECHANISMS (COUPE) |
| 3-J14 | 5830A | FRONT DOOR MECHANISMS (CONVERTIBLE) |
| 3-M14 | 5840 | FRONT DOOR TRIMS & RELATED PARTS (COUPE) |
| 3-H15 | 5840A | FRONT DOOR TRIMS & RELATED PARTS (CONVERTIBLE) |
| 3-C16 | 6100 | HEATER |
| 3-E16 | 6110 | HEATER UNIT COMPONENTS |
| 3-F16 | 6115 | HEATER CONTROLS COMPONENTS |
| 3-G16 | 6120 | HEATER BLOWER COMPONENTS |
| 3-J16 | 6130 | AIR CONDITIONER (JAPAN MAKE) |
| 3-L16 | 6130A | AIR CONDITIONER (OPTIONAL PARTS) |



3-D 2

SECTION NAME INDEX (BODY)2/2

| LO.NO | SEC.NO | SECTION NAME |
|---|---|---|
| 4-C03 | 6135 | O RING SET,PIPING |
| 4-D03 | 6140 | COMPRESSOR COMPONENTS (AIR CONDITIONER) (JAPAN MAKE) |
| 4-G03 | 6140A | COMPRESSOR COMPONENTS (AIR CONDITIONER) (OPTIONAL PARTS) |
| 4-I03 | 6150 | COOLING UNIT (AIR CONDITIONER) (JAPAN MAKE) |
| 4-J03 | 6150A | COOLING UNIT (AIR CONDITIONER) (OPTIONAL PARTS) |
| 4-K03 | 6230 | LIFT GATE MECHANISMS (COUPE) |
| 4-N03 | 6300 | WINDOW GLASSES (COUPE) |
| 4-C04 | 6300A | WINDOW GLASSES (CONVERTIBLE) |
| 4-D04 | 6330 | SUNROOF (COUPE) |
| 4-H04 | 6330A | SUNROOF (CONVERTIBLE) |
| 4-M04 | 6600 | SWITCHES & RELAYS (ENGINE) |
| 4-G05 | 6610 | DASHBOARD SWITCHES |
| 4-H05 | 6611 | COMBINATION SWITCH |
| 4-I05 | 6612 | CLUSTER SWITCH |
| 4-L05 | 6615 | POWER WINDOW SWITCHES |
| 4-M05 | 6630 | RELAYS & UNIT (BODY) |
| 4-C06 | 6635 | DOOR SWITCH & HORNS |
| 4-D06 | 6640 | AUTO CRUISE CONTROL SYSTEM |
| 4-E06 | 6680 | AUDIO SYSTEMS (RADIO & TAPE DECK) |
| 4-J06 | 6682 | AUDIO SYSTEMS (ANTENNA & SPEAKER) |
| 4-C07 | 6684 | AUDIO SYSTEMS(NOISE SUPPRESSOR & EARTH CORD) |
| 4-D07 | 6700 | WIRING HARNESSES(FRONT & REAR) (COUPE) |
| 4-F07 | 6700 A | WIRING HARNESSES(FRONT & REAR) (CONVERTIBLE) |
| 4-H07 | 6701 | WIRING HARNESSES(ENGINE & T/MISSION) (COUPE) |
| 4-J07 | 6701 A | WIRING HARNESSES(ENGINE & T/MISSION) (CONVERTIBLE) |
| 4-K07 | 6702 | WIRING HARNESSES(DASHBOARD) |
| 4-L07 | 6703 | WIRING HARNESSES(DOOR,FLOOR/CEILING) |
| 4-M07 | 6704 | WIRING HARNESS CLAMPS |
| 4-D08 | 6720 | WINDSHIELD WASHER |
| 4-F08 | 6730 | WINDSHIELD WIPERS |
| 4-G08 | 6740 | WIPER MOTOR COMPONENTS(FRONT) |
| 4-H08 | 6750 | WINDOW WIPER & WASHER (REAR) |
| 4-K08 | 6760 | WINDOW WIPER MOTOR COMPONENTS (REAR) |
| 4-L08 | 6800 | CEILING TRIMS (COUPE) |
| 4-N08 | 6800A | CEILING TRIMS (CONVERTIBLE) |
| 4-C09 | 6810 | ROLLBAR (CONVERTIBLE) |
| 4-E09 | 6820 | PILLAR TRIMS (COUPE) |
| 4-G09 | 6820A | PILLAR TRIMS (CONVERTIBLE) |
| 4-H09 | 6840 | TRIMS & SCUFF PLATES (COUPE) |
| 4-L09 | 6840A | TRIMS & SCUFF PLATES (CONVERTIBLE) |
| 4-N09 | 6845 | STRAGE BOX |
| 4-D10 | 6860 | FLOOR MATS & PADS (COUPE) |
| 4-I10 | 6860A | FLOOR MATS & PADS (CONVERTIBLE) |
| 4-M10 | 6870 | SERVICE TOOLS |
| 4-N10 | 6900 | VISORS,ASSIST HANDLES & MIRRORS (COUPE) |
| 4-E11 | 6900A | VISORS,ASSIST HANDLES & MIRRORS (CONVERTIBLE) |
| 4-G11 | 6930 | CAUTTON PLATES & LABELS |
| 4-I11 | 7250 | QUARTER WINDOW & TRIMS |
| 4-K11 | 7800 | SPOILERS & RELATED PARTS |

## 0900 KEY SETS

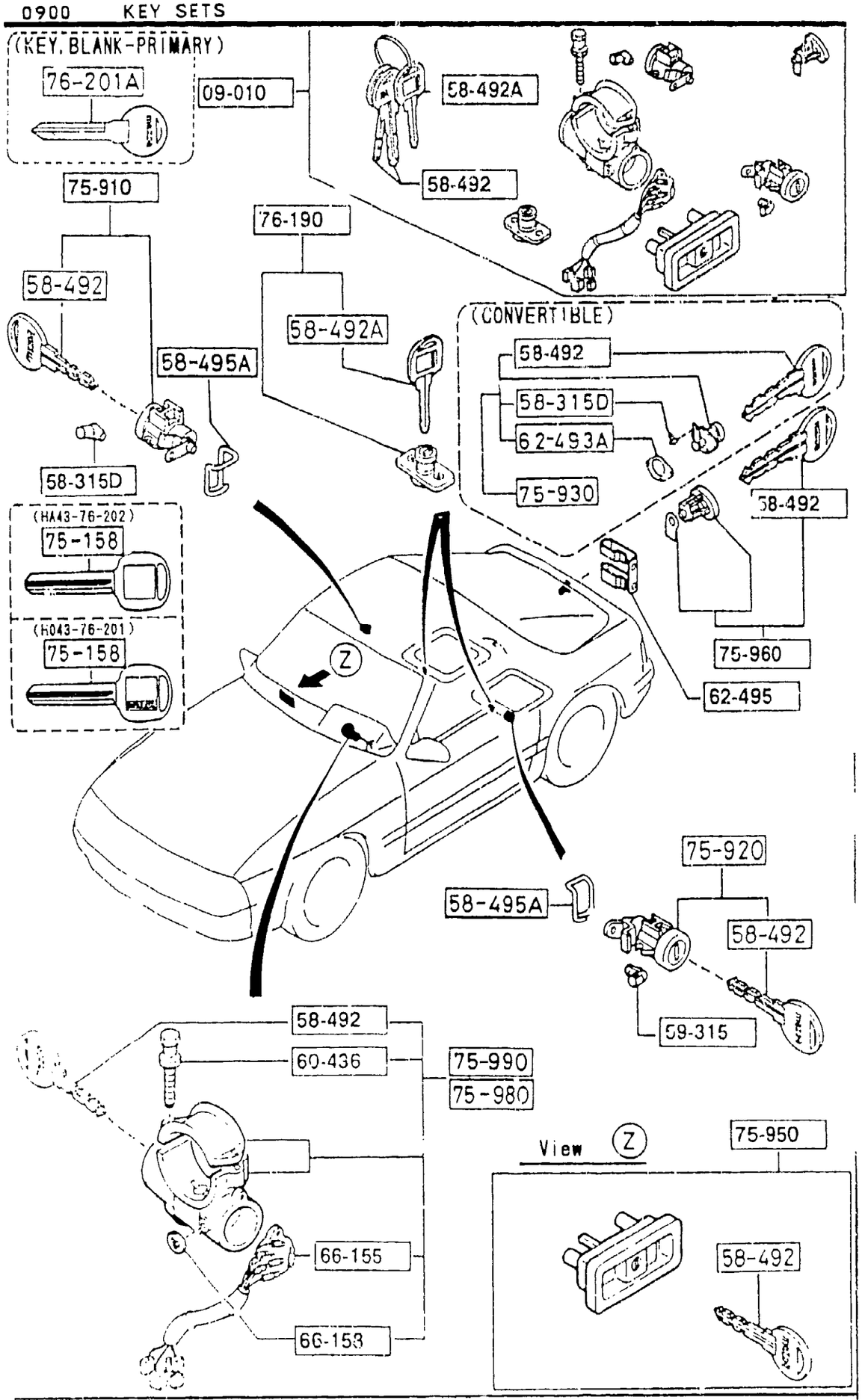


AUFA03

| PART NO. | QTY | MODEL/RESTRICTION | MODEL/RESTRICTION | MODEL/RESTRICTION | FROM-TO |
|---|---|---|---|---|---|
| 09-010 | | KEY SET | | | |
| FC02-09-010 | 1 | ((CPE))(MT) ) | | | |
| 02 | INT- | FD8 FE1 BLACK | | | |
| 48 | INT- | FD9 BLUE | | | |
| FC07-09-010 A (FC07-09-010A) | 1 | | | | -1219 |
| 02 | INT- | FD8 FE1 BLACK | | | |
| 48 | INT- | FD9 BLUE | | | |
| FC66-09-010 A (FC66-09-010A) | 1 | | | | -1219 |
| 02 | INT- | FD8 FE1 BLACK | | | |
| 48 | INT- | FD9 BLUE | | | |
| FC67-09-010 A (FC67-09-010A) | 1 | | | | -1219 |
| 02 | INT- | FD8 FE1 BLACK | | | |
| 48 | INT- | FD9 BLUE | | | |
| FC07-09-010A | 1 | ((CPE))(AT) ) | | | 1219- |
| 02 | INT- | FD8 FE1 BLACK | | | |
| 48 | INT- | FD9 BLUE | | | |
| FC66-09-010A | 1 | ((CONVERTIBLE))(MT) ) | | | 1219- |
| 02 | INT- | FD8 FE1 BLACK | | | |
| 48 | INT- | FD9 BLUE | | | |
| FC67-09-010A | 1 | ((CONVERTIBLE))(AT) ) | | | 1219- |
| 02 | INT- | FD8 FE1 BLACK | | | |
| 48 | INT- | FD9 BLUE | | | |
| 58-315D | | CLIP (R) | | | |
| G030-58-315 | 1 | (CPE) | | | |
| G030-58-315 | 2 | (CONVERTIBLE) | | | |
| 58-492 | | KEY, PRIMARY | | | |
| H043-58-492 | 2 | KEY NO.IS REQUIRED | | | |
| 58-492A | | KEY, SECONDARY | | | |
| H043-58-493 | 1 | KEY NO.IS REQUIRED | | | |

1219 FC3***-906627

## 0900 KEY SETS

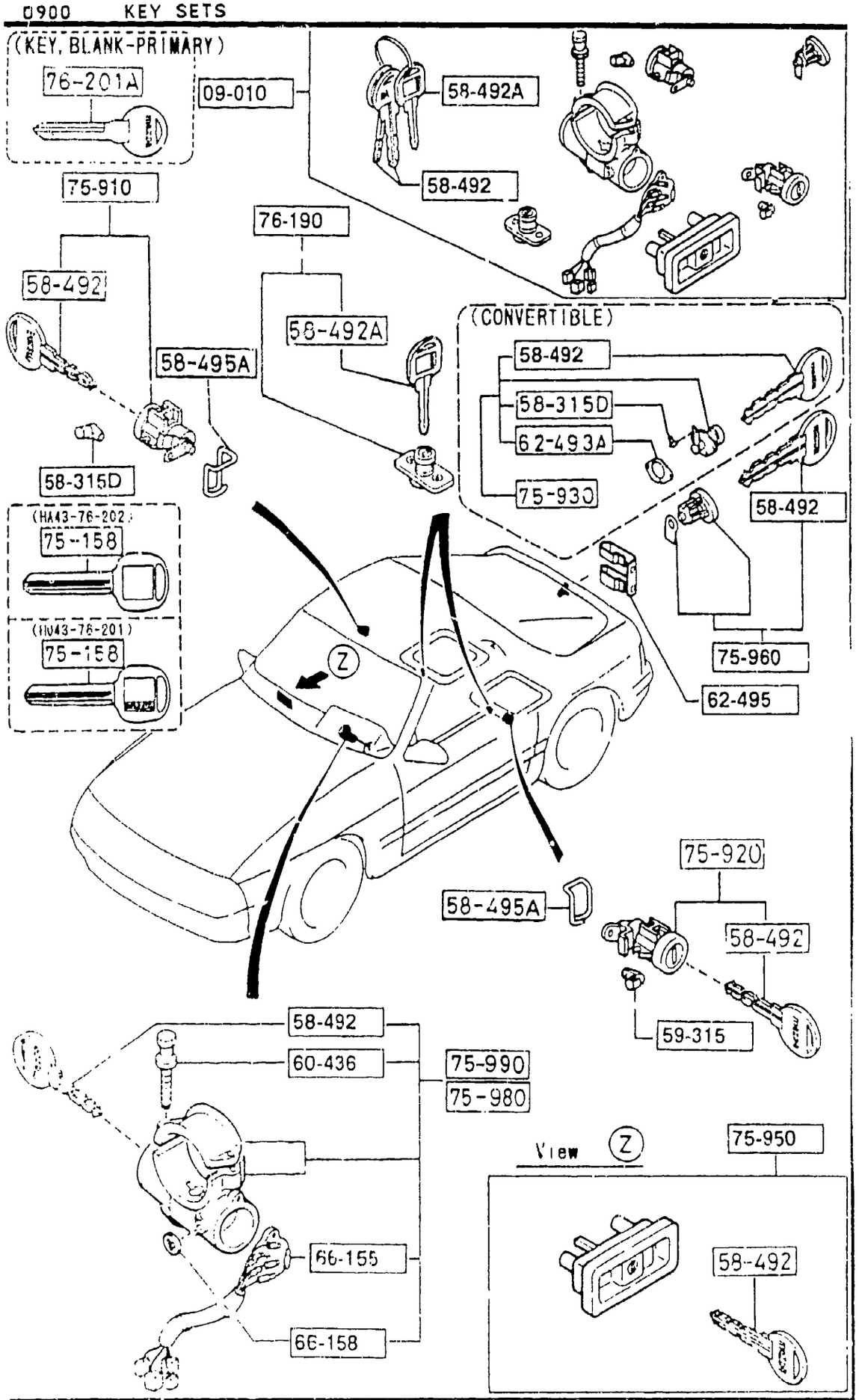


| PART NO. | QTY | MODEL/RESTRICTION | MODEL/RESTRICTION | MODEL/RESTRICTION | FROM-TO |
|---|---|---|---|---|---|
| 58-495A | | RETAINER,LOCK CYL. | | | |
| FB01-58-495 | 2 | | | | |
| 59-315 | | CLIP | | | |
| G030-59-315 | 1 | | | | |
| 60-436 | | BOLT,SET | | | |
| H043-66-154 | 2 | | | | |
| 62-493A | | GASKET,KEY CYLINDER | | | |
| FB67-56-904 | 1 | (CONVERTIBLE) | | | |
| 62-495 | | RETAINER,LOCK CYL. | | | |
| FB01-62-495 | 1 | (CPE) | | | |
| 66-155 | | SWITCH,IGNITION | | | |
| FC01-66-151 | 1 | ((CPE))(AT) ) (CONVERTIBLE) | | | |
| FC02-66-151 | 1 | ((CPE))(MT) ) | | | |
| 66-158 | | NUT,SPEED-STEERING LOCK | | | |
| BC46-66-158 | 2 | | | | |
| 75-158 | | KEY,BLANK | | | |
| H043-76-201 | 1 | | | | |
| HA43-76-202 | 1 | | | | |
| 75-910 | | KEY SUB SET(R),DOOR | | | |
| FB01-76-210B | 1 | | | | |
| 75-920 | | KEY SUB SET(L),DOOR | | | |
| FB01-76-220B | 1 | | | | |
| 75-930 | | KEY SUB SET,TRUNK | | | |
| FB68-76-230 | 1 | (CONVERTIBLE) | | | |
| 75-950 | | KEY SUB SET,GLOVE | | | |
| FB02-76-250 | 1 | | | | |
| 02 | INT- | FD8 FE1 BLACK | | | |
| 48 | INT- | FD9 BLUE | | | |

## 0900 KEY SETS

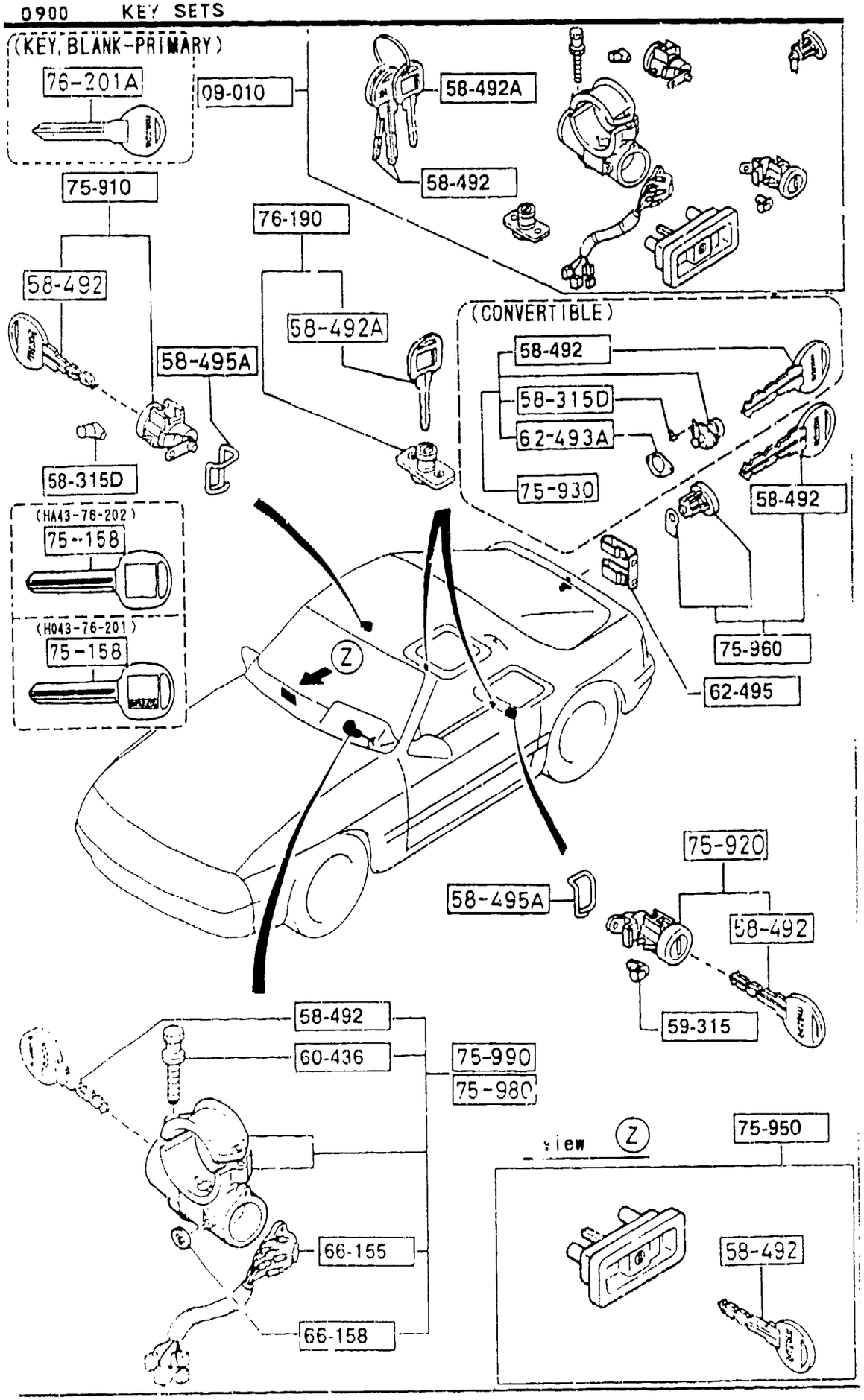


| PART NO. | QTY | MODEL/RESTRICTION | MODEL/RESTRICTION | MODEL/RESTRICTION | FROM-TO |
|---|---|---|---|---|---|
| 75-960 | | KEY SUB SET,LIFT GATE | | | |
| FB01-76-260 | 1 | (CPE) | | | |
| 75-980 | | KEY SUB SET,IG.SWICH | | | |
| FC01-76-290 | 1 | ((CPE)>(MT) ) | | | |
| FC07-76-290 A (FC07-76-290A) | 1 | | | | -1219 |
| FC07-76-290A | 1 | ((CPE)>(AT) ) | | | 1219- |
| 75-990 | | KEY SUB SET,ST.LOCK | | | |
| *FC66-76-290 A (FC66-76-290A) | 1 | | | | -1219 |
| *FC67-76-290 A (FC67-76-290A) | 1 | | | | -1219 |
| FC66-76-290A | 1 | ((CONVERTIBLE)>(MT) ) | | | 1219- |
| FC67-76-290A | 1 | ((CONVERTIBLE)>(AT) ) | | | 1219- |
| 76-190 | | KEY SUB SET,STOWAGE | | | |
| FB02-76-290 | 1 | (CPE) | | | |
| 76-201A | | KEY,BLANK-PRIMARY | | | |
| HA43-76-201A | 1 | | | | |

1219 FC3***-906627

## 5000 FRONT BUMPER

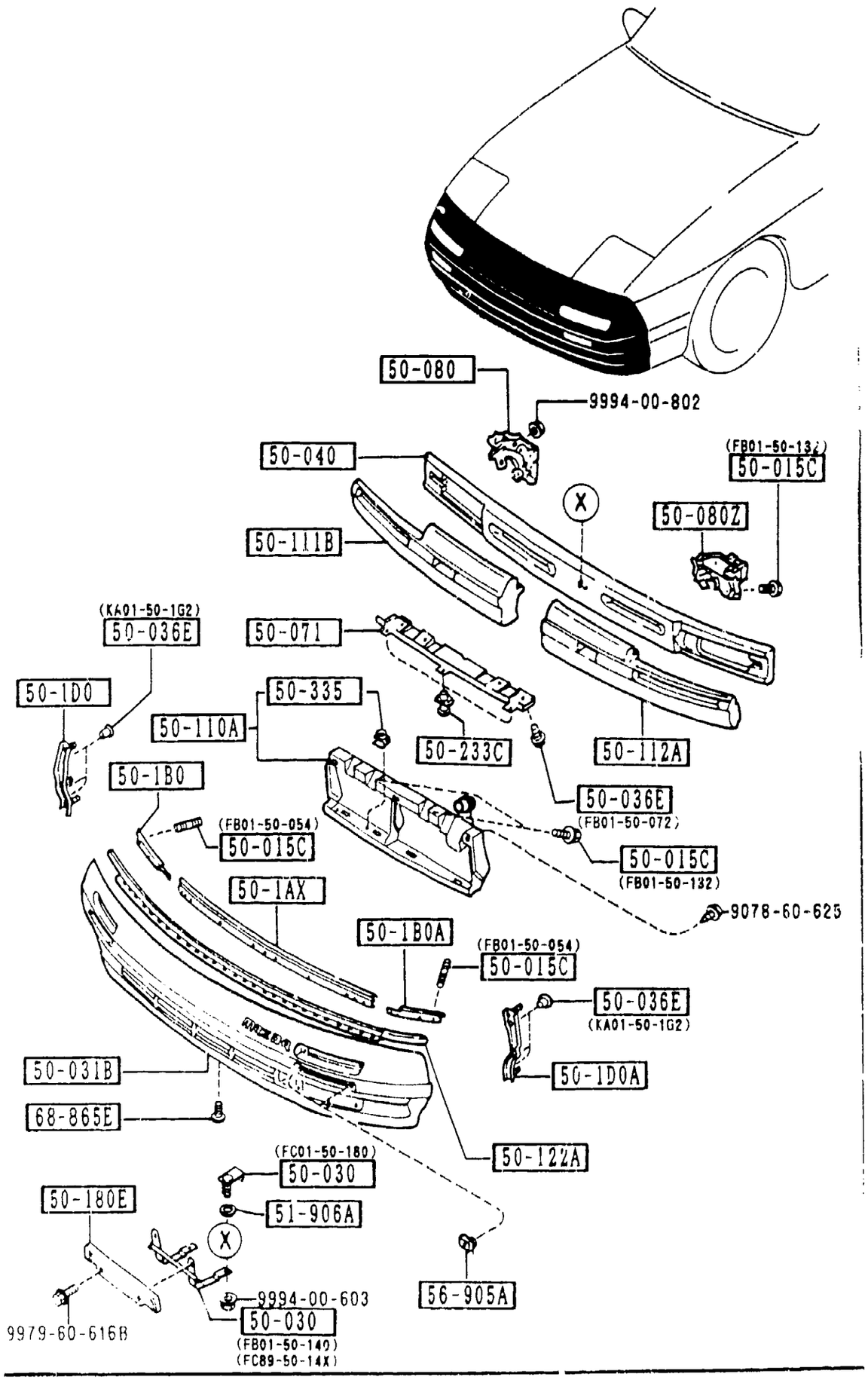


| PART NO. | QTY | MODEL/RESTRICTION | MODEL/RESTRICTION | MODEL/RESTRICTION | FROM-TO |
|---|---|---|---|---|---|
| 50-015C | | BOLT | | | |
| FB01-50-054 | 2 | | | | |
| FB01-50-132 | 4 | | | | |
| 50-030 | | HOLDER,NO. PLATE | | | |
| FC89-50-14X | 1 | ('92 MODEL) | | | |
| FB01-50-140 | 1 | ('91 MODEL) | | | |
| FC01-50-180 | 2 | | | | |
| 50-031B | | FACE,FRONT BUMPER | | | |
| FC01-50-031 | 1 | PAINT TO MATCH | | | |
| 50-036E | | CLIP | | | |
| FB01-50-072 | 3 | | | | |
| KA01-50-1G2 | 6 | | | | |
| 50-040 | | REINFORCEMENT,BUMPER | | | |
| FC01-50-071 | 1 | | | | |
| 50-071 | | PLATE,SEAL-FRONT BUMPER | | | |
| FB01-50-071 | 1 | | | | |
| 50-080 | | STAY(R),FRONT BUMPER | | | |
| FB01-50-080A | 1 | | | | |
| 50-080Z | | STAY(L),FRONT BUMPER | | | |
| FB01-50-090A | 1 | | | | |
| 50-1AX | | PLATE NO.1,SET-F. BUMPER | | | |
| FC01-50-1A0 | 1 | | | | |
| 50-1B0 | | PLATE NO.2(R),SET-F. BUMPER | | | |
| FC01-50-1B0 | 1 | | | | |
| 50-1B0A | | PLATE NO.2(L),SET-F. BUMPER | | | |
| FC01-50-1C0 | 1 | | | | |
| 50-1D0 | | PLATE NO.3(R),SET-F. BUMPER | | | |
| FC01-50-1D0 | 1 | | | | |

## 5000 FRONT BUMPER

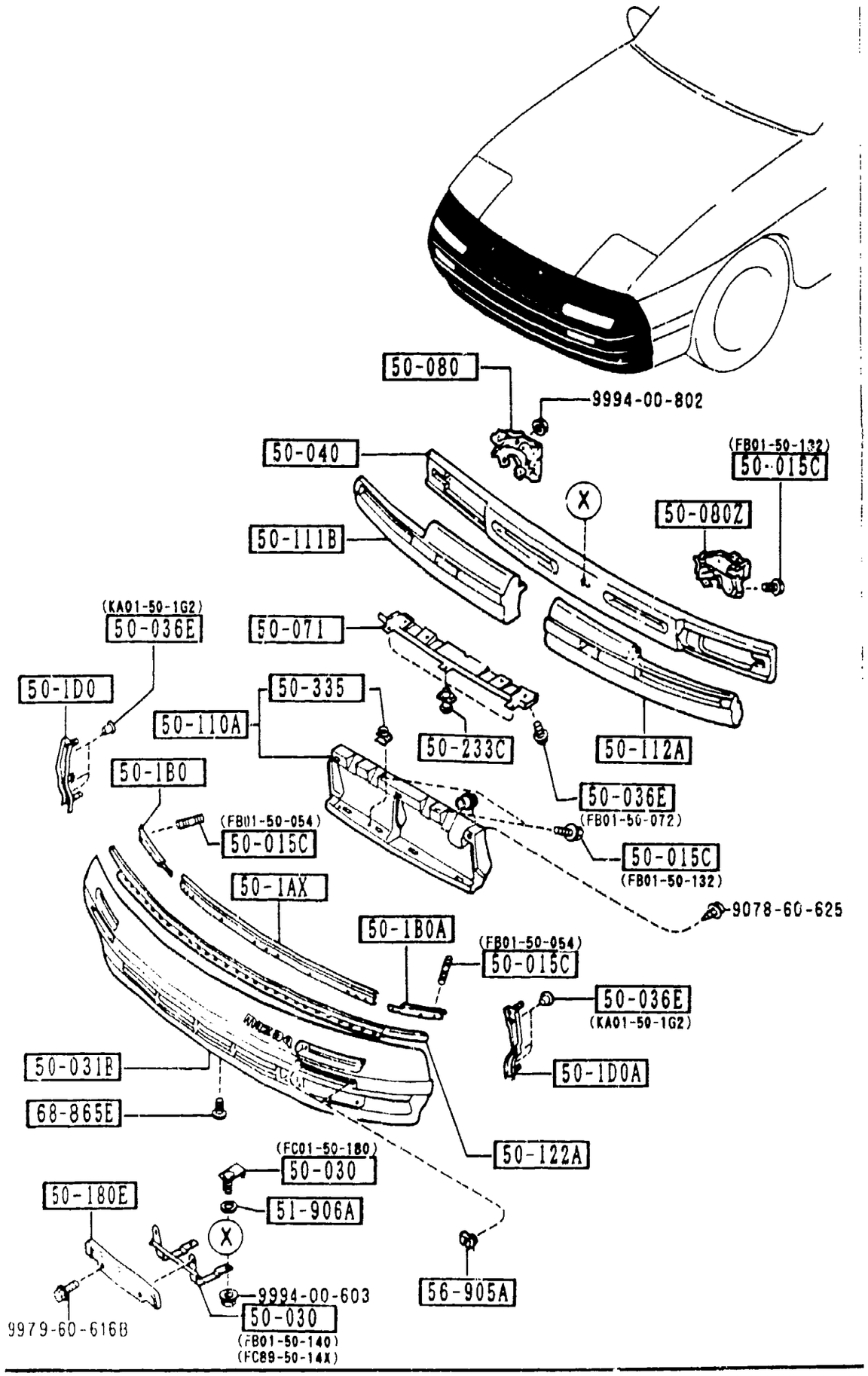


| PART NO. | QTY | MODEL/RESTRICTION | MODEL/RESTRICTION | MODEL/RESTRICTION | FROM-TO |
|---|---|---|---|---|---|
| 50-1D0A | | PLATE NO.3(L),SET-F. BUMPER | | | |
| FC01-50-1E0 | 1 | | | | |
| 50-110A | | BRACKET,BUMPER | | | |
| FC01-50-A30A | 1 | | | | |
| 50-111B | | FOAM(R),ENGY.ABS-FRT BUMP | | | |
| FC01-50-111 | 1 | | | | |
| 50-112A | | FOAM(L),ENGY.ABS-FRT BUMP | | | |
| FC01-50-112 | 1 | | | | |
| 50-122A | | RETAINER,FRT.BUMPER | | | |
| FB01-50-050A | 1 | | | | |
| 50-180E | | PROTECTOR,NO. PLATE | | | |
| FB01-50-144 | 1 | | | | |
| 50-233C | | FASTENER,REAR BUMPER | | | |
| BF82-50-233 | 3 | | | | |
| 50-335 | | NUT,CLIP | | | |
| FB01-50-133C | 4 | ('92 MODEL) | | | |
| FB01-50-133 A (FB01-50-133A) | 4 | | | | -1424 |
| FB01-50-133A | 4 | ('91 MODEL) | | | 1424- |
| 51-906A | | WASHER,ROOF MOULD | | | |
| S232-51-906 | 2 | | | | |
| 56-905A | | NUT,SPRING | | | |
| 0820-56-905 | 4 | | | | |
| 68-865E | | FASTENER | | | |
| S049-68-865 | 2 | | | | |
| 00 | INT- | FD8 FD9 BLACK | | | |

1424 FC3***-907299

5010 REAR BUMPER

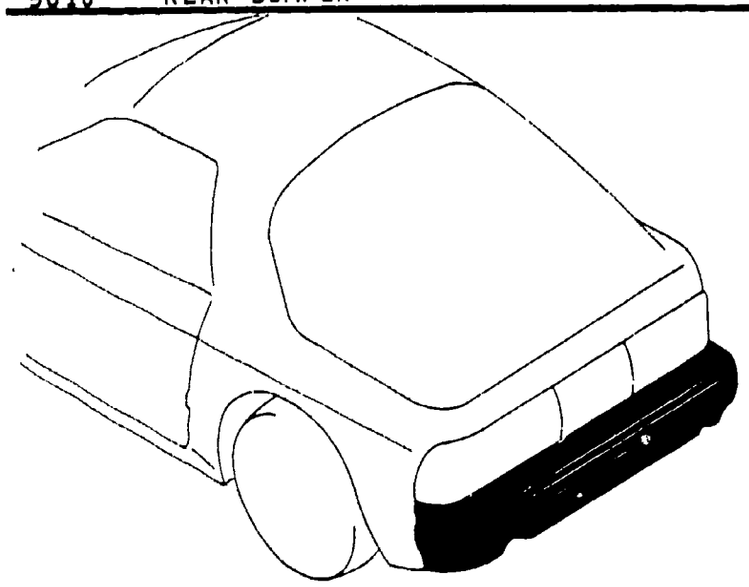

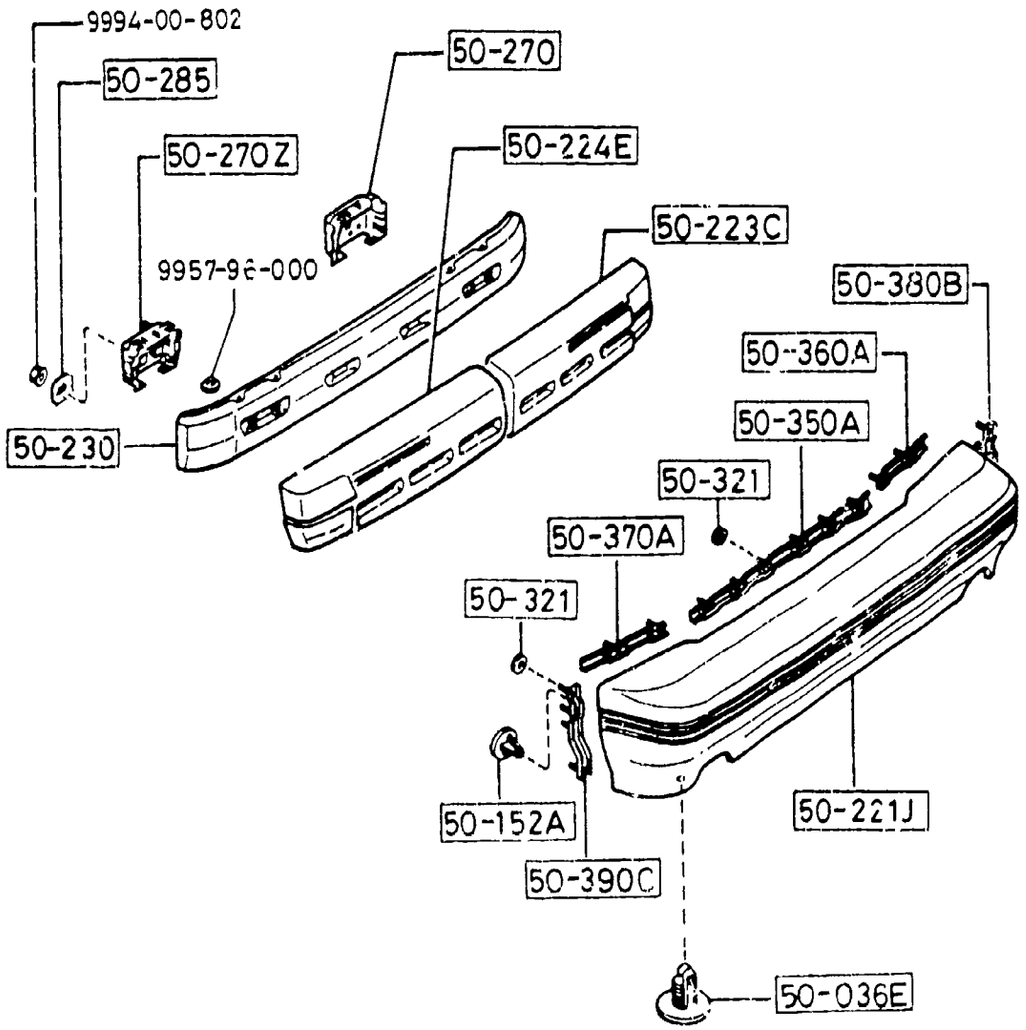


| PART NO. | QTY | MODEL/RESTRICTION | MODEL/RESTRICTION | MODEL/RESTRICTION | FROM-TO |
|---|---|---|---|---|---|
| 50-036E<br>FB01-50-072 | 6 | CLIP | | | |
| 50-152A<br>3597-50-152 | 10 | CLIP | | | |
| 50-221J<br>FC01-50-221A | 1 | BUMPER,REAR<br>PAINT TO MATCH | | | |
| 50-223C<br>FC01-50-312 | 1 | FOAM(R),ENGY.ABS.-RR BUMP | | | |
| 50-224E<br>FC01-50-313 | 1 | FOAM(L),ENGY.ABS.-RR BUMP | | | |
| 50-230<br>FB01-50-330B | 1 | REINFORCEMENT,BUMPER | | | |
| 50-270<br>FB01-50-280 | 1 | STAY(R),RR. BUMPER | | | |
| 50-270Z<br>FB01-50-290 | 1 | STAY(L),RR. BUMPER | | | |
| 50-285<br>G030-50-285 | 2 | GASKET,SEAL | | | |
| 50-321<br>FB01-50-321 | 12 | GASKET'A',REAR BUMPER | | | |
| 50-350A<br>FB01-50-350 | 1 | PLATE(C),SET-REAR BUMPER | | | |
| 50-360A<br>FB01-50-360 | 1 | PLATE(R),SET-REAR BUMPER | | | |
| 50-370A<br>FB01-50-370 | 1 | PLATE(L),SET-RR BUMPER S. | | | |
| 50-380B | | PLATE(R),SET-RR BUMPER S. | | | |

## 5010 REAR BUMPER

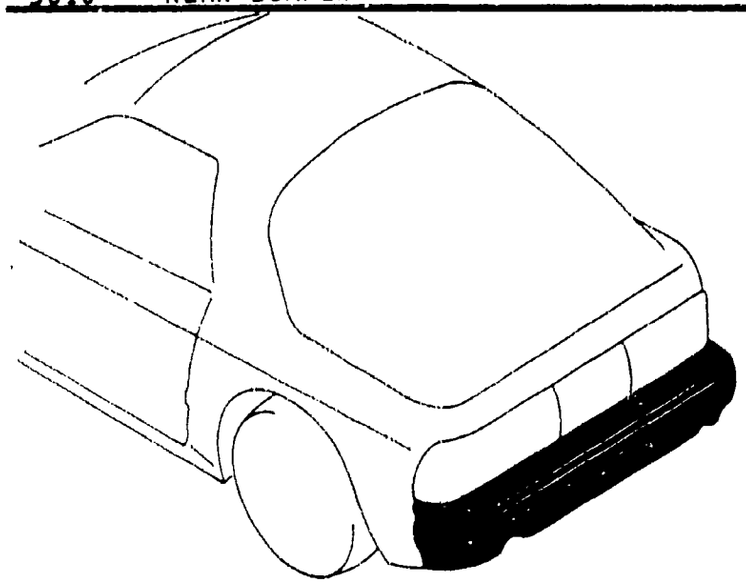

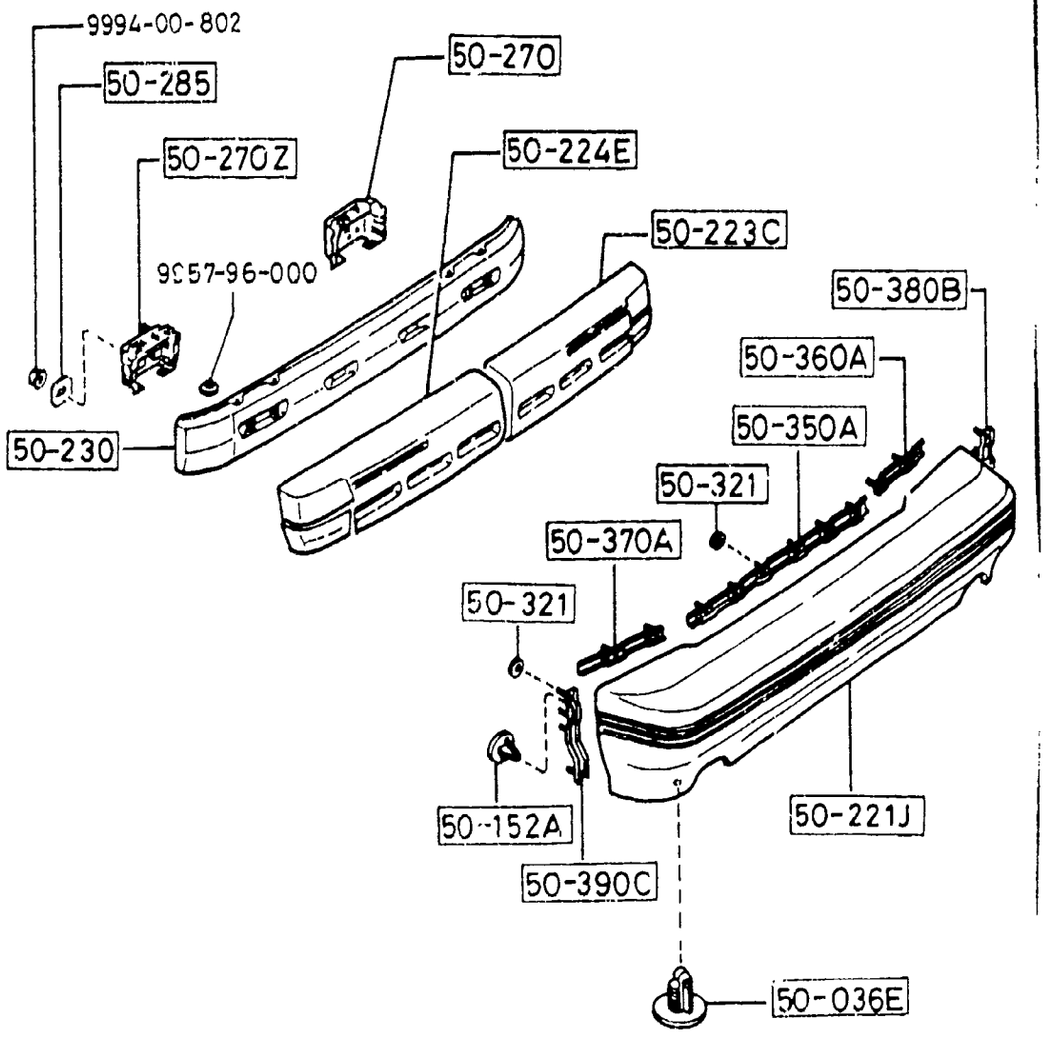


| PART NO. | QTY | MODEL/RESTRICTION | MODEL/RESTRICTION | MODEL/RESTRICTION | FROM-TO |
|---|---|---|---|---|---|
| CONT'D | | | | | |
| FB01-50-380 | 1 | | | | |
| 50-390C | | PLATE(L),SET-RR BUMPER S. | | | |
| FB01-50-390 | 1 | | | | |

## 5020 HEAD LAMP CLEANER

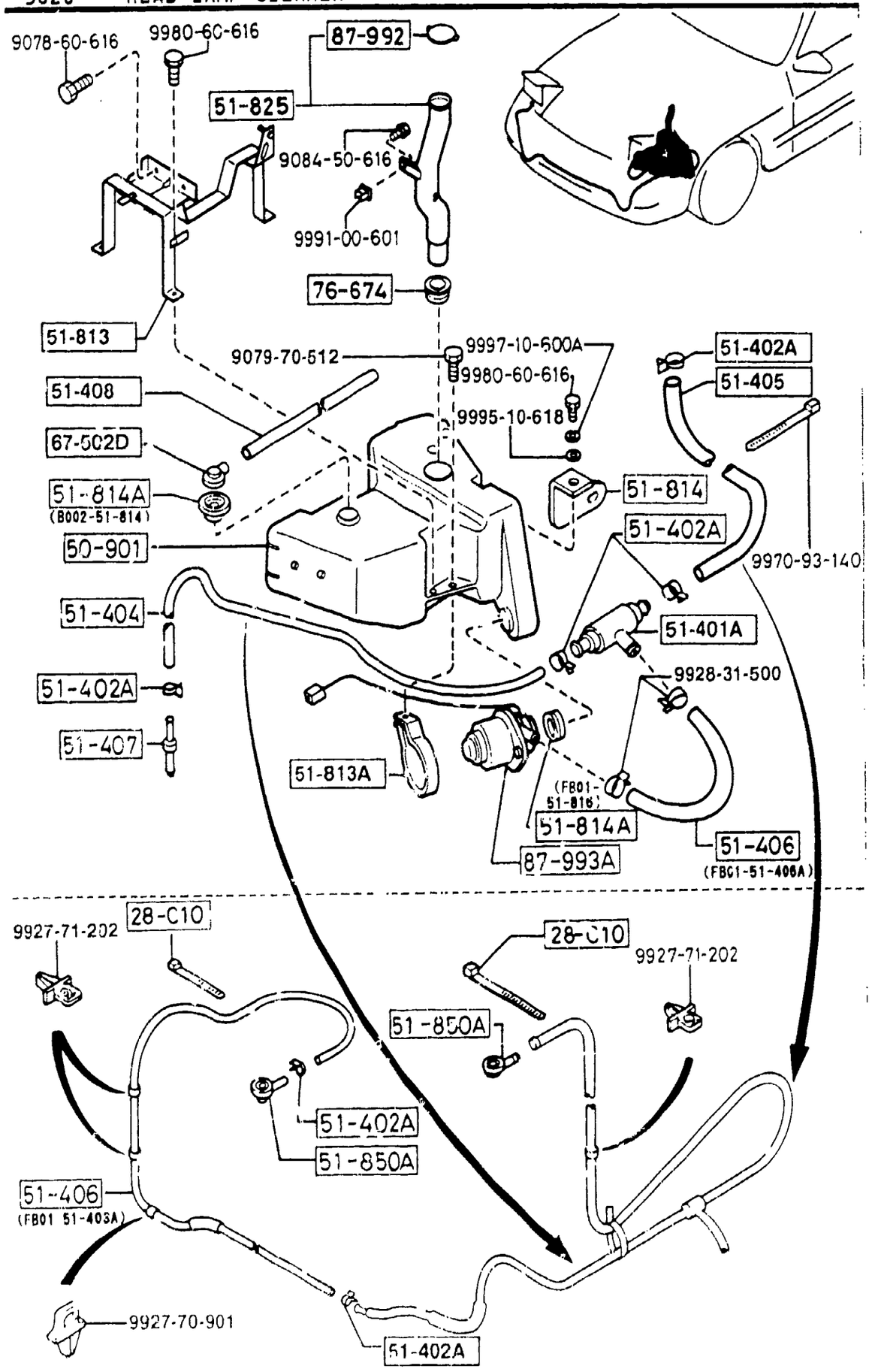


| PART NO. | QTY | MODEL/RESTRICTION | MODEL/RESTRICTION | MODEL/RESTRICTION | FROM-TO |
|---|---|---|---|---|---|
| 28-C10 | | BAND,PIPE | | | |
| B214-28-C10 | 2 | | | | |
| 50-901 | | TANK,WASHER | | | |
| FC01-51-812 | 1 | | | | |
| 51-401A | | VALVE,CHECK | | | |
| G113-51-401 | 1 | | | | |
| 51-402A | | CLIP | | | |
| 3972-51-402 | 6 | | | | |
| 51-404 | | PIPE | | | |
| FB01-51-404A | 1 | | | | |
| 51-405 | | PIPE | | | |
| FB01-51-405A | 1 | | | | |
| 51-406 | | PIPE | | | |
| FB01-51-403A | 1 | | | | |
| FB01-51-406A | 1 | | | | |
| 51-407 | | JOINT | | | |
| 8965-51-406 | 1 | | | | |
| 51-408 | | PIPE | | | |
| FB01-51-407 | 1 | | | | |
| 51-813 | | HOLDER'A' | | | |
| FB01-51-814 | 1 | | | | |
| 51-813A | | HOLDER,MOTOR-H.L.CLEANER | | | |
| FC01-51-813 | 1 | | | | |
| 51-814 | | HOLDER'B' | | | |
| FB01-51-819 | 1 | | | | |
| 51-814A | | GROMMET,WASHER TANK | | | |
| B002-51-814 | 1 | | | | |
| FB01-51-816 | 1 | | | | |

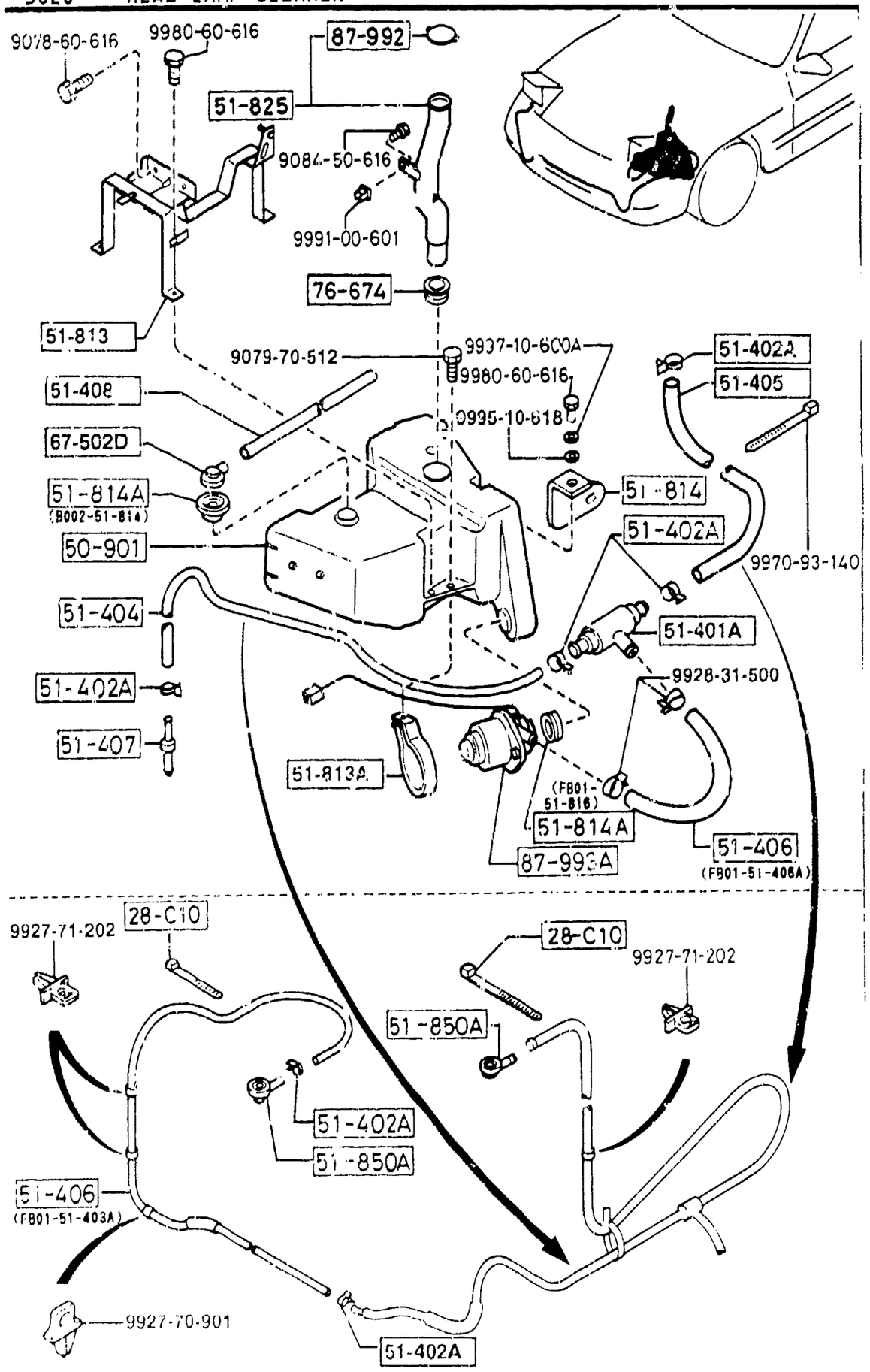


AUFA03

5020 -2 * HEAD LAMP CLEANER

| PART NO. | QTY | MODEL/RESTRICTION | MODEL/RESTRICTION | MODEL/RESTRICTION | FROM-TO |
|---|---|---|---|---|---|
| 51-825<br>FB01-51-82XC | 1 | PIPE,FILLER-WASHER TANK | | | |
| 51-850A<br>FB01-51-850 | 2 | NOZZLE,WASHER-H.L.CLEANER | | | |
| 67-502D<br>S092-67-502 | 1 | JOINT'L' | | | |
| 76-674<br>1243-76-674 | 1 | GROMMET | | | |
| 87-992<br>H005-50-905 | 1 | CAP,TANK | | | |
| 87-993A<br>FC01-51-811 | 1 | PUMP KIT | | | |

CAT. AUFA03-07

1993-12

## 5030 WINDOW MOULDINGS

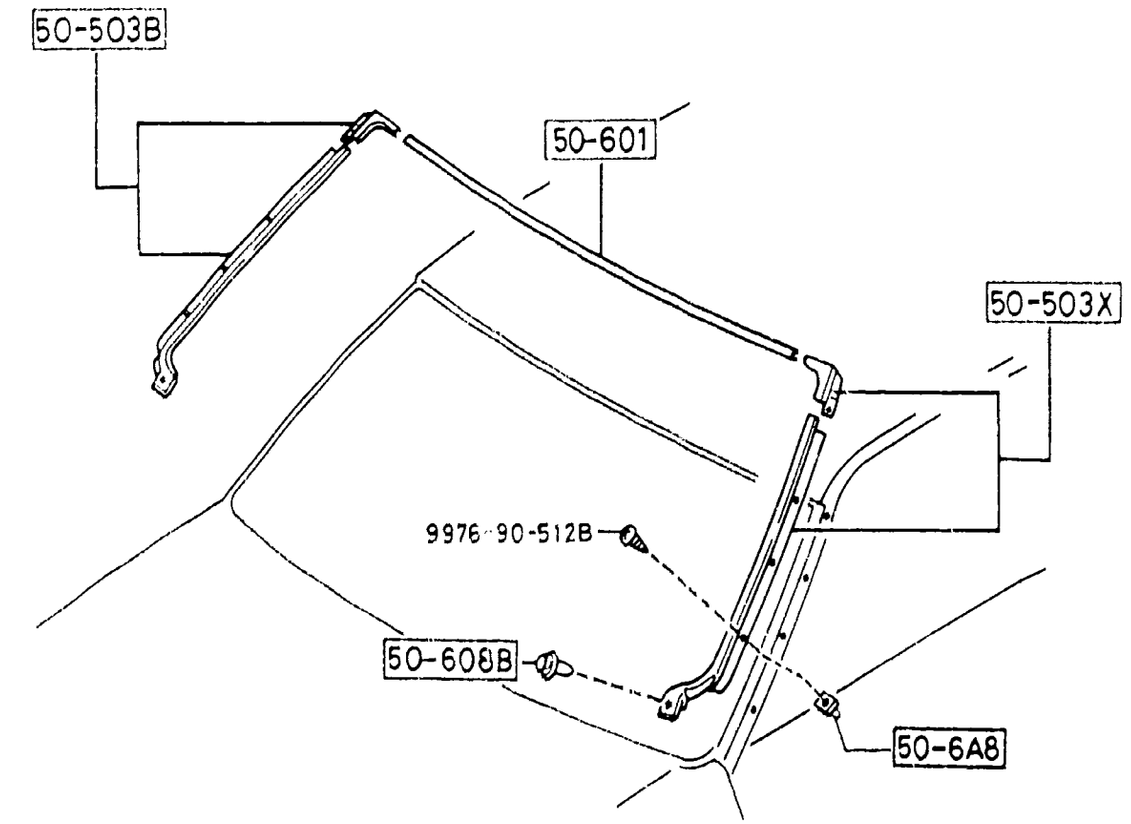


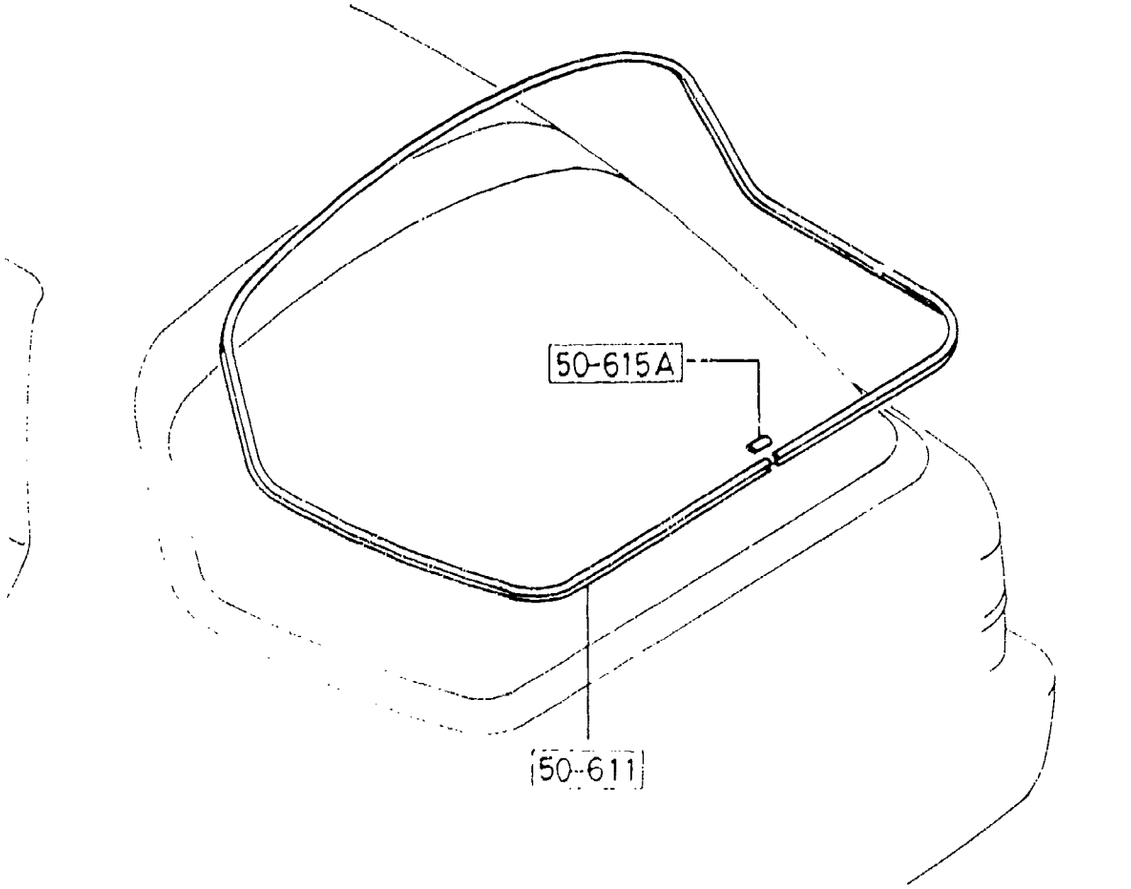


| PART NO. | QTY | MODEL/RESTRICTION | MODEL/RESTRICTION | MODEL/RESTRICTION | FROM-TO |
|---|---|---|---|---|---|
| 50-503B<br>8AF1-50-860 | 1 | MOULD SET(R),F. SIDE | | | |
| 50-503X<br>8AF1-50-870 | 1 | MOULD SET(L),F. SIDE | | | |
| 50-6A8<br>FB01-50-6A8 | 8 | GROMMET,SCREW-F. WIN D.MLD | | | |
| 50-601<br>FB01-50-601A | 1 | MOULD,WINDOW-FRONT | | | |
| 50-608B<br>H260-50-6A7 | 2 | FASTENER,F.WIND.MLD. | | | |
| 50-611<br>FB01-50-611C | 1 | MOULD,RR.WINDOW (CPE) | | | |
| 50-615A<br>FB01-50-615C | 1 | JOINT,BACK WINDOW MO ULD (CPE) | | | |

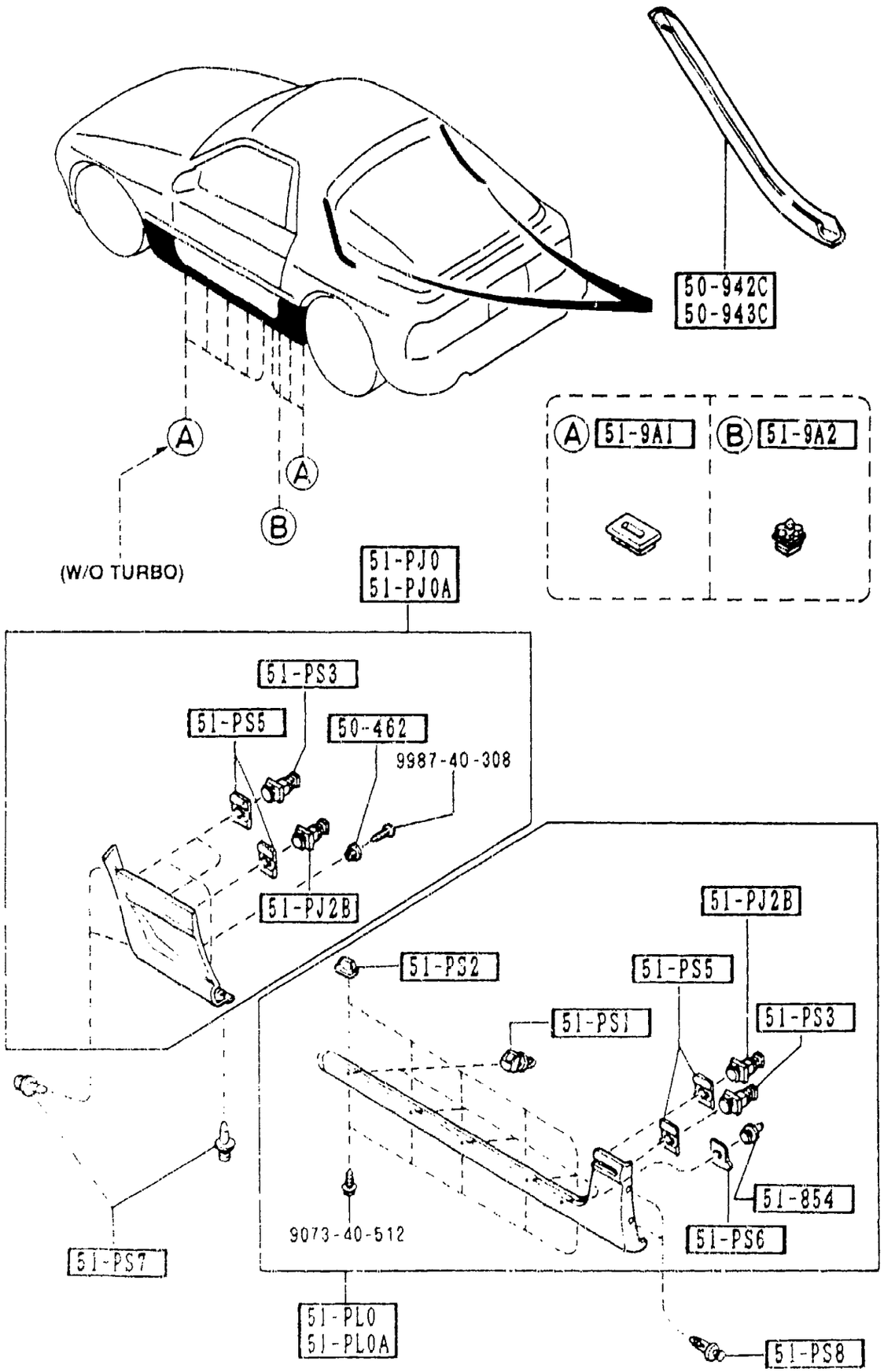




| PART NO. | QTY | MODEL/RESTRICTION | MODEL/RESTRICTION | MODEL/RESTRICTION | FROM-TO |
|---|---|---|---|---|---|
| 50-462 | | CLIP,STEP MOULD | | | |
| FC17-51-PS9 | 2 | (TURBO) | | | |
| 50-942C | | MOULD(R),REAR | | | |
| FB01-50-942A | 1 | REGULAR TYPE | | | |
| 50-943C | | MOULD(L),REAR | | | |
| FB01-50-943A | 1 | REGULAR TYPE | | | |
| 51-PJ0 | | MOULD(R),STEP-FRT | | | |
| FC17-51-PJ0A | 1 | (TURBO) | | | |
| PZ | EXT- | PZ BRILLIANT BLACK | | | |
| SQ | EXT- | SQ BLAZE RED | | | |
| UC | EXT- | UC CRYSTAL WHITE | | | |
| 5N | EXT- | 5N BRAVE BLUE MC | | | |
| 51-PJ0A | | MOULD(L),STEP-FRT | | | |
| FC17-51-PP0A | 1 | (TURBO) | | | |
| PZ | EXT- | PZ BRILLIANT BLACK | | | |
| SQ | EXT- | SQ BLAZE RED | | | |
| UC | EXT- | UC CRYSTAL WHITE | | | |
| 5N | EXT- | 5N BRAVE BLUE MC | | | |
| 51-PJ2B | | CLIP | | | |
| FC17-51-PJ2 | 4 | (TURBO) | | | |
| 51-PL0 | | MOULD(R),STEP-RR | | | |
| FC17-51-PK0B | 1 | (TURBO) | | | |
| PZ | EXT- | PZ BRILLIANT BLACK | | | |
| SQ | EXT- | SQ BLAZE RED | | | |
| UC | EXT- | UC CRYSTAL WHITE | | | |
| 5N | EXT- | 5N BRAVE BLUE MC | | | |
| 51-PL0A | | MOULD(L),STEP-RR | | | |
| FC17-51-PR0B | 1 | (TURBO) | | | |
| PZ | EXT- | PZ BRILLIANT BLACK | | | |
| SQ | EXT- | SQ BLAZE RED | | | |

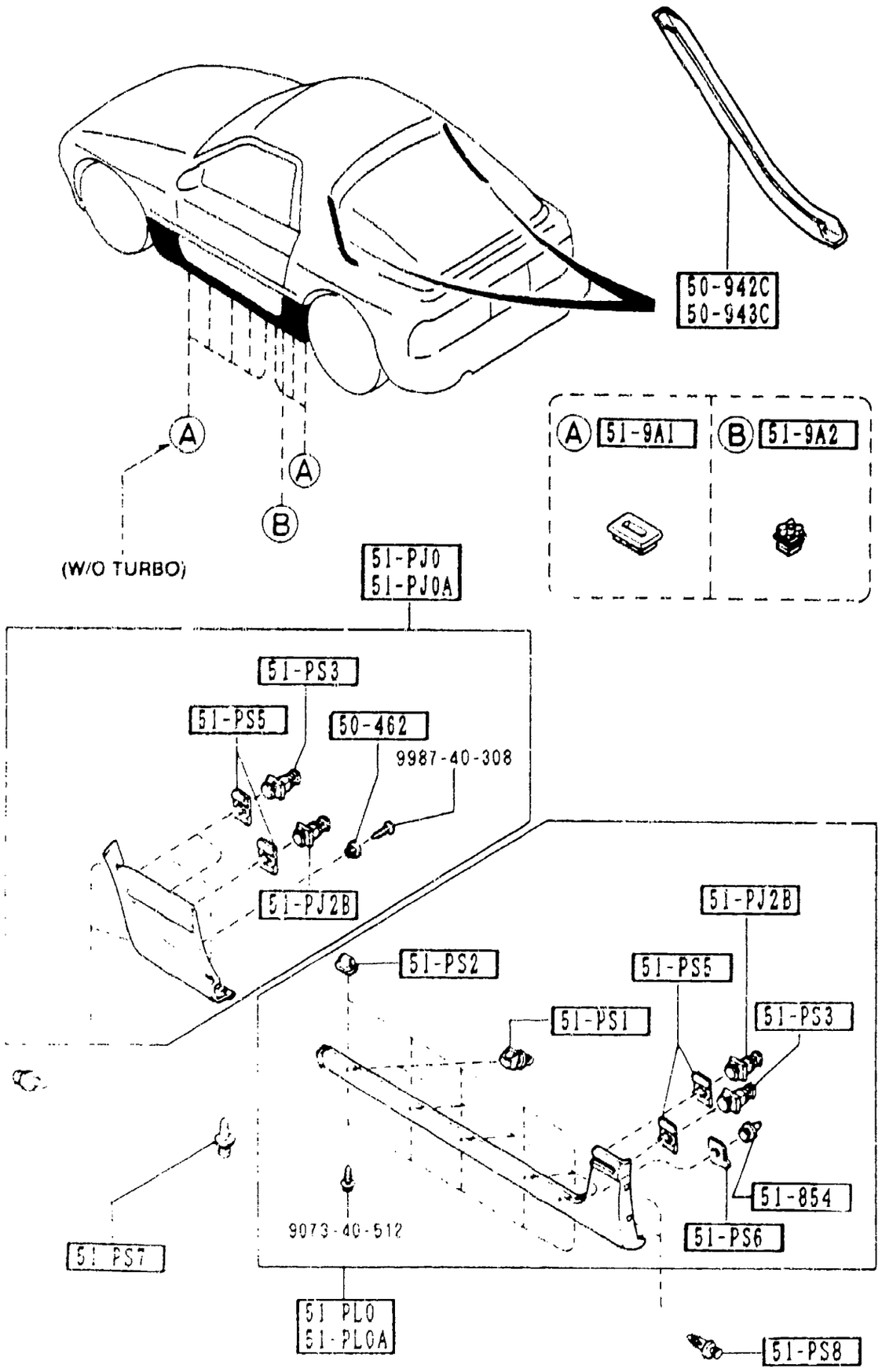




| PART NO. | QTY | MODEL/RESTRICTION | MODEL/RESTRICTION | MODEL/RESTRICTION | FROM-TO |
|---|---|---|---|---|---|
| CONT'D | | | | | |
| UC | EXT- | UC CRYSTAL WHITE | | | |
| 5N | EXT- | 5N BRAVE BLUE MC | | | |
| 51-PS1 | | CLIP | | | |
| FC17-51-PS1A | 10 | (TURBO) | | | |
| 51-PS2 | | SCREW,GROMMET | | | |
| FC17-51-PS2 | 10 | (TURBO) | | | |
| 51-PS3 | | CLIP | | | |
| FC17-51-PS3 | 6 | (TURBO) | | | |
| 51-PS5 | | BRACKET,NO.2 | | | |
| FC17-51-PS5 | 10 | (TURBO) | | | |
| 51-PS6 | | BRACKET,NO.2 | | | |
| FC17-51-PS6 | 1 | (FOR RIGHT) (TURBO) | | | |
| FC18-51-PS6 | 1 | (FOR LEFT) (TURBO) | | | |
| 51-PS7 | | RIVET | | | |
| FC17-51-PS7 | 6 | (TURBO) | | | |
| PZ | EXT- | PZ BRILLIANT BLACK | | | |
| SQ | EXT- | SQ BLAZE RED | | | |
| UC | EXT- | UC CRYSTAL WHITE | | | |
| 5N | EXT- | 5N BRAVE BLUE MC | | | |
| 51-PS8 | | RIVET | | | |
| FC17-51-PS8 | 4 | (TURBO) | | | |
| PZ | EXT- | PZ BRILLIANT BLACK | | | |
| SQ | EXT- | SQ BLAZE RED | | | |
| UC | EXT- | UC CRYSTAL WHITE | | | |
| 5N | EXT- | 5N BRAVE BLUE MC | | | |
| 51-854 | | FASTENER | | | |
| B129-51-993 | 2 | (TURBO) | | | |
| 51-9A1 | | PLUG'A',BLIND-S.SPOILER | | | |

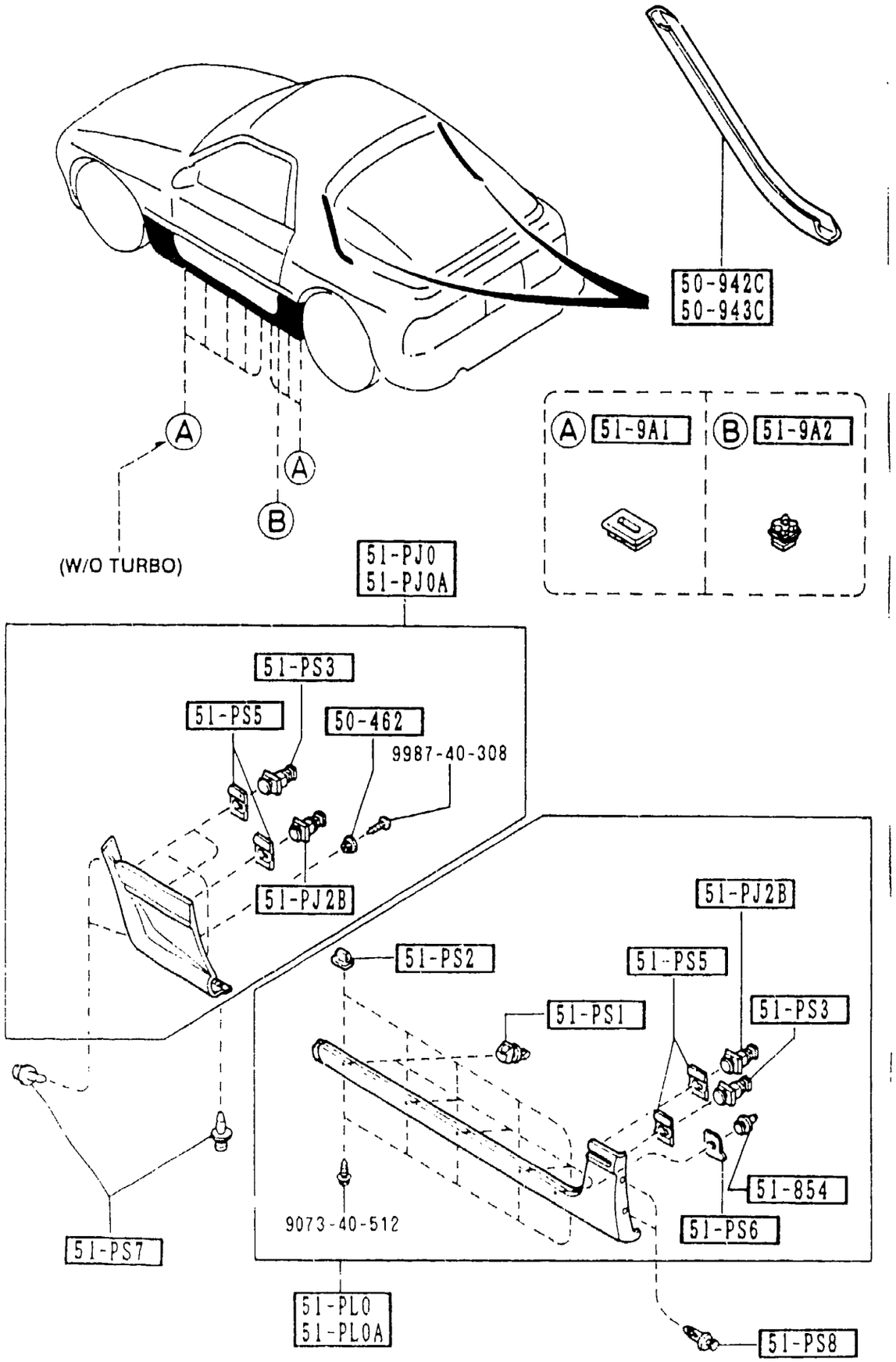


5040 -3 * BODY MOULDINGS
(COUPE)

| PART NO. | QTY | MODEL/RESTRICTION | MODEL/RESTRICTION | MODEL/RESTRICTION | FROM-TO |
|---|---|---|---|---|---|
| CONT'D | | | | | |
| FB03-51-9A1 | 6 | (TURBO) | | | |
| FB03-51-9A1 | 16 | (W/O TURBO) | | | |
| 51-9A2 | | PLUG'B',BLIND-S.SPOILER | | | |
| FB03-51-9A2 | 2 | | | | |

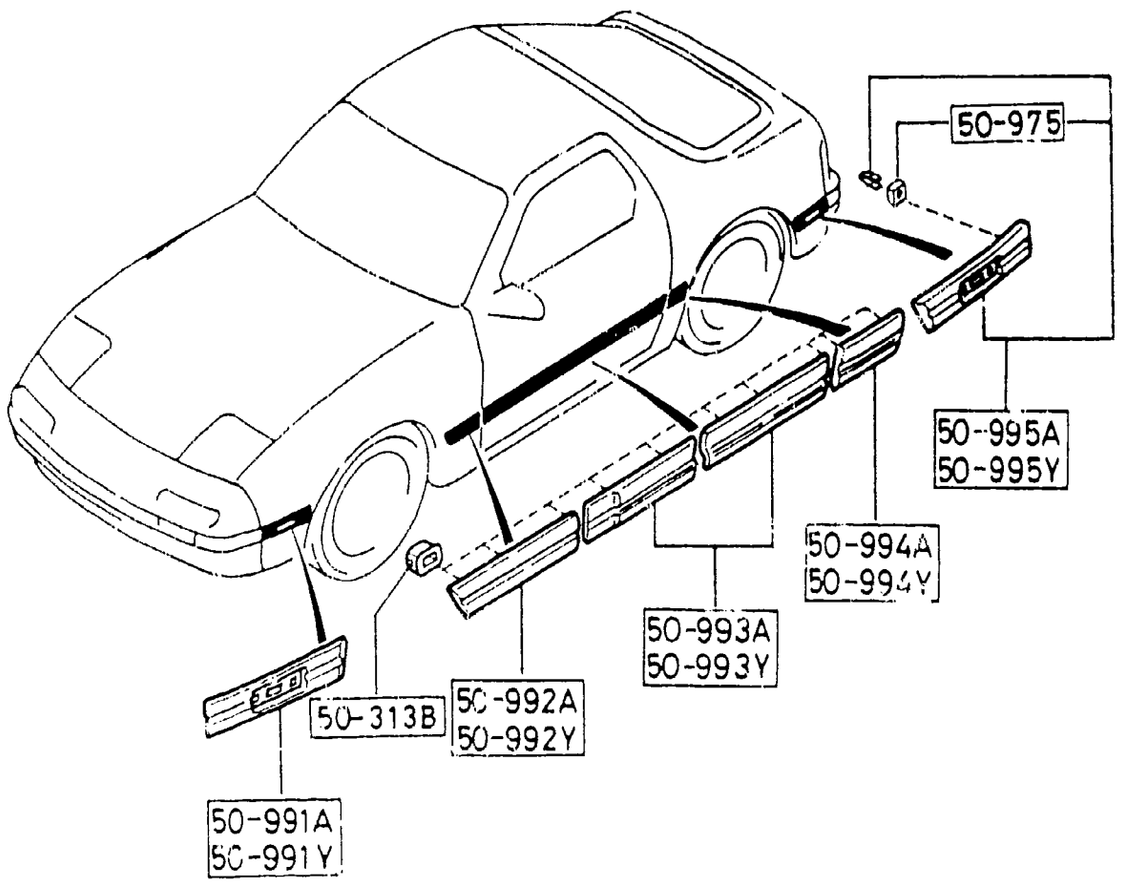


| PART NO. | QTY | MODEL/RESTRICTION | MODEL/RESTRICTION | MODEL/RESTRICTION | FROM-TO |
|---|---|---|---|---|---|
| 50-313B | | GROMMET,PROTECTOR | | | |
| H115-50-313A | 20 | | | | |
| 50-975 | | GASKET | | | |
| FB01-50-945 | 2 | | | | |
| 50-991A | | PROTECTOR'A'(R),SIDE | | | |
| FC01-50-6R0A | 1 | | | | |
| PZ | EXT- | PZ BRILLIANT BLACK | | | |
| SQ | EXT- | SQ BLAZE RED | | | |
| UC | EXT- | UC CRYSTAL WHITE | | | |
| 5N | EXT- | 5N BRAVE BLUE MC | | | |
| 50-991Y | | PROTECTOR ,SIDE | | | |
| FC01-50-6S0A | 1 | | | | |
| PZ | EXT- | PZ BRILLIANT BLACK | | | |
| SQ | EXT- | SQ BLAZE RED | | | |
| UC | EXT- | UC CRYSTAL WHITE | | | |
| 5N | EXT- | 5N BRAVE BLUE MC | | | |
| 50-992A | | PROTECTOR'B'(R),SIDE | | | |
| FC01-50-681A | 1 | (W/O TURBO) | | | |
| PZ | EXT- | PZ BRILLIANT BLACK | | | |
| SQ | EXT- | SQ BLAZE RED | | | |
| UC | EXT- | UC CRYSTAL WHITE | | | |
| 5N | EXT- | 5N BRAVE BLUE MC | | | |
| 50-992Y | | PROTECTOR'B'(L),SIDE | | | |
| FC01-50-691A | 1 | (W/O TURBO) | | | |
| PZ | EXT- | PZ BRILLIANT BLACK | | | |
| SQ | EXT- | SQ BLAZE RED | | | |
| UC | EXT- | UC CRYSTAL WHITE | | | |
| 5N | EXT- | 5N BRAVE BLUE MC | | | |
| 50-993A | | PROTECTOR'C'(R),SIDE | | | |
| FC01-50-682 | 1 | | | | |
| PZ | EXT- | PZ BRILLIANT BLACK | | | |

## 5060 SIDE PROTECTORS

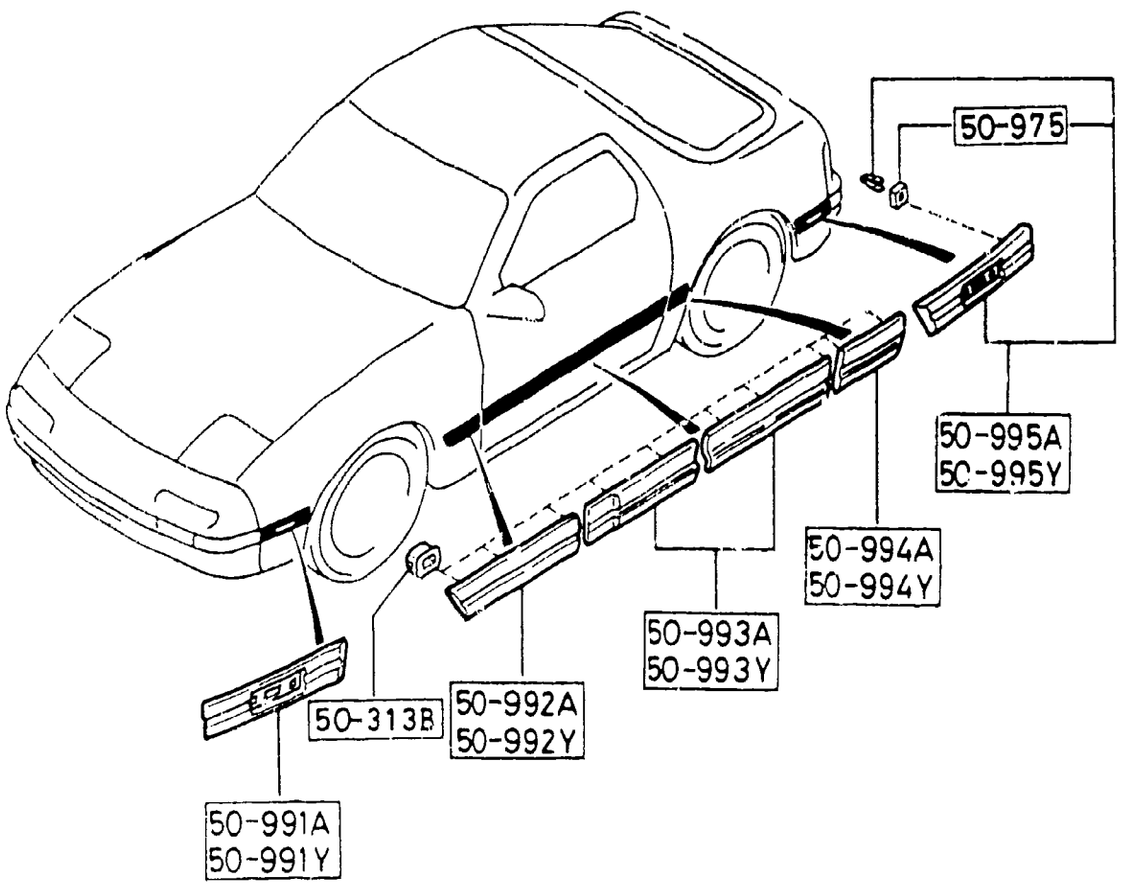


| PART NO. | QTY | MODEL/RESTRICTION | MODEL/RESTRICTION | MODEL/RESTRICTION | FROM-TO |
|---|---|---|---|---|---|
| CONT'D | | | | | |
| SQ | EXT- | SQ BLAZE RED | | | |
| UC | EXT- | UC CRYSTAL WHITE | | | |
| 5N | EXT- | 5N BRAVE BLUE MC | | | |
| +---------+ | | | | | |
| \| 50-993Y \| | | PROTECTOR'C'(L),SIDE | | | |
| +---------+ | | | | | |
| FC01-50-692 | 1 | | | | |
| PZ | EXT- | PZ BRILLIANT BLACK | | | |
| SQ | EXT- | SQ BLAZE RED | | | |
| UC | EXT- | UC CRYSTAL WHITE | | | |
| 5N | EXT- | 5N BRAVE BLUE MC | | | |
| +---------+ | | | | | |
| \| 50-994A \| | | PROTECTOR'D'(R),SIDE | | | |
| +---------+ | | | | | |
| FC01-50-683A | 1 | (W/O TURBO) | | | |
| PZ | EXT- | PZ BRILLIANT BLACK | | | |
| SQ | EXT- | SQ BLAZE RED | | | |
| UC | EXT- | UC CRYSTAL WHITE | | | |
| 5N | EXT- | 5N BRAVE BLUE MC | | | |
| +---------+ | | | | | |
| \| 50-994Y \| | | PROTECTOR'D'(L),SIDE | | | |
| +---------+ | | | | | |
| FC01-50-693A | 1 | (W/O TURBO) | | | |
| PZ | EXT- | PZ BRILLIANT BLACK | | | |
| SQ | EXT- | SQ BLAZE RED | | | |
| UC | EXT- | UC CRYSTAL WHITE | | | |
| 5N | EXT- | 5N BRAVE BLUE MC | | | |
| +---------+ | | | | | |
| \| 50-995A \| | | PROTECTOR'E'(R),SIDE | | | |
| +---------+ | | | | | |
| FC01-50-6V0A | 1 | | | | |
| PZ | EXT- | PZ BRILLIANT BLACK | | | |
| SQ | EXT- | SQ BLAZE RED | | | |
| UC | EXT- | UC CRYSTAL WHITE | | | |
| 5N | EXT- | 5N BRAVE BLUE MC | | | |
| +---------+ | | | | | |
| \| 50-995Y \| | | PROTECTOR'E'(L),SIDE | | | |
| +---------+ | | | | | |
| FC01-50-SW0A | 1 | | | | |
| PZ | EXT- | PZ BRILLIANT BLACK | | | |
| SQ | EXT- | SQ BLAZE RED | | | |
| UC | EXT- | UC CRYSTAL WHITE | | | |

## 5060 SIDE PROTECTORS

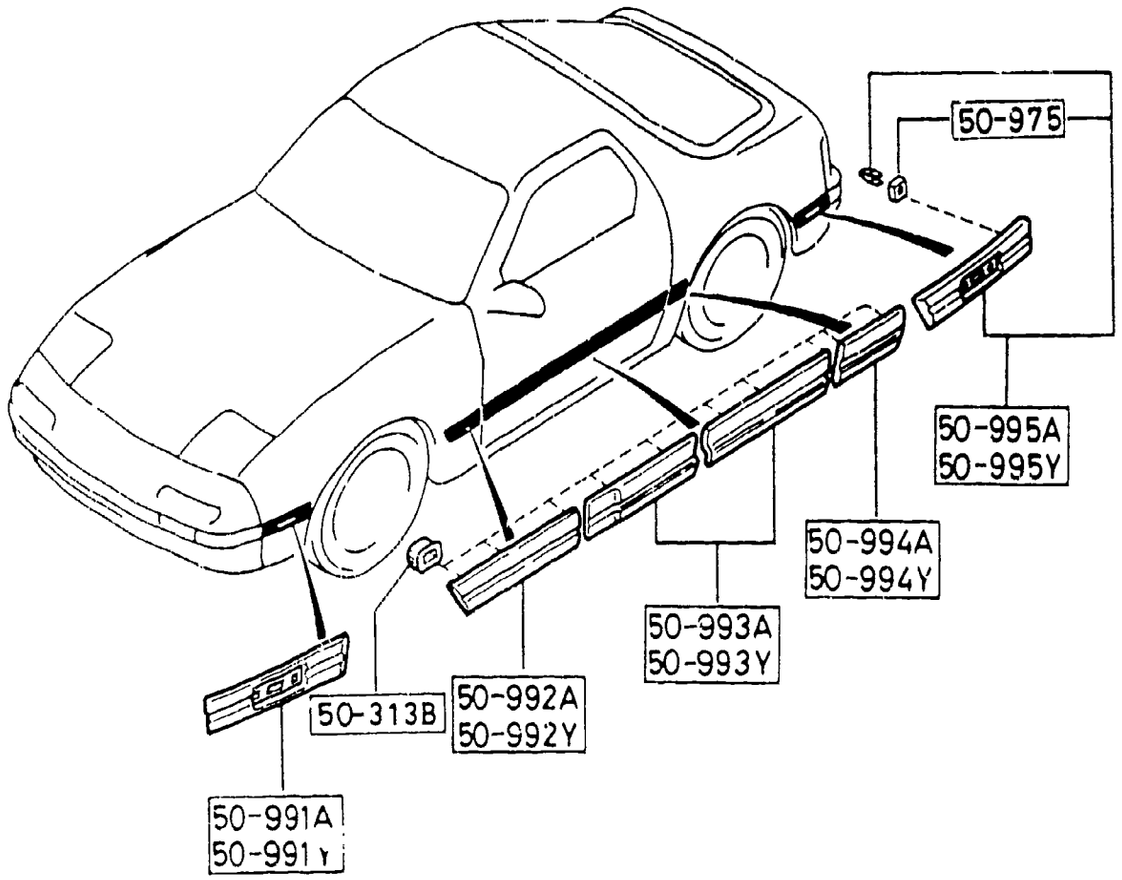


| PART NO. | QTY | MODEL/RESTRICTION | MODEL/RESTRICTION | MODEL/RESTRICTION | FROM-TO |
|---|---|---|---|---|---|
| CONT'D | | | | | |
| 5N | EXT- | 5N BRAVE BLUE MC | | | |

## 5100 HEAD LAMPS

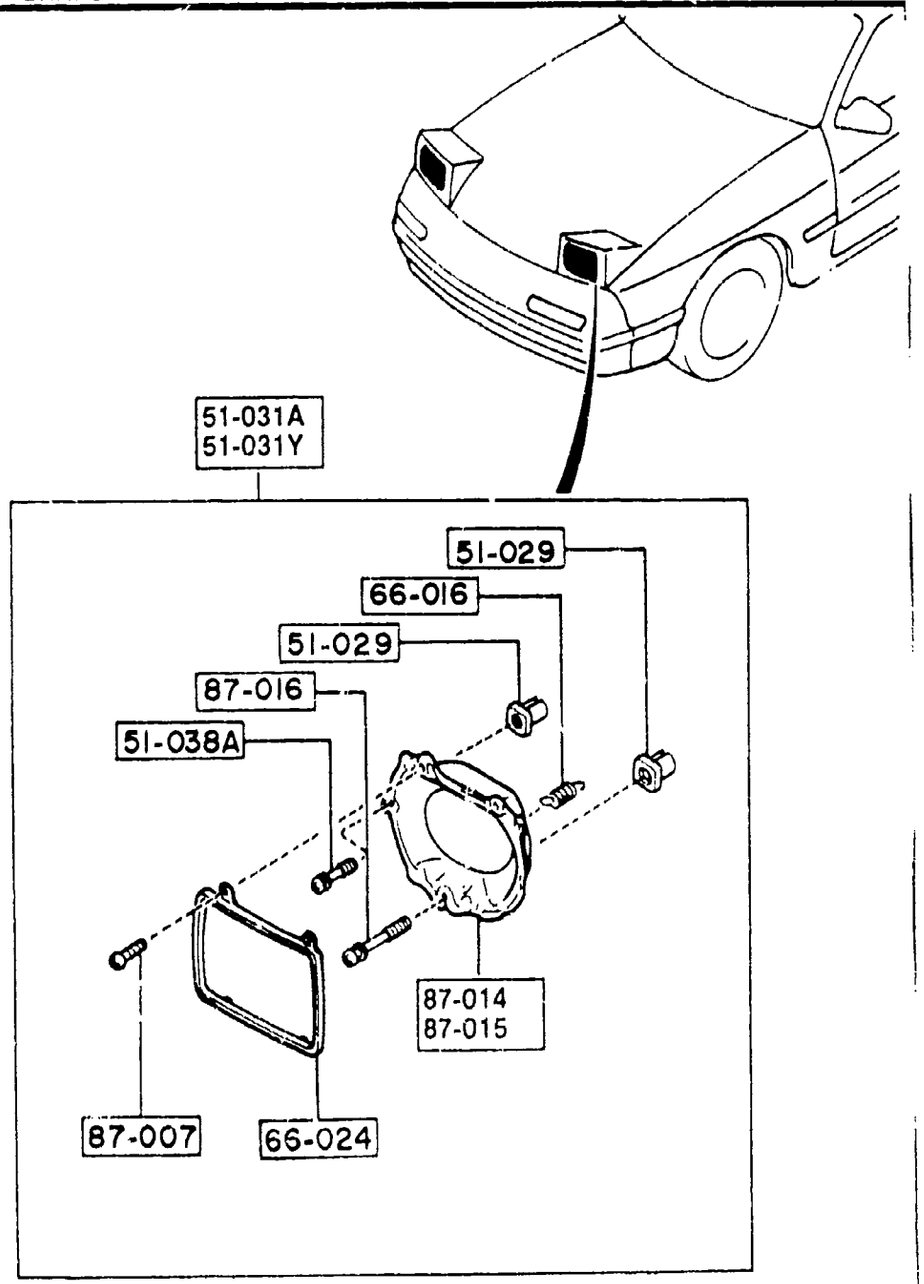


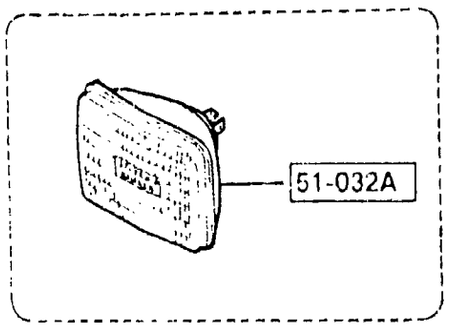


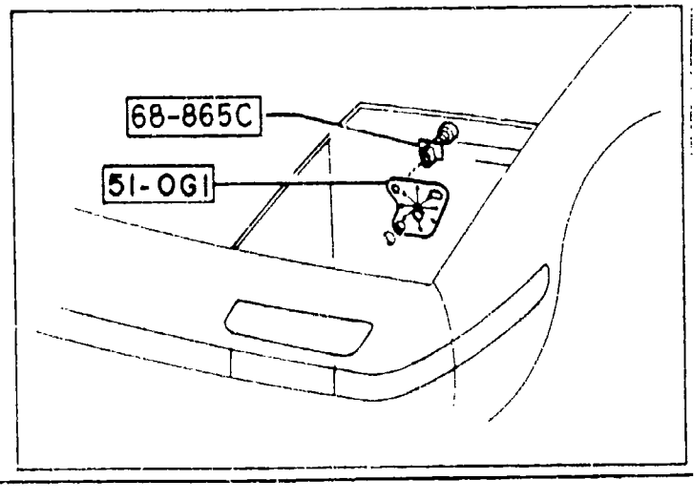


| PART NO. | QTY | MODEL/RESTRICTION | MODEL/RESTRICTION | MODEL/RESTRICTION | FROM-TO |
|---|---|---|---|---|---|
| 51-0G1<br>FB01-51-0G1 | 2 | COVER,SEAL-SHROUD | | | |
| 51-029<br>0483-66-061A | 4 | GROMMET,SCREW | | | |
| 51-031A<br>8BF1-51-032 | 1 | LAMP SUB SET(R),HEAD | | | |
| 51-031Y<br>8BF1-51-042 | 1 | LAMP SUB SET(L),HEAD | | | |
| 51-032A<br>FB06-51-031 | 2 | UNIT,HEAD LAMP<br>GTE-SYLVANIA | | | |
| 51-038A<br>FB01-51-047 | 2 | SCREW,ADJUST | | | |
| 66-016<br>FC42-51-036 | 2 | SPRING,ADJUST | | | |
| 66-024<br>BA03-51-033 | 2 | RING,RETAINING | | | |
| 68-865C<br>B006-68-865 | 6 | FASTENER | | | |
| 87-007<br>8239-51-035 | 8 | SCREW | | | |
| 87-014<br>FB01-51-032 | 1 | RING(R)MOUNTING | | | |
| 87-015<br>FB01-51-042 | 1 | RING(L)MOUNTING | | | |
| 87-016<br>FB01-51-037 | 2 | SCREW,ADJUST | | | |

## 5103 HEAD LAMP RETRACTORS

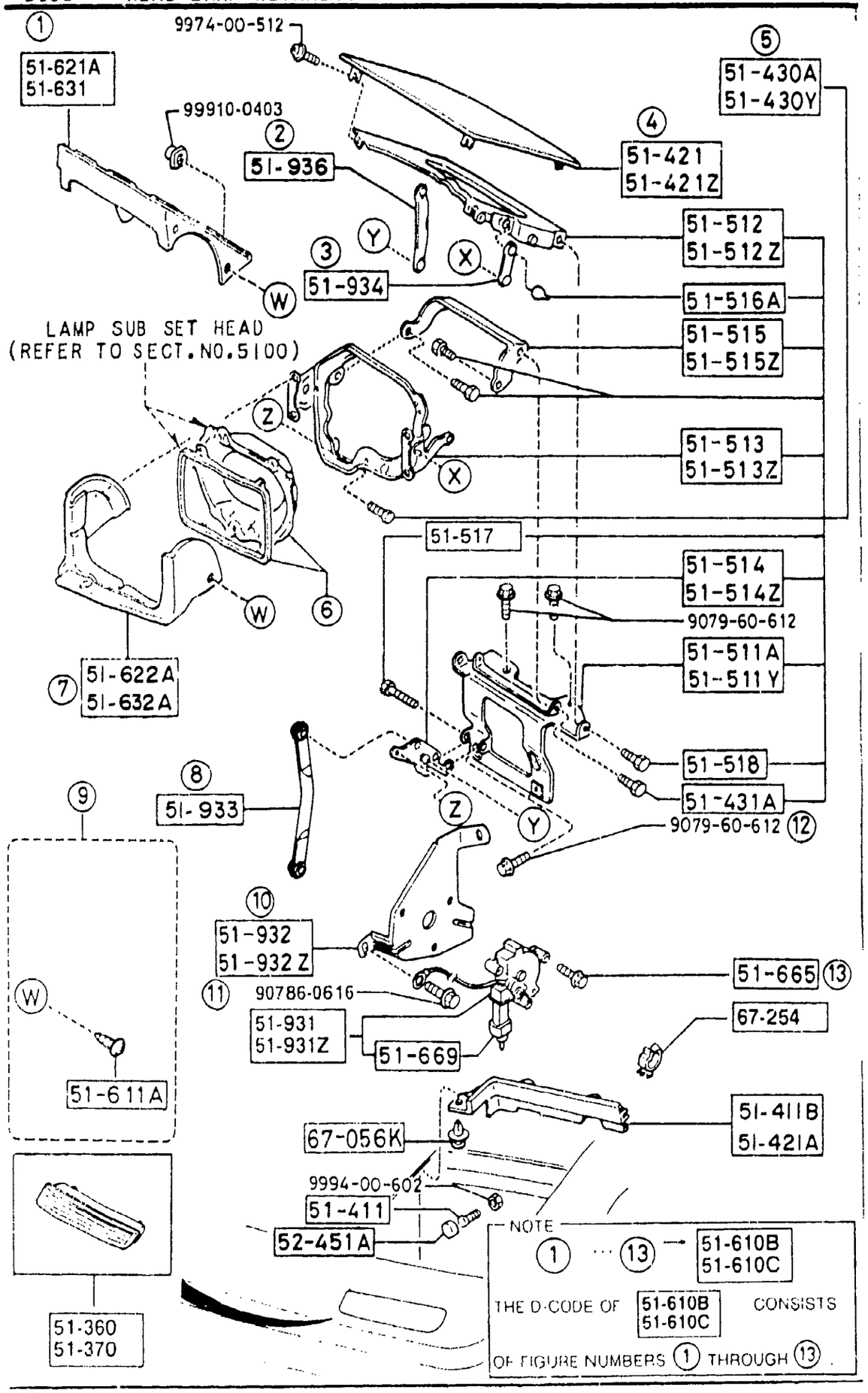


| PART NO. | QTY | MODEL/RESTRICTION | MODEL/RESTRICTION | MODEL/RESTRICTION | FROM-TO |
|---|---|---|---|---|---|
| 51-360<br>FB01-51-360B | 1 | COVER(R),PASSING HOLE | | | |
| 51-370<br>FB01-51-370B | 1 | COVER(L),PASSING HOLE | | | |
| 51-411<br>8871-51-411 | 2 | SCREW,STOPPER | | | |
| 51-411B<br>FB01-51-411A | 1 | PROTECTOR(R),RETRACTABLE<br>(W/O H.L.CLEANER) | | | |
| 51-421<br>FB01-51-623 | 1 | LID(R),LAMP | | | |
| 51-421A<br>FB01-51-421A | 1 | PROTECTOR(L),RETRACTABLE<br>(W/O H.L.CLEANER) | | | |
| 51-421Z<br>FB01-51-633 | 1 | LID(L),LAMP | | | |
| 51-430A<br>FB01-51-510F | 1 | HINGE(R),LID-LAMP | | | |
| 51-430Y<br>FB01-51-520F | 1 | HINGE(L),LID-LAMP | | | |
| 51-431A<br>H001-51-511 | 10 | BOLT,HINGE | | | |
| 51-511A<br>FB01-51-511A | 1 | BRACKET(R),HINGE-LAMP LID | | | |
| 51-511Y<br>FB01-51-521A | 1 | BRACKET(L),HINGE-LAMP LID | | | |
| 51-512<br>FB01-51-512 | 1 | FRAME(R),LAMP LID | | | |
| 51-512Z<br>FB01-51-522 | 1 | FRAME(L),LAMP LID | | | |

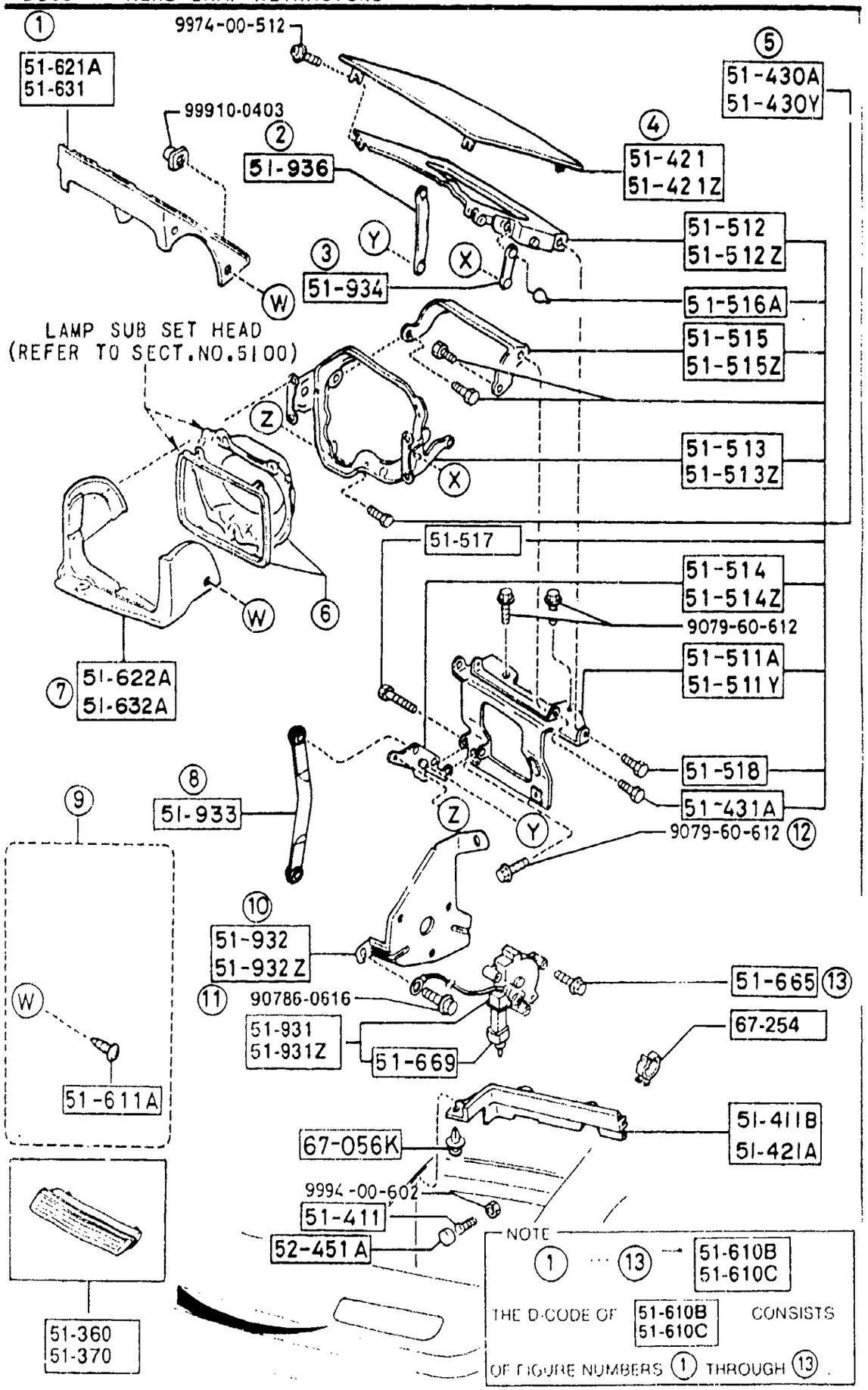


AUFA03

5103 -2 HEAD LAMP RETRACTORS

| PART NO. | QTY | MODEL/RESTRICTION | MODEL/RESTRICTION | MODEL/RESTRICTION | FROM-TO |
|---|---|---|---|---|---|
| 51-513 | | HOUSING(R),LAMP-LID HINGE | | | |
| FB01-51-513D | 1 | | | | |
| 51-513Z | | HOUSING(L),LAMP-LID HINGE | | | |
| FB01-51-523D | 1 | | | | |
| 51-514 | | ARM(R),LOWER-LID HINGE | | | |
| FB01-51-514A | 1 | | | | |
| 51-514Z | | ARM(L),LOWER-LID HINGE | | | |
| FB01-51-524A | 1 | | | | |
| 51-515 | | ARM(R),UPPER-LID HINGE | | | |
| FB01-51-515 | 1 | | | | |
| 51-515Z | | ARM(L),UPPER-LID HINGE | | | |
| FB01-51-525 | 1 | | | | |
| 51-516A | | CAP,HINGE-H.L.RETRACTABLE | | | |
| FB01-51-516 | 10 | | | | |
| 51-517 | | BOLT,HINGE-H.L.RETRACTABL | | | |
| FB01-51-517 | 2 | | | | |
| 51-518 | | BOLT,HINGE-H.L.RETRACTABL | | | |
| FB01-51-518 | 4 | | | | |
| 51-610B | | RETRACTOR SET(R),HEAD L. | | | |
| 8AF2-51-610 | 1 | (W/O H.L.CLEANER) | | | |
| 51-610C | | RETRACTOR SET(L),HEAD L. | | | |
| 8AF2-51-650 | 1 | (W/O H.L.CLEANER) | | | |
| 51-611A | | SCREW,HEAD LAMP BEZEL | | | |
| FB01-51-611 | 12 | (W/O H.L.CLEANER) | | | |
| 51-621A | | BEZEL(R),HEAD LAMP-UPPER | | | |
| FB01-51-621A | 1 | (W/O H.L.CLEANER) | | | |
| 51-622A | | BEZEL(R),HEAD LAMP-LOWER | | | |
| FB01-51-622A | 1 | (W/O H.L.CLEANER) | | | |

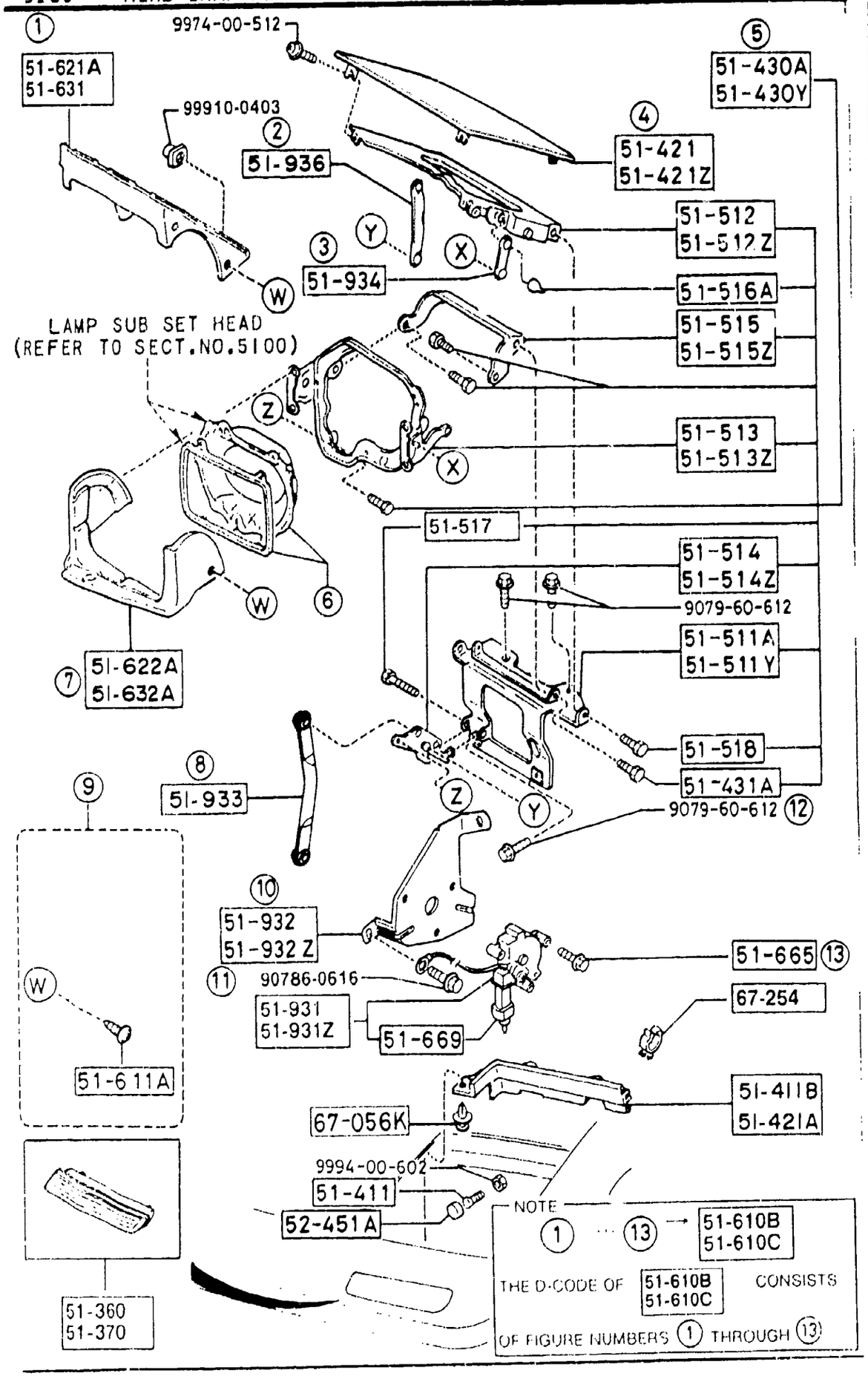


AUFA03



| PART NO. | QTY | MODEL/RESTRICTION | MODEL/RESTRICTION | MODEL/RESTRICTION | FROM-TO |
|---|---|---|---|---|---|
| 51-631<br>FB01-51-631A | 1 | BEZEL(L),HEAD LAMP-UPPER<br>(W/O H.L.CLEANER) | | | |
| 51-632A<br>FB01-51-632A | 1 | BEZEL(L),HEAD LAMP-LOWER<br>(W/O H.L.CLEANER) | | | |
| 51-665<br>FB01-51-665 | 6 | BOLT,MOTOR-RETRACT H/LAMP<br>(W/O H.L.CLEANER) | | | |
| 51-669<br>FB01-51-669 | 2 | BOOT,MOTOR-RETRACT H/L<br>(W/O H.L.CLEANER) | | | |
| 51-931<br>FB01-51-66X | 1 | MOTOR(R)<br>(W/O H.L.CLEANER) | | | |
| 51-931Z<br>FB01-51-67X | 1 | MOTOR(L)<br>(W/O H.L.CLEANER) | | | |
| 51-932<br>FB01-51-662A | 1 | BRACKET(R)<br>(W/O H.L.CLEANER) | | | |
| 51-932Z<br>FB01-51-672A | 1 | BRACKET(L)<br>(W/O H.L.CLEANER) | | | |
| 51-933<br>FB01-51-664A | 2 | ROD,MOTOR<br>(W/O H.L.CLEANER) | | | |
| 51-934<br>FB01-51-651A | 2 | ROD'A'<br>(W/O H.L.CLEANER) | | | |
| 51-936<br>FB01-51-652A | 2 | ROD'B'<br>(W/O H.L.CLEANER) | | | |
| 52-451A<br>H001-51-513 | 2 | RUBBER,CUSHION<br>(W/O H.L.CLEANER) | | | |
| 67-056K<br>UB39-50-795 | 6 | RIVET<br>(W/O H.L.CLEANER) | | | |
| 67-254<br>FC04-51-674 | 2 | CLIP,CABLE<br>(W/O H.L.CLEANER) | | | |

(THIS ILLUSTRATION CONSISTS OF 2 PAGES)

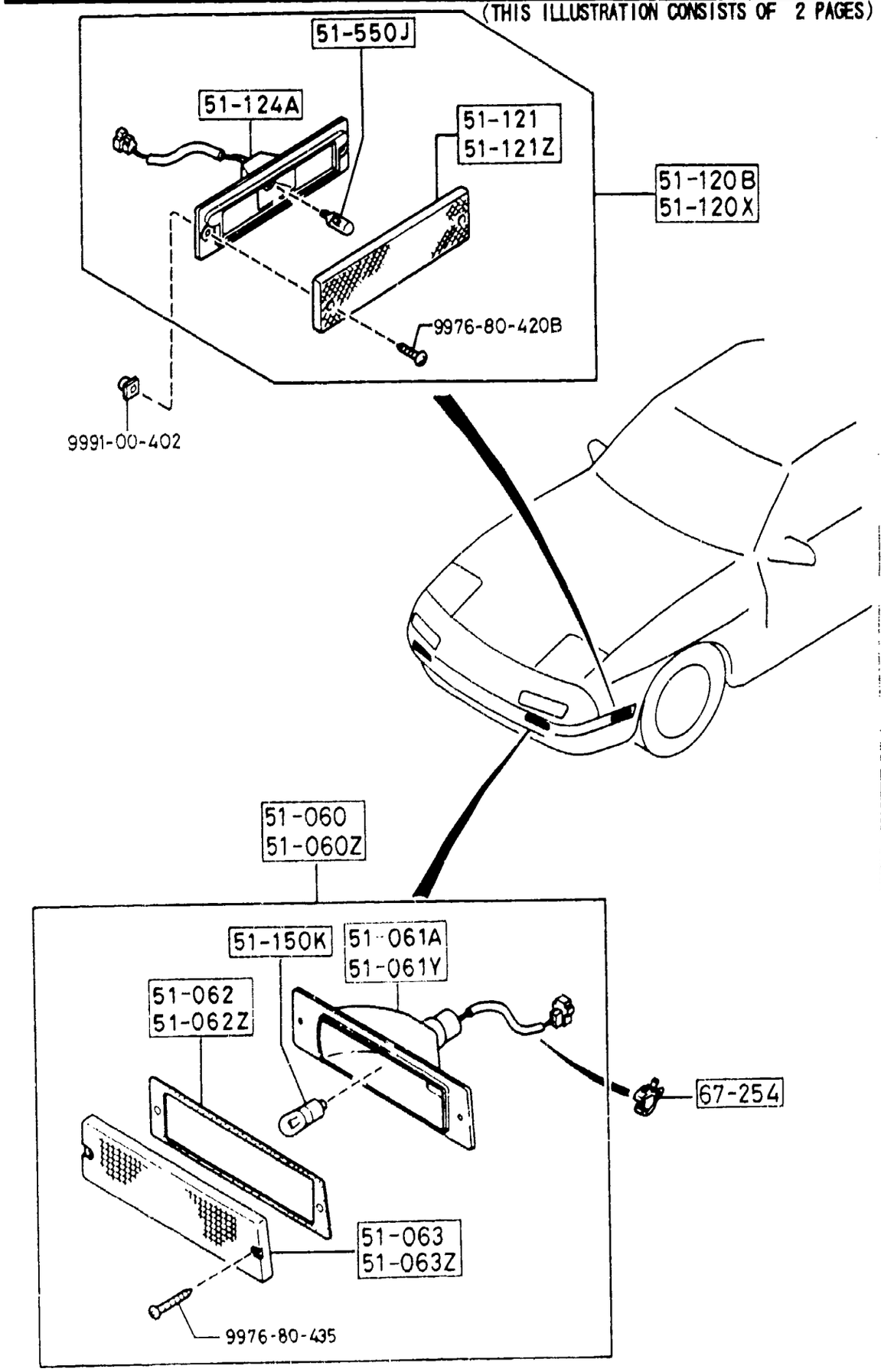






(THIS ILLUSTRATION CONSISTS OF 2 PAGES)

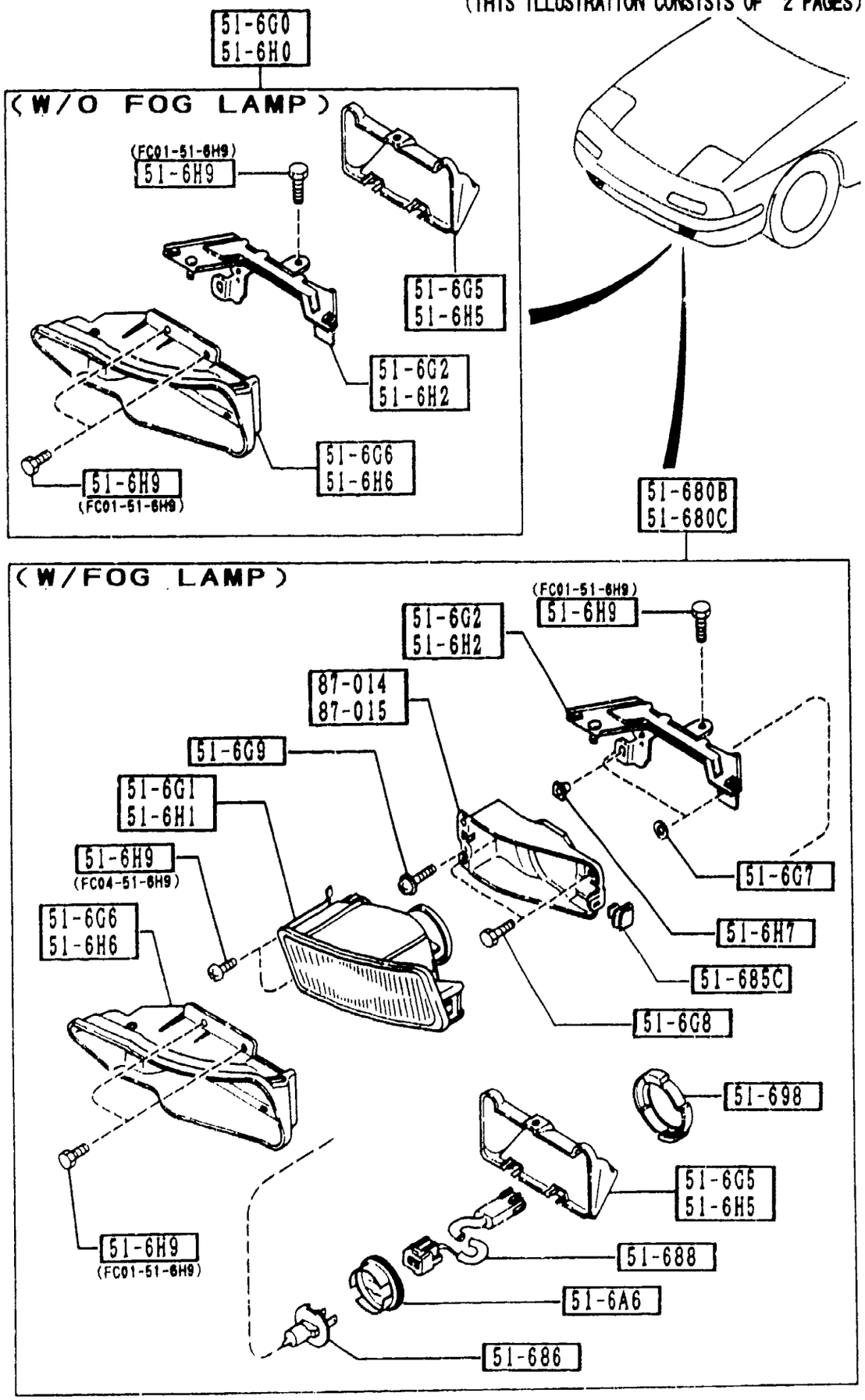

(THIS ILLUSTRATION CONSISTS OF 2 PAGES)

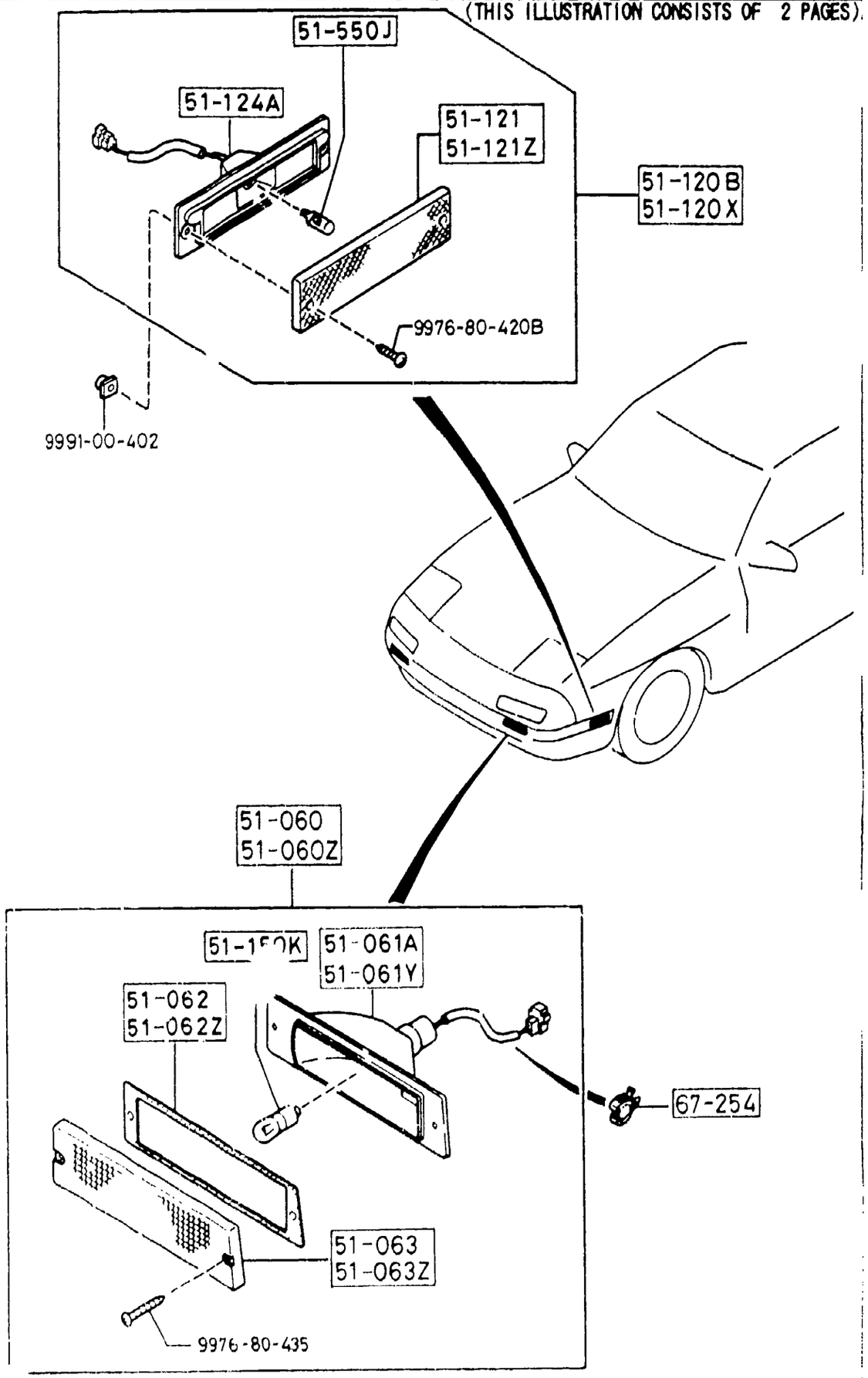


| PART NO. | QTY | MODEL/RESTRICTION | MODEL/RESTRICTION | MODEL/RESTRICTION | FROM-TO |
|---|---|---|---|---|---|
| 51-060 | | LAMP SET(R),FRT COMB | | | |
| 8BF4-51-060 | 1 | | | | |
| 51-060Z | | LAMP SET(L),FRT COMB | | | |
| 8BF4-51-070 | 1 | | | | |
| 51-061A | | HOUSING(R),F.COMB. | | | |
| FC01-51-062 | 1 | | | | |
| 51-061Y | | HOUSING(L),F.COMB. | | | |
| FC01-51-072 | 1 | | | | |
| 51-062 | | GASKET(R),F.COMB. | | | |
| FC01-51-066 | 1 | | | | |
| 51-062Z | | GASKET(L),F.COMB. | | | |
| FC01-51-076 | 1 | | | | |
| 51-063 | | LENS(R),FRT COMB. | | | |
| FC01-51-061 | 1 | | | | |
| 51-063Z | | LENS(L),FRT COMB. | | | |
| FC01-51-071 | 1 | | | | |
| 51-120B | | LAMP SET(R),SIDE TURN | | | |
| 8BF5-51-120 | 1 | | | | |
| 51-120X | | LAMP SET(L),SIDE TURN | | | |
| 8BF5-51-130 | 1 | | | | |
| 51-121 | | LENS & BODY(R) | | | |
| FC01-51-5E1 | 1 | | | | |
| 51-121Z | | LENS & BODY(L) | | | |
| FC01-51-5F1 | 1 | | | | |
| 51-124A | | SOCKET,SIDE TURN | | | |
| FC01-51-5E2 | 2 | | | | |
| 51-150K | | BULB | | | |
| 99701-4278Y | | A12V 27/8W | | | |

(THIS ILLUSTRATION CONSISTS OF 2 PAGES)

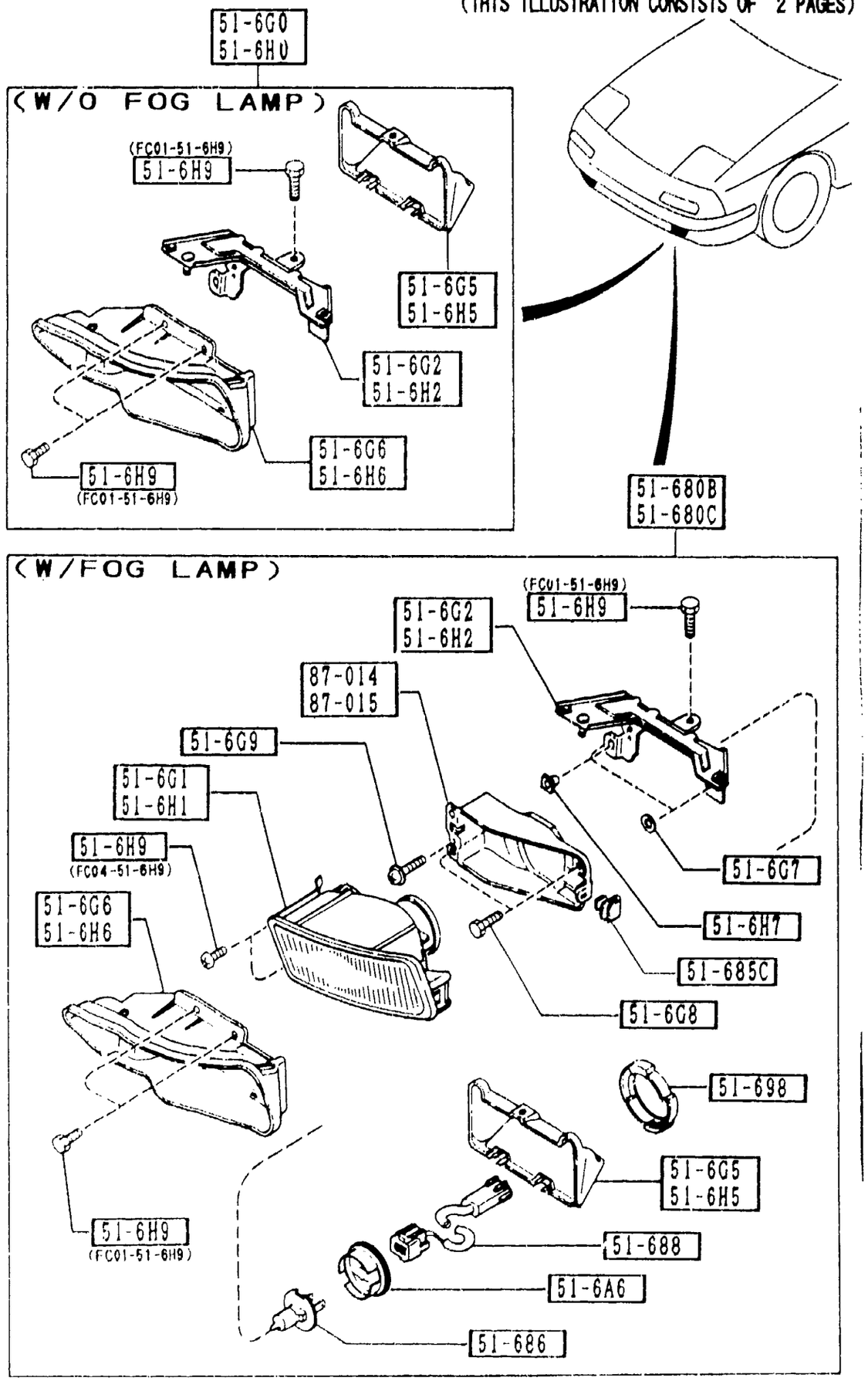




| PART NO. | QTY | MODEL/RESTRICTION | MODEL/RESTRICTION | MODEL/RESTRICTION | FROM-TO |
|---|---|---|---|---|---|
| CONT'D | | | | | |
| | 2 | | | | |
| 51-550J | | BULB | | | |
| 99701-6040 | 2 | 12V 3.8W | | | |
| 51-6A6 | | COVER,SOCKET-F.FOG LAMP | | | |
| FC04-51-6G4 | 2 | (W/FOG LAMP) | | | |
| 51-6G0 | | DUCT(R),AIR | | | |
| FC01-51-6G0A | 1 | (W/O FOG LAMP) | | | |
| 51-6G1 | | UNIT(R),FOG LAMP | | | |
| FC04-51-6G1 | 1 | (W/FOG LAMP) | | | |
| 51-6G2 | | HOUSING(R),FOG LAMP | | | |
| FC01-51-6G2 | 1 | (W/O FOG LAMP) | | | |
| FC04-51-6G2 | 1 | (W/FOG LAMP) | | | |
| 51-6G5 | | DUCT(R),'B' AIR | | | |
| FC04-51-6G5 | 1 | | | | |
| 51-6G6 | | DUCT(R),'A' AIR | | | |
| FC04-51-6G6A | 1 | | | | |
| 51-6G7 | | RUBBER,MOUNT | | | |
| FC04-51-6G7 | 4 | (W/FOG LAMP) | | | |
| 51-6G8 | | BOLT,SPECIAL | | | |
| FC04-51-6G8 | 4 | (W/FOG LAMP) | | | |
| 51-6G9 | | SCREW,ADJUST | | | |
| FC04-51-6G9 | 2 | (W/FOG LAMP) | | | |
| 51-6H0 | | DUCT(L),AIR | | | |
| FC01-51-6H0A | 1 | (W/O FOG LAMP) | | | |
| 51-6H1 | | UNIT(L),FOG LAMP | | | |
| FC04-51-6H1 | 1 | (W/FOG LAMP) | | | |
| 51-6H2 | | HOUSING(L),FOG LAMP | | | |

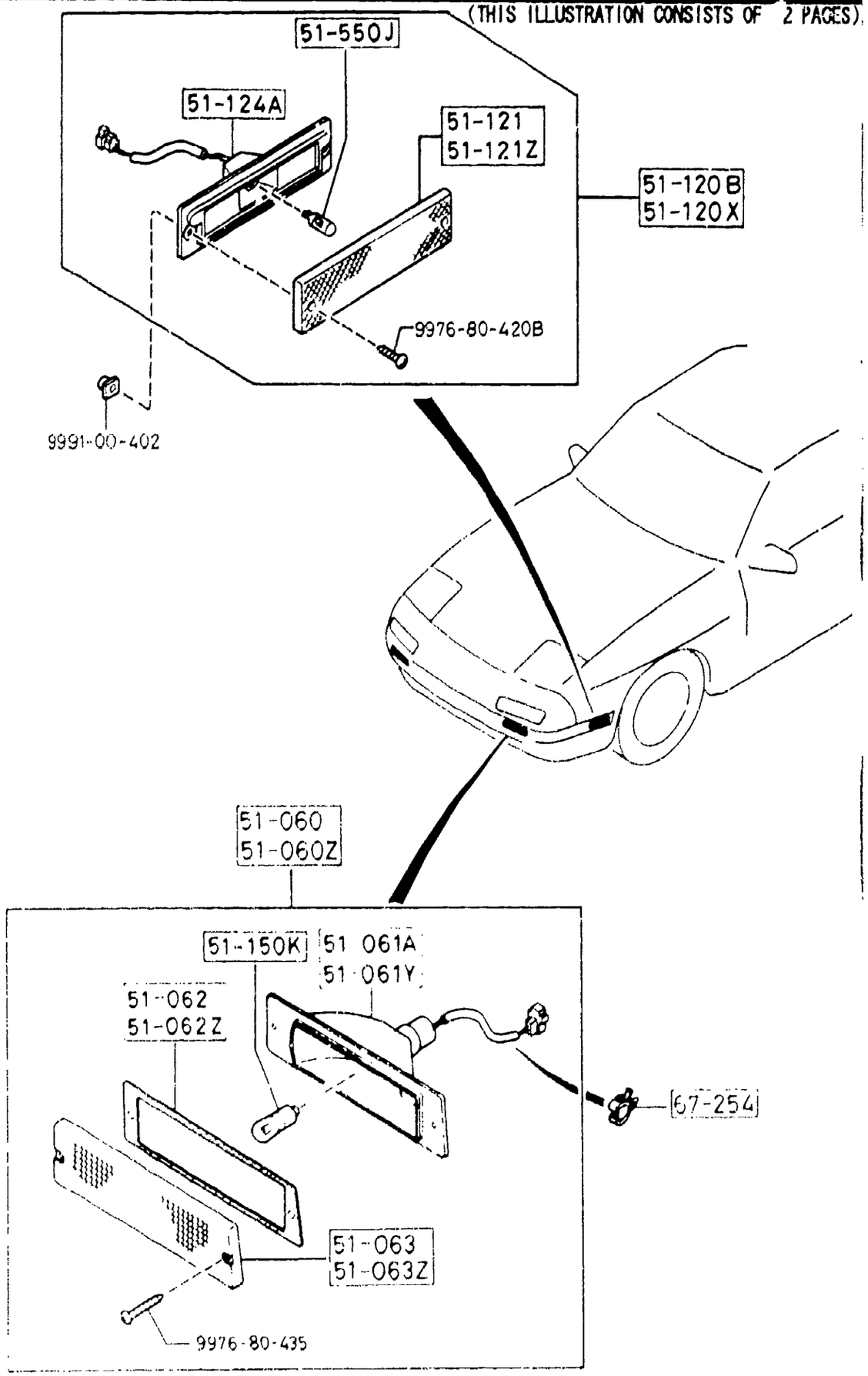




| PART NO. | QTY | MODEL/RESTRICTION | MODEL/RESTRICTION | MODEL/RESTRICTION | FROM-TO |
|---|---|---|---|---|---|
| CONT'D | | | | | |
| FC01-51-6H2 | 1 | (W/O FOG LAMP) | | | |
| FC04-51-6H2 | 1 | (W/FOG LAMP) | | | |
| 51-6H5 | | DUCT(L),AIR | | | |
| FC04-51-6H5 | 1 | | | | |
| 51-6H6 | | DUCT(L),'A' AIR | | | |
| FC04-51-6H6A | 1 | | | | |
| 51-6H7 | | SCREW,GROMMET | | | |
| FC04-51-6H7 | 2 | (W/FOG LAMP) | | | |
| 51-6H9 | | SCREW SET | | | |
| FC01-51-6H9 | 6 | | | | |
| FC04-51-6H9 | 4 | (W/FOG LAMP) | | | |
| 51-680B | | LAMP(R),F.FOG | | | |
| FC04-51-680A | 1 | (W/FOG LAMP) | | | |
| 51-680C | | LAMP(L),F.FOG | | | |
| FC04-51-690A | 1 | (W/FOG LAMP) | | | |
| 51-685C | | CLIP | | | |
| FC04-51-685 | 2 | (W/FOG LAMP) | | | |
| 51-686 | | BULB,FRONT FOG LAMP | | | |
| FC04-51-675 | 2 | (W/FOG LAMP) | | | |
| 51-688 | | CORD,FRONT FOG LAMP | | | |
| FC04-51-688A | 2 | (W/FOG LAMP) | | | |
| 51-698 | | CAP,LOCKING | | | |
| FC04-51-698 | 2 | (W/FOG LAMP) | | | |
| 67-254 | | CLIP,CABLE | | | |
| FC04-51-674 | 2 | | | | |
| 87-014 | | RING(R)MOUNTING | | | |
| FC04-51-6G3 | 1 | (W/FOG LAMP) | | | |

5105 FRONT COMBINATION LAMPS (2/2)

(THIS ILLUSTRATION CONSISTS OF 2 PAGES)

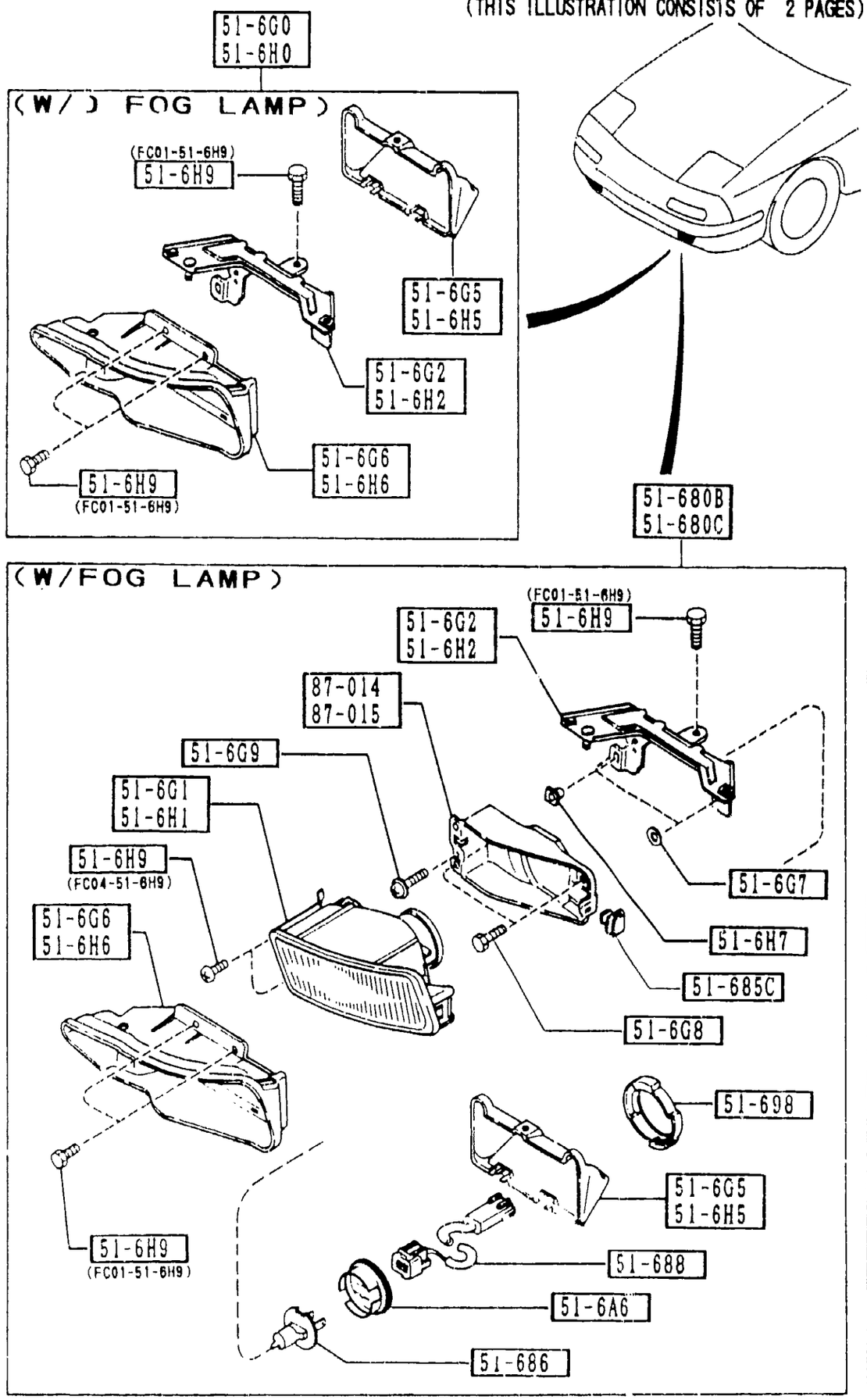


| PART NO. | QTY | MODEL/RESTRICTION | MODEL/RESTRICTION | MODEL/RESTRICTION | FROM-TO |
|---|---|---|---|---|---|
| 87-015 | | RING(L)MOUNTING | | | |
| FC04-51-6H3 | 1 | (W/FOG LAMP) | | | |

(CPE)

(THIS ILLUSTRATION CONSISTS OF 2 PAGES)

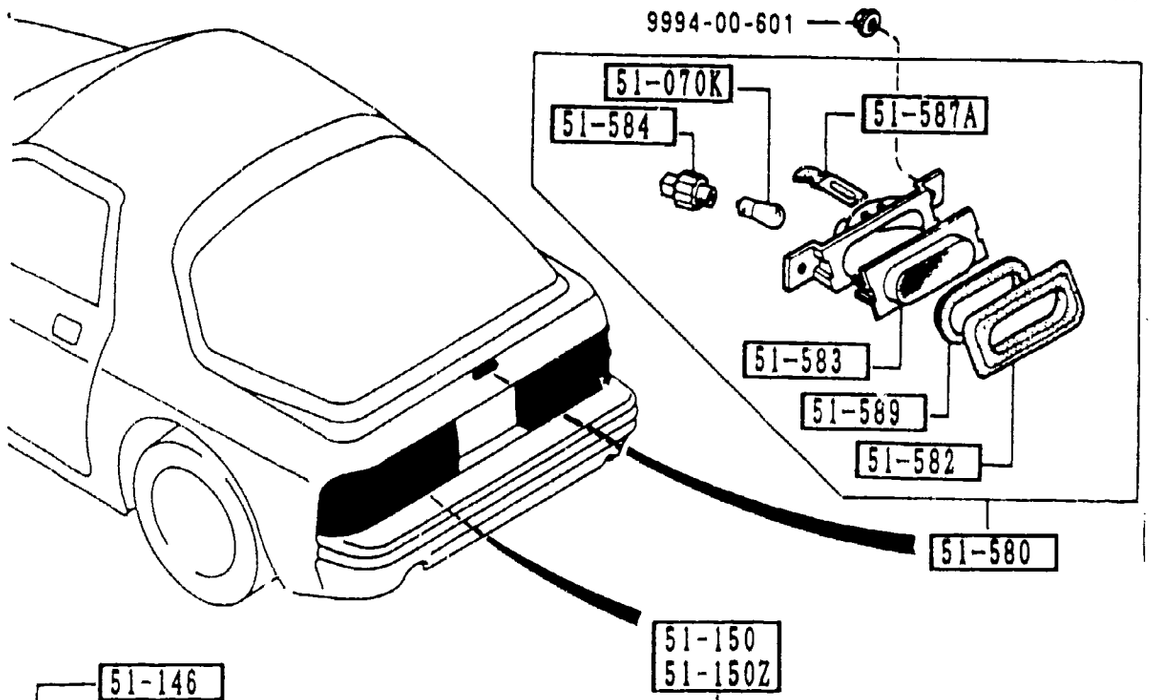


AUFA03

(CONT'D)



(CONVERTIBLE)

(THIS ILLUSTRATION CONSISTS OF 2 PAGES)

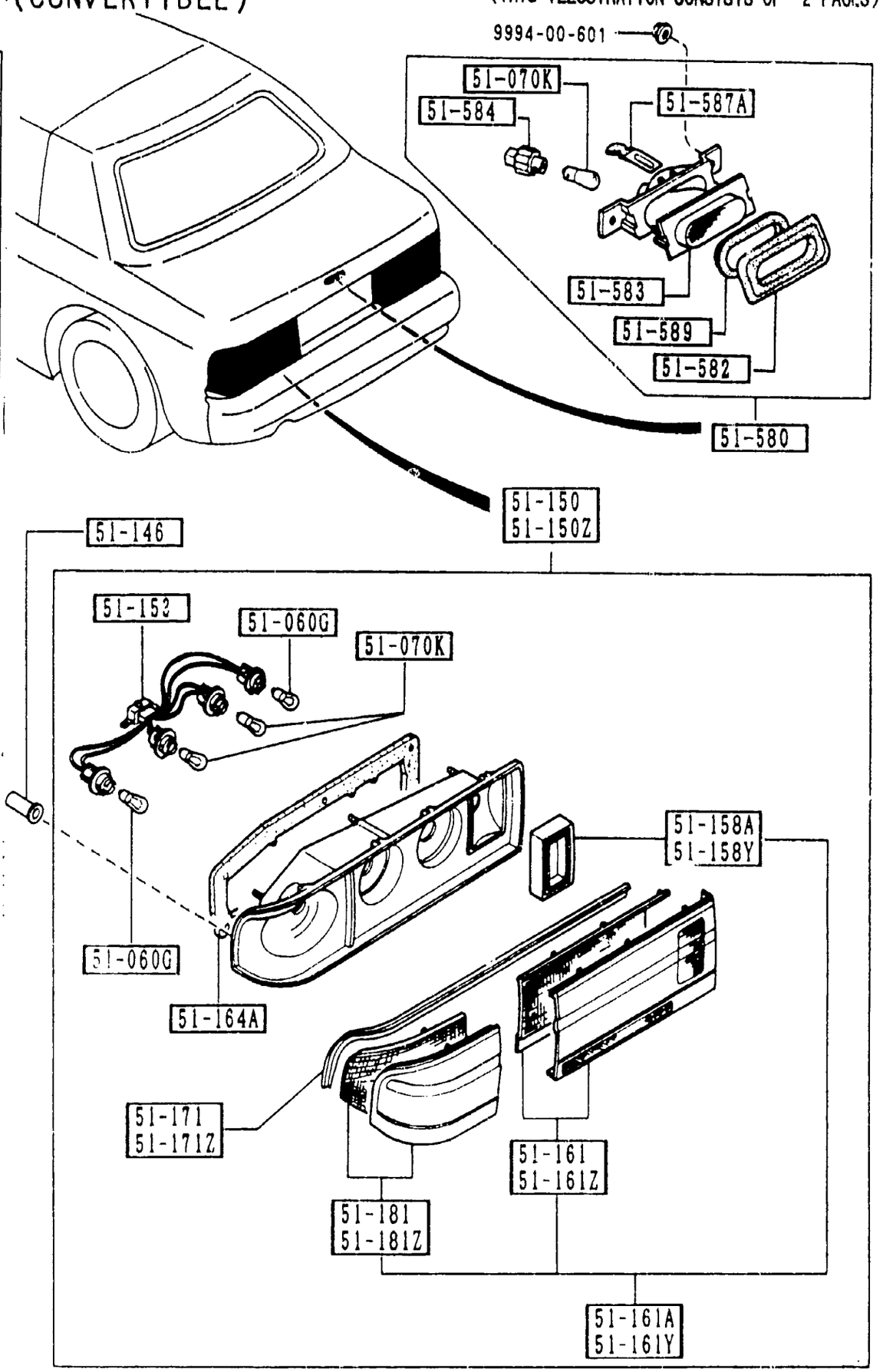


AUFA03

5110 REAR COMBINATION LAMPS (1/2)

(CPE) (THIS ILLUSTRATION CONSISTS OF 2 PAGES)

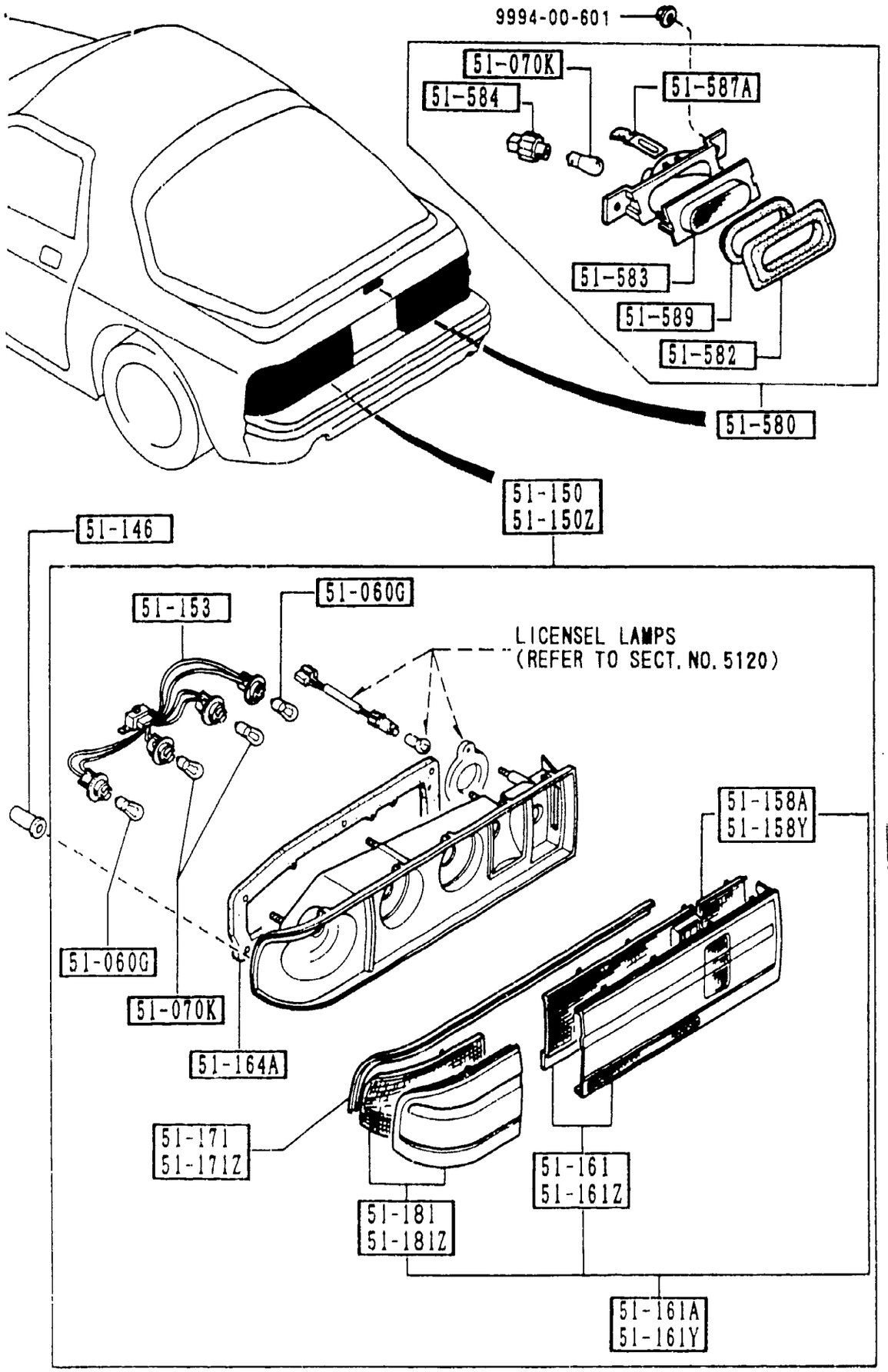


| PART NO. | QTY | MODEL/RESTRICTION | MODEL/RESTRICTION | MODEL/RESTRICTION | FROM-TO |
|---|---|---|---|---|---|
| 51-060G | | BULB | | | |
| 99701-4278 | 4 | 12V 27W/8W | | | |
| 51-070K | | BULB | | | |
| 99701-3270 | 5 | 12V 27W | | | |
| 51-146 | | GROMMET,SCREW-R.COMB | | | |
| FB01-51-141 | 2 | (CPE) | | | |
| FB67-51-141 | 2 | (CONVERTIBLE) | | | |
| 51-150 | | LAMP SET(R),RR.COMB. | | | |
| 8BFA-51-150 | 1 | (CPE) | | | |
| 8BFB-51-150 | 1 | (CONVERTIBLE) | | | |
| 51-150Z | | LAMP SET(L),RR.COMB. | | | |
| 8BFA-51-160 | 1 | (CPE) | | | |
| 8BFB-51-160 | 1 | (CONVERTIBLE) | | | |
| 51-153 | | SOCKET,RR.COMB. | | | |
| FC01-51-155 | 2 | | | | |
| 51-158A | | SHADE(R),REAR COMB. LAMP | | | |
| FC01-51-1G1 | 1 | (CPE) | | | |
| FC33-51-1G1 | 1 | (CONVERTIBLE) | | | |
| 51-158Y | | SHADE(L),REAR COMB. LAMP | | | |
| FC01-51-1H1 | 1 | (CPE) | | | |
| FC33-51-1H1 | 1 | (CONVERTIBLE) | | | |
| 51-161 | | LENS(R),RR.COMB. | | | |
| FC01-51-151A | 1 | (CPE) | | | |
| FC33-51-151A | 1 | (CONVERTIBLE) | | | |
| 51-161A | | LENS & BODY(R),RR COMB. | | | |
| FC01-51-170A | 1 | (CPE) | | | |
| FC33-51-170A | 1 | (CONVERTIBLE) | | | |
| 51-161Y | | LENS & BODY(L),RR COMB. | | | |

(CONVERTIBLE) (THIS ILLUSTRATION CONSISTS OF 2 PAGES)

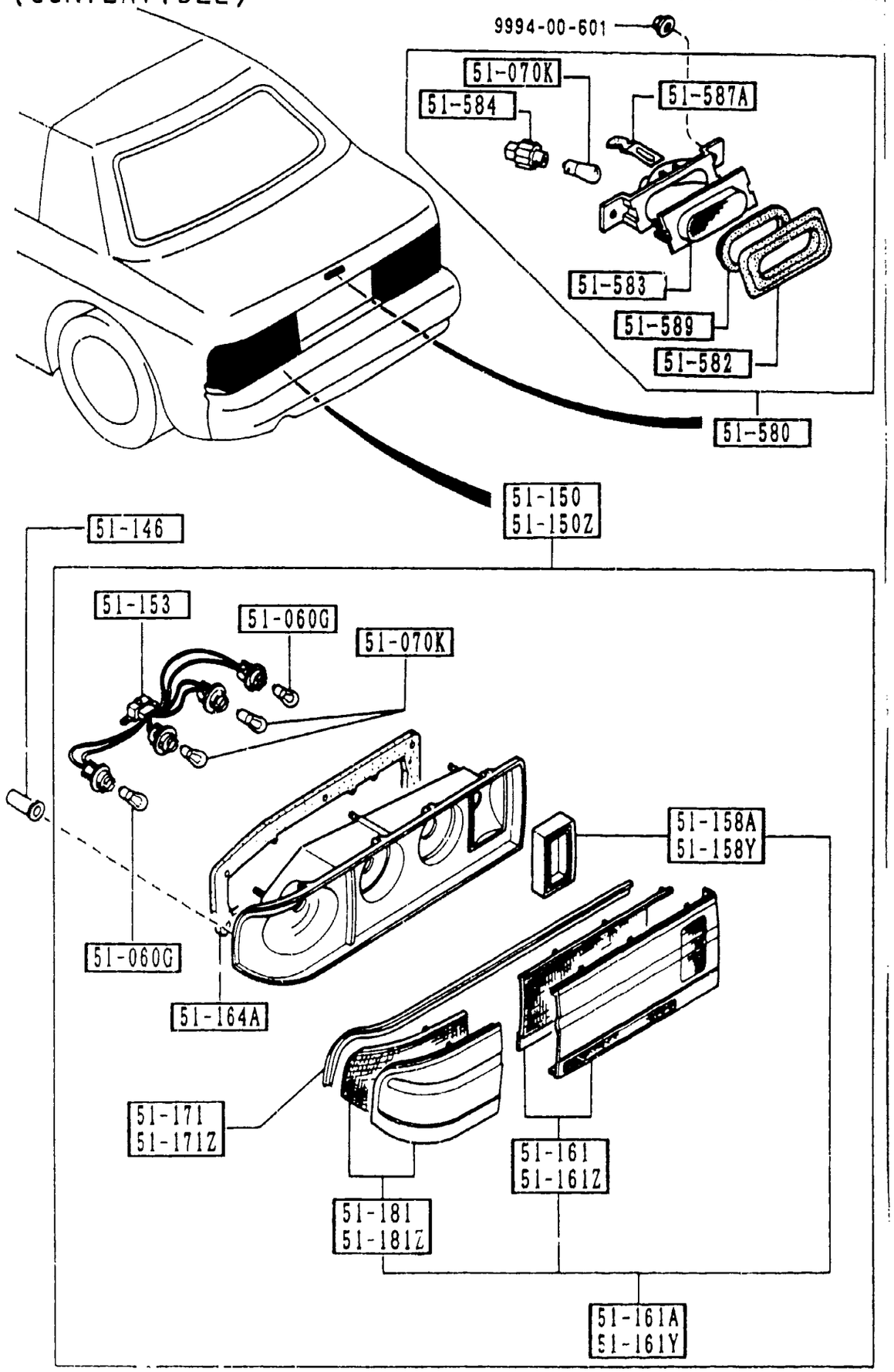




| PART NO. | QTY | MODEL/RESTRICTION | MODEL/RESTRICTION | MODEL/RESTRICTION | FROM-TO |
|---|---|---|---|---|---|
| CONT'D | | | | | |
| FC01-51-180A | 1 | (CPE) | | | |
| FC33-51-180A | 1 | (CONVERTIBLE) | | | |
| 51-161Z | | LENS(L),RR.COMB. | | | |
| FC01-51-161A | 1 | (CPE) | | | |
| FC33-51-161A | 1 | (CONVERTIBLE) | | | |
| 51-164A | | GASKET,RR.COMB. | | | |
| FB01-51-156 | 2 | | | | |
| 51-171 | | PROTECTOR(R),RR.COMB | | | |
| FC01-51-159A | 1 | (CPE) | | | |
| FC33-51-159A | 1 | (CONVERTIBLE) | | | |
| 51-171Z | | PROTECTOR(L),RR.COMB | | | |
| FC01-51-169A | 1 | (CPE) | | | |
| FC33-51-169A | 1 | (CONVERTIBLE) | | | |
| 51-181 | | LENS NO.2(R),RR.COMB | | | |
| FC01-51-152A | 1 | | | | |
| 51-181Z | | LENS NO.2(L),RR.COMB | | | |
| FC01-51-162A | 1 | | | | |
| 51-580 | | LAMP,STOP-HI.MOUNT. | | | |
| FB01-51-580B | 1 | | | | |
| 51-582 | | GASKET,STOP LAMP-HI. MOUNT | | | |
| FB01-51-582A | 1 | | | | |
| 51-583 | | LENS,STOP LAMP-HI.MO UNT | | | |
| FB01-51-583A | 1 | | | | |
| 51-584 | | SOCKET,STOP LAMP-HI. MOUNT | | | |
| FB01-51-584A | 1 | | | | |
| 51-587A | | CLIP,STOP LAMP-HI. M OUNT | | | |
| FB01-51-587 | 1 | | | | |
| 51-589 | | PROTECTOR,STOP LAMP- HI.MO | | | |

(CPE) (THIS ILLUSTRATION CONSISTS OF 2 PAGES)

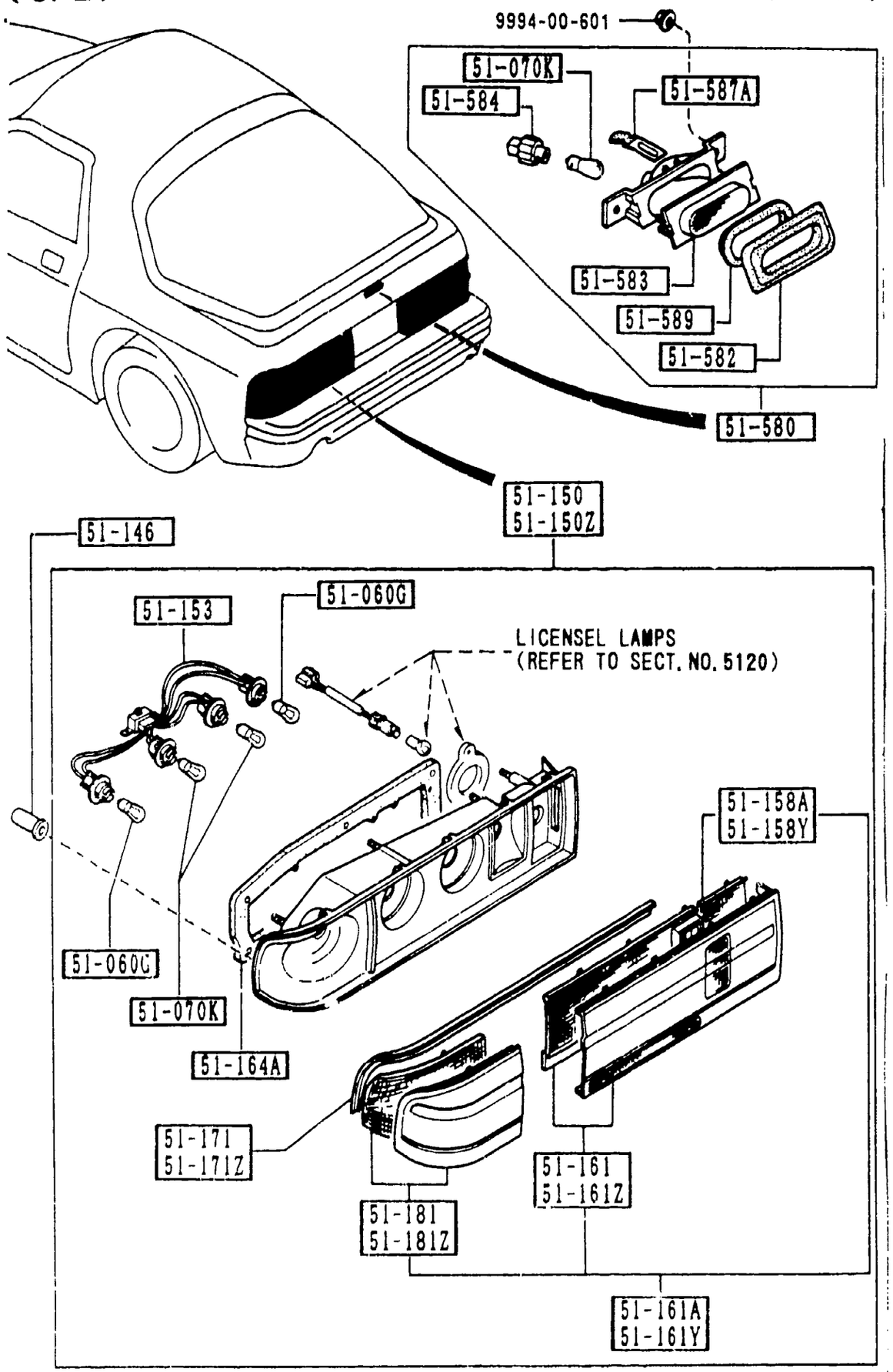




5110 -3 * REAR COMBINATION LAMPS

| PART NO. | QTY | MODEL/RESTRICTION | MODEL/RESTRICTION | MODEL/RESTRICTION | FROM-TO |
|---|---|---|---|---|---|
| CONT'D<br>FB01-51-586 | 1 | | | | |

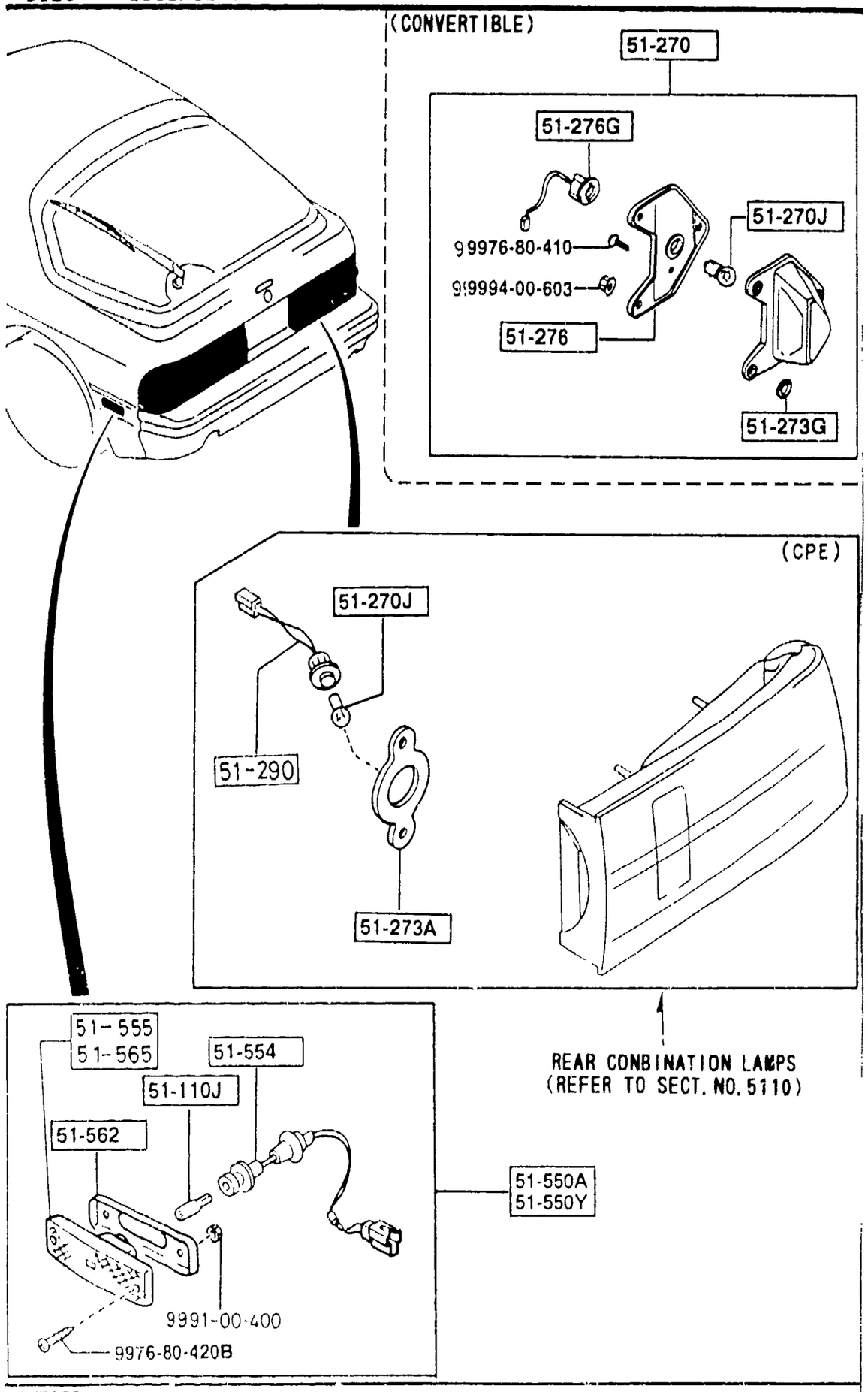


| PART NO. | QTY | MODEL/RESTRICTION | MODEL/RESTRICTION | MODEL/RESTRICTION | FROM-TO |
|---|---|---|---|---|---|
| 51-110J | | BULB | | | |
| 99701-6038 | 2 | 12V 3.8W | | | |
| 51-270 | | LAMP,LICENSE | | | |
| 8BF1-51-270 | 2 | (CONVERTIBLE) | | | |
| 51-270J | | BULB | | | |
| 99701-2070 | 2 | 12V 7.5W | | | |
| 51-273A | | GASKET,LICENSE | | | |
| FB01-51-157 | 2 | (CPE) | | | |
| 51-273G | | GASKET,LICENSE LAMP | | | |
| FB67-51-273 | 2 | (CONVERTIBLE) | | | |
| 51-276 | | SHADE,LAMP-LICENSE | | | |
| FB67-51-276 | 2 | (CONVERTIBLE) | | | |
| 51-276G | | SOCKET,LICENSE LAMP | | | |
| FB67-51-272 | 2 | (CONVERTIBLE) | | | |
| 51-290 | | CORD,LICENSE LAMP | | | |
| FB01-51-172 | 2 | (CPE) | | | |
| 51-550A | | LAMP(R),SIDE TURN-RR | | | |
| 8BF1-51-550 | 1 | | | | |
| 51-550Y | | LAMP(L),SIDE TURN-RR | | | |
| 8BF1-51-560 | 1 | | | | |
| 51-554 | | SOCKET,RR SIDE TURN LAMP | | | |
| FB01-51-554 | 2 | | | | |
| 51-555 | | UNIT(R),SIDE TURN-RR | | | |
| FB01-51-555 | 1 | | | | |
| 51-562 | | GASKET,RR.SIDE TURN | | | |
| FB01-51-552A | 2 | | | | |

## 5120 LICENSE LAMPS

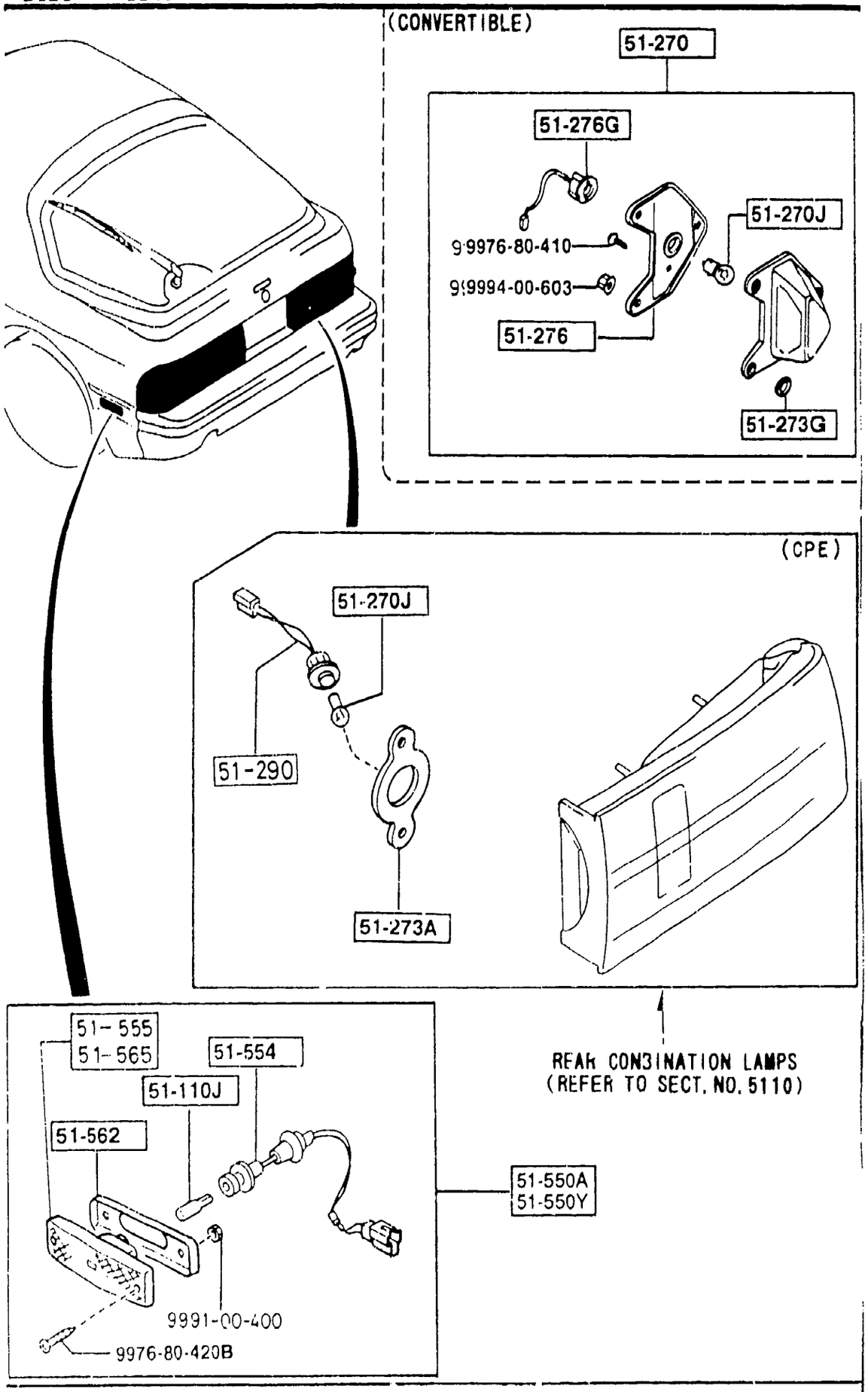


| PART NO. | QTY | MODEL/RESTRICTION | MODEL/RESTRICTION | MODEL/RESTRICTION | FROM-TO |
|---|---|---|---|---|---|
| 51-565 | | UNIT(L),SIDE TURN-RR | | | |
| FB01-51-565 | 1 | | | | |

(CPE)

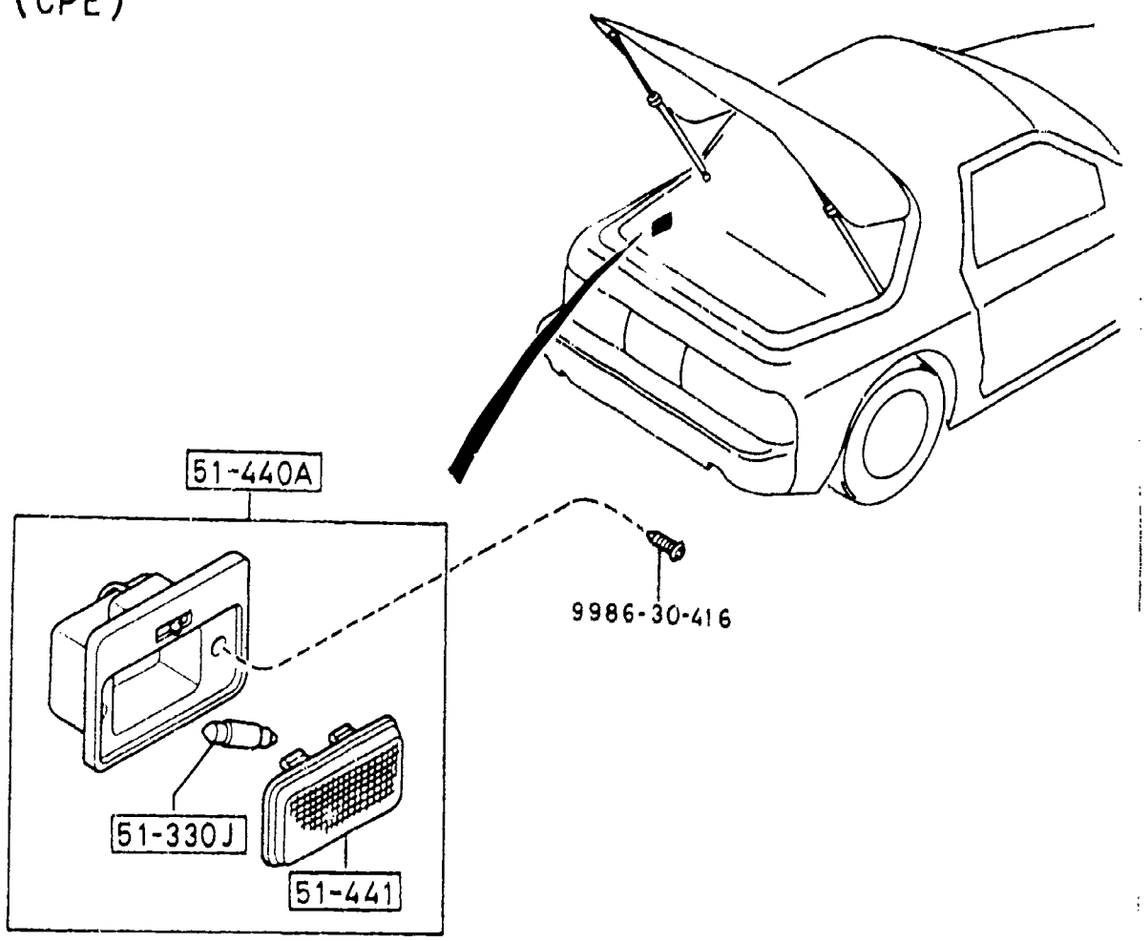


(CONVERTIBLE)

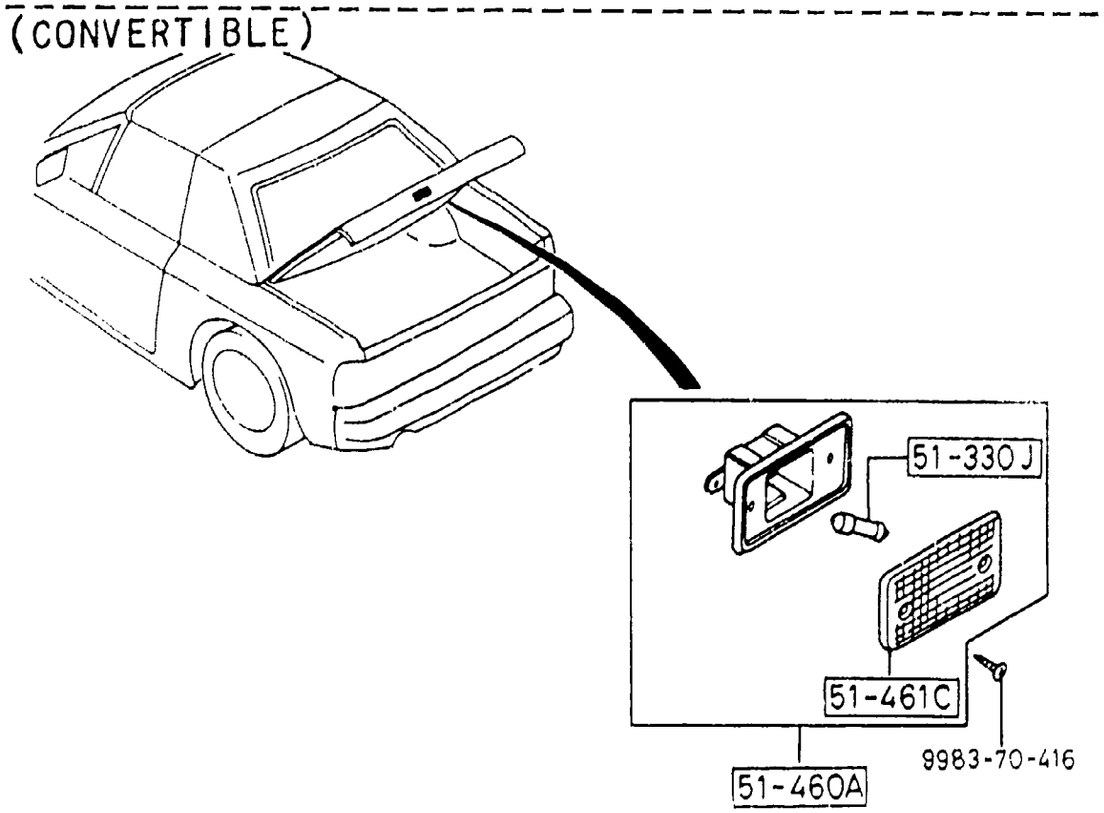


| PART NO. | QTY | MODEL/RESTRICTION | MODEL/RESTRICTION | MODEL/RESTRICTION | FROM-TO |
|---|---|---|---|---|---|
| 51-330J | | BULB | | | |
| 99701-5050 | 1 | 12V 5W | | | |
| 51-440A | | LAMP,CARGO ROOM | | | |
| FC01-51-440 | 1 | (CPE) | | | |
| 02 | INT- | FD8 FD9 BLACK | | | |
| 51-441 | | LENS | | | |
| FC01-51-441 | 1 | (CPE) | | | |
| 51-460A | | LAMP,COURTESY | | | |
| 8545-51-460 | 1 | (CONVERTIBLE) | | | |
| 51-461C | | LENS,COURTESY | | | |
| 8545-51-461 | 1 | (CONVERTIBLE) | | | |

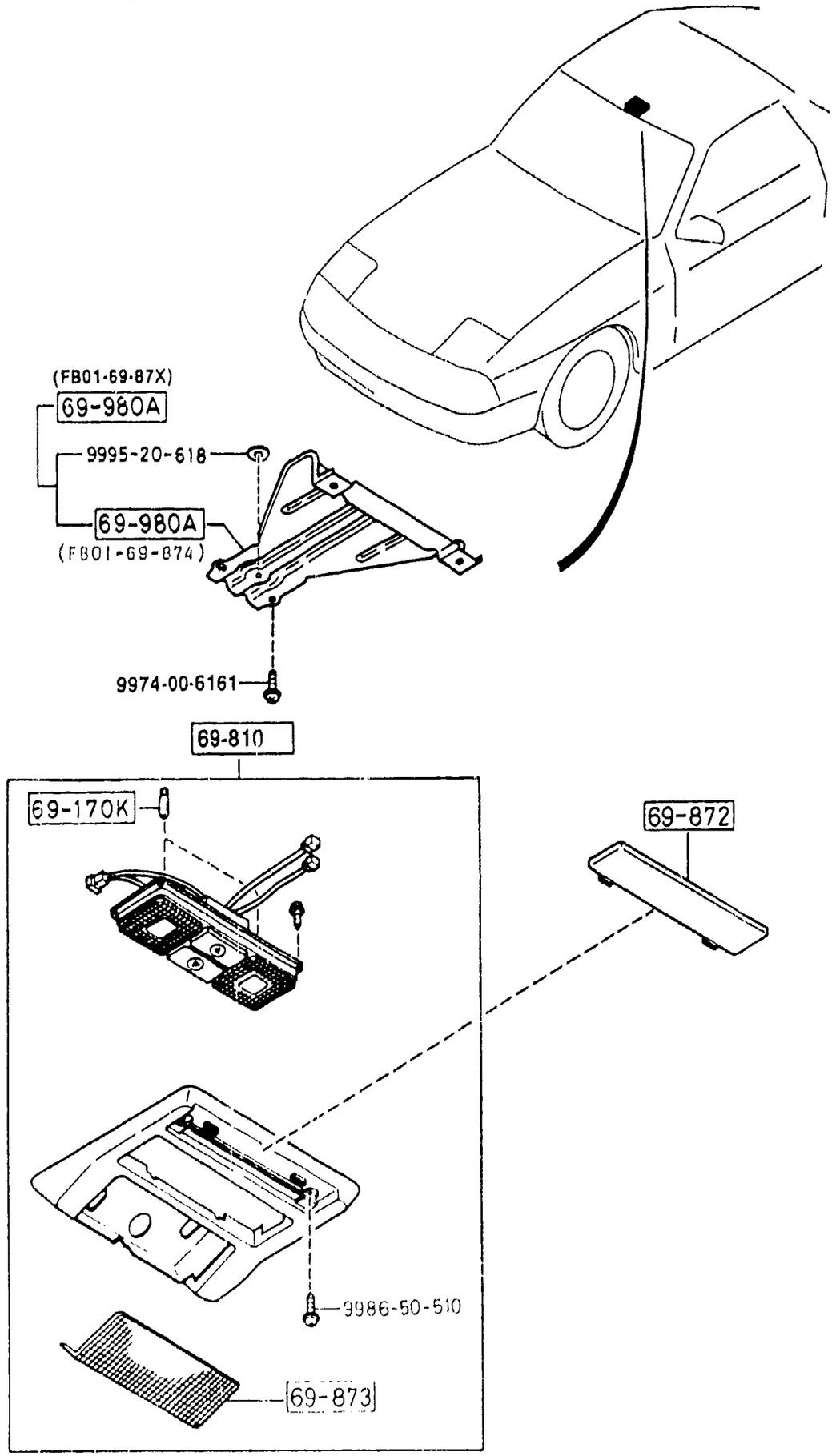


| PART NO. | QTY | MODEL/RESTRICTION | MODEL/RESTRICTION | MODEL/RESTRICTION | FROM-TO |
|---|---|---|---|---|---|
| 69-170K | | BUI.B,INTERIOR MIRROR | | | |
| 99701-6050 | 2 | 12V 5W | | | |
| 69-810 | | CONSOLE,OVERHEAD | | | |
| FB02-69-870A | 1 | (W/O SUN-RF) | | | |
| 02 | INT- | FD8 BLACK | | | |
| 48 | INT- | FD9 BLUE | | | |
| FB03-69-870A | 1 | (SUNROOF) | | | |
| 02 | INT- | FD8 BLACK | | | |
| 48 | INT- | FD9 BLUE | | | |
| 69-872 | | COVER,OVER HEAD CONSOLE | | | |
| FB01-69-872 | 1 | | | | |
| 02 | INT- | FD8 BLACK | | | |
| 48 | INT- | FD9 BLUE | | | |
| 69-873 | | LENS,ROOM LAMP-HEAD CONS. | | | |
| FB01-69-873 | 1 | | | | |
| 69-980A | | BRACKET,OVERHEAD CONSOLE | | | |
| FB01-69-87X | 1 | (W/O SUN-RF) | | | |
| FB01-69-874 | 1 | (W/O SUN-RF) | | | |

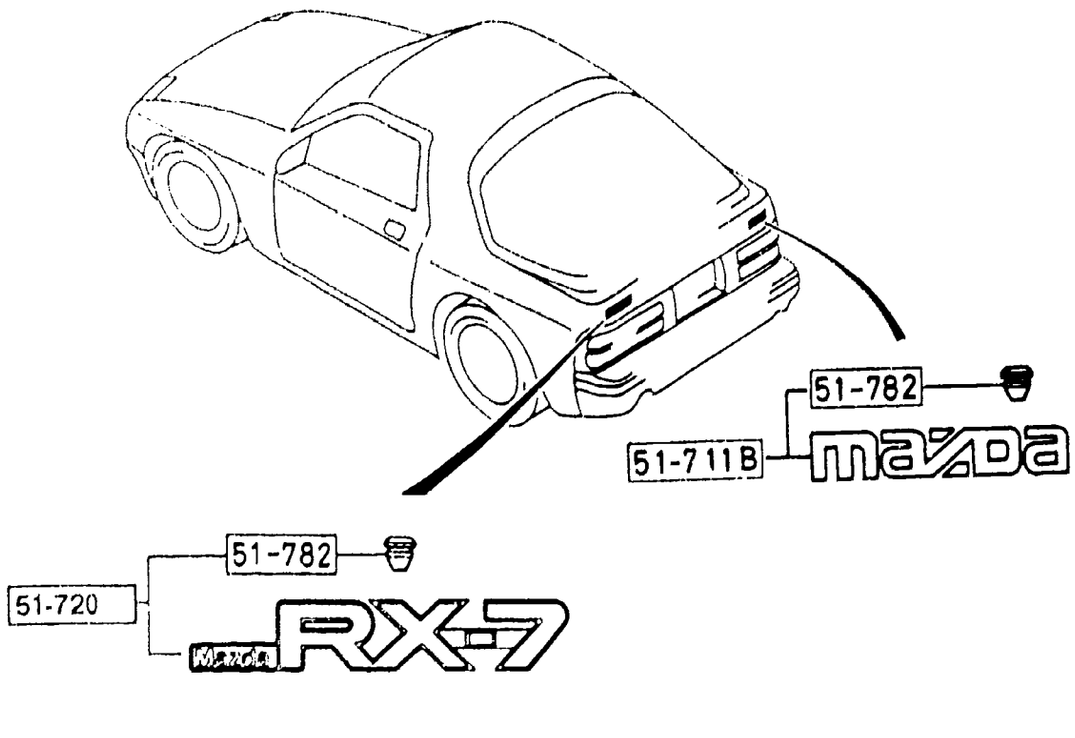


| PART NO. | QTY | MODEL/RESTRICTION | MODEL/RESTRICTION | MODEL/RESTRICTION | FROM-TO |
|---|---|---|---|---|---|
| 51-711B<br>FB02-51-740 | 1 | ORNAMENT,MAKER NAME-REAR<br>MAZDA | | | |
| 51-720<br>FB02-51-720 | 1 | ORNAMENT,CAR NAME-REAR<br>MAZDA RX-7 | | | |
| 51-782<br>H001-51-782 | 7 | CLIP,TUBULAR | | | |

(CPE)

(THIS ILLUSTRATION CONSISTS OF 2 PAGES)

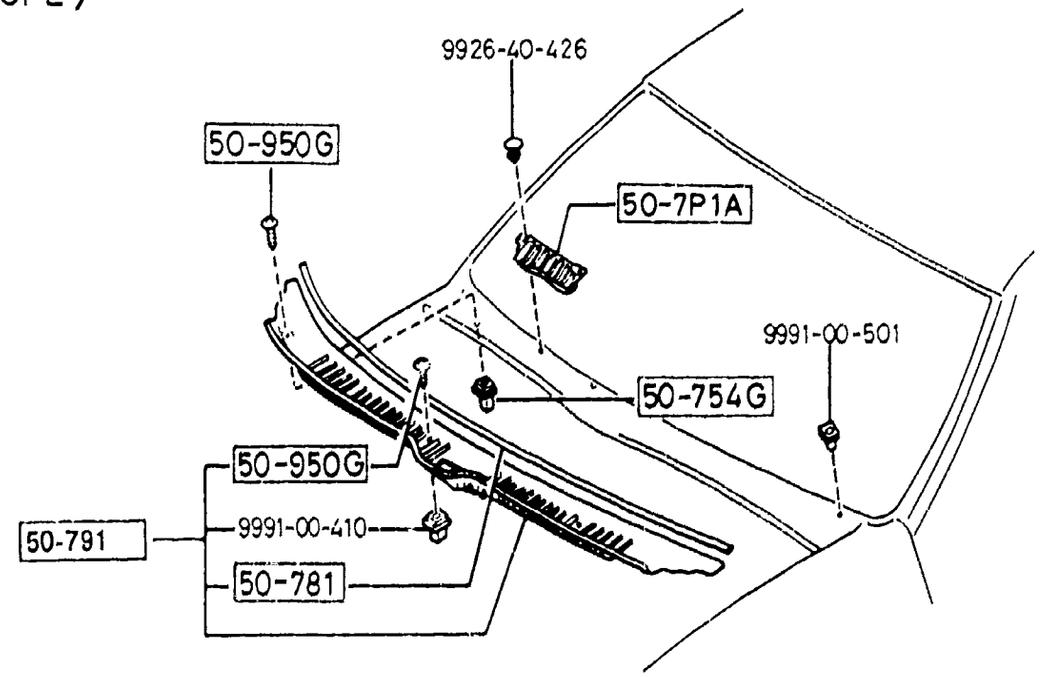


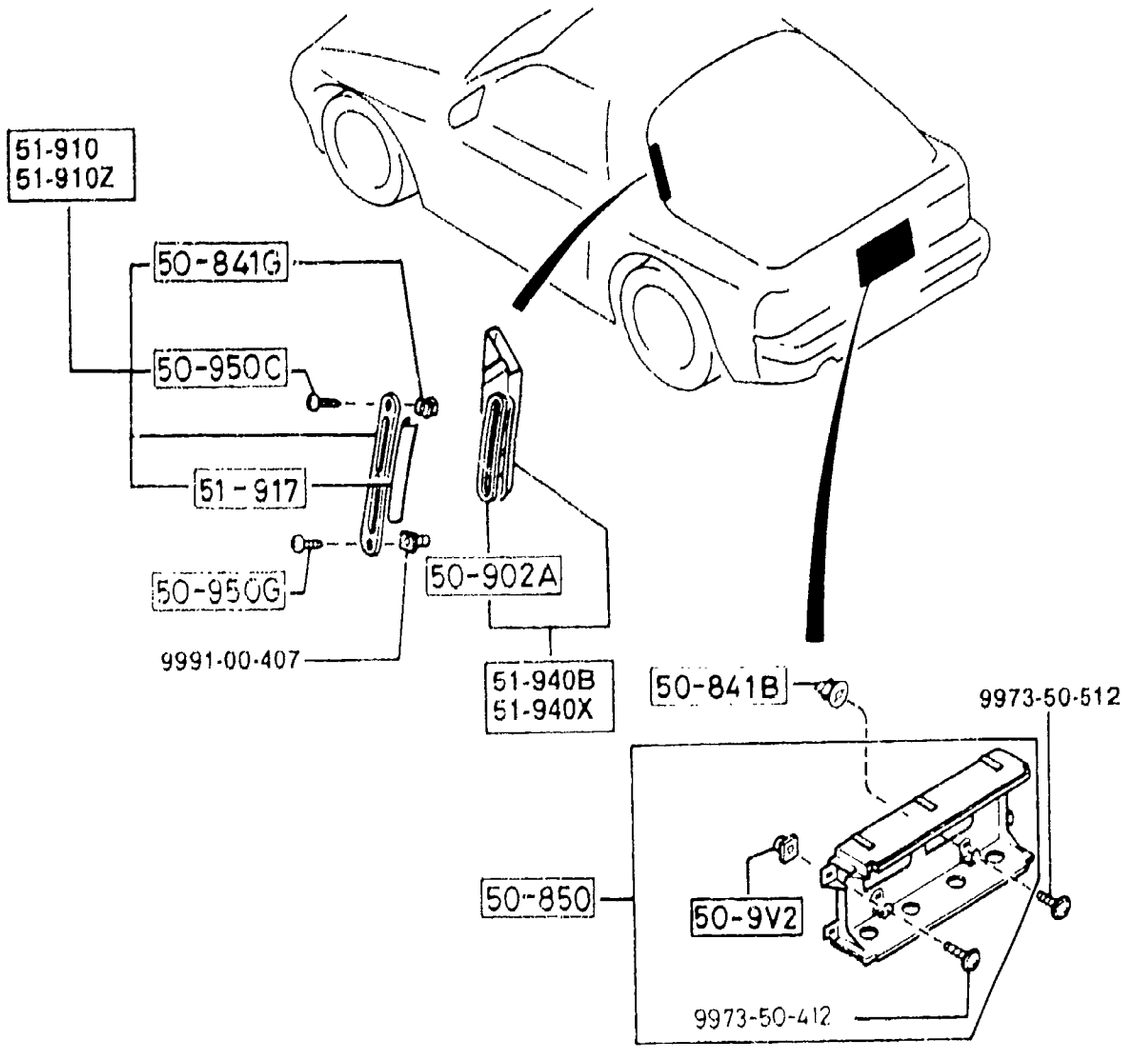


AUFA03



(CONVERTIBLE)

(THIS ILLUSTRATION CONSISTS OF 2 PAGES)

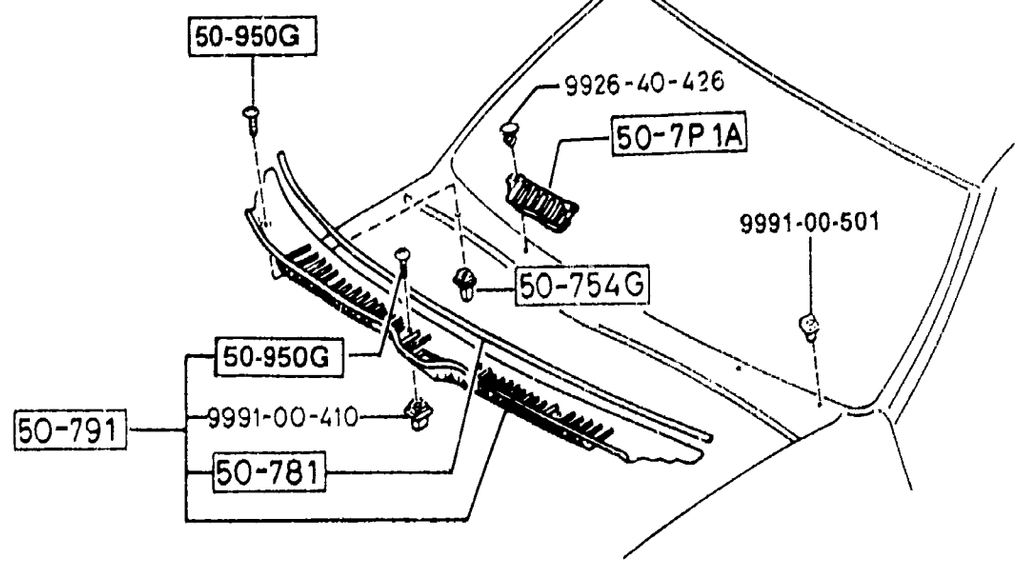


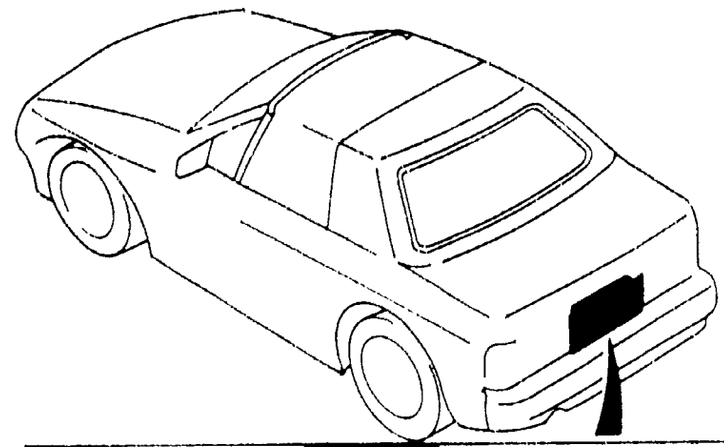

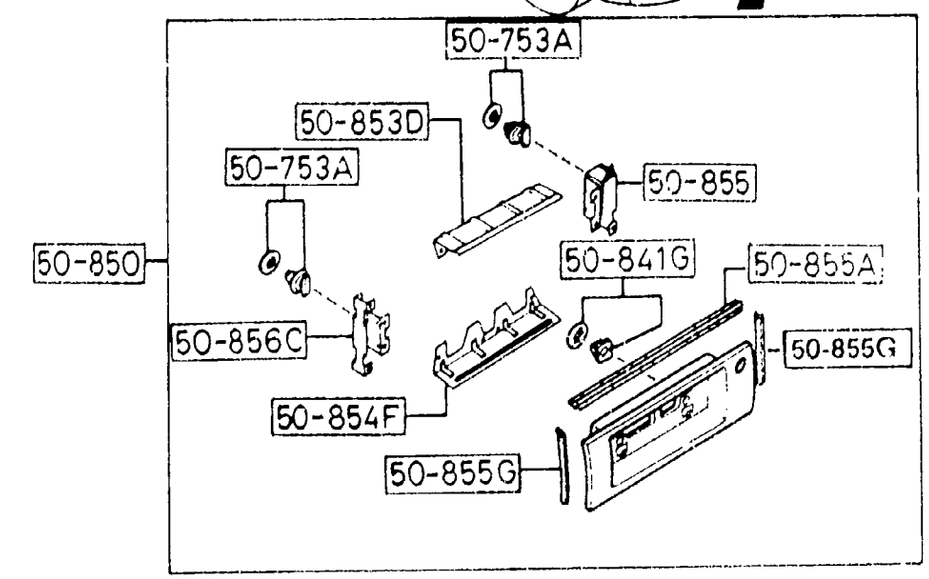


(CONT'D) AUFA03

(CPE) (THIS ILLUSTRATION CONSISTS OF 2 PAGES)

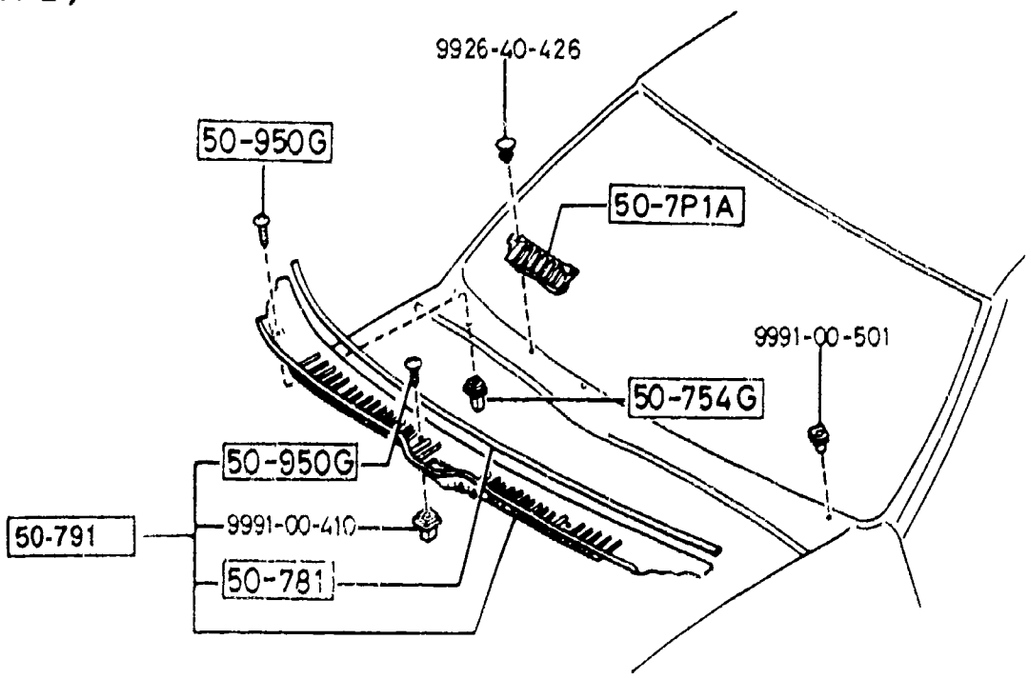


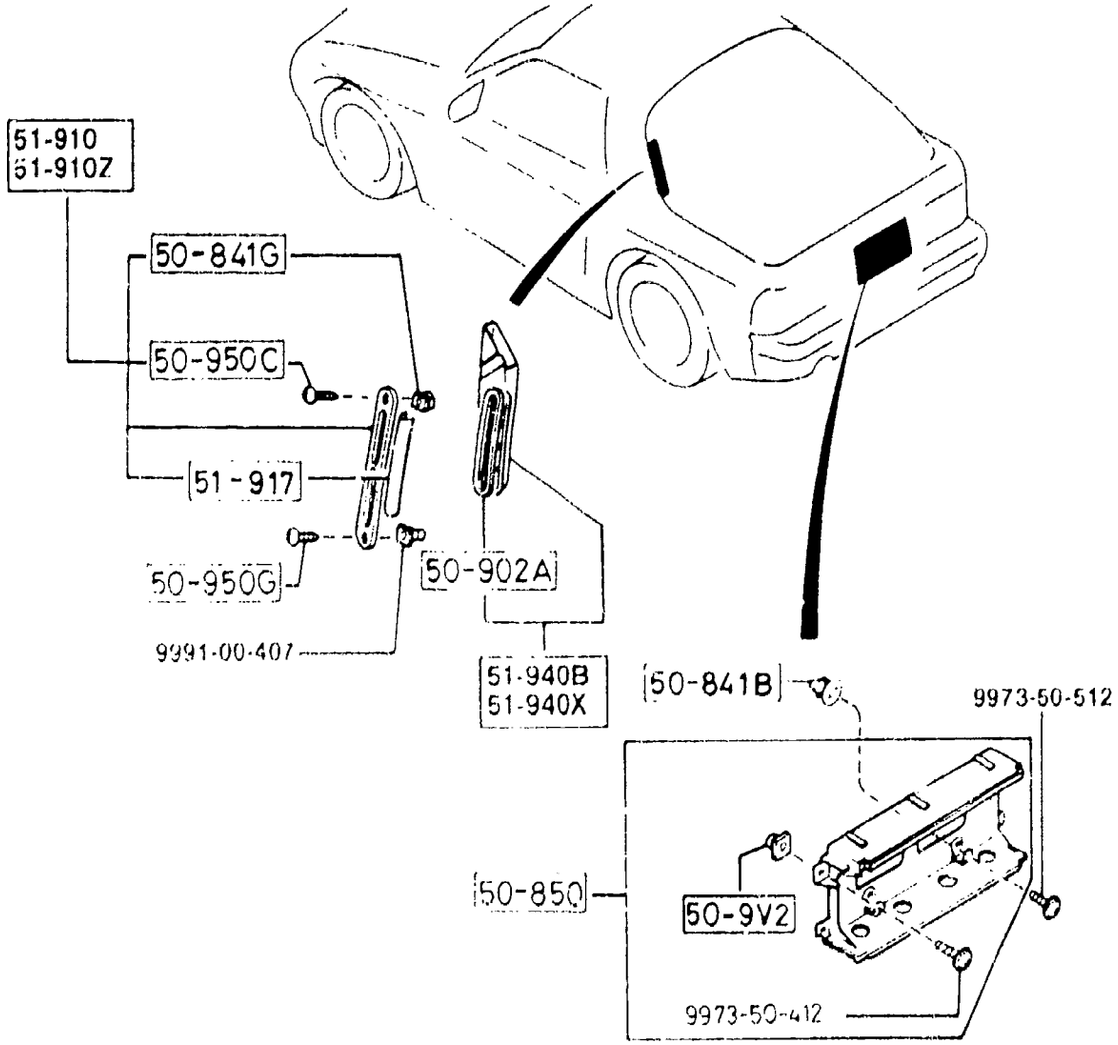




5180 -1 COWL & EXTRACTOR GRILLES

| PART NO. | QTY | MODEL/RESTRICTION | MODEL/RESTRICTION | MODEL/RESTRICTION | FROM-TO |
|---|---|---|---|---|---|
| 50-7P1A | | GRILLE(R),COWL-LOWER | | | |
| FB01-50-7P1A | 1 | | | | |
| 50-753A | | FASTENER | | | |
| G043-50-753 | 4 | (CONVERTIBLE) | | | |
| 50-754G | | GROMMET,SCREW | | | |
| FB01-50-818 | 4 | | | | |
| 50-781 | | PROTECTOR,COWL GRILLE | | | |
| FB01-50-792 | 1 | | | | |
| 50-791 | | GRILLE,COWL | | | |
| FB01-50-790B | 1 | | | | |
| 50-841B | | GROMMET,SCREW | | | |
| FB01-50-841 | 3 | (CPE) | | | |
| 50-841G | | GROMMET,SCREW | | | |
| F044-51-912 | 2 | (CPE) | | | |
| F044-51-912 | 3 | (CONVERTIBLE) | | | |
| 50-850 | | FINISHER,REAR | | | |
| FB67-50-850B | 1 | (CONVERTIBLE) | | | |
| FC01-50-850 | 1 | (CPE) | | | |
| 50-853D | | REINF.(UP),FINISHER-REAR | | | |
| FB67-50-853 | 1 | (CONVERTIBLE) | | | |
| 50-854F | | REINF.(LWR),FINISHER-REAR | | | |
| FB67-50-854 | 1 | (CONVERTIBLE) | | | |
| 50-855 | | BRACKET NO.1,FINISHER-REAR | | | |
| FB67-50-855A | 1 | (CONVERTIBLE) | | | |
| 50-855A | | PROTECTOR,RR.FINISHER | | | |
| FB67-50-852 | 1 | (CONVERTIBLE) | | | |
| 50-855G | | PROTECTOR,R.FINISHER | | | |
| FB67-50-857A | 2 | (CONVERTIBLE) | | | |

(CONVERTIBLE)

(THIS ILLUSTRATION CONSISTS OF 2 PAGES)

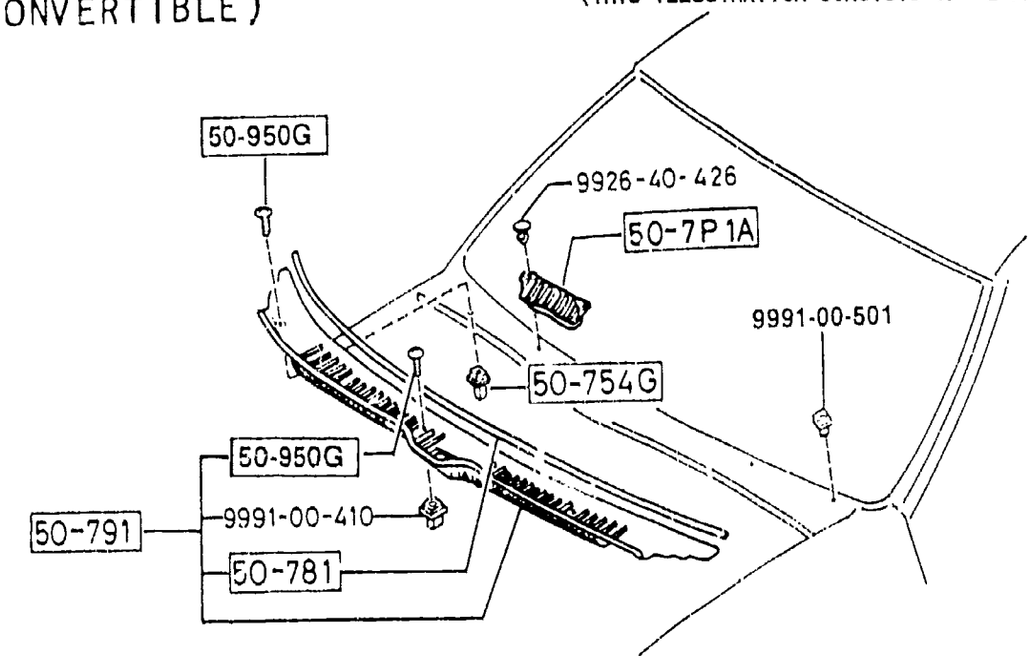


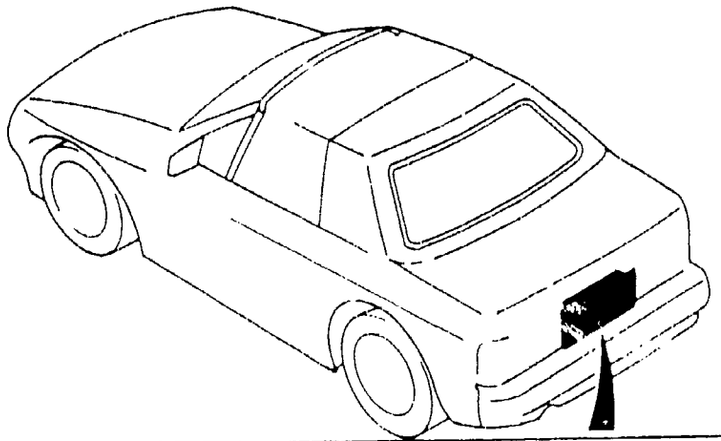

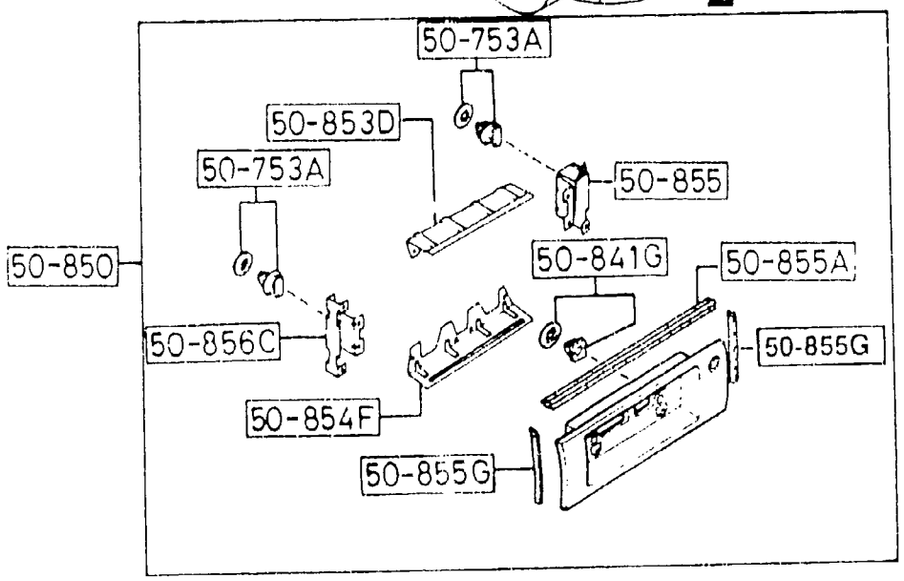


| PART NO. | QTY | MODEL/RESTRICTION | MODEL/RESTRICTION | MODEL/RESTRICTION | FROM-TO |
|---|---|---|---|---|---|
| 50-856C | | BRACKET NO.2,FINISHER-REAR | | | |
| FB67-50-856A | 1 | (CONVERTIBLE) | | | |
| 50-9V2 | | GROMMET,SCREW-ROLL B.GARN | | | |
| B250-50-9V2 | 2 | (CPE) | | | |
| 50-902A | | PLATE | | | |
| FB01-51-922 | 2 | (CPE) | | | |
| 50-950C | | SCREW | | | |
| F044-51-890A | 2 | (CPE) | | | |
| 50-950G | | SCREW,COWL GRILLE | | | |
| FB01-50-795A | 6 | (CONVERTIBLE) | | | |
| FB01-50-795A | 8 | (CPE) | | | |
| 51-910 | | GRILLE(R),EXTRACTOR | | | |
| FC01-51-910 | 1 | (CPE) | | | |
| 51-910Z | | GRILLE(L),EXTRACTOR | | | |
| FC01-51-930 | 1 | (CPE) | | | |
| 51-917 | | SEAL,RUBBER | | | |
| FC01-51-917 | 2 | (CPE) | | | |
| 51-940B | | CHAMBER(R),EXTRACTOR | | | |
| FB01-51-920A | 1 | (CPE) | | | |
| 51-940X | | CHAMBER(L),EXTRACTOR | | | |
| FB01-51-940A | 1 | (CPE) | | | |

5230 BONNET

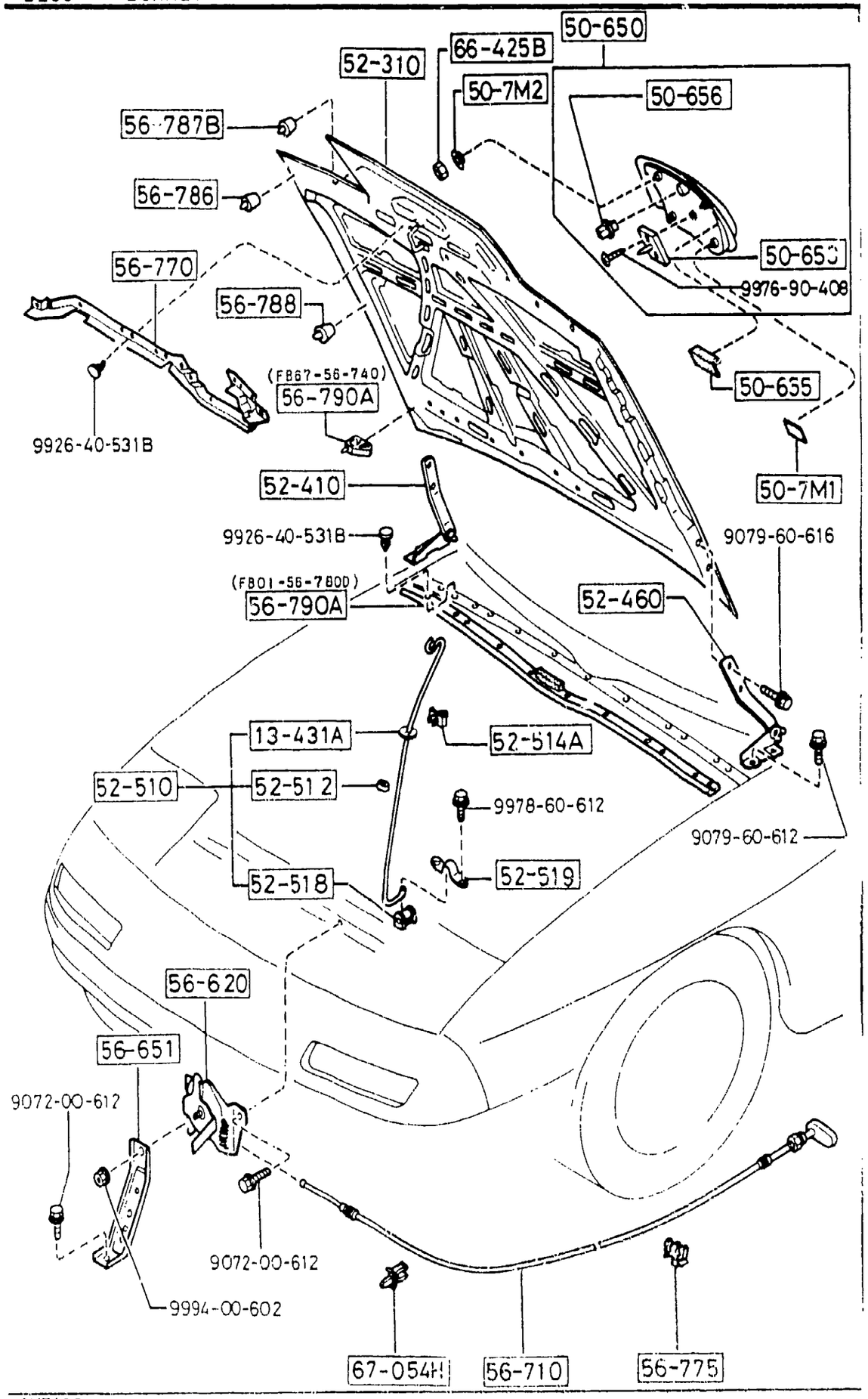


| PART NO. | QTY | MODEL/RESTRICTION | MODEL/RESTRICTION | MODEL/RESTRICTION | FROM-TO |
|---|---|---|---|---|---|
| 13-431A | | WASHER,RUBBER | | | |
| 0118-13-431 | 1 | | | | |
| 50-650 | | SCOOP,BONNET | | | |
| F044-50-650B | 1 | (TURBO) | | | |
| 50-653 | | BRACKET,BONNET BULGE | | | |
| F044-50-653A | 1 | (TURBO) | | | |
| 50-655 | | PROTECTOR,BONNET BULGE | | | |
| F044-50-655B | 2 | (TURBO) | | | |
| 50-656 | | FASTENER,BONNET BURDGE | | | |
| F044-50-656A | 1 | (TURBO) | | | |
| 50-7M1 | | PROTECTOR,BONNET BULGE | | | |
| F044-50-7M1A | 2 | (TURBO) | | | |
| 50-7M2 | | WASHER,BONNET BULGE | | | |
| F044-50-7M2 | 5 | (TURBO) | | | |
| 52-310 | | BONNET | | | |
| FB01-52-310H AN(FB01-52-310J) | 1 | | | | -0A01 |
| FB13-52-310J AN(FB13-52-310K) | 1 | | | | -1201 |
| F049-52-310N AN(F049-52-310P) | 1 | | | | -1201 |
| FB01-52-310J | 1 | ((CPE))(W/O TURBO) ) | | | 0A01- |
| FB13-52-310K | 1 | (CONVERTIBLE) | | | 1201- |
| F049-52-310P | 1 | ((CPE))(TURBO) ) | | | 1201- |
| 52-410 | | HINGE(R),BONNET | | | |
| FB01-52-410E | 1 | ((CPE))(W/O TURBO) ) | | | |
| FB13-52-410E | 1 | ((CPE))(TURBO) ) (CONVERTIBLE) | | | |
| 52-460 | | HINGE(L),BONNET | | | |
| FB01-52-420E | 1 | ((CPE))(W/O TURBO) ) | | | |
| FB13-52-420E | 1 | ((CPE))(TURBO) ) (CONVERTIBLE) | | | |

0A01 FC3***-902450
1201 FC3***-906121

AUFA03

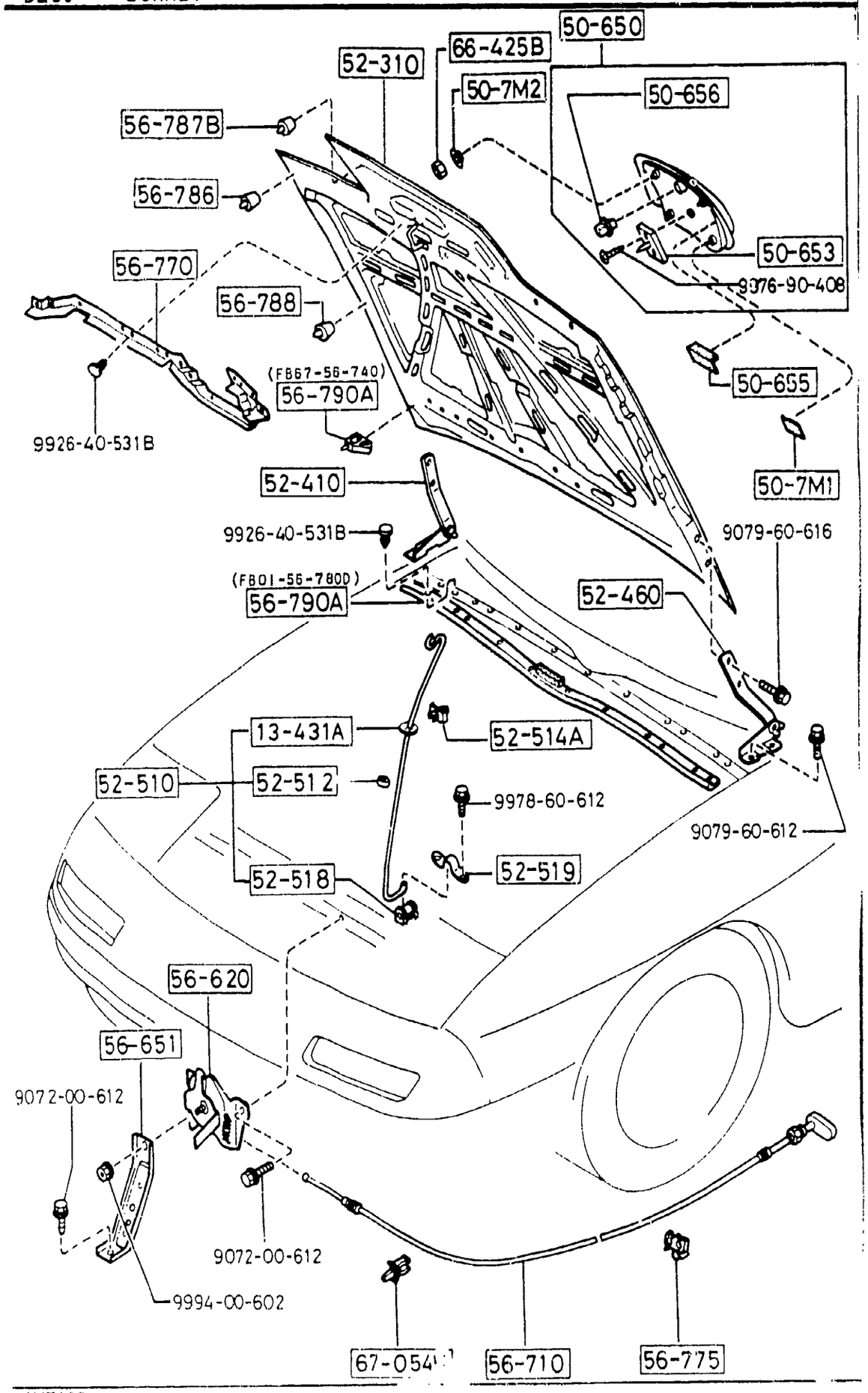


AUFA03



| PART NO. | QTY | MODEL/RESTRICTION | MODEL/RESTRICTION | MODEL/RESTRICTION | FROM-TO |
|---|---|---|---|---|---|
| 52-510 | | STAY,BONNET | | | |
| FB01-52-510D | 1 | | | | |
| 52-512 | | SPACER,BONNET STAY | | | |
| FB01-52-512 | 1 | | | | |
| 52-514A | | HOLDER,BONNET STAY-SHROUD | | | |
| FB01-52-514B | 1 | (CPE) | | | |
| FB67-52-514 | 1 | (CONVERTIBLE) | | | |
| 52-518 | | HOLDER,BONNET STAY | | | |
| FB01-52-518 | 1 | | | | |
| 52-519 | | PLATE,SET-HOLDER | | | |
| FB01-52-519A | 1 | | | | |
| 56-620 | | LOCK,BONNET | | | |
| FB02-56-620G | 1 | ((CPE))(W/O TURBO)) | | | |
| FB15-56-620G | 1 | ((CPE))(TURBO)) (CONVERTIBLE) | | | |
| 56-651 | | STAY,LOCK-BONNET | | | |
| FB01-56-651 | 1 | | | | |
| 56-710 | | WIRE,RELEASE-BONNET | | | |
| FB01-56-710C | 1 | | | | |
| 56-770 | | RUBBER(C),SEAL-BONNET FRT | | | |
| FC01-56-770 | 1 | | | | |
| 56-775 | | CLIP,WIRE-BONNET | | | |
| H260-67-519A | 3 | | | | |
| 56-786 | | RUBBER(C),CUSHION-BONNET | | | |
| FB01-56-786A | 2 | | | | |
| 56-787B | | RUBBER,CUSHION-BONNET FRT | | | |
| FB01-56-787A | 2 | | | | |
| 56-788 | | RUBBER,CUSHION-BONNET RR | | | |
| FB01-56-788 | 2 | | | | |

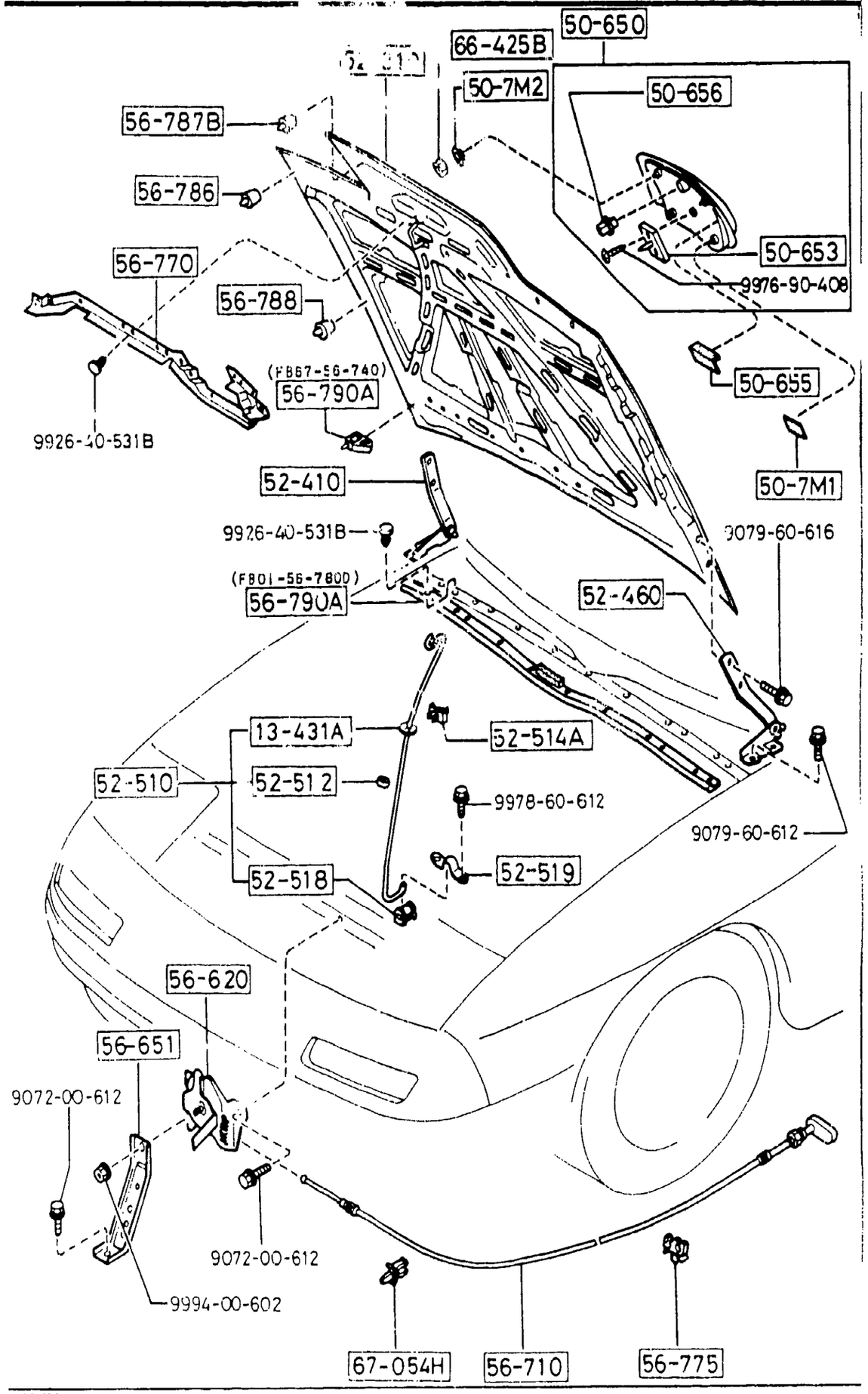


AUFA03

5230 -3 * BONNET

| PART NO. | QTY | MODEL/RESTRICTION | MODEL/RESTRICTION | MODEL/RESTRICTION | FROM-TO |
|---|---|---|---|---|---|
| 56-790A | | RUBBER,SEAL-COWL PANEL | | | |
| FB67-56-740 | 2 | (CONVERTIBLE) | | | |
| FB01-56-780D | 1 | | | | |
| 66-425B | | NUT,BONNET BULGE | | | |
| F044-50-425 | 5 | (TURBO) | | | |
| 67-054H | | CLIP,OPENER CABLE | | | |
| B130-56-897 | 1 | | | | |

CAT. AUFA03--07

1993-12

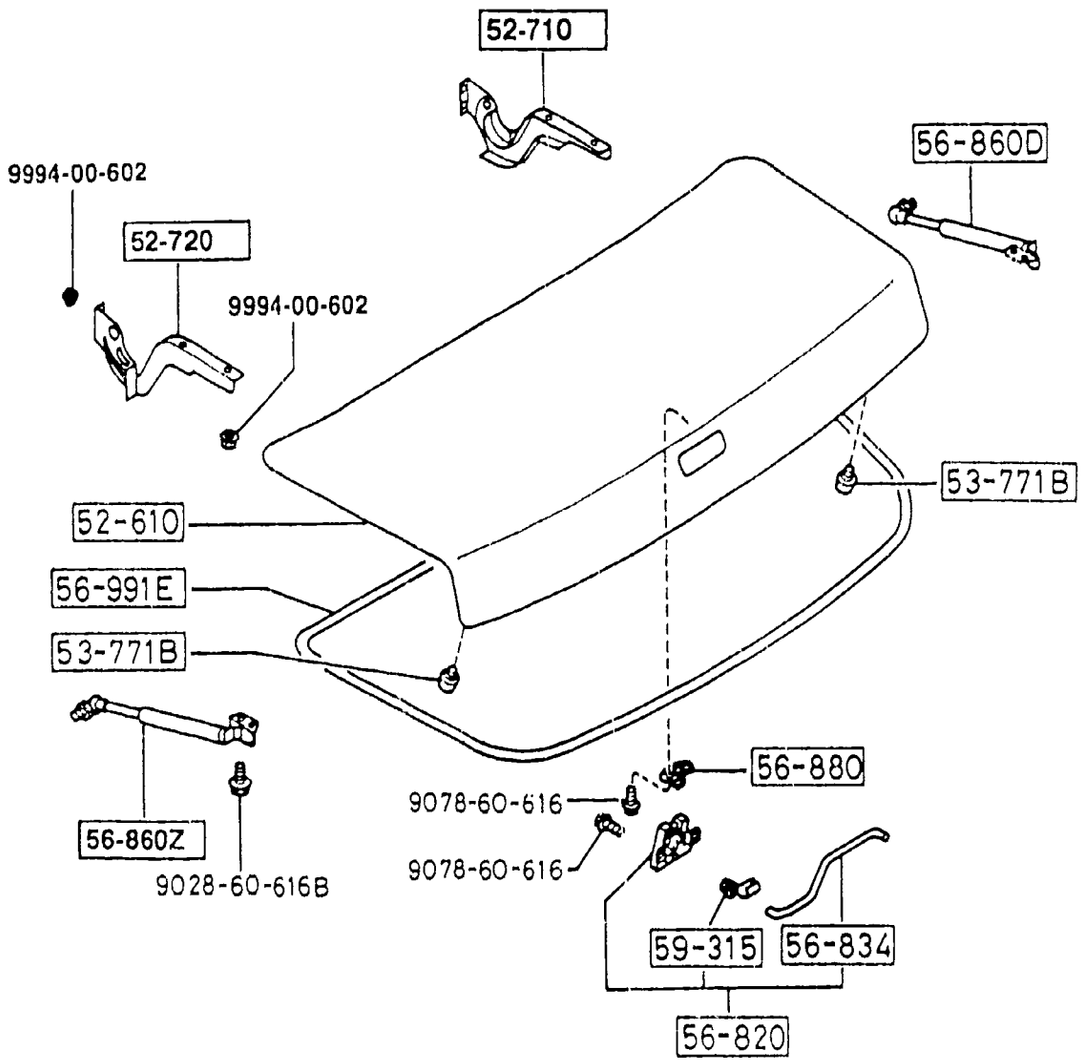


CLIP & OPENER,T/LID & F/LID
(REFER TO SECT.NO.4210)

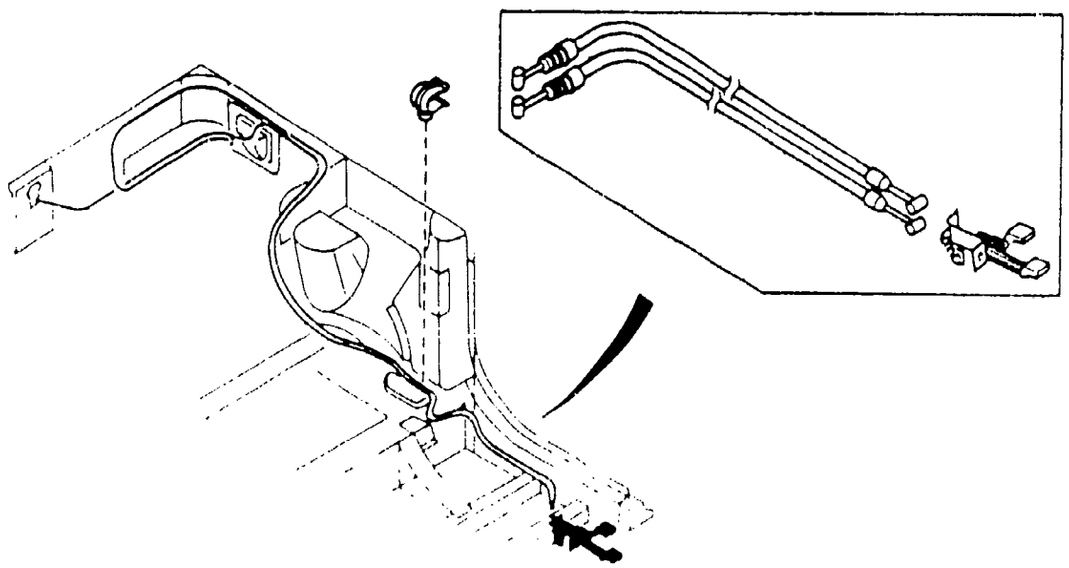

AUFA03

5260 -1 * TRUNK LID
(CONVERTIBLE)

| PART NO. | QTY | MODEL/RESTRICTION | MODEL/RESTRICTION | MODEL/RESTRICTION | FROM-TO |
|---|---|---|---|---|---|
| 52-610 | | LID,TRUNK | | | |
| FB67-52-610A<br>AN(FB67-52-610B) | 1 | | | | -0A01 |
| FB67-52-610B<br>A (FB67-52-610C) | 1 | | | | 0A01-1601 |
| FB67-52-610C | 1 | | | | 1601- |
| 52-710 | | HINGE(R),TRUNK LID | | | |
| FB67-52-710A | 1 | | | | |
| 52-720 | | HINGE(L),TRUNK LID | | | |
| FB67-52-720A | 1 | | | | |
| 53-771B | | RUBBER,CUSHION | | | |
| FB67-56-812 | 2 | | | | |
| 56-820 | | LOCK,LID | | | |
| FB67-56-820 | 1 | | | | |
| 56-834 | | ROD,TRUNK OPENING | | | |
| FB67-56-835 | 1 | | | | |
| 56-860D | | STAY(R),DAMPER-TRUNK LID | | | |
| 8BF1-56-860 | 1 | | | | |
| 56-860Z | | STAY(L),DAMPER-TRUNK LID | | | |
| 8BF1-56-870 | 1 | | | | |
| 56-880 | | STRIKER,LID | | | |
| FB67-56-840 | 1 | | | | |
| 56-991E | | WEATHERSTRIP,LID | | | |
| FB67-56-952 | 1 | | | | |
| 59-315 | | CLIP | | | |
| G030-59-315 | 1 | | | | |

0A01 FC3***-902450
1601 FC3***-907848

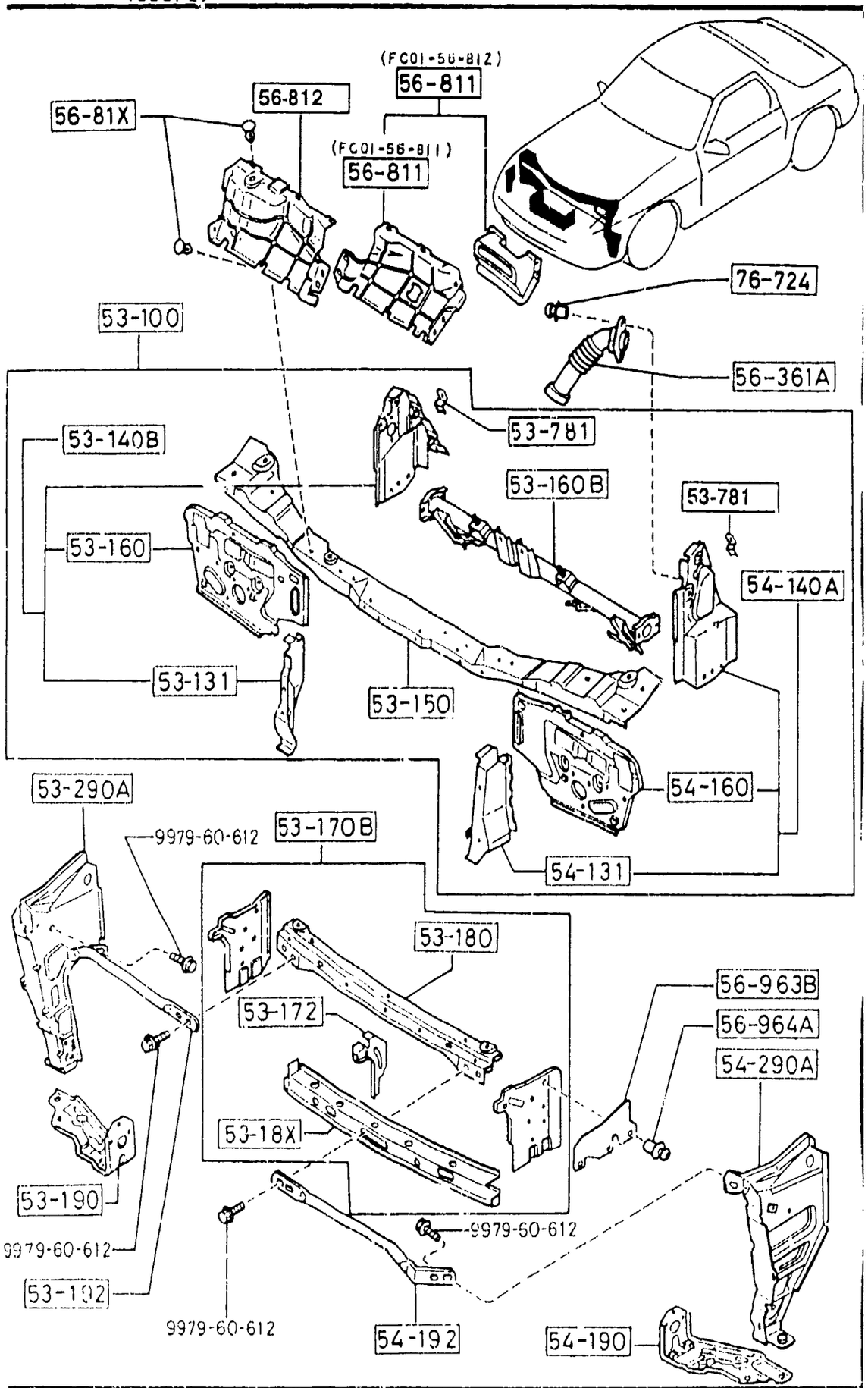


AUFA03

5310 -1 FRONT PANELS
(COUPE)

| PART NO. | QTY | MODEL/RESTRICTION | MODEL/RESTRICTION | MODEL/RESTRICTION | FROM-TO |
|---|---|---|---|---|---|
| 53-100 | | PANEL,RAD.SHROUD | | | |
| FB01-53-100N | 1 | | | | |
| 53-131 | | REINF.(R),RAD. SHROUD | | | |
| FB01-53-131A | 1 | | | | |
| 53-140B | | PANEL(R),SHROUD-SIDE | | | |
| FB01-53-12XD | 1 | | | | |
| 53-150 | | PLATE,SHROUD-UPPER | | | |
| FB01-53-150D | 1 | | | | |
| 53-160 | | PANEL(R),SHROUD | | | |
| FB01-53-120C | 1 | | | | |
| 53-160B | | MEMBER,CROSS | | | |
| FB01-53-160 | 1 | | | | |
| 53-170B | | PLATE,SET-FASCIA | | | |
| FC01-53-170 | 1 | | | | |
| 53-172 | | STAY,SET PLATE-FASCIA | | | |
| FB01-53-172 | 1 | | | | |
| 53-18X | | BRACKET,RELAY-SET PLATE | | | |
| FC01-53-18X | 1 | | | | |
| 53-180 | | PLATE(UP.),SET-FASCIA | | | |
| FC66-53-180 | 1 | | | | |
| 53-190 | | STAY(R),FENDER-LOWER | | | |
| FC01-53-190 | 1 | | | | |
| 53-192 | | STAY(R),FENDER-UPPER | | | |
| FB01-53-192 | 1 | | | | |
| 53-290A | | BRACKET(R),FENDER | | | |
| FB01-53-110A | 1 | | | | |
| 53-781 | | BRACKET,GRILLE-C | | | |
| 0305-53-781A | 2 | | | | |

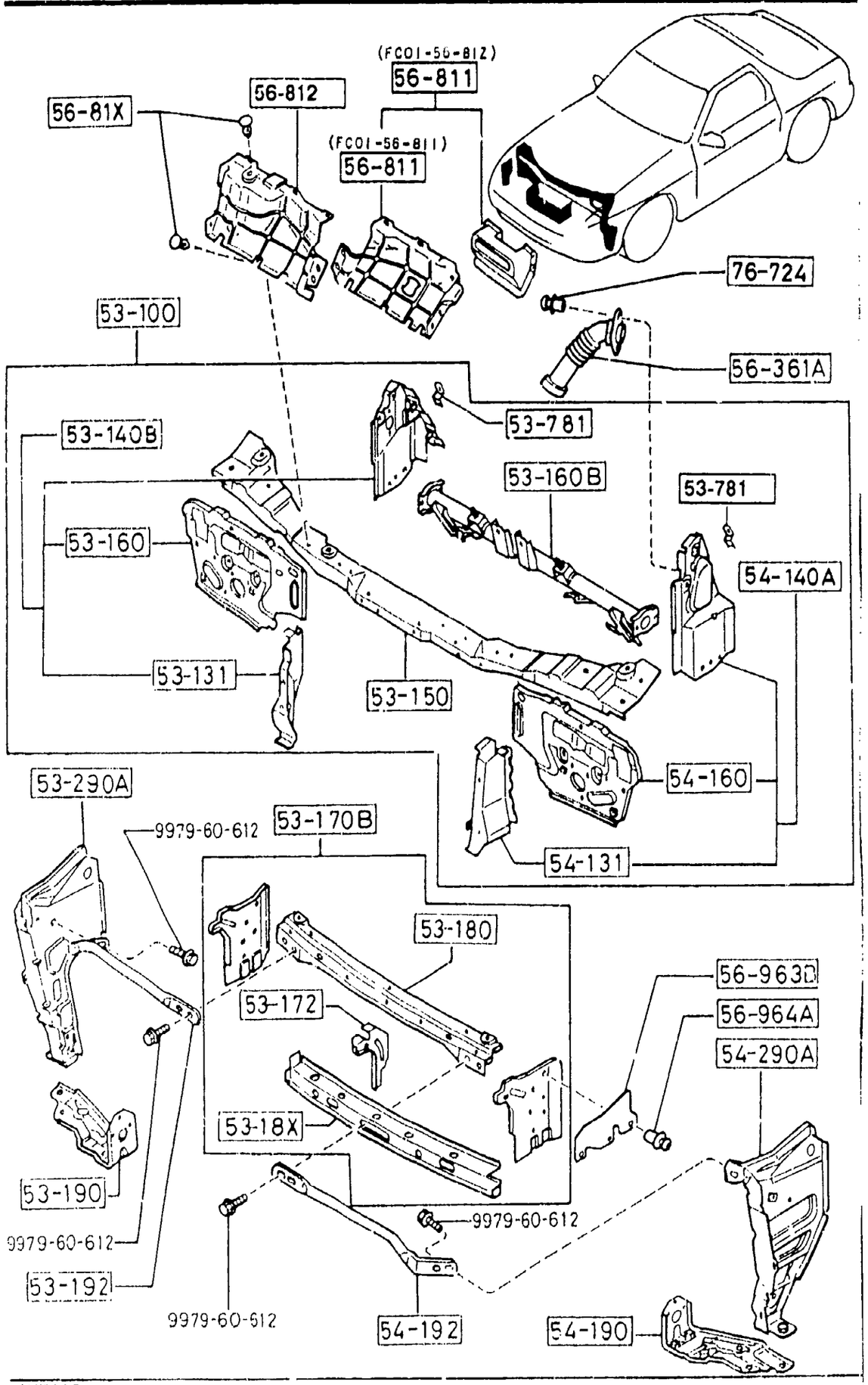




| PART NO. | QTY | MODEL/RESTRICTION | MODEL/RESTRICTION | MODEL/RESTRICTION | FROM-TO |
|---|---|---|---|---|---|
| 54-131 | | REINF.(L),RAD. SHROUD | | | |
| FB01-54-131A | 1 | | | | |
| 54-140A | | PANEL(L),SHROUD-SIDE | | | |
| FB01-54-12XE | 1 | | | | |
| 54-160 | | PANEL(L),SHROUD | | | |
| FB01-54-120D | 1 | | | | |
| 54-190 | | STAY(L),FENDER-LOWER | | | |
| FC01-54-190 | 1 | | | | |
| 54-192 | | STAY(L),FENDER-UPPER | | | |
| FB01-54-192 | 1 | | | | |
| 54-290A | | BRACKET(L),FENDER | | | |
| FB01-54-110B | 1 | | | | |
| 56-361A | | DUCT,AIR-RADIATOR SHROUD | | | |
| FB01-56-361A | 1 | | | | |
| 56-81X | | FASTENER,DUCT PANEL | | | |
| FB01-56-81X | 10 | | | | |
| 56-811 | | PANEL(L),DUCT-RAD. SHROUD | | | |
| FC01-56-81Z | 1 | | | | |
| FC01-56-811 | 1 | | | | |
| 56-812 | | PANEL(R),DUCT-RAD. SHROUD | | | |
| FB01-56-812 | 1 | | | | |
| 56-963B | | PLATE,SEAL-RAD. SHROUD | | | |
| FB01-56-963 | 1 | | | | |
| 56-964A | | RIVET,SEAL PLATE-SHROUD | | | |
| FB01-56-964 | 3 | | | | |
| 76-724 | | RIVET | | | |
| B092-51-833 | 2 | | | | |

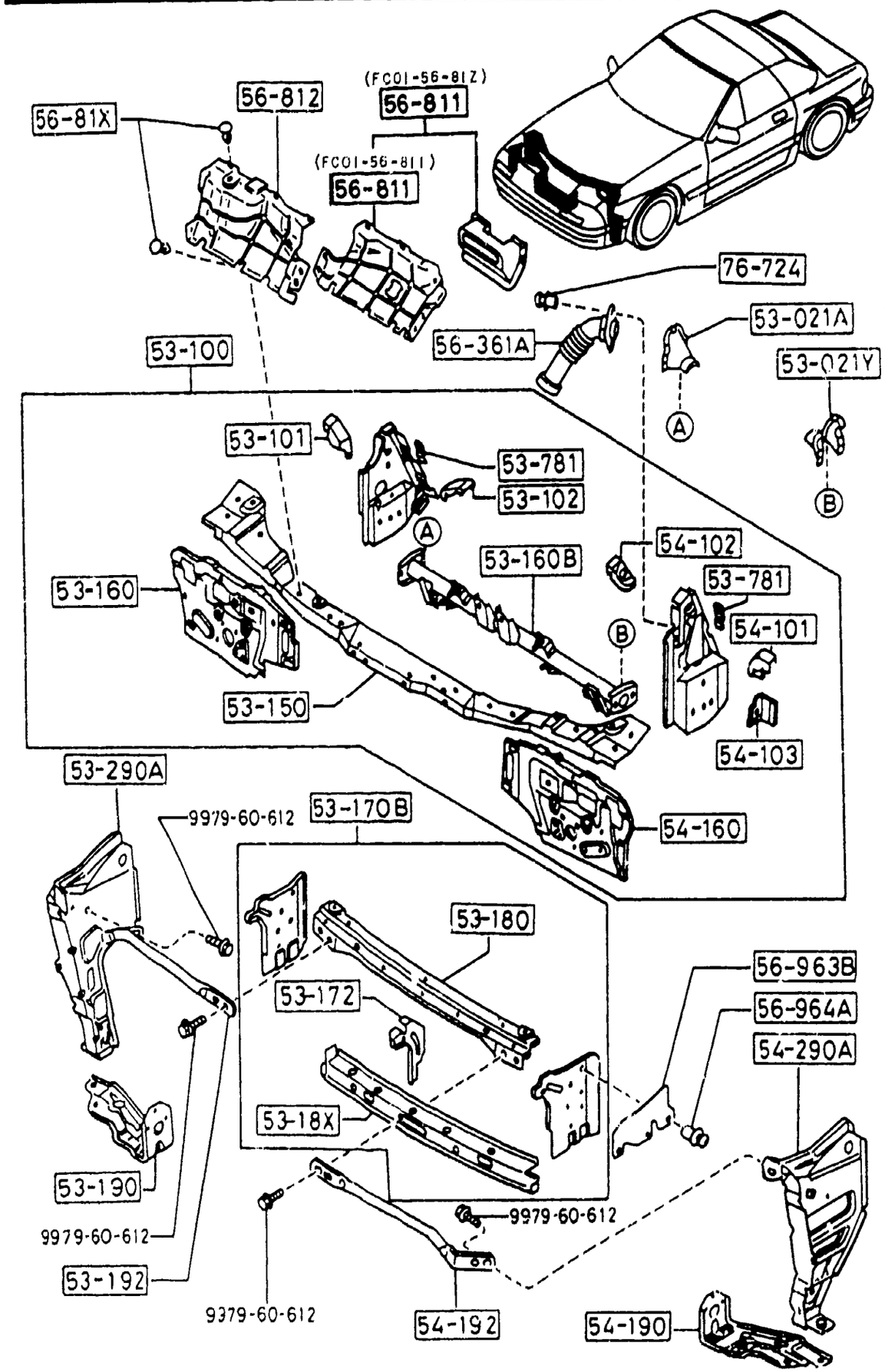


AUFA03



| PART NO. | QTY | MODEL/RESTRICTION | MODEL/RESTRICTION | MODEL/RESTRICTION | FROM-TO |
|---|---|---|---|---|---|
| 53-021A<br>FB67-53-021 | 1 | GUSSET(R),CROSSMEMBER NO1 | | | |
| 53-021Y<br>FB67-54-021 | 1 | GUSSET(L),CROSSMEMBER NO1 | | | |
| 53-100<br>FC66-53-100 | 1 | PANEL,RAD.SHROUD | | | |
| 53-101<br>FB67-53-101 | 1 | REINF.'A'(R),RAD. SHROUD | | | |
| 53-102<br>FB67-53-102 | 1 | REINF.'B'(R),RAD. SHROUD | | | |
| 53-150<br>FC66-53-150 | 1 | PLATE,SHROUD-UPPER | | | |
| 53-160<br>FB67-53-12XD | 1 | PANEL(R),SHROUD | | | |
| 53-160B<br>FB67-53-160 | 1 | MEMBER,CROSS | | | |
| 53-170B<br>FC66-53-170 | 1 | PLATE,SET-FASCIA | | | |
| 53-172<br>FB01-53-172 | 1 | STAY,SET PLATE-FASCIA | | | |
| 53-18X<br>FC01-53-18X | 1 | BRACKET,RELAY-SET PLATE | | | |
| 53-180<br>FC66-53-180 | 1 | PLATE(UP.),SET-FASCIA | | | |
| 53-190<br>FC01-53-190 | 1 | STAY(R),FENDER-LOWER | | | |
| 53-192<br>FB01-53-192 | 1 | STAY(R),FENDER-UPPER | | | |

CAT. AUFA03-07

1993-12

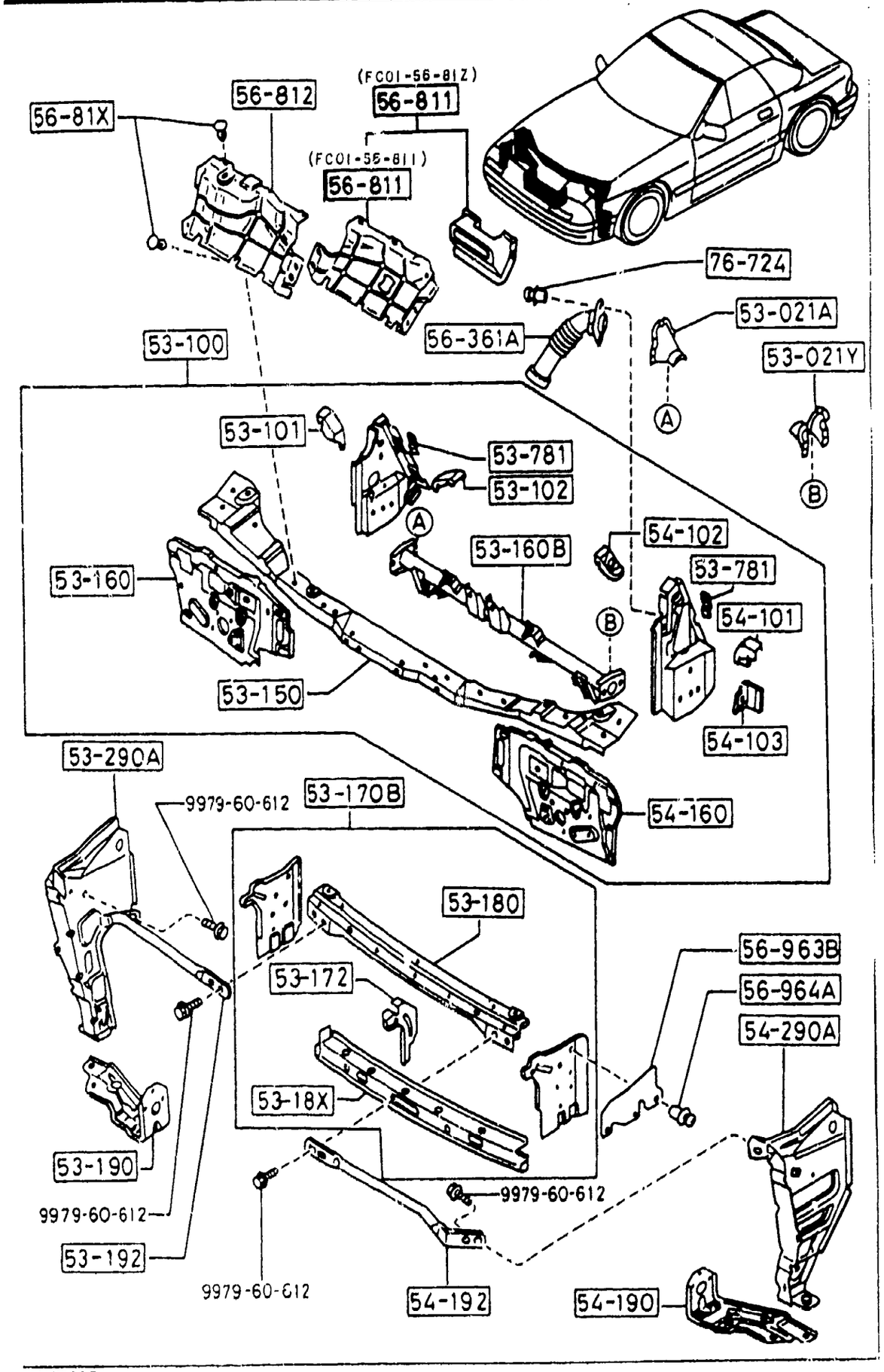




| PART NO. | QTY | MODEL/RESTRICTION | MODEL/RESTRICTION | MODEL/RESTRICTION | FROM-TO |
|---|---|---|---|---|---|
| 53-290A<br>FB01-53-110A | 1 | BRACKET(R),FENDER | | | |
| 53-781<br>0305-53-781A | 2 | BRACKET,GRILLE-U | | | |
| 54-101<br>FB67-54-101 | 1 | REINF.'A'(L),RAD. SHROUD | | | |
| 54-102<br>FB67-54-102 | 1 | REINF.'B'(L),RAD. SHROUD | | | |
| 54-103<br>FB67-54-103 | 1 | REINF.'C'(L),RAD. SHROUD | | | |
| 54-160<br>FB67-54-12XD | 1 | PANEL(L),SHROUD | | | |
| 54-190<br>FC01-54-190 | 1 | STAY(L),FENDER-LOWER | | | |
| 54-192<br>FB01-54-192 | 1 | STAY(L),FENDER-UPPER | | | |
| 54-290A<br>FB01-54-110B | 1 | BRACKET(L),FENDER | | | |
| 56-361A<br>FB01-56-361A | 1 | DUCT,AIR-RADIATOR SHROUD | | | |
| 56-81X<br>FB01-56-81X | 10 | FASTENER,DUCT PANEL | | | |
| 56-811<br>FC01-56-81Z | 1 | PANEL(L),DUCT-RAD. SHROUD | | | |
| FC01-56-811 | 1 | | | | |
| 56-812<br>FB01-56-812 | 1 | PANEL(R),DUCT-RAD. SHROUD | | | |

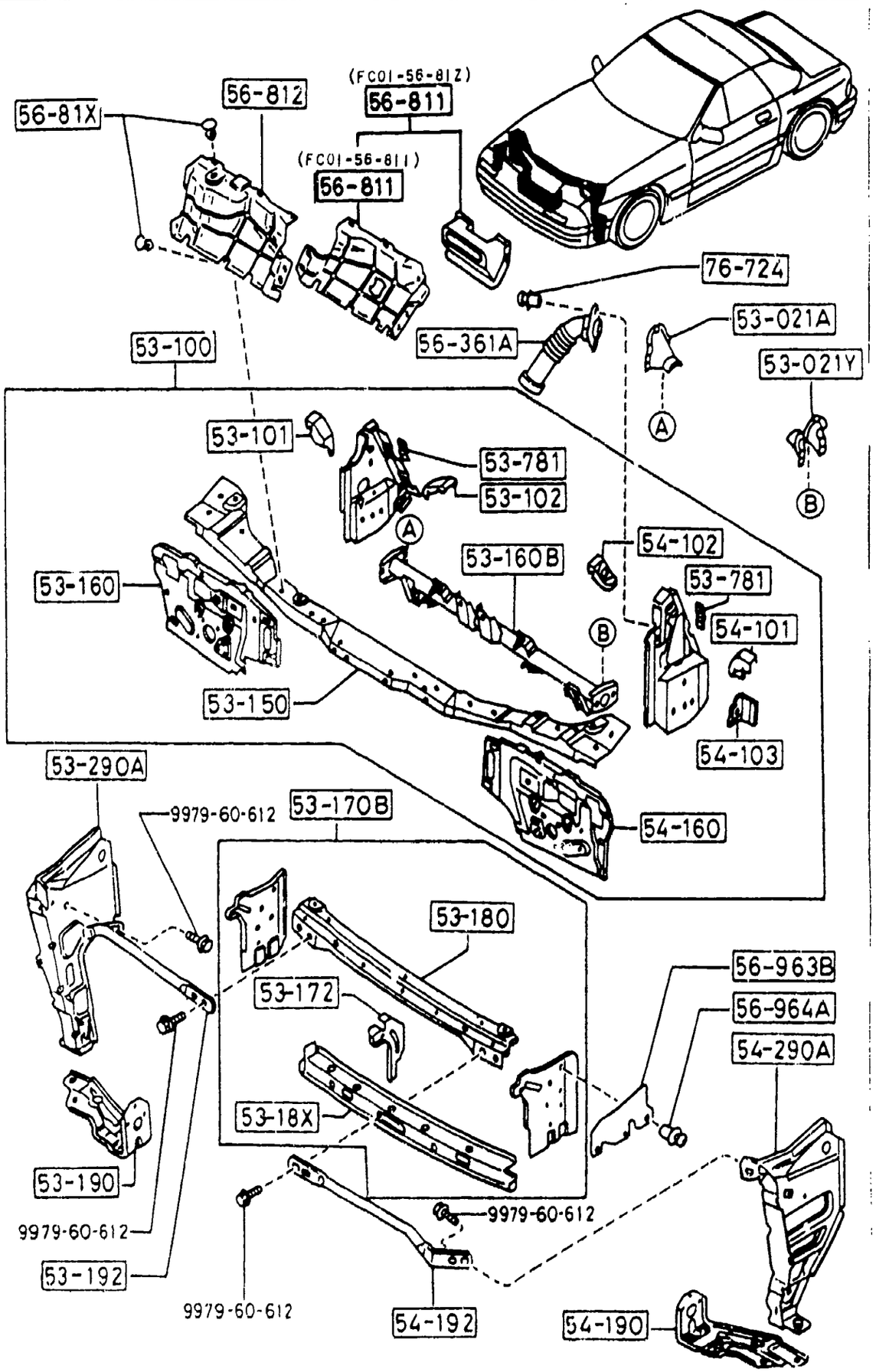




| PART NO. | QTY | MODEL/RESTRICTION | MODEL/RESTRICTION | MODEL/RESTRICTION | FROM-TO |
|---|---|---|---|---|---|
| 56-963B<br>FB01-56-963 | 1 | PLATE,SEAL-RAD. SHROUD | | | |
| 56-964A<br>FB01-56-964 | 3 | RIVET,SEAL PLATE-SHROUD | | | |
| 76-724<br>B092-51-833 | 2 | RIVET | | | |

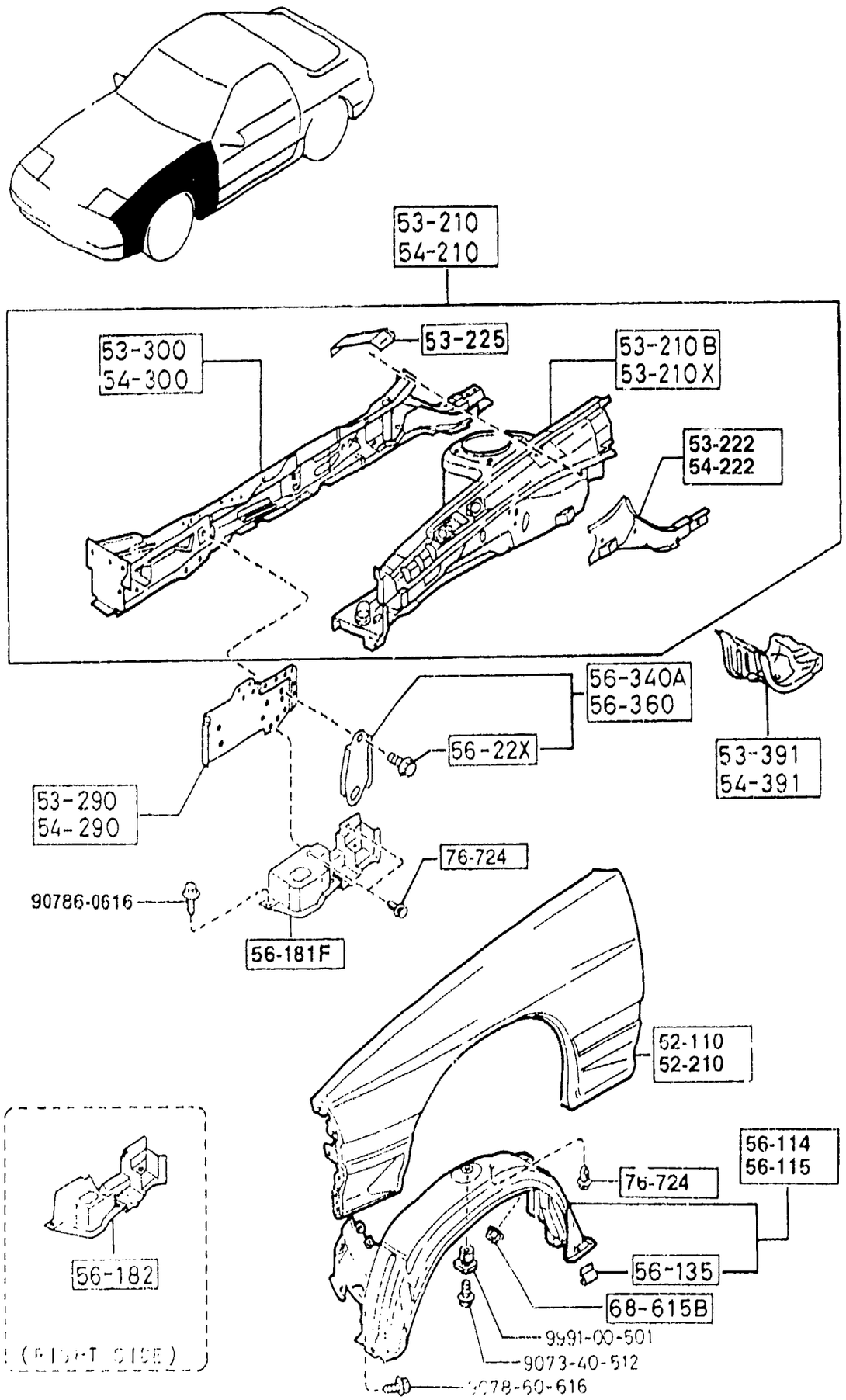




| PART NO. | QTY | MODEL/RESTRICTION | MODEL/RESTRICTION | MODEL/RESTRICTION | FROM-TO |
|---|---|---|---|---|---|
| +---------+ | | | | | |
| \| 52-110 \| | | PANEL(R),FENDER-FRT. | | | |
| +---------+ | | | | | |
| FC01-52-111 | 1 | (W/O TURBO) | | | |
| FC17-52-111 | 1 | (TURBO) | | | |
| +---------+ | | | | | |
| \| 52-210 \| | | PANEL(L),FENDER-FRT. | | | |
| +---------+ | | | | | |
| FC01-52-211 | 1 | (W/O TURBO) | | | |
| FC17-52-211 | 1 | (TURBO) | | | |
| +---------+ | | | | | |
| \| 53-210 \| | | PANEL(R),WHEEL APRON | | | |
| +---------+ | | | | | |
| FB01-53-200F AN(FB01-53-200G) | 1 | | | | -0A01 |
| FB34-53-200F AN(FB34-53-200G) | 1 | | | | -0A01 |
| FB01-53-200G | 1 | (W/O TURBO) | | | 0A01- |
| FB34-53-200G | 1 | (TURBO) | | | 0A01- |
| +---------+ | | | | | |
| \| 53-210B \| | | PANEL(R),WHEEL APRON | | | |
| +---------+ | | | | | |
| FB01-53-210J AN(FB01-53-210K) | 1 | | | | -0A01 |
| FB34-53-210H AN(FB34-53-210J) | 1 | | | | -0A01 |
| FB01-53-210K | 1 | (W/O TURBO) | | | 0A01- |
| FB34-53-210J | 1 | (TURBO) | | | 0A01- |
| +---------+ | | | | | |
| \| 53-210X \| | | PANEL(L),WHEEL APRON | | | |
| +---------+ | | | | | |
| FB01-54-210N AN(FB01-54-210P) | 1 | | | | -0A01 |
| F044-54-210N AN(F044-54-210P) | 1 | | | | -0A01 |
| FB01-54-210P | 1 | (W/O TURBO) | | | 0A01- |
| F044-54-210P | 1 | (TURBO) | | | 0A01- |
| +---------+ | | | | | |
| \| 53-222 \| | | PLATE(RR.,R),CLOSING | | | |
| +---------+ | | | | | |
| FB01-53-250A | 1 | | | | |
| +---------+ | | | | | |
| \| 53-225 \| | | REINF.(R),A.B.S.-APRON | | | |
| +---------+ | | | | | |
| FB34-53-225 | 1 | (TURBO) | | | |
| +---------+ | | | | | |
| \| 53-290 \| | | PLATE(F.,R),CLOSING | | | |
| +---------+ | | | | | |
| FC66-53-240C | 1 | | | | |

0A01 FC3***-902450

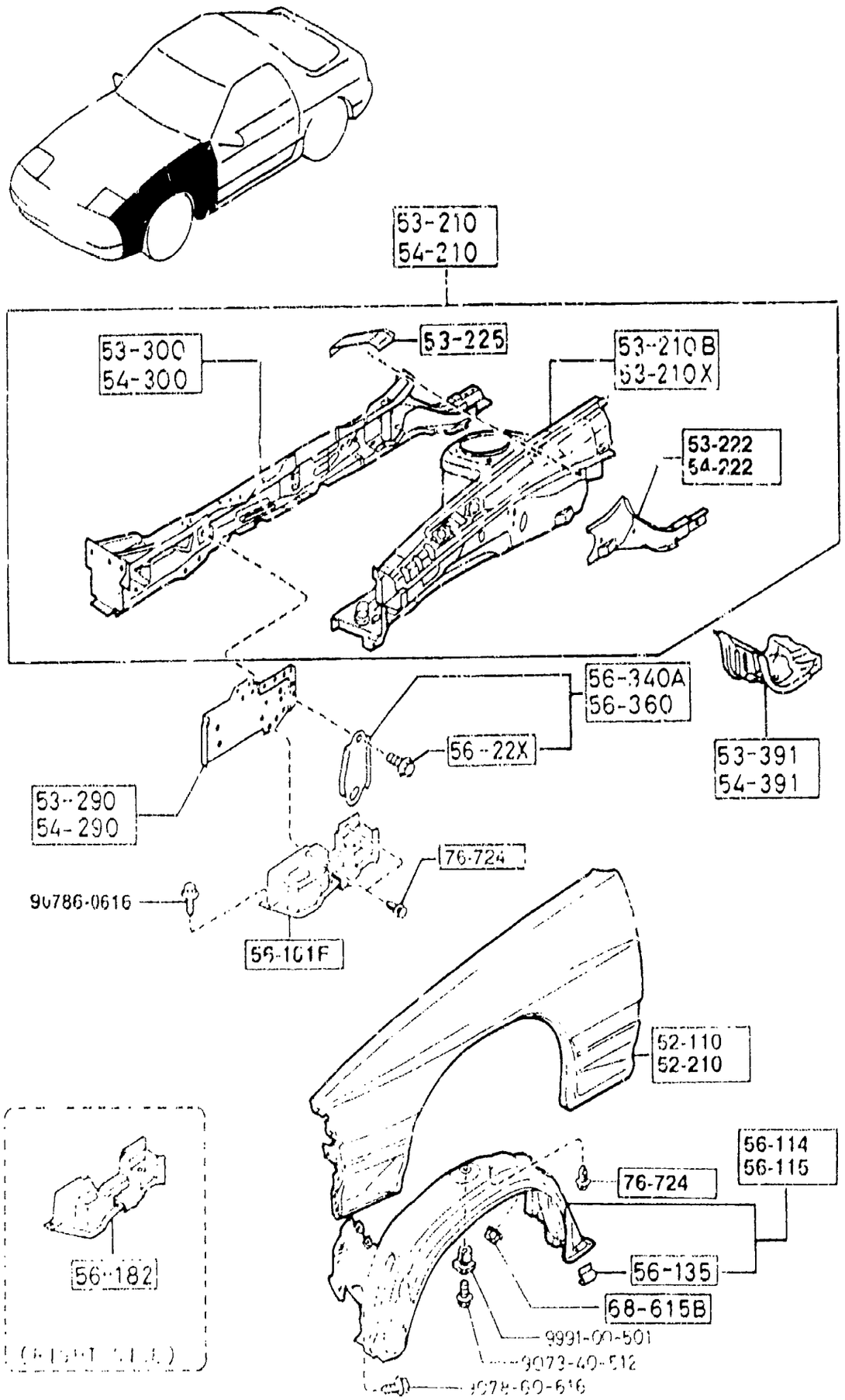




| PART NO. | QTY | MODEL/RESTRICTION | MODEL/RESTRICTION | MODEL/RESTRICTION | FROM-TO |
|---|---|---|---|---|---|
| 53-300 | | FRAME(R),SIDE-FRONT | | | |
| FC01-53-310 | 1 | | | | |
| 53-391 | | BOX(R),TORQUE | | | |
| FB01-53-391A | 1 | | | | |
| 54-210 | | PANEL(L),WHEEL APRON | | | |
| FB01-54-200K AN(FB01-54-200L) | 1 | | | | --0A01 |
| FC49-54-200A AN(FC49-54-200B) | 1 | | | | -0A01 |
| FB01-54-200L | 1 | (W/O TURBO) | | | 0A01- |
| FC49-54-200B | 1 | (TURBO) | | | 0A01- |
| 54-222 | | PLATE(RR.,L),CLOSING | | | |
| FB01-54-250A | 1 | | | | |
| 54-290 | | PLATE(F.,L),CLOSING | | | |
| FC66-54-240C | 1 | | | | |
| 54-300 | | FRAME(L),SIDE-FRONT | | | |
| FC01-54-310 | 1 | | | | |
| 54-391 | | BOX(L),TORQUE | | | |
| FB01-54-391A | 1 | | | | |
| 56-114 | | GUARD(R),MUD | | | |
| FC01-56-130 | 1 | | | | |
| 56-115 | | GUARD(L),MUD | | | |
| FC01-56-140 | 1 | | | | |
| 56-135 | | RUBBER,STOP | | | |
| 8173-56-135 | 10 | | | | |
| 56-181F | | PLATE(L),SEAL-CLOSING | | | |
| FB01-56-181A | 1 | | | | |
| 56-182 | | PLATE(R),SEAL-CLOSING | | | |
| FB01-56-182A | 1 | | | | |

0A01 'C3***-902450

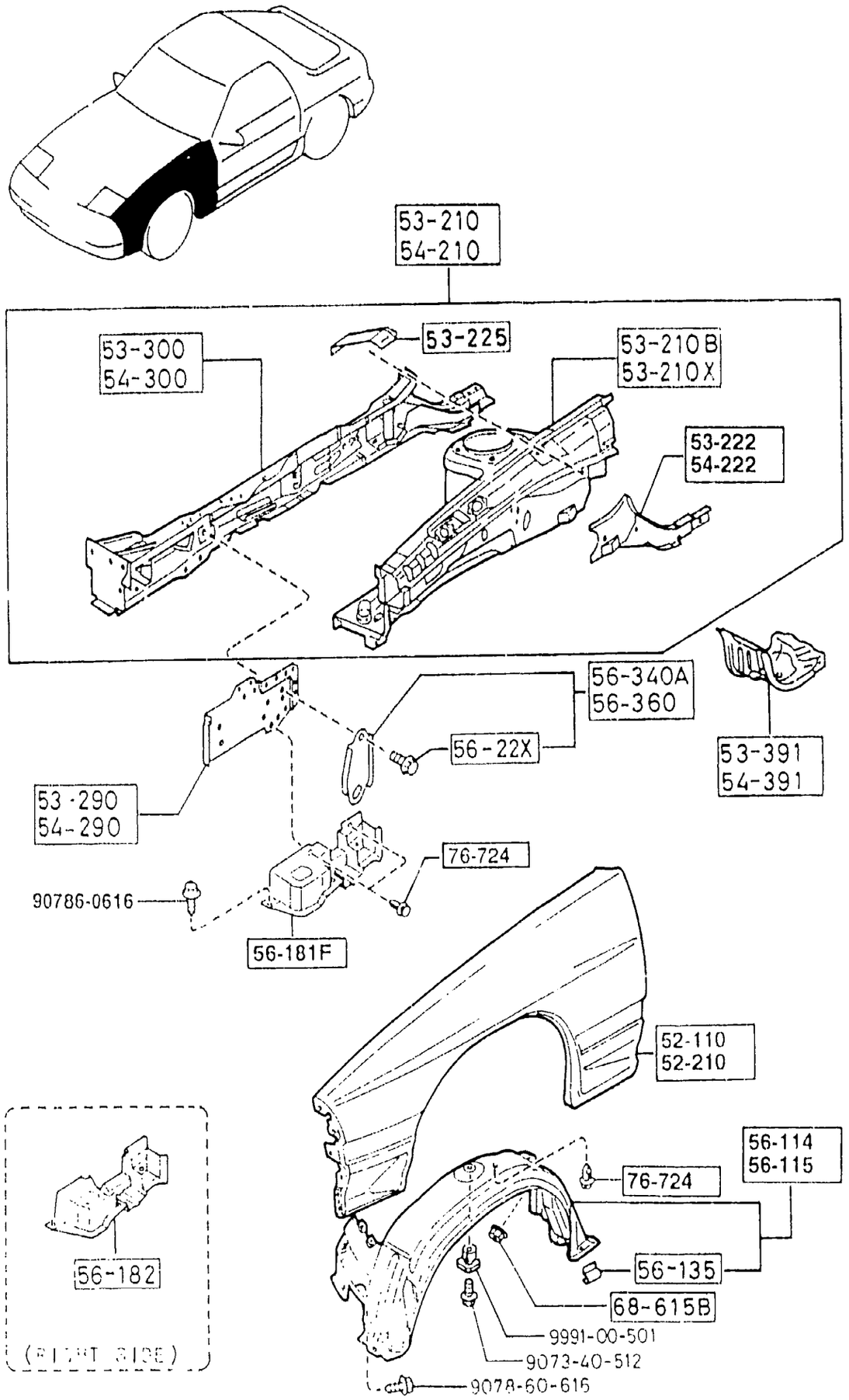




| PART NO. | QTY | MODEL/RESTRICTION | MODEL/RESTRICTION | MODEL/RESTRICTION | FROM TO |
|---|---|---|---|---|---|
| 56-22X<br>FB01-56-22X | 6 | BOLT,TIE DOWN HOOK-FRONT | | | |
| 56-340A<br>FB01-56-221A | 1 | HOOK(R),TIE DOWN-FRONT | | | |
| 56-360<br>FB01-56-231A | 1 | HOOK(L),TIE DOWN-FRONT | | | |
| 68-615B<br>B100-68-615 | 2 | NUT,FLANGE-CAP | | | |
| 76-724<br>*B092-51-833 | 6 | RIVET | | | |

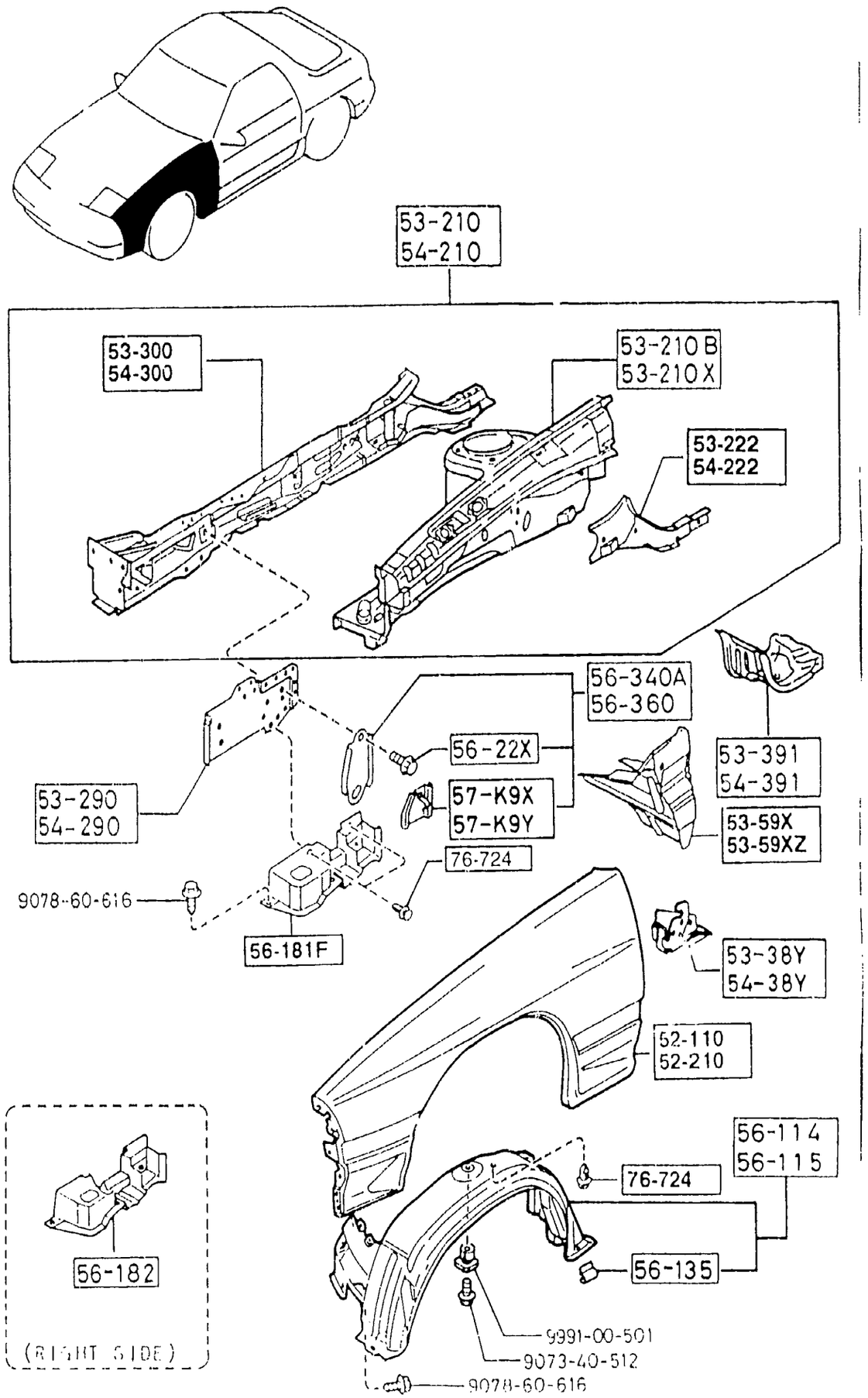






| PART NO. | QTY | MODEL/RESTRICTION | MODEL/RESTRICTION | MODEL/RESTRICTION | FROM-10 |
|---|---|---|---|---|---|
| 52-110 | | PANEL(R),FENDER-FRT. | | | |
| FC01-52-111 | 1 | | | | |
| 52-210 | | PANEL(L),FENDER-FRT. | | | |
| FC01-52-211 | 1 | | | | |
| 53-210 | | PANEL(R),WHEEL APRON | | | |
| FC66-53-200 | 1 | | | | -0A01 |
| AN(FC66-53-200A) | | | | | |
| FC66-53-200A | 1 | | | | 0A01- |
| 53-210B | | PANEL(R),WHEEL APRON | | | |
| FC66-53-210 | 1 | | | | -0A01 |
| AN(FC66-53-210A) | | | | | |
| FC66-53-210A | 1 | | | | 0A01- |
| 53-210X | | PANEL(L),WHEEL APRON | | | |
| FC66-54-210 | 1 | | | | -0A01 |
| AN(FC66-54-210A) | | | | | |
| FC66-54-210A | 1 | | | | 0A01- |
| 53-222 | | PLATE(RR.,R),CLOSING | | | |
| FB01-53-250A | 1 | | | | |
| 53-290 | | PLATE(F.,R),CLOSING | | | |
| FC66-53-240C | 1 | | | | |
| 53-300 | | FRAME(R),SIDE-FRONT | | | |
| FC33-53-310A | 1 | | | | |
| 53-38Y | | BRACKET(R),CLOSING PLATE | | | |
| FB67-53-38YC | 1 | | | | |
| 53-391 | | BOX(R),TORQUE | | | |
| FB67-53-391A | 1 | | | | |
| 53-59X | | REINF.(R),WHEEL APRON | | | |
| FC56-53-59X | 1 | | | | |
| 53-59XZ | | REINF.(L),WHEEL APRON | | | |
| FC56-54-59X | 1 | | | | |

0A01 FC3***-902450

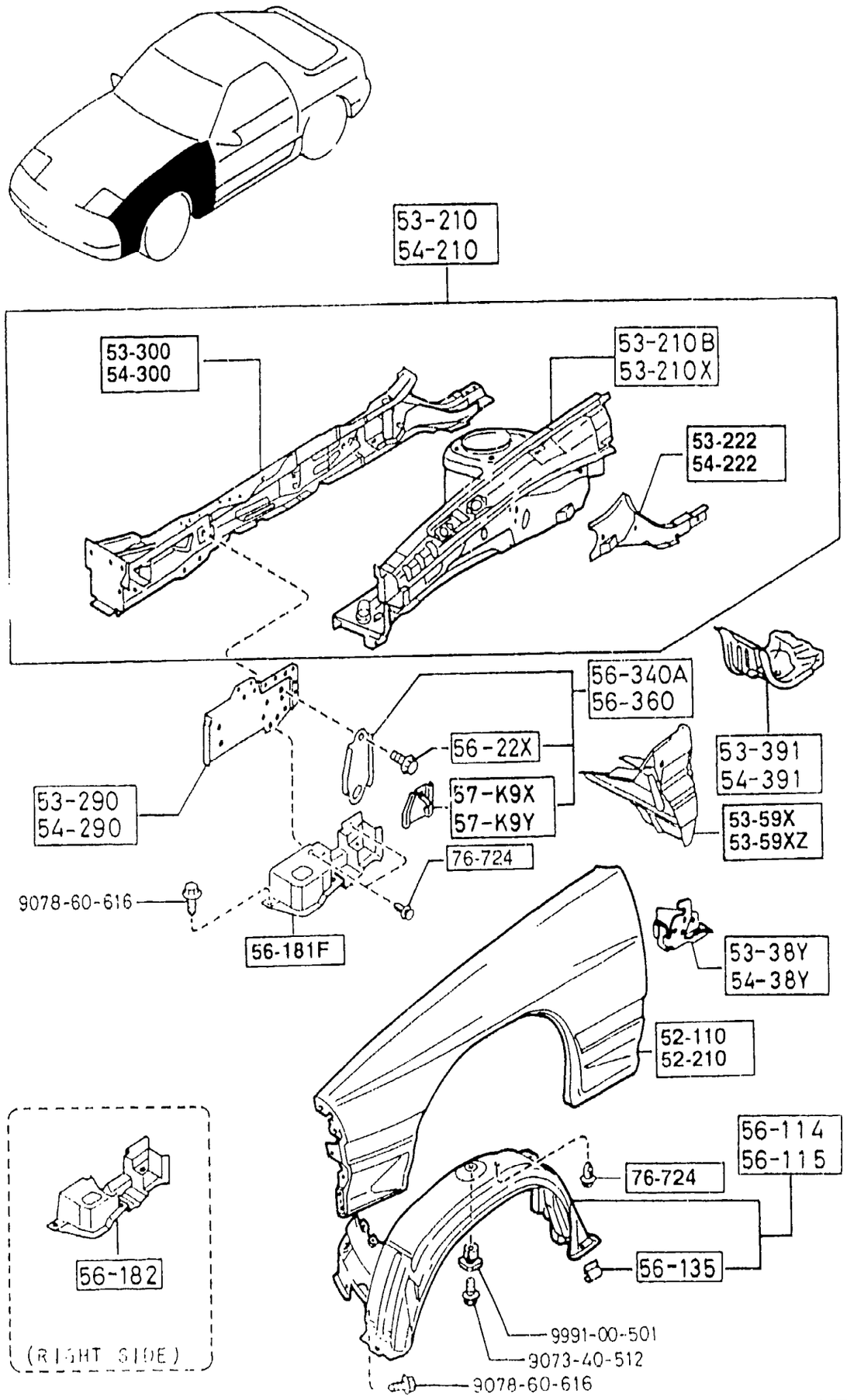




| PART NO. | QTY | MODEL/ ESTRICTION | MODEL/RESTRICTION | MODEL/RESTRICTION | FROM-TO |
|---|---|---|---|---|---|
| 54-210 | | PANEL(L),WHEEL APRON | | | |
| FC66-54-200AN(FC66-54-200A) | 1 | | | | -0A01 |
| FC66-54-200A | 1 | | | | 0A01- |
| 54-222 | | PLATE(RR.,L),CLOSING | | | |
| FB01-54-250A | 1 | | | | |
| 54-290 | | PLATE(F.,L),CLOSING | | | |
| FC66-54-240C | 1 | | | | |
| 54-300 | | FRAME(L),SIDE-FRONT | | | |
| FC33-54-310A | 1 | | | | |
| 54-38Y | | BRACKET(L),CLOSING PLATE | | | |
| FB67-54-38YC | 1 | | | | |
| 54-391 | | BOX(L),TORQUE | | | |
| FB67-54-391A | 1 | | | | |
| 56-114 | | GUARD(R),MUD | | | |
| FC66-56-130 | 1 | | | | |
| 56-115 | | GUARD(L),MUD | | | |
| FC66-56-140 | 1 | | | | |
| 56-135 | | RUBBER,STOP | | | |
| 8173-56-135 | 10 | | | | |
| 56-181F | | PLATE(L),SEAL-CLOSING | | | |
| FB01-56-181A | 1 | | | | |
| 56-182 | | PLATE(R),SEAL-CLOSING | | | |
| FB01-56-182A | 1 | | | | |
| 56-22X | | BOLT,TIE DOWN HOOK-FRONT | | | |
| FB01-56-22X | 6 | | | | |
| 56-340A | | HOOK(R),TIE DOWN-FRONT | | | |
| FC66-56-220A | 1 | | | | |

0A01 FC3***-902450

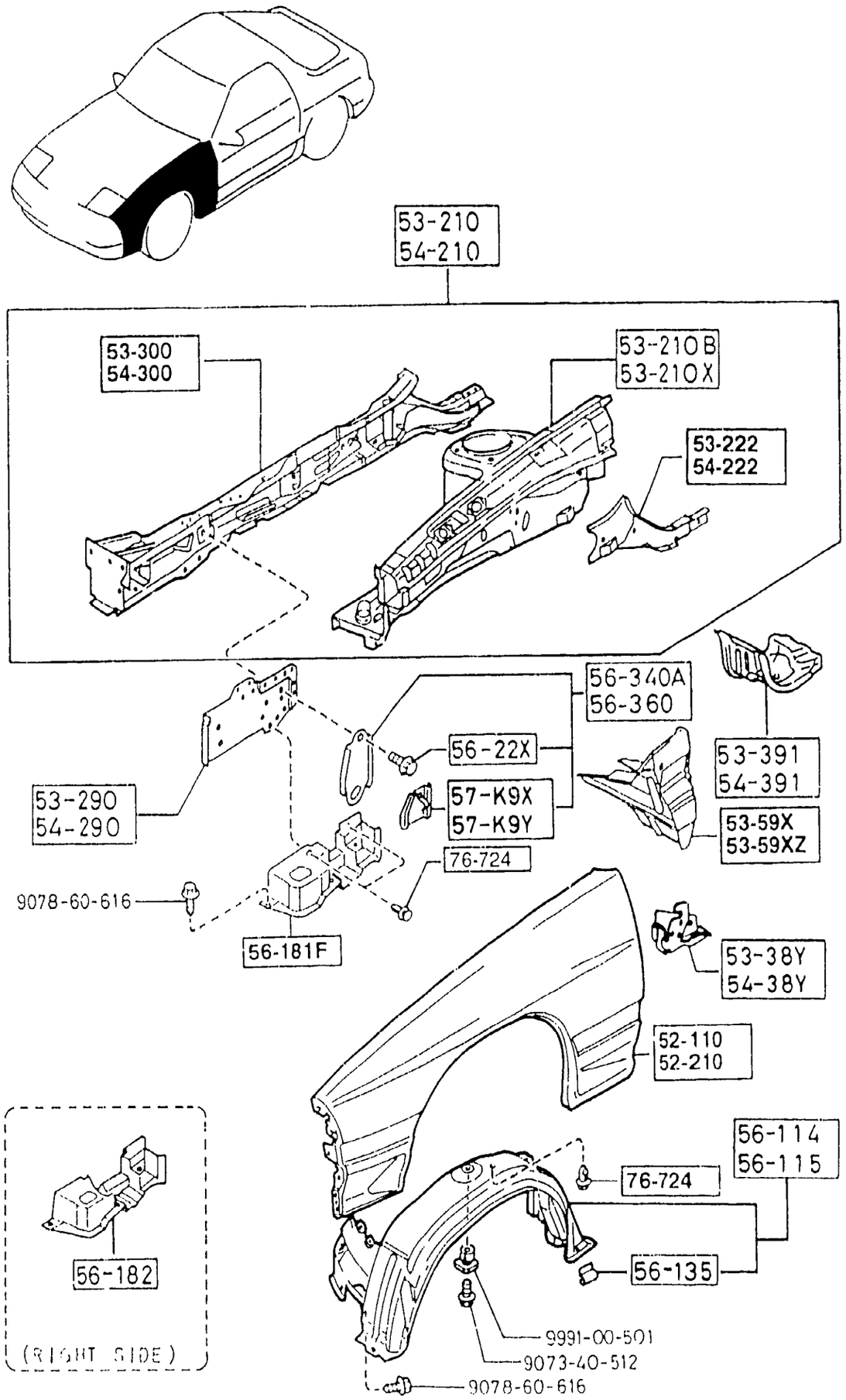




| PART NO. | QTY | MODEL/RESTRICTION | MODEL/RESTRICTION | MODEL/RESTRICTION | FROM-TO |
|---|---|---|---|---|---|
| 56-360 | | HOOK(L),TIE DOWN-FRONT | | | |
| FC66-56-230A | 1 | | | | |
| 57-K9X | | PROTECTOR(R),AIR BAG | | | |
| FC66-57-K9XB | 1 | | | | |
| 57-K9Y | | PROTECTOR(L),AIR BAG | | | |
| FC66-57-K9YB | 1 | | | | |
| 76-724 | | RIVET | | | |
| *B092-51-833 | 6 | | | | |

## 5330 DASH & COWL PANELS

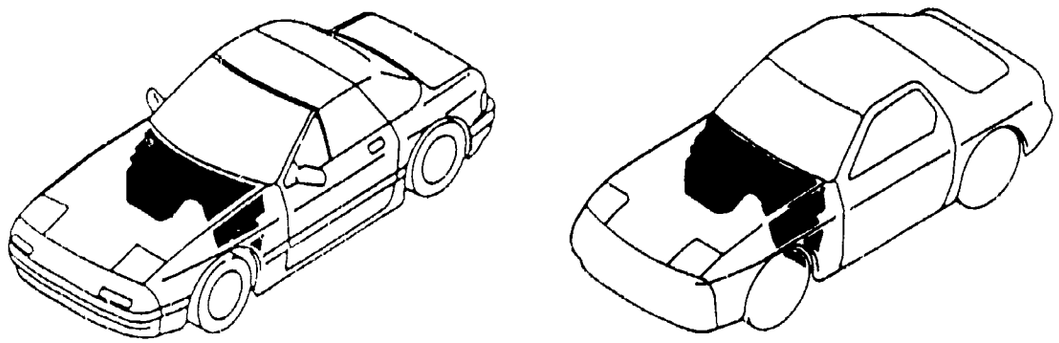

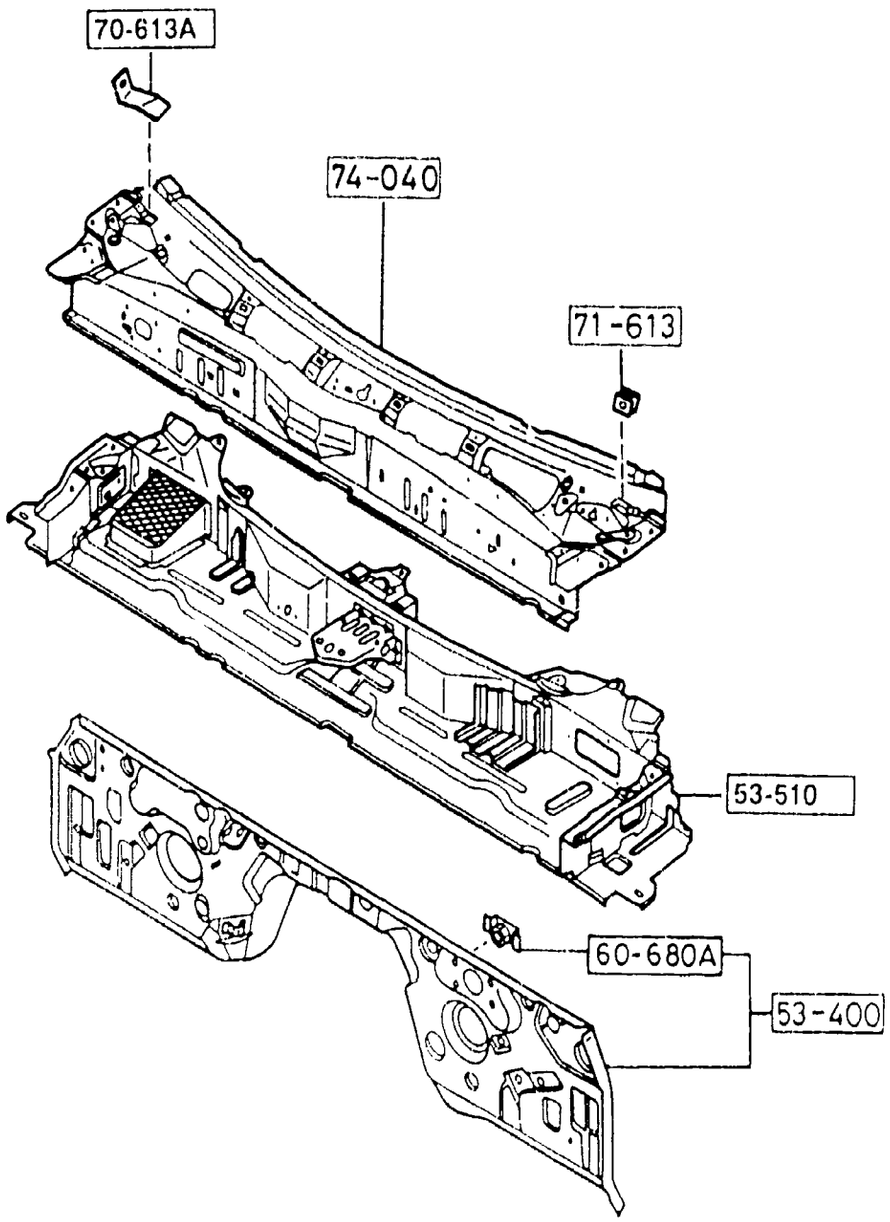


| PART NO. | QTY | MODEL/RESTRICTION | MODEL/RESTRICTION | MODEL/RESTRICTION | FROM-TO |
|---|---|---|---|---|---|
| 53-400 | | PANEL,DASH-LOWER | | | |
| FB01-54-400H | 1 | ((CPE))(W/O TURBO) ) | | | |
| FB55-54-400D | 1 | ((CPE))(TURBO) ) | | | |
| FB67-54-400E | 1 | (CONVERTIBLE) | | | |
| 53-510 | | PANEL,DASH-UPPER | | | |
| FB01-53-510C | 1 | (CPE) | | | |
| FC66-53-510 | 1 | (CONVERTIBLE) | | | |
| 60-680A | | BRACKET,FLOOR | | | |
| 0305-53-160 | 2 | | | | |
| 70-613A | | BRKT(R),PILLAR GARNISH | | | |
| FB01-70-613B | 1 | | | | |
| 71-613 | | BRKT(L),PILLAR GARNISH | | | |
| FB01-71-613B | 1 | | | | |
| 74-040 | | PANEL,COWL | | | |
| FB01-70-610L | 1 | (CPE) | | | |
| FB67-70-610E | 1 | (CONVERTIBLE) | | | |

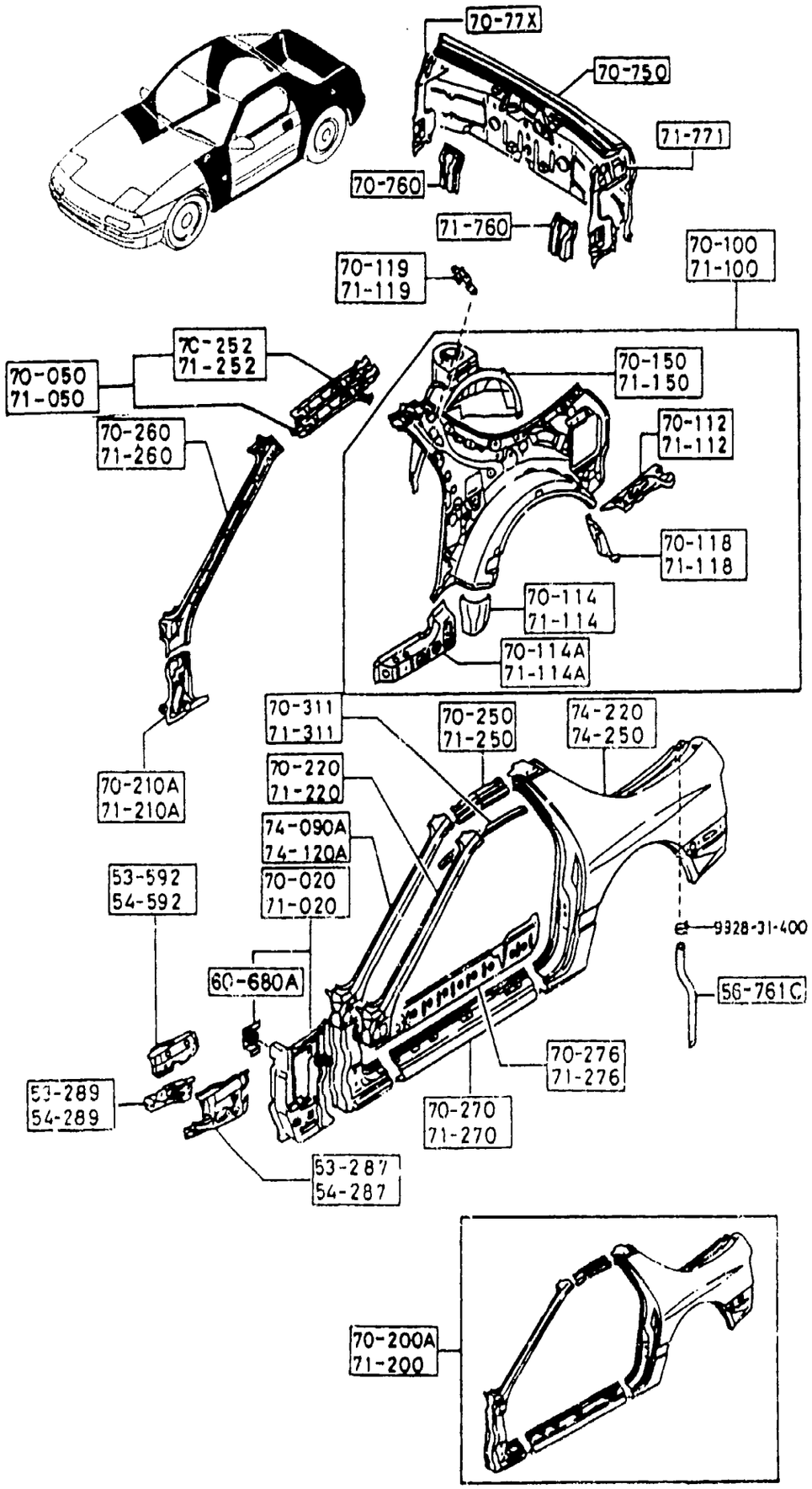




| PART NO. | QTY | MODEL/RESTRICTION | MODEL/RESTRICTION | MODEL/RESTRICTION | FROM-TO |
|---|---|---|---|---|---|
| 53-287<br>FB01-53-287A | 1 | REINF.(R),COWL SIDE PANEL | | | |
| 53-289<br>FB01-53-289 | 1 | REINF.(R),COWL SIDE-INNER | | | |
| 53-592<br>FB01-53-592B | 1 | PLATE(UP,R),COWL SIDE-OU | | | |
| 54-287<br>FB01-54-287A | 1 | REINF.(L),COWL SIDE PANEL | | | |
| 54-289<br>FB01-54-289 | 1 | REINF.(L),COWL SIDE-INNER | | | |
| 54-592<br>FB01-54-592B | 1 | PLATE(UP,L),COWL SIDE-OU | | | |
| 56-761C<br>FB01-56-761 | 2 | PIPE,DRAIN-RR FENDER | | | |
| 60-680A<br>0305-53-160 | 1 | BRACKET,FLOOR | | | |
| 70-020<br>FB01-70-210E | 1 | PANEL(R),COWL SIDE | | | |
| 70-050<br>FC01-70-050 | 1 | RAIL(R),ROOF-INNER (W/O SUN-RF) | | | |
| FC03-70-050 | 1 | (SUNROOF) | | | |
| 70-100<br>FC01-70-100C | 1 | PANEL(R),QUARTER | | | |
| 70-112<br>FB01-70-112A | 1 | PANEL(RR ,R),QUARTER-LOW. | | | |
| 70-114<br>FC01-70-113 | 1 | PLATE(R),END | | | |

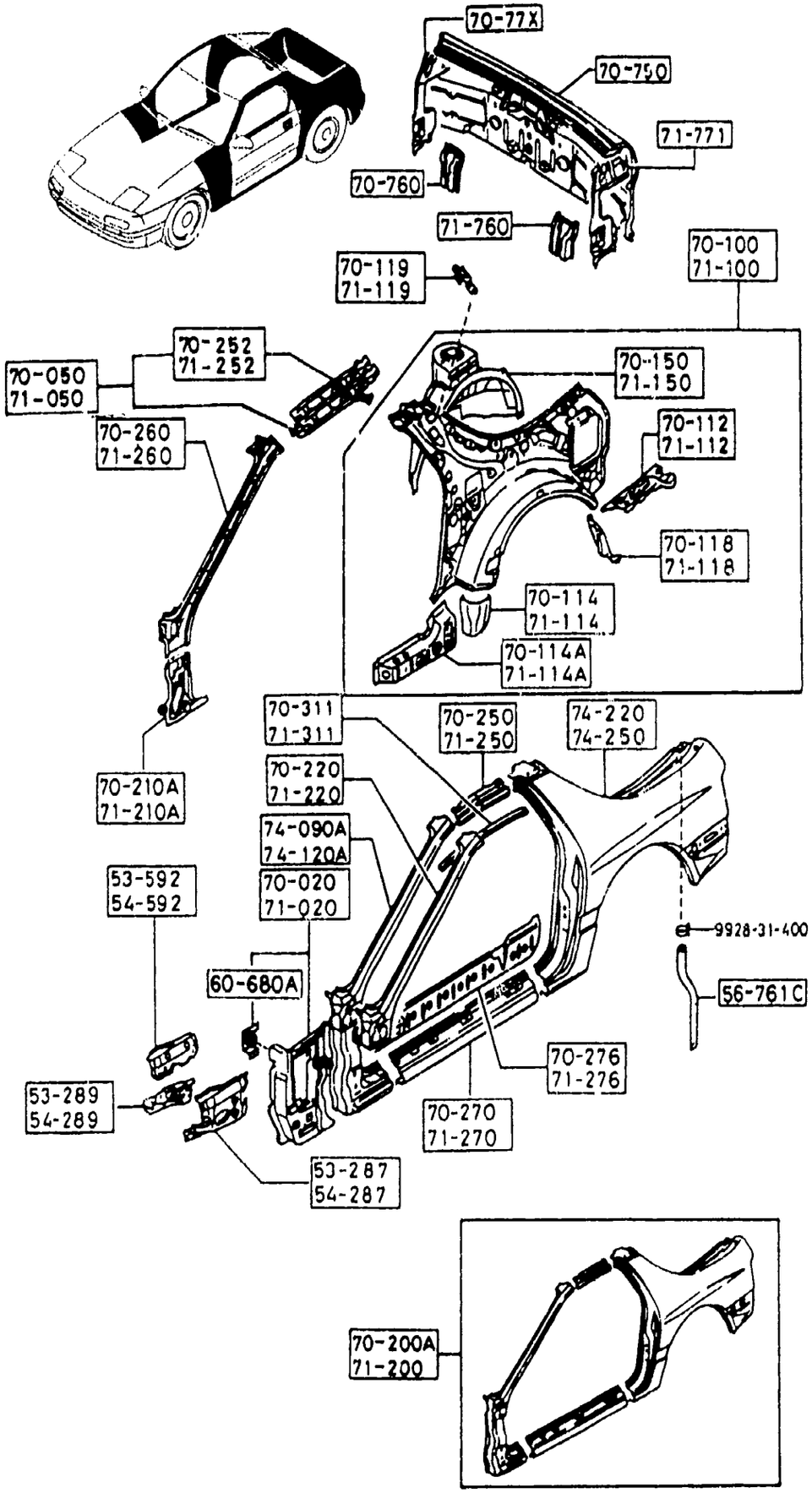




| PART NO. | QTY | MODEL/RESTRICTION | MODEL/RESTRICTION | MODEL/RESTRICTION | FROM-TO |
|---|---|---|---|---|---|
| 70-114A | | JUNCTION(R),CORNER-Q/PANE | | | |
| FB01-70-114A | 1 | | | | |
| 70-118 | | PROTECTOR(R),SPLASH | | | |
| FB01-70-118A | 1 | | | | |
| 70-119 | | BRKT(R),TRIM-QTR PANEL | | | |
| FB01-70-119A | 1 | | | | |
| 70-150 | | PANEL(R),WHEEL HOUSE | | | |
| FC01-70-150B | 1 | | | | |
| 70-200A | | FRAME(R),SIDE-OUTER | | | |
| FCY1-70-200A | 1 | | | | -0C11 |
| AN(FCY1-70-200B) | | | | | |
| FCY1-70-200B | 1 | | | | 0C11- |
| 70-210A | | PILLAR(R),HINGE | | | |
| FB01-70-020 | 1 | | | | |
| 70-220 | | PILLAR(R,UP.),FRONT- | | | |
| FB01-70-220D | 1 | | | | |
| 70-250 | | RAIL(R),ROOF-OUTER | | | |
| FBY1-70-251 | 1 | | | | -0C11 |
| AN(FBY1-70-251A) | | | | | |
| FBY1-70-251A | 1 | | | | 0C11- |
| 70-252 | | REINF.(R),ROOF RAIL | | | |
| FC01-70-052 | 1 | | | | |
| 70-260 | | PILLAR(R),FRT.-INNER | | | |
| FC01-70-240B | 1 | | | | |
| 70-270 | | PANEL(R),SIDE SILL | | | |
| FCY1-70-271A | 1 | | | | -0C11 |
| AN(FCY1-70-271B) | | | | | |
| FCY1-70-271B | 1 | | | | 0C11- |
| 70-276 | | REINF.(R),SIDE SILL | | | |
| FB01-70-273 | 1 | | | | |

0C11 FC3***-904567

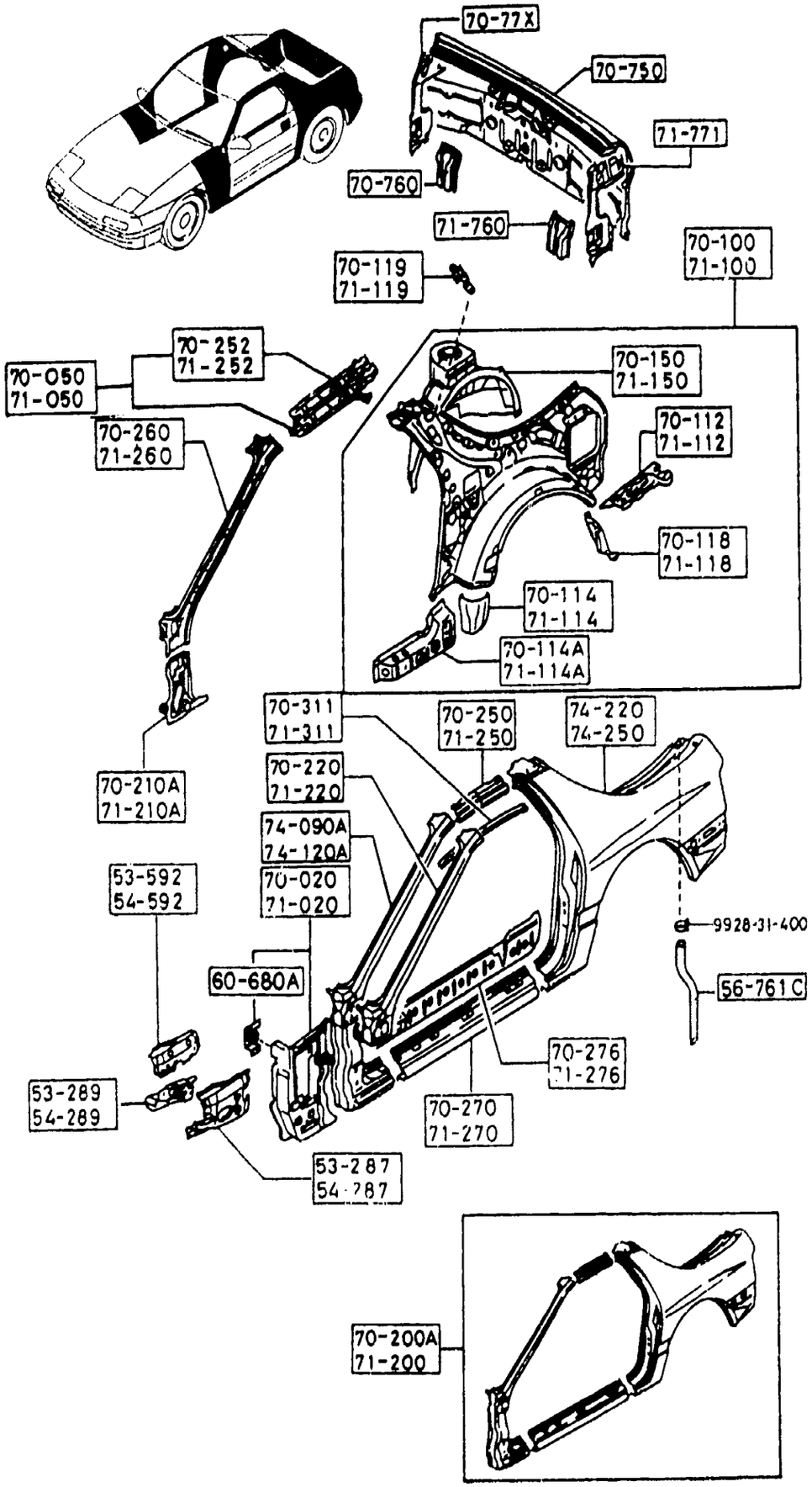




| PART NO. | QTY | MODEL/RESTRICTION | MODEL/RESTRICTION | MODEL/RESTRICTION | FROM-TO |
|---|---|---|---|---|---|
| 70-311 | | RAIL(R),RAIN | | | |
| FB01-70-321A | 1 | | | | |
| 70-750 | | PANEL,REAR END | | | |
| FC01-70-75X | 1 | | | | |
| 70-760 | | TOWER(R),LOCK-RR END PANEL | | | |
| FB01-70-760C | 1 | | | | |
| 70-77X | | PANEL(R),QTR-REAR END | | | |
| FB01-70-77X | 1 | | | | |
| 71-020 | | PANEL(L),COWL SIDE | | | |
| FB01-71-210F | 1 | | | | |
| 71-050 | | RAIL(L),ROOF-INNER | | | |
| FC01-71-050 | 1 | (W/O SUN-RF) | | | |
| FC03-71-050 | 1 | (SUN&COF) | | | |
| 71-100 | | PANEL(L),QUARTER | | | |
| FC01-71-100C | 1 | | | | |
| 71-112 | | PANEL(RR ,L),QUARTER -LOW. | | | |
| FB01-71-112D | 1 | | | | |
| 71-114 | | PLATE(L),END | | | |
| FC01-71-113 | 1 | | | | |
| 71-114A | | JUNCTION(L),CORNER-Q /PANE | | | |
| FB01-71-114A | 1 | | | | |
| 71-118 | | PROTECTOR(L),SPLASH | | | |
| FB01-71-118A | 1 | | | | |
| 71-119 | | BRKT(L),TRIM-QTR PANEL | | | |
| FB01-71-119A | 1 | | | | |
| 71-150 | | PANEL(L),WHEEL HOUSE | | | |
| FC01-71-150B | 1 | | | | |

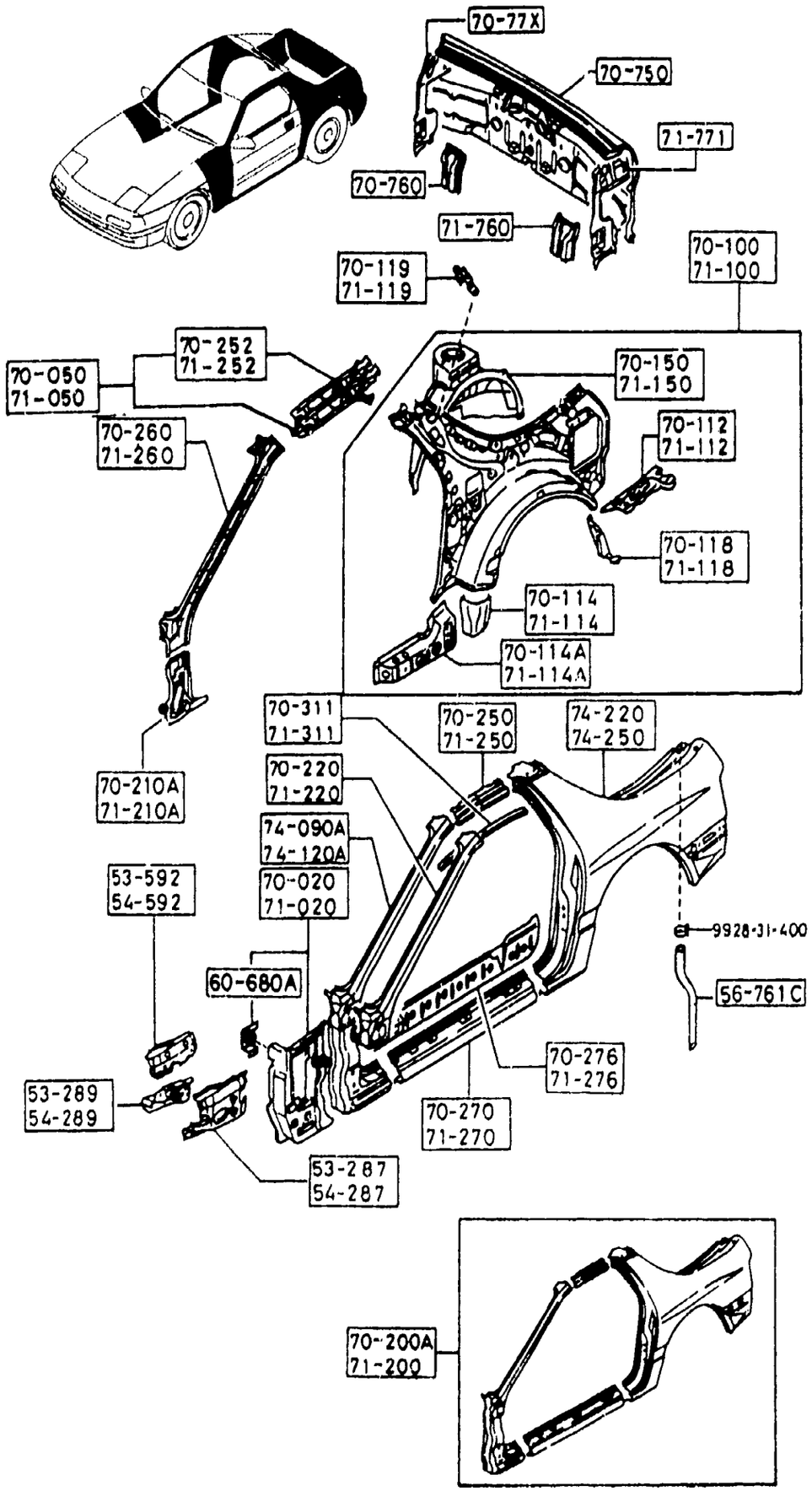







| PART NO. | QTY | MODEL/RESTRICTION | MODEL/RESTRICTION | MODEL/RESTRICTION | FROM-TO |
|---|---|---|---|---|---|
| +---------+ \| 71-200 \| +---------+ | | FRAME(L),SIDE-OUTER | | | |
| FCY1-71-200A AN(FCY1-71-200B) | 1 | | | | -0C11 |
| FCY1-71-200B | 1 | | | | 0C11- |
| +---------+ \| 71-210A \| +---------+ | | PILLAR(L),HINGE | | | |
| FB01-71-020 | 1 | | | | |
| +---------+ \| 71-220 \| +---------+ | | PILLAR(L,UP.),FRONT- | | | |
| FB01-71-220D | 1 | | | | |
| +---------+ \| 71-250 \| +---------+ | | RAIL(L),ROOF-OUTER | | | |
| FBY1-71-251 AN(FBY1-71-251A) | 1 | | | | -0C11 |
| FBY1-71-251A | 1 | | | | 0C11- |
| +---------+ \| 71-252 \| +---------+ | | REINF.(L),ROOF RAIL | | | |
| FC01-71-052 | 1 | | | | |
| +---------+ \| 71-260 \| +---------+ | | PILLAR(L),FRT.-INNER | | | |
| FC01-71-240B | 1 | | | | |
| +---------+ \| 71-270 \| +---------+ | | PANEL(L),SIDE SILL | | | |
| FCY1-71-271A AN(FCY1-71-271B) | 1 | | | | -0C11 |
| FCY1-71-271B | 1 | | | | 0C11- |
| +---------+ \| 71-276 \| +---------+ | | REINF.(L),SIDE SILL | | | |
| FB01-71-273 | 1 | | | | |
| +---------+ \| 71-311 \| +---------+ | | RAIL(L),RAIN | | | |
| FB01-71-321A | 1 | | | | |
| +---------+ \| 71-760 \| +---------+ | | TOWER(L),LOCK-RR END PANEL | | | |
| FB01-71-760B | 1 | | | | |
| +---------+ \| 71-771 \| +---------+ | | PANEL(L),QTR-REAR END | | | |
| FB01-71-771A | 1 | | | | |
| +---------+ \| 74-090A \| +---------+ | | PILLAR(R),FRONT-OUT. | | | |
| FBY1-70-210C AN(FBY1-70-210D) | 1 | | | | -0C11 |

0C11 FC3***-904567

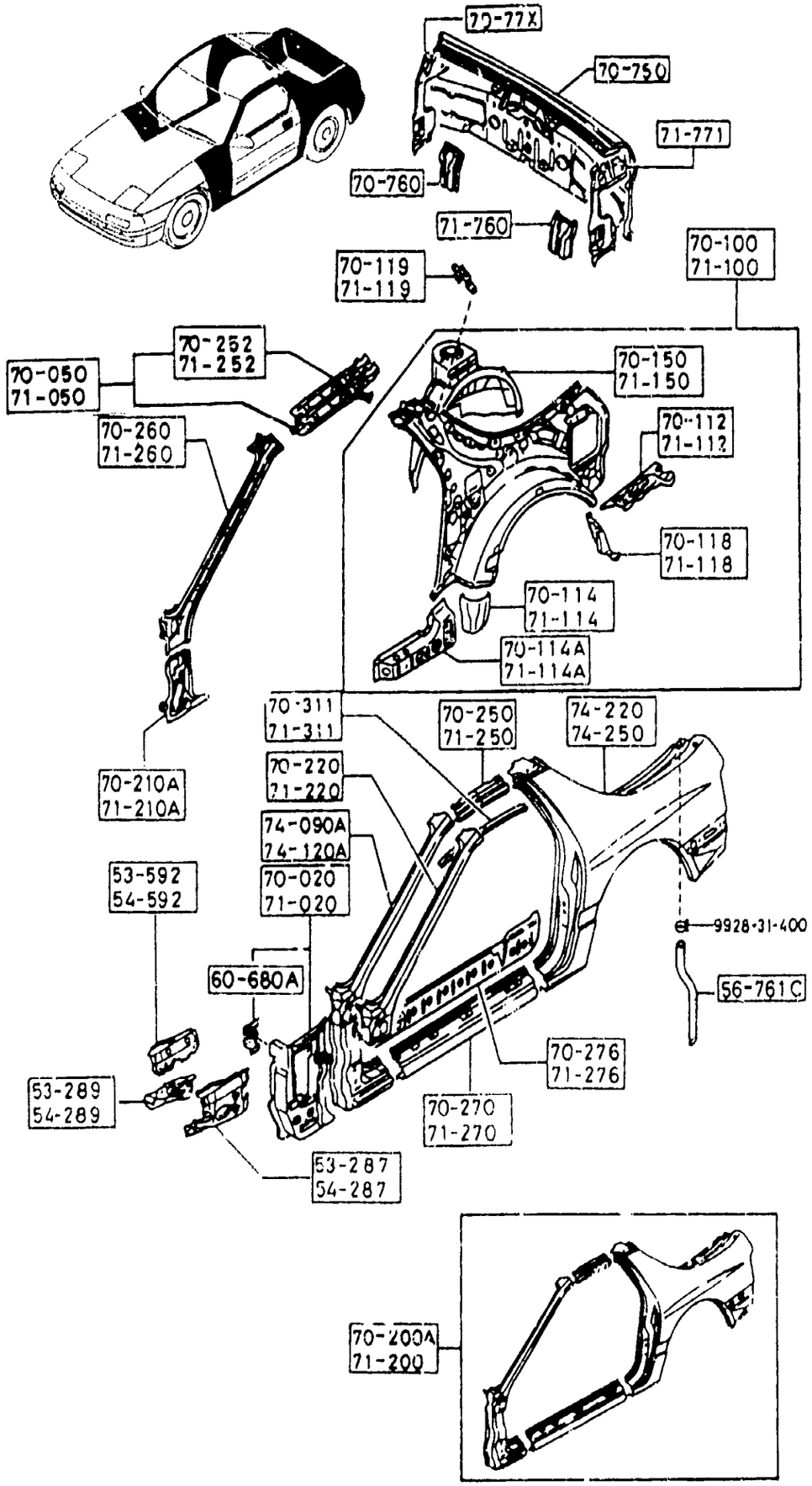




| PART NO. | QTY | MODEL/RESTRICTION | MODEL/RESTRICTION | MODEL/RESTRICTION | FROM-TO |
|---|---|---|---|---|---|
| CONT'D | | | | | |
| FBY1-70-210D | 1 | | | | 0C11- |
| +----------+ | | | | | |
| \| 74-120A \| | | PILLAR(L),FRONT-OUT. | | | |
| +----------+ | | | | | |
| FBY1-71-210C | 1 | | | | -0C11 |
| AN(FBY1-71-210D) | | | | | |
| FBY1-71-210D | 1 | | | | 0C11- |
| +----------+ | | | | | |
| \| 74-220 \| | | PANEL(R),FENDER-REAR | | | |
| +----------+ | | | | | |
| FCY1-70-400 | 1 | | | | -0C11 |
| AN(FCY1-70-400A) | | | | | |
| FCY1-70-400A | 1 | | | | 0C11- |
| +----------+ | | | | | |
| \| 74-250 \| | | PANEL(L),FENDER-REAR | | | |
| +----------+ | | | | | |
| FCY1-71-400 | 1 | | | | -0C11 |
| AN(FCY1-71-400A) | | | | | |
| FCY1-71-400A | 1 | | | | 0C11- |

0C11 FC3***-904567

5340A SIDE PANELS (CONVERTIBLE)

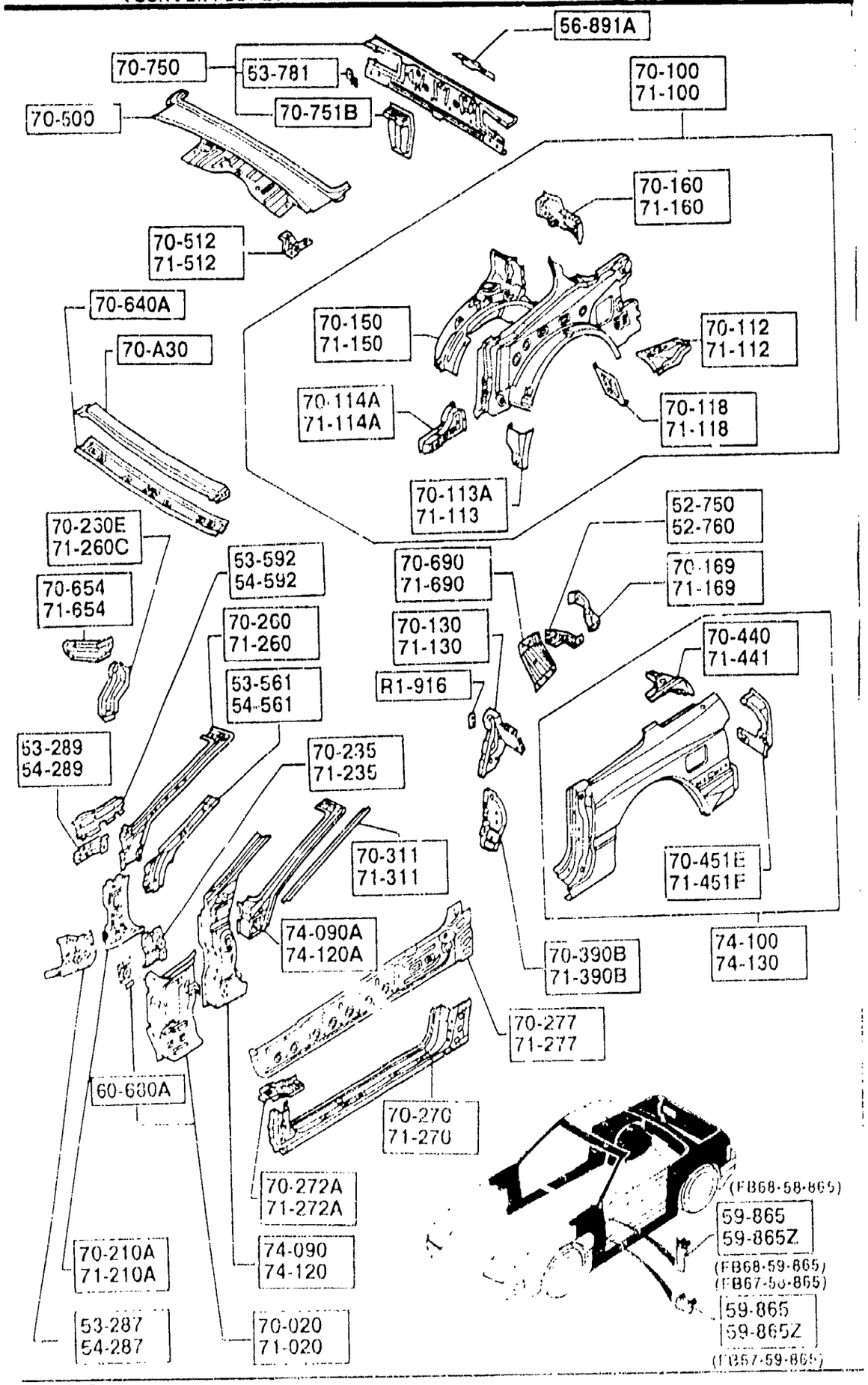


AUFA03

5340A -1 SIDE PANELS (CONVERTIBLE)

| PART NO. | QTY | MODEL/RESTRICTION | MODEL/RESTRICTION | MODEL/RESTRICTION | FROM-TO |
|---|---|---|---|---|---|
| R1-916 | | PLATE,SET-HINGE BRACKET | | | |
| FB67-R1-916 | 2 | | | | |
| 52-750 | | BRKT(R),DAMPER STAY-QTR | | | |
| FB67-52-750 | 1 | | | | |
| 52-760 | | BRKT(L),DAMPER STAY-QTR | | | |
| FB67-52-760 | 1 | | | | |
| 53-287 | | REINF.(R),COWL SIDE PANEL | | | |
| FB67-53-287 | 1 | | | | |
| 53-289 | | REINF.(R),COWL SIDE-INNER | | | |
| FB01-53-289 | 1 | | | | |
| 53-561 | | REINF.(R),F. PILLAR INNER | | | |
| FB67-70-246B | 1 | | | | |
| 53-592 | | PLATE(UP,R),COWL SIDE-OU | | | |
| FB67-53-592 | 1 | | | | |
| 53-781 | | BRACKET,GRILLE-C | | | |
| 0305-53-781A | 4 | | | | |
| 54-287 | | REINF.(L),COWL SIDE PANEL | | | |
| FB67-54-287 | 1 | | | | |
| 54-289 | | REINF.(L),COWL SIDE-INNER | | | |
| FB01-54-289 | 1 | | | | |
| 54-561 | | REINF.(L),F. PILLAR INNER | | | |
| FB67-71-246B | 1 | | | | |
| 54-592 | | PLATE(UP,L),COWL SIDE-OU | | | |
| FB67-54-592 | 1 | | | | |
| 56-891A | | REINF.LOCK-R.END PANEL | | | |
| FB67-56-890 | 1 | | | | |
| 59-865 | | VALVE(R),SHUTTER | | | |
| FB67-58-865 | 1 | | | | |

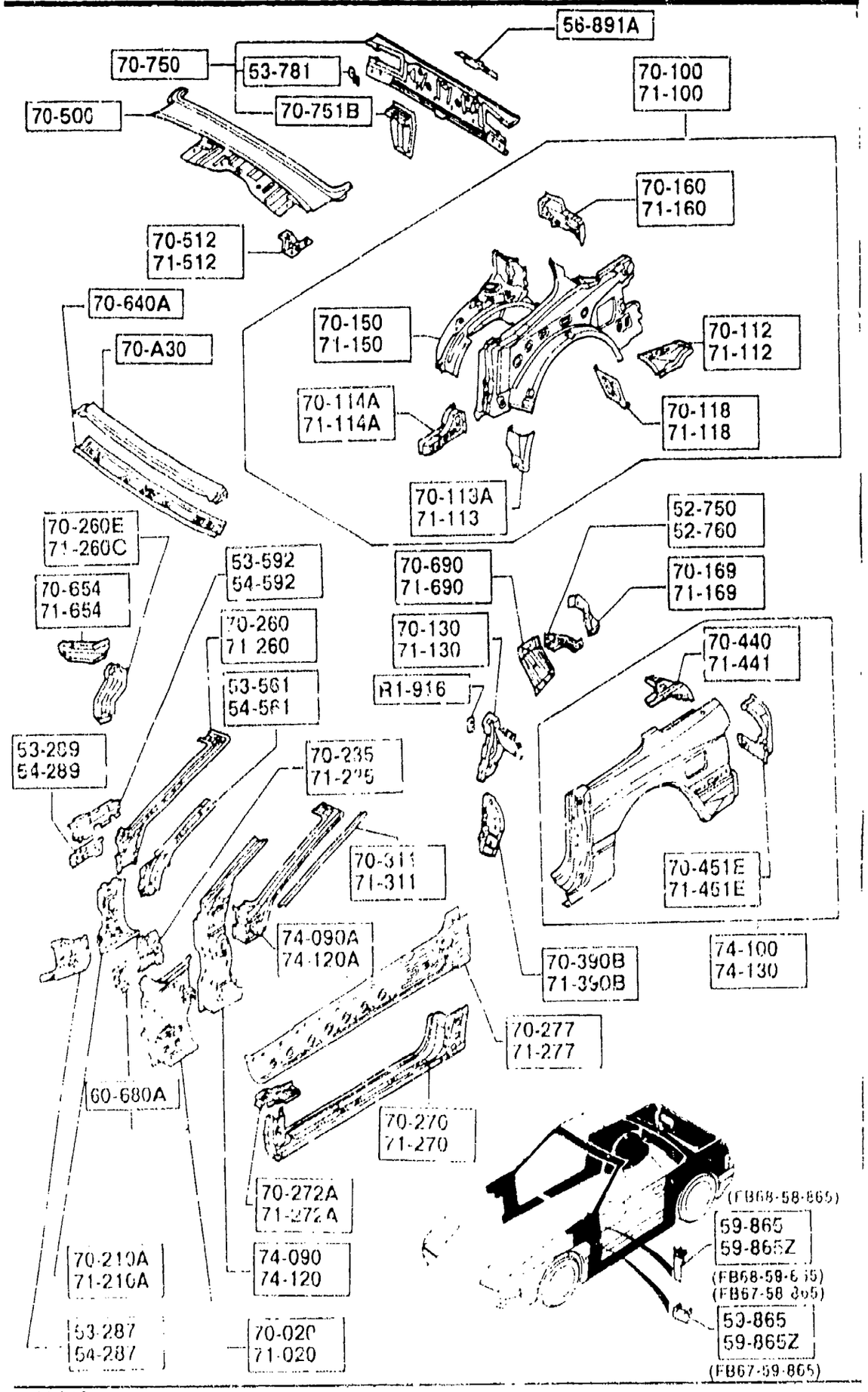






| PART NO. | QTY | MODEL/RESTRICTION | MODEL/RESTRICTION | MODEL/RESTRICTION | FROM-TO |
|---|---|---|---|---|---|
| CONT'D | | | | | |
| FB68-58-865 | 1 | | | | |
| 59-865Z | | VALVE(L),SHUTTER | | | |
| FB67-59-865 | 1 | | | | |
| FB68-59-865 | 1 | | | | |
| 60-680A | | BRACKET,FLOOR | | | |
| 0305-53-160 | 1 | | | | |
| 70-A30 | | HEADER,FRONT-OUTER | | | |
| FB67-70-631B | 1 | | | | |
| 70-020 | | PANEL(R),COWL SIDE | | | |
| FB67-70-230C | 1 | | | | |
| 70-100 | | PANEL(R),QUARTER | | | |
| FC33-70-100A | 1 | | | | |
| 70-112 | | PANEL(RR ,R),QUARTER -LOW. | | | |
| FB01-70-112A | 1 | | | | |
| 70-113A | | PLATE(R),SEAL | | | |
| FB67-70-113 | 1 | | | | |
| 70-114A | | JUNCTION(R),CORNER-Q /PANE | | | |
| FB67-70-114 | 1 | | | | |
| 70-118 | | PROTECTOR(R),SPLASH | | | |
| FB01-70-118A | 1 | | | | |
| 70-130 | | BRKT(R),FORMING BAR | | | |
| FB67-70-130D | 1 | | | | |
| 70-150 | | PANEL(R),WHEEL HOUSE | | | |
| FB67-70-150D | 1 | | | | |
| 70-160 | | PLATE(R),REAR CORNER -IN. | | | |
| FB67-70-160B | 1 | | | | |
| 70-169 | | REINF.(R),QTR PANEL-REAR | | | |
| FB67-70-169A | 1 | | | | |

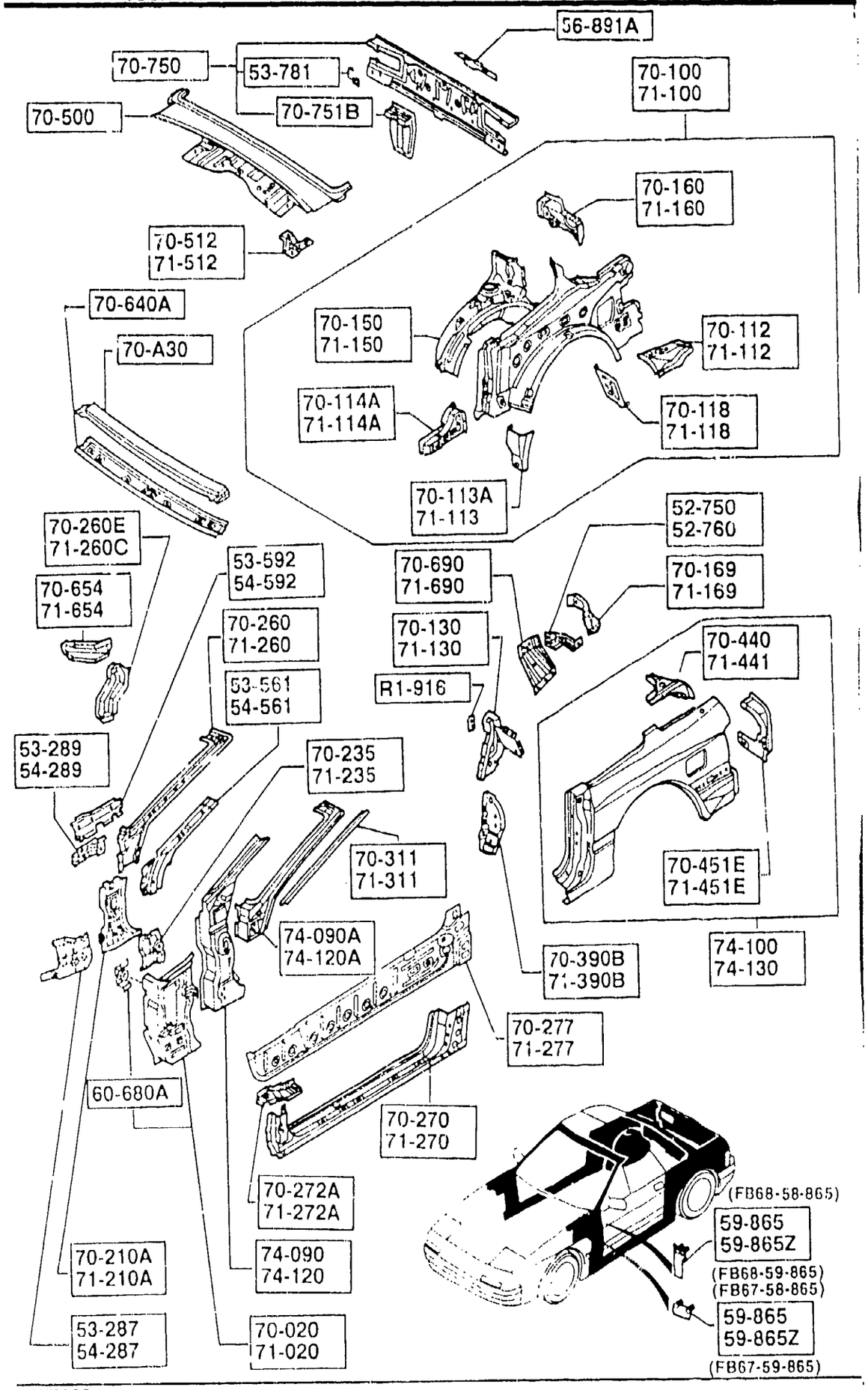


AUFA03



| PART NO. | QTY | MODEL/RESTRICTION | MODEL/RESTRICTION | MODEL/RESTRICTION | FROM-TO |
|---|---|---|---|---|---|
| 70-210A | | PILLAR(R),HINGE | | | |
| FB67-70-020C | 1 | | | | |
| 70-235 | | GUSSET(R),HINGE PILLAR | | | |
| FB67-53-698 | 1 | | | | |
| 70-260 | | PILLAR(R),FRT.-INNER | | | |
| FB67-70-240B | 1 | | | | |
| 70-260E | | BRKT(R),INST. | | | |
| FB67-70-260 | 1 | | | | |
| 70-270 | | PANEL(R),SIDE SILL | | | |
| FC33-70-270 | 1 | ('91 MODEL) | | | |
| *FC89-70-270 | 1 | ('92 MODEL) | | | |
| 70-272A | | PLATE(R),FIXING-SIDE SILL | | | |
| FB67-70-272 | 1 | | | | |
| 70-277 | | REINF.(R),SIDE SILL | | | |
| FC33-53-790 | 1 | | | | |
| 70-311 | | RAIL(R),RAIN | | | |
| FB67-70-222A | 1 | | | | |
| 70-390B | | REINF.(R),STRIKER | | | |
| FB67-70-420 | 1 | | | | |
| 70-440 | | PLATE(R),CORNER | | | |
| FB67-70-441A | 1 | | | | |
| 70-451E | | HOUSING(R),LAMP-RR FENDER | | | |
| FB67-70-491A | 1 | | | | |
| 70-500 | | TRAY,PACKAGE | | | |
| FB67-70-500D | 1 | | | | |
| 70-512 | | BRACKET(R),TRIM-QTR PANEL | | | |
| FB67-70-512 | 1 | | | | |

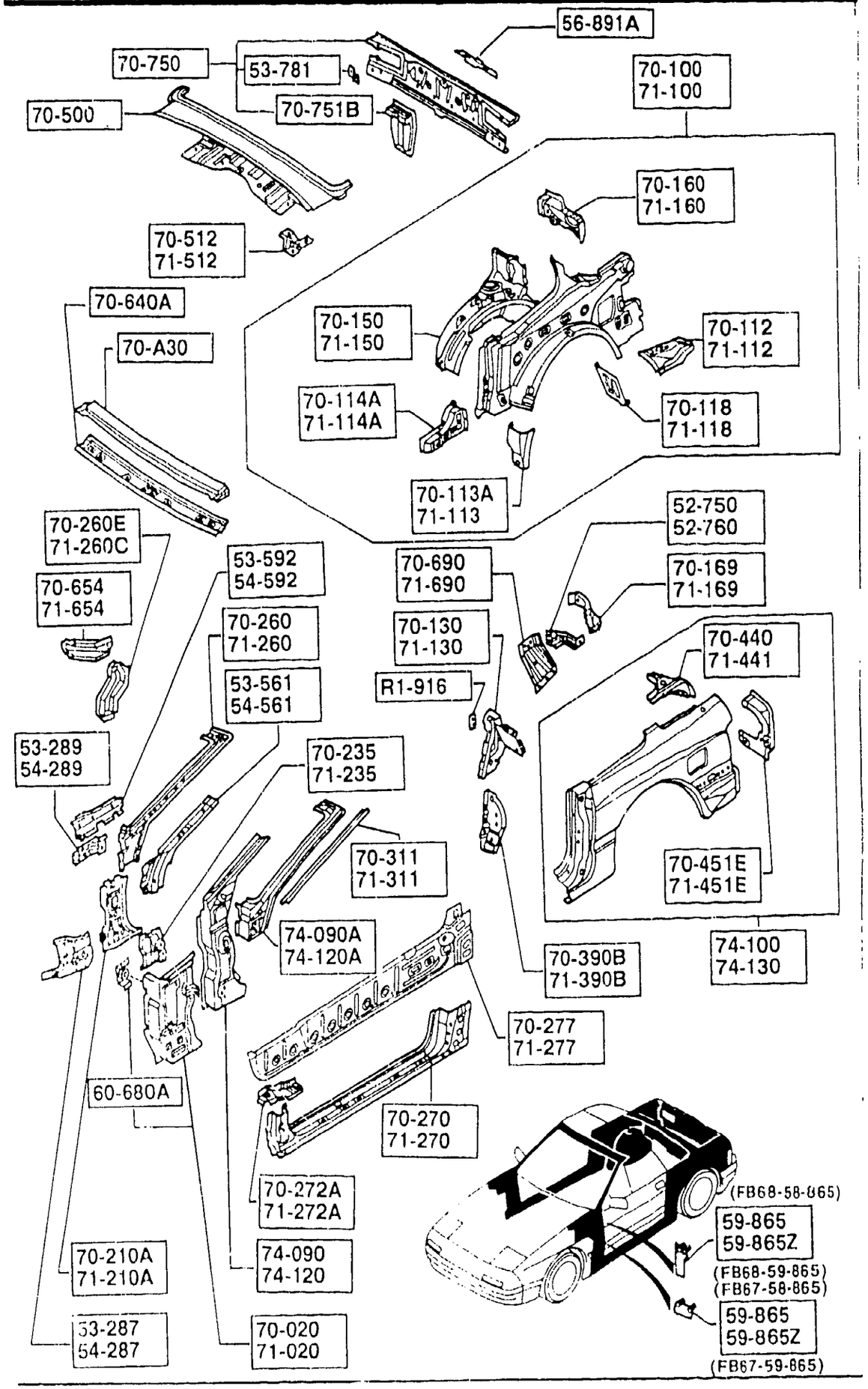


AUFA03



| PART NO. | QTY | MODEL/RESTRICTION | MODEL/RESTRICTION | MODEL/RESTRICTION | FROM-TO |
|---|---|---|---|---|---|
| 70-640A<br>FB67-70-640A | 1 | HEADER,FRONT-INNER | | | |
| 70-654<br>FB67-70-654 | 1 | GUSSET(L),INST.PANEL -DASH | | | |
| 70-690<br>FB67-70-690A | 1 | GUSSET(R),WHEEL HOUS E | | | |
| 70-750<br>FC33-70-750A | 1 | PANEL,REAR END | | | |
| 70-751B<br>FB67-70-752 | 1 | MEMBER,REAR END | | | |
| 71-020<br>FB67-71-230C | 1 | PANEL(L),COWL SIDE | | | |
| 71-100<br>FC33-71-100A | 1 | PANEL(L),QUARTER | | | |
| 71-112<br>FB01-71-112D | 1 | PANEL(RR ,L),QUARTER -LOW. | | | |
| 71-113<br>FB67-71-113 | 1 | PLATE(L),SEAL | | | |
| 71-114A<br>FB67-71-114 | 1 | JUNCTION(L),CORNER-Q /PANE | | | |
| 71-118<br>FB01-71-118A | 1 | PROTECTOR(L),SPLASH | | | |
| 71-130<br>FB67-71-130D | 1 | BRKT(L),FORMING BAR | | | |
| 71-150<br>FB67-71-150D | 1 | PANEL(L),WHEEL HOUSE | | | |
| 71-160<br>FB67-71-160B | 1 | PLATE(L),REAR CORNER -IN. | | | |

CAT. AUFA03-07

1993-12

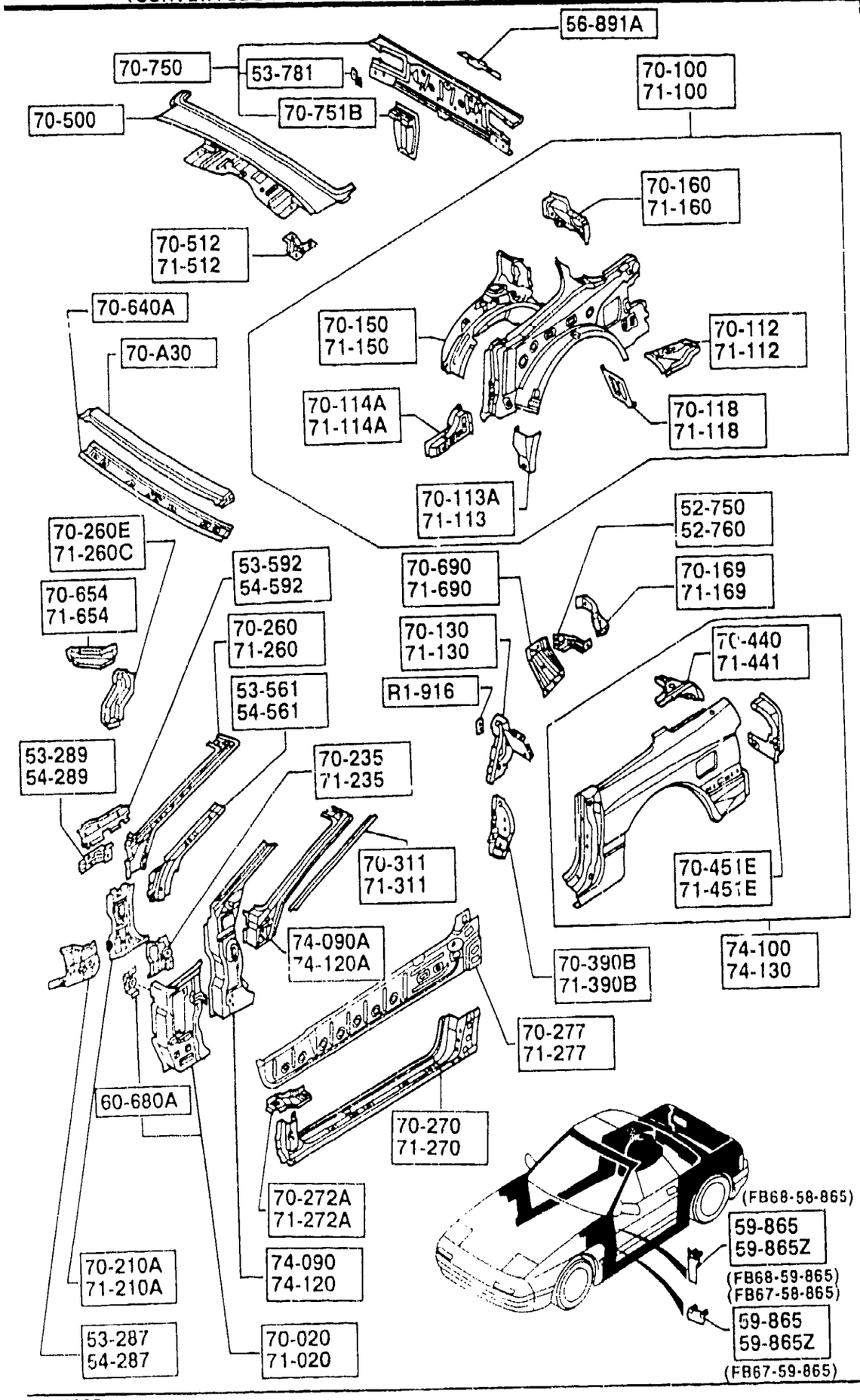


AUFA03



| PART NO. | QTY | MODEL/RESTRICTION | MODEL/RESTRICTION | MODEL/RESTRICTION | FROM-TO |
|---|---|---|---|---|---|
| 71-169 | | REINF.(L),QTR PANEL-REAR | | | |
| FB67-71-169A | 1 | | | | |
| 71-210A | | PILLAR(L),HINGE | | | |
| FB67-71-020C | 1 | | | | |
| 71-235 | | GUSSET(L),HINGE PILLAR | | | |
| FB67-54-698 | 1 | | | | |
| 71-260 | | PILLAR(L),FRT.-INNER | | | |
| FB67-71-240B | 1 | | | | |
| 71-260C | | BRKT(L),INST. | | | |
| FB67-71-260 | 1 | | | | |
| 71-270 | | PANEL(L),SIDE SILL | | | |
| FC33-71-270 | 1 | ('91 MODEL) | | | |
| *FC89-71-270 | 1 | ('92 MODEL) | | | |
| 71-272A | | PLATE(L),FIXING-SIDE SILL | | | |
| FB67-71-272 | 1 | | | | |
| 71-277 | | REINF.(L),SIDE SILL | | | |
| FC33-54-790 | 1 | | | | |
| 71-311 | | RAIL(L),RAIN | | | |
| FB67-71-222A | 1 | | | | |
| 71-390B | | REINF.(L),STRIKER | | | |
| FB67-71-420 | 1 | | | | |
| 71-441 | | PLATE(L),CORNER | | | |
| FB67-71-441A | 1 | | | | |
| 71-451E | | HOUSING(L),LAMP-RR FENDER | | | |
| FB67-71-491A | 1 | | | | |
| 71-512 | | BRACKET(L),TRIM-QTR PANEL | | | |
| FB67-71-512 | 1 | | | | |

CAT. AUFA03-07

1993-12

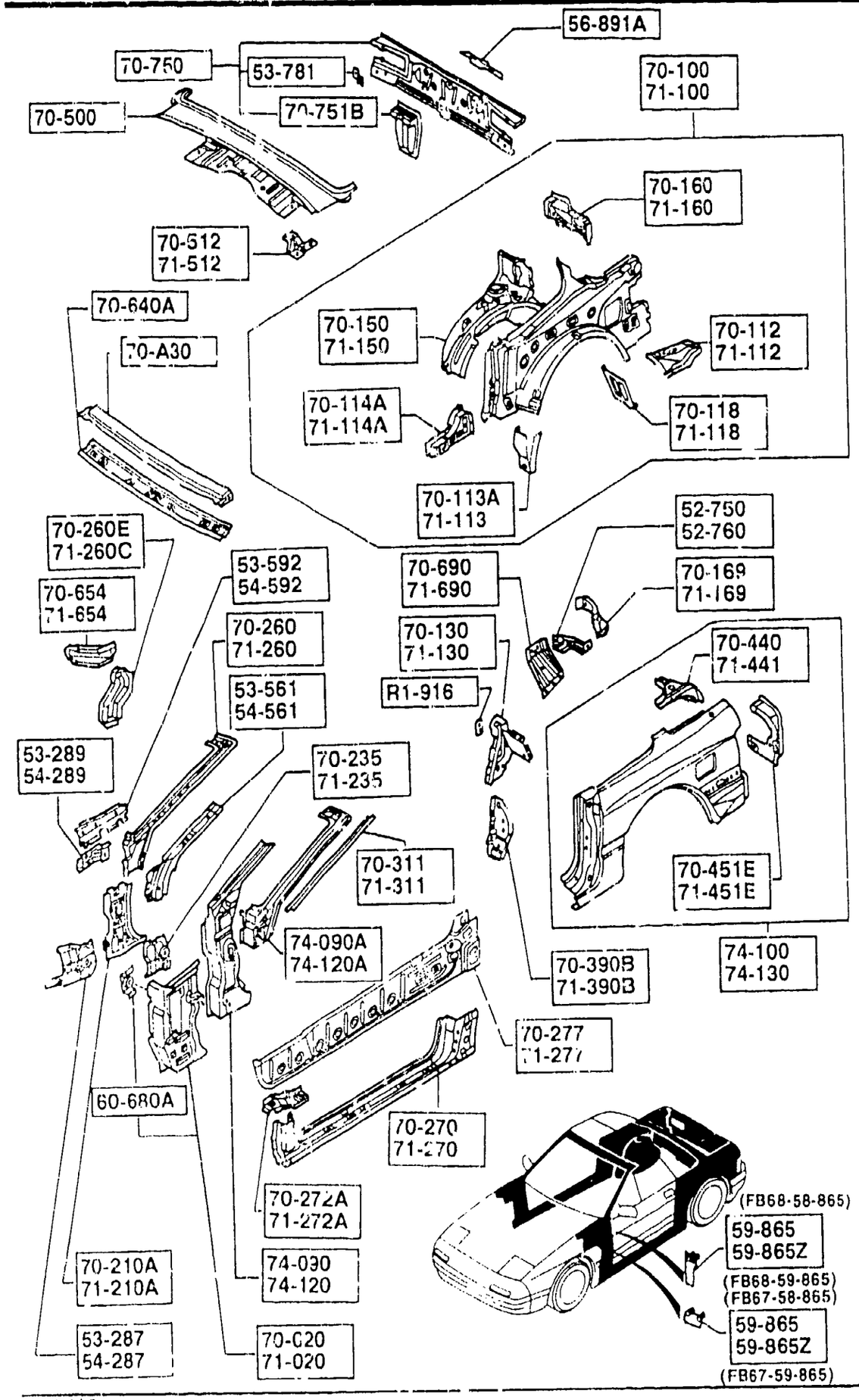


AUFA03

5340A -6 * SIDE PANELS
(CONVERTIBLE)

| PART NO. | QTY | MODEL/RESTRICTION | MODEL/RESTRICTION | MODEL/RESTRICTION | FROM-TO |
|---|---|---|---|---|---|
| 71-654<br>FB67-71-654 | 1 | GUSSET(L),INST.PANEL -DASH | | | |
| 71-690<br>FB67-71-690A | 1 | GUSSET(L),WHEEL HOUS E | | | |
| 74-090<br>FB67-70-210A | 1 | PILLAR(R),HINGE-OUT. | | | |
| 74-090A<br>FB67-70-220C | 1 | PILLAR(R),FRONT-OUT. | | | |
| 74-100<br>FC33-70-400 | 1 | PANEL(R),FENDER-REAR ('91 MODEL) | | | |
| *FC89-70-400 | 1 | ('92 MODEL) | | | |
| 74-120<br>FB67-71-210A | 1 | PILLAR(L),HINGE-OUT. | | | |
| 74-120A<br>FB67-71-220C | 1 | PILLAR(L),FRONT-OUT. | | | |
| 74-130<br>FC33-71-400 | 1 | PANEL(L),FENDER-REAR ('91 MODEL) | | | |
| *FC89-71-400 | 1 | ('92 MODEL) | | | |

CAT. AUFA03-07

1993-12

(W/O SUN-RF)

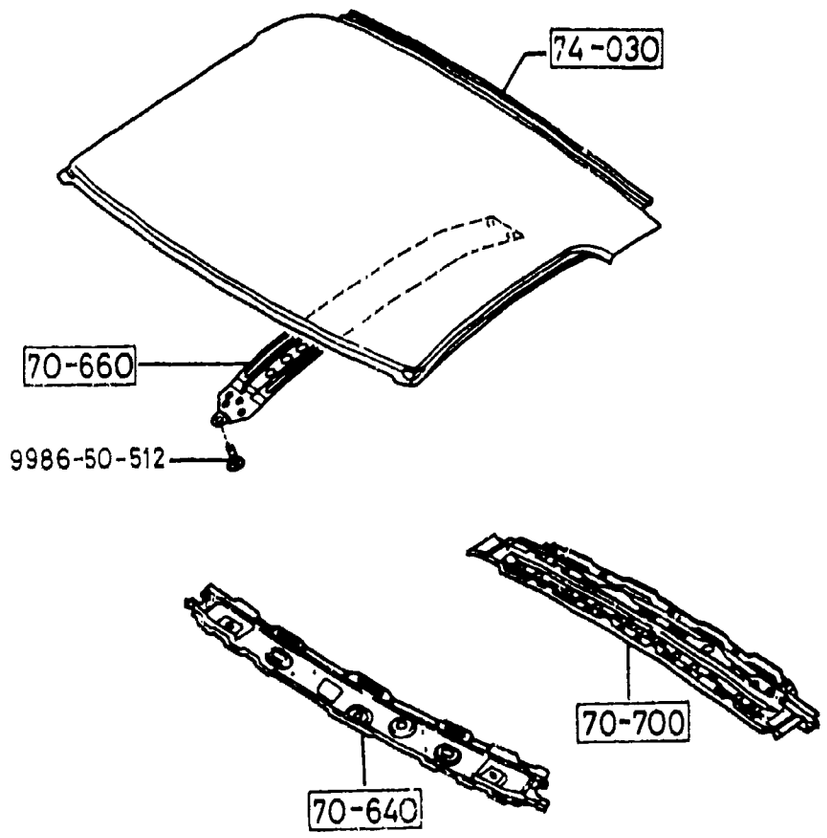


(SUNROOF)

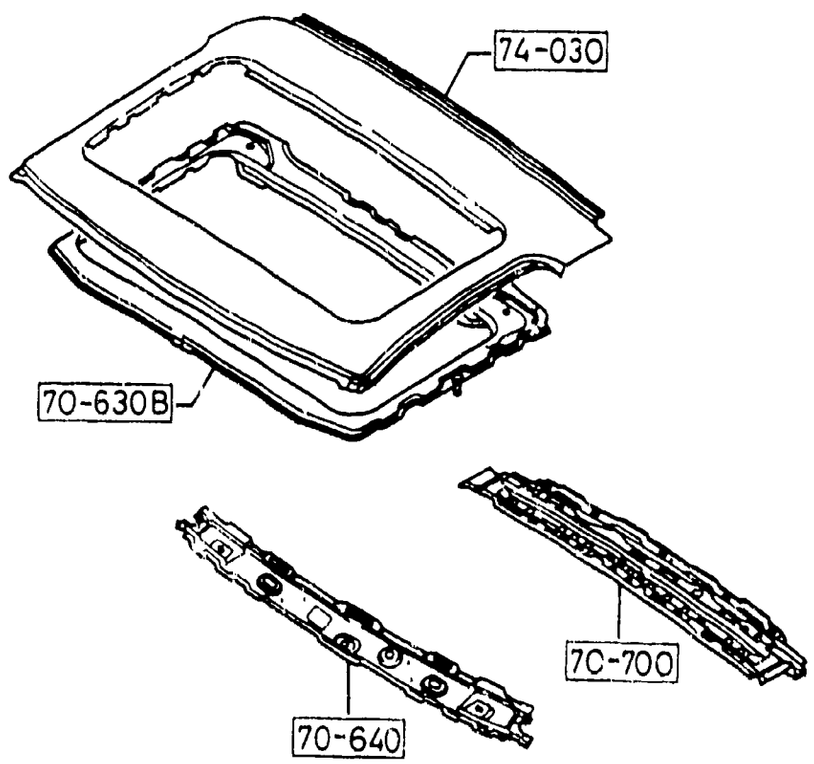


AUFA03

5360 -1 * ROOF PANELS
(COUPE)

| PART NO. | QTY | MODEL/RESTRICTION | MODEL/RESTRICTION | MODEL/RESTRICTION | FROM-TO |
|---|---|---|---|---|---|
| 70-630B | | PLATE,FIXING | | | |
| FB03-70-630E | 1 | (SUNROOF) | | | |
| 70-640 | | HEADER,FRONT | | | |
| FB01-70-640A | 1 | | | | |
| 70-660 | | REINFORCEMENT,ROOF | | | |
| FB01-70-609A | 1 | (W/O SUN-RF) | | | |
| 70-700 | | HEADER,REAR | | | |
| FC01-70-700 | 1 | | | | |
| 74-030 | | PANEL,ROOF | | | |
| FC01-70-601 | 1 | (W/O SUN-RF) | | | |
| FC03-70-601 | 1 | (SUNROOF) | | | |

CAT. AUFA03-07

1993-12

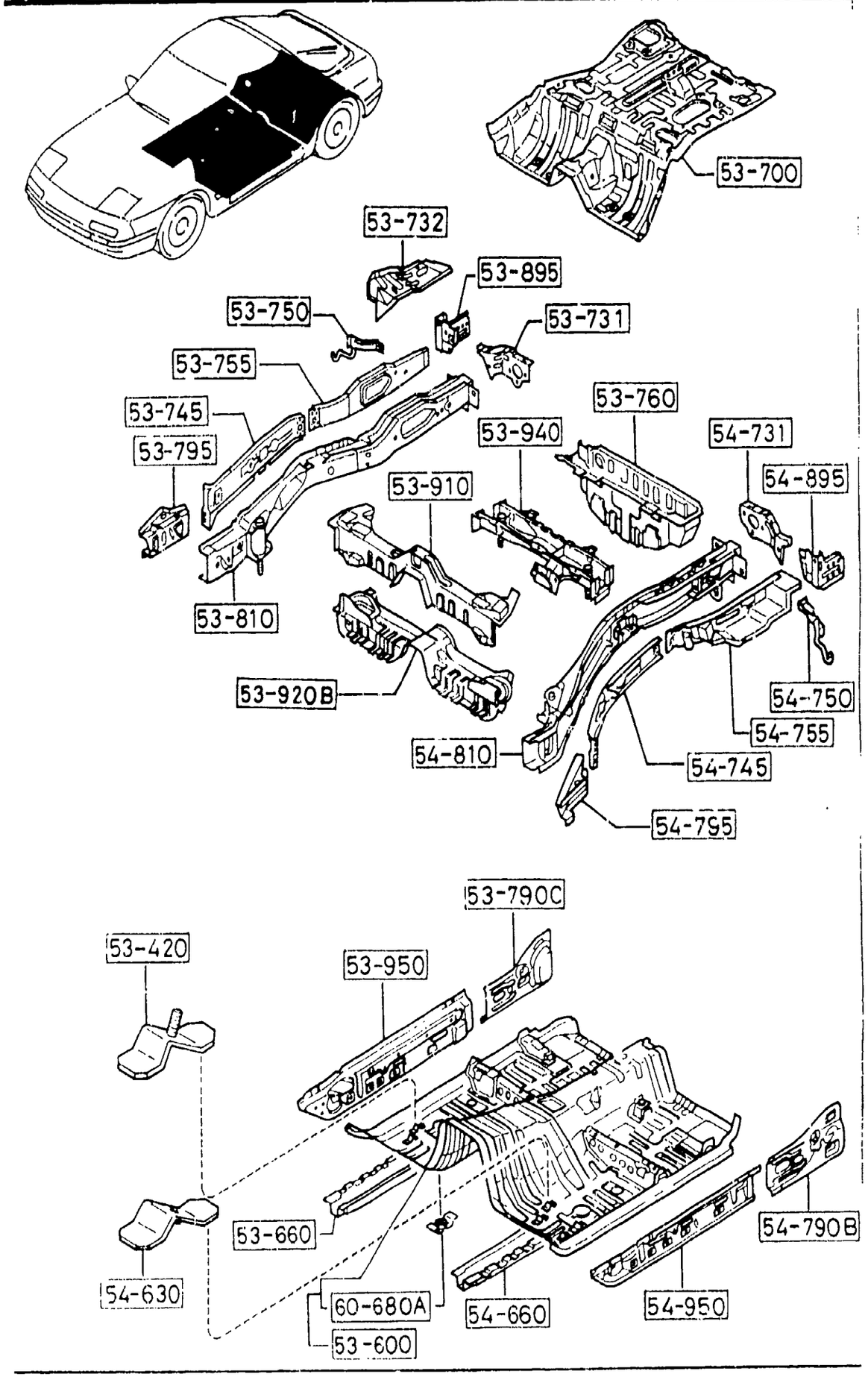


AUFA03



| PART NO. | QTY | MODEL/RESTRICTION | MODEL/RESTRICTION | MODEL/RESTRICTION | FROM-TO |
|---|---|---|---|---|---|
| 53-420 | | BRKT'A',CONTROL UNIT | | | |
| FB01-53-685 | 2 | | | | |
| 53-600 | | PAN,FLOOR-FRONT | | | |
| FC01-53-600 | 1 | (MT) | | | |
| FC07-53-600 | 1 | (AT) | | | |
| 53-660 | | FRAME(RR.R),FRONT | | | |
| FC01-53-660 | 1 | | | | |
| 53-700 | | PAN,FLOOR-REAR | | | |
| FC01-53-710A | 1 | | | | |
| 53-731 | | PLATE(R),SEAL-RR S/FRAME | | | |
| FB01-53-731B | 1 | | | | |
| 53-732 | | PANEL(R),SIDE-RR FLOOR | | | |
| FB01-53-732A | 1 | | | | |
| 53-745 | | PLATE'A'(R),CLOSING-FRT | | | |
| FC01-53-74X | 1 | | | | |
| 53-750 | | BRKT(R),SILENCER-S/PANEL | | | |
| FB01-53-750B | 1 | | | | |
| 53-755 | | PLATE'A'(R),CLOSING-RR | | | |
| FC01-53-75Y | 1 | | | | |
| 53-760 | | PAN,SPARE TIRE | | | |
| FB01-53-760H | 1 | | | | |
| 53-790C | | PLATE'B'(R),CLOSING-FRAME | | | |
| FC01-53-790 | 1 | | | | |
| 53-795 | | PLATE'C'(R),CLOSING-FRAME | | | |
| FB01-53-796 | 1 | | | | |
| 53-810 | | FRAME(R),REAR SIDE | | | |
| FC01-53-810 | 1 | | | | -0A01 |
| AN(FC01-53-810A) | | | | | |
| FC01-53-810A | 1 | | | | 0A01- |

0A01 FC3***-902450

CAT. AUFA03-07

1993 12

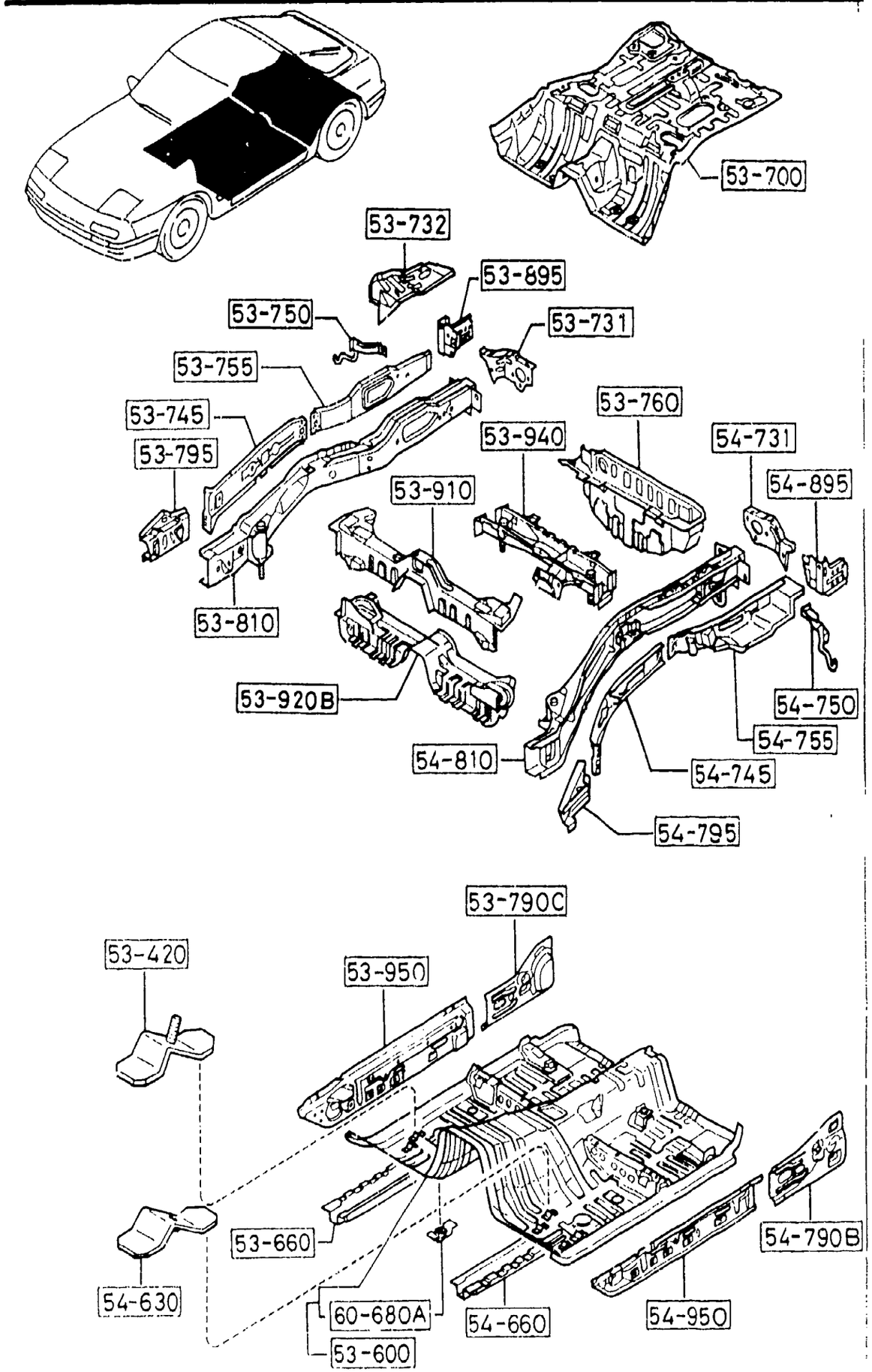




| PART NO. | QTY | MODEL/RESTRICTION | MODEL/RESTRICTION | MODEL/RESTRICTION | FROM-TO |
|---|---|---|---|---|---|
| 53-895<br>FB01-53-895B | 1 | GUSSET(R),LOCK TOWER | | | |
| 53-910<br>FC66-53-91X | 1 | MEMBER NO.3,CROSS-UPPER | | | |
| 53-920B<br>FC01-53-920 | 1 | MEMBER NO.3,CROSS-LOWER | | | |
| 53-940<br>FC01-53-930A | 1 | MEMBER NO.4,CROSS | | | |
| 53-950<br>FB01-53-951 | 1 | PANEL(R),SIDE SILL | | | |
| 54-630<br>FB01-54-685 | 2 | BRKT'B',CONTROL UNIT | | | |
| 54-660<br>FC01-54-660 | 1 | FRAME(RR.L),FRONT | | | |
| 54-731<br>FB01-54-731B | 1 | PLATE(L),SEAL-RR S/FRAME | | | |
| 54-745<br>FC01-54-74X | 1 | PLATE'A'(L),CLOSING-FRT | | | |
| 54-750<br>FB01-54-750B | 1 | BRKT(L),SILENCER-S/PANEL | | | |
| 54-755<br>FC01-54-75Y | 1 | PLATE'A'(L),CLOSING-RR | | | |
| 54-790B<br>FC01-54-790 | 1 | PLATE'B'(L),CLOSING-FRAME | | | |
| 54-795<br>FB01-54-796 | 1 | PLATE'C'(L),CLOSING-FRAME | | | |
| 54-810<br>FC01-54-810A | 1 | FRAME(L),REAR SIDE | | | -0A01 |

0A01 FC3***-902450

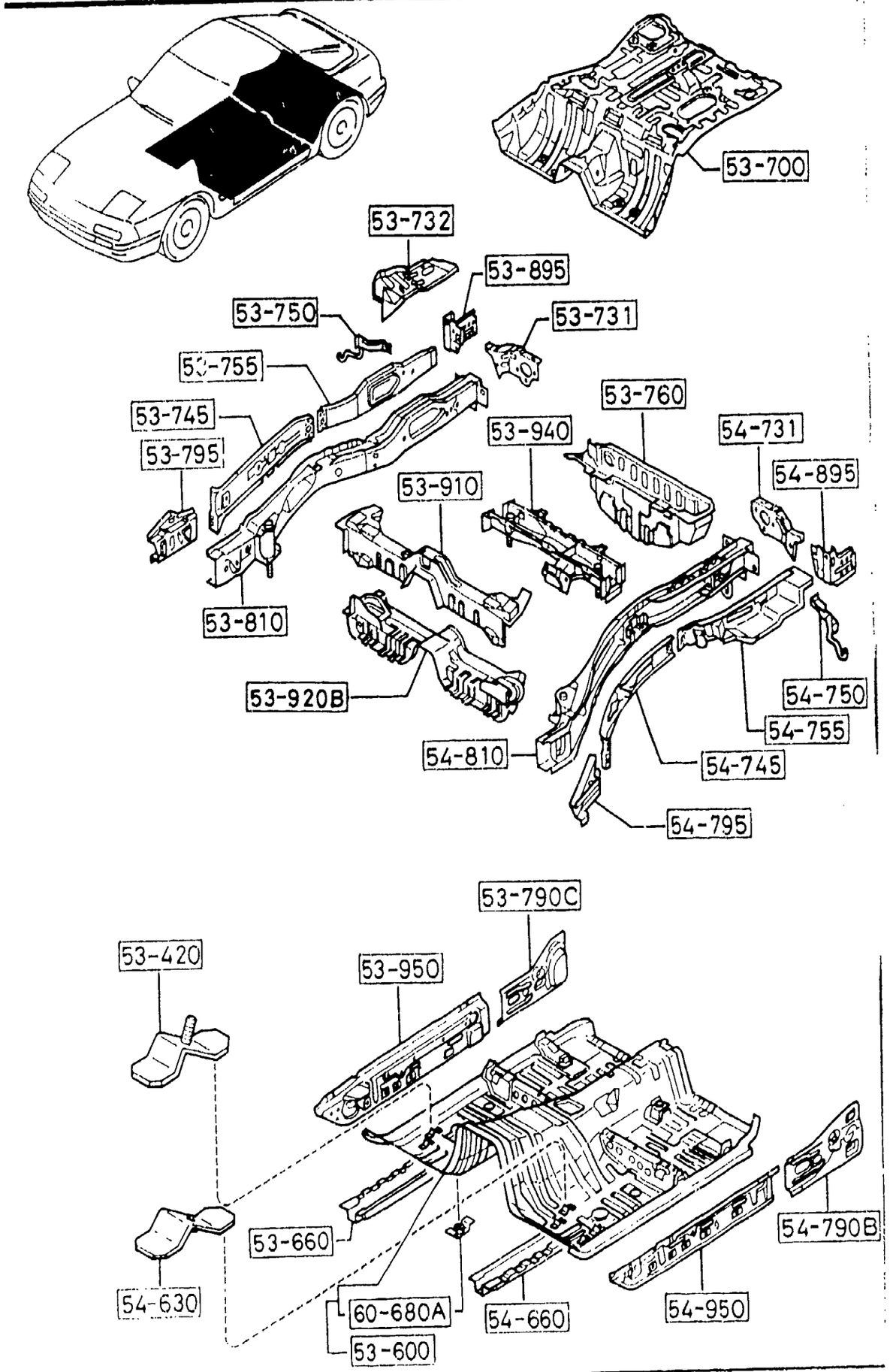




| PART NO. | QTY | MODEL/RESTRICTION | MODEL/RESTRICTION | MODEL/RESTRICTION | FROM-TO |
|---|---|---|---|---|---|
| CONT'D AN(FC01-54-810B) | | | | | |
| FC01-54-810B | 1 | | | | 0A01- |
| 54-895 | | GUSSET(L),LOCK TOWER | | | |
| FB01-54-895B | 1 | | | | |
| 54-950 | | PANEL(L),SIDE SEAL | | | |
| FB01-54-950 | 1 | | | | |
| 60-680A | | BRACKET,FLOOR | | | |
| 0305-53-160 | 8 | | | | |

0A01 FC3***-902450

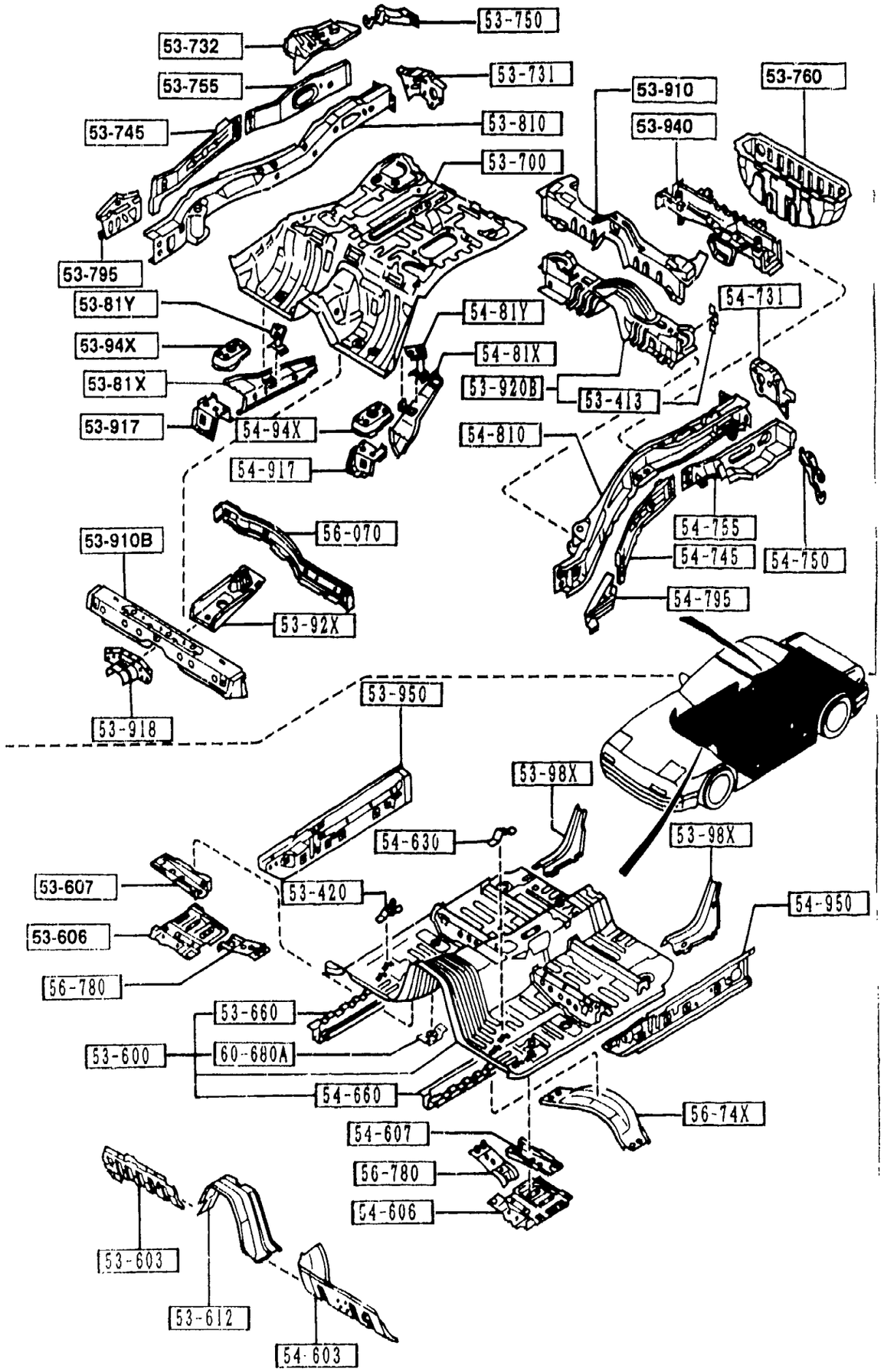




| PART NO. | QTY | MODEL/RESTRICTION | MODEL/RESTRICTION | MODEL/RESTRICTION | FROM-TO |
|---|---|---|---|---|---|
| 53-413 | | BRACKET,MAT-TRUNK ROOM | | | |
| B092-53-413 | 2 | | | | |
| 53-420 | | BRKT'A',CONTROL UNIT | | | |
| FB01-53-685 | 2 | | | | |
| 53-600 | | PAN,FLOOR-FRONT | | | |
| FC33-53-600A | 1 | (MT) | | | |
| FC47-53-600A | 1 | (AT) | | | |
| 53-603 | | REINF.'A'(R),FRONT FLOOR | | | |
| FB67-53-603A | 1 | | | | |
| 53-606 | | REINF.'B'(R),FRONT FLOOR | | | |
| FB67-53-606 | 1 | | | | |
| 53-607 | | REINF.'C'(R),FRONT FLOOR | | | |
| FB67-53-607A | 1 | | | | |
| 53-612 | | REINFORCEMENT,TUNNEL-FRT | | | |
| FB67-53-612A | 1 | | | | |
| 53-660 | | FRAME(RR.R),FRONT | | | |
| FB67-53-660 | 1 | (MT) | | | |
| F056-53-660 | 1 | (AT) | | | |
| 53-700 | | PAN,FLOOR-REAR | | | |
| FC01-53-710A | 1 | | | | |
| 53-731 | | PLATE(R),SEAL-RR S/FRAME | | | |
| FB01-53-731B | 1 | | | | |
| 53-732 | | PANEL(R),SIDE-RR FLOOR | | | |
| FB01-53-732A | 1 | | | | |
| 53-745 | | PLATE'A'(R),CLOSING-FRT | | | |
| FC33-53-74X | 1 | | | | |
| 53-750 | | BRKT(R),SILENCER-S/PANEL | | | |
| FB67-53-750A | 1 | | | | |

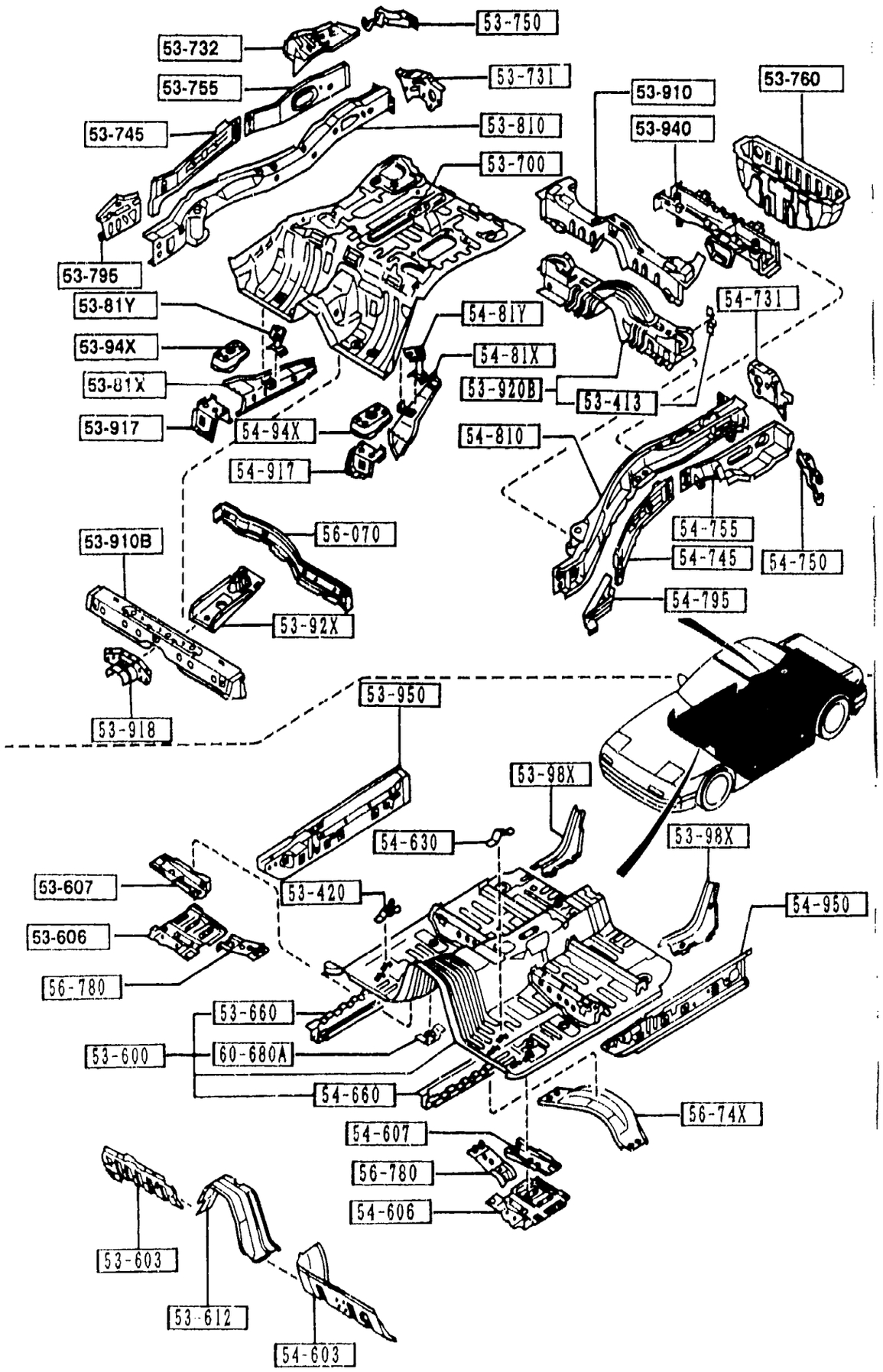


AUFA03



| PART NO. | QTY | MODEL/RESTRICTION | MODEL/RESTRICTION | MODEL/RESTRICTION | FROM-TO |
|---|---|---|---|---|---|
| 53-755<br>FC33-53-75X | 1 | PLATE'A'(R),CLOSING-RR | | | |
| 53-760<br>FB67-53-760B | 1 | PAN,SPARE TIRE | | | |
| 53-795<br>FB01-53-796 | 1 | PLATE'C'(R),CLOSING-FRAME | | | |
| 53-81X<br>FB67-53-81XA | 1 | FRAME(R),REAR SIDE-UPPER | | | |
| 53-81Y<br>FB67-53-81YA | 1 | BRKT(R),STOPPER-R. FRAME | | | |
| 53-810<br>FC33-53-810AN(FC33-53-810A) | 1 | FRAME(R),REAR SIDE | | | -0A01 |
| FC33-53-810A | 1 | | | | 0A01- |
| 53-910<br>FC66-53-91X | 1 | MEMBER NO.3,CROSS-UPPER | | | |
| 53-910B<br>FC66-53-910 | 1 | REINF.,CROSSMEMBER NO3-UP | | | |
| 53-917<br>FB67-53-917 | 1 | REINF.(R),NO.3 MEMBER-UP. | | | |
| 53-918<br>FB67-53-918 | 1 | REINFORCEMENT,TUNNEL-REAR | | | |
| 53-92X<br>FB67-53-92X | 1 | REINF.,SPARE TIRE | | | |
| 53-920B<br>FC33-53-920 | 1 | MEMBER NO.3,CROSS-LOWER | | | |
| 53-94X<br>FB67-53-94X | 1 | BRKT(R),MOTOR-SIDE FRAME | | | |

0A01 FC3***-902450

CAT. AUFA03-07

1993-12

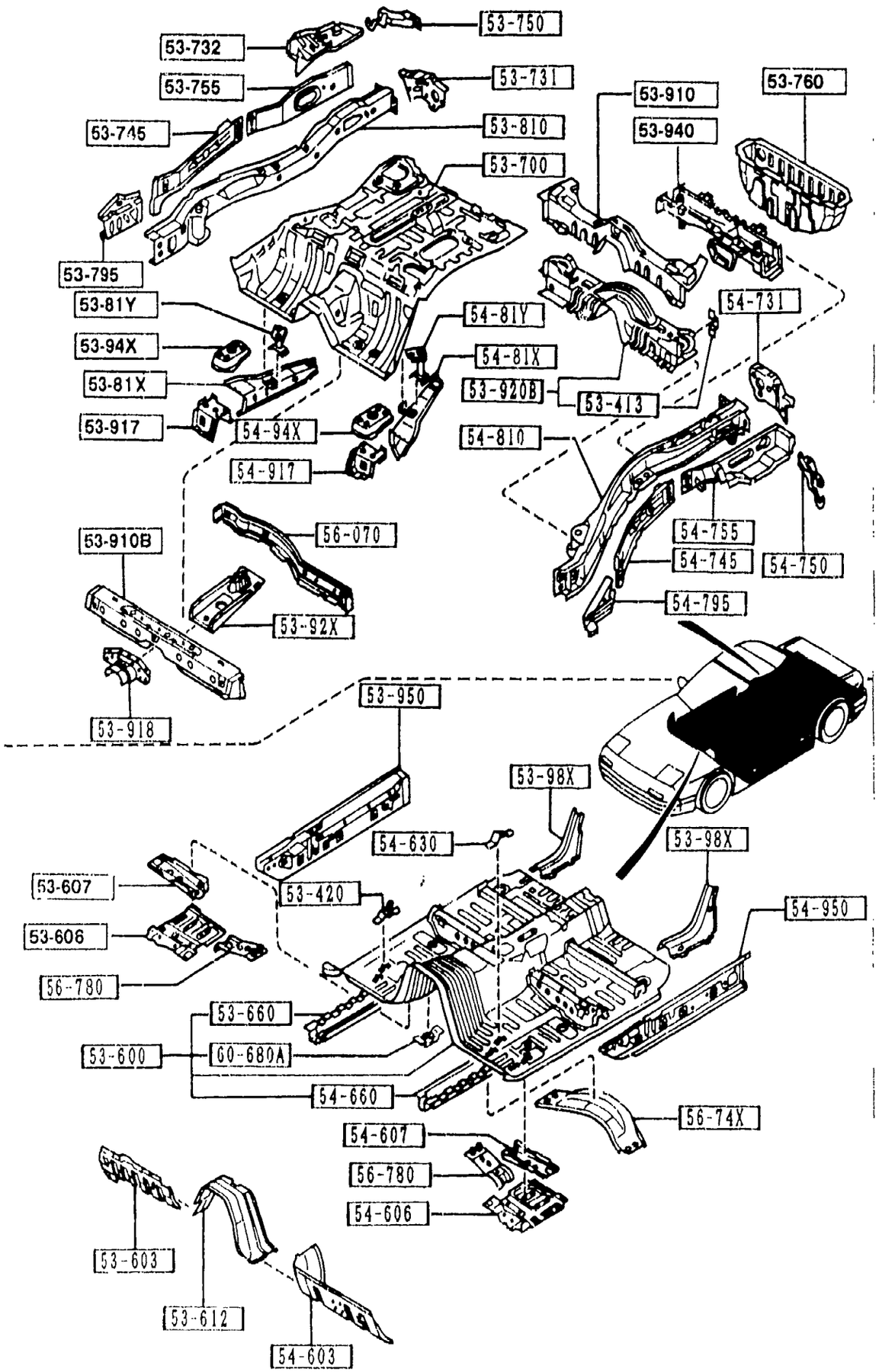


AUFA03



| PART NO. | QTY | MODEL/RESTRICTION | MODEL/RESTRICTION | MODEL/RESTRICTION | FROM-TO |
|---|---|---|---|---|---|
| 53-940<br>FC01-53-930A | 1 | MEMBER NO.4,CROSS | | | |
| 53-950<br>FB67-53-950 | 1 | PANEL(R),SIDE SILL | | | |
| 53-98X<br>FB67-53-98XA | 2 | GUSSET,FRONT FLOOR PAN | | | |
| 54-603<br>FB67-54-603A | 1 | REINF.'A'(L),FRONT FLOOR | | | |
| 54-606<br>FB67-54-606 | 1 | REINF.'B'(L),FRONT FLOOR | | | |
| 54-607<br>FB67-54-607A | 1 | REINF.'C'(L),FRONT FLOOR | | | |
| 54-630<br>FB01-54-685 | 2 | BRKT'B',CONTROL UNIT | | | |
| 54-660<br>FB67-54-660 | 1 | FRAME(RR.L),FRONT | | | |
| 54-731<br>FB01-54-731B | 1 | PLATE(L),SEAL-RR S/FRAME | | | |
| 54-745<br>FC33-54-74X | 1 | PLATE'A'(L),CLOSING-FRT | | | |
| 54-750<br>FB67-54-750A | 1 | BRKT(L),SILENCER-S/PANEL | | | |
| 54-755<br>FC33-54-75X | 1 | PLATE'A'(L),CLOSING-RR | | | |
| 54-795<br>FB01-54-796 | 1 | PLATE'C'(L),CLOSING-FRAME | | | |
| 54-81X<br>FB67-54-81XA | 1 | FRAME(L),REAR SIDE-UPPER | | | |

5370 A FLOOR PANELS
(CONVERTIBLE)

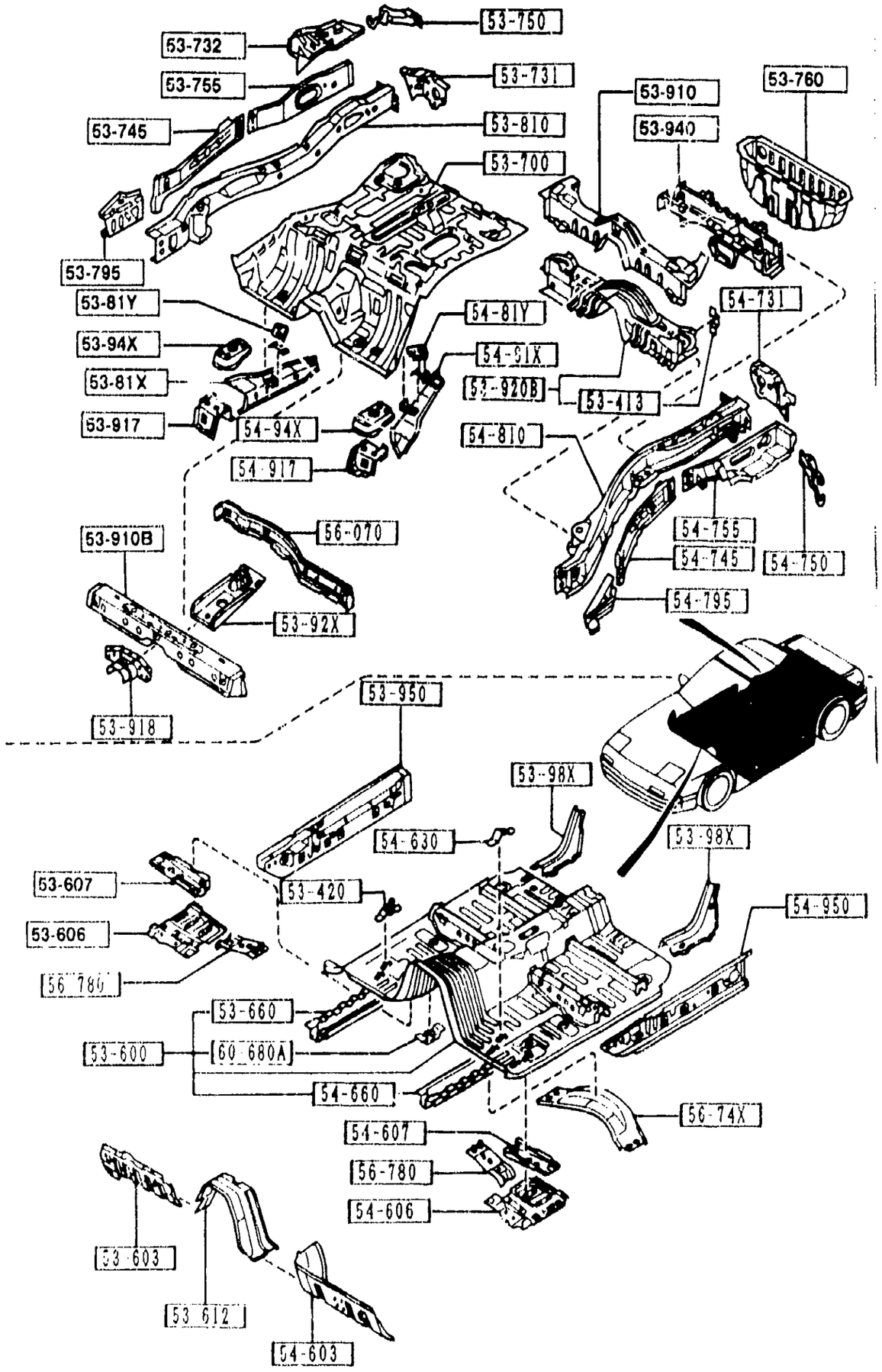


AUFA03

5370 A-4 * FLOOR PANELS
(CONVERTIBLE)

| PART NO. | QTY | MODEL/RESTRICTION | MODEL/RESTRICTION | MODEL/RESTRICTION | FROM-TO |
|---|---|---|---|---|---|
| 54-81Y | | BRKT(L),STOPPER-R. FRAME | | | |
| FB67-54-81YA | 1 | | | | |
| 54-810 | | FRAME(L),REAR SIDE | | | |
| FC33-54-810A | 1 | | | | -0A01 |
| AN(FC33-54-810B) | | | | | |
| FC33-54-810B | 1 | | | | 0A01- |
| 54-917 | | REINF.(L),NO.3 MEMBER-UP, | | | |
| FB67-54-917 | 1 | | | | |
| 54-94X | | BRKT(L),MOTOR-SIDE FRAME | | | |
| FB67-54-94X | 1 | | | | |
| 54-950 | | PANEL(L),SIDE SEAL | | | |
| FB67-54-950 | 1 | | | | |
| 56-070 | | PANEL,BULK HEAD | | | |
| FB67-53-726A | 1 | | | | |
| 56-74X | | MEMBER,FRONT FLOOR | | | |
| FB67-56-74XA | 1 | (MT) | | | |
| 56-780 | | GUSSET,FRONT FLOOR | | | |
| FB67-56-780 | 1 | (AT) | | | |
| FB67-56-780 | 2 | (MT) | | | |
| 60-680A | | BRACKET,FLOOR | | | |
| 0305-53-160 | 7 | | | | |

0A01 FC3***-902450

CAT. AUFA03-07

1993-12

5380 FLOOR ATTACHMENTS (HOLE COVERS)

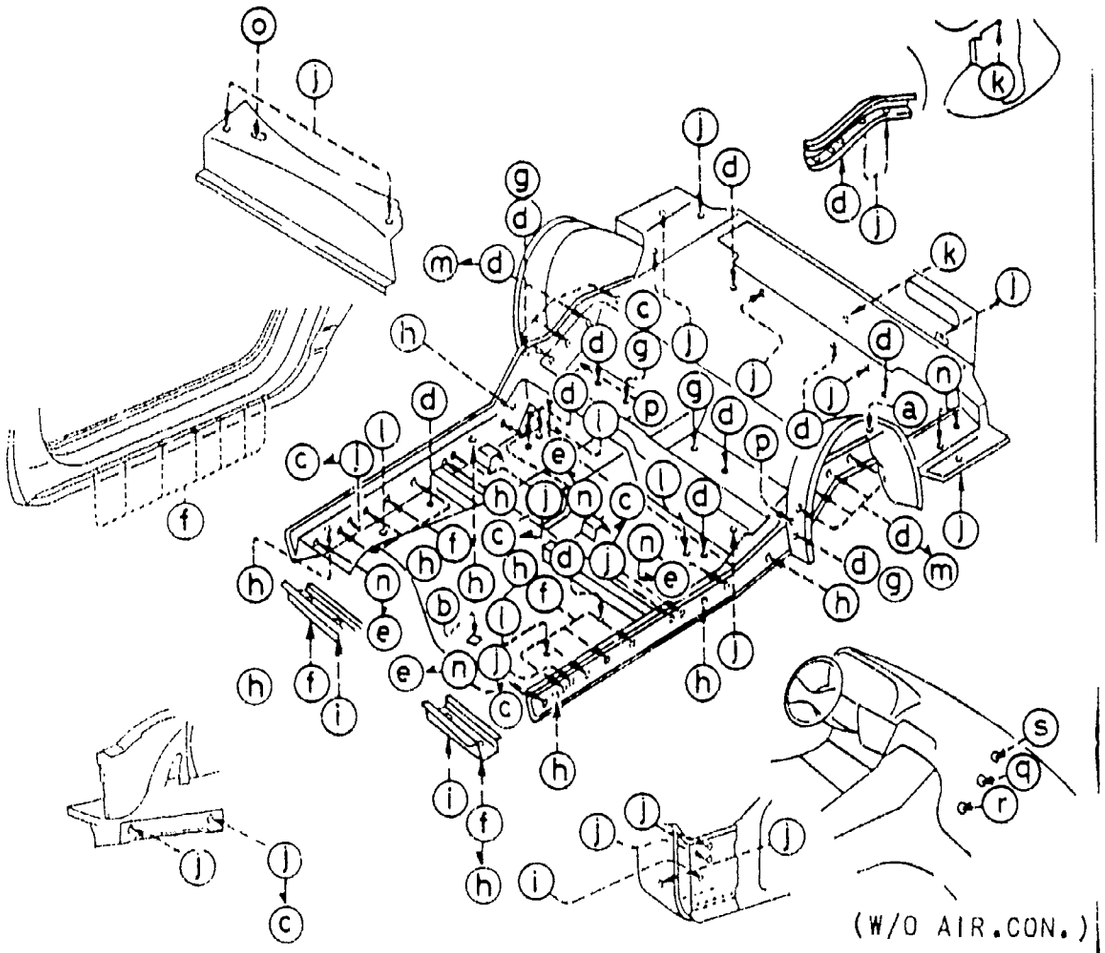


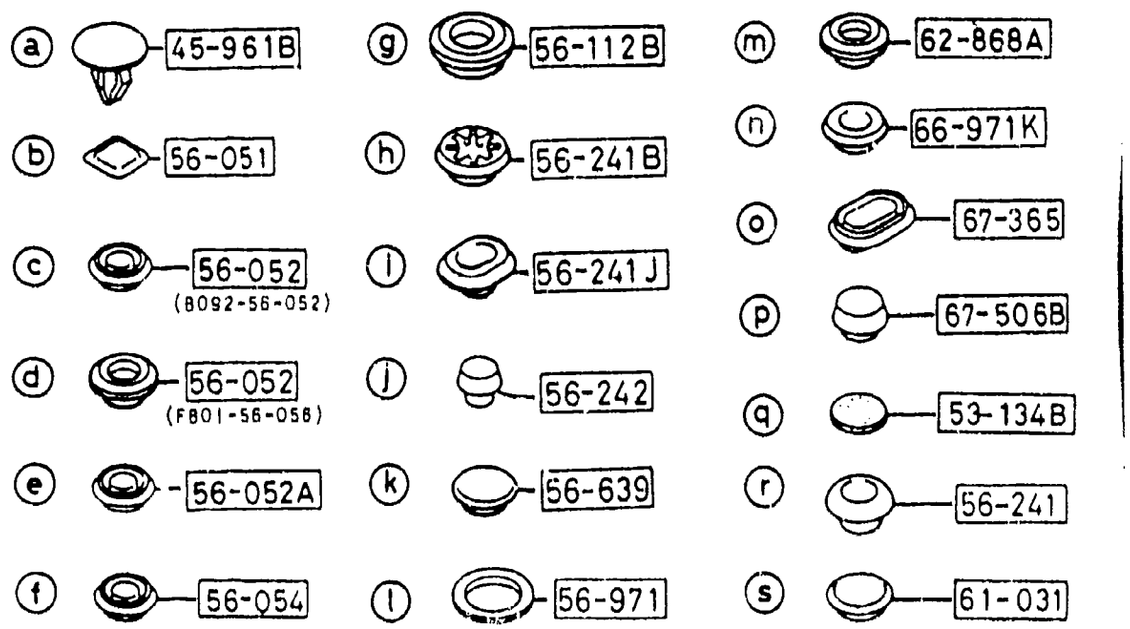




5380 -1 FLOOR ATTACHMENTS (HOLE COVERS)

| PART NO. | QTY | MODEL/RESTRICTION | MODEL/RESTRICTION | MODEL/RESTRICTION | FROM-TO |
|---|---|---|---|---|---|
| 45-961B | | CAP | | | |
| H002-45-961 | 1 | (CONVERTIBLE) | | | |
| 53-134B | | RUBBER,DUST SEAL | | | |
| 0187-53-134 | 1 | (W/O AIR CON.) | | | |
| 56-051 | | COVER,HOLE | | | |
| 1011-56-051 | 2 | | | | |
| 56-052 | | PLUG,DRAIN | | | |
| B092-56-052 | 6 | D=12MM | | | |
| FB01-56-056 | 11 | (CPE) | | | |
| FB01-56-056 | 21 | (CONVERTIBLE) | | | |
| 56-052A | | PLUG,HOLE-F.SIDE FRAME | | | |
| H260-56-052 | 2 | (CONVERTIBLE) | | | |
| H260-56-052 | 4 | (CPE) | | | |
| 56-054 | | PLUG,HOLE | | | |
| FB67-56-051 | 24 | (CONVERTIBLE) | | | |
| 56-112B | | PLUG,DRAIN | | | |
| FB01-56-057 | 2 | (CONVERTIBLE) | | | |
| FB01-56-057 | 4 | (CPE) | | | |
| 56-241 | | PLUG,DRAIN | | | |
| 0118-56-241 | 1 | (W/O AIR CON.) | | | |
| 56-241B | | PLUG | | | |
| B001-56-051 | 18 | (CPE) | | | |
| 56-241J | | PLUG,DRAIN | | | |
| 8477-56-241 | 2 | (CPE) | | | |
| 8477-56-241 | 4 | (CONVERTIBLE) | | | |
| 56-242 | | PLUG,DRAIN | | | |
| 0118-56-242B | 22 | (CONVERTIBLE) | | | |
| 0118-56-242B | 24 | (CPE) | | | |

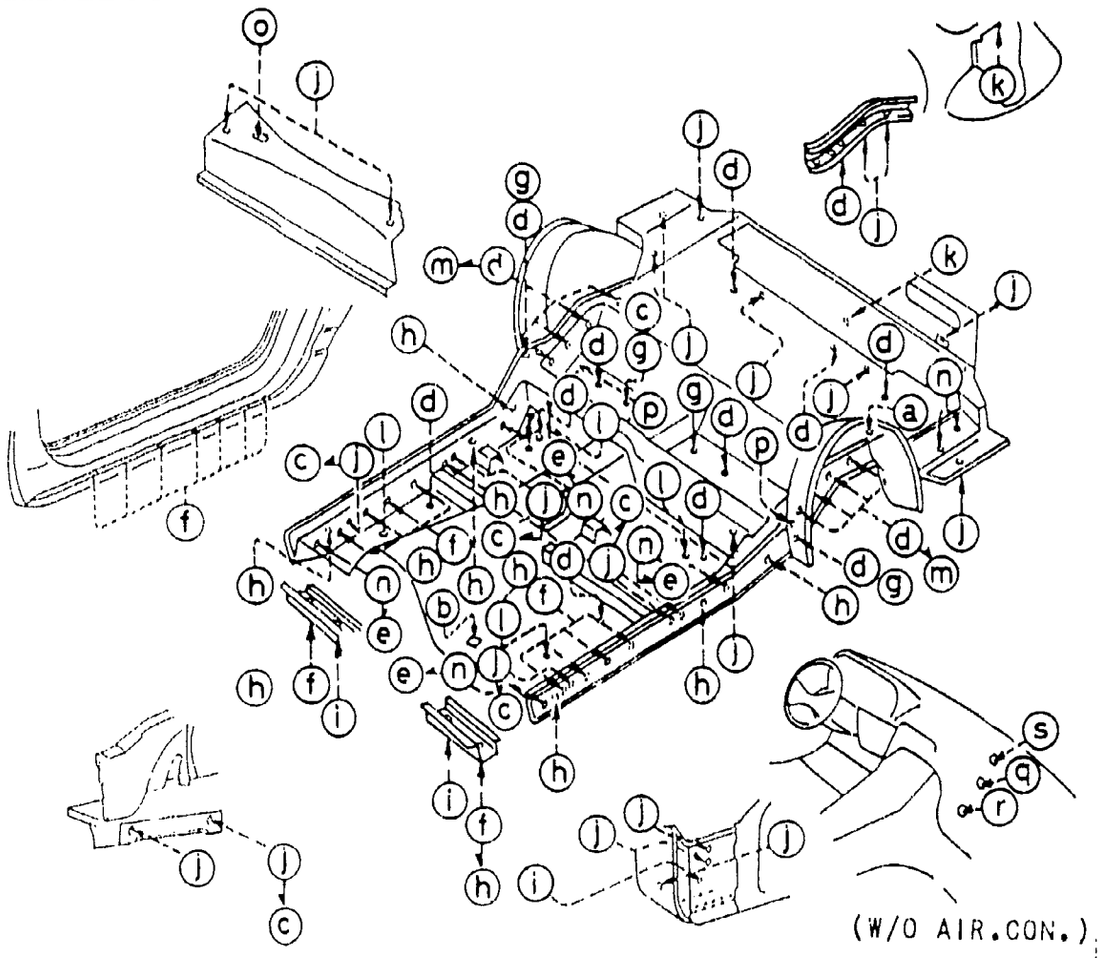


| PART NO. | QTY | MODEL/RESTRICTION | MODEL/RESTRICTION | MODEL/RESTRICTION | FROM-TO |
|---|---|---|---|---|---|
| 56-639 | | COVER,SERVICE HOLE | | | |
| 0810-56-639 | 1 | (CONVERTIBLE) | | | |
| 0810-56-639 | 3 | (CPE) | | | |
| 56-971 | | COVER,HOLE | | | |
| 0366-56-971 | 4 | | | | |
| 61-031 | | PLUG,HOLE | | | |
| 1708-61-031 | 1 | (W/O AIR CON.) | | | |
| 62-868A | | COVER,HOLE-LIFT GATE | | | |
| B499-62-868 | 8 | (CPE) | | | |
| 66-971K | | GROMMET | | | |
| 0222-66-971 | 2 | (CPE) | | | |
| 0222-66-971 | 4 | (CONVERTIBLE) | | | |
| 67-365 | | COVER,SEAL-COWL PANEL | | | |
| FB31-56-058 | 1 | | | | |
| 67-506B | | COVER,SERVICE HOLE | | | |
| G043-67-506 | 2 | (CONVERTIBLE) | | | |

ⓐ 45-961B
ⓑ 56-051
ⓒ 56-052 (B092-56-052)
ⓓ 56-052 (FB01-56-056)
ⓔ 56-052A
ⓕ 56-054
ⓖ 56-112B
ⓗ 56-241B
ⓘ 56-241J
ⓙ 56-242
ⓚ 56-639
ⓛ 56-971
ⓜ 62-868A
ⓝ 66-971K
ⓞ 67-365
ⓟ 67-506B
ⓠ 53-134B
ⓡ 56-241
ⓢ 61-031

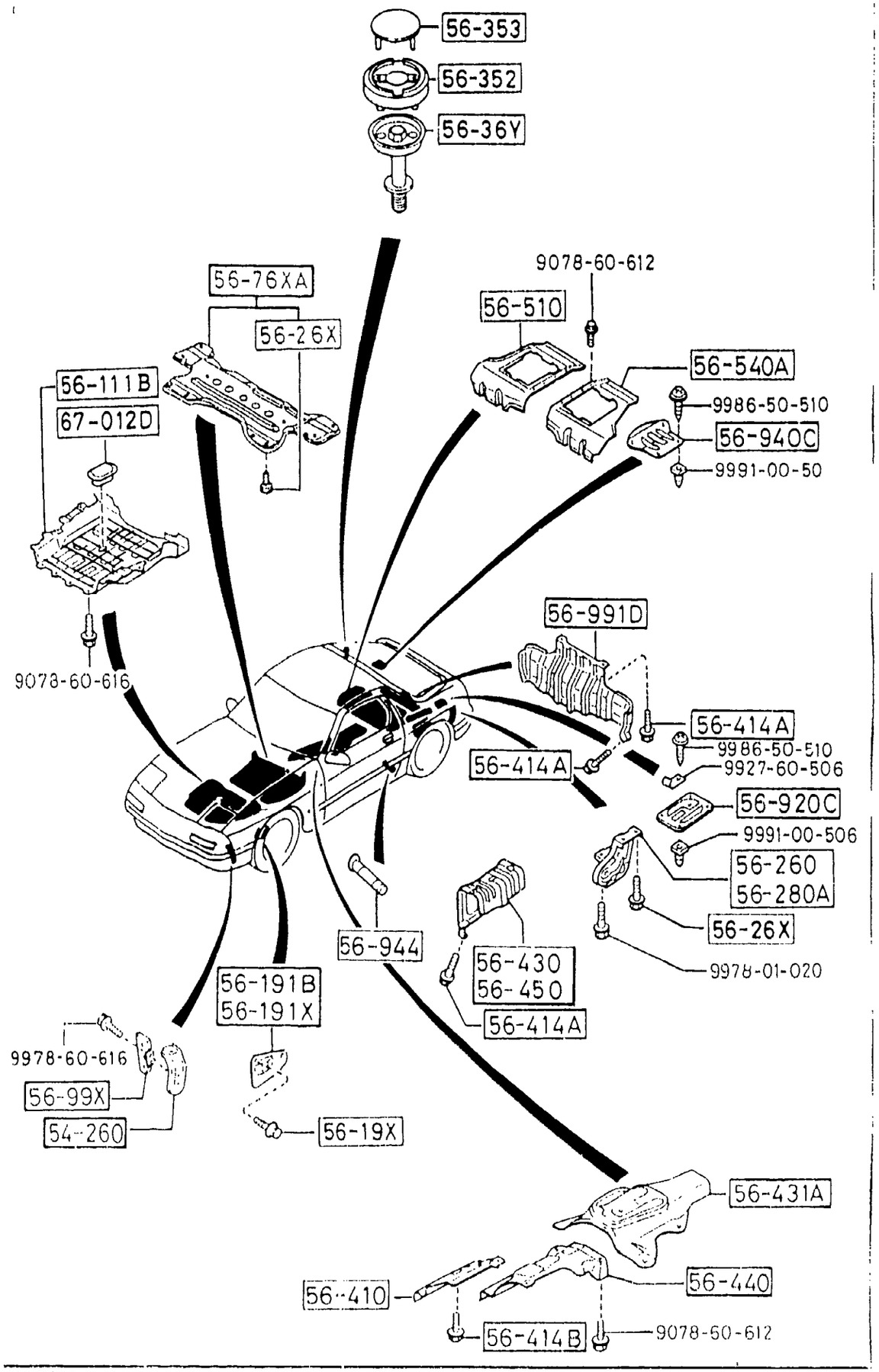


AUFA03

| PART NO. | QTY | MODEL/RESTRICTION | MODEL/RESTRICTION | MODEL/RESTRICTION | FROM-TO |
|---|---|---|---|---|---|
| 54-260 | | BRACKET,BATTERY | | | |
| FB01-56-990B | 1 | | | | |
| 56-111B | | COVER,UNDER-FRONT | | | |
| FB01-56-111C | 1 | | | | |
| 56-19X | | BOLT,SPLASH SHIELD | | | |
| FB01-56-19XA | 4 | | | | |
| 56-191B | | SHIELD(L),SPLASH-S. FRAME | | | |
| FB01-56-191A | 1 | | | | |
| 56-191X | | SHIELD(R),SPLASH-S. FRAME | | | |
| FB01-56-192A | 1 | | | | |
| 56-26X | | BOLT,REAR HOOK | | | |
| FB01-56-26X | 10 | (CPE) | | | |
| FB01-56-26X | 18 | (CONVERTIBLE) | | | |
| 56-260 | | HOOK(R),REAR | | | |
| FB01-56-260C | 1 | | | | |
| 56-280A | | HOOK(L),REAR | | | |
| FB01-56-280C | 1 | | | | |
| 56-352 | | SEAL(L),DUST | | | |
| FB67-56-352A | 2 | (CONVERTIBLE) | | | |
| 56-353 | | TRAY(UP.),LOCK HOOK | | | |
| FB67-56-353A | 2 | (CONVERTIBLE) | | | |
| 56-36Y | | BOLT,LOWER TRAY-STOP .BRKT | | | |
| FB67-56-36YA | 2 | (CONVERTIBLE) | | | |
| 56-410 | | INSULATOR,HEAT-FRONT | | | |
| FB01-56-410B | 1 | | | | |
| 56-414A | | BOLT,SILENCER | | | |
| FB01-56-416 | 10 | | | | |

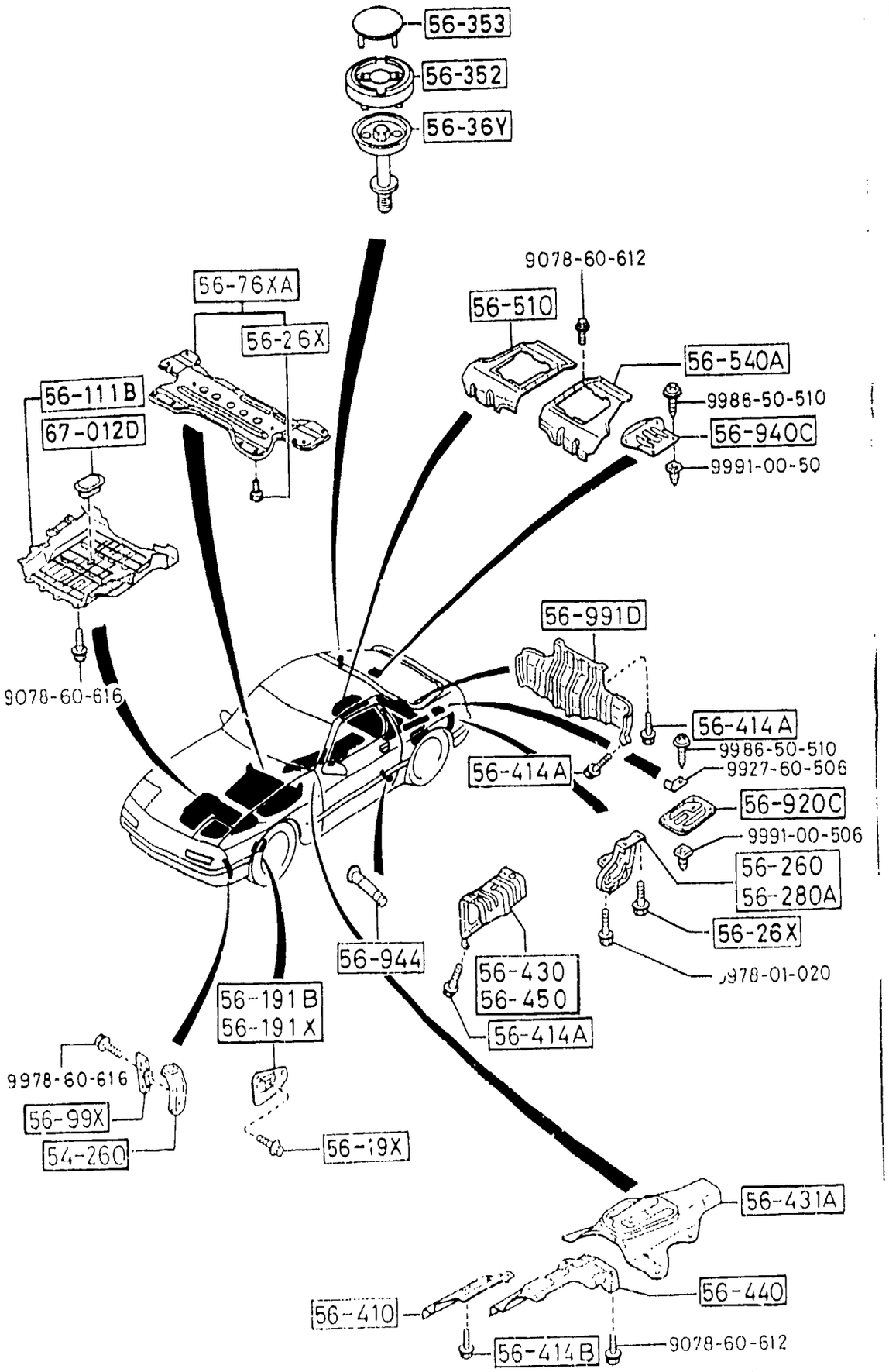


| PART NO. | QTY | MODEL/RESTRICTION | MODEL/RESTRICTION | MODEL/RESTRICTION | FROM-TO |
|---|---|---|---|---|---|
| 56-414B<br>FB01-56-414 | 11 | BOLT,INSULATOR,FRT HEAT | | | |
| 56-430<br>FB01-56-460D | 1 | INSULATOR(R) | | | |
| 56-431A<br>FB01-56-430C | 1 | INSULATOR NO.3,FRONT | | | |
| 56-440<br>FB01-56-420A | 1 | INSULATOR NO.2,FRONT | | | |
| 56-450<br>FB01-56-450D | 1 | INSULATOR(L) | | | |
| 56-510<br>FC01-56-510A | 1 | DECK(R),FLOOR (CPE) | | | |
| 56-540A<br>FC01-56-521A | 1 | DECK(L),FLOOR (CPE) | | | |
| 56-76XA<br>FB67-56-76XB | 1 | MEMBER,CROSS-FRONT FRAME (CONVERTIBLE) | | | |
| 56-920C<br>FB01-56-920 | 1 | COVER (L),SERVICE-RR FLOOR | | | |
| 56-940C<br>FB01-56-940 | 1 | COVER (R),SERVICE-RR FLOOR | | | |
| 56-944<br>FB01-56-944 | 2 | COLLAR,HARNESS-SIDE SILL (CONVERTIBLE) | | | |
| 56-99X<br>FC01-56-99X | 1 | SEAL,SIDE FRAME&BATT.BRKT | | | |
| 56-991D<br>FB71-56-470 | 1 | INSULATOR,TANK-FUEL | | | |
| 67-012D<br>S083-67-012A | 1 | GROMMET | | | |

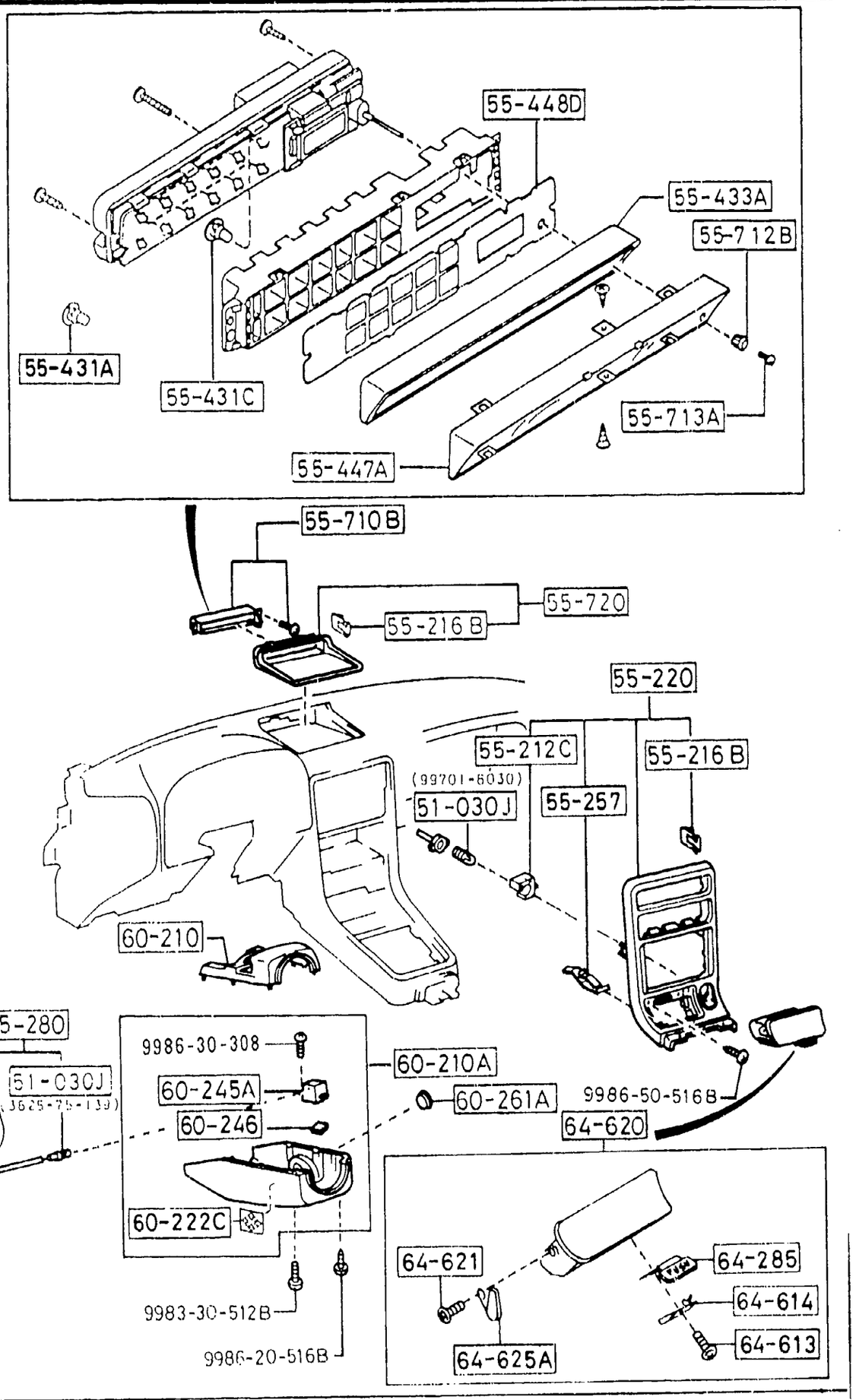


| PART NO. | QTY | MODEL/RESTRICTION | MODEL/RESTRICTION | MODEL/RESTRICTION | FROM-TO |
|---|---|---|---|---|---|
| 51-030J | | BULB | | | |
| 3625-75-139 | 1 | 12V 1.4W,FOR WARNING BASE,-OPT, TURBO, (W/KEY ILLUMI.) | | | |
| 99701-6030 | 1 | 12V 3.4W | | | |
| 55-212C | | BOX,LAMP-(C) PANEL | | | |
| FC01-55-212 | 1 | | | | |
| 55-216B | | SPRING,CENTER PANEL | | | |
| B092-55-257 | 4 | | | | |
| 55-220 | | PANEL,CENTER | | | |
| FC01-55-210A | 1 | | | | |
| 55-257 | | PLATE,PARTITION | | | |
| FC01-55-257 | 2 | | | | |
| 55-280 | | BULB & SOCKET | | | |
| G032-55-280A | 1 | BASE,-OPT, TURBO, (W/KEY ILLUMI.) | | | |
| 55-431A | | BULB,AUTO CLOCK | | | |
| FC66-55-431 | 1 | (CONVERTIBLE) | | | |
| 55-431C | | BULB'B',WARNING UNIT | | | |
| FB02-55-431 | 10 | (CONVERTIBLE) | | | |
| FB02-55-431 | 11 | ((CPE))(W/O TURBO) ) | | | |
| FB02-55-431 | 12 | ((CPE))(TURBO) ) | | | |
| 55-433A | | SEPARATOR,WARNING UNIT | | | |
| FB01-55-433 | 2 | | | | |
| 55-447A | | GLASS,FRONT-WARNING UNIT | | | |
| FB02-55-447B | 1 | | | | |
| 55-448D | | LENS,WARNING UNIT | | | |
| FC02-55-448 | 1 | ((CPE))(W/O TURBO) ) | | | |
| FC06-55-448 | 1 | ((CPE))(TURBO) ) | | | |
| FC66-55-448 | 1 | (CONVERTIBLE) | | | |

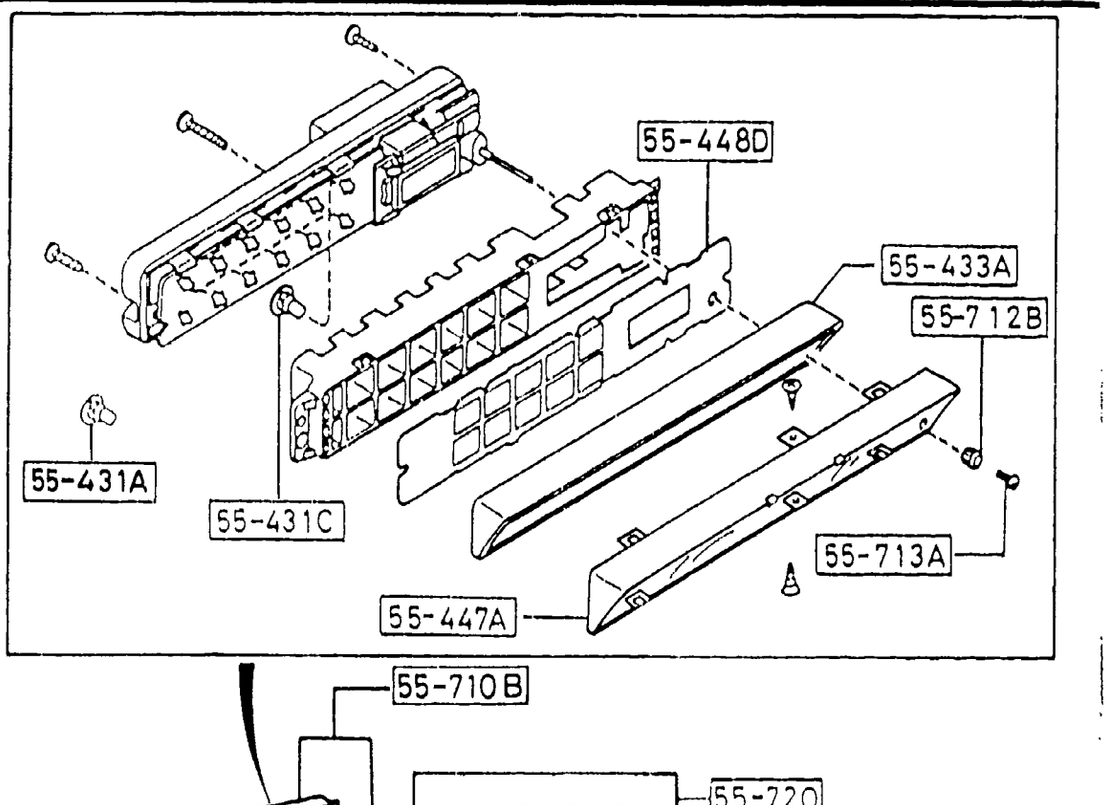


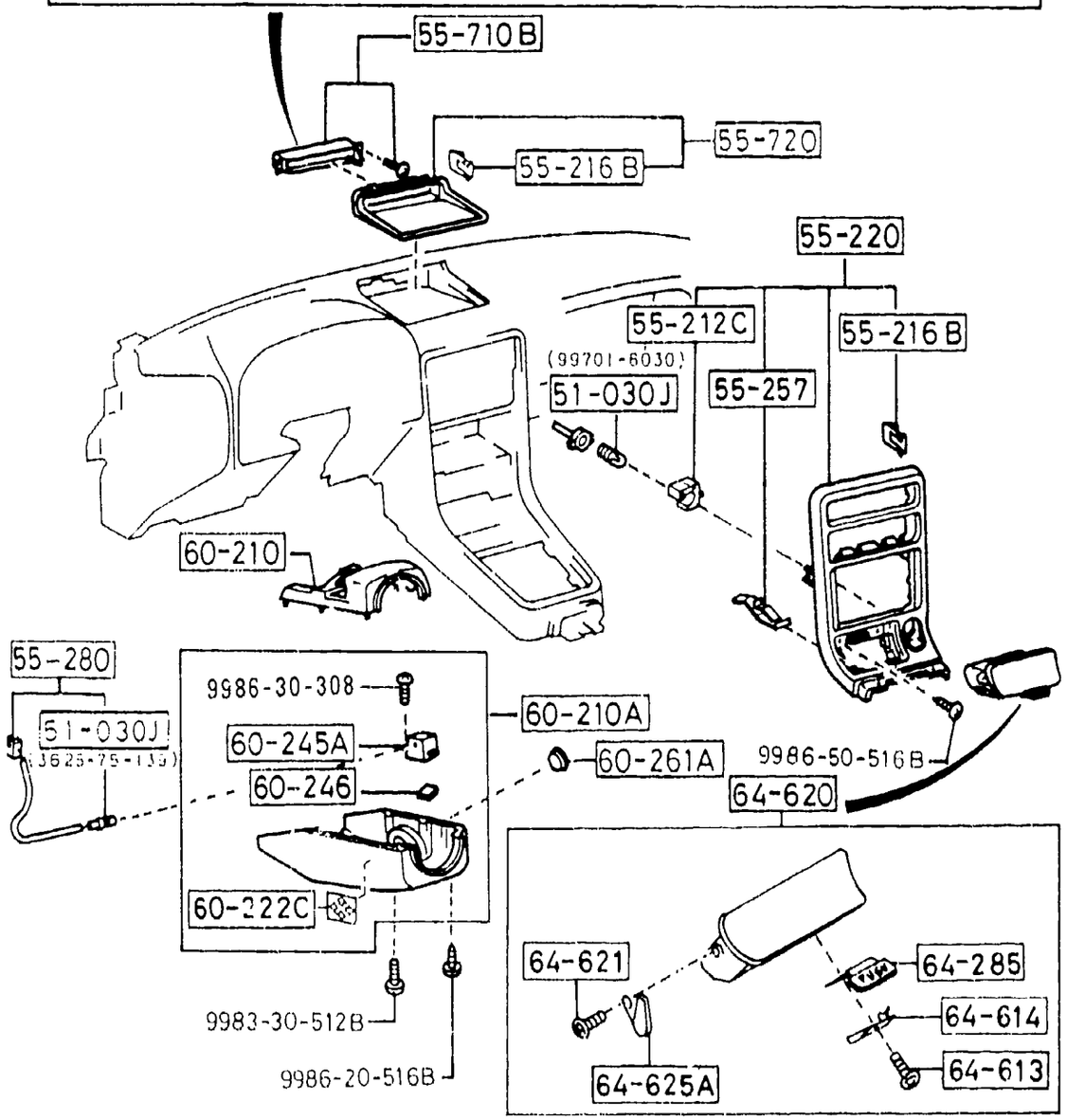


| PART NO. | QTY | MODEL/RESTRICTION | MODEL/RESTRICTION | MODEL/RESTRICTION | FROM-TO |
|---|---|---|---|---|---|
| 55-710B | | UNIT,WARNING | | | |
| FC02-55-710 | 1 | ((CPE))(W/O TURBO) ) | | | |
| FC06-55-710 | 1 | ((CPE))(TURBO) ) | | | |
| FC66-55-710 | 1 | (CONVERTIBLE) | | | |
| 55-712B | | KNOB,CLOCK | | | |
| FB01-55-713 | 1 | | | | |
| 55-713A | | SCREW,RESET KNOB | | | |
| FB01-55-714 | 1 | | | | |
| 55-720 | | BEZZEL,AUTO CLOCK | | | |
| F055-55-71XB | 1 | | | | |
| 02 | INT- | FD8 FE1 BLACK | | | |
| 48 | INT- | FD9 BLUE | | | |
| 60-210 | | COVER,COLUMN-UPPER | | | |
| FC66-60-220A | 1 | (CONVERTIBLE) | | | |
| FB01-60-221A | 1 | (CPE) | | | |
| 60-210A | | COVER,COLUMN-LOWER | | | |
| FB01-60-230A | 1 | (CPE) | | | |
| FC66-60-230B | 1 | (CONVERTIBLE) | | | |
| 60-222C | | LABEL,INDICATOR | | | |
| BR70-60-222 | 1 | (CONVERTIBLE) | | | |
| 60-245A | | CASE,LAMP | | | |
| FB01-60-232 | 1 | (CPE) | | | |
| FC66-60-232 | 1 | (CONVERTIBLE) | | | |
| 60-246 | | LENS,COLUMN COVER | | | |
| FB01-60-233 | 1 | (CPE) | | | |
| FC66-60-233 | 1 | (CONVERTIBLE) | | | |
| 60-261A | | HOLDER,KEY CYLINDER | | | |
| FB01-60-261A | 1 | | | | |
| 64-285 | | SPRING,ASHTRAY | | | |

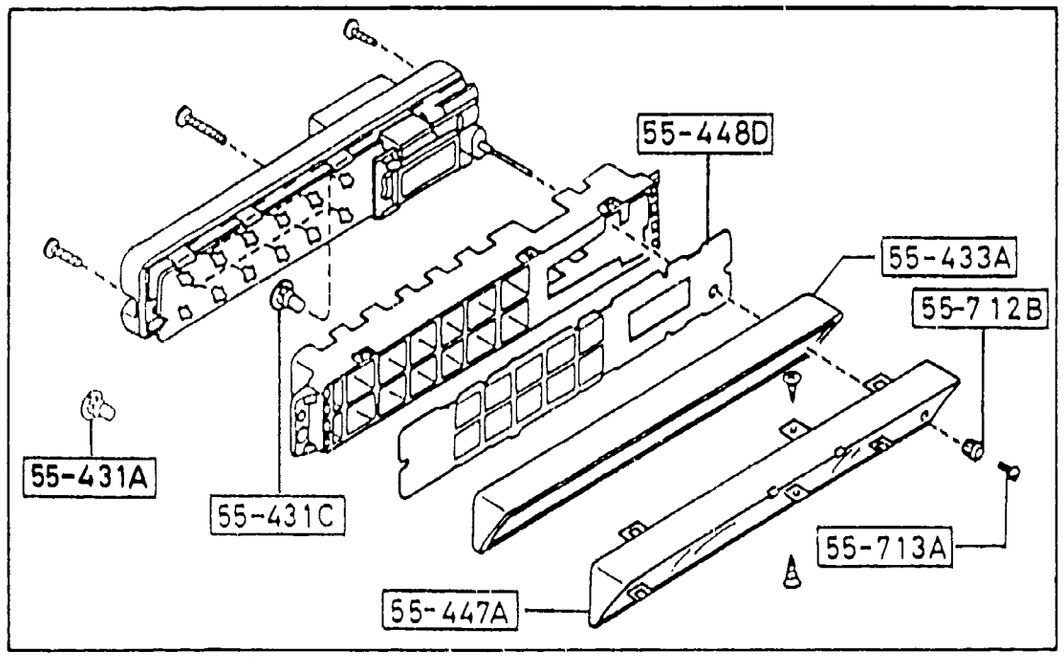


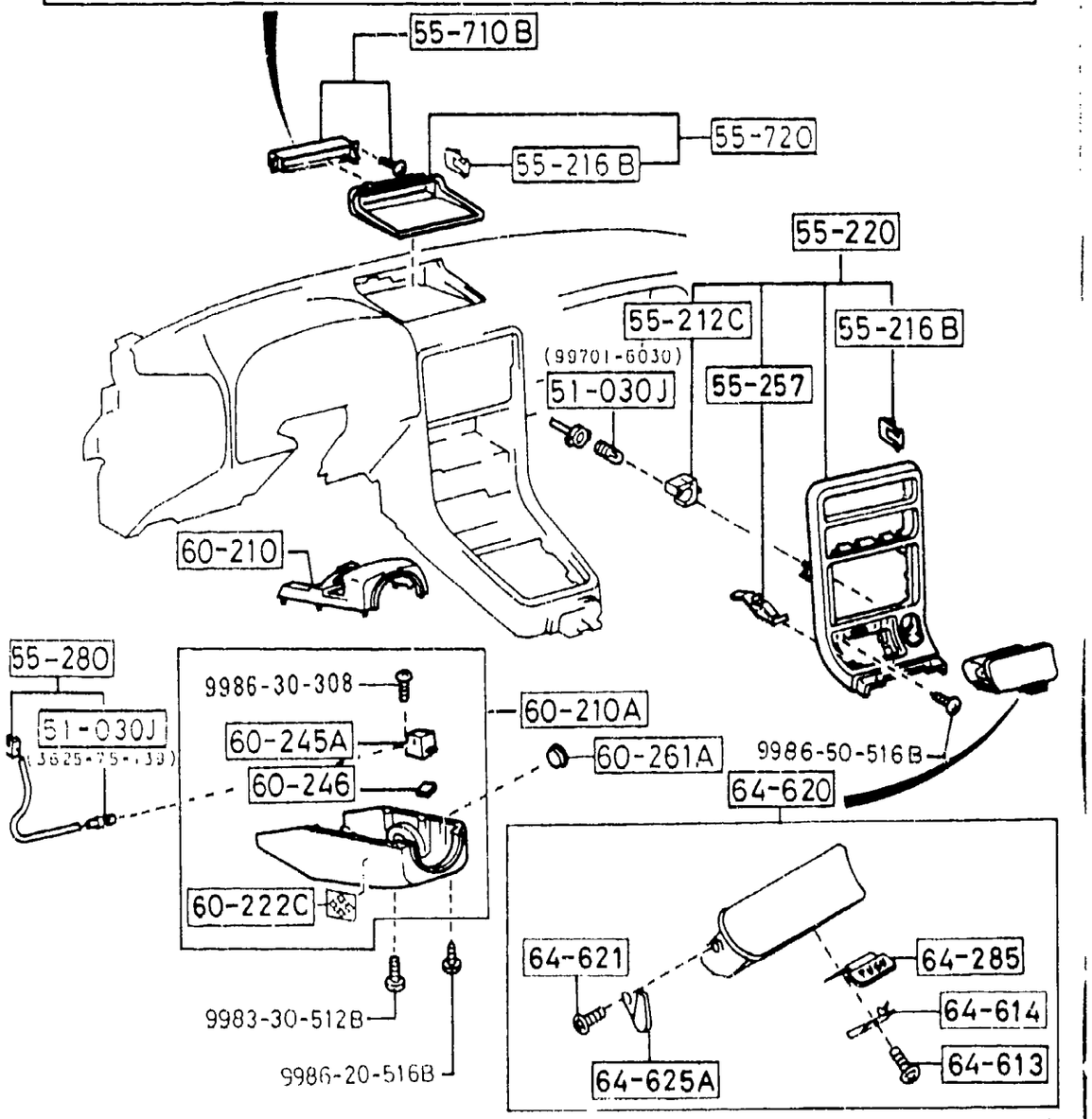


| PART NO. | QTY | MODEL/RESTRICTION | MODEL/RESTRICTION | MODEL/RESTRICTION | FROM-TO |
|---|---|---|---|---|---|
| CONT'D | | | | | |
| FC01-64-612 | 1 | | | | |
| 64-613 | | SCREW,ASHTRAY | | | |
| FC01-64-613 | 1 | | | | |
| 64-614 | | PLATE,LOCK-ASHTRAY | | | |
| FC01-64-614 | 1 | | | | |
| 64-620 | | TRAY,ASH | | | |
| FC01-64-610A | 1 | | | | |
| 64-621 | | SCREW,ASHTRAY | | | |
| FC01-64-621 | 1 | | | | |
| 64-625A | | DAMPER | | | |
| FC01-64-625 | 1 | | | | |

## 5520 METER HOOD

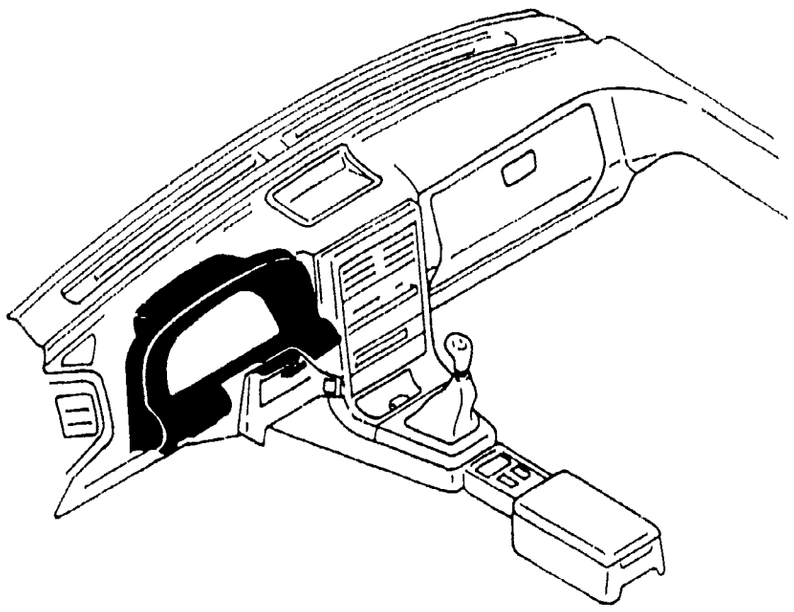

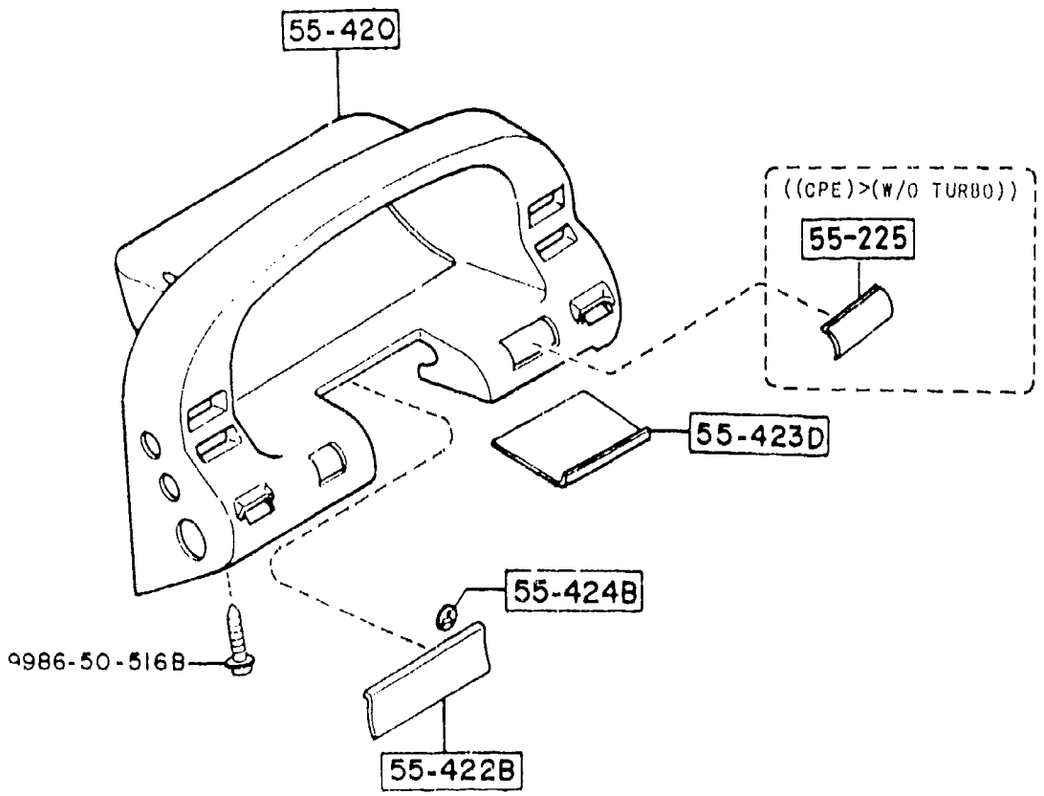


| PART NO. | QTY | MODEL/RESTRICTION | MODEL/RESTRICTION | MODEL/RESTRICTION | FROM-TO |
|---|---|---|---|---|---|
| 55-225 | | COVER,HOLE-CLUSTER SWITCH | | | |
| FC01-55-225 | 1 | ((CPE))(W/O TURBO) ) | | | |
| 55-420 | | HOOD,METER & CLUSTER SW. | | | |
| FC01-55-420 | 1 | (CPE) | | | |
| FC66-55-420 | 1 | (CONVERTIBLE) | | | |
| 55-422B | | SEAL,DUST-CLUSTER SWITCH | | | |
| FB01-55-422 | 1 | (CPE) | | | |
| 55-423D | | COVER,SERVICE HOLE-CLUST. | | | |
| FC01-55-423 | 1 | (CPE) | | | |
| 55-424B | | RING,PUSH-DUST SEAL | | | |
| FB01-55-424 | 2 | (CPE) | | | |
| FB01-55-424 | 6 | (CONVERTIBLE) | | | |

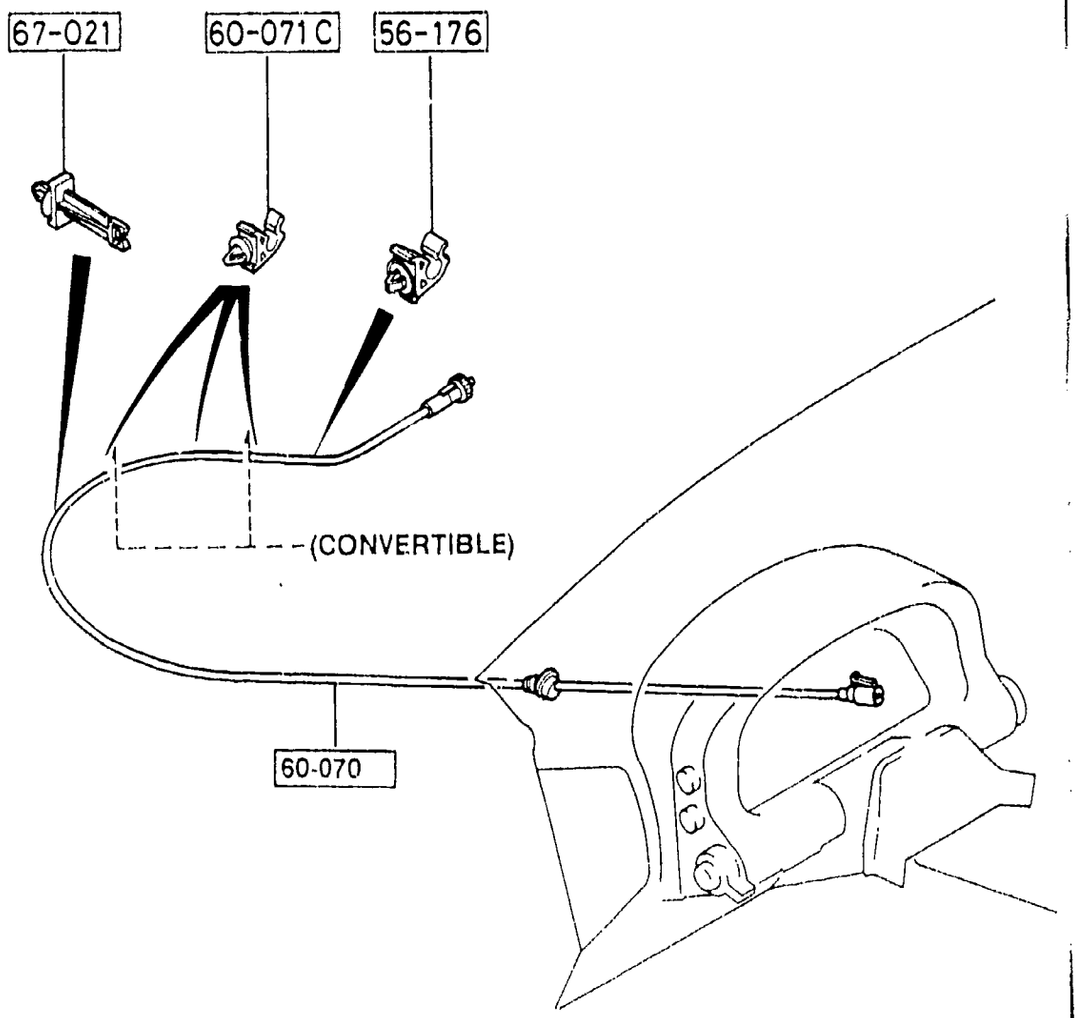


5530 -1 ✱ SPEEDOMETER CABLE

| PART NO. | QTY | MODEL/RESTRICTION | MODEL/RESTRICTION | MODEL/RESTRICTION | FROM-TO |
|---|---|---|---|---|---|
| 56-176 | | HOLDER,JACK HANDLE | | | |
| G030-56-176 | 1 | (CPE) | | | |
| 60-070 | | CABLE,SPEEDOMETER | | | |
| FB01-60-070A | 1 | ((CPE)>(MT) ) | | | |
| FB02-60-070A | 1 | ((CPE)>(AT) ) | | | |
| FB67-60-070 | 1 | ((CONVERTIBLE)>(MT) ) | | | |
| FC47-60-070 | 1 | ((CONVERTIBLE)>(AT) ) | | | |
| 60-071C | | CLIP | | | |
| UB40-60-071 | 1 | (CPE) | | | |
| UB40-60-071 | 3 | (CONVERTIBLE) | | | |
| 67-021 | | CLIP | | | |
| FB01-67-021 | 1 | | | | |

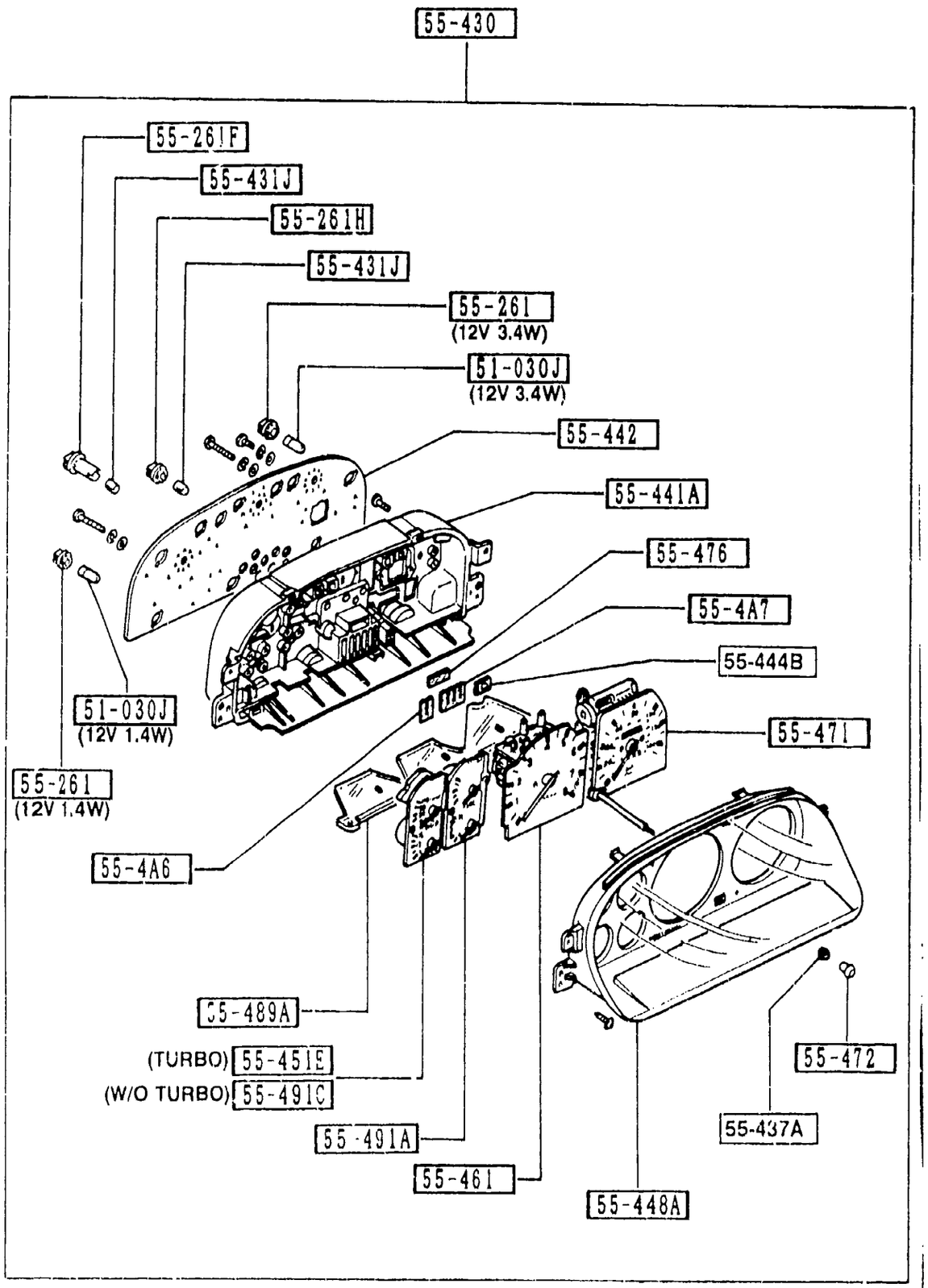


| PART NO. | QTY | MODEL/RESTRICTION | MODEL/RESTRICTION | MODEL/RESTRICTION | FROM-TO |
|---|---|---|---|---|---|
| 51-030J | | BULB | | | |
| 3625-75-139 | 1 | 12V 1.4W,FOR WARNING | | | |
| 99701-6030 | 8 | 12V 3.4W | | | |
| 55-261 | | SOCKET | | | |
| 8545-55-261 | 8 | 12V 3.4W | | | |
| 8548-55-261 | 1 | 12V 1.4W BLACK | | | |
| 55-261F | | SOCKET | | | |
| FC07-55-432 | 3 | ((W/O TURBO))(AT) ) | | | |
| 55-261H | | SOCKET,BULB | | | |
| KA01-55-466 | 4 | ((W/O TURBO))(AT) ) | | | |
| 55-4A6 | | LENS,INDICATOR-METER | | | |
| FC07-55-448 | 1 | ((W/O TURBO))(AT) ) | | | |
| 55-4A7 | | LENS,A/T INDICATOR-METER | | | |
| FC07-55-449 | 1 | ((W/O TURBO))(AT) ) | | | |
| 55-430 | | METER SET | | | |
| FC01-55-430A | 1 | ((W/O TURBO))(MT) ) | | | |
| FC07-55-430A | 1 | ((W/O TURBO))(AT) ) | | | |
| FC17-55-430A | 1 | (TURBO) | | | |
| 55-431J | | BULB'A',METER SET | | | |
| KA01-55-465 | 7 | 12V/2W ((W/O TURBO))(AT) ) | | | |
| 55-437A | | GROMMET,KNOB-METER SET | | | |
| FB01-55-437 | 1 | | | | |
| 55-441A | | CASE,METER | | | |
| FC01-55-441 | 1 | | | | |
| 55-442 | | PLATE NO.1,PRINT | | | |
| FC01-55-442 | 1 | ((W/O TURBO))(MT) ) | | | |
| FC07-55-442 | 1 | ((W/O TURBO))(AT) ) | | | |

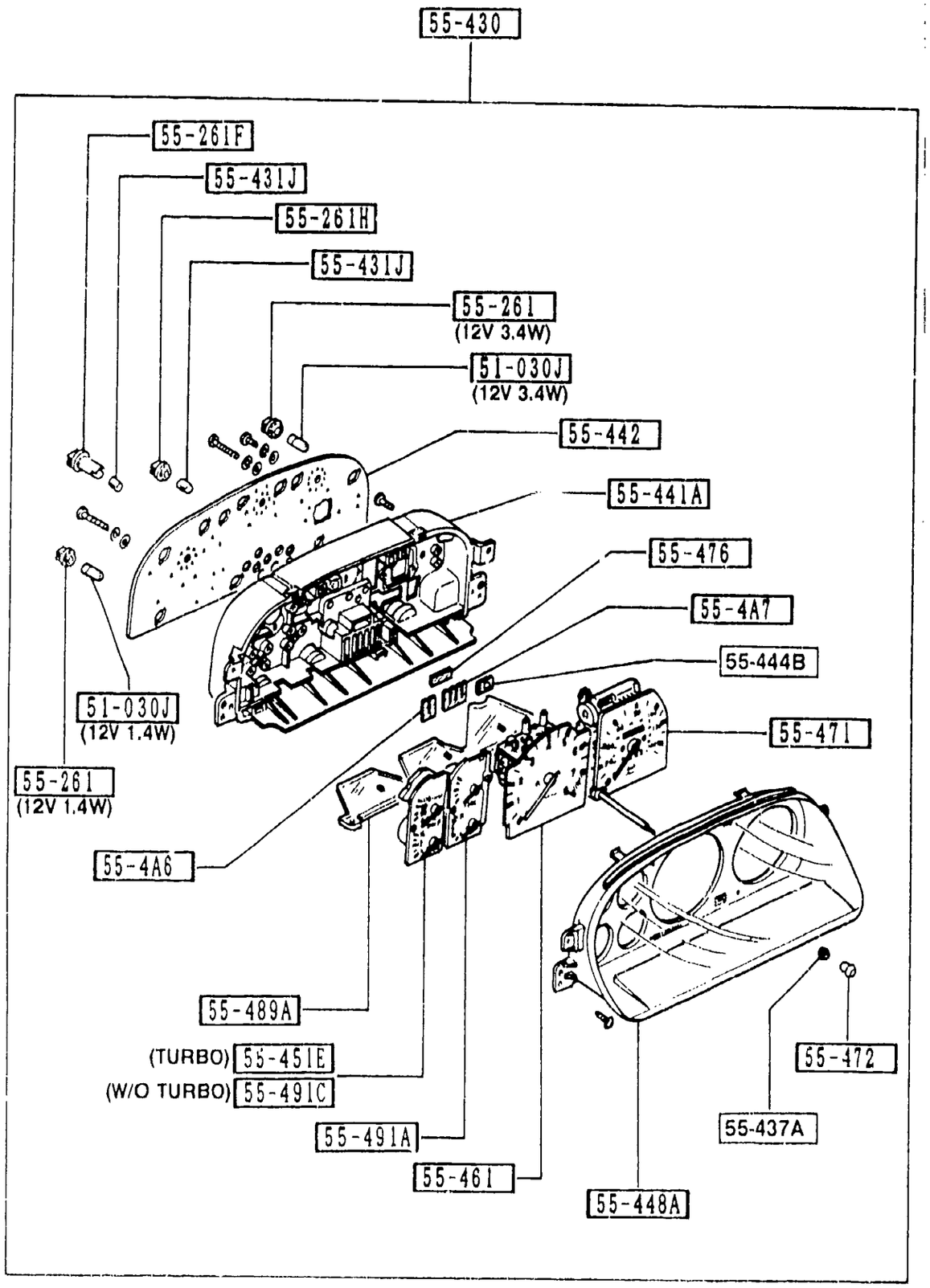


| PART NO. | QTY | MODEL/RESTRICTION | MODEL/RESTRICTION | MODEL/RESTRICTION | FROM-TO |
|---|---|---|---|---|---|
| CONT'D | | | | | |
| FC17-55-442 | 1 | (TURBO) | | | |
| 55-444B | | LENS,WARNING | | | |
| FC01-55-444 | 1 | | | | |
| 55-448A | | LENS,FRONT | | | |
| FC01-55-447 | 1 | | | | |
| 55-451E | | METER,BOOST & OIL | | | |
| FC17-55-451 | 1 | (TURBO) | | | |
| 55-461 | | TACHOMETER | | | |
| FC01-55-461 | 1 | ((W/O TURBO)>(MT) ) | | | |
| FC07-55-461 | 1 | ((W/O TURBO)>(AT) ) | | | |
| FC17-55-461 | 1 | (TURBO) | | | |
| 55-471 | | SPEEDOMETER | | | |
| FC01-55-471 | 1 | (W/O TURBO) | | | |
| FC17-55-471 | 1 | (TURBO) | | | |
| 55-472 | | KNOB,TRIPMETER | | | |
| 1907-75-102A | 1 | | | | |
| 55-476 | | LENS,INDICATOR | | | |
| FC07-55-452 | 1 | ((W/O TURBO)>(AT) ) | | | |
| 55-489A | | PLATE,LIGHT GUIDE-METER | | | |
| FC01-55-489 | 1 | | | | |
| 55-491A | | METER,FUEL & THERMO | | | |
| FC01-55-481 | 1 | (W/O TURBO) | | | |
| FC17-55-481 | 1 | (TURBO) | | | |
| 55-491C | | METER,OIL & VOLTAGE | | | |
| FC01-55-491 | 1 | (W/O TURBO) | | | |

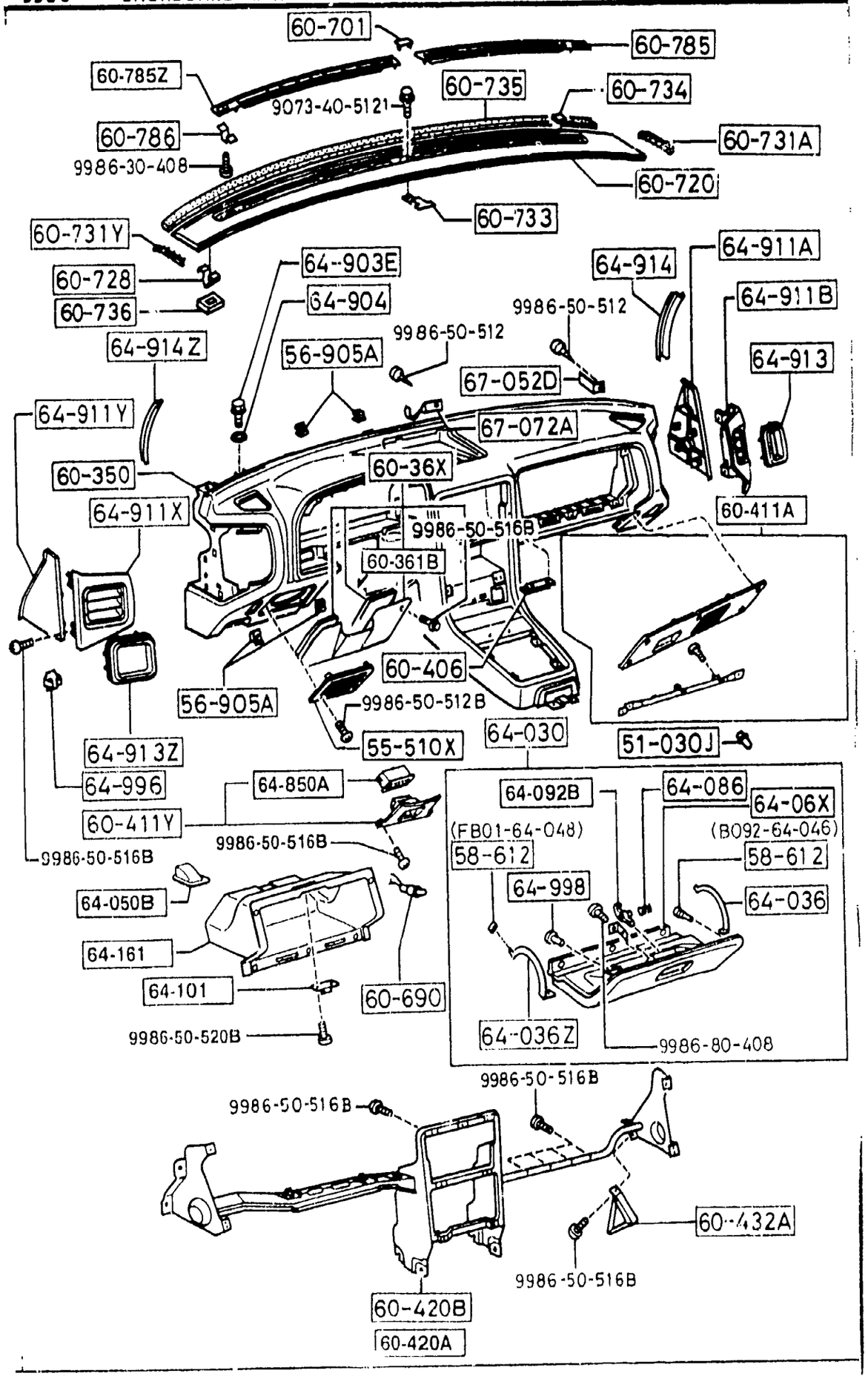


AUFA03



| PART NO. | QTY | MODEL/RESTRICTION | MODEL/RESTRICTION | MODEL/RESTRICTION | FROM-TO |
|---|---|---|---|---|---|
| 51-030J | | BULB | | | |
| 99701-6030 | 1 | 12V 3.4W | | | |
| 55-510X | | GRILLE(L),SPEAKER | | | |
| FB01-60-821 | 1 | (CPE) | | | |
| 02 | INT- | FD8 FE1 BLACK | | | |
| 48 | INT- | FD9 BLUE | | | |
| 56-905A | | NUT,SPRING | | | |
| B092-60-408 | 24 | | | | |
| 58-612 | | CUSHION,RUBBER | | | |
| B092-64-046 | 2 | (CONVERTIBLE) | | | |
| B092-64-046 | 4 | (CPE) | | | |
| FB01-64-048 | 2 | | | | |
| 60-350 | | PAD,CRASH | | | |
| FB01-60-350E | 1 | (CPE) | | | |
| 02 | INT- | FD8 FE1 BLACK | | | |
| 48 | INT- | FD9 BLUE | | | |
| FC66-60-350B | 1 | (CONVERTIBLE) | | | |
| 02 | INT- | FD8 FE1 BLACK | | | |
| 48 | INT- | FD9 BLUE | | | |
| 60-36X | | PAD NO.1,INST PANEL | | | |
| FC66-60-36XB | 1 | (CONVERTIBLE) | | | |
| 02 | INT- | FD8 FE1 BLACK | | | |
| 48 | INT- | FD9 BLUE | | | |
| 60-361B | | PAD NO.1,INST PANEL | | | |
| *FC66-60-361B | 1 | (CONVERTIBLE) | | | |
| * 02 | INT- | FD8 FE1 BLACK | | | |
| * 48 | INT- | FD9 BLUE | | | |
| 60-406 | | BRACKET,CENTER PANEL | | | |
| FB01-55-216A | 1 | | | | |

CAT. AUFA03-07

1993-12

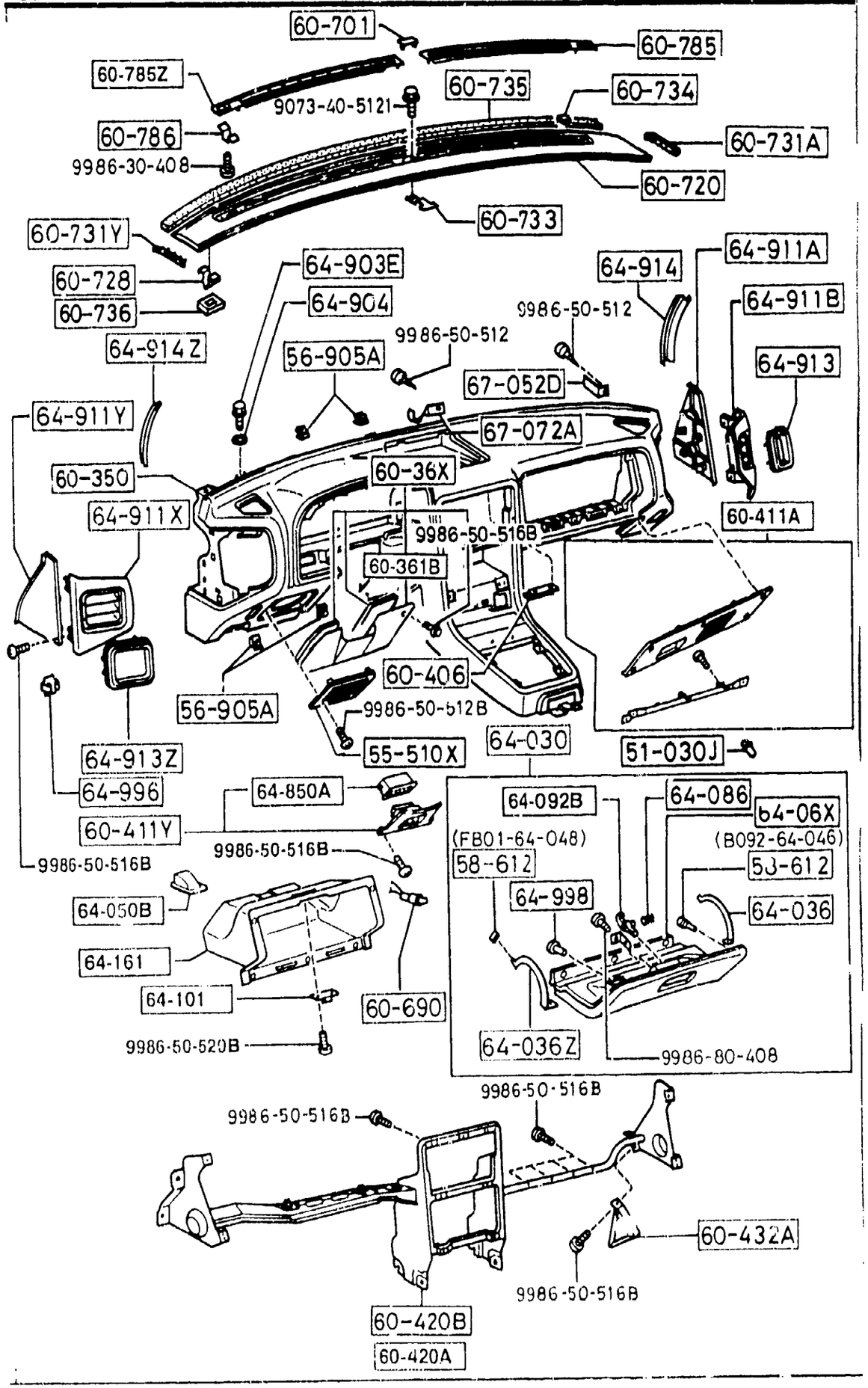


AUFA03



| PART NO. | QTY | MODEL/RESTRICTION | MODEL/RESTRICTION | MODEL/RESTRICTION | FROM-TO |
|---|---|---|---|---|---|
| 60-411A | | PANEL(R),LOWER | | | |
| FC01-64-250A | 1 | | | | |
| 02 | INT- | FD8 FE1 BLACK | | | |
| 48 | INT- | FD9 BLUE | | | |
| 60-411Y | | PANEL(L),LOWER | | | |
| FB01-64-270A | 1 | (CPE) | | | |
| 02 | INT- | FD8 FE1 BLACK | | | |
| 48 | INT- | FD9 BLUE | | | |
| 60-420A | | FRAME,INST.PANEL | | | |
| FC01-60-420B | 1 | (CPE) | | | |
| 60-420B | | MEMBER,CRASH PAD | | | |
| FC66-60-420B | 1 | (CONVERTIBLE) | | | |
| 60-432A | | BRACKET NO.2 | | | |
| FB01-60-635 | 1 | (CONVERTIBLE) | | | |
| 60-690 | | SWITCH,GLOVE TRAY | | | |
| FA54-66-540 | 1 | | | | |
| 60-701 | | CAP,GARNISH | | | |
| FB01-64-905 | 1 | | | | |
| 02 | INT- | FD8 FE1 BLACK | | | |
| 48 | INT- | FD9 BLUE | | | |
| 60-720 | | GARNISH,UPPER | | | |
| FB01-60-720A | 1 | | | | |
| 02 | INT- | FD8 FE1 BLACK | | | |
| 48 | INT- | FD9 BLUE | | | |
| 60-728 | | CLIP,GARNISH-INST. | | | |
| FB01-60-728A | 6 | | | | |
| 60-731A | | COVER(R),GARNISH-INST. | | | |
| FB01-60-731A | 1 | | | | |
| 02 | INT- | FD8 FE1 BLACK | | | |
| 48 | INT- | FD9 BLUE | | | |

CAT. AUFA03-07

1993-12

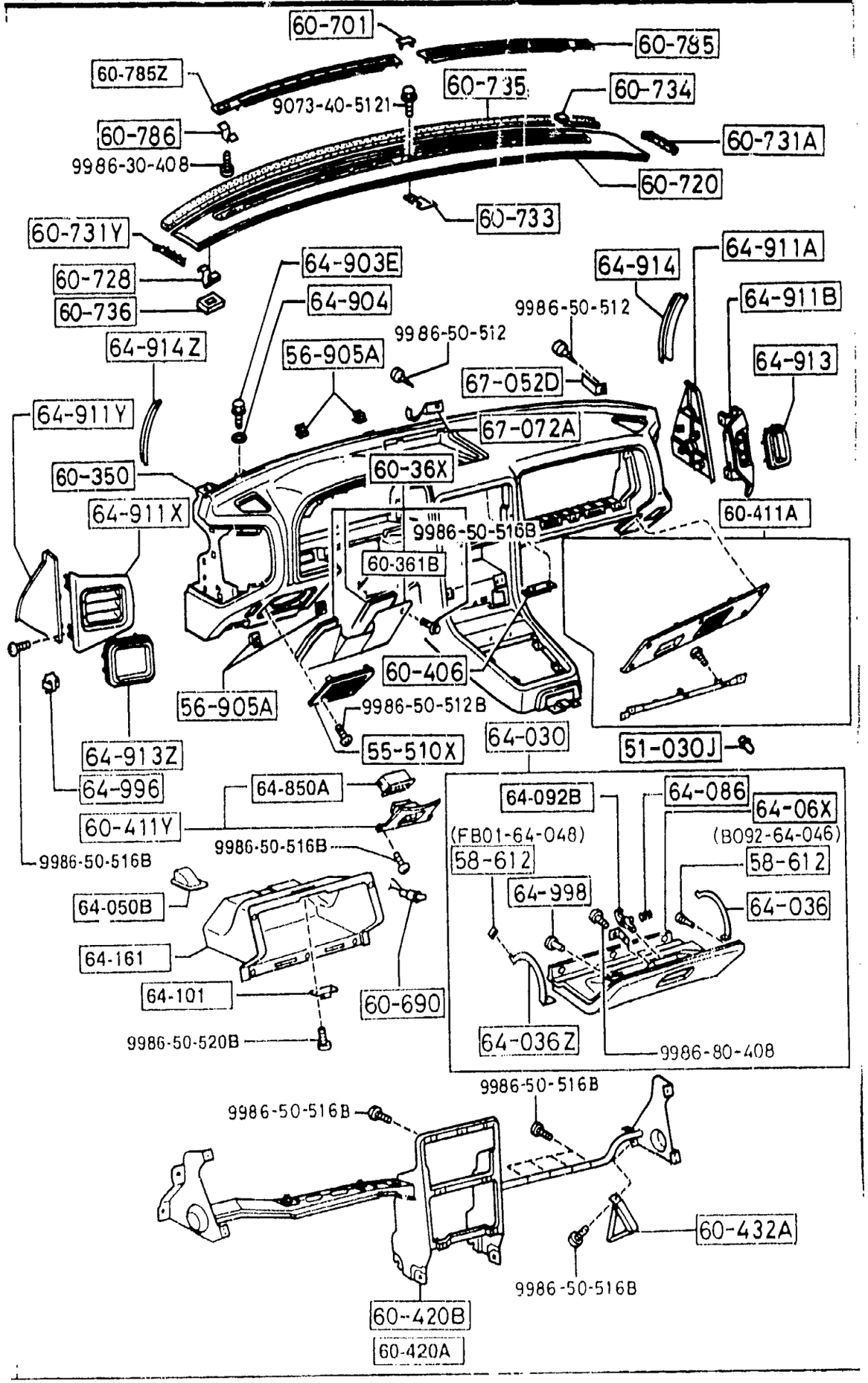


AUFA03



| PART NO. | QTY | MODEL/RESTRICTION | MODEL/RESTRICTION | MODEL/RESTRICTION | FROM-TO |
|---|---|---|---|---|---|
| 60-731Y | | COVER(L),GARNISH-INST. | | | |
| FB01-60-732A | 1 | | | | |
| 02 | INT- | FD8 FE1 BLACK | | | |
| 48 | INT- | FD9 BLUE | | | |
| 60-733 | | BRACKET,GARNISH-INST. | | | |
| FB01-60-733 | 1 | | | | |
| 60-734 | | PAD NO.1,GARNISH-UPPER | | | |
| FB01-60-734A | 4 | | | | |
| 60-735 | | PAD NO.2,GARNISH-UPPER | | | |
| FB01-60-735 | 1 | | | | |
| 60-736 | | RUBBER,CUSHION-GARNISH | | | |
| FB01-60-736 | 6 | | | | |
| 60-785 | | GRILLE(R),DEF.NOZZLE | | | |
| FB67-60-785A | 1 | | | | |
| 02 | INT- | FD8 FE1 BLACK | | | |
| 48 | INT- | FD9 BLUE | | | |
| 60-785Z | | GRILLE(L),DEF.NOZZLE | | | |
| FB01-60-795B | 1 | | | | |
| 02 | INT- | FD8 FE1 BLACK | | | |
| 48 | INT- | FD9 BLUE | | | |
| 60-786 | | CLIP,DEFROSTER GRILLE | | | |
| FB01-60-786A | 4 | | | | |
| 64-030 | | BOX,GLOVE | | | |
| FC01-64-030 | 1 | (CPE) | | | |
| 02 | INT- | FD8 FE1 BLACK | | | |
| 48 | INT- | FD9 BLUE | | | |
| FC33-64-030 | 1 | (CONVERTIBLE) | | | |
| 02 | INT- | FD8 FE1 BLACK | | | |
| 48 | INT- | FD9 BLUE | | | |

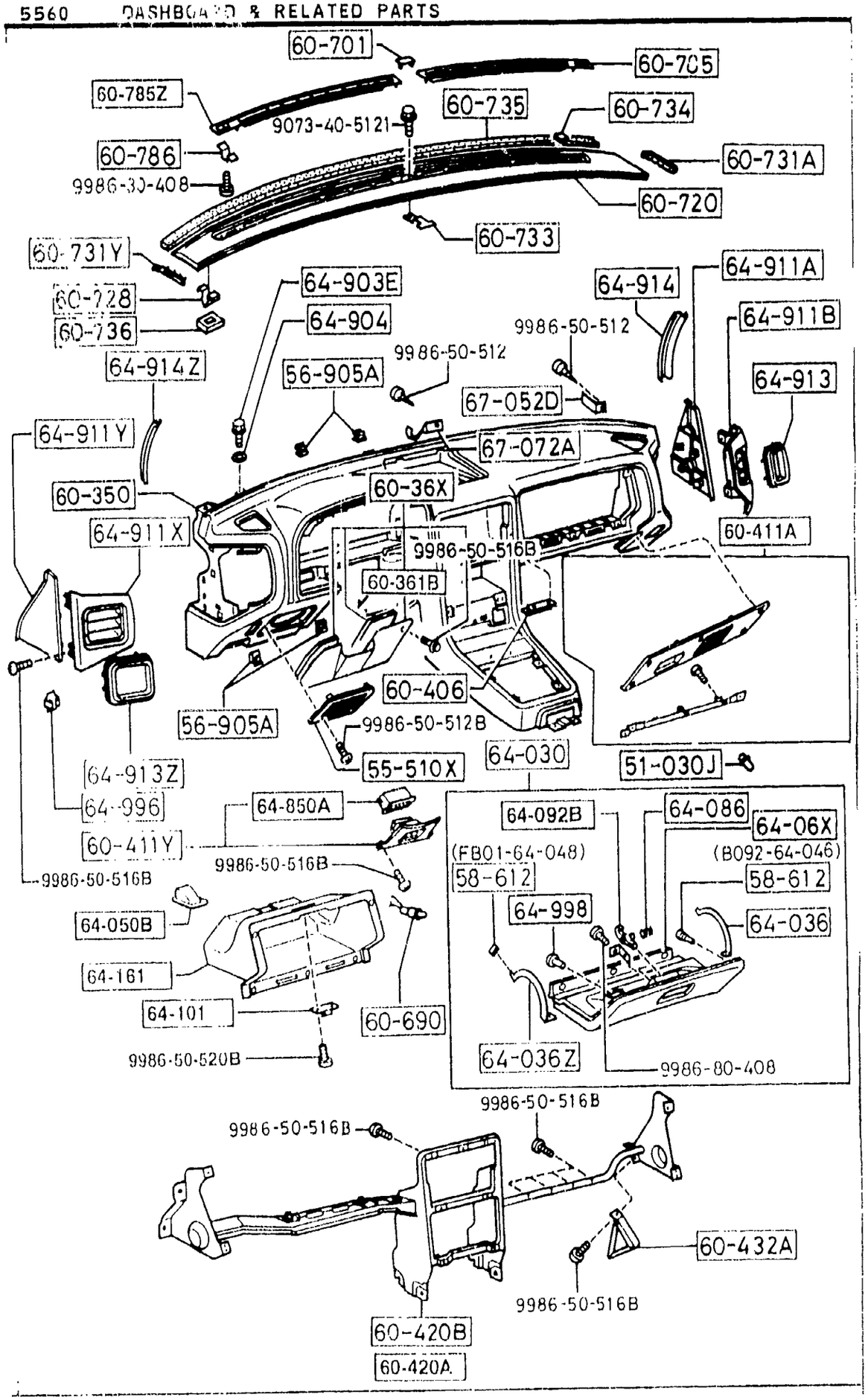


AUFA03

5560 -4 DASHBOARD & RELATED PARTS

| PART NO. | QTY | MODEL/RESTRICTION | MODEL/RESTRICTION | MODEL/RESTRICTION | FROM-TO |
|---|---|---|---|---|---|
| 64-036 | | STOPPER(R),GLOVE LID | | | |
| FB01-64-043 | 1 | | | | |
| 64-036Z | | STOPPER(L),GLOVE LID | | | |
| FB01-64-044 | 1 | | | | |
| 64-050B | | BOX,BULB | | | |
| H043-64-050 | 1 | | | | |
| 64-06X | | HINGE,GLOVE LID | | | |
| FC01-64-06X | 1 | (CPE) | | | |
| 64-086 | | SPRING,GLOVE LID | | | |
| FB67-64-049 | 1 | | | | |
| 64-092B | | HOOK,GLOVE LID | | | |
| HF05-64-092 | 1 | | | | |
| 64-101 | | STRIKER | | | |
| FB67-64-10X | 1 | | | | |
| 64-161 | | BOX,GLOVE | | | |
| FB01-64-161A | 1 | BASE,<br>(W/O FLOCKS TRIM)<br>(CPE) | | | |
| FB02-64-161A | 1 | BASE-OPT, TURBO,<br>(W/FLOCKS TRIM)<br>(CPE) | | | |
| FB67-64-161A | 1 | (CONVERTIBLE) | | | |
| 64-850A | | LOUVER,LAP-LOWER PAN<br>EL | | | |
| FB01-64-850 | 1 | (CPE) | | | |
| 02 | INT- | FD8 FE1 BLACK | | | |
| 48 | INT- | FD9 BLUE | | | |
| 64-903E | | BOLT | | | |
| BE32-64-903 | 2 | | | | |
| 64-904 | | WASHER,RUBBER | | | |
| BE32-64-904 | 2 | | | | |

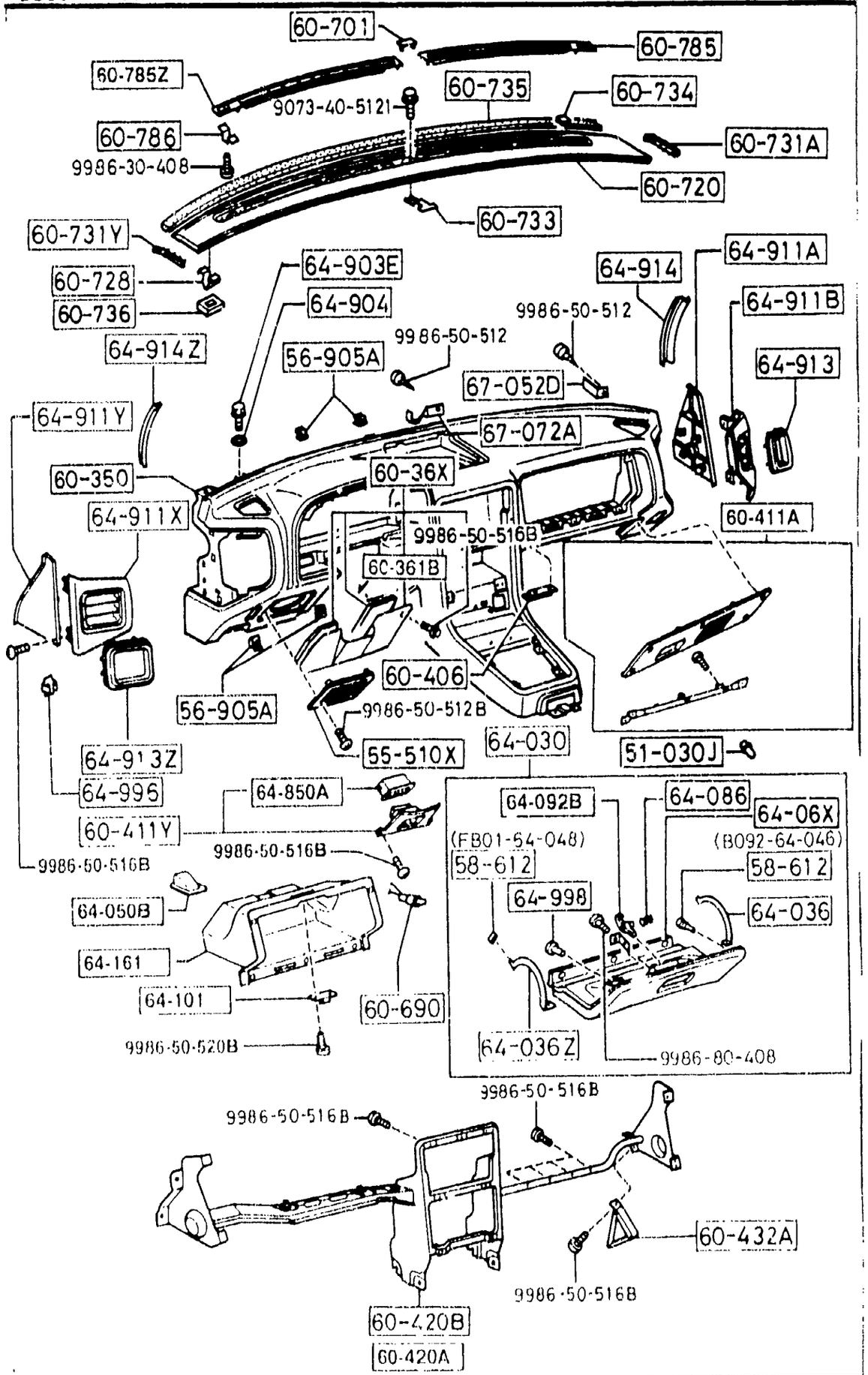


AUFA03



| PART NO. | QTY | MODEL/RESTRICTION | MODEL/RESTRICTION | MODEL/RESTRICTION | FROM-TO |
|---|---|---|---|---|---|
| 64-911A | | COVER(R),SIDE | | | |
| FB01-64-912 | 1 | | | | |
| 02 | INT- | FD8 FE1 BLACK | | | |
| 48 | INT- | FD9 BLUE | | | |
| 64-911B | | PANEL(R),SIDE-CRASH PAD | | | |
| FB01-64-911A | 1 | | | | |
| 02 | INT- | FD8 FE1 BLACK | | | |
| 48 | INT- | FD9 BLUE | | | |
| 64-911X | | PANEL(L),SIDE-CRASH PAD | | | |
| FB01-64-921A | 1 | | | | |
| 02 | INT- | FD8 FE1 BLACK | | | |
| 48 | INT- | FD9 BLUE | | | |
| 64-911Y | | COVER(L),SIDE | | | |
| FB01-64-922 | 1 | | | | |
| 02 | INT- | FD8 FE1 BLACK | | | |
| 48 | INT- | FD9 BLUE | | | |
| 64-913 | | RUBBER(R),SEAL-SIDE PANEL | | | |
| FB01-64-913 | 1 | | | | |
| 64-913Z | | RUBBER(L),SEAL-SIDE PANEL | | | |
| FB01-64-923 | 1 | | | | |
| 64-914 | | COVER(R),SIDE NO.2 | | | |
| FB01-64-914 | 1 | | | | |
| 02 | INT- | FD8 FE1 BLACK | | | |
| 48 | INT- | FD9 BLUE | | | |
| 64-914Z | | COVER(L),SIDE NO.2 | | | |
| FB01-64-924 | 1 | | | | |
| 02 | INT- | FD8 FE1 BLACK | | | |
| 48 | INT- | FD9 BLUE | | | |
| 64-996 | | NUT,EXPANSION | | | |
| H043-64-996A | 11 | (CPE) | | | |

CAT. AUFA03-07

1993-12

## 5560 DASHBOARD & RELATED PARTS

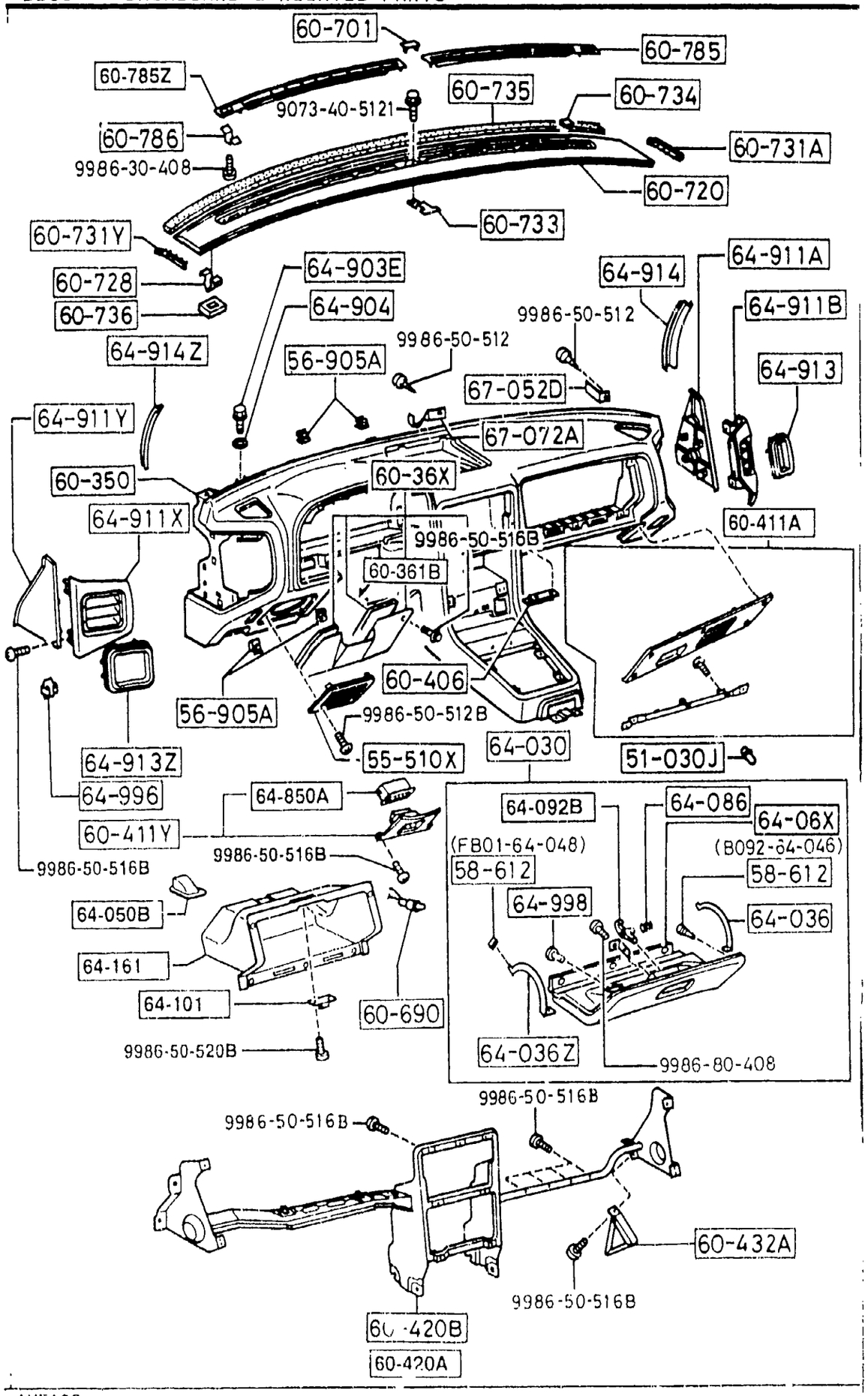


| PART NO. | QTY | MODEL/RESTRICTION | MODEL/RESTRICTION | MODEL/RESTRICTION | FROM-TO |
|---|---|---|---|---|---|
| CONT'D | | | | | |
| H043-64-996A | 13 | (CONVERTIBLE) | | | |
| 64-998 | | SCREW,GLOVE LID | | | |
| H199-64-998 | 10 | | | | |
| 67-052D | | CLIP | | | |
| 8545-67-052 | 1 | | | | |
| 67-072A | | CLIP | | | |
| GC77-67-072 | 2 | | | | |

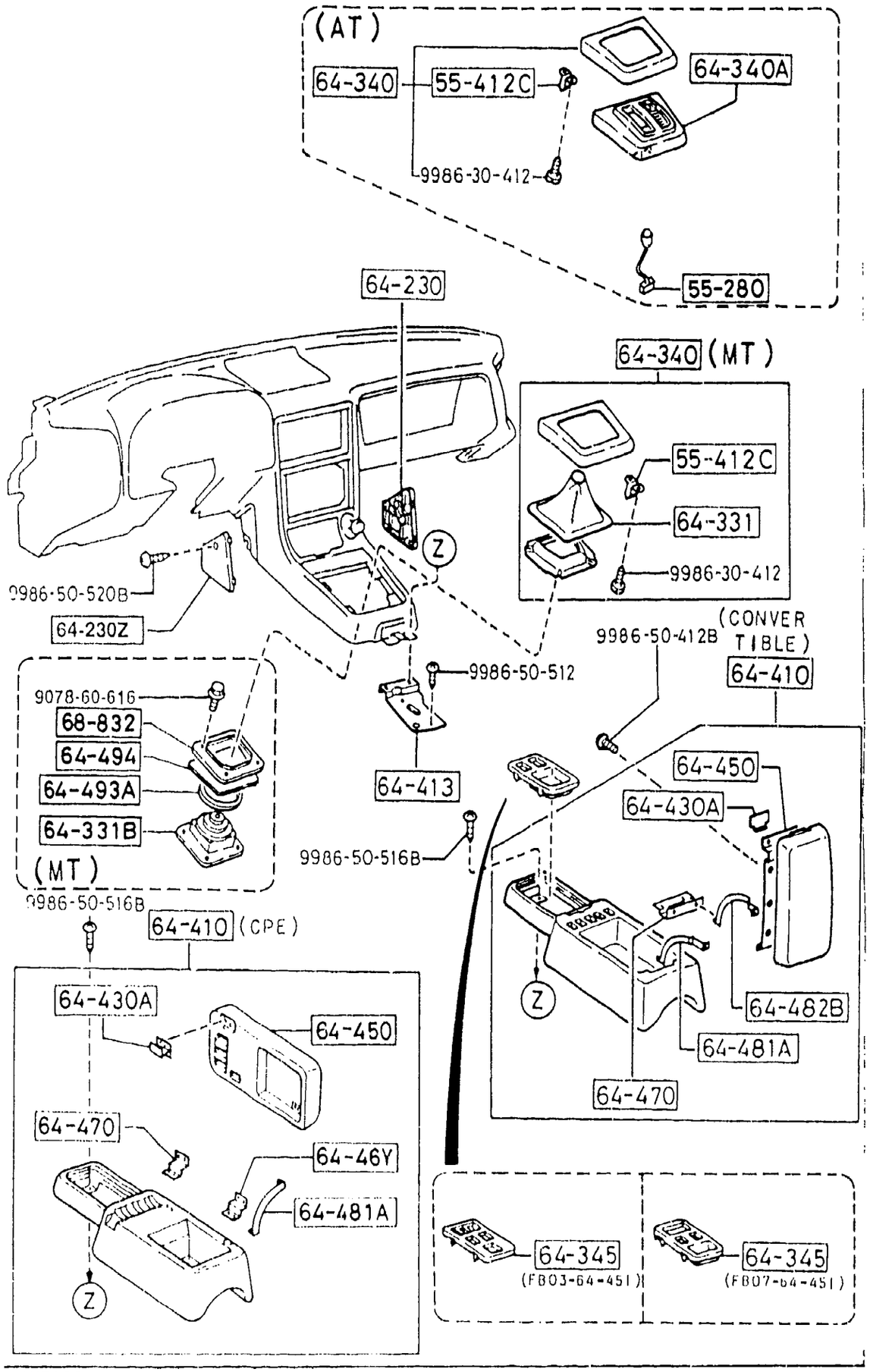


| PART NO. | QTY | MODEL/RESTRICTION | MODEL/RESTRICTION | MODEL/RESTRICTION | FROM-TO |
|---|---|---|---|---|---|
| 55-280 | | BULB & SOCKET | | | |
| FC07-55-280 | 1 | (AT) | | | |
| 55-412C | | SPRING | | | |
| 8531-55-412 | 4 | (AT) | | | |
| 64-230 | | WALL(R),SIDE | | | |
| FB01-64-221A | 1 | | | | |
| 02 | INT- | FD8 FE1 BLACK | | | |
| 48 | INT- | FD9 BLUE | | | |
| 64-230Z | | WALL(L),SIDE | | | |
| FB01-64-231A | 1 | | | | |
| 02 | INT- | FD8 FE1 BLACK | | | |
| 48 | INT- | FD9 BLUE | | | |
| 64-331 | | BOOT,CHANGE | | | |
| FC01-64-331 | 1 | (MT) | | | |
| 64-331B | | BOOT,CHANGE | | | |
| FB01-64-490B | 1 | (MT) | | | |
| 64-340 | | PLATE,UPPER | | | |
| FC01-64-340B | 1 | (MT) | | | |
| FC07-64-390A | 1 | (AT) | | | |
| 64-340A | | INDICATOR | | | |
| FC07-64-350E | 1 | (AT) | | | |
| 64-345 | | PANEL,SWITCH | | | |
| FB03-64-451 | 1 | (CPE) | | | |
| FB07-64-451 | 1 | (CONVERTIBLE) | | | |
| 64-410 | | CONSOLE,REAR | | | |
| FB02-64-410C | 1 | (CONVERTIBLE) | | | |
| 02 | INT- | FD8 FE1 BLACK | | | |
| 48 | INT- | FD9 BLUE | | | |
| FC01-64-410B | 1 | ((CPE))(W/O RR WIPER) ) | | | |

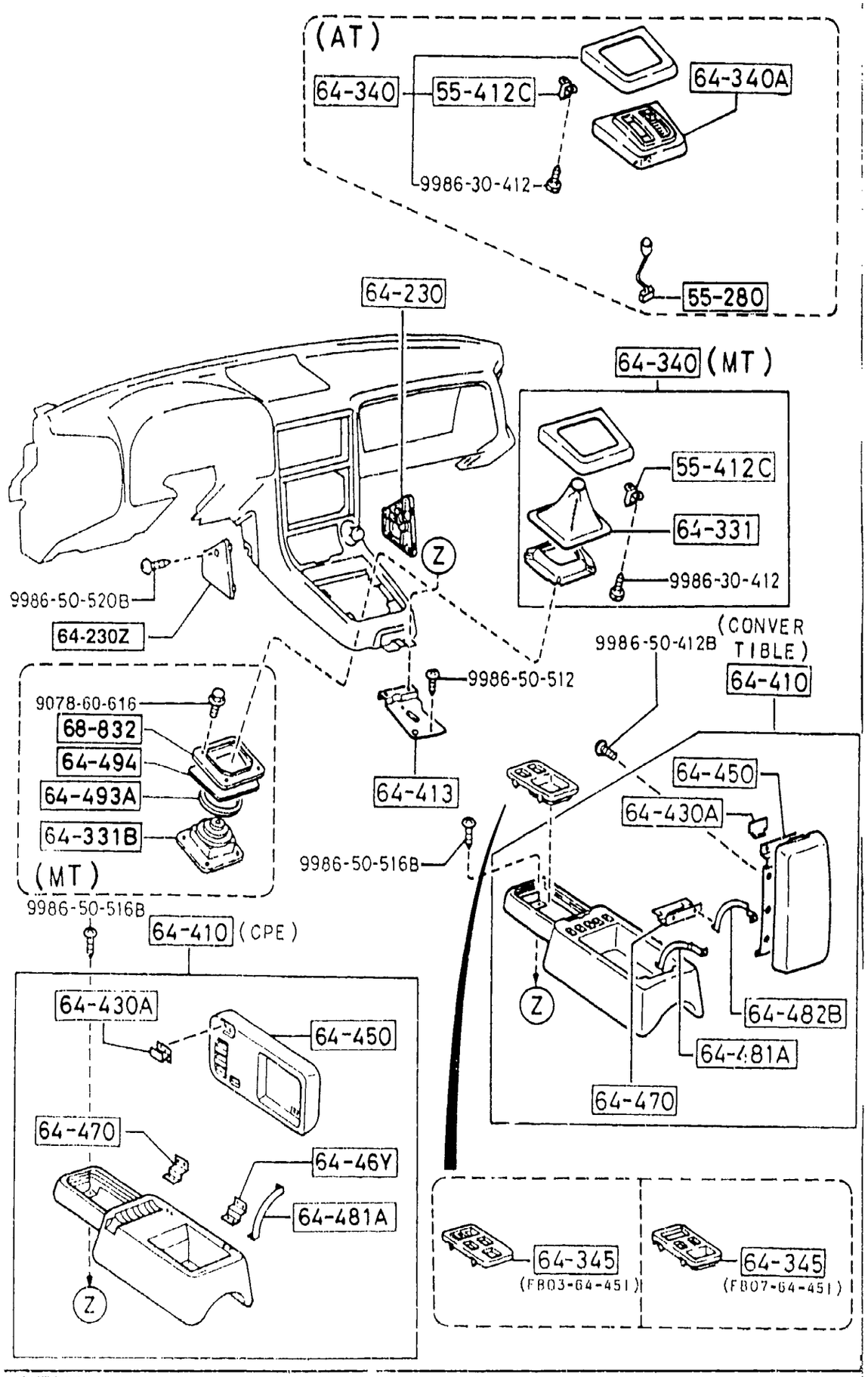


| PART NO. | QTY | MODEL/RESTRICTION | MODEL/RESTRICTION | MODEL/RESTRICTION | FROM-TO |
|---|---|---|---|---|---|
| CONT'D | | | | | |
| 02 | INT- | FD8 FE1 BLACK | | | |
| 48 | INT- | FD9 BLUE | | | |
| FC02-64-410B | 1 | ((CPE))(W/RR WIPER)) | | | |
| 02 | INT- | FD8 FE1 BLACK | | | |
| 48 | INT- | FD9 BLUE | | | |
| 64-413 | | BRACKET,CONSOLE-NO.1 | | | |
| FB01-64-44X | 1 | | | | |
| 64-430A | | LOCK,CONSOLE-REAR | | | |
| FC01-64-43Y | 1 | (CPE) | | | |
| FB01-64-430 | 1 | (CONVERTIBLE) | | | |
| 64-450 | | LID,CONSOLE | | | |
| FB01-64-440B | 1 | (CONVERTIBLE) | | | |
| 02 | INT- | FD8 FE1 BLACK | | | |
| 48 | INT- | FD9 BLUE | | | |
| FC01-64-450A | 1 | (CPE) | | | |
| 02 | INT- | FD8 FE1 BLACK | | | |
| 48 | INT- | FD9 BLUE | | | |
| 64-46Y | | HINGE,CONSOLE LID-RR | | | |
| FC01-64-46X | 1 | (CPE) | | | |
| 64-470 | | HINGE | | | |
| FB01-64-45X | 1 | (CONVERTIBLE) | | | |
| 02 | INT- | FD8 FE1 BLACK | | | |
| 48 | INT- | FD9 BLUE | | | |
| FC01-64-45X | 1 | (CPE) | | | |
| 64-481A | | STOPPER,CONSOLE LID | | | |
| FB01-64-452 | 1 | (CONVERTIBLE) | | | |
| FC01-64-452 | 1 | (CPE) | | | |
| 64-482B | | STOPPER,CONSOLE LID | | | |
| FB01-64-453 | 1 | (CONVERTIBLE) | | | |

5570 CONSOLE

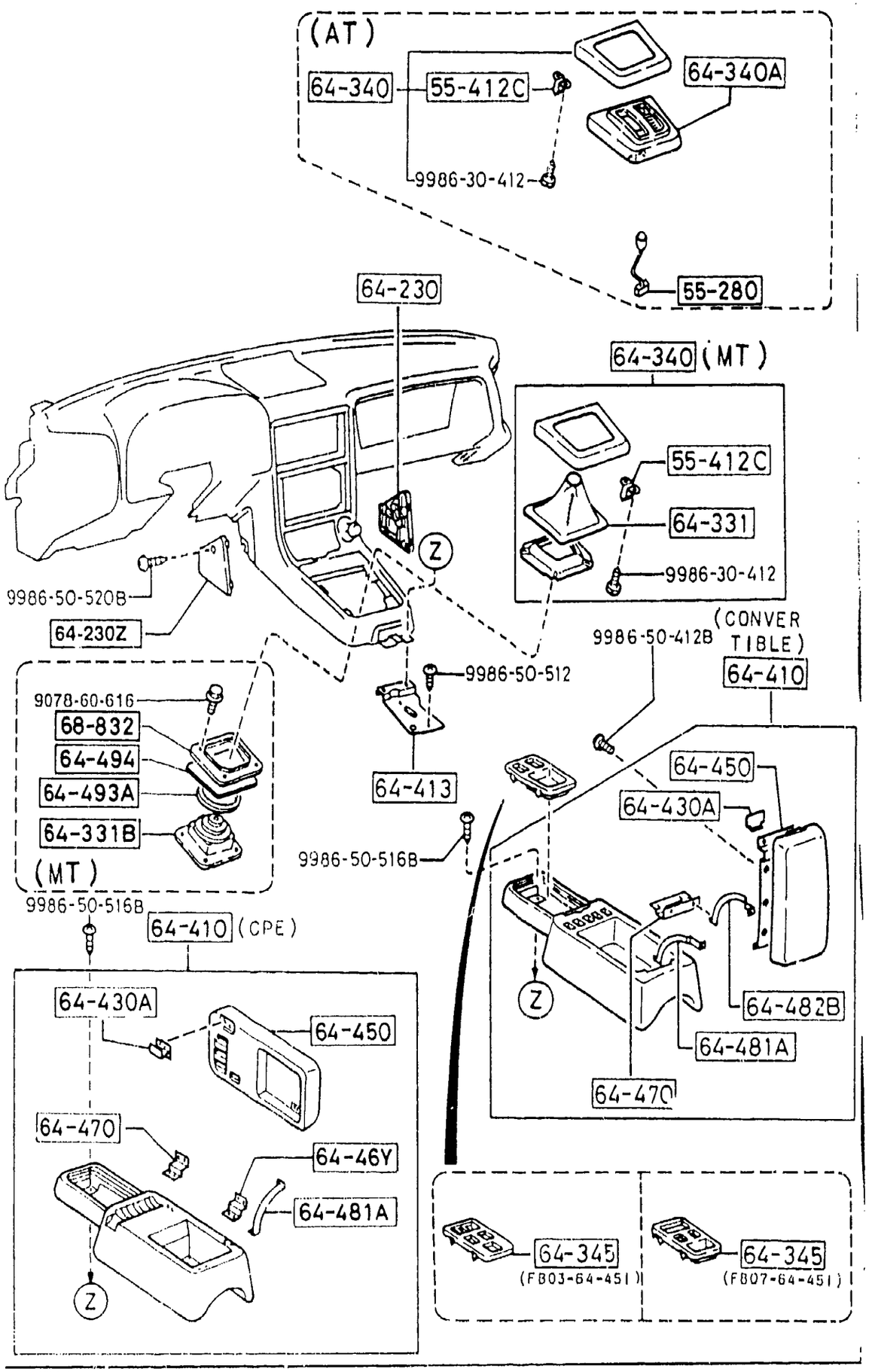


| PART NO. | QTY | MODEL/RESTRICTION | MODEL/RESTRICTION | MODEL/RESTRICTION | FROM-TO |
|---|---|---|---|---|---|
| 64-493A | | PACK,SILENT | | | |
| H001-64-493 | 1 | (MT) | | | |
| 64-494 | | PAD,CHANGE BOOT | | | |
| FB01-64-495 | 1 | (MT) | | | |
| 68-832 | | SHEET,BOOT | | | |
| FB01-64-491 | 1 | (MT) | | | |

AUFA03

CAT. AUFA03-07

1993-12

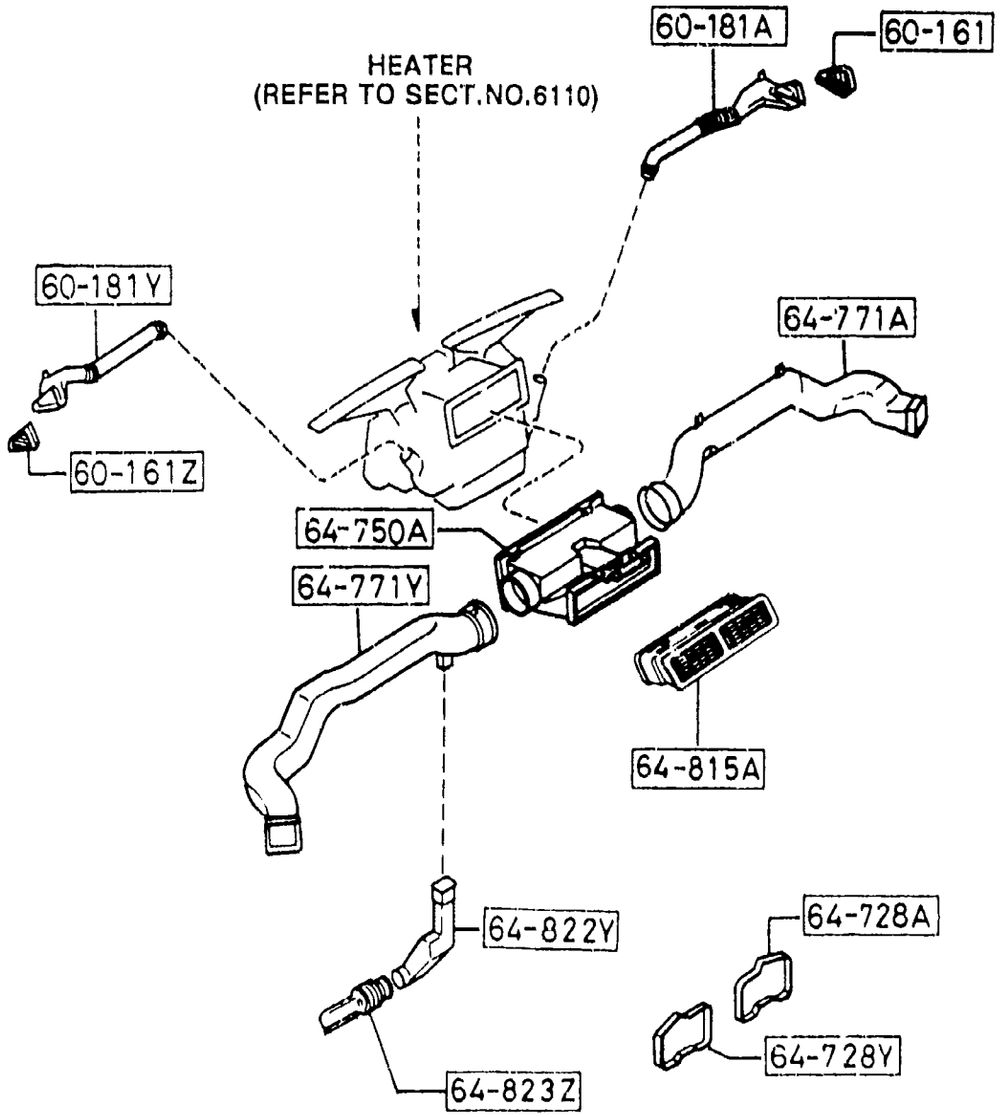


| PART NO. | QTY | MODEL/RESTRICTION | MODEL/RESTRICTION | MODEL/RESTRICTION | FROM-TO |
|---|---|---|---|---|---|
| 60-161 | | GRILLE(R),DEMISTER | | | |
| FB01-60-161A | 1 | | | | |
| 02 | INT- | FD8 FE1 BLACK | | | |
| 48 | INT- | FD9 BLUE | | | |
| 60-161Z | | GRILLE(L),DEMISTER | | | |
| FB01-60-171A | 1 | | | | |
| 02 | INT- | FD8 FE1 BLACK | | | |
| 48 | INT- | FD9 BLUE | | | |
| 60-181A | | DUCT(R),SIDE DEMIST. | | | |
| FB01-60-181 | 1 | | | | |
| 60-181Y | | DUCT(L),SIDE DEMIST. | | | |
| FB01-60-191 | 1 | | | | |
| 64-728A | | GASKET(R) | | | |
| FB01-64-728 | 1 | (CPE) | | | |
| 64-728Y | | GASKET(L) | | | |
| FB01-64-828 | 1 | (CPE) | | | |
| 64-750A | | DUCT,CENTER | | | |
| FB01-61-161 | 1 | | | | |
| 64-771A | | DUCT NO.1(R) | | | |
| FC01-64-760 | 1 | | | | |
| 64-771Y | | DUCT NO.1(L) | | | |
| FB01-64-770 | 1 | (CPE) | | | |
| FC66-64-770 | 1 | (CONVERTIBLE) | | | |
| 64-815A | | LOUVER,CENTER | | | |
| FC01-64-840 | 1 | | | | |
| 64-822Y | | DUCT NO.1(L),LAP-VENT. | | | |
| FC01-64-832 | 1 | (CPE) | | | |
| 64-823Z | | DUCT NO.2(L),LAP VENT. | | | |
| FC01-64-833 | 1 | (CPE) | | | |

(THIS ILLUSTRATION CONSISTS OF 4 PAGES)

| GRADE / SEAT TYPE | | BASE | BASE-OPT-1 |
|---|---|---|---|
| | | STA | STC |
| SEAT TRIM | | CLOTH 'A' | CLOTH 'B' |
| | | 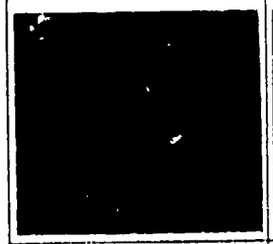 | 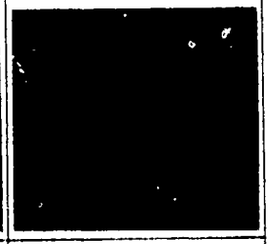 |
| | | 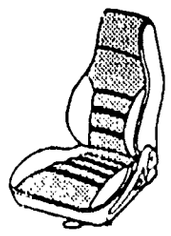 | 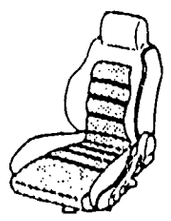 |
| SEAT BACK TYPE | HIGH | × | – |
| | LOW | – | × |
| SWING PILLOW | | – | × |
| LIFT | | – | × |
| LUMBER SUPPORT | | – | × |



(THIS ILLUSTRATION CONSISTS OF 4 PAGES)

| BASE-OPT-2 | TURBO | TURBO-OPT |
|---|---|---|
| STE | STG | STI |
| LEATHER | CLOTH 'D' | LEATHER |
|  |  |  |
| 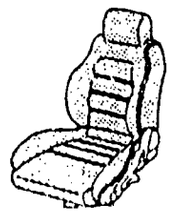 | 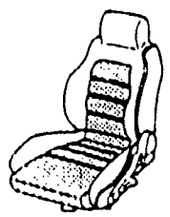 | 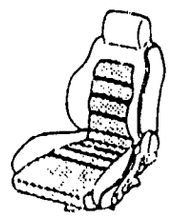 |
| – | × | × |
| × | – | – |
| × | – | – |
| × | – | – |
| × | – | – |



AUFA03 (CONT'D)

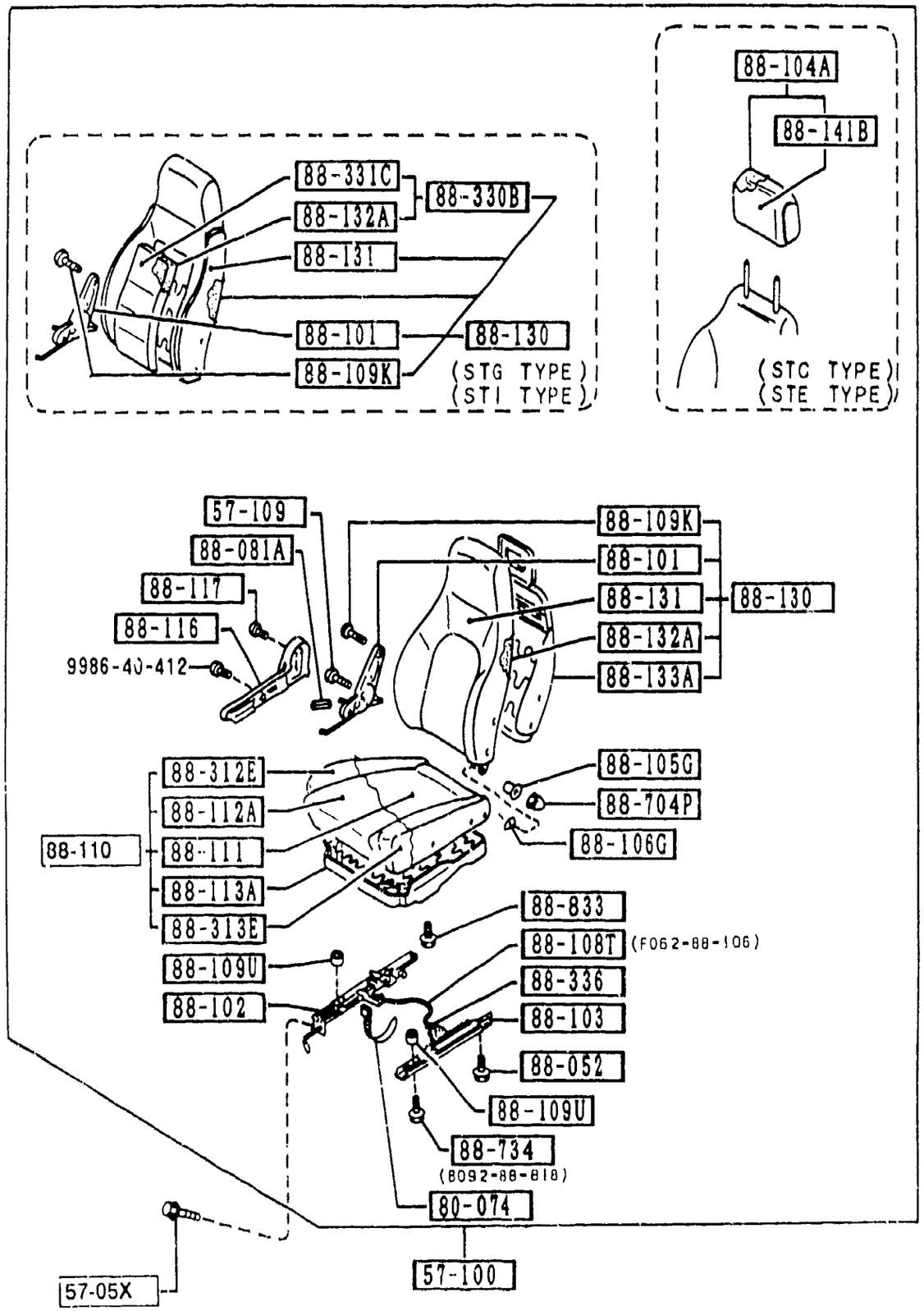
88-104A
88-141B
88-331C
88-330B
88-132A
88-131
88-101
88-130
88-109K
(STG TYPE)
(STI TYPE)
(STC TYPE)
(STE TYPE)
57-109
88-081A
88-117
88-116
9986-40-412
88-109K
88-101
88-131
88-130
88-132A
88-133A
88-312E
88-112A
88-110
88-111
88-113A
88-313E
88-105G
88-704P
88-106G
88-833
88-108T
(F062-88-106)
88-109U
88-102
88-336
88-103
88-052
88-109U
88-734
(8092-88-818)
80-074
57-100
57-05X





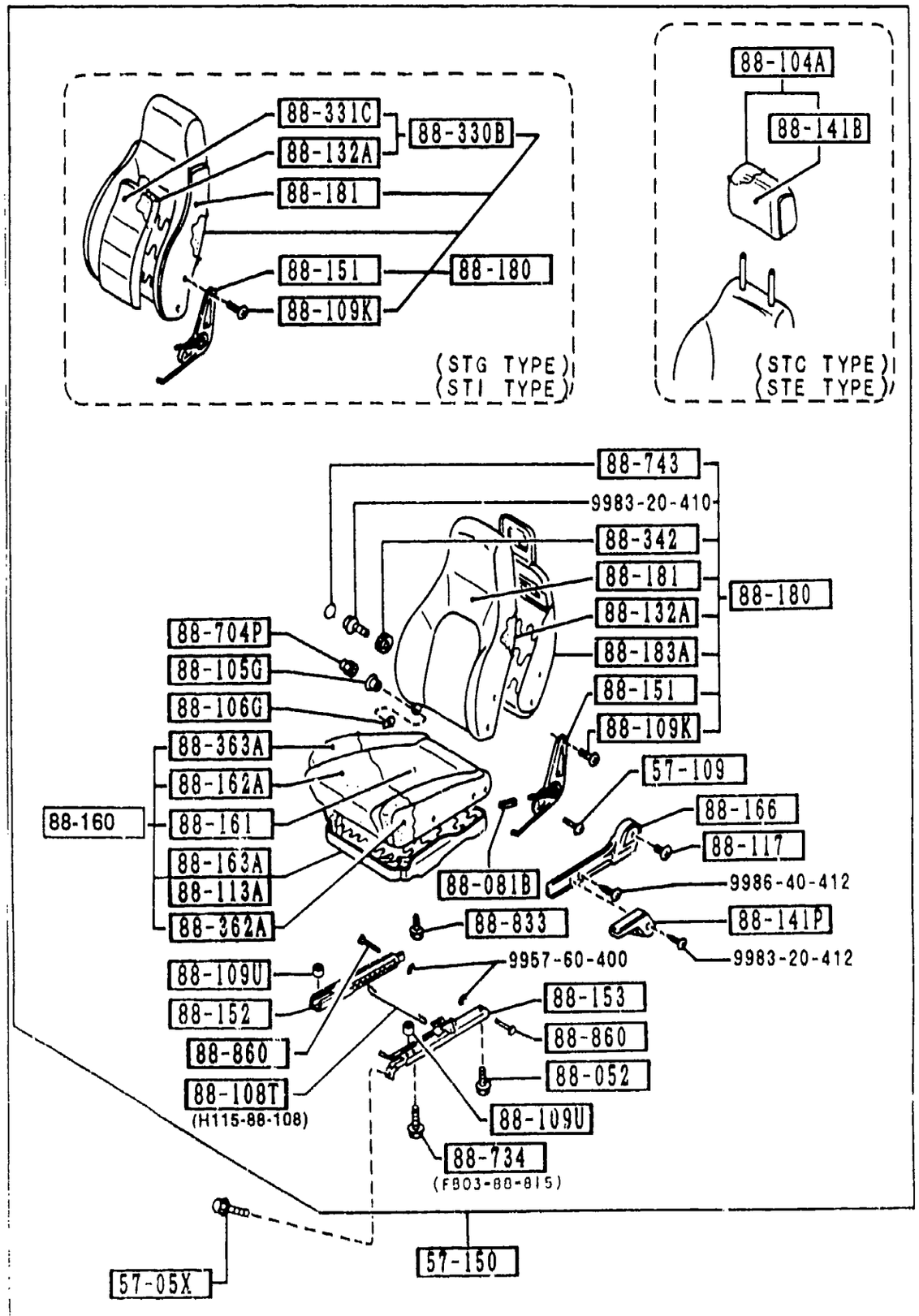
88-104A
88-141B
88-331C
88-330B
88-132A
88-181
88-151
88-180
88-109K
(STG TYPE)
(STI TYPE)
(STC TYPE)
(STE TYPE)
88-743
9983-20-410
88-342
88-181
88-180
88-132A
88-183A
88-151
88-109K
88-704P
88-105G
88-106G
88-363A
88-162A
88-160
88-161
88-163A
88-113A
88-362A
57-109
88-166
88-117
88-081B
9986-40-412
88-141P
88-833
9983-20-412
9957-60-400
88-109U
88-152
88-860
88-108T
(H115-88-108)
88-153
88-860
88-052
88-109U
88-734
(F803-88-815)
57-150
57-05X

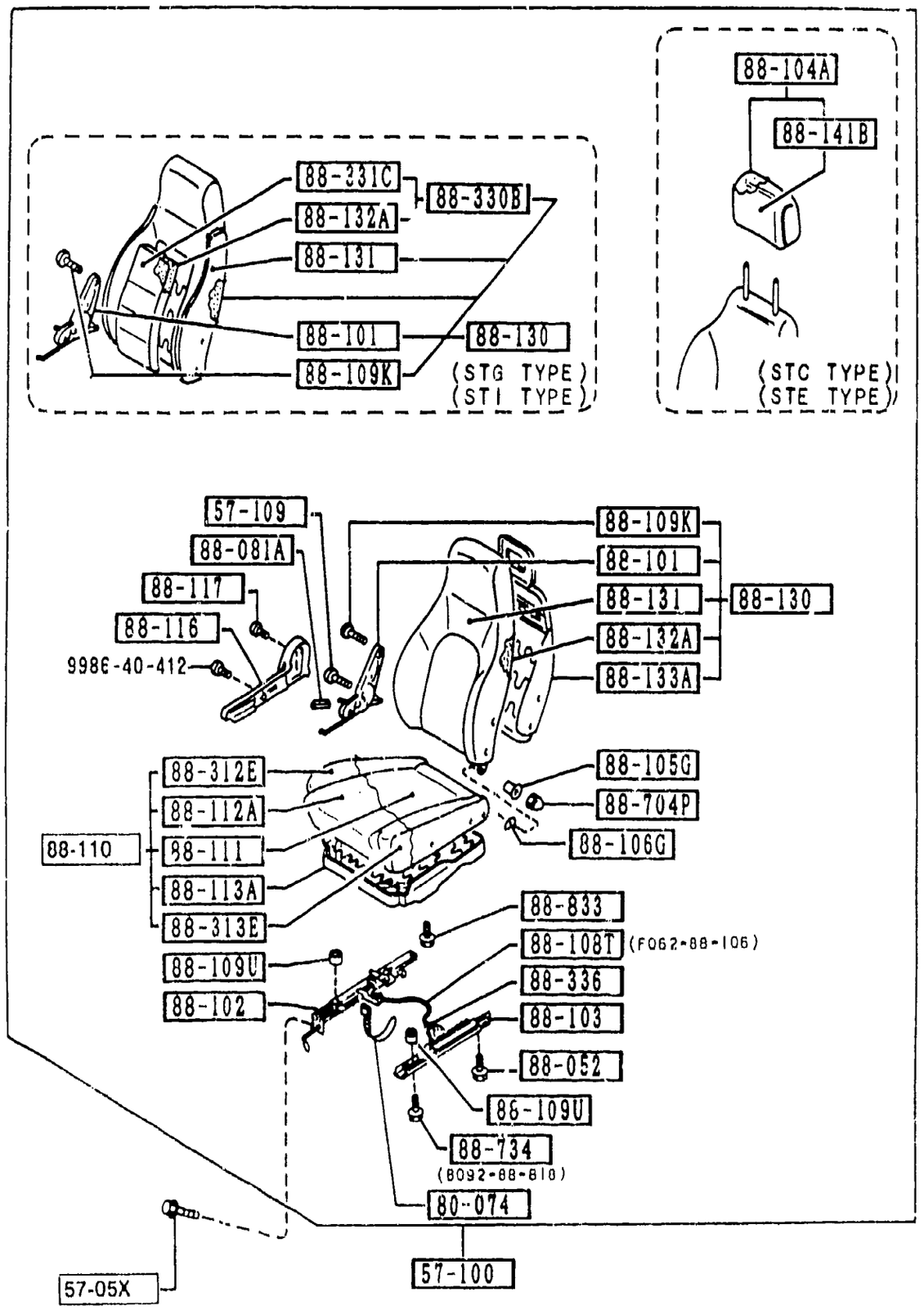




| PART NO. | QTY | MODEL/RESTRICTION | MODEL/RESTRICTION | MODEL/RESTRICTION | FROM-TO |
|---|---|---|---|---|---|
| 57-05X | | BOLT,LINK | | | |
| B455-57-05X | 8 | | | | |
| 57-100 | | SEAT(R),FRONT | | | |
| FCY4-57-100 | 1 | BASE-OPT-2.<br>(STE TYPE) | | | |
| 02 | INT- | FD8 BLACK | | | |
| 48 | INT- | FD9 BLUE | | | |
| FCY5-57-100 | 1 | TURBO-OPT,<br>(STI TYPE) | | | |
| 02 | INT- | FD8 BLACK | | | |
| 48 | INT- | FD9 BLUE | | | |
| FC11-57-100C | 1 | BASE,<br>(STA TYPE) | | | |
| 02 | INT- | FD8 BLACK | | | |
| 48 | INT- | FD9 BLUE | | | |
| FC13-57-100C | 1 | BASE-OPT-1,<br>(STC TYPE) | | | |
| 02 | INT- | FD8 BLACK | | | |
| 48 | INT- | FD9 BLUE | | | |
| FC17-57-100B | 1 | TURBO,<br>(STG TYPE) | | | |
| 02 | INT- | FD8 BLACK | | | |
| 48 | INT- | FD9 BLUE | | | |
| 57-109 | | SCREW,KNUCKLE | | | |
| 0259--57-109 | 4 | | | | |
| 57-150 | | SEAT(L),FRONT | | | |
| FCY4-57-150 | 1 | BASE-OPT-2,<br>(STE TYPE) | | | |
| 02 | INT- | FD8 BLACK | | | |
| 48 | INT- | FD9 BLUE | | | |
| FCY5-57-150 | 1 | TURBO-OPT,<br>(STI TYPE) | | | |
| 02 | INT- | FD8 BLACK | | | |
| 48 | INT- | FD9 BLUE | | | |
| FC11-57-150B | 1 | BASE,<br>(STA TYPE) | | | |
| 02 | INT- | FD8 BLACK | | | |

(THIS ILLUSTRATION CONSISTS OF 4 PAGES)

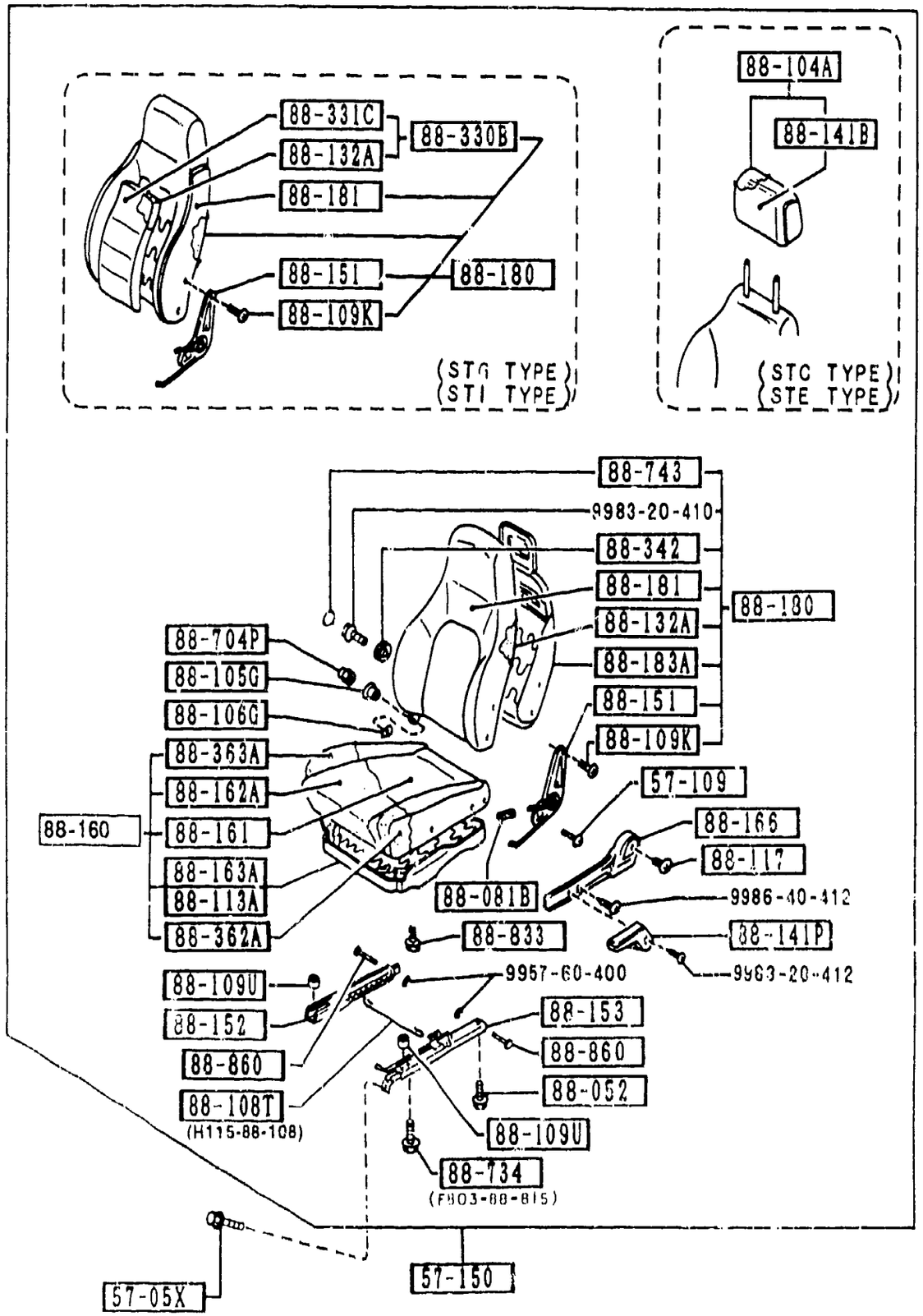




| PART NO. | QTY | MODEL/RESTRICTION | MODEL/RESTRICTION | MODEL/RESTRICTION | FROM-TO |
|---|---|---|---|---|---|
| CONT'D | | | | | |
| 48 | INT- | FD9 BLUE | | | |
| FC13-57-150B | 1 | BASE-OPT-1, (STC TYPE) | | | |
| 02 | INT- | FD8 BLACK | | | |
| 48 | INT- | FD9 BLUE | | | |
| FC17-57-150A | 1 | TURBO, (STG TYPE) | | | |
| 02 | INT- | FD8 BLACK | | | |
| 48 | INT- | FD9 BLUE | | | |
| 80-074 | | BAND | | | |
| 3966-88-116 | 1 | | | | |
| 88-052 | | BOLT | | | |
| B093-88-818 | 2 | BASE-OPT-1, BASE-OPT-2, (STC TYPE) (STE TYPE) | | | |
| B093-88-818 | 4 | BASE, TURBO, TURBO-OPT, (STA TYPE) (STG TYPE) (STI TYPE) | | | |
| 88-081A | | KNOB(R),KNUCKLE | | | |
| B001-88-081 | 1 | | | | |
| 02 | INT- | FD8 BLACK | | | |
| 48 | INT- | FD9 BLUE | | | |
| 88-081B | | KNOB(L),KNUCKLE | | | |
| B001-88-091 | 1 | | | | |
| 02 | INT- | FD8 BLACK | | | |
| 48 | INT- | FD9 BLUE | | | |
| 88-101 | | KNUCKLE(R),RECLINING | | | |
| FB01-88-101 | 1 | | | | |
| 88-102 | | ADJUSTER,NO.1 | | | |
| FC01-88-102A | 1 | | | | |
| 88-103 | | ADJUSTER,NO.2 | | | |
| FC50-88-103 | 1 | | | | |

(THIS ILLUSTRATION CONSISTS OF 4 PAGES)

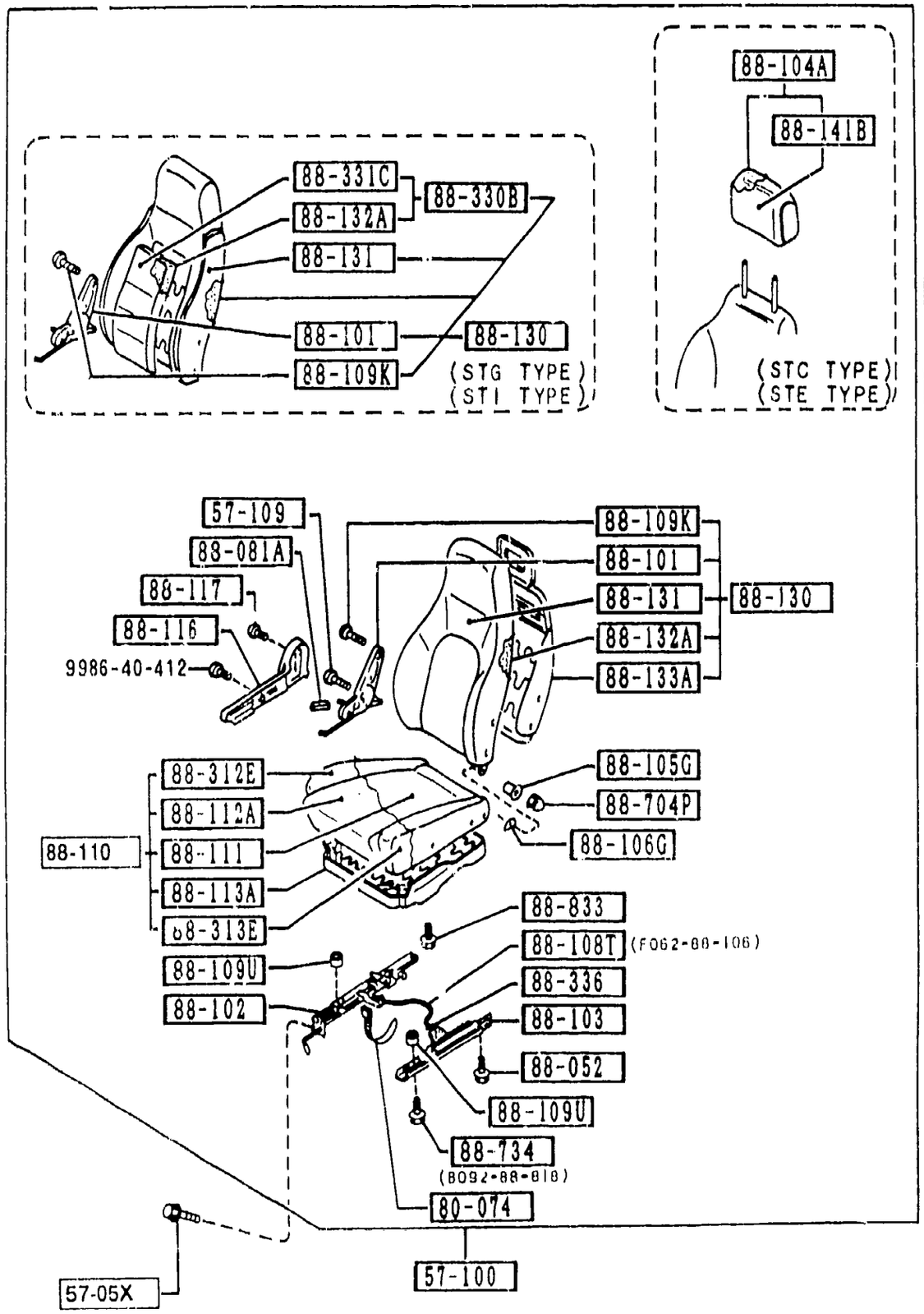


| PART NO. | QTY | MODEL/RESTRICTION | MODEL/RESTRICTION | MODEL/RESTRICTION | FROM-TO |
|---|---|---|---|---|---|
| 88-104A | | RESTRAINT,HEAD | | | |
| FC03-88-140 | 2 | BASE-OPT-1, (STC TYPE) | | | |
| 02 | INT- | FD8 BLACK | | | |
| 48 | INT- | FD9 BLUE | | | |
| FC70-88-140 | 2 | BASE-OPT-2, (STE TYPE) | | | |
| 02 | INT- | FD8 BLACK | | | |
| 48 | INT- | FD9 BLUE | | | |
| 88-105G | | BUSH,HINGE | | | |
| FB01-88-107 | 2 | | | | |
| 88-106G | | WASHER,HINGE | | | |
| FB01-88-105 | 2 | | | | |
| 88-108T | | WIRE,RELEASE | | | |
| F062-88-106 | 1 | (FOR RIGHT) | | | |
| H115-88-108 | 1 | (FOR LEFT) | | | |
| 88-109K | | SCREW,KNUCKLE | | | |
| B095-88-109 | 4 | | | | |
| 88-109U | | SPACER | | | |
| FB44-88-109 | 4 | TURBO, TURBO-OPT, (STG TYPE) (STI TYPE) | | | |
| 88-110 | | CUSHION(R),FRT SEAT | | | |
| FCX7-88-110B | 1 | TURBO, (STG TYPE) | | | |
| 02 | INT- | FD8 BLACK | | | |
| 48 | INT- | FD9 BLUE | | | |
| FCY4-88-110A | 1 | BASE-OPT-2, (STE TYPE) | | | |
| 02 | INT- | FD8 BLACK | | | |
| 48 | INT- | FD9 BLUE | | | |
| FCY5-88-110 | 1 | TURBO-OPT, (STI TYPE) | | | |
| 02 | INT- | FD8 BLACK | | | |
| 48 | INT- | FD9 BLUE | | | |

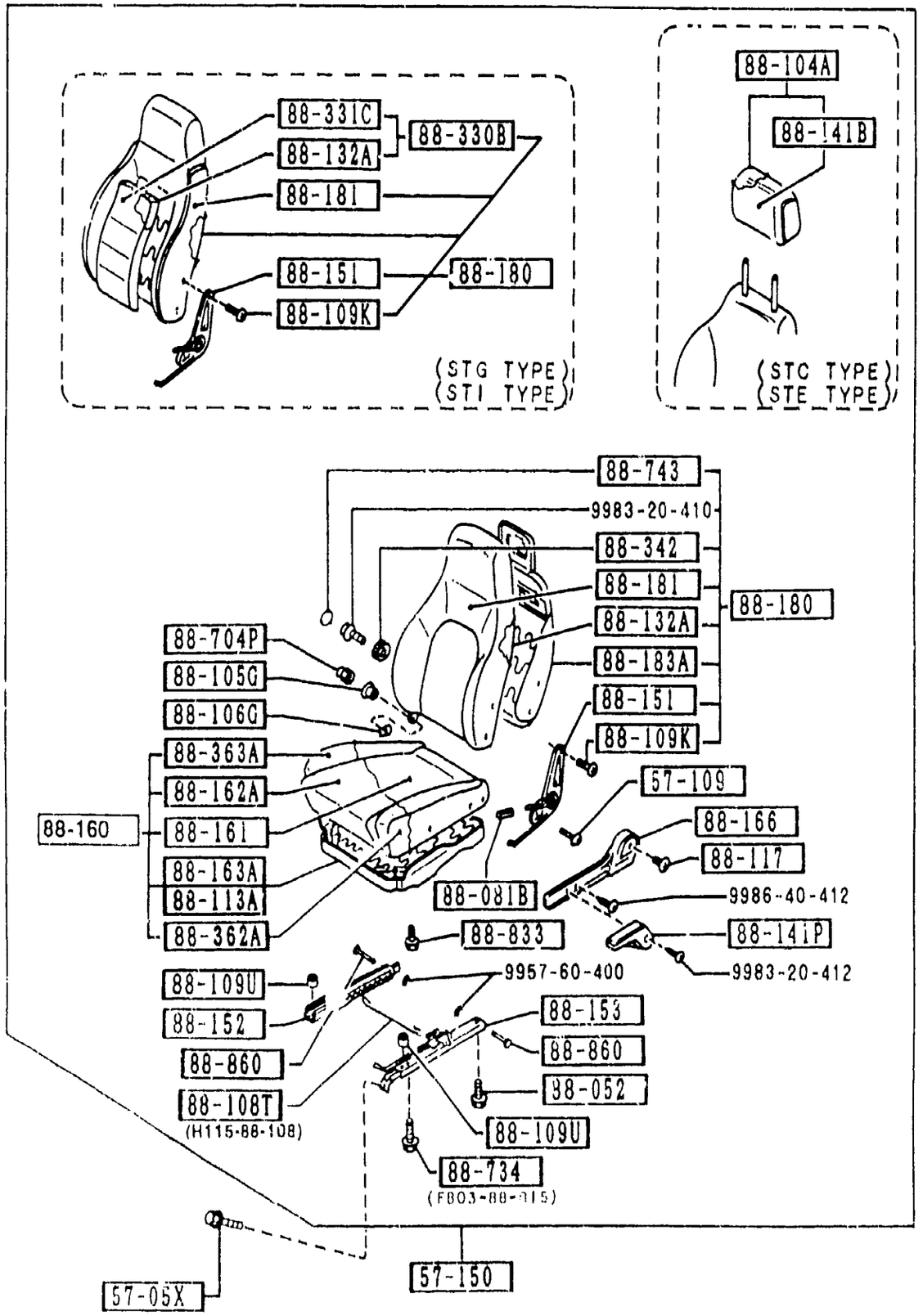


5700 -4 FRONT SEATS
(COUPE)

| PART NO. | QTY | MODEL/RESTRICTION | MODEL/RESTRICTION | MODEL/RESTRICTION | FROM-TO |
|---|---|---|---|---|---|
| CONT'D | | | | | |
| FC11-88-110A | 1 | BASE,<br>(STA TYPE) | | | |
| 02 | INT- | FD8 BLACK | | | |
| 48 | INT- | FD9 BLUE | | | |
| FC13-88-110A | 1 | BASE-OPT-1,<br>(STC TYPE) | | | |
| 02 | INT- | FD8 BLACK | | | |
| 48 | INT- | FD9 BLUE | | | |
| +88-111+ | | TRIM(R),SEAT CUSHION | | | |
| FC01-88-111A | 1 | BASE,<br>(STA TYPE) | | | |
| 02 | INT- | FD8 BLACK | | | |
| 48 | INT- | FD9 BLUE | | | |
| FC03-88-111A | 1 | BASE-OPT-1,<br>(STC TYPE) | | | |
| 02 | INT- | FD8 BLACK | | | |
| 48 | INT- | FD9 BLUE | | | |
| FC70-88-111A | 1 | BASE-OPT-2,<br>(STE TYPE) | | | |
| 02 | INT- | FD8 BLACK | | | |
| 48 | INT- | FD9 BLUE | | | |
| +88-112A+ | | PAD(R),CUSHION-FRT | | | |
| FC01-88-112 | 1 | BASE,<br>(STA TYPE) | | | |
| FC03-88-112 | 1 | BASE-OPT-1, BASE-OPT-2,<br>(STC TYPE)<br>(STE TYPE) | | | |
| +88-113A+ | | FRAME(R),CUSHION-FRT | | | |
| FC11-88-113A | 2 | BASE,<br>(STA TYPE) | | | |
| FC13-88-113A | 1 | BASE-OPT-1, BASE-OPT-2,<br>(STC TYPE)<br>(STE TYPE) | | | |
| +88-116+ | | COVER(R),KNUCKLE | | | |
| FC11-88-127A | 1 | | | | |
| 02 | INT- | FD8 FE1 BLACK | | | |
| 48 | INT- | FD9 BLUE | | | |

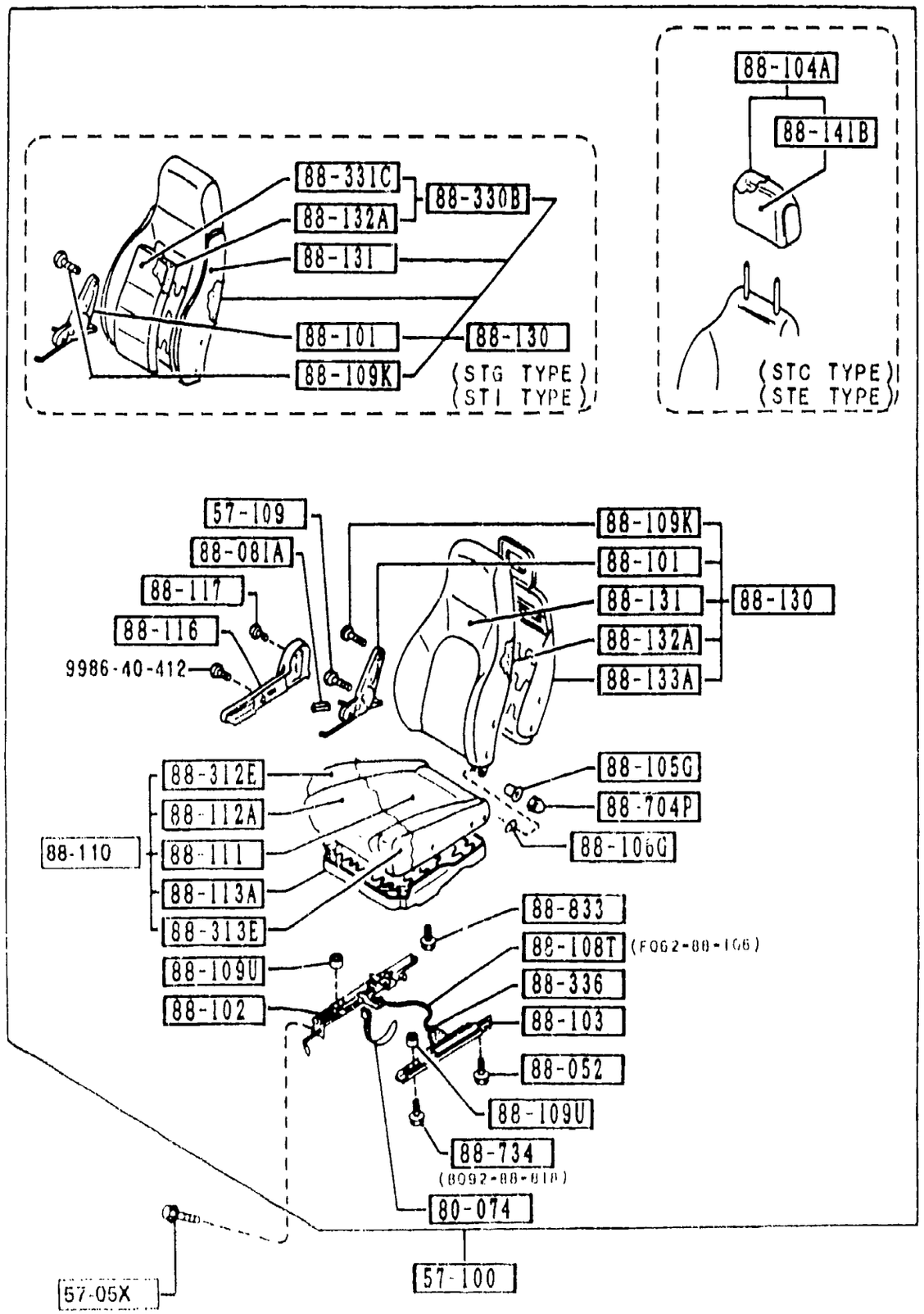




| PART NO. | QTY | MODEL/RESTRICTION | MODEL/RESTRICTION | MODEL/RESTRICTION | FROM-TO |
|---|---|---|---|---|---|
| 88-117 | | SCREW,KNUCKLE | | | |
| 1243-88-117 | 2 | | | | |
| 88-130 | | BACK(R),FRONT SEAT | | | |
| FB46-88-130 | 1 | TURBO-OPT, (STI TYPE) | | | |
| 02 | INT- | FD8 BLACK | | | |
| 48 | INT- | FD9 BLUE | | | |
| FC01-88-130 | 1 | BASE, (STA TYPE) | | | |
| 02 | INT- | FD8 BLACK | | | |
| 48 | INT- | FD9 BLUE | | | |
| FC03-88-130 | 1 | BASE-OPT-1, (STC TYPE) | | | |
| 02 | INT- | FD8 BLACK | | | |
| 48 | INT- | FD9 BLUE | | | |
| FC07-88-130 | 1 | TURBO, (STG TYPE) | | | |
| 02 | INT- | FD8 BLACK | | | |
| 48 | INT- | FD9 BLUE | | | |
| FC70-88-130 | 1 | BASE-OPT-2, (STE TYPE) | | | |
| 02 | INT- | FD8 BLACK | | | |
| 48 | INT- | FD9 BLUE | | | |
| 88-131 | | TRIM(R),SEAT BACK | | | |
| FB46-88-131 | 1 | TURBO-OPT, (STI TYPE) | | | |
| 02 | INT- | FD8 BLACK | | | |
| 48 | INT- | FD9 BLUE | | | |
| FC01-88-131 | 1 | BASE, (STA TYPE) | | | |
| 02 | INT- | FD8 BLACK | | | |
| 48 | INT- | FD9 BLUE | | | |
| FC03-88-131 | 1 | BASE-OPT-1, (STC TYPE) | | | |
| 02 | INT- | FD8 BLACK | | | |
| 48 | INT- | FD9 BLUE | | | |
| FC07-88-131 | 1 | TURBO, (STG TYPE) | | | |

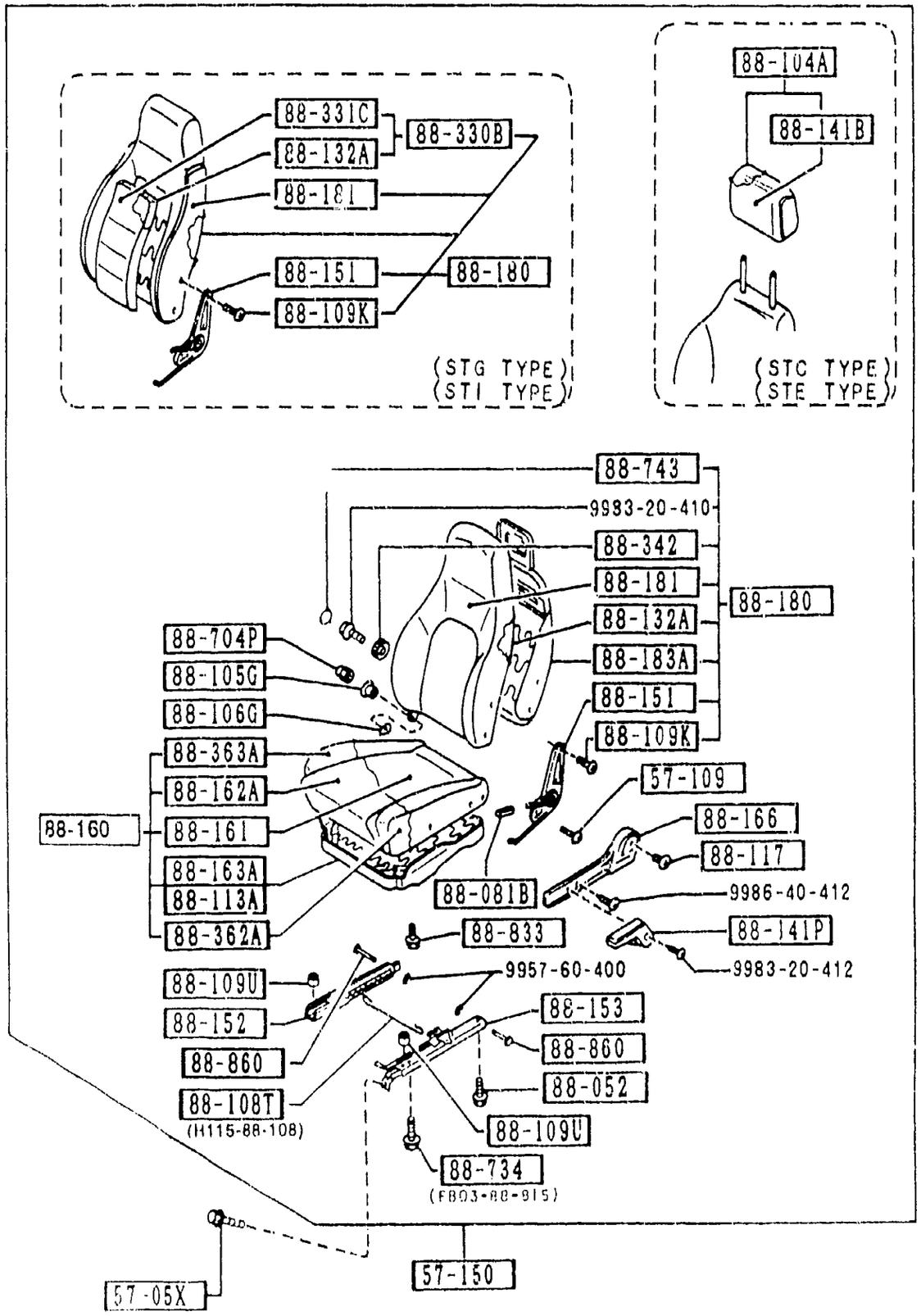




| PART NO. | QTY | MODEL/RESTRICTION | MODEL/RESTRICTION | MODEL/RESTRICTION | FROM-TO |
|---|---|---|---|---|---|
| CONT'D | | | | | |
| 02 | INT- | FD8 BLACK | | | |
| 48 | INT- | FD9 BLUE | | | |
| FC70-88-131 | 1 | BASE-OPT-2,<br>(STE TYPE) | | | |
| 02 | INT- | FD8 BLACK | | | |
| 48 | INT- | FD9 BLUE | | | |
| +----------+<br>\| 88-132A \|<br>+----------+ | | PAD(R),BACK-FRT | | | |
| FB44-88-132 | 2 | TURBO,<br>(STG TYPE) | | | |
| FC01-88-132 | 2 | BASE,<br>(STA TYPE) | | | |
| FC03-88-132 | 2 | BASE-OPT-1, BASE-OPT-2,<br>(STC TYPE)<br>(STE TYPE) | | | |
| +----------+<br>\| 88-133A \|<br>+----------+ | | FRAME(R),BACK-FRT | | | |
| FC01-88-133 | 1 | BASE,<br>(STA TYPE) | | | |
| FC03-88-133 | 1 | BASE-OPT-1, BASE-OPT-2,<br>(STC TYPE)<br>(STE TYPE) | | | |
| +----------+<br>\| 88-141B \|<br>+----------+ | | TRIM,HEAD REST-FRT | | | |
| FC03-88-141 | 2 | BASE-OPT-1,<br>(STC TYPE) | | | |
| 02 | INT- | FD8 BLACK | | | |
| 48 | INT- | FD9 BLUE | | | |
| FC70-88-141 | 2 | BASE-OPT-2,<br>(STE TYPE) | | | |
| 02 | INT- | FD8 BLACK | | | |
| 48 | INT- | FD9 BLUE | | | |
| +----------+<br>\| 88-141P \|<br>+----------+ | | LEVER,LIFTER | | | |
| FA58-88-831 | 1 | BASE-OPT-1, BASE-OPT-2,<br>(STC TYPE)<br>(STE TYPE) | | | |
| 02 | INT- | FD8 FE1 BLACK | | | |
| 48 | INT- | FD9 BLUE | | | |

(THIS ILLUSTRATION CONSISTS OF 4 PAGES)

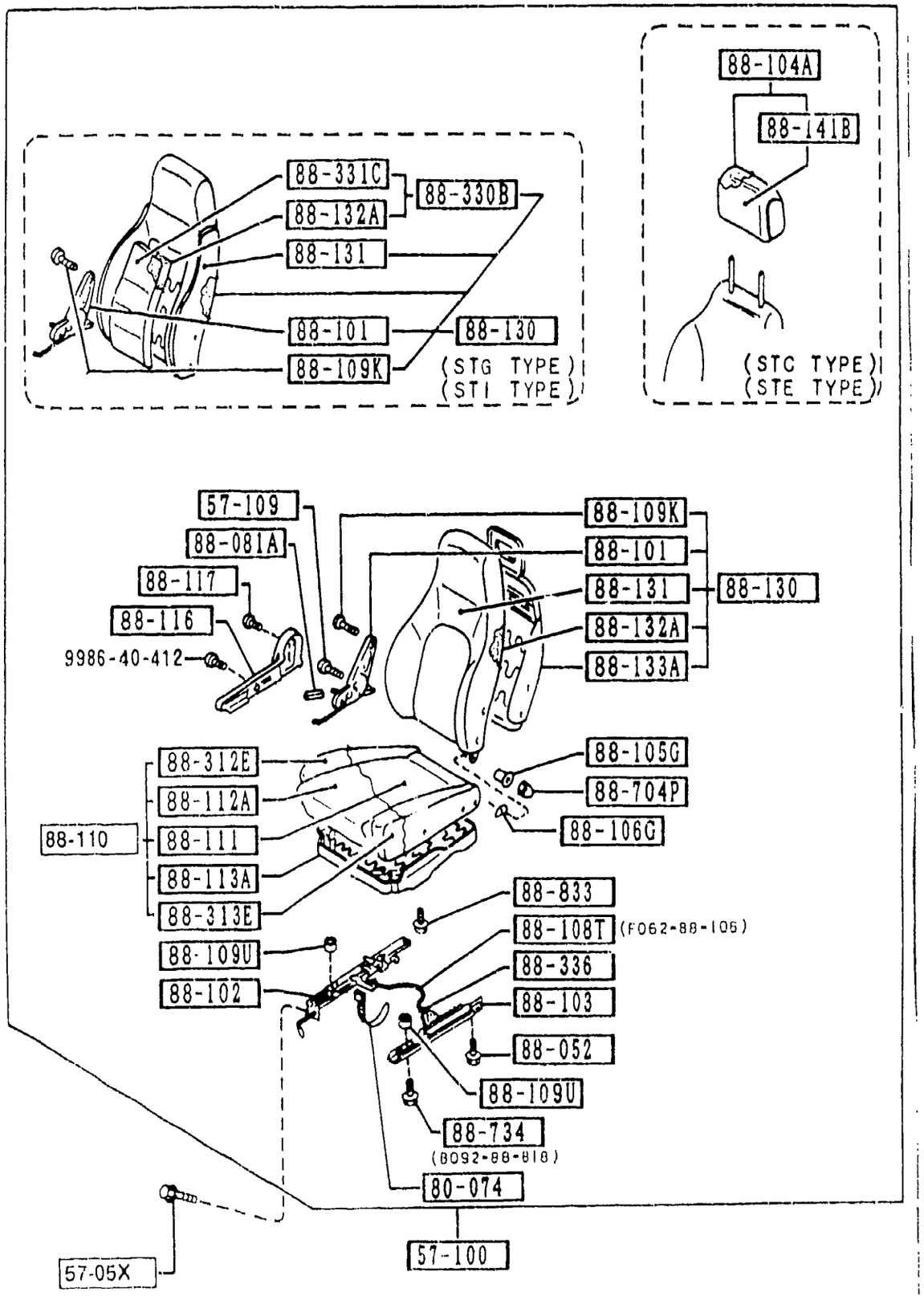






| PART NO. | QTY | MODEL/RESTRICTION | MODEL/RESTRICTION | MODEL/RESTRICTION | FROM-TO |
|---|---|---|---|---|---|
| 88-151 | | KNUCKLE(L),RECLINING | | | |
| FB01-88-151 | 1 | | | | |
| 88-152 | | ADJUSTER NO.3 | | | |
| FC01-88-152 | 1 | BASE, TURBO, TURBO-OPT,<br>(STA TYPE)<br>(STG TYPE)<br>(STI TYPE) | | | |
| FC03-88-152 | 1 | BASE-OPT-1, BASE-OPT-2,<br>(STC TYPE)<br>(STE TYPE) | | | |
| 88-153 | | ADJUSTER NO.4 | | | |
| FC01-88-153 | 1 | BASE, TURBO, TURBO-OPT,<br>(STA TYPE)<br>(STG TYPE)<br>(STI TYPE) | | | |
| FC03-88-153 | 1 | BASE-OPT-1, BASE-OPT-2,<br>(STC TYPE)<br>(STE TYPE) | | | |
| 88-160 | | CUSHION(L),FRT SEAT | | | |
| FCX7-88-160A | 1 | TURBO,<br>(STG TYPE) | | | |
| 02 | INT- | FD8 BLACK | | | |
| 48 | INT- | FD9 BLUE | | | |
| FCY5-88-160 | 1 | TURBO-OPT,<br>(STI TYPE) | | | |
| 02 | INT- | FD8 BLACK | | | |
| 48 | INT- | FD9 BLUE | | | |
| FC11-88-160A | 1 | BASE,<br>(STA TYPE) | | | |
| 02 | INT- | FD8 BLACK | | | |
| 48 | INT- | FD9 BLUE | | | |
| FC13-88-160A | 1 | BASE-OPT-1,<br>(STC TYPE) | | | |
| 02 | INT- | FD8 BLACK | | | |
| 48 | INT- | FD9 BLUE | | | |
| FC70-88-160 | 1 | BASE-OPT-2,<br>(STE TYPE) | | | |
| 02 | INT- | FD8 BLACK | | | |

(THIS ILLUSTRATION CONSISTS OF 4 PAGES)

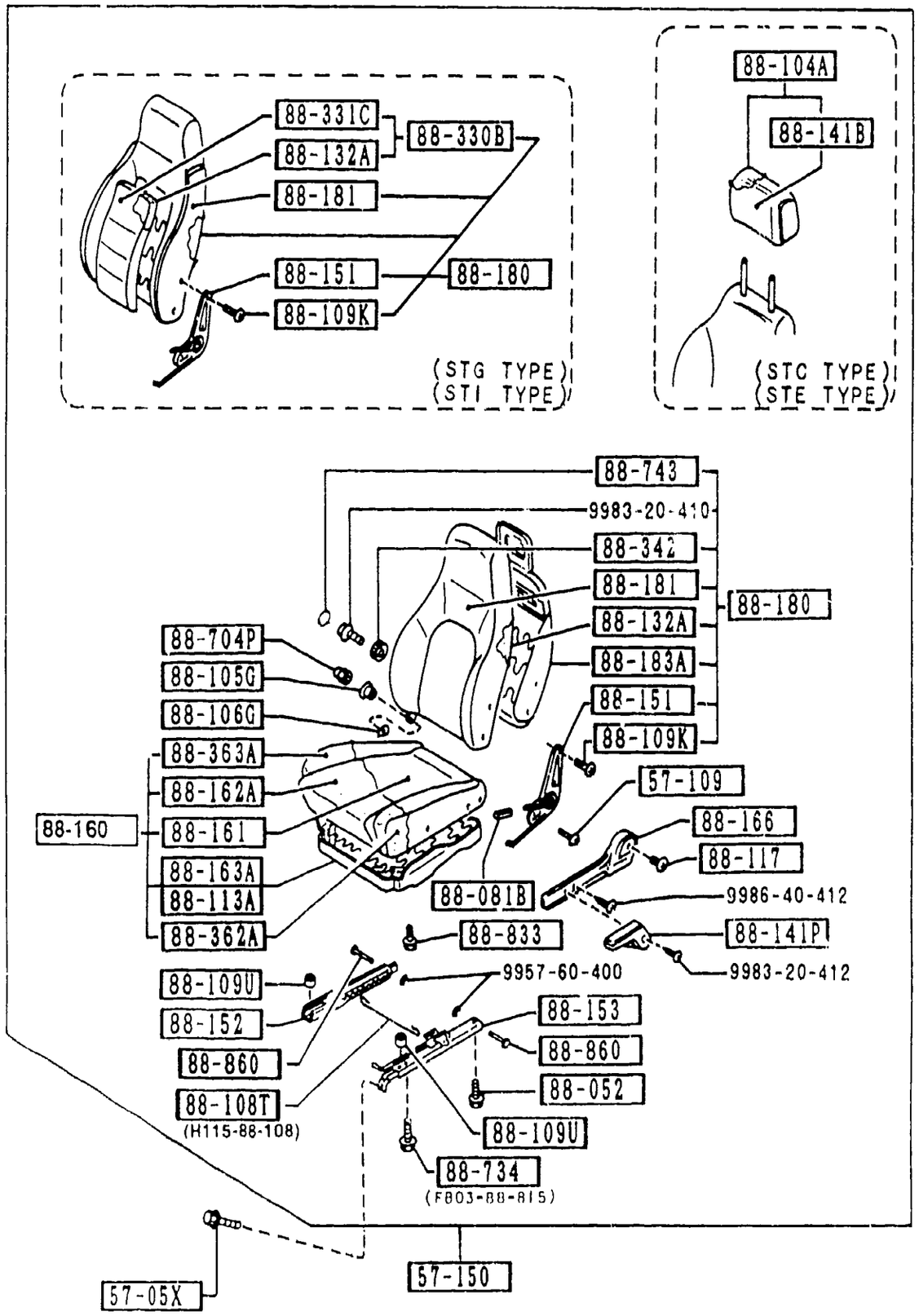


5700 -8 FRONT SEATS
(COUPE)

| PART NO. | QTY | MODEL/RESTRICTION | MODEL/RESTRICTION | MODEL/RESTRICTION | FROM-TO |
|---|---|---|---|---|---|
| CONT'D | | | | | |
| 48 | INT- | FD9 BLUE | | | |
| +---------+ | | | | | |
| \| 88-161 \| | | TRIM(L),SEAT CUSHION | | | |
| +---------+ | | | | | |
| FC01-88-161A | 1 | BASE,<br>(STA TYPE) | | | |
| 02 | INT- | FD8 BLACK | | | |
| 48 | INT- | FD9 BLUE | | | |
| FC03-88-161A | 1 | BASE-OPT-1,<br>(STC TYPE) | | | |
| 02 | INT- | FD8 BLACK | | | |
| 48 | INT- | FD9 BLUE | | | |
| FC70-88-161A | 1 | BASE-OPT-2,<br>(STE TYPE) | | | |
| 02 | INT- | FD8 BLACK | | | |
| 48 | INT- | FD9 BLUE | | | |
| +---------+ | | | | | |
| \| 88-162A \| | | PAD(L),CUSHION-FRT | | | |
| +---------+ | | | | | |
| FC01-88-162 | 1 | BASE,<br>(STA TYPE) | | | |
| FC03-88-162 | 1 | BASE-OPT-1, BASE-OPT-2,<br>(STC TYPE)<br>(STE TYPE) | | | |
| +---------+ | | | | | |
| \| 88-163A \| | | FRAME(L),CUSHION-FRT | | | |
| +---------+ | | | | | |
| FC13-88-163A | 1 | BASE-OPT-1, BASE-OPT-2,<br>(STC TYPE)<br>(STE TYPE) | | | |
| +---------+ | | | | | |
| \| 88-166 \| | | COVER(L),KNUCKLE | | | |
| +---------+ | | | | | |
| FC11-88-177A | 1 | BASE, TURBO, TURBO-OPT,<br>(STA TYPE)<br>(STG TYPE)<br>(STI TYPE) | | | |
| 02 | INT- | FD8 FE1 BLACK | | | |
| 48 | INT- | FD9 BLUE | | | |
| FC13-88-177 | 1 | BASE-OPT-1, BASE-OPT-2,<br>(STC TYPE)<br>(STE TYPE) | | | |
| 02 | INT- | FD8 FE1 BLACK | | | |
| 48 | INT- | FD9 BLUE | | | |

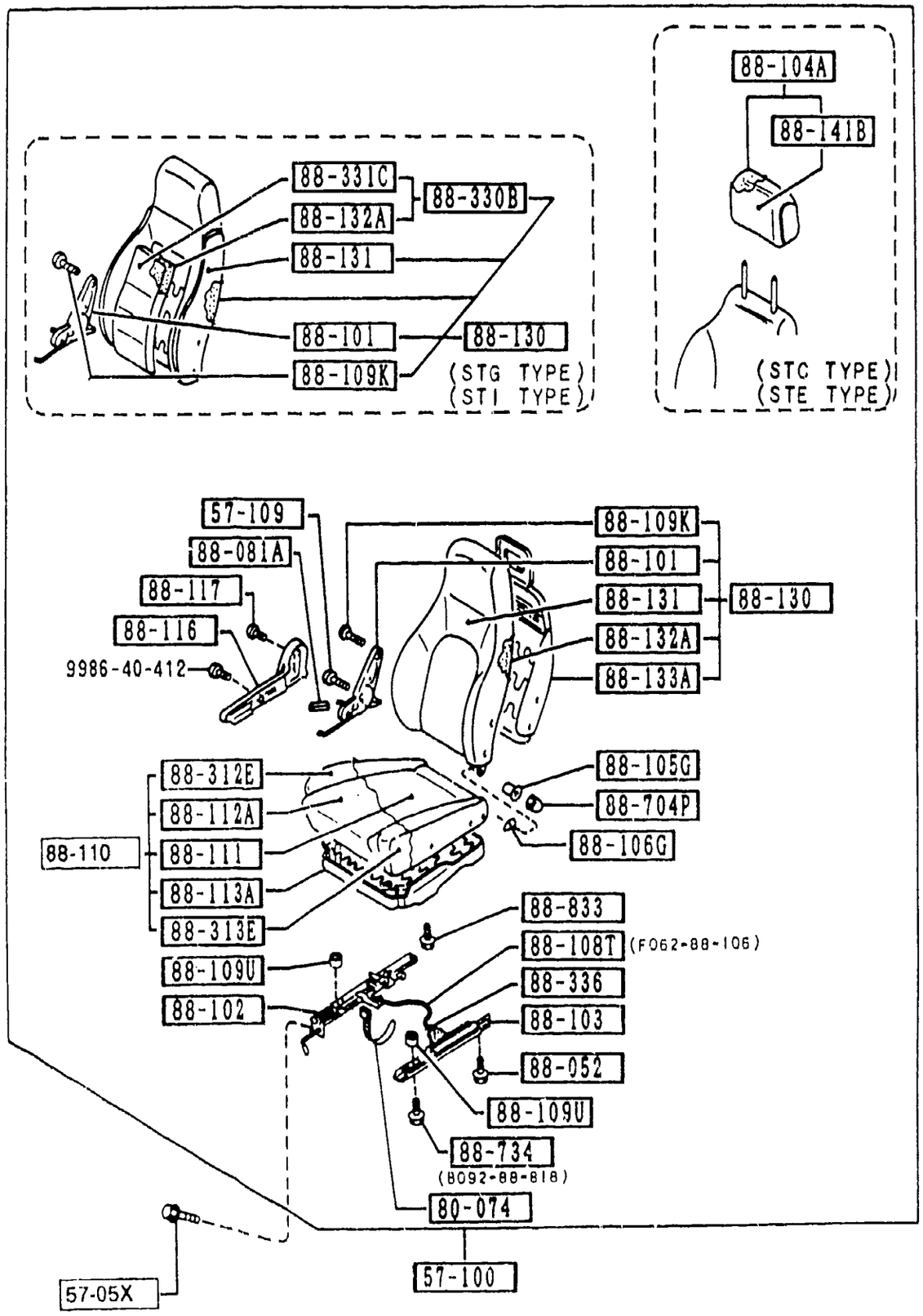




| PART NO. | QTY | MODEL/RESTRICTION | MODEL/RESTRICTION | MODEL/RESTRICTION | FROM-TO |
|---|---|---|---|---|---|
| 88-180 | | BACK(L),FRONT SEAT | | | |
| FB46-88-180 | 1 | TURBO-OPT,<br>(STI TYPE) | | | |
| 02 | INT- | FD8 BLACK | | | |
| 48 | INT- | FD9 BLUE | | | |
| FC01-88-180 | 1 | BASE,<br>(STA TYPE) | | | |
| 02 | INT- | FD8 BLACK | | | |
| 48 | INT- | FD9 BLUE | | | |
| FC03-88-180 | 1 | BASE-OPT-1,<br>(STC TYPE) | | | |
| 02 | INT- | FD8 BLACK | | | |
| 48 | INT- | FD9 BLUE | | | |
| FC07-88-180 | 1 | TURBO,<br>(STG TYPE) | | | |
| 02 | INT- | FD8 BLACK | | | |
| 48 | INT- | FD9 BLUE | | | |
| FC70-88-180 | 1 | BASE-OPT-2,<br>(STE TYPE) | | | |
| 02 | INT- | FD8 BLACK | | | |
| 48 | INT- | FD9 BLUE | | | |
| 88-181 | | TRIM(L),SEAT BACK | | | |
| FB46-88-181 | 1 | TURBO-OPT,<br>(STI TYPE) | | | |
| 02 | INT- | FD8 BLACK | | | |
| 48 | INT- | FD9 BLUE | | | |
| FC01-88-181 | 1 | BASE,<br>(STA TYPE) | | | |
| 02 | INT- | FD8 BLACK | | | |
| 48 | INT- | FD9 BLUE | | | |
| FC03-88-181 | 1 | BASE-OPT-1,<br>(STC TYPE) | | | |
| 02 | INT- | FD8 BLACK | | | |
| 19 | INT- | FE0 RED | | | |
| 48 | INT- | FD9 BLUE | | | |
| FC07-88-181 | 1 | TURBO,<br>(STG TYPE) | | | |
| 02 | INT- | FD8 BLACK | | | |

(THIS ILLUSTRATION CONSISTS OF 4 PAGES)

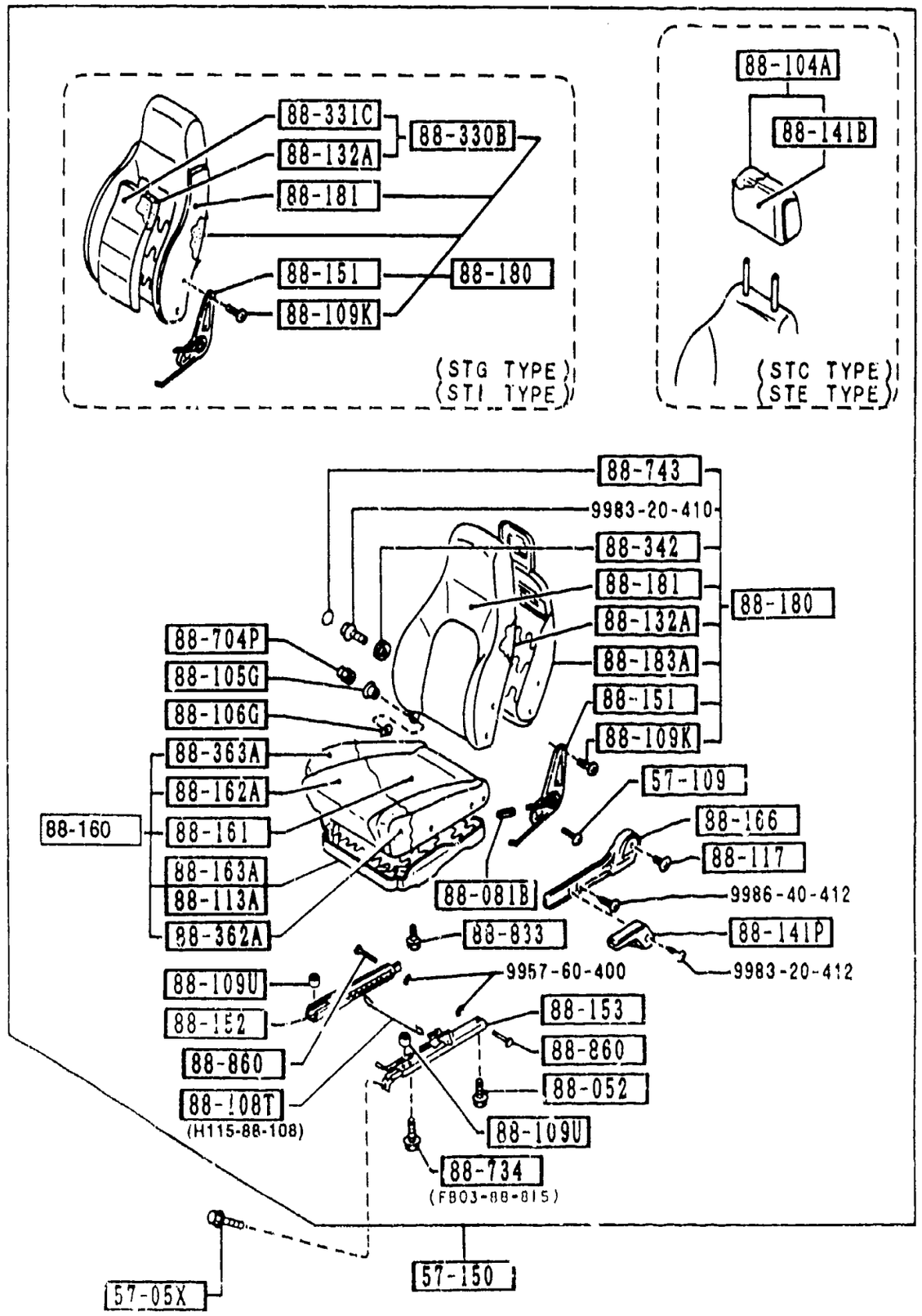


5700 -10 FRONT SEATS
(COUPE)

| PART NO. | QTY | MODEL/RESTRICTION | MODEL/RESTRICTION | MODEL/RESTRICTION | FROM-TO |
|---|---|---|---|---|---|
| CONT'D | | | | | |
| 48 | INT- | FD9 BLUE | | | |
| FC70-88-181 | 1 | BASE-OPT-2, (STE TYPE) | | | |
| 02 | INT- | FD8 BLACK | | | |
| 48 | INT- | FD9 BLUE | | | |
| +88-183A+ | | FRAME(L),BACK-FRT | | | |
| FC01-88-183 | 1 | BASE, (STA TYPE) | | | |
| FC03-88-183 | 1 | BASE-OPT-1, BASE-OPT-2, (STC TYPE) (STE TYPE) | | | |
| +88-312E+ | | PAD,SIDE-FRT CUSHION | | | |
| FC01-88-312 | 1 | BASE, (STA TYPE) | | | |
| +88-313E+ | | PAD,SIDE-FRT CUSHION | | | |
| FC01-88-313A | 1 | BASE, (STA TYPE) | | | |
| +88-330R+ | | BACK(C),FRT SEAT | | | |
| FB46-88-330 | 2 | TURBO-OPT, (STI TYPE) | | | |
| 02 | INT- | FD8 BLACK | | | |
| 48 | INT- | FD9 BLUE | | | |
| FC07-88-330 | 2 | TURBO, (STG TYPE) | | | |
| 02 | INT- | FD8 BLACK | | | |
| 48 | INT- | FD9 BLUE | | | |
| +88-331C+ | | TRIM(C),FRT BACK | | | |
| FB46-88-331 | 2 | TURBO-OPT, (STI TYPE) | | | |
| 02 | INT- | FD8 BLACK | | | |
| 48 | INT- | FD9 BLUE | | | |
| FC07-88-331 | 2 | TURBO, (STG TYPE) | | | |
| 02 | INT- | FD8 BLACK | | | |
| 48 | INT- | FD9 BLUE | | | |

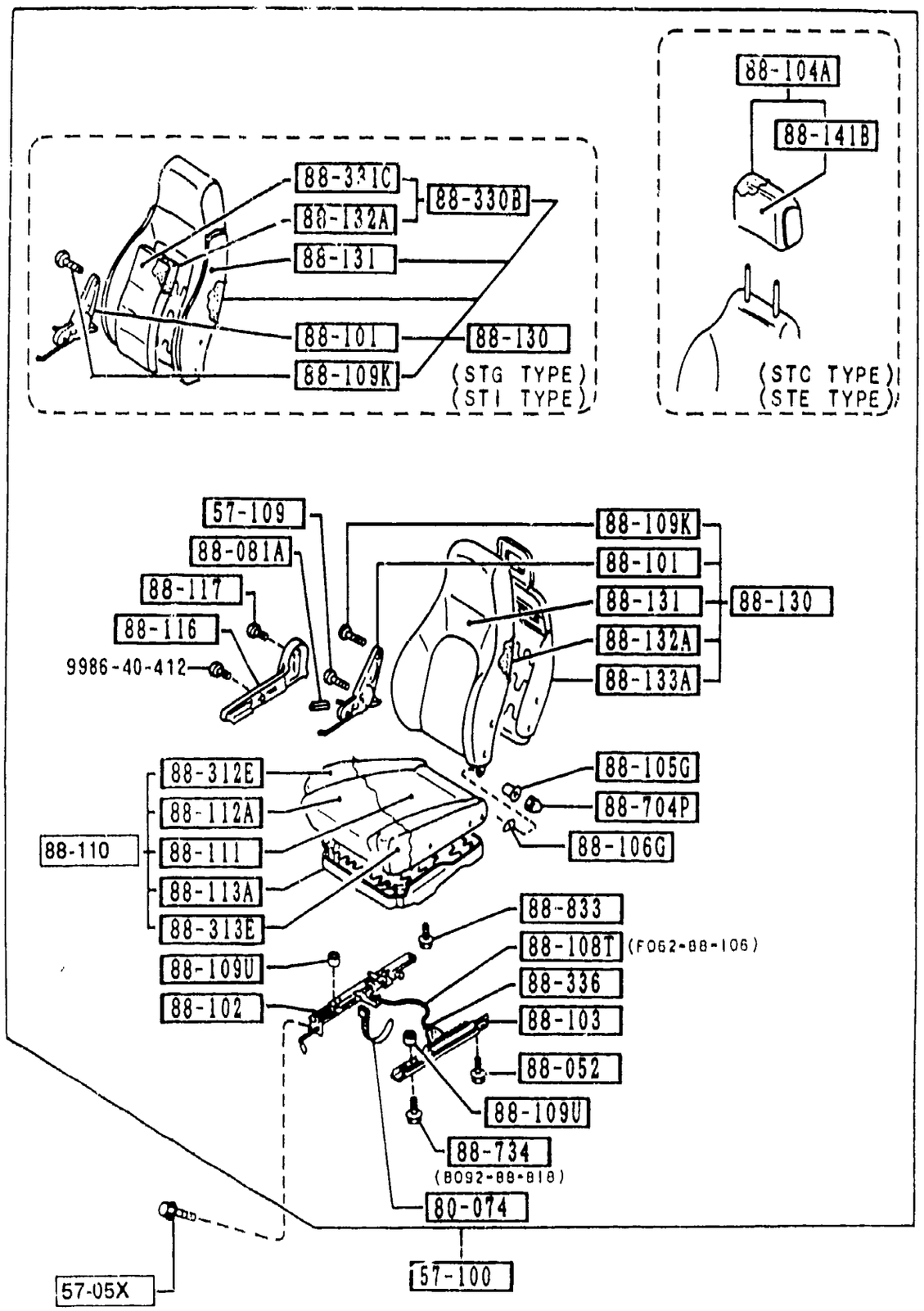




| PART NO. | QTY | MODEL/RESTRICTION | MODEL/RESTRICTION | MODEL/RESTRICTION | FROM-TO |
|---|---|---|---|---|---|
| 88-336 | | RING,STOPPER | | | |
| FA58-88-336 | 1 | | | | |
| 88-342 | | DIAL,LUMBAR SUPPORT | | | |
| FB03-88-385 | 1 | BASE-OPT-1, BASE-OPT-2,<br>(STC TYPE)<br>(STE TYPE) | | | |
| 02 | INT- | FD8 BLACK | | | |
| 48 | INT- | FD9 BLUE | | | |
| 88-362A | | PAD,SIDE-FRT CUSHION | | | |
| FC01-88-362 | 1 | BASE,<br>(STA TYPE) | | | |
| FC03-88-362A | 1 | BASE-OPT-1, BASE-OPT-2,<br>(STC TYPE)<br>(STE TYPE) | | | |
| 88-363A | | PAD,SIDE-FRT CUSHION | | | |
| FC01-88-363A | 1 | BASE,<br>(STA TYPE) | | | |
| FC03-88-363A | 1 | BASE-OPT-1, BASE-OPT-2,<br>(STC TYPE)<br>(STE TYPE) | | | |
| 88-704P | | NUT | | | |
| B092-88-519 | 2 | | | | |
| 88-734 | | BOLT | | | |
| FB03-88-815 | 2 | BASE-OPT-1, BASE-OPT-2,<br>(STC TYPE)<br>(STE TYPE) | | | |
| B092-88-818 | 2 | BASE-OPT-1, BASE-OPT-2,<br>(STC TYPE)<br>(STE TYPE) | | | |
| B092-88-818 | 4 | BASE,<br>(STA TYPE) | | | |
| 88-743 | | COVER,DIAL | | | |
| FB03-88-386 | 1 | BASE-OPT-1, BASE-OPT-2,<br>(STC TYPE)<br>(STE TYPE) | | | |
| 02 | INT- | FD8 BLACK | | | |

(THIS ILLUSTRATION CONSISTS OF 4 PAGES)

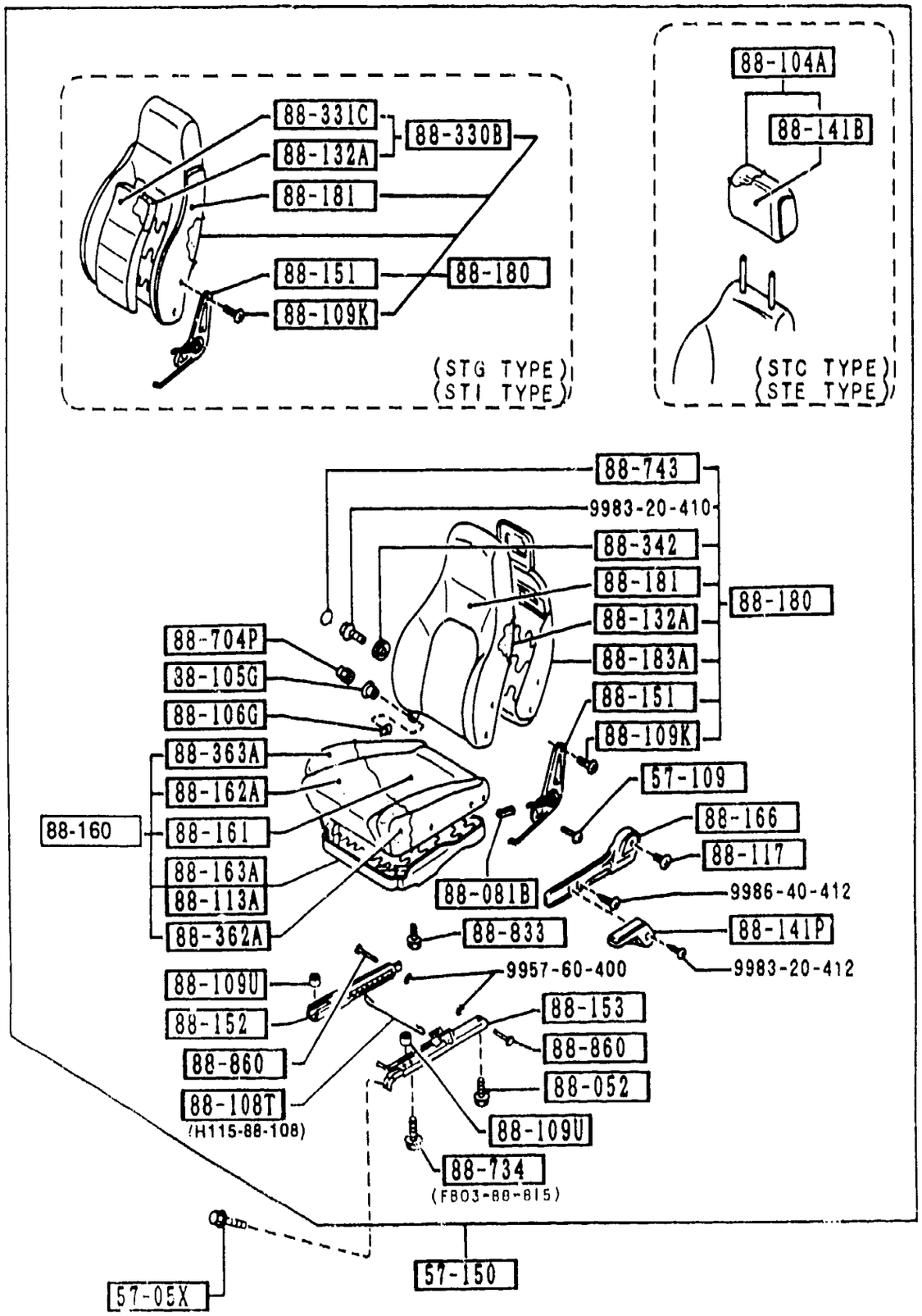


5700 -12* FRONT SEATS
(COUPE)

| PART NO. | QTY | MODEL/RESTRICTION | MODEL/RESTRICTION | MODEL/RESTRICTION | FROM-TO |
|---|---|---|---|---|---|
| CONT'D | | | | | |
| 48 INT- | | FD9 BLUE | | | |
| 88-833 | | BOLT,ADJUSTER-FRT SEAT | | | |
| F044-88-833 | 4 | TURBO, TURBO-OPT, (STG TYPE) (STI TYPE) | | | |
| 88-860 | | PIN,JOINT | | | |
| BA49-88-860 | 2 | BASE-OPT-1, BASE-OPT-2, (STC TYPE) (STE TYPE) | | | |

(THIS ILLUSTRATION CONSISTS OF 2 PAGES)

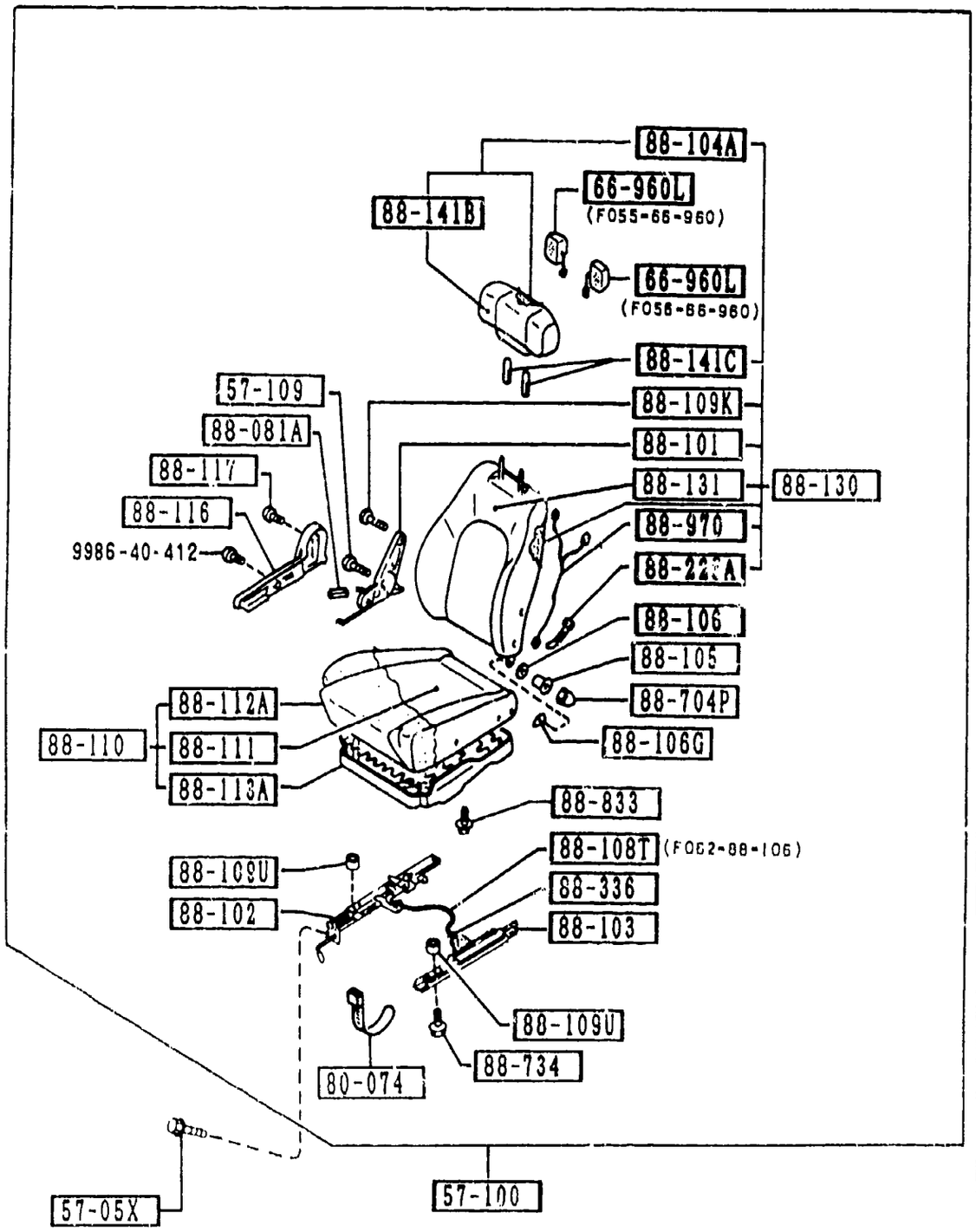






(THIS ILLUSTRATION CONSISTS OF 2 PAGES)

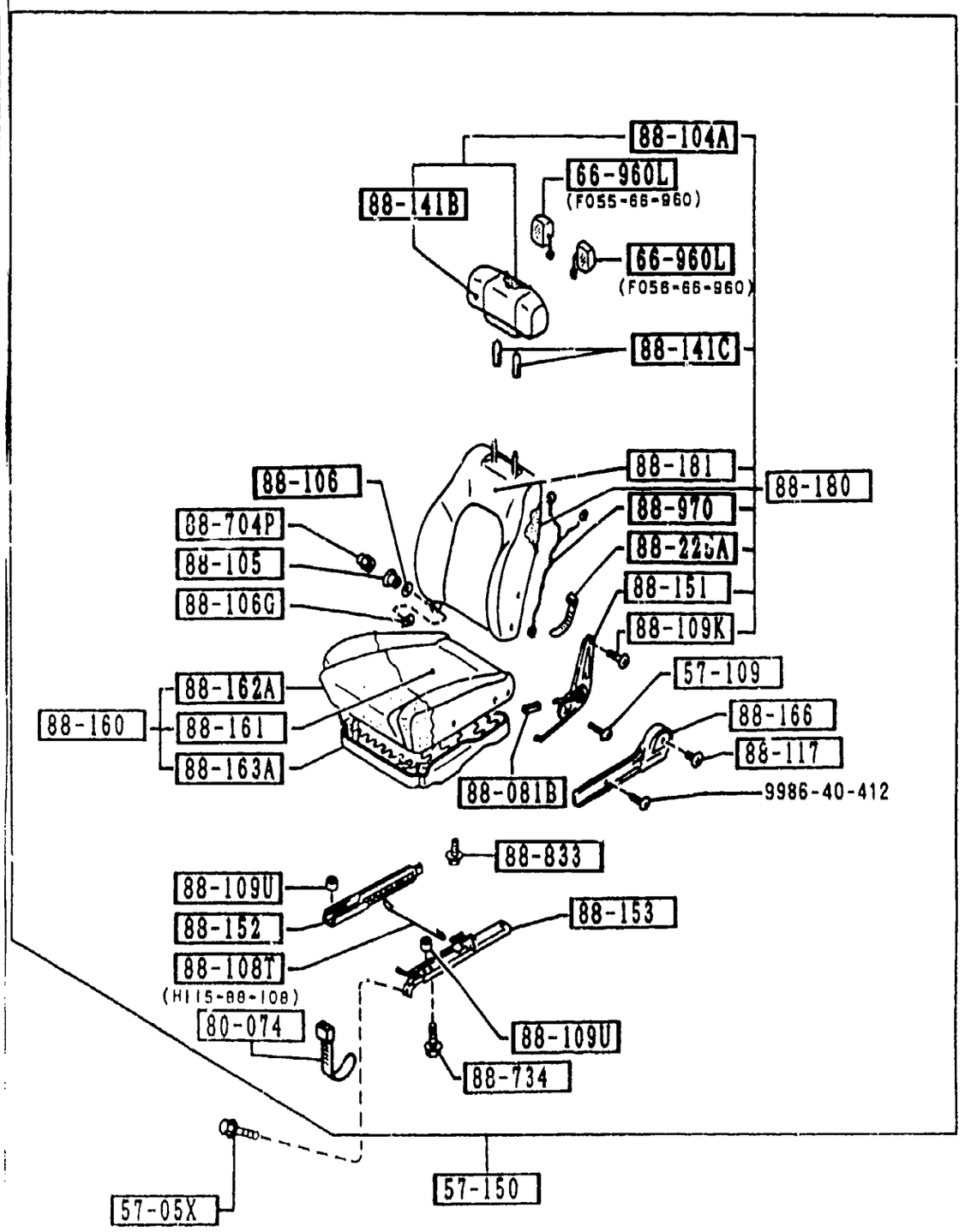

(THIS ILLUSTRATION CONSISTS OF 2 PAGES)

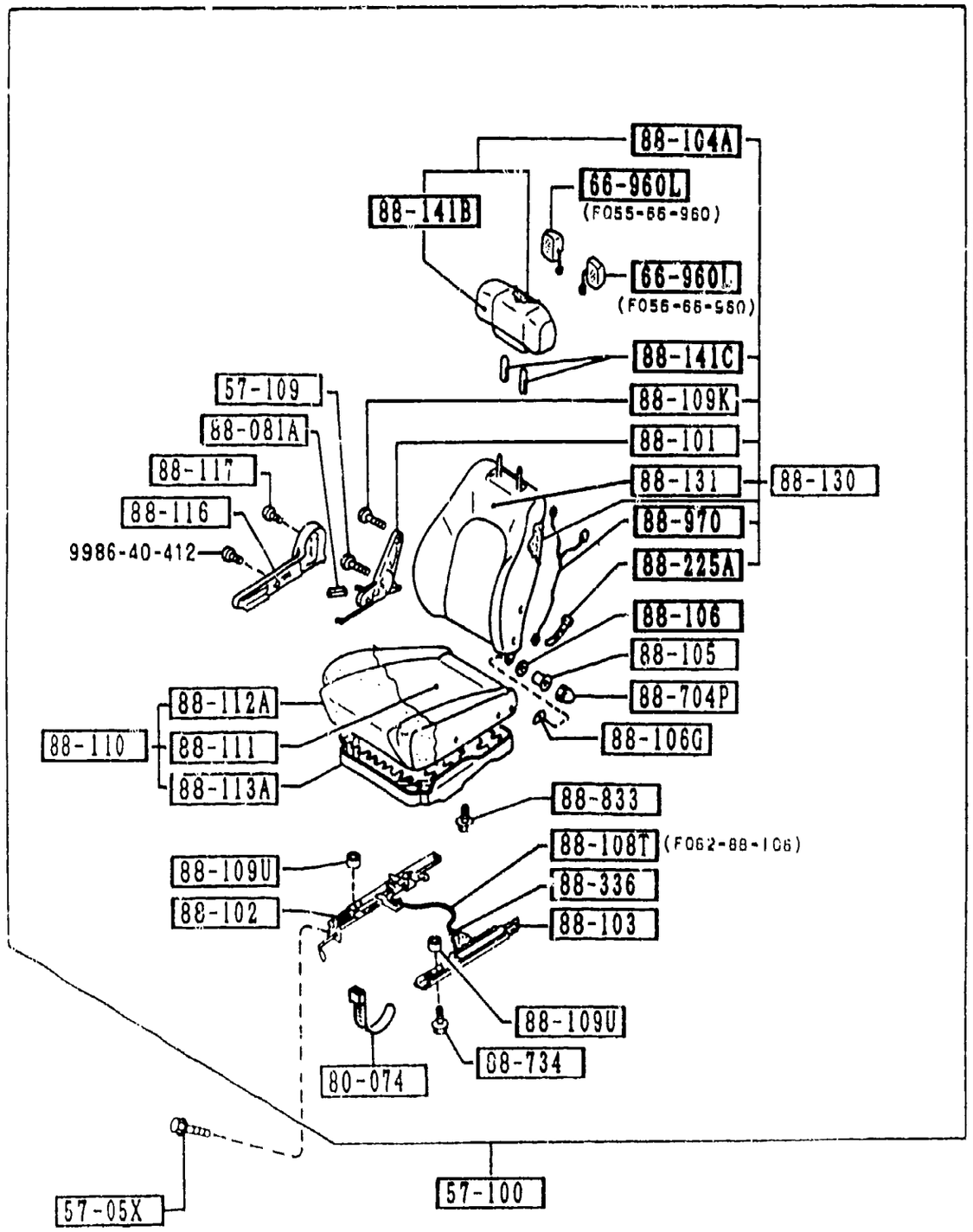






| PART NO. | QTY | MODEL/RESTRICTION | MODEL/RESTRICTION | MODEL/RESTRICTION | FROM-TO |
|---|---|---|---|---|---|
| 57-05X | | BOLT,LINK | | | |
| B455-57-05X | 8 | | | | |
| 57-100 | | SEAT(R),FRONT | | | |
| FCY3-57-100 | 1 | | | | -2401 |
| 02 | INT- | FD8 BLACK | | | |
| 48 | INT- | FD9 BLUE | | | |
| FC34-57-100C | 1 | | | | 2401- |
| 02 | INT- | FD8 BLACK | | | |
| 48 | INT- | FD9 BLUE | | | |
| 57-109 | | SCREW,KNUCKLE | | | |
| 0259-57-109 | 4 | | | | |
| 57-150 | | SEAT(L),FRONT | | | |
| FCY3-57-150 | 1 | | | | -2401 |
| 02 | INT- | FD8 BLACK | | | |
| 48 | INT- | FD9 BLUE | | | |
| FC34-57-150B | 1 | | | | 2401- |
| 02 | INT- | FD8 BLACK | | | |
| 48 | INT- | FD9 BLUE | | | |
| 66-960L | | SPEAKER(L),W/BOX & AMP | | | |
| F055-66-960 | 2 | | | | |
| F056-66-960 | 2 | | | | |
| 80-074 | | BAND | | | |
| 3966-88-116 | 5 | | | | |
| 88-081A | | KNOB(R),KNUCKLE | | | |
| B001-88-081 | 1 | | | | |
| 02 | INT- | FD8 BLACK | | | |
| 48 | INT- | FD9 BLUE | | | |
| 88-081B | | KNOB(L),KNUCKLE | | | |
| B001-88-091 | 1 | | | | |
| 02 | INT- | FD8 BLACK | | | |
| 48 | INT- | FD9 BLUE | | | |

(THIS ILLUSTRATION CONSISTS OF 2 PAGES)

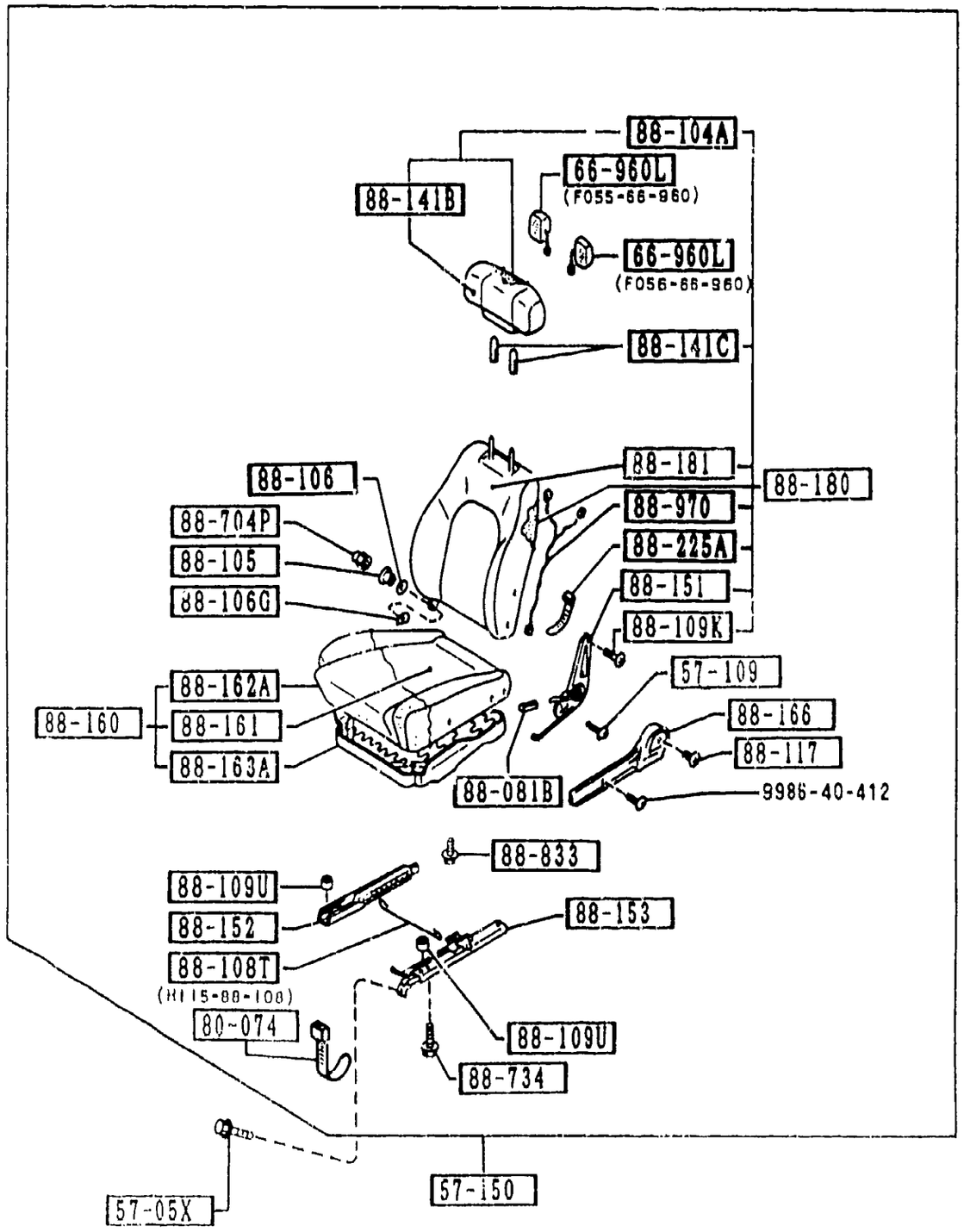




| PART NO. | QTY | MODEL/RESTRICTION | MODEL/RESTRICTION | MODEL/RESTRICTION | FROM-TO |
|---|---|---|---|---|---|
| 88-101 | | KNUCKLE(R),RECLINING | | | |
| FB01-88-101 | 1 | | | | |
| 88-102 | | ADJUSTER,NO.1 | | | |
| FC34-88-102A | 1 | | | | |
| 88-103 | | ADJUSTER,NO.2 | | | |
| FC34-88-103 | 1 | | | | |
| 88-104A | | RESTRAINT,HEAD | | | |
| FB69-88-140 | 2 | | | | |
| 02 | INT- | FD8 BLACK | | | |
| 48 | INT- | FD9 BLUE | | | |
| 88-105 | | BUSH | | | |
| FB67-88-105 | 2 | | | | |
| 88-106 | | WASHER | | | |
| FB67-88-107 | 2 | | | | |
| 88-106G | | WASHER,HINGE | | | |
| FB01-88-105 | 2 | | | | |
| 88-108T | | WIRE,RELEASE | | | |
| F062-88-106 | 1 | | | | |
| H115-88-108 | 1 | | | | |
| 88-109K | | SCREW,KNUCKLE | | | |
| B095-88-109 | 4 | | | | |
| 88-109U | | SPACER | | | |
| FB44-88-109 | 4 | | | | |
| 88-110 | | CUSHION(R),FRT SEAT | | | |
| FB69-88-110 | 1 | | | | |
| 02 | INT- | FD8 BLACK | | | |
| 48 | INT- | FD9 BLUE | | | |
| 88-111 | | TRIM(R),SEAT CUSHION | | | |
| FB69-88-111 | 1 | | | | |

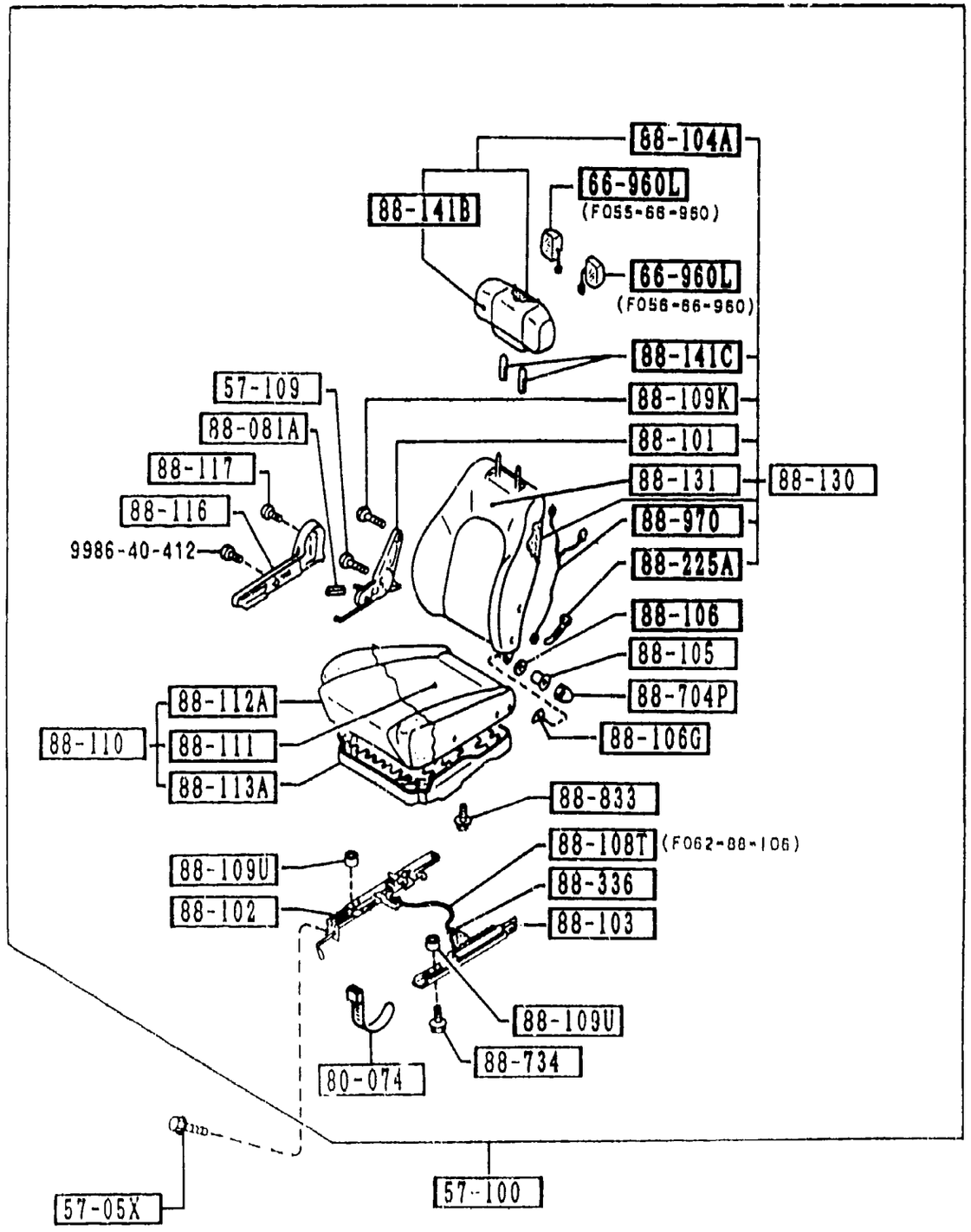






| PART NO. | QTY | MODEL/RESTRICTION | MODEL/RESTRICTION | MODEL/RESTRICTION | FROM-TO |
|---|---|---|---|---|---|
| CONT'D | | | | | |
| 02 | INT- | FD8 BLACK | | | |
| 48 | INT- | FD9 BLUE | | | |
| +----------+ | | | | | |
| \| 88-112A \| | | PAD(R),CUSHION-FRT | | | |
| +----------+ | | | | | |
| FR44-88-112 | 1 | | | | |
| +----------+ | | | | | |
| \| 88-113A \| | | FRAME(R),CUSHION-FRT | | | |
| +----------+ | | | | | |
| FB68-88-113 | 1 | | | | |
| +----------+ | | | | | |
| \| 88-116 \| | | COVER(R),KNUCKLE | | | |
| +----------+ | | | | | |
| F044-88-127A | 1 | | | | |
| 02 | INT- | FD8 BLACK | | | |
| 48 | INT- | FD9 BLUE | | | |
| +----------+ | | | | | |
| \| 88-117 \| | | SCREW,KNUCKLE | | | |
| +----------+ | | | | | |
| 1243-88-117 | 2 | | | | |
| +----------+ | | | | | |
| \| 88-130 \| | | BACK(R),FRONT SEAT | | | |
| +----------+ | | | | | |
| FC72-88-130 | 1 | | | | |
| 02 | INT- | FD8 BLACK | | | |
| 48 | INT- | FD9 BLUE | | | |
| +----------+ | | | | | |
| \| 88-131 \| | | TRIM(R),SEAT BACK | | | |
| +----------+ | | | | | |
| FC72-88-131 | 1 | | | | |
| 02 | INT- | FD8 BLACK | | | |
| 48 | INT- | FD9 BLUE | | | |
| +----------+ | | | | | |
| \| 88-141B \| | | TRIM,HEAD REST-FRT | | | |
| +----------+ | | | | | |
| FB69-88-141 | 2 | | | | |
| 02 | INT- | FD8 BLACK | | | |
| 48 | INT- | FD9 BLUE | | | |
| +----------+ | | | | | |
| \| 88-141C \| | | GUIDE,POLE-NO.1 | | | |
| +----------+ | | | | | |
| FB68-88-335 | 4 | | | | |
| +----------+ | | | | | |
| \| 88-151 \| | | KNUCKLE(L),RECLINING | | | |
| +----------+ | | | | | |
| FB01-88-151 | 1 | | | | |

(THIS ILLUSTRATION CONSISTS OF 2 PAGES)

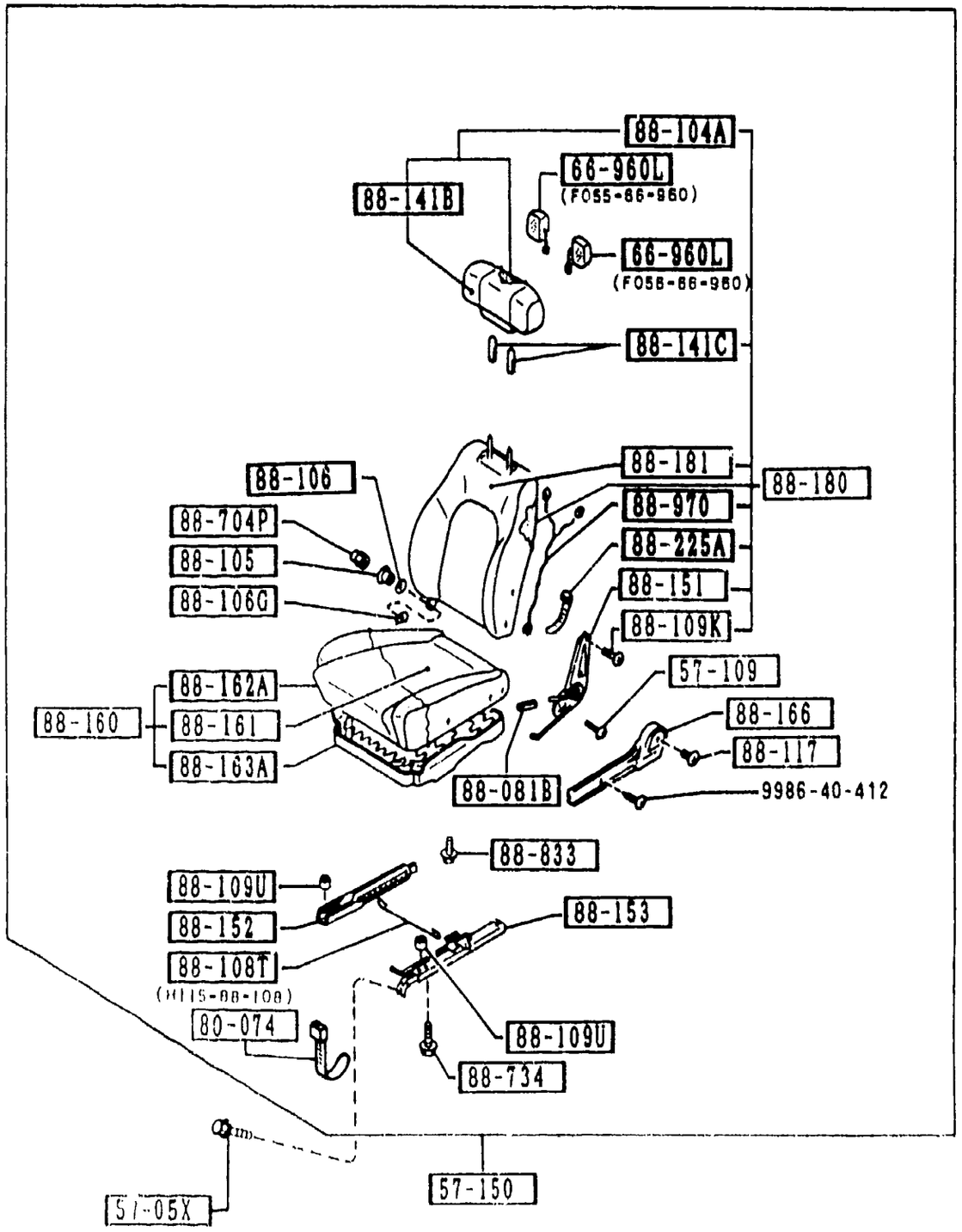


5700A -4 FRONT SEATS
(CONVERTIBLE)

| PART NO. | QTY | MODEL/RESTRICTION | MODEL/RESTRICTION | MODEL/RESTRICTION | FROM-TO |
|---|---|---|---|---|---|
| 88-152 | | ADJUSTER NO.3 | | | |
| FC01-88-152 | 1 | | | | |
| 88-153 | | ADJUSTER NO.4 | | | |
| FC34-88-153 | 1 | | | | |
| 88-160 | | CUSHION(L),FRT SEAT | | | |
| FC72-88-160 | 1 | | | | |
| 02 | INT- | FD8 BLACK | | | |
| 48 | INT- | FD9 BLUE | | | |
| 88-161 | | TRIM(L),SEAT CUSHION | | | |
| FB69-88-161 | 1 | | | | |
| 02 | INT- | FD8 BLACK | | | |
| 48 | INT- | FD9 BLUE | | | |
| 88-162A | | PAD(L),CUSHION-FRT | | | |
| FB44-88-162 | 1 | | | | |
| 88-163A | | FRAME(L),CUSHION-FRT | | | |
| FC34-88-163 | 1 | | | | |
| 88-166 | | COVER(L),KNUCKLE | | | |
| F044-88-177A | 1 | | | | |
| 02 | INT- | FD8 FE1 BLACK | | | |
| 48 | INT- | FD9 BLUE | | | |
| 88-180 | | BACK(L),FRONT SEAT | | | |
| FB69-88-180 | 1 | | | | |
| 02 | INT- | FD8 BLACK | | | |
| 48 | INT- | FD9 BLUE | | | |
| 88-181 | | TRIM(L),SEAT BACK | | | |
| FB69-88-181 | 1 | | | | |
| 02 | INT- | FD8 BLACK | | | |
| 48 | INT- | FD9 BLUE | | | |
| 88-225A | | BAND | | | |
| FB68-88-115 | 2 | | | | |

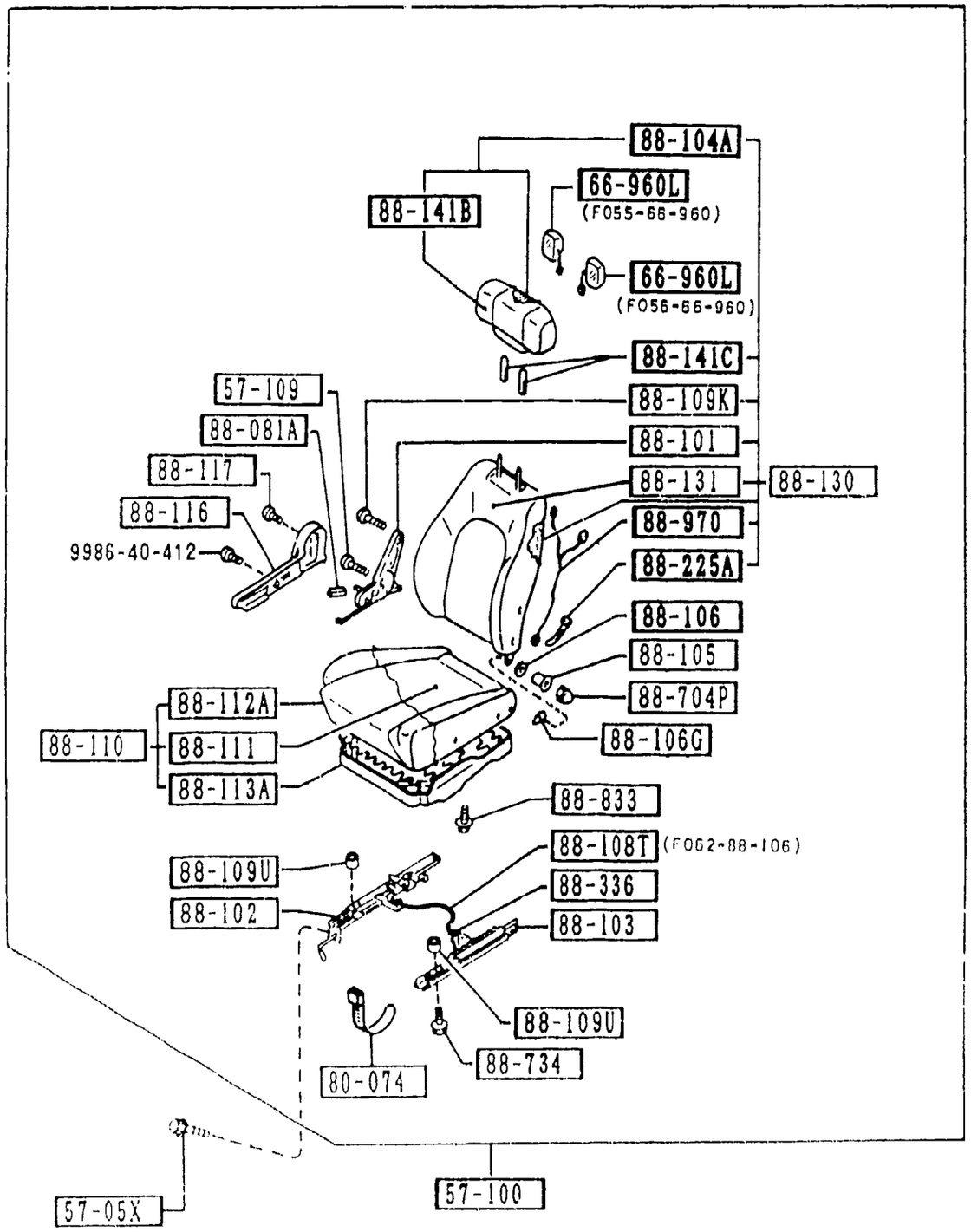


5700A -5 * FRONT SEATS
(CONVERTIBLE)

| PART NO. | QTY | MODEL/RESTRICTION | MODEL/RESTRICTION | MODEL/RESTRICTION | FROM-TO |
|---|---|---|---|---|---|
| 88-336 | | RING,STOPPER | | | |
| FA58-88-336 | 1 | | | | |
| 88-704P | | NUT | | | |
| B092-88-519 | 2 | | | | |
| 88-734 | | BOLT | | | |
| B092-88-818 | 4 | | | | |
| 88-833 | | BOLT,ADJUSTER-FRT SEAT | | | |
| F044-88-833 | 4 | | | | |
| 88-970 | | CORD,SHORT-FRT SEAT BACK | | | |
| FB68-88-970 | 2 | | | | |

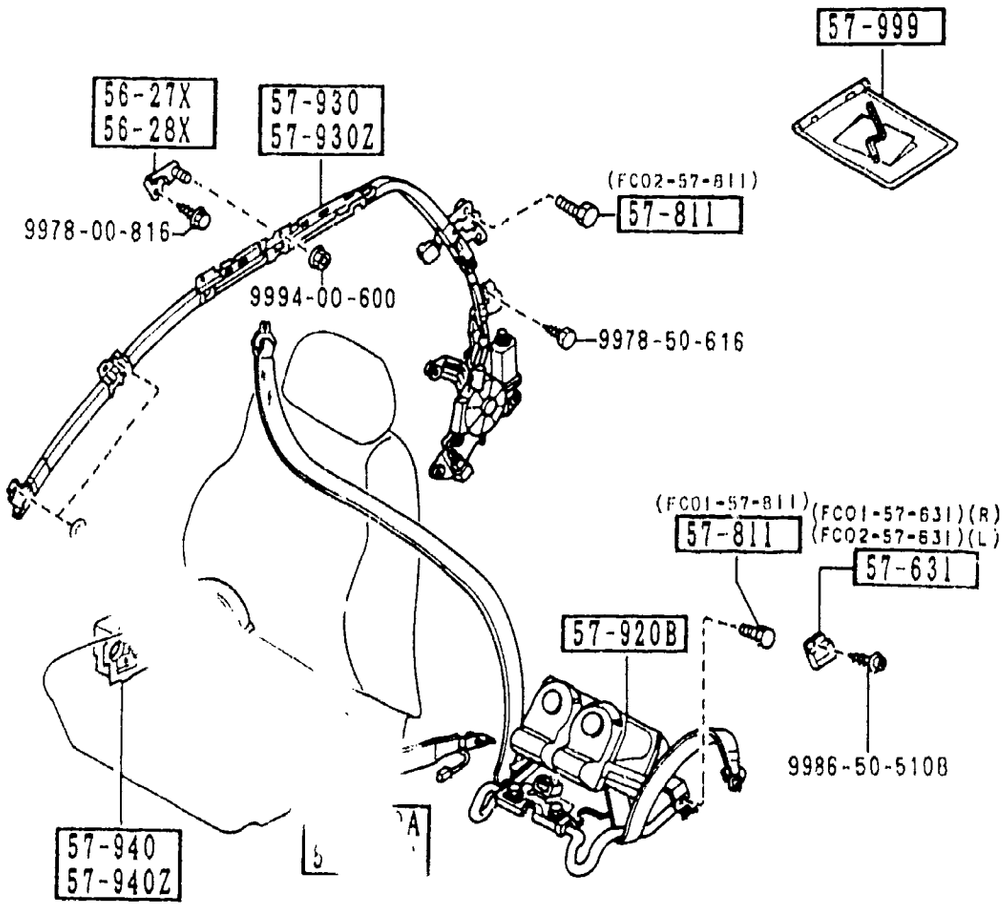


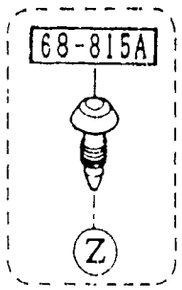


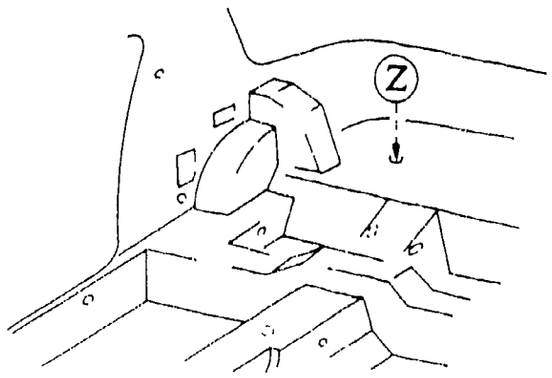




5790 -1 SEAT BELTS
(COUPE)

| PART NO. | QTY | MODEL/RESTRICTION | MODEL/RESTRICTION | MODEL/RESTRICTION | FROM-TO |
|---|---|---|---|---|---|
| 56-27X | | BRACKET(R),SEAT BELT | | | |
| FC01-56-27X | 1 | | | | |
| 56-28X | | BRACKET(L),SEAT BELT | | | |
| FC01-56-28X | 1 | | | | |
| 57-631 | | COVER,ANCHOR | | | |
| FC01-57-631 | 1 | | | | |
| 02 | INT- | FD8 FE1 BLACK | | | |
| 48 | INT- | FD9 BLUE | | | |
| FC02-57-631 | 1 | | | | |
| 02 | INT- | FD8 FE1 BLACK | | | |
| 48 | INT- | FD9 BLUE | | | |
| 57-811 | | BOLT,SEAT BELT | | | |
| FC01-57-811 | 2 | | | | |
| FC02-57-811 | 2 | | | | |
| 57-900A | | BELT'A'(R),FRT SEAT | | | |
| FC01-57-620A | 1 | | | | |
| 02 | INT- | FD8 FE1 BLACK | | | |
| 48 | INT- | FD9 BLUE | | | |
| 57-920A | | BELT'A'(L),FRT SEAT | | | |
| FC01-57-680A | 1 | | | | |
| 02 | INT- | FD8 FE1 BLACK | | | |
| 48 | INT- | FD9 BLUE | | | |
| 57-920B | | BELT,AUTO SHOULDER-RETRAC | | | |
| FC01-57-920B | 1 | | | | |
| 02 | INT- | FD8 BLACK | | | |
| 48 | INT- | FD9 BLUE | | | |
| 57-930 | | BELT'B'(R),AUTO SHOULDER | | | |
| FC01-57-930B | 1 | | | | |
| 57-930Z | | BELT'B'(L),AUTO SHOULDER | | | |
| FC01-57-990B | 1 | | | | |

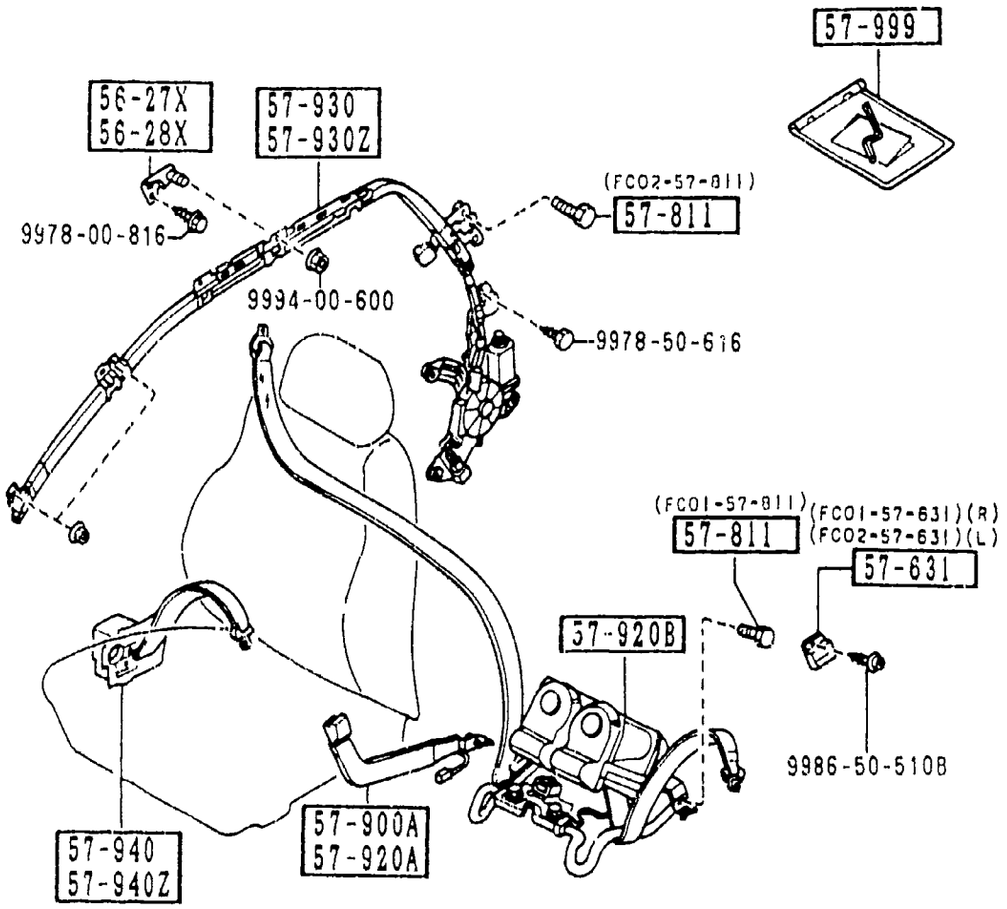


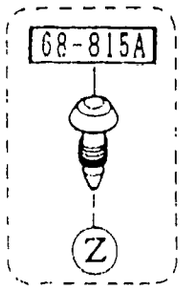


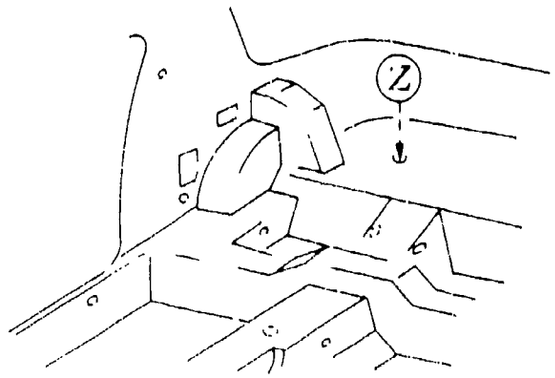


5790 -2 * SEAT BELTS
(COUPE)

| PART NO. | QTY | MODEL/RESTRICTION | MODEL/RESTRICTION | MODEL/RESTRICTION | FROM-TO |
|---|---|---|---|---|---|
| 57-940 | | BELT(R),LAP | | | |
| FC01-57-940B | 1 | | | | |
| 02 | INT- | FD8 BLACK | | | |
| 48 | INT- | FD9 BLUE | | | |
| 57-940Z | | BELT(L),LAP | | | |
| FC01-57-980B | 1 | | | | |
| 02 | INT- | FD8 BLACK | | | |
| 48 | INT- | FD9 BLUE | | | |
| 57-999 | | HANDLE,EMERGENCY | | | |
| FC01-57-999A | 1 | | | | |
| 68-815A | | TACKER | | | |
| 1011-68-815 | 2 | | | | |

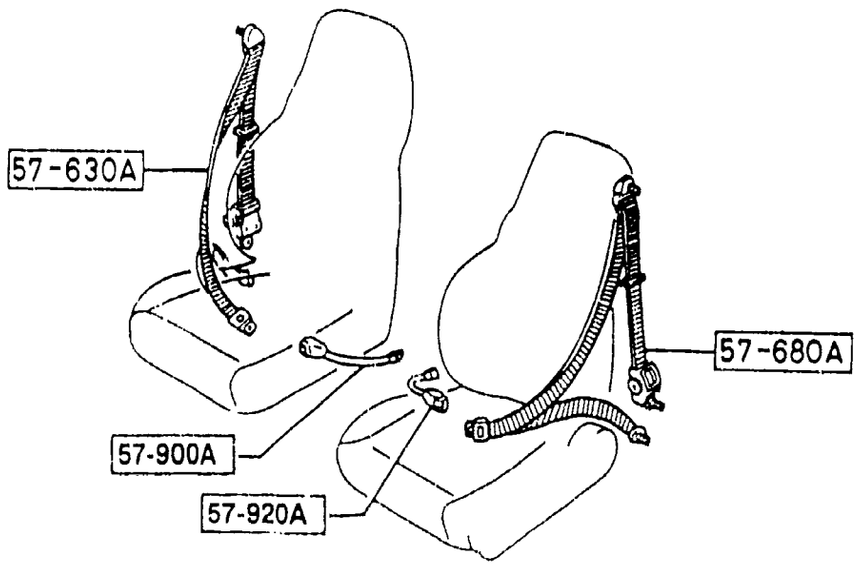


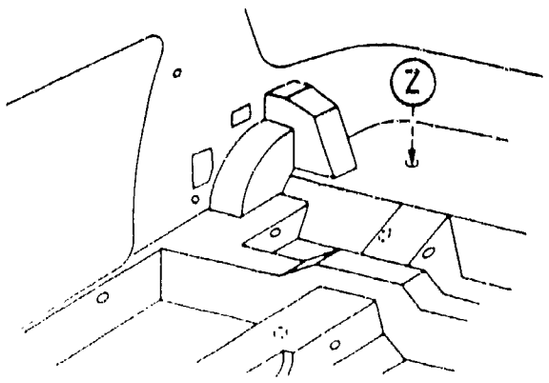


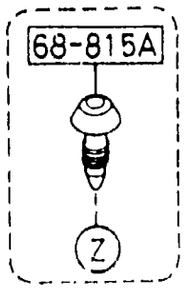


5790A -1 * SEAT BELTS
(CONVERTIBLE)

| PART NO. | QTY | MODEL/RESTRICTION | MODEL/RESTRICTION | MODEL/RESTRICTION | FROM-TO |
|---|---|---|---|---|---|
| 57-630A | | BELT'B'(R),FRT SEAT | | | |
| FC33-57-630 | 1 | | | | |
| 00 | INT- | FD8 BLACK | | | |
| 48 | INT- | FD9 BLUE | | | |
| 57-680A | | BELT'B'(L),FRT SEAT | | | |
| FC66-57-690A | 1 | | | | |
| 00 | INT- | FD8 BLACK | | | |
| 48 | INT- | FD9 BLUE | | | |
| 57-900A | | BELT'A'(R),FRT SEAT | | | |
| FB10-57-620C | 1 | | | | |
| 02 | INT- | FD8 FE1 BLACK | | | |
| 48 | INT- | FD9 BLUE | | | |
| 57-920A | | BELT'A'(L),FRT SEAT | | | |
| FB10-57-680A | 1 | | | | |
| 02 | INT- | FD8 FE1 BLACK | | | |
| 48 | INT- | FD9 BLUE | | | |
| 68-815A | | TACKER | | | |
| 1011-68-815 | 2 | | | | |

5795 AIR BAG

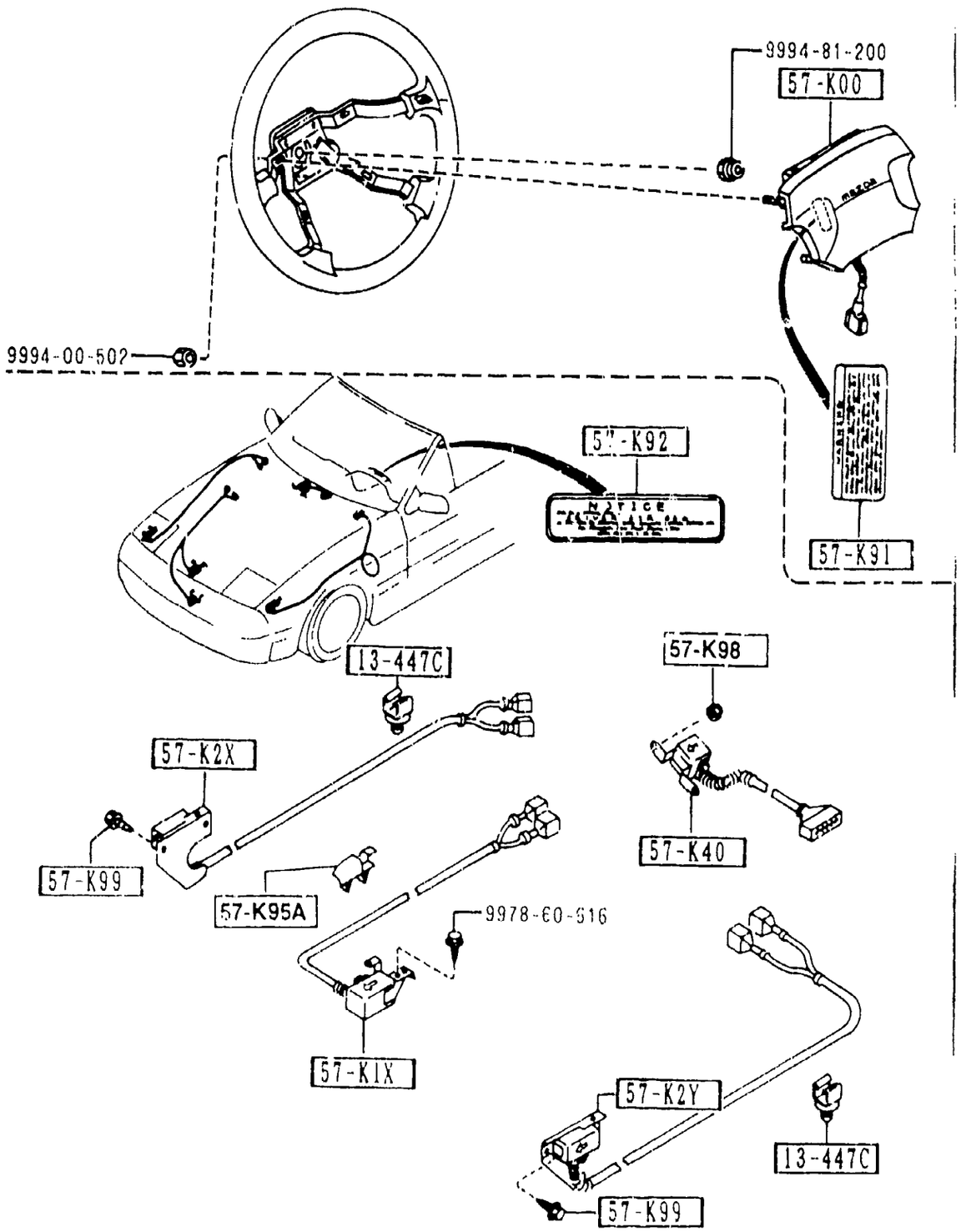


| PART NO. | QTY | MODEL/RESTRICTION | MODEL/RESTRICTION | MODEL/RESTRICTION | FROM-TO |
|---|---|---|---|---|---|
| 13-447C | | CLAMP,HOSE | | | |
| *JE39-13-447 | 2 | | | | |
| 57-K00 | | MODULE,AIR BAG | | | |
| FC66-57-K00A | 1 | | | | |
| 57-K1X | | SENSOR,AIR BAG | | | |
| FC66-57-K1XD | 1 | | | | |
| 57-K2X | | SENSOR(R),AIR BAG | | | |
| FC66-57-K2XG | 1 | | | | |
| 57-K2Y | | SENSOR(L),AIR BAG | | | |
| FC66-57-K2YG | 1 | | | | |
| 57-K40 | | SENSOR,AIR BAG-INNER | | | |
| FC66-57-K40B | 1 | | | | |
| 57-K91 | | LABEL'A',CAUTION-A/B | | | |
| NA01-57-K91 | 1 | | | | |
| 57-K92 | | LABEL'B',CAUTION-A/B | | | |
| NA01-57-K92 | 1 | | | | |
| 57-K95A | | CLIP,AIR BAG | | | |
| FC67-57-K95 | 1 | | | | |
| 57-K98 | | NUT | | | |
| FC66-57-K98 | 2 | | | | |
| 57-K99 | | SCREW,TAPPING | | | |
| FC66-57-K99 | 4 | | | | |

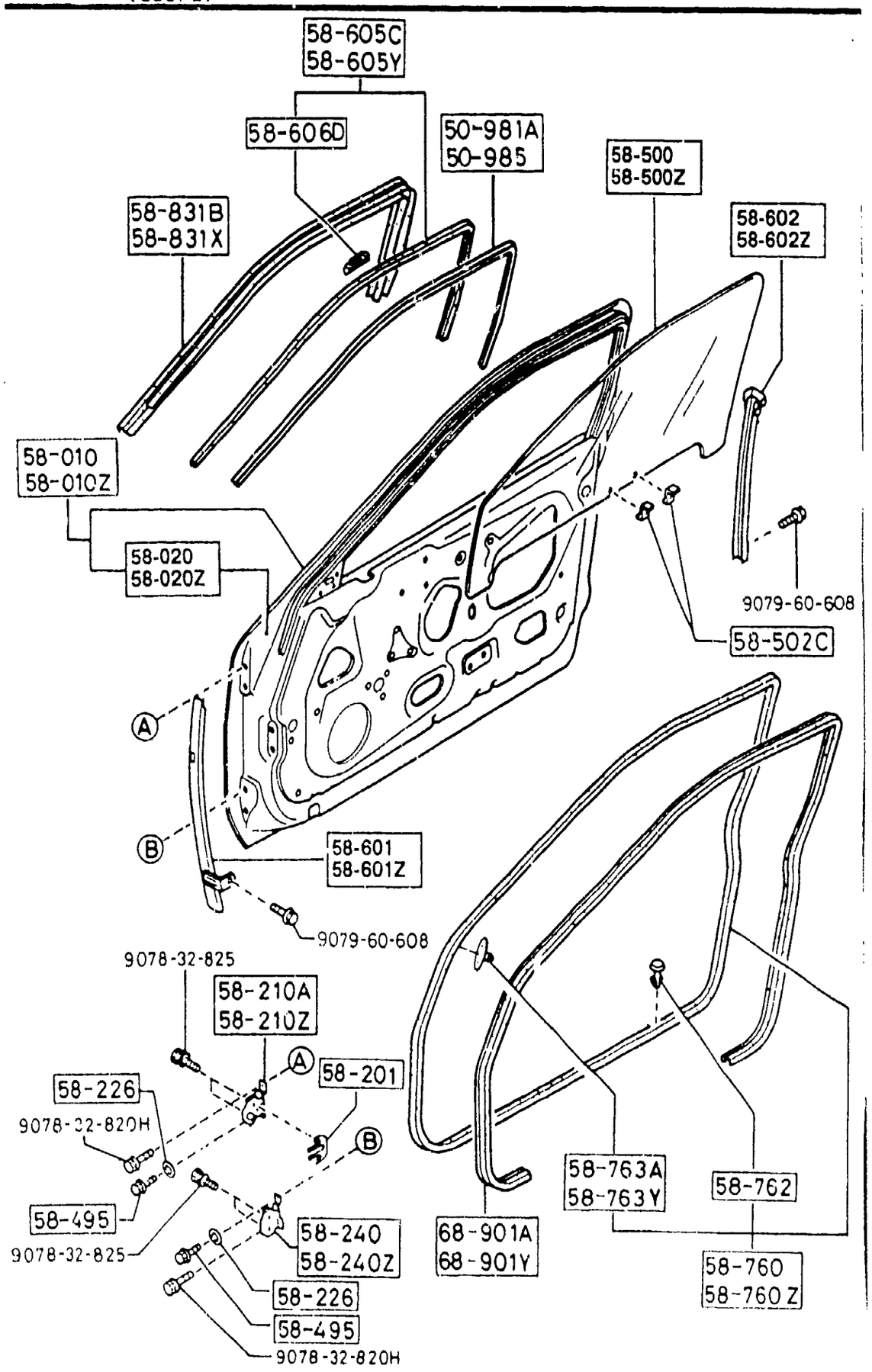




| PART NO. | QTY | MODEL/RESTRICTION | MODEL/RESTRICTION | MODEL/RESTRICTION | FROM-TO |
|---|---|---|---|---|---|
| 50-981A | | MOULD(R),SASH-DOOR | | | |
| FB01-50-981B | 1 | | | | |
| 50-985 | | MOULD(L),SASH-DOOR | | | |
| FB01-50-985B | 1 | | | | |
| 58-010 | | BODY(R),FRONT DOOR | | | |
| FC01-58-020A | 1 | | | | -0A01 |
| AN(FC01-58-020B) | | | | | |
| FC01-58-020B | 1 | | | | 0A01- |
| 58-010Z | | BODY(L),FRONT DOOR | | | |
| FC01-59-020A | 1 | | | | -0A01 |
| AN(FC01-59-020B) | | | | | |
| FC01-59-020B | 1 | | | | 0A01- |
| 58-020 | | PANEL(R),OUT.-FRT DOOR | | | |
| FC01-58-031 | 1 | | | | -0A01 |
| AN(FC01-58-031A) | | | | | |
| FC01-58-031A | 1 | | | | 0A01- |
| 58-020Z | | PANEL(L),OUT.-FRT DOOR | | | |
| FC01-59-031 | 1 | | | | -0A01 |
| AN(FC01-59-031A) | | | | | |
| FC01-59-031A | 1 | | | | 0A01- |
| 58-201 | | SHIM,HINGE-DOOR | | | |
| B092-58-201A | 2 | | | | |
| 58-210A | | HINGE,DOOR | | | |
| FB67-58-210 | 1 | | | | |
| 58-210Z | | HINGE(L),DOOR-UPPER | | | |
| FB67-59-210 | 1 | | | | |
| 58-226 | | WASHER,SETTING | | | |
| GJ21-58-226 | 4 | | | | |
| 58-240 | | HINGE(R),DOOR-LOWER | | | |
| FB67-58-240 | 1 | | | | |

0A01 FC3***-902450

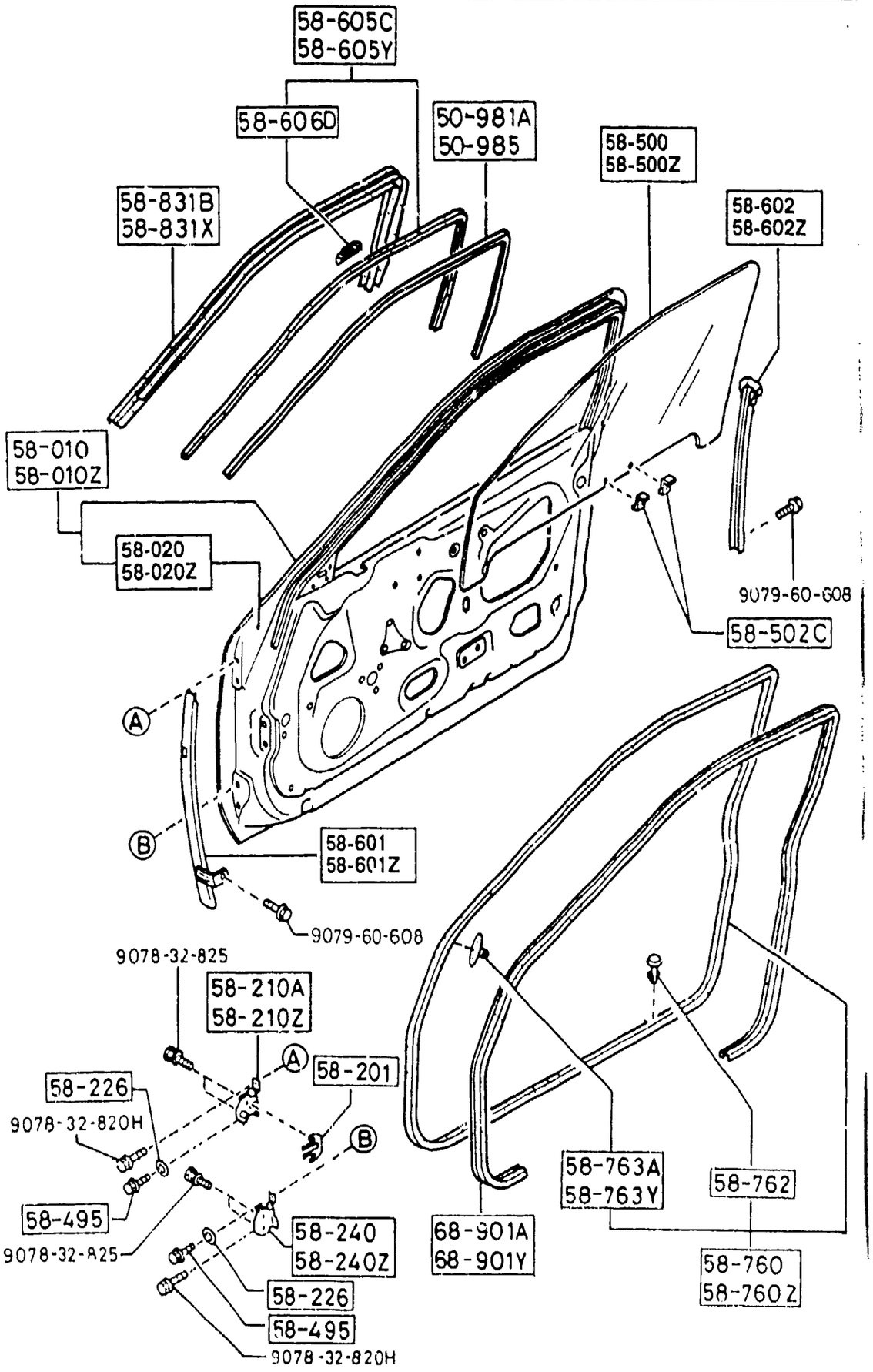




| PART NO. | QTY | MODEL/RESTRICTION | MODEL/RESTRICTION | MODEL/RESTRICTION | FROM-TO |
|---|---|---|---|---|---|
| 58-240Z<br>FB67-59-240 | 1 | HINGE(L),DOOR-LOWER | | | |
| 58-495<br>BA54-58-225 | 4 | BOLT,SET | | | |
| 58-500<br>FB01-58-511 | 1 | GLASS(R),DOOR-FRT<br>BLUE | | | |
| 58-500Z<br>FB01-59-511 | 1 | GLASS(L),DOOR-FRT | | | |
| 58-502C<br>S084-58-502 | 4 | GROMMET,SCREW | | | |
| 58-601<br>FB01-58-603B | 1 | GUIDE'A'(R),GLASS | | | |
| 58-601Z<br>FB01-59-603B | 1 | GUIDE'A'(L),GLASS | | | |
| 58-602<br>FB01-58-604A | 1 | GUIDE'B'(R),GLASS | | | |
| 58-602Z<br>FB01-59-604A | 1 | GUIDE'B'(L),GLASS | | | |
| 58-605C<br>FB01-58-60XD | 1 | CHANNEL(R),GLASS RUN | | | |
| 58-605Y<br>FB01-59-60XD | 1 | CHANNEL(L),GLASS RUN | | | |
| 58-606D<br>FB01-58-606A | 2 | ADJUSTER,GLASS-FRT DOOR | | | |
| 58-760<br>FB01-58-760C | 1 | WEATHERSTRIP(R),DOOR | | | |
| 58-760Z | | WEATHERSTRIP(L),DOOR | | | |

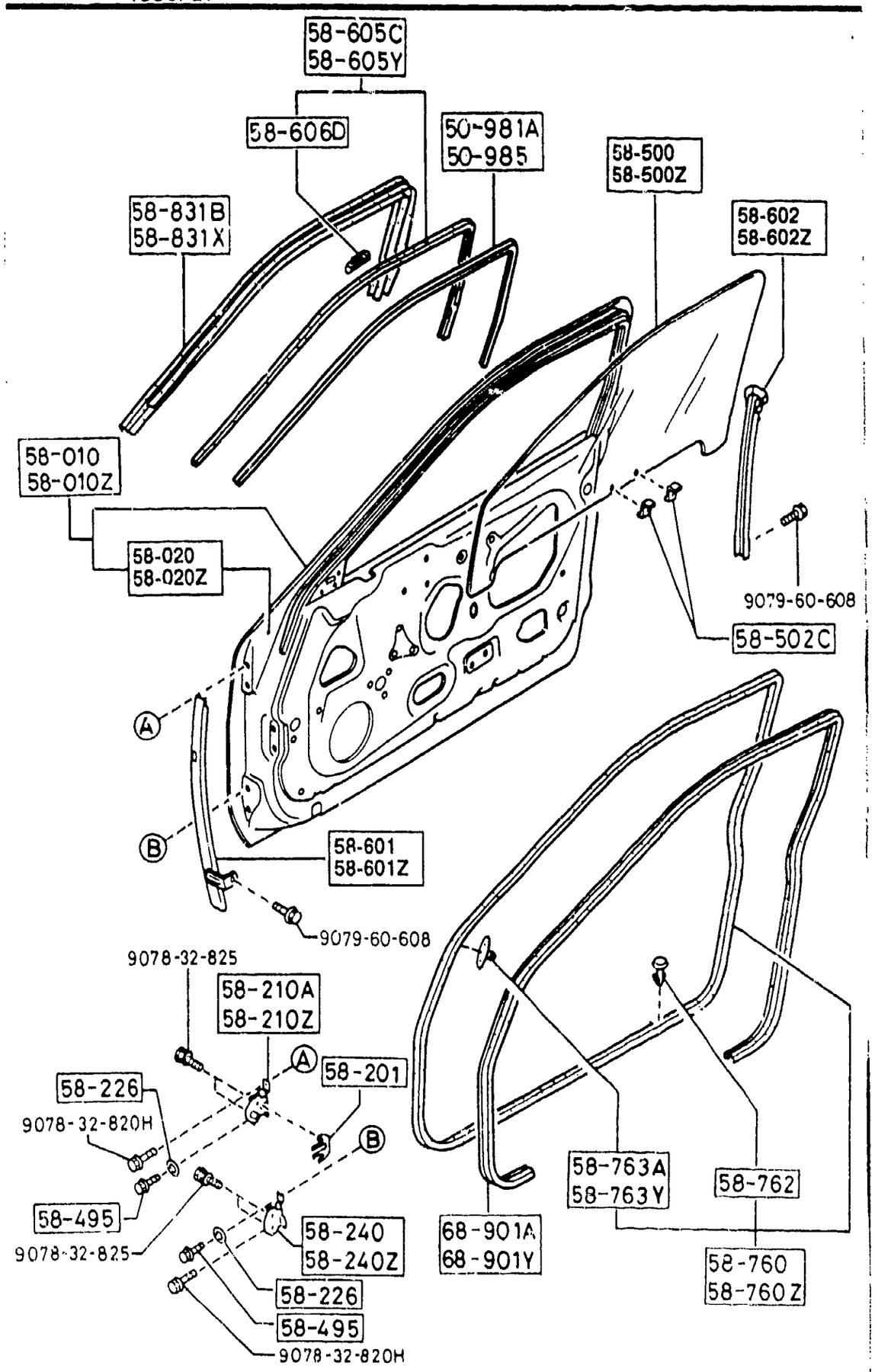




| PART NO. | QTY | MODEL/RESTRICTION | MODEL/RESTRICTION | MODEL/RESTRICTION | FROM-TO |
|---|---|---|---|---|---|
| CONT'D | | | | | |
| FB01-59-760C | 1 | | | | |
| +----------+ | | | | | |
| \| 58-762 \| | | FASTENER | | | |
| +----------+ | | | | | |
| G031-58-762 | 52 | | | | |
| +----------+ | | | | | |
| \| 58-763A \| | | FASTENER(R) | | | |
| +----------+ | | | | | |
| FB02-58-762A | 2 | | | | |
| +----------+ | | | | | |
| \| 58-763Y \| | | FASTENER(L) | | | |
| +----------+ | | | | | |
| FB02-59-762A | 2 | | | | |
| +----------+ | | | | | |
| \| 58-831B \| | | WEATHERSTRIP(R),RAIN RAIL | | | |
| +----------+ | | | | | |
| FB01-58-831E | 1 | | | | |
| +----------+ | | | | | |
| \| 58-831X \| | | WEATHERSTRIP(L),RAIN RAIL | | | |
| +----------+ | | | | | |
| FB01-59-831E | 1 | | | | |
| +----------+ | | | | | |
| \| 68-901A \| | | WELT(R),SEAMING | | | |
| +----------+ | | | | | |
| FB01-68-911 | 1 | | | | |
| 02 | INT- | FD8 FE1 BLACK | | | |
| 48 | INT- | FD9 BLUE | | | |
| +----------+ | | | | | |
| \| 68-901Y \| | | WELT(L),SEAMING | | | |
| +----------+ | | | | | |
| FB01-68-912 | 1 | | | | |
| 02 | INT- | FD8 FE1 BLACK | | | |
| 48 | INT- | FD9 BLUE | | | |

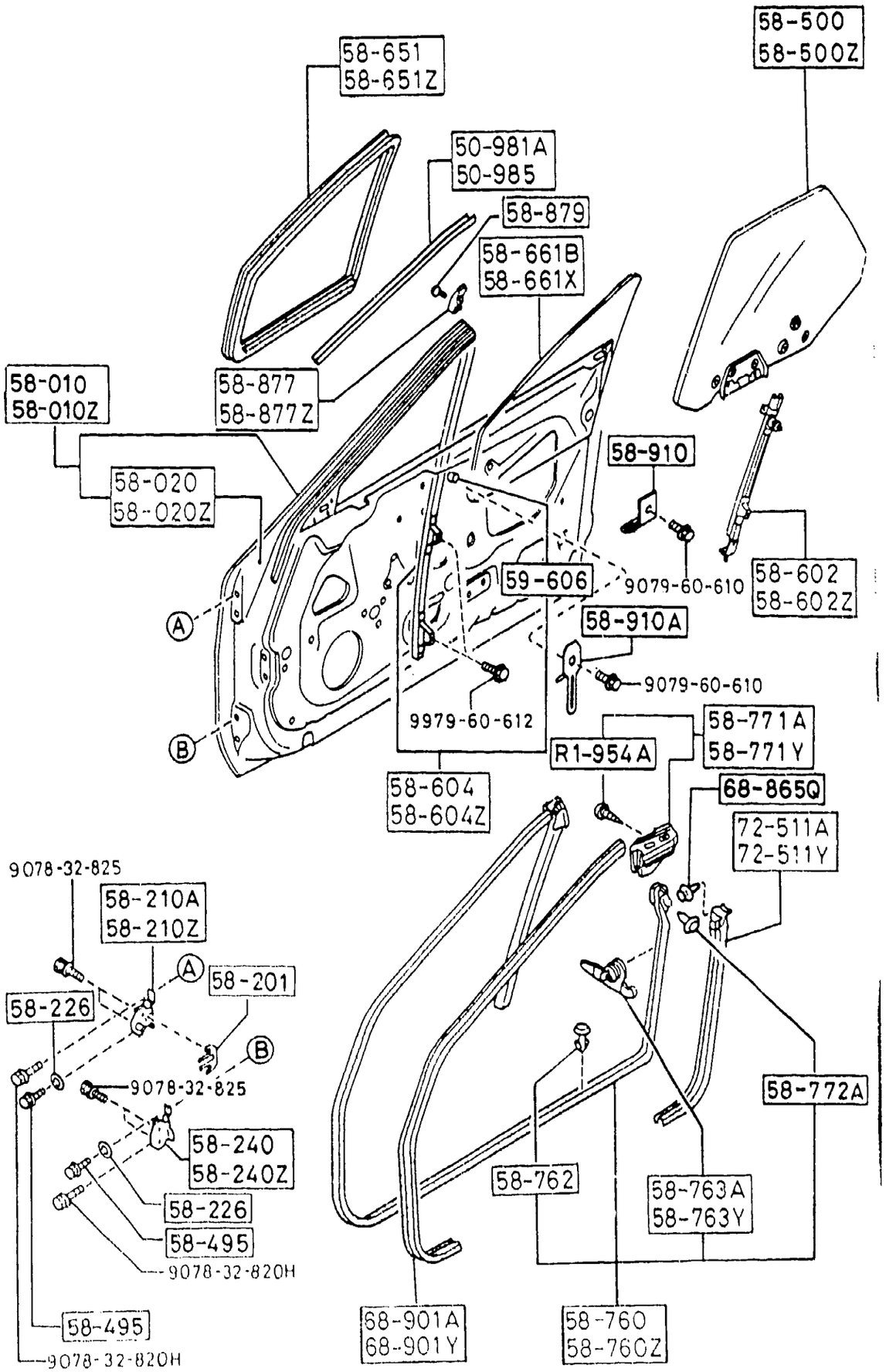




| PART NO. | QTY | MODEL/RESTRICTION | MODEL/RESTRICTION | MODEL/RESTRICTION | FROM-TO |
|---|---|---|---|---|---|
| R1-954A | | HOOK,SCREW-QTR TRIM | | | |
| FB67-R1-954A | 2 | | | | |
| 50-981A | | MOULD(R),SASH-DOOR | | | |
| FB67-50-981A | 1 | | | | |
| 50-985 | | MOULD(L),SASH-DOOR | | | |
| FB67-50-985A | 1 | | | | |
| 58-010 | | BODY(R),FRONT DOOR | | | |
| FC33-58-020A | 1 | | | | -0A01 |
| AN(FC33-58-020B) | | | | | |
| FC33-58-020B | 1 | | | | 0A01- |
| 58-010Z | | BODY(L),FRONT DOOR | | | |
| FC33-59-020A | 1 | | | | -0A01 |
| AN(FC33-59-020B) | | | | | |
| FC33-59-020B | 1 | | | | 0A01- |
| 58-020 | | PANEL(R),OUT.-FRT DOOR | | | |
| FC33-58-031 | 1 | | | | -0A01 |
| AN(FC33-58-031A) | | | | | |
| FC33-58-031A | 1 | | | | 0A01- |
| 58-020Z | | PANEL(L),OUT.-FRT DOOR | | | |
| FC33-59-031 | 1 | | | | -0A01 |
| AN(FC33-59-031A) | | | | | |
| FC33-59-031A | 1 | | | | 0A01- |
| 58-201 | | SHIM,HINGE-DOOR | | | |
| B092-58-201A | 2 | | | | |
| 58-210A | | HINGE,DOOR | | | |
| FB67-58-210 | 1 | | | | |
| 58-210Z | | HINGE(L),DOOR-UPPER | | | |
| FB67-59-210 | 1 | | | | |
| 58-226 | | WASHER,SETTING | | | |
| GJ21-58-226 | 4 | | | | |

0A01 FC3***-902450

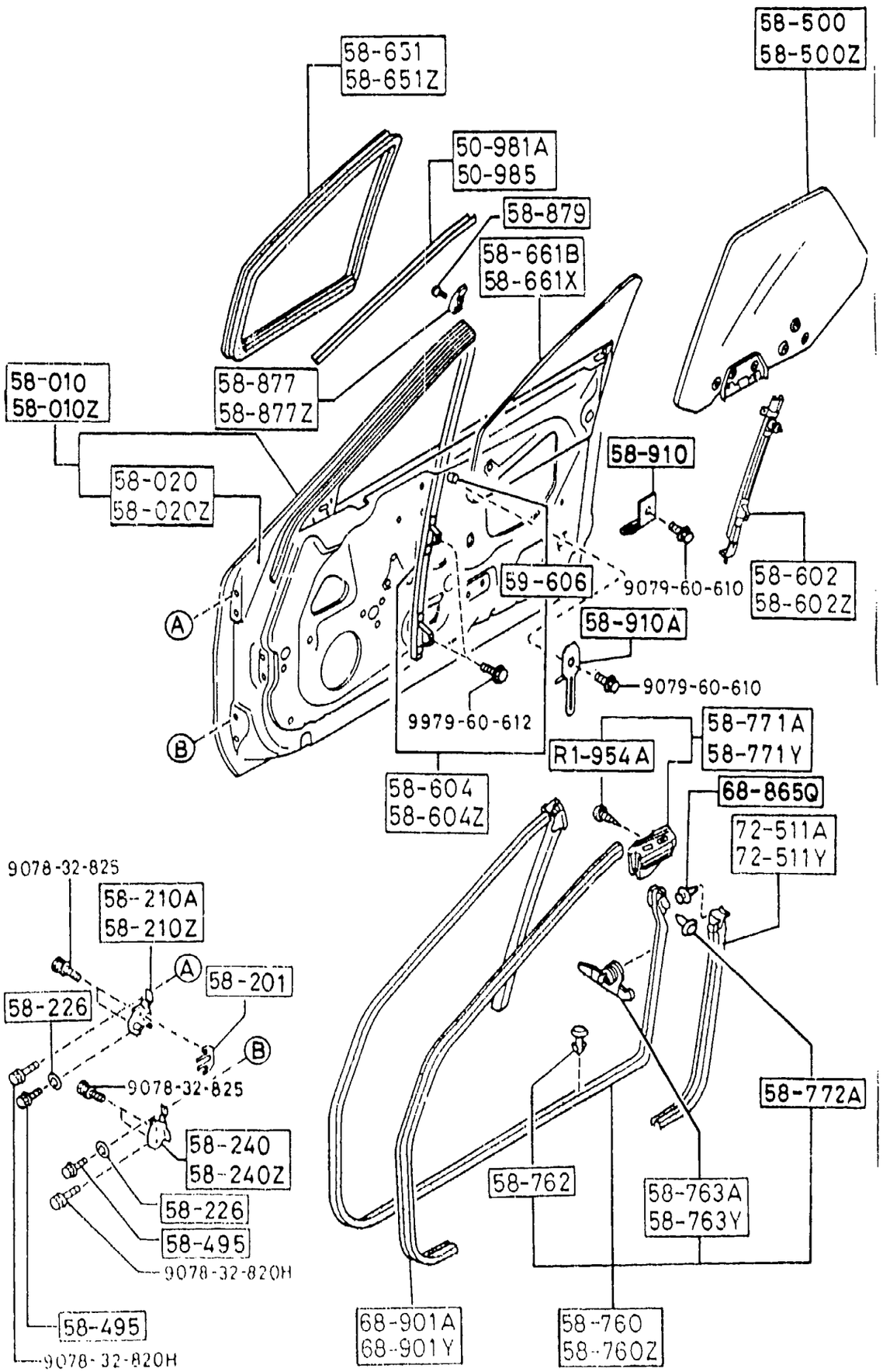


AUFA03



| PART NO. | QTY | MODEL/RESTRICTION | MODEL/RESTRICTION | MODEL/RESTRICTION | FROM-TO |
|---|---|---|---|---|---|
| 58-240<br>FB67-58-240 | 1 | HINGE(R),DOOR-LOWER | | | |
| 58-240Z<br>FB67-59-240 | 1 | HINGE(L),DOOR-LOWER | | | |
| 58-495<br>BA54-58-225 | 4 | BOLT,SET | | | |
| 58-500<br>FB67-58-510C | 1 | GLASS(R),DOOR-FRT | | | |
| 58-500Z<br>FB67-59-510C | 1 | GLASS(L),DOOR-FRT | | | |
| 58-602<br>FB67-58-61XB | 1 | GUIDE'B'(R),GLASS | | | |
| 58-602Z<br>FB67-59-61XB | 1 | GUIDE'B'(L),GLASS | | | |
| 58-604<br>FB67-58-6A0A | 1 | CHANNEL(R),DIVISION-DOOR | | | |
| 58-604Z<br>FB67-59-6A0A | 1 | CHANNEL(L),DIVISION-DOOR | | | |
| 58-651<br>FB67-58-651 | 1 | WEATHERSTRIP(R) | | | |
| 58-651Z<br>FB67-59-651 | 1 | WEATHERSTRIP(L) | | | |
| 58-661B<br>FB67-58-661B | 1 | GLASS(R),QUARTER-F.DOOR | | | |
| 58-661X<br>FB67-59-661B | 1 | GLASS(L),QUARTER-F.DOOR | | | |
| 58-760<br>FB67-58-760B | 1 | WEATHERSTRIP(R),DOOR | | | |

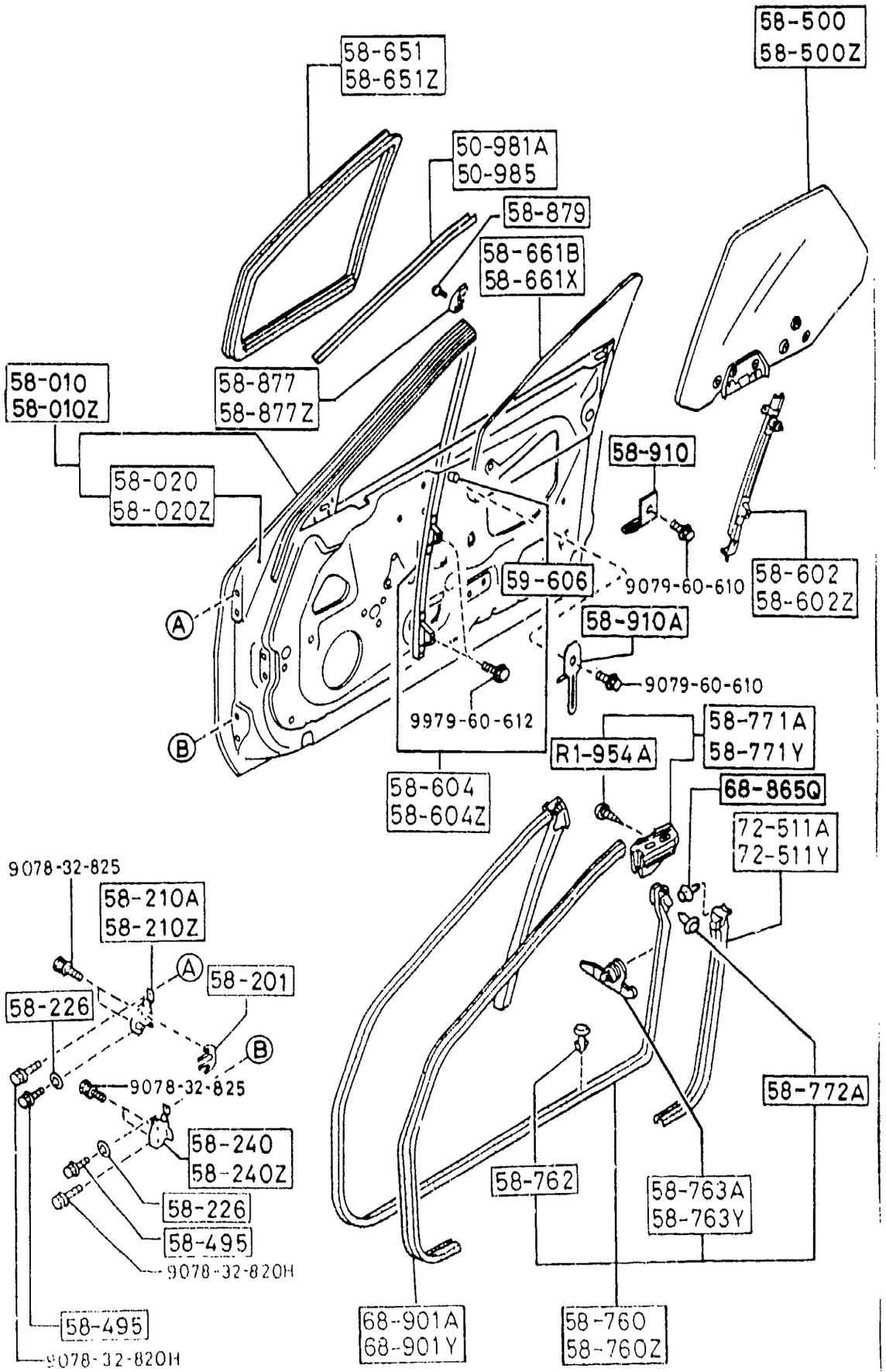


AUFA03



| PART NO. | QTY | MODEL/RESTRICTION | MODEL/RESTRICTION | MODEL/RESTRICTION | FROM-TO |
|---|---|---|---|---|---|
| 58-760Z<br>FB67-59-760B | 1 | WEATHERSTRIP(L),DOOR | | | |
| 58-762<br>G031-58-762 | 52 | FASTENER | | | |
| 58-763A<br>FB02-58-762A | 2 | FASTENER(R) | | | |
| 58-763Y<br>FB02-59-762A | 2 | FASTENER(L) | | | |
| 58-771A<br>FB67-58-770F | 1 | WEATHERSTRIP(R),CAB. SIDE | | | |
| 58-771Y<br>FB67-59-770F | 1 | WEATHERSTRIP(L),CAB. SIDE | | | |
| 58-772A<br>1011-58-772 | 4 | FASTENER | | | |
| 58-877<br>FB67-58-877C | 1 | PROTECTOR(R),DOOR SASH | | | |
| 58-877Z<br>FB67-59-877C | 1 | PROTECTOR(L),DOOR SASH | | | |
| 58-879<br>FB67-58-879 | 4 | SCREW,PROTECTOR-SASH | | | |
| 58-910<br>H272-58-911 | 2 | STOPPER,GLASS | | | |
| 58-910A<br>FB67-58-910 | 2 | STOPPER,GLASS | | | |
| 59-606<br>FB67-59-606 | 2 | PROTR,STUD-DIVISION CHAN | | | |
| 68-865Q<br>GJ21-68-885B | 2 | FASTENER | | | |

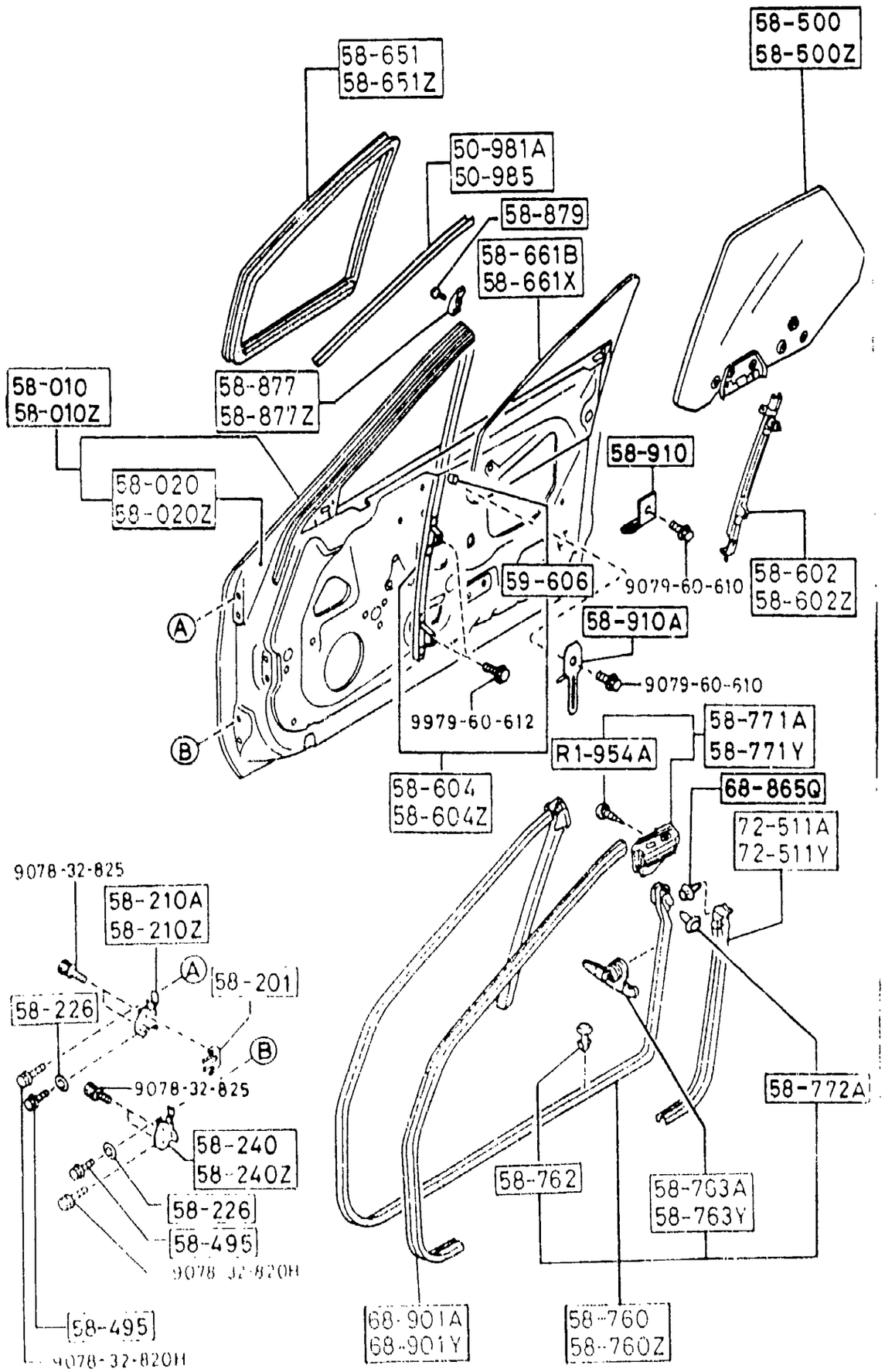




| PART NO. | QTY | MODEL/RESTRICTION | MODEL/RESTRICTION | MODEL/RESTRICTION | FROM-TO |
|---|---|---|---|---|---|
| CONT'D | | | | | |
| 02 | INT- | FD8 FE1 BLACK | | | |
| 48 | INT- | FD9 BLUE | | | |
| +---------+ | | | | | |
| \| 68-901A \| | | WELT(R),SEAMING | | | |
| +---------+ | | | | | |
| FB67-68-911C | 1 | | | | |
| 02 | INT- | FD8 FE1 BLACK | | | |
| 48 | INT- | FD9 BLUE | | | |
| +---------+ | | | | | |
| \| 68-901Y \| | | WELT(L),SEAMING | | | |
| +---------+ | | | | | |
| FB67-68-912C | 1 | | | | |
| 02 | INT- | FD8 FE1 BLACK | | | |
| 48 | INT- | FD9 BLUE | | | |
| +---------+ | | | | | |
| \| 72-511A \| | | WELT(R),SEAMING | | | |
| +---------+ | | | | | |
| FB67-68-921A | 1 | | | | |
| 02 | INT- | FD8 FE1 BLACK | | | |
| 48 | INT- | FD9 BLUE | | | |
| +---------+ | | | | | |
| \| 72-511Y \| | | WELT(L),SEAMING | | | |
| +---------+ | | | | | |
| FB67-68-922A | 1 | | | | |
| 02 | INT- | FD8 FE1 BLACK | | | |
| 48 | INT- | FD9 BLUE | | | |

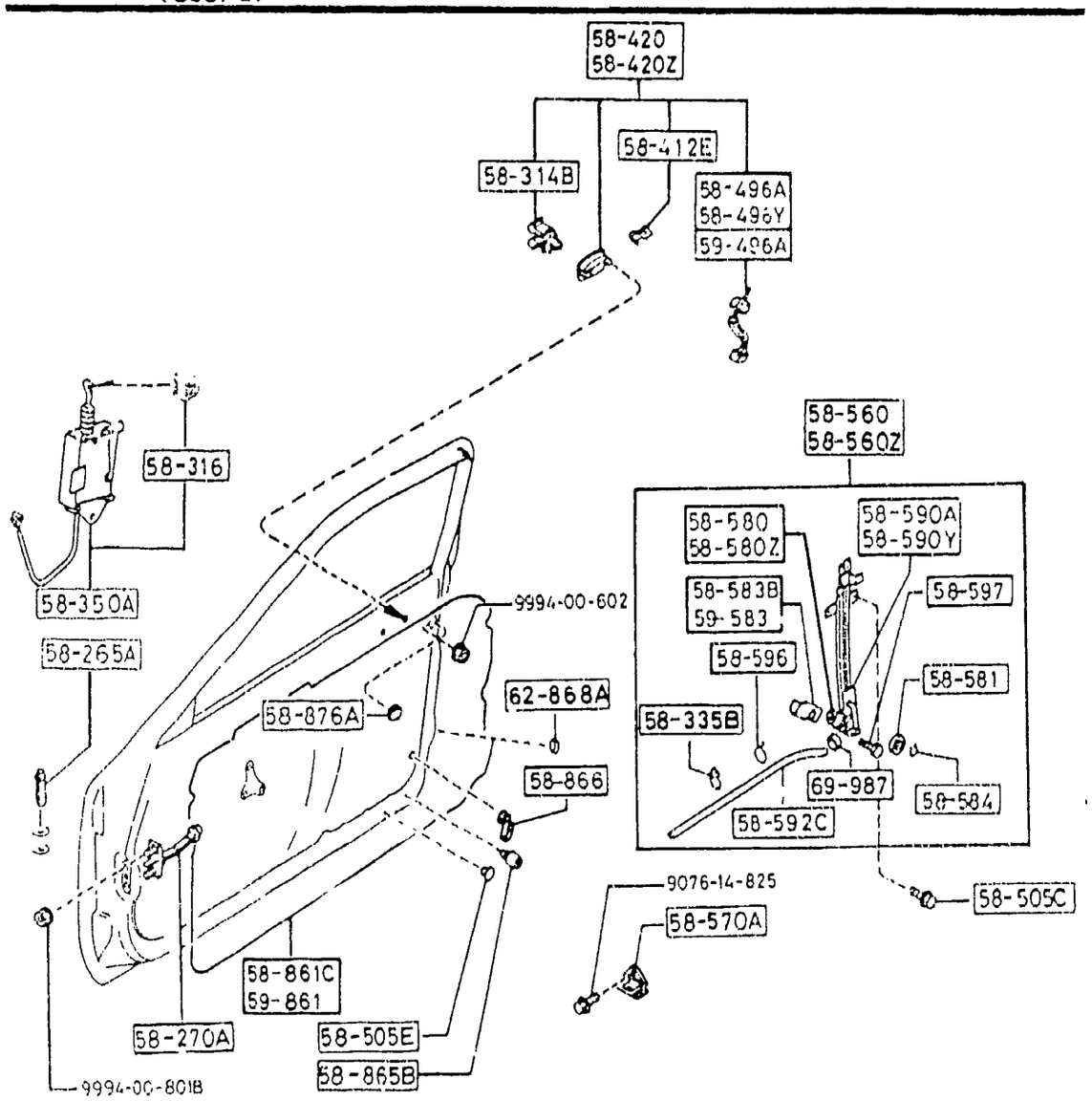


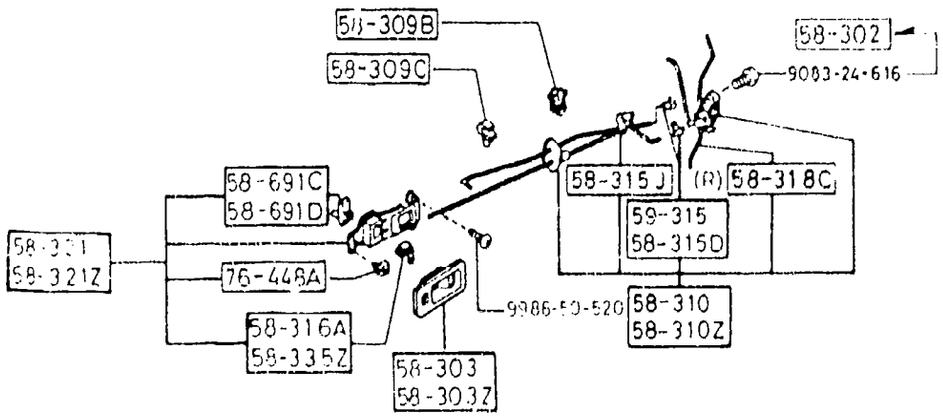


AUFA03

5830 -1 FRONT DOOR MECHANISMS
(COUPE)

| PART NO. | QTY | MODEL/RESTRICTION | MODEL/RESTRICTION | MODEL/RESTRICTION | FROM-TO |
|---|---|---|---|---|---|
| 58-265A | | PIN,CHECKER | | | |
| H260-58-265C | 2 | | | | |
| 58-270A | | CHECKER,DOOR | | | |
| FB01-58-270B | 2 | | | | |
| 58-302 | | SCREW,TAPPING-DOOR LOCK | | | |
| HG30-58-302A | 6 | | | | 1601- |
| 58-303 | | COVER(R),IN.HANDLE | | | |
| FB01-58-303B | 1 | | | | |
| 02 | INT- | FD8 FE1 BLACK | | | |
| 48 | INT- | FD9 BLUE | | | |
| 58-303Z | | COVER(L),IN.HANDLE | | | |
| FB01-59-303B | 1 | | | | |
| 02 | INT- | FD8 FE1 BLACK | | | |
| 48 | INT- | FD9 BLUE | | | |
| 58-309B | | HOLDER(UP.),ROD-IN.HANDLE | | | |
| FB02-58-309 | 2 | | | | |
| 58-309C | | HOLDER(LOW),ROD-IN.HANDLE | | | |
| FB01-58-309A | 2 | | | | |
| 58-310 | | LOCK(R),DOOR | | | |
| FC01-58-310 | 1 | | | | |
| 58-310Z | | LOCK(L),DOOR | | | |
| FC01-59-310 | 1 | | | | |
| 58-314B | | JOINT | | | |
| H043-72-411 | 2 | (W/BURGLAR ALARM) | | | |
| 58-315D | | CLIP (R) | | | |
| G030-58-315 | 5 | | | | |
| 58-315J | | CLIP | | | |
| H001-58-315 | 2 | | | | |

1601 FC3***-907848

CAT. AUFA03-07

1993-12

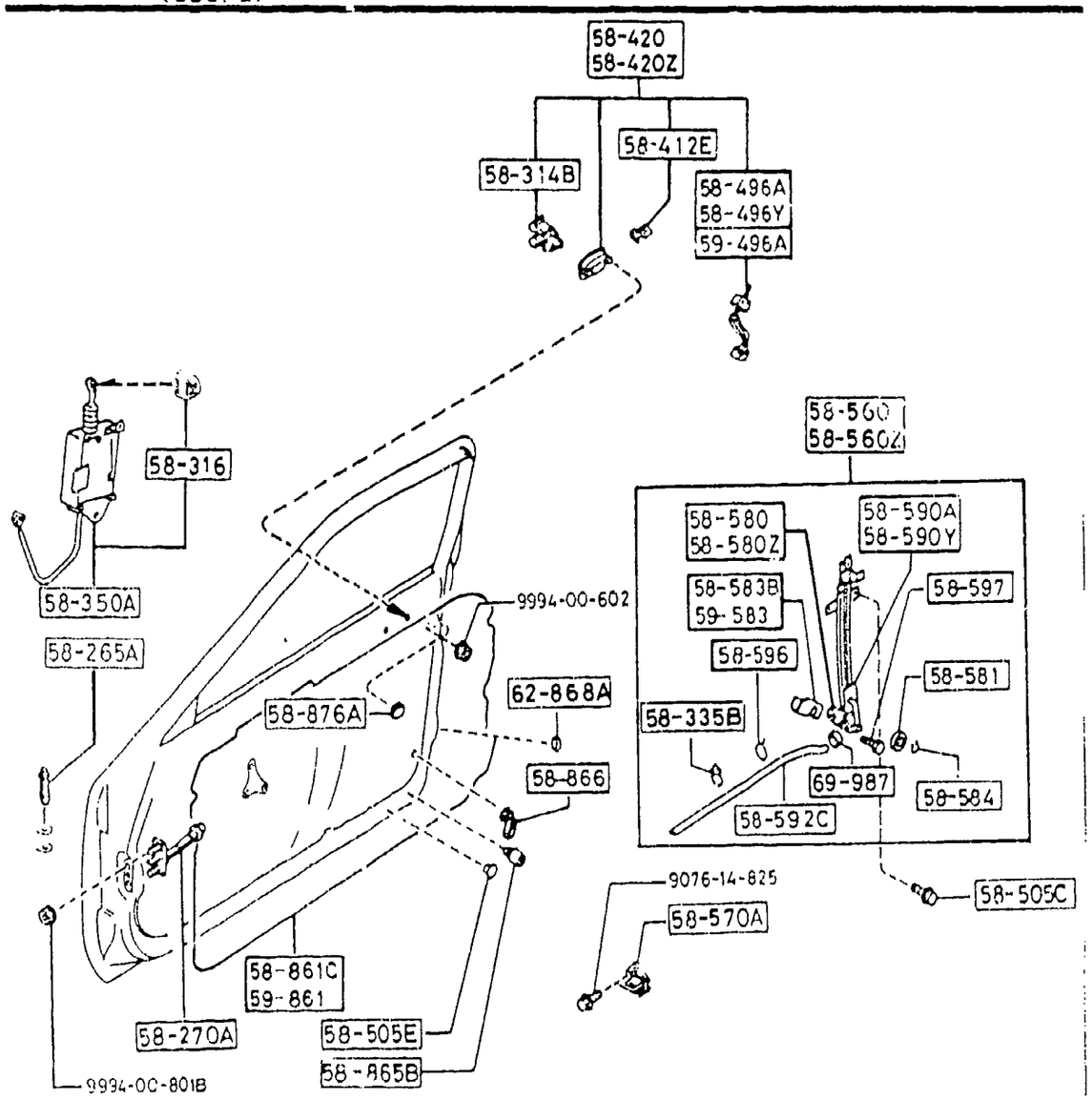


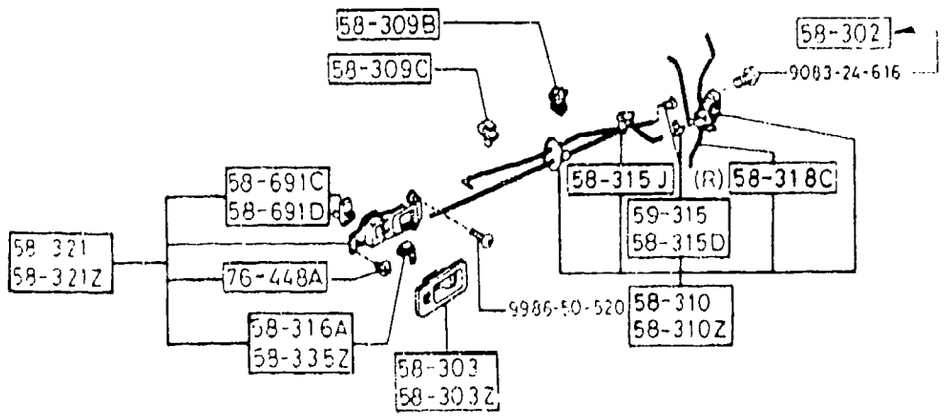




| PART NO. | QTY | MODEL/RESTRICTION | MODEL/RESTRICTION | MODEL/RESTRICTION | FROM-TO |
|---|---|---|---|---|---|
| 58-316 | | CLIP | | | |
| B093-58-351 | 1 | | | | -1520 |
| G212-58-351 | 1 | | | | 1520- |
| 58-316A | | CLIP | | | |
| B001-59-335 | 1 | | | | |
| 58-318C | | ROD(R),DOOR LOCK-POWER | | | |
| FB05-58-318 | 1 | | | | |
| 58-321 | | HANDLE(R),INNER | | | |
| FB02-58-330A | 1 | | | | |
| 02 | INT- | FD8 FE1 BLACK | | | |
| 48 | INT- | FD9 BLUE | | | |
| 58-321Z | | HANDLE(L),INNER | | | |
| FB02-59-330A | 1 | | | | |
| 02 | INT- | FD8 FE1 BLACK | | | |
| 48 | INT- | FD9 BLUE | | | |
| 58-335B | | CLIP | | | |
| B094-58-595 | 4 | | | | |
| 58-335Z | | CLIP(L),INNER HANDLE | | | |
| FB01-58-335 | 1 | | | | |
| 58-350A | | ACTUATOR(R),POWER LOCK | | | |
| FB06-58-350A AN(FB06-58-350B) | 1 | | | | -1520 |
| FB06-58-350B | 1 | | | | 1520- |
| 58-412E | | CLIP,HARNESS-OUT. HANDLE | | | |
| FB01-58-412 | 2 | (W/BURGLAR ALARM) | | | |
| 58-420 | | HANDLE(R),OUT. | | | |
| FB02-58-410B A (FB02-58-410C) | 1 | | | | -1501 |
| PZ | EXT- | PZ BRILLIANT BLACK | | | |
| SQ | EXT- | SQ BLAZE RED | | | |
| UC | EXT- | UC CRYSTAL WHITE | | | |

1501 FC3***-907346
1520 FC3***-907527

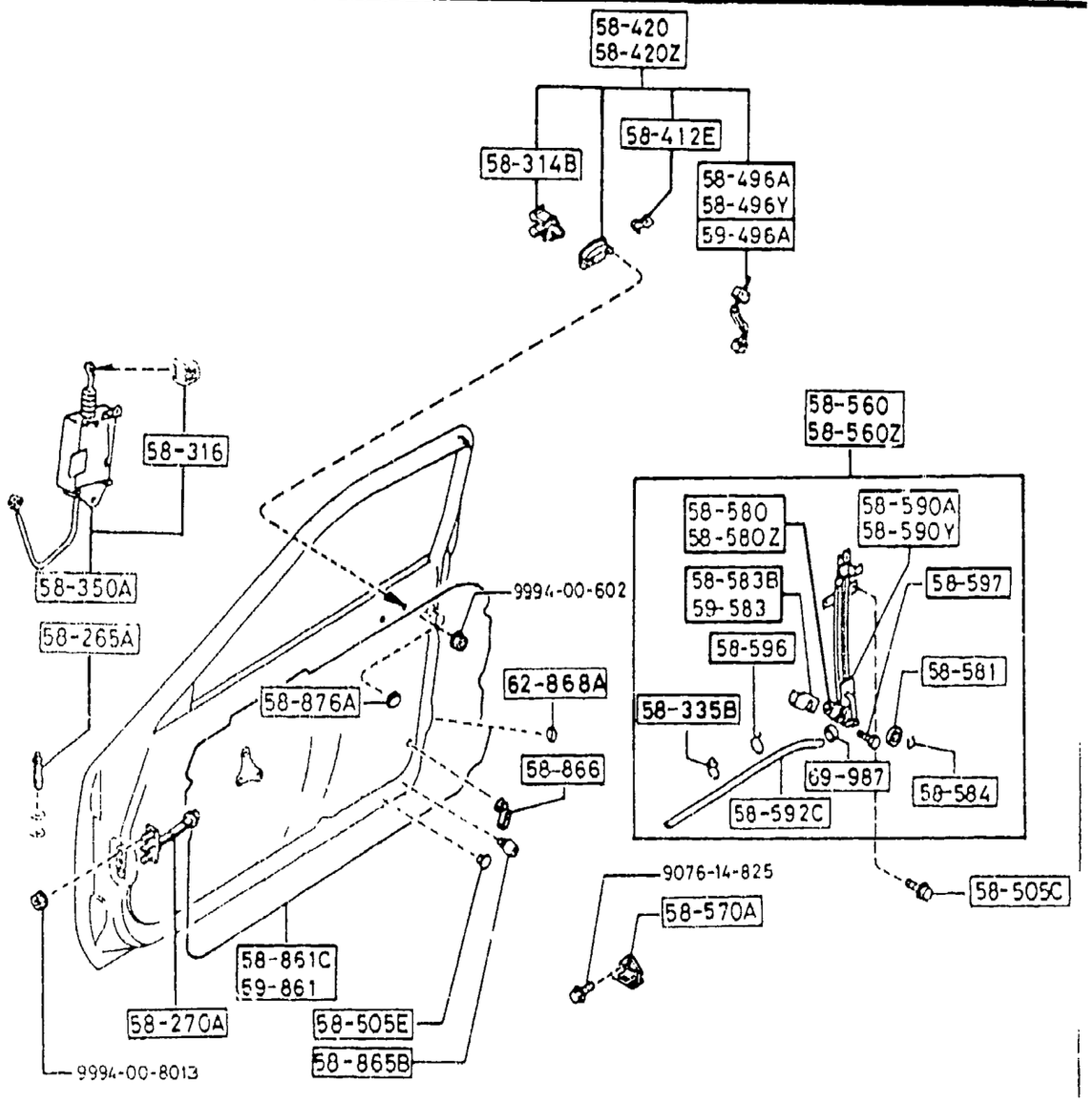


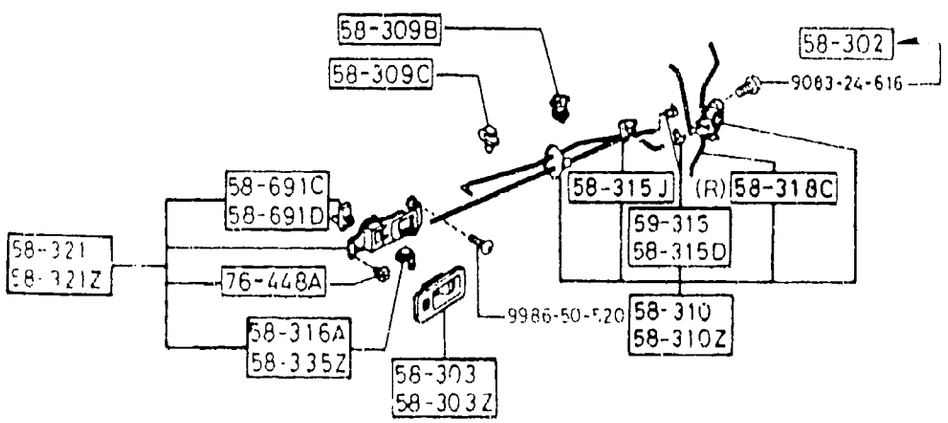






| PART NO. | QTY | MODEL/RESTRICTION | MODEL/RESTRICTION | MODEL/RESTRICTION | FROM-TO |
|---|---|---|---|---|---|
| CONT'D | | | | | |
| 5N EXT- | | 5N BRAVE BLUE MC | | | |
| FB02-58-410C | 1 | (W/BURGLAR ALARM) | | | 1501- |
| PZ EXT- | | PZ BRILLIANT BLACK | | | |
| SQ EXT- | | SQ BLAZE RED | | | |
| UC EXT- | | UC CRYSTAL WHITE | | | |
| 5N EXT- | | 5N BRAVE BLUE MC | | | |
| +----------+ \| 58-420Z \| +----------+ | | HANDLE(L),OUT. | | | |
| FB02-59-410B A (FB02-59-410C) | 1 | | | | -1501 |
| PZ EXT- | | PZ BRILLIANT BLACK | | | |
| SQ EXT- | | SQ BLAZE RED | | | |
| UC EXT- | | UC CRYSTAL WHITE | | | |
| 5N EXT- | | 5N BRAVE BLUE MC | | | |
| FB06-59-410C A (FB06-59-410D) | 1 | | | | -1501 |
| PZ EXT- | | PZ BRILLIANT BLACK | | | |
| SQ EXT- | | SQ BLAZE RED | | | |
| UC EXT- | | UC CRYSTAL WHITE | | | |
| 5N EXT- | | 5N BRAVE BLUE MC | | | |
| FB02-59-410C | 1 | BASE, (W/BURGLAR ALARM,W/O KEY ILLUMI) | | | 1501- |
| PZ EXT- | | PZ BRILLIANT BLACK | | | |
| SQ EXT- | | SQ BLAZE RED | | | |
| UC EXT- | | UC CRYSTAL WHITE | | | |
| 5N EXT- | | 5N BRAVE BLUE MC | | | |
| FB06-59-410D | 1 | BASE-OPT, TURBO, (W/BURGLAR ALARM,W/KEY ILLUMI.) | | | 1501- |
| PZ EXT- | | PZ BRILLIANT BLACK | | | |
| SQ EXT- | | SQ BLAZE RED | | | |
| UC EXT- | | UC CRYSTAL WHITE | | | |
| 5N EXT- | | 5N BRAVE BLUE MC | | | |
| +----------+ \| 58-496A \| +----------+ | | SWITCH(R),LOCK-CYLINDER | | | |
| FB03-58-496 | 1 | (W/BURGLAR ALARM) | | | |

1501 FC3***-907346

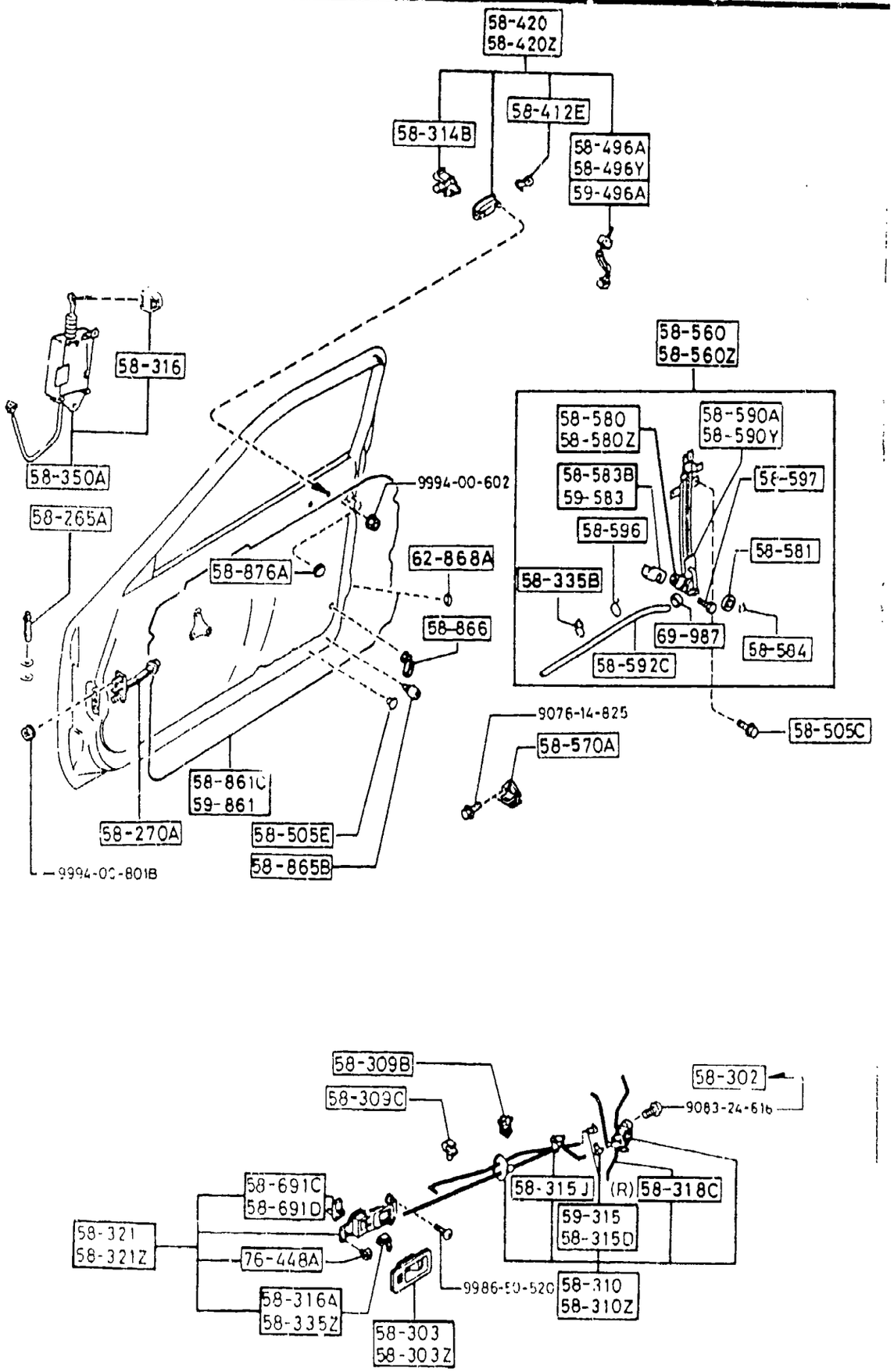


| PART NO. | QTY | MODEL/RESTRICTION | MODEL/RESTRICTION | MODEL/RESTRICTION | FROM-TO |
|---|---|---|---|---|---|
| 58-496Y<br>FD03-59-496 | 1 | SWITCH(L),LOCK-CYLINDER (W/BURGLAR ALARM) | | | |
| 58-505C<br>B092-58-505 | 4 | SCREW,WINDOW REGULATOR | | | |
| 58-505E<br>B092-58-355 | 1 | CAP | | | |
| 58-560<br>FB05-58-560J | 1 | REGULATOR(R),WINDOW | | | |
| 58-560Z<br>FB05-59-560J | 1 | REGULATOR(L),WINDOW | | | |
| 58-570A<br>B001-58-361A | 2 | STRIKER | | | |
| 58-580<br>FB05-58-58X | 1 | MOTOR(R),WINDOW | | | |
| 58-580Z<br>FB05-59-58X | 1 | MOTOR(L),WINDOW | | | |
| 58-581<br>FB05-58-581 | 2 | SPROCKET,REGULATOR GUIDE | | | |
| 58-583B<br>FB05-58-583A | 1 | HOLDER(R),MOTOR-REGULATOR | | | |
| 58-584<br>B094-58-584 | 2 | RING'C',SPROCKET-REG. | | | |
| 58-590A<br>FB05-58-590B | 1 | GUIDE(R),REG.-POWER WIND. | | | |
| 58-590Y<br>FB05-59-590B | 1 | GUIDE(L),REG.-POWER WIND. | | | |
| 58-592C<br>FB05-58-592B | 2 | TUBE,REGULATOR GUIDE | | | |

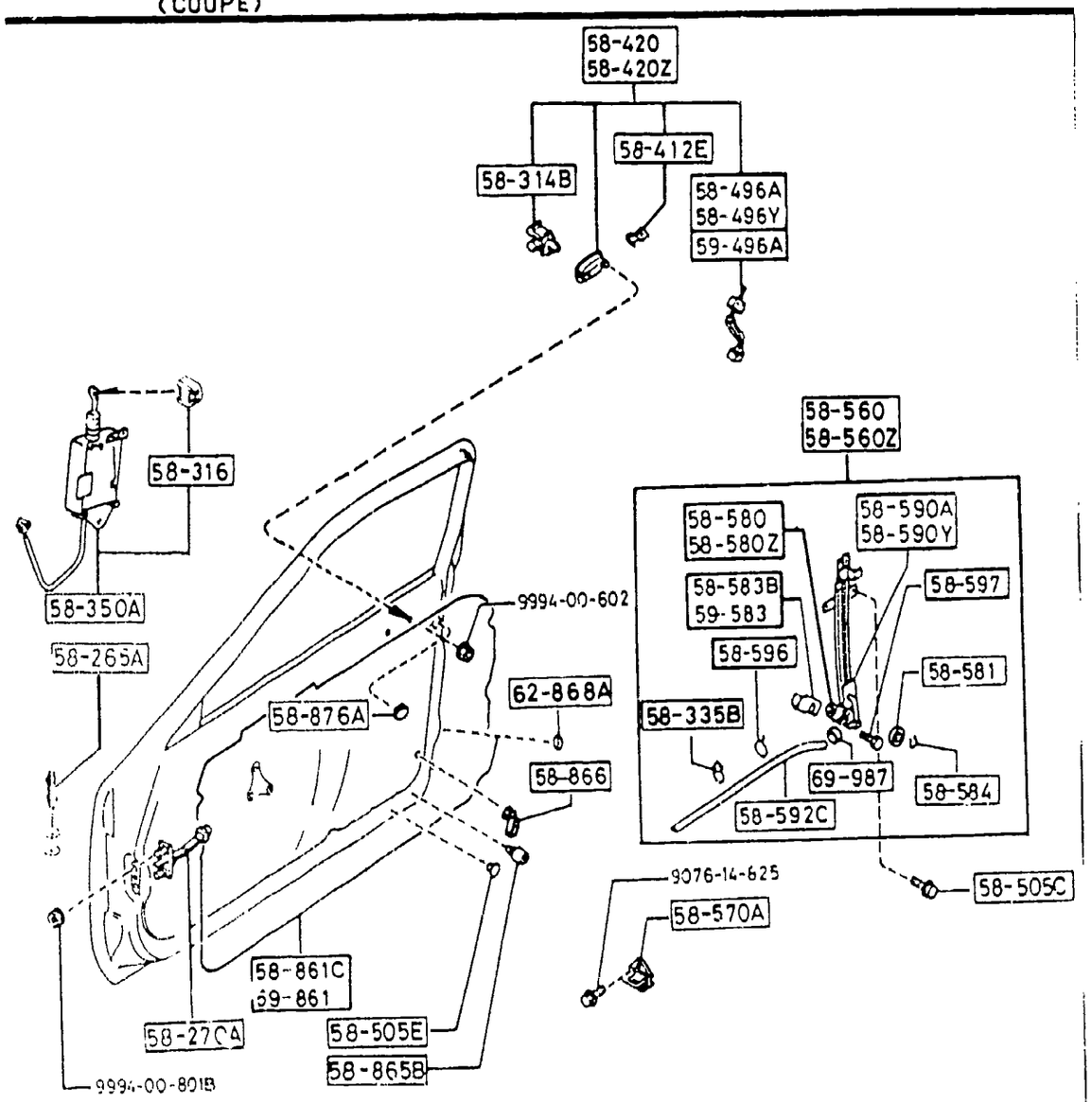


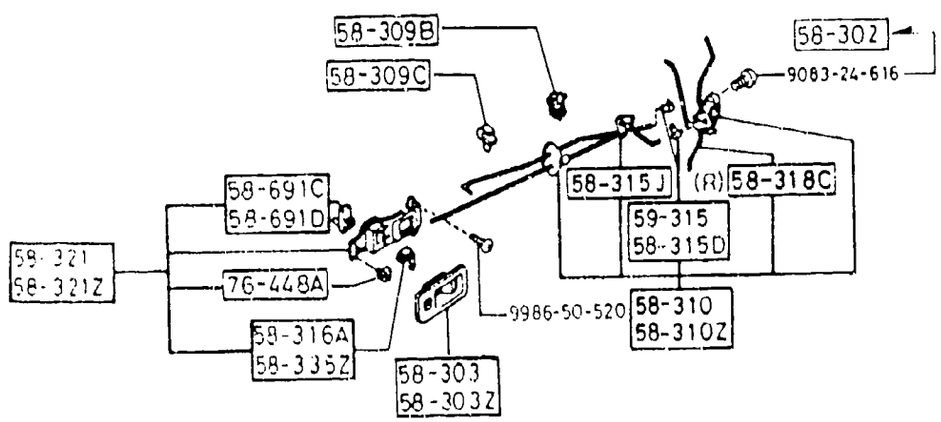




| PART NO. | QTY | MODEL/RESTRICTION | MODEL/RESTRICTION | MODEL/RESTRICTION | FROM-TO |
|---|---|---|---|---|---|
| 58-596 | | CLIP,TUBE-REGULATOR GUIDE | | | |
| FB05-58-596 | 4 | | | | |
| 58-597 | | BOLT,COVER-REG. GUIDE | | | |
| FB05-58-597 | 6 | | | | |
| 58-691C | | KNOB (R),DOOR LOCK | | | |
| FB02-58-316A | 1 | (W/BURGLAR ALARM) | | | |
| 02 | INT- | FD8 FE1 | | | |
| 48 | INT- | FD9 BLUE | | | |
| 58-691D | | KNOB(L),DOOR LOCK | | | |
| FB02-59-316A | 1 | (W/BURGLAR ALARM) | | | |
| 02 | INT- | FD8 FE1 BLACK | | | |
| 48 | INT- | FD9 BLUE | | | |
| 58-861C | | SCREEN(R),FRONT DOOR | | | |
| FC04-58-861 | 1 | | | | |
| 58-365B | | CUSHION,RUBBER | | | |
| G067-58-873 | 2 | | | | |
| 58-866 | | CLIP | | | |
| B038-58-866 | 2 | | | | |
| 58-876A | | COVER,DOOR BODY | | | |
| FB01-58-876 | 2 | | | | |
| 59-315 | | CLIP | | | |
| G030-59-315 | 4 | | | | |
| 59-496A | | HARNESS(L),ILLUMI.&SWITCH | | | |
| FB06-59-496 | 1 | BASE-OPT, TURBO, (W/BURGLAR ALARM,W/KEY ILLUMI.) | | | |
| 59-583 | | HOLDER(L),MOTOR-REGULATOR | | | |
| FB05-59-583A | 1 | | | | |
| 59-861 | | SCREEN(L),FRONT DOOR | | | |
| FC04-59-861 | 1 | | | | |

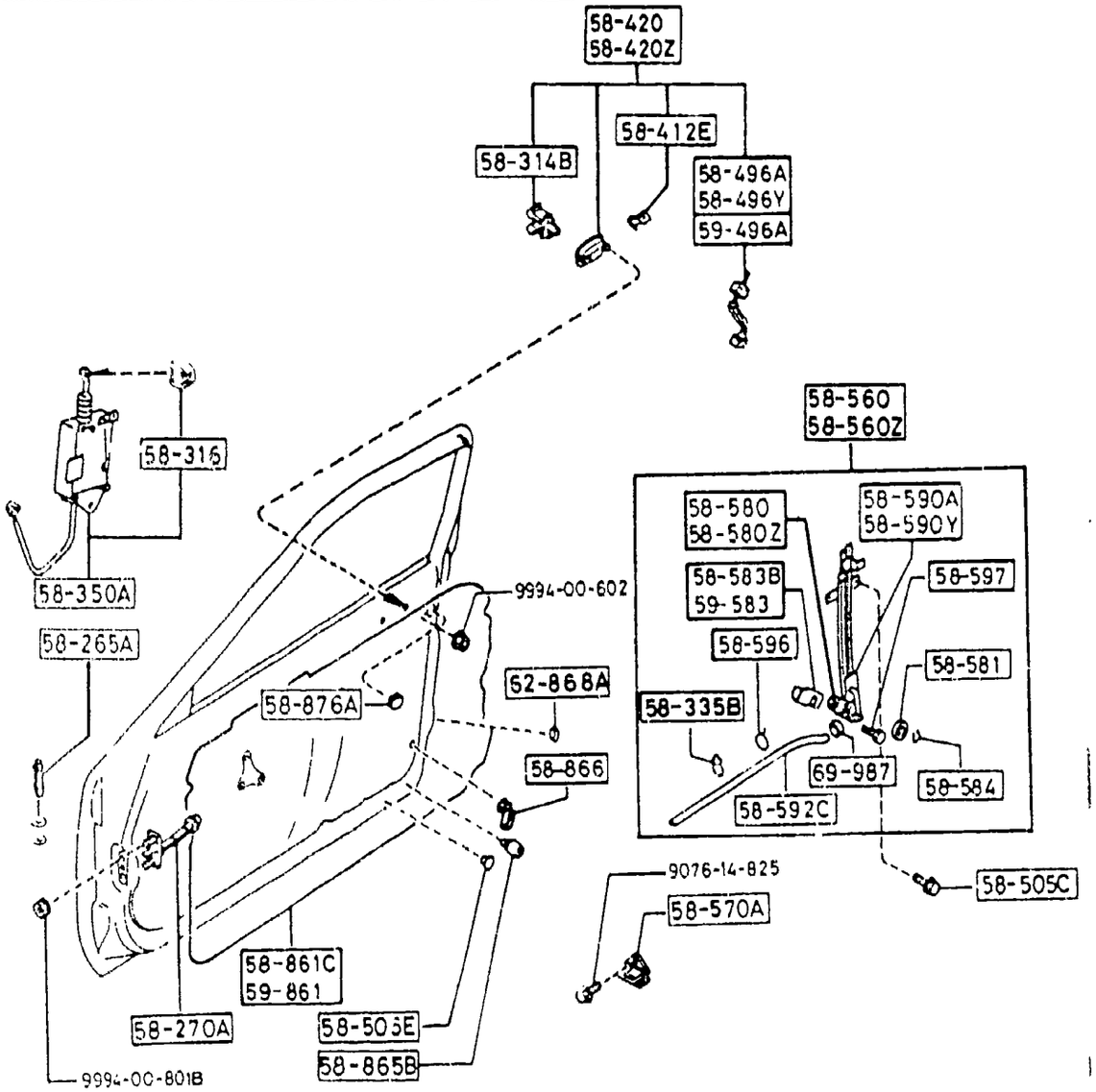


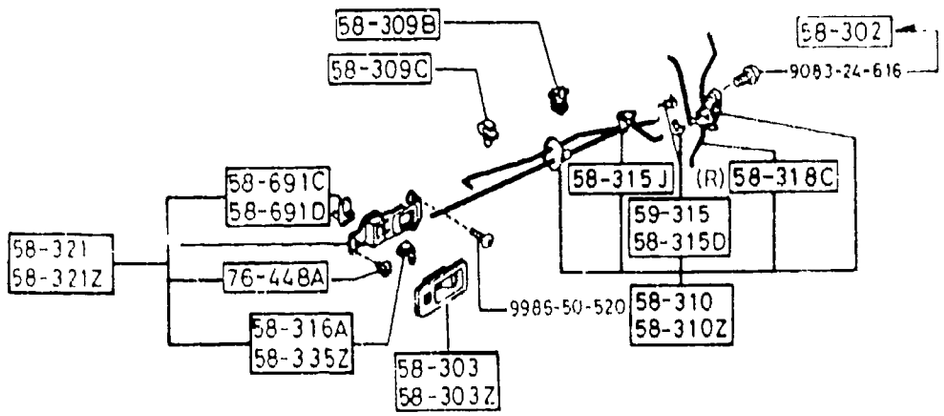


5830 -6 * FRONT DOOR MECHANISMS
(COUPE)

| PART NO. | QTY | MODEL/RESTRICTION | MODEL/RESTRICTION | MODEL/RESTRICTION | FROM-TO |
|---|---|---|---|---|---|
| 62-868A | | COVER,HOLE-LIFT GATE | | | |
| B499-62-868 | 2 | | | | |
| 69-987 | | BAND | | | |
| B094-58-593 | 2 | | | | |
| 76-448A | | CLIP | | | |
| G030-76-448 | 2 | | | | |

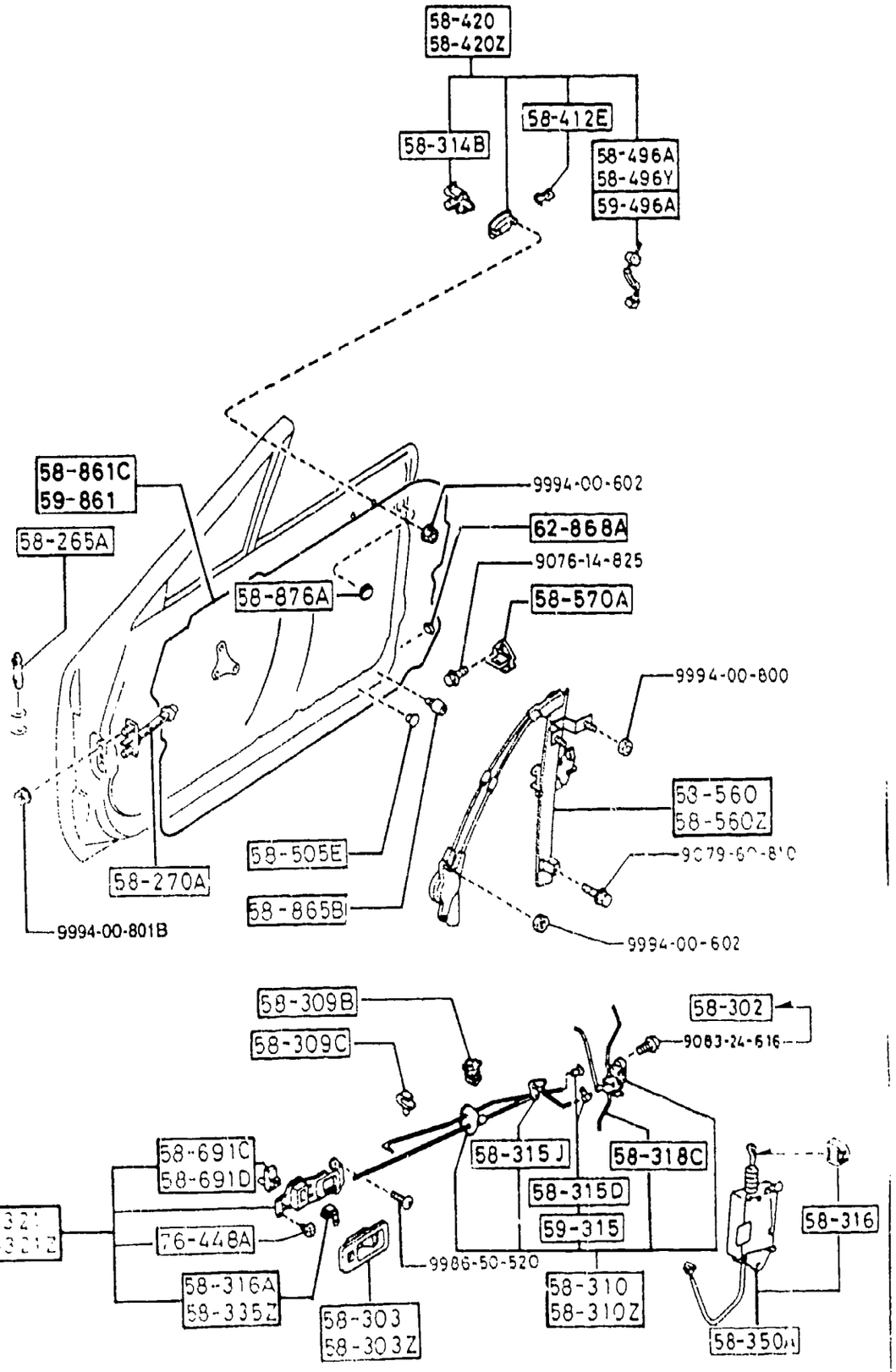




| PART NO. | QTY | MODEL/RESTRICTION | MODEL/RESTRICTION | MODEL/RESTRICTION | FROM-TO |
|---|---|---|---|---|---|
| 58-265A | | PIN,CHECKER | | | |
| H260-58-265C | 2 | | | | |
| 58-270A | | CHECKER,DOOR | | | |
| FB01-58-270B | 2 | | | | |
| 58-302 | | SCREW,TAPPING-DOOR LOCK | | | |
| HG30-58-302A | 6 | | | | 1601- |
| 58-303 | | COVER(R),IN.HANDLE | | | |
| FB01-58-303B | 1 | | | | |
| 02 | INT- | FD8 FE1 BLACK | | | |
| 48 | INT- | FD9 BLUE | | | |
| 58-303Z | | COVER(L),IN.HANDLE | | | |
| FB01-59-303B | 1 | | | | |
| 02 | INT- | FD8 FE1 BLACK | | | |
| 48 | INT- | FD9 BLUE | | | |
| 58-309B | | HOLDER(UP.),ROD-IN.HANDLE | | | |
| FB02-58-309 | 2 | | | | |
| 58-309C | | HOLDER(LOW),ROD-IN.HANDLE | | | |
| FB01-58-309A | 2 | | | | |
| 58-310 | | LOCK(R),DOOR | | | |
| FB05-58-310A | 1 | | | | |
| 58-310Z | | LOCK(L),DOOR | | | |
| FB05-59-310A | 1 | | | | |
| 58-314B | | JOINT | | | |
| H043-72-411 | 2 | | | | |
| 58-315D | | CLIP (R) | | | |
| G030-58-315 | 5 | | | | |
| 58-315J | | CLIP | | | |
| H001-58-315 | 2 | | | | |

1601 FC3***-907848

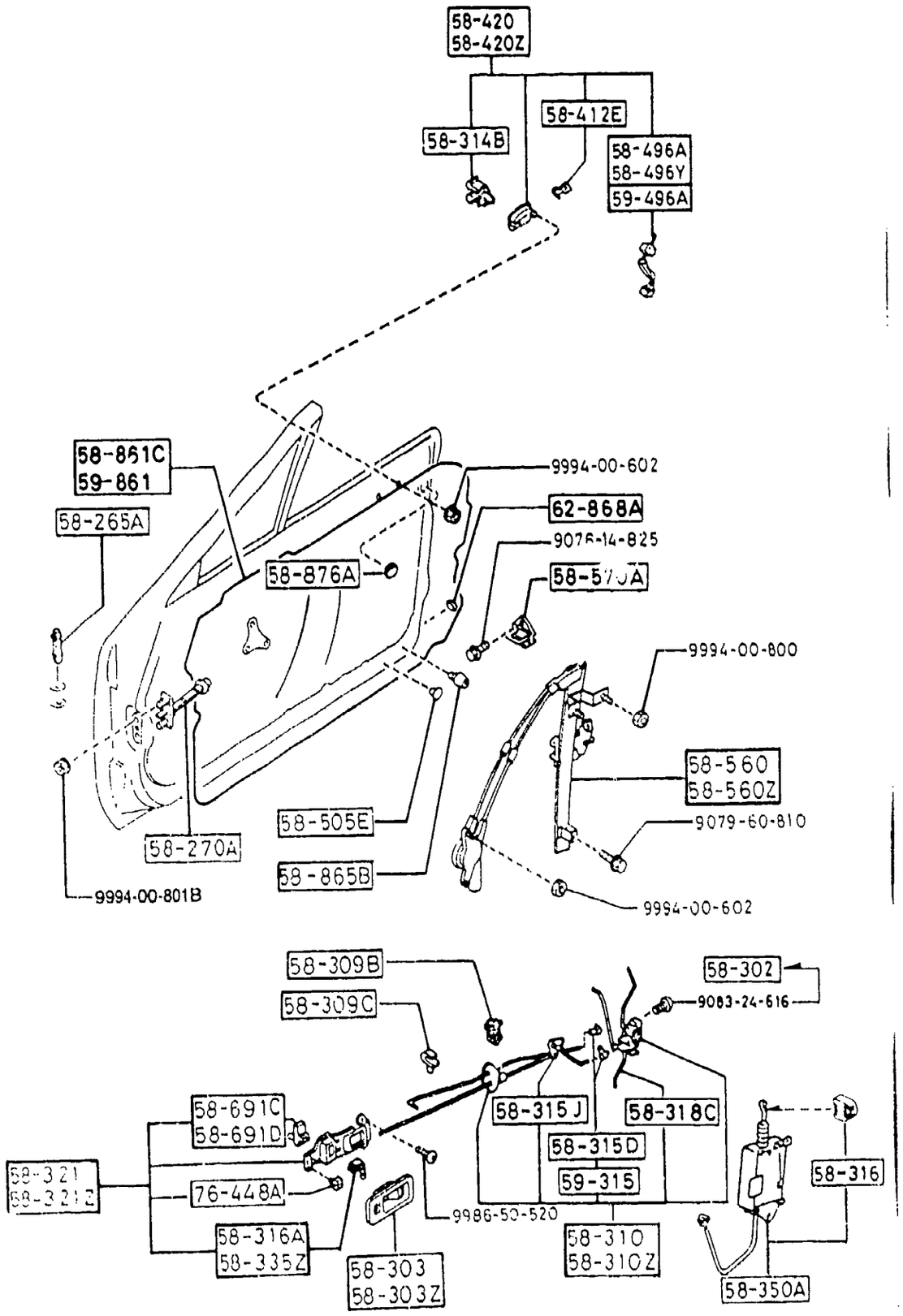




| PART NO. | QTY | MODEL/RESTRICTION | MODEL/RESTRICTION | MODEL/RESTRICTION | FROM-TO |
|---|---|---|---|---|---|
| 58-316 | | CLIP | | | |
| B093-58-351 | 1 | | | | -1520 |
| G212-58-351 | 1 | | | | 1520- |
| 58-316A | | CLIP | | | |
| B001-59-335 | 1 | | | | |
| 58-318C | | ROD(R),DOOR LOCK-POWER | | | |
| FB05-58-318 | 1 | | | | |
| 58-321 | | HANDLE(R),INNER | | | |
| FB02-58-330A | 1 | | | | |
| 02 | INT- | FD8 FE1 BLACK | | | |
| 48 | INT- | FD9 BLUE | | | |
| 58-321Z | | HANDLE(L),INNER | | | |
| FB02-59-330A | 1 | | | | |
| 02 | INT- | FD8 FE1 BLACK | | | |
| 48 | INT- | FD9 BLUE | | | |
| 58-335Z | | CLIP(L),INNER HANDLE | | | |
| FB01-58-335 | 1 | | | | |
| 58-350A | | ACTUATOR(R),POWER LOCK | | | |
| FB06-58-350A AN(FB06-58-350B) | 1 | | | | -1520 |
| FB06-58-350B | 1 | | | | 1520- |
| 58-412E | | CLIP,HARNESS-OUT. HANDLE | | | |
| FB01-58-412 | 2 | | | | |
| 58-420 | | HANDLE(R),OUT. | | | |
| FB02-58-410B A (FB02-58-410C) | 1 | | | | -1501 |
| PZ | EXT- | PZ BRILLIANT BLACK | | | |
| SQ | EXT- | SQ BLAZE RED | | | |
| UC | EXT- | UC CRYSTAL WHITE | | | |
| 5N | EXT- | 5N BRAVE BLUE MC | | | |
| FB02-58-410C | 1 | | | | 1501- |

1501 FC3***-907346
1520 FC3***-907527

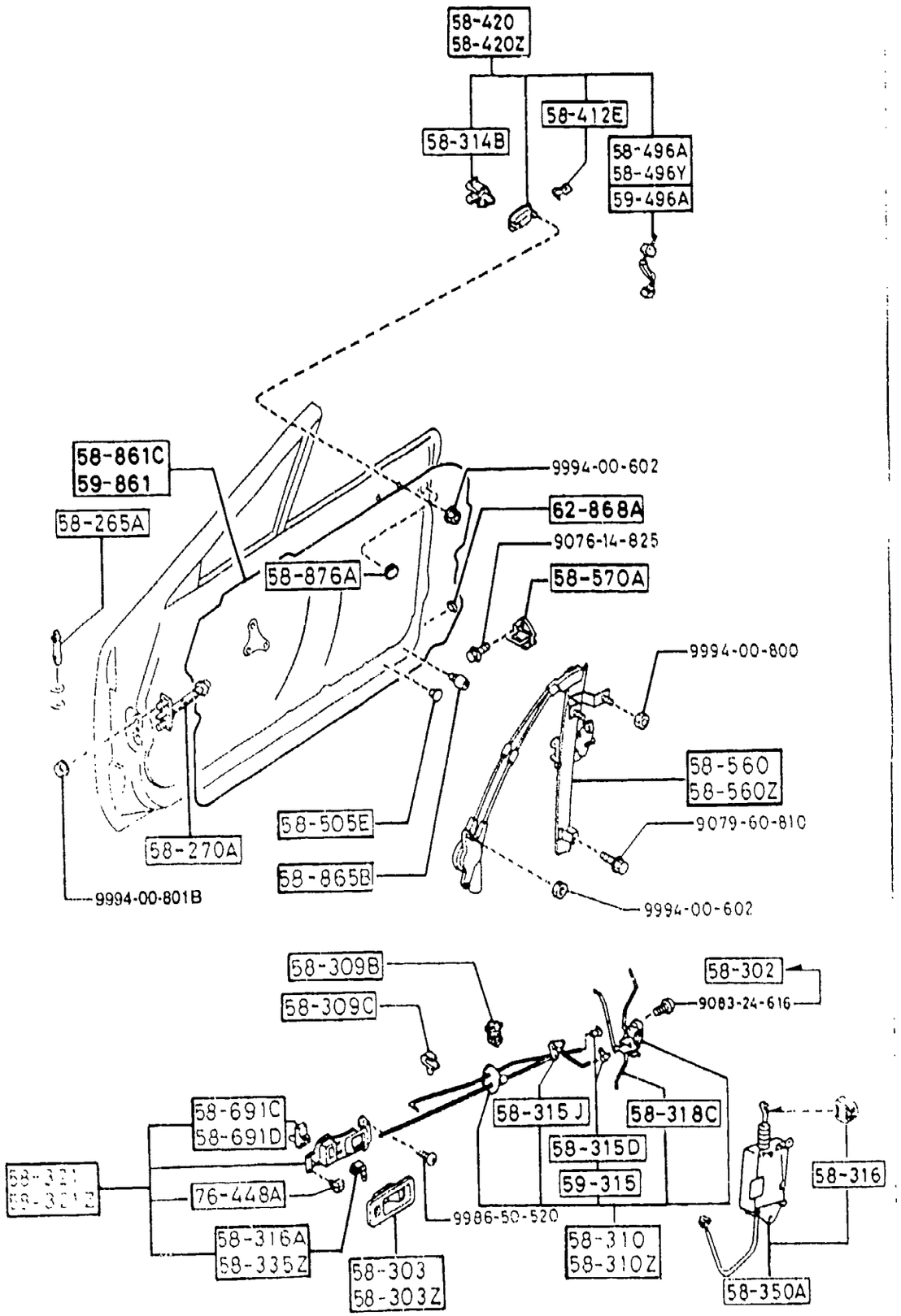




| PART NO. | QTY | MODEL/RESTRICTION | MODEL/RESTRICTION | MODEL/RESIRICTION | FROM-TO |
|---|---|---|---|---|---|
| CONT'D | | | | | |
| PZ | EXT- | PZ BRILLIANT BLACK | | | |
| SQ | EXT- | SQ BLAZE RED | | | |
| UC | EXT- | UC CRYSTAL WHITE | | | |
| 5N | EXT- | 5N BRAVE BLUE MC | | | |
| +---------+ \| 58-420Z \| +---------+ | | HANDLE(L),OUT. | | | |
| FB06-59-410C A (FB06-59-410D) | 1 | | | | -1501 |
| PZ | EXT- | PZ BRILLIANT BLACK | | | |
| SQ | EXT- | SQ BLAZE RED | | | |
| UC | EXT- | UC CRYSTAL WHITE | | | |
| 5N | EXT- | 5N BRAVE BLUE MC | | | |
| FB06-59-410D | 1 | | | | 1501- |
| PZ | EXT- | PZ BRILLIANT BLACK | | | |
| SQ | EXT- | SQ BLAZE RED | | | |
| UC | EXT- | UC CRYSTAL WHITE | | | |
| 5N | EXT- | 5N BRAVE BLUE MC | | | |
| +---------+ \| 58-496A \| +---------+ | | SWITCH(R),LOCK-CYLINDER | | | |
| FB03-58-496 | 1 | | | | |
| +---------+ \| 58-496Y \| +---------+ | | SWITCH(L),LOCK-CYLINDER | | | |
| FB03-59-496 | 1 | | | | |
| +---------+ \| 58-505E \| +---------+ | | CAP | | | |
| B092-58-355 | 1 | | | | |
| +---------+ \| 58-560 \| +---------+ | | REGULATOR(R),WINDOW | | | |
| FB67-58-560E | 1 | | | | |
| +---------+ \| 58-560Z \| +---------+ | | REGULATOR(L),WINDOW | | | |
| FB67-59-560E | 1 | | | | |
| +---------+ \| 58-570A \| +---------+ | | STRIKER | | | |
| B001-58-361A | 2 | | | | |
| +---------+ \| 58-691C \| +---------+ | | KNOB (R),DOOR LOCK | | | |
| FB02-58-316A | 1 | | | | |
| 02 | INT- | FD8 FEl | | | |

1501 FC3***-907346

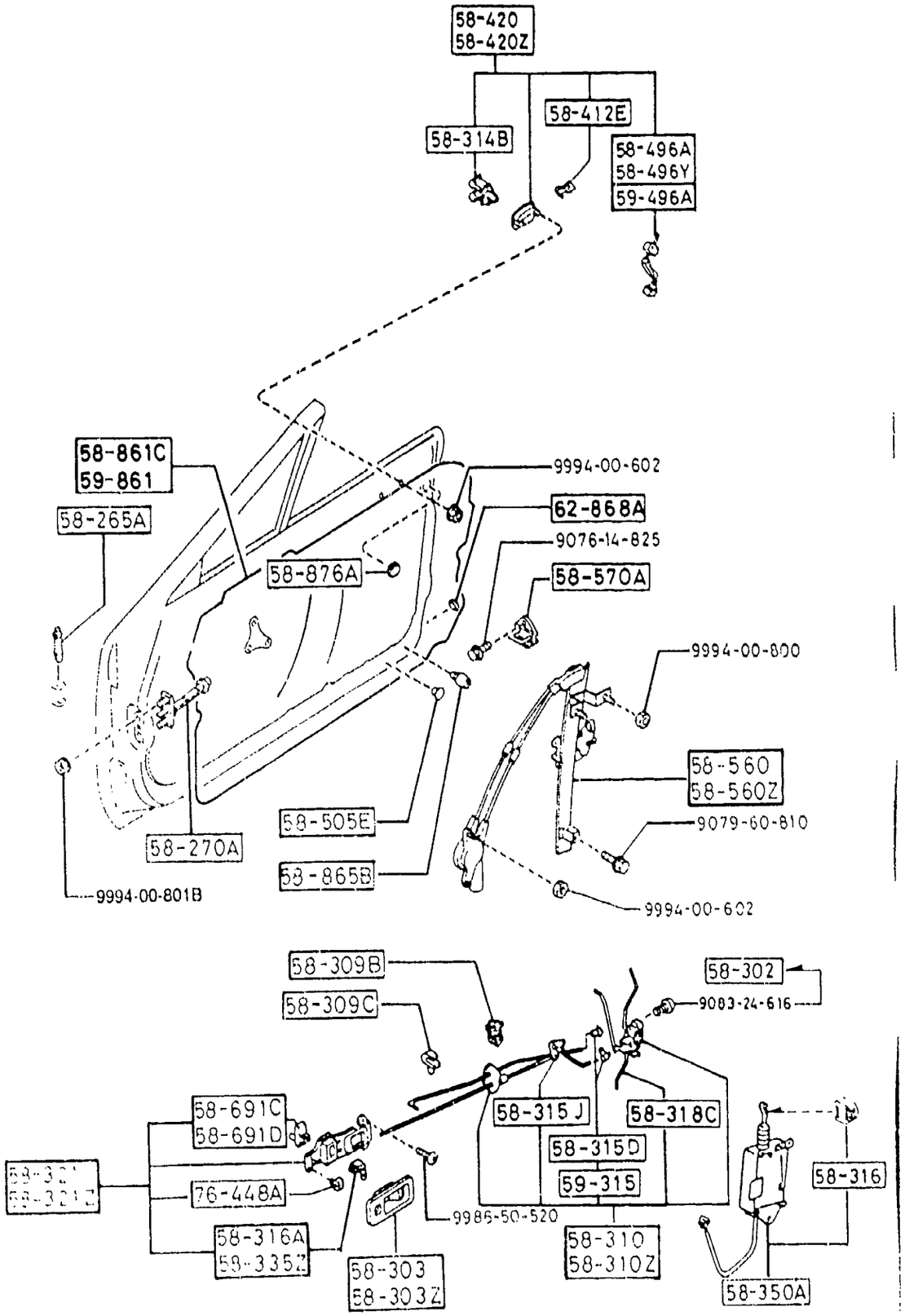


5830A -4 * FRONT DOOR MECHANISMS
(CONVERTIBLE)

| PART NO. | QTY | MODEL/RESTRICTION | MODEL/RESTRICTION | MODEL/RESTRICTION | FROM-TO |
|---|---|---|---|---|---|
| CONT'D | | | | | |
| 48 | INT- | FD9 BLUE | | | |
| 58-691D | | KNOB(L),DOOR LOCK | | | |
| FB02-59-316A | 1 | | | | |
| 02 | INT- | FD8 FE1 BLACK | | | |
| 48 | INT- | FD9 BLUE | | | |
| 58-861C | | SCREEN(R),FRONT DOOR | | | |
| FB70-58-861 | 1 | | | | |
| 58-865B | | CUSHION,RUBBER | | | |
| G067-58-873 | 2 | | | | |
| 58-876A | | COVER,DOOR BODY | | | |
| FB01-58-876 | 2 | | | | |
| 59-315 | | CLIP | | | |
| G030-59-315 | 4 | | | | |
| 59-496A | | HARNESS(L),ILLUMI.&SWITCH | | | |
| FB06-59-496 | 1 | | | | |
| 59-861 | | SCREEN(L),FRONT DOOR | | | |
| FB70-59-861 | 1 | | | | |
| 62-868A | | COVER,HOLE-LIFT GATE | | | |
| B499-62-868 | 2 | | | | |
| 76-448A | | CLIP | | | |
| G030-76-448 | 2 | | | | |

(CLOTH"A")
(CLOTH"B")

(THIS ILLUSTRATION CONSISTS OF 2 PAGES)

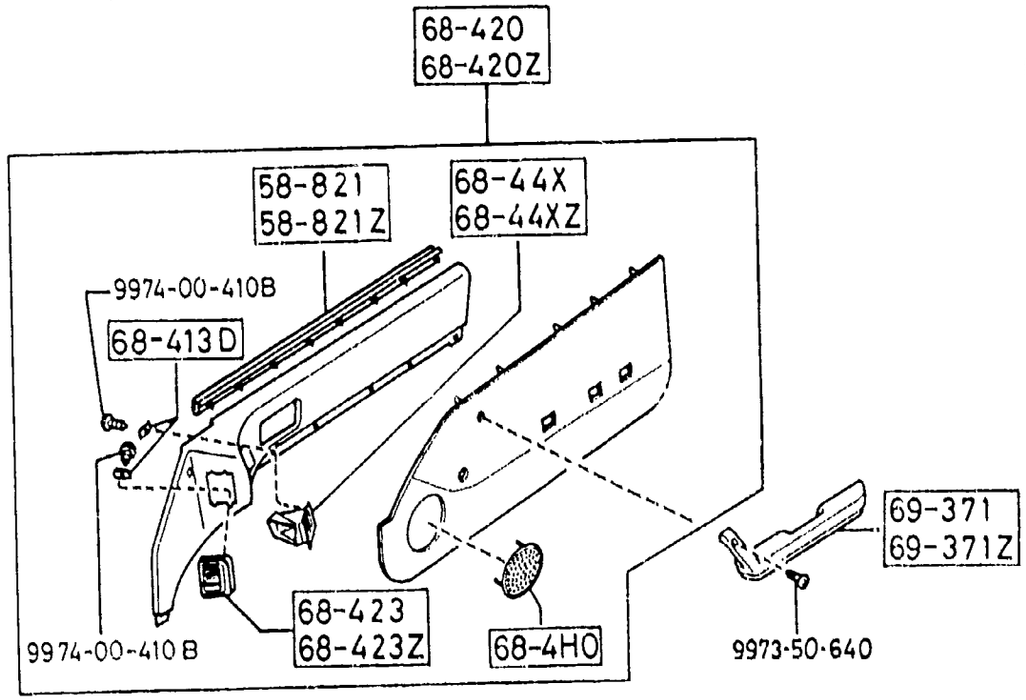


(CLOTH"A")
(CLOTH"B")

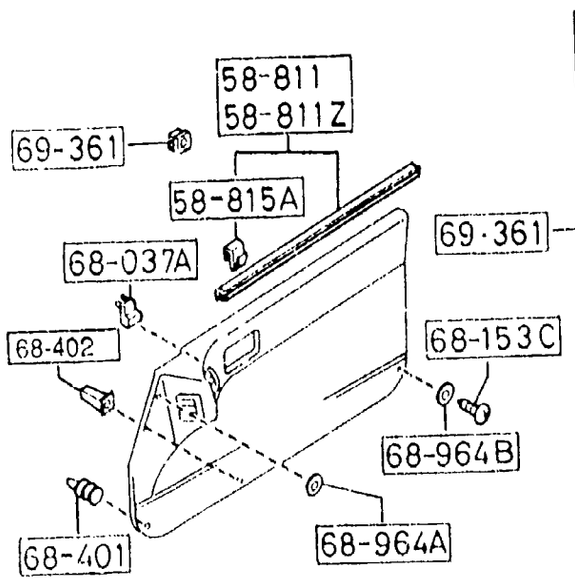




(CLOTH"D")
(LEATHER)

(THIS ILLUSTRATION CONSISTS OF 2 PAGES)

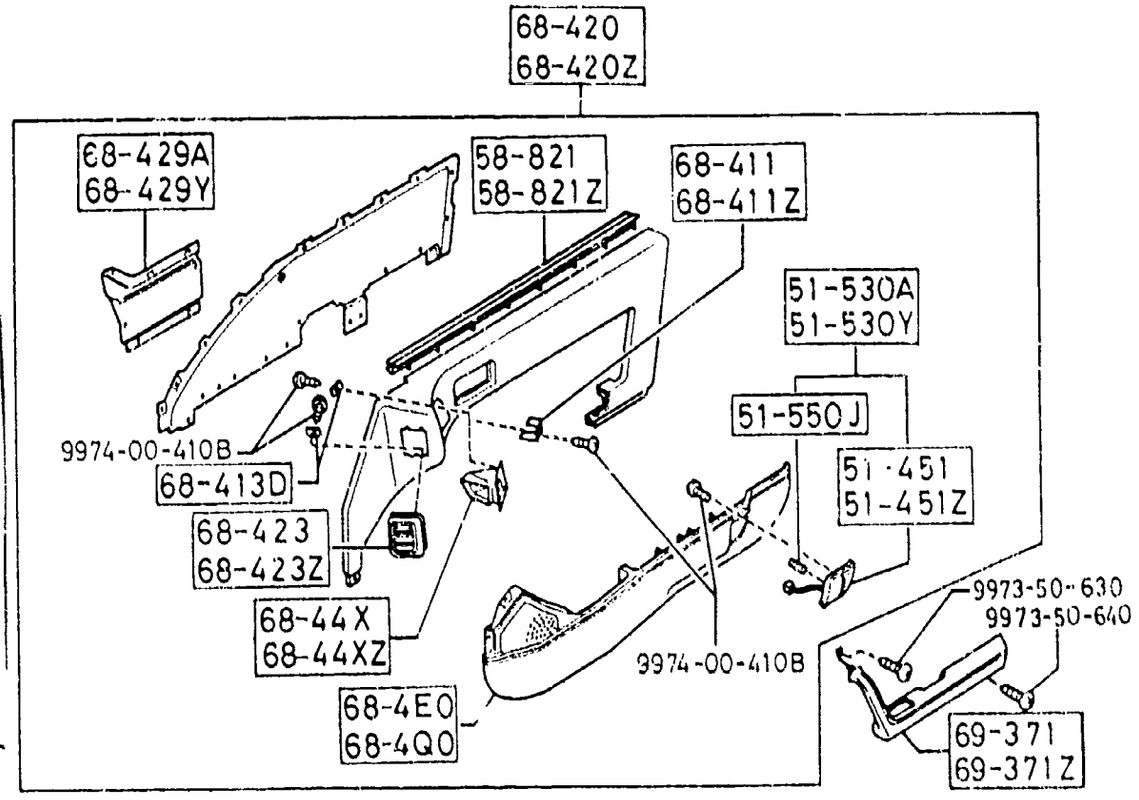


(CLOTH"D")
(LEATHER)

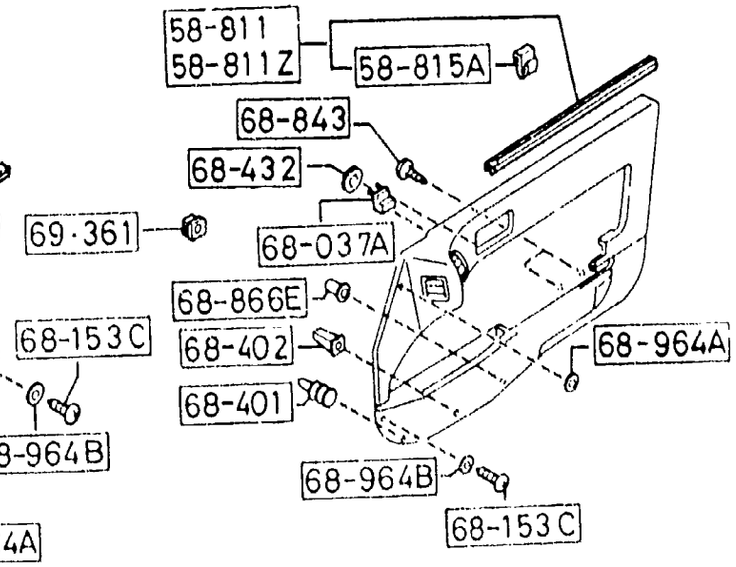


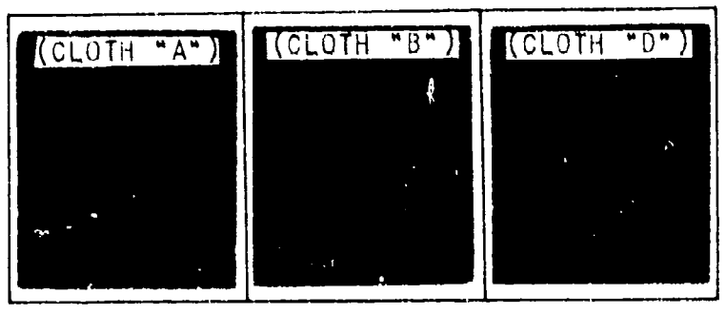

(CLOTH"A")
(CLOTH"B")

(THIS ILLUSTRATION CONSISTS OF 2 PAGES)

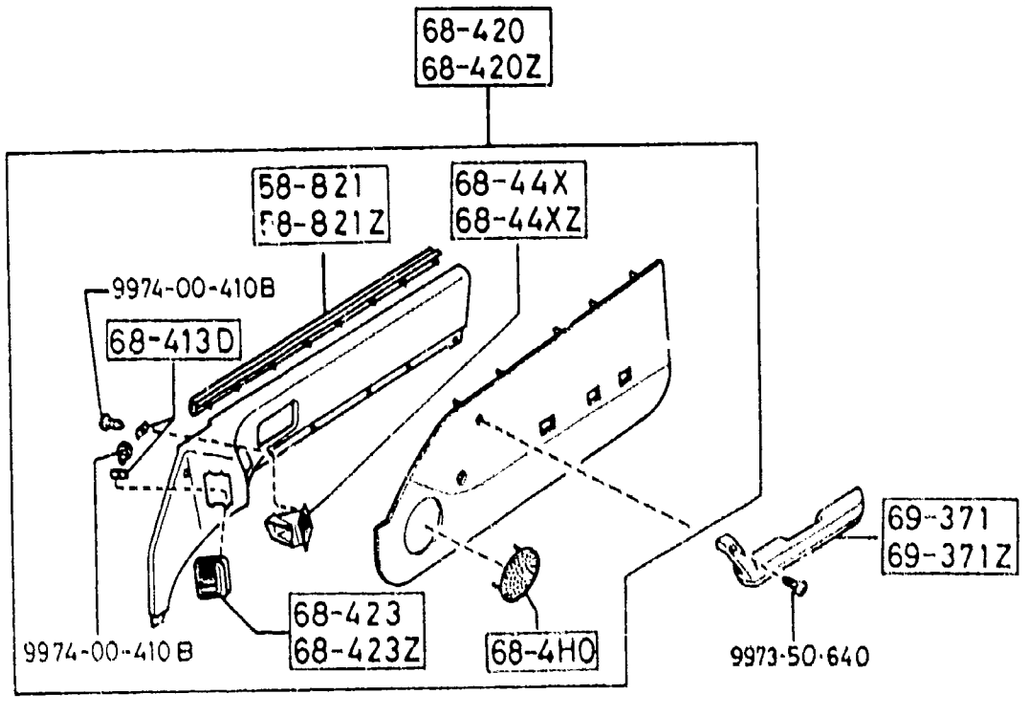


(CLOTH"A")
(CLOTH"B")

(CLOTH"D")
(LEATHER)

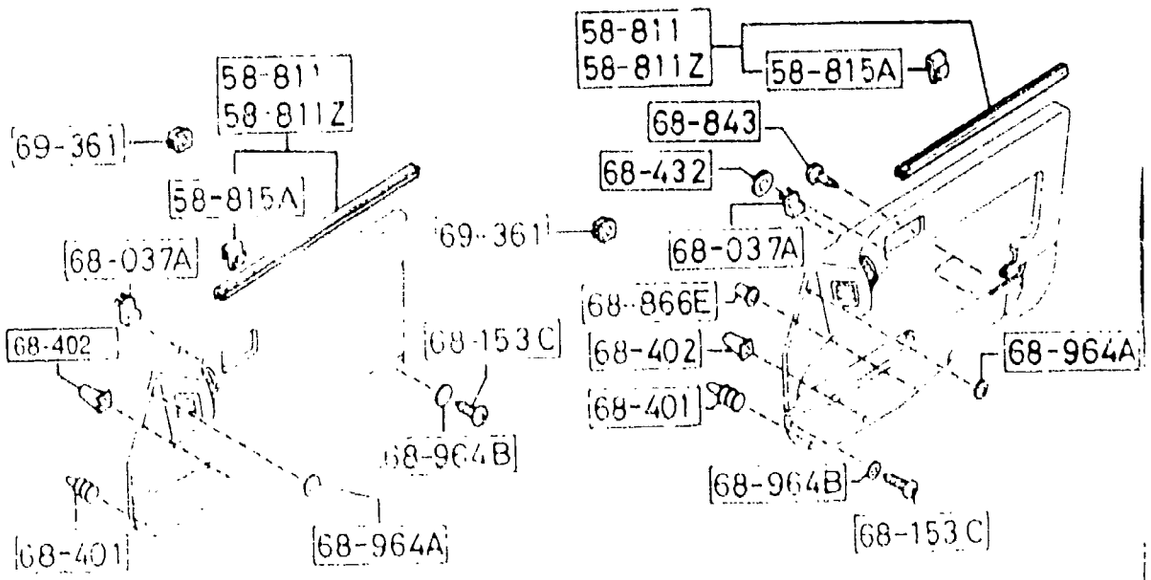






| PART NO. | QTY | MODEL/RESTRICTION | MODEL/RESTRICTION | MODEL/RESTRICTION | FROM-TO |
|---|---|---|---|---|---|
| 51-451 | | LENS(R),COURTESY LAMP | | | |
| FB05-51-531 | 1 | | | | |
| 51-451Z | | LENS(L),COURTESY LAMP | | | |
| FB05-51-591 | 1 | | | | |
| 51-530A | | LAMP(R),COURTESY-DR TRIM | | | |
| FB05-51-530 | 1 | | | | |
| 51-530Y | | LAMP(L),COURTESY-DR TRIM | | | |
| FB05-51-590 | 1 | | | | |
| 51-550J | | BULB | | | |
| 99701-6040 | 2 | 12V 3.8W | | | |
| 58-811 | | WEATHERSTRIP(R),OUT. | | | |
| FB01-58-810 | 1 | | | | |
| 58-811Z | | WEATHERSTRIP(L),OUT. | | | |
| FB01-59-810 | 1 | | | | |
| 58-815A | | CLIP,WEATHERSTRIP-OUTER | | | |
| FB01-58-815 | 12 | | | | |
| 58-821 | | WEATHERSTRIP(R),INN. | | | |
| FB01-58-821 | 1 | | | | |
| 58-821Z | | WEATHERSTRIP(L),INN. | | | |
| FB01-59-821 | 1 | | | | |
| 68-037A | | GROMMET,SCREW | | | |
| FB01-68-403 | 2 | | | | |
| 68-153C | | SCREW,TAPPING | | | |
| FB01-68-425 | 2 | | | | |
| 02 | INT- | FD8 FE1 BLACK | | | |
| 48 | INT- | FD9 BLUE | | | |
| 68-4E0 | | PLATE(R),KICK-D.TRIM | | | |
| FC04-68-4E0B | 1 | | | | |

(CLOTH"D")
(LEATHER)

(THIS ILLUSTRATION CONSISTS OF 2 PAGES)

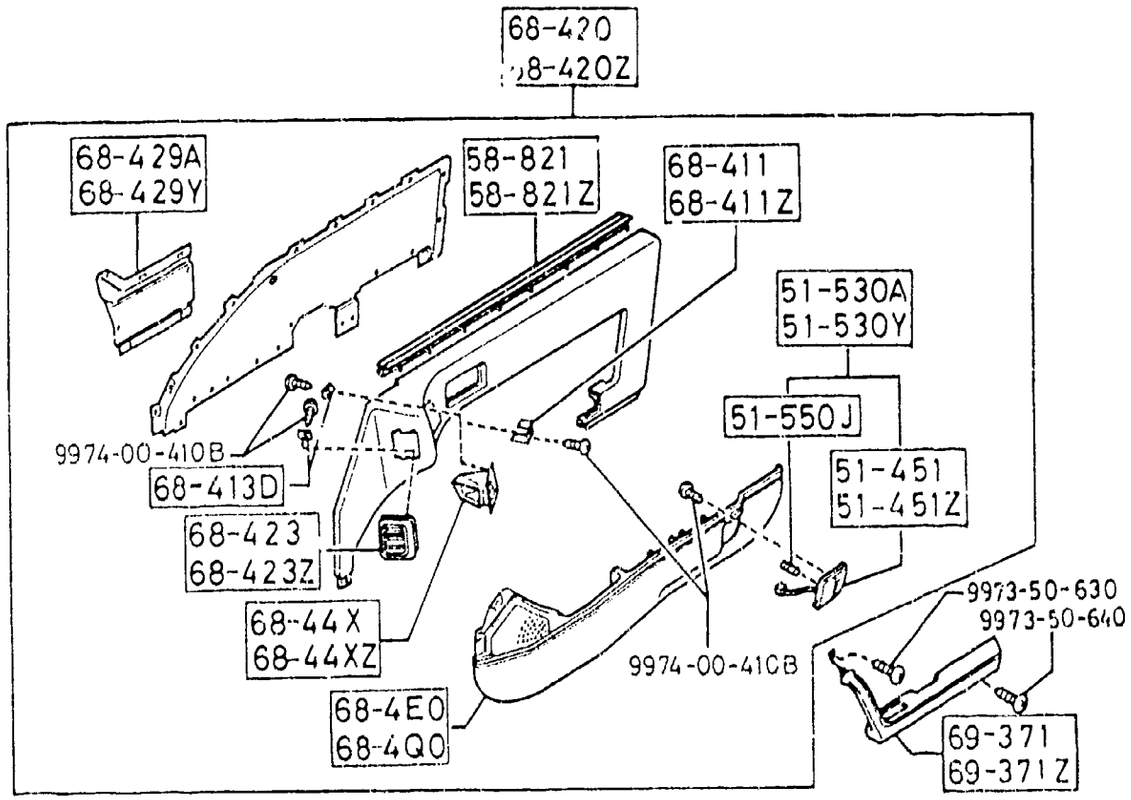


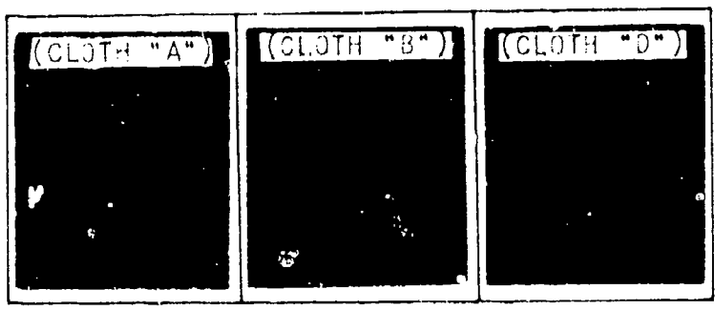






| PART NO. | QTY | MODEL/RESTRICTION | MODEL/RESTRICTION | MODEL/RESTRICTION | FROM-TO |
|---|---|---|---|---|---|
| CONT'D | | | | | |
| 02 | INT- | FD8 BLACK | | | |
| 48 | INT- | FD9 BLUE | | | |
| 68-4H0 | | GRILLE,SPEAKER-FRT | | | |
| FC01-68-4H0A | 2 | | | | |
| 02 | INT- | FD8 BLACK | | | |
| 48 | INT- | FD9 BLUE | | | |
| 68-4Q0 | | PLATE(L),KICK-D.TRIM | | | |
| FC04-68-4Q0B | 1 | | | | |
| 02 | INT- | FD8 BLACK | | | |
| 48 | INT- | FD9 BLUE | | | |
| 68-401 | | FASTENER,DOOR TRIM | | | |
| B100-68-401 | 16 | TURBO, BASE-OPT-2, TURBO-OPT, (CLOTH 'D') (LEATHER) | | | |
| B100-68-401 | 18 | BASE-OPT-1, BASE, (CLOTH 'B') (CLOTH 'A') | | | |
| 68-402 | | GROMMET,SCREW | | | |
| FA34-68-402 | 8 | | | | |
| 68-411 | | BRKT NO.1(R),GRILLE-TRIM | | | |
| FB01-68-414 | 1 | TURBO, BASE-OPT-2, TURBO-OPT, (CLOTH 'D') (LEATHER) | | | |
| 68-411Z | | BRKT NO.1(L),GRILLE-TRIM | | | |
| FB01-68-415 | 1 | TURBO, BASE-OPT-2, TURBO-OPT, (CLOTH 'D') (LEATHER) | | | |
| 68-413D | | WASHER | | | |
| FB01-68-413 | 10 | | | | |
| 68-420 | | TRIM(R),DOOR | | | |
| FC04-68-420B | 1 | BASE-OPT-1, (CLOTH 'B') ((W/RR WIPER)>(W/O TURBO) ) | | | |

(CLOTH"A")
(CLOTH"B")

(THIS ILLUSTRATION CONSISTS OF 2 PAGES)

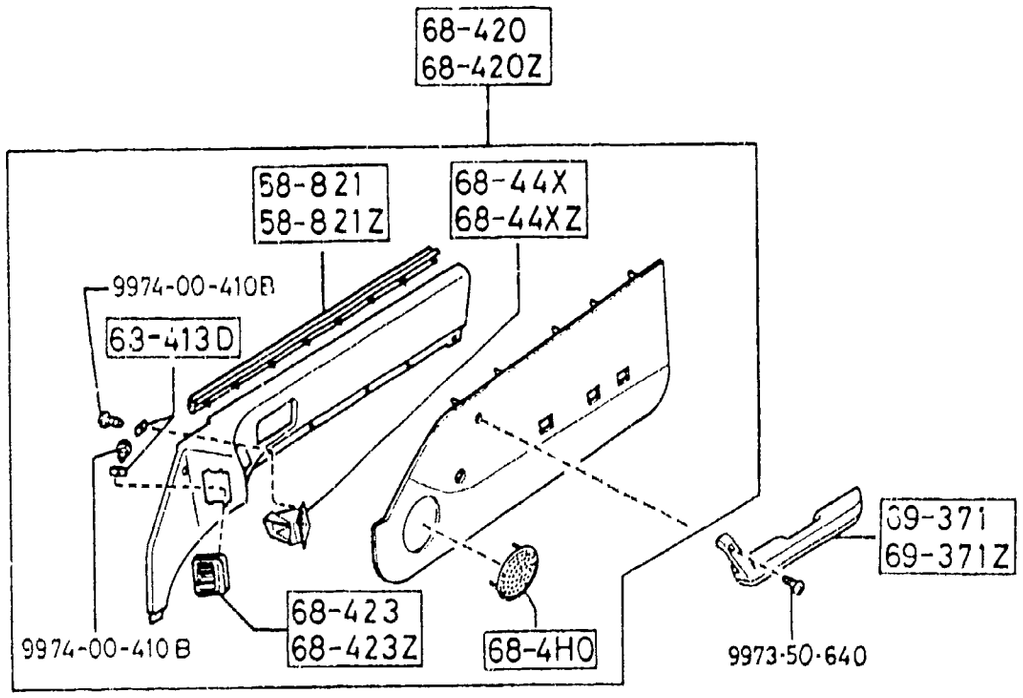


(CLOTH"A")
(CLOTH"B")

(CLOTH"D")
(LEATHER)

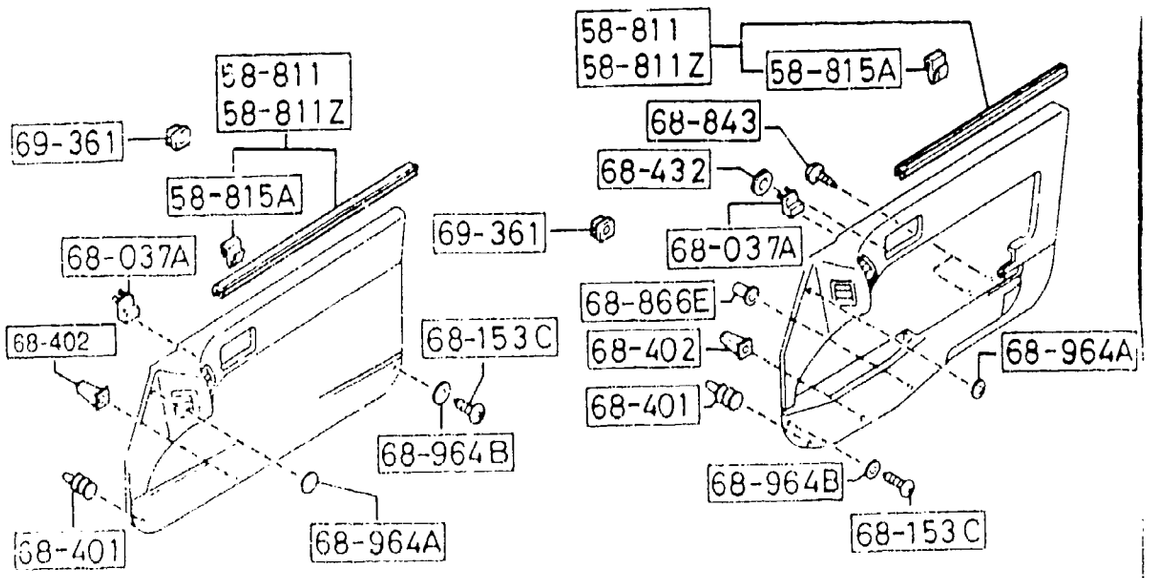






| PART NO. | QTY | MODEL/RESTRICTION | MODEL/RESTRICTION | MODEL/RESTRICTION | FROM-TO |
|---|---|---|---|---|---|
| CONT'D | | | | | |
| 02 | INT- | FD8 BLACK | | | |
| 48 | INT- | FD9 BLUE | | | |
| FC06-68-420B | 1 | BASE-OPT-2, TURBO-OPT, (LEATHER) (W/RR WIPER) | | | |
| 02 | INT- | FD8 BLACK | | | |
| 48 | INT- | FD9 BLUE | | | |
| F061-68-420B | 1 | BASE, (CLOTH 'A') ((W/O RR WIPER)>(W/O TURBO) ) | | | |
| 02 | INT- | FD8 BLACK | | | |
| 48 | INT- | FD9 BLUE | | | |
| FC17-68-420B A (FC17-68-420C) | 1 | | | | -0902 |
| 02 | INT- | FD8 BLACK | | | |
| 48 | INT- | FD9 BLUE | | | |
| FC17-68-420C | 1 | TURBO, (CLOTH 'D') ((W/RR WIPER)>(TURBO ) ) | | | 0902- |
| 02 | INT- | FD8 BLACK | | | |
| 48 | INT- | FD9 BLUE | | | |
| +68-420Z+ | | TRIM(L),DOOR | | | |
| FC04-68-450B | 1 | BASE-OPT-1, (CLOTH 'B') ((W/RR WIPER)>(W/O TURBO) ) | | | |
| 02 | INT- | FD8 BLACK | | | |
| 48 | INT- | FD9 BLUE | | | |
| FC06-68-450B | 1 | BASE-OPT-2, TURBO-OPT, (LEATHER) (W/RR WIPER) | | | |
| 02 | INT- | FD8 BLACK | | | |
| 48 | INT- | FD9 BLUE | | | |
| F061-68-450B | 1 | BASE, (CLOTH 'A') ((W/O RR WIPER)>(W/O TURBO) ) | | | |
| 02 | INT- | FD8 BLACK | | | |
| 48 | INT- | FD9 BLUE | | | |

0902 FC3***-901320

(CLOTH "D")
(LEATHER)

(THIS ILLUSTRATION CONSISTS OF 2 PAGES)

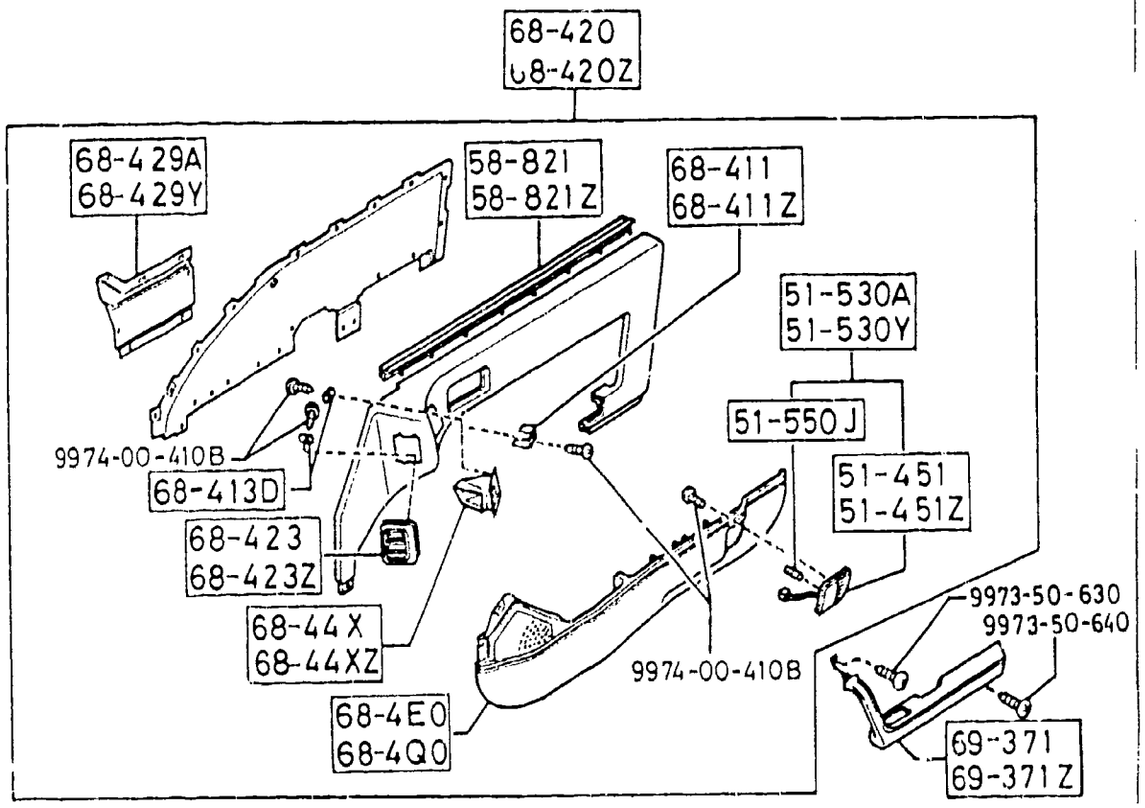


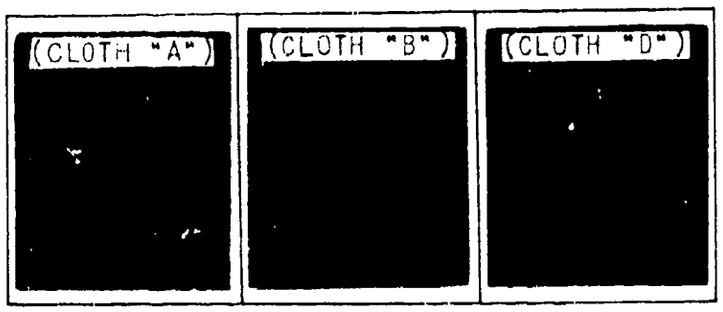






| PART NO. | QTY | MODEL/RESTRICTION | MODEL/RESTRICTION | MODEL/RESTRICTION | FROM-TO |
|---|---|---|---|---|---|
| CONT'D | | | | | |
| FC17-68-450B | 1 | | | | -0902 |
| A (FC17-68-450C) | | | | | |
| 02 | INT- | FD8 BLACK | | | |
| 48 | INT- | FD9 BLUE | | | |
| FC17-68-450C | 1 | TURBO, (CLOTH 'D') ((W/RR WIPER)>(TURBO ) ) | | | 0902- |
| 02 | INT- | FD8 BLACK | | | |
| 48 | INT- | FD9 BLUE | | | |
| +---------+ \| 68-423 \| +---------+ FB01-68-423 | 1 | COVER(R),DUST-DOOR TRIM | | | |
| 02 | INT- | FD8 BLACK | | | |
| 48 | INT- | FD9 BLUE | | | |
| +---------+ \| 68-423Z \| +---------+ FB01-68-453 | 1 | COVER(L),DUST-DOOR TRIM | | | |
| 02 | INT- | FD8 FE1 BLACK | | | |
| 48 | INT- | FD9 BLUE | | | |
| +---------+ \| 68-429A \| +---------+ FC04-68-433 | 1 | COVER(R),POCKET-DOOR TRIM TURBO, BASE-OPT-2, TURBO-OPT, (CLOTH 'D') (LEATHER) | | | |
| 02 | INT- | FD8 FE1 BLACK | | | |
| 48 | INT- | FD9 BLUE | | | |
| +---------+ \| 68-429Y \| +---------+ FC04-68-463 | 1 | COVER(L),POCKET-DOOR TRIM TURBO, BASE-OPT-2, TURBO-OPT, (CLOTH 'D') (LEATHER) | | | |
| 02 | INT- | FD8 FE1 BLACK | | | |
| 48 | INT- | FD9 BLUE | | | |
| +---------+ \| 68-432 \| +---------+ G033-68-432 | 2 | NUT,SPEED | | | |
| +---------+ \| 68-44X \| +---------+ FB01-68-44X | 1 | GRILLE(R),VENT.-DOOR TRIM | | | |

0902 FC3***-901320

(CLOTH"A")
(CLOTH"B")

(THIS ILLUSTRATION CONSISTS OF 2 PAGES)

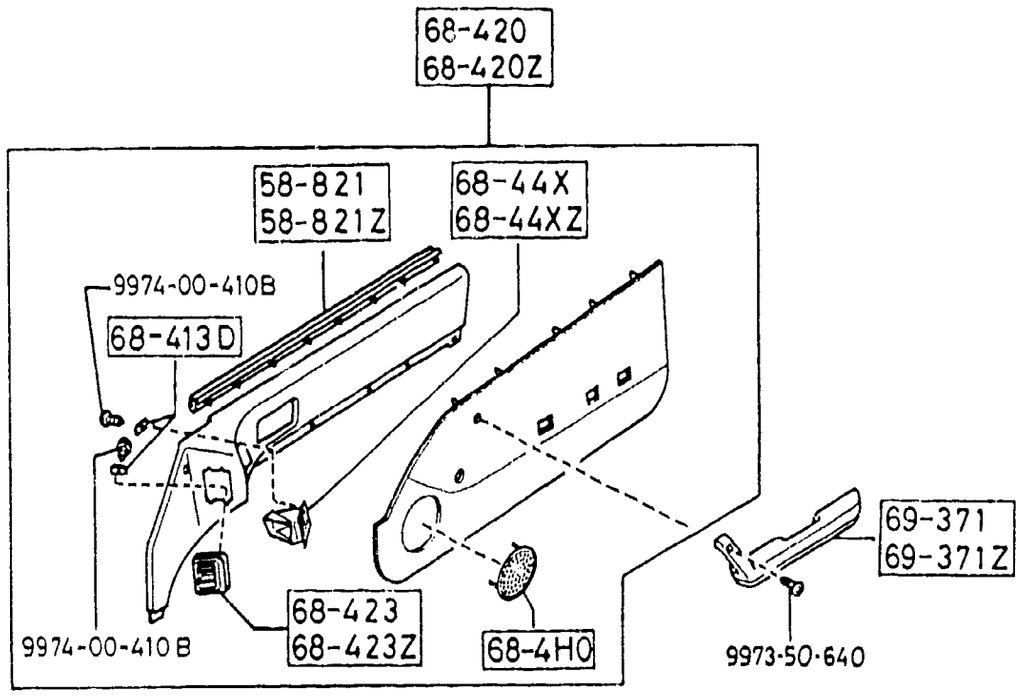


(CLOTH"A")
(CLOTH"B")

(CLOTH"D")
(LEATHER)

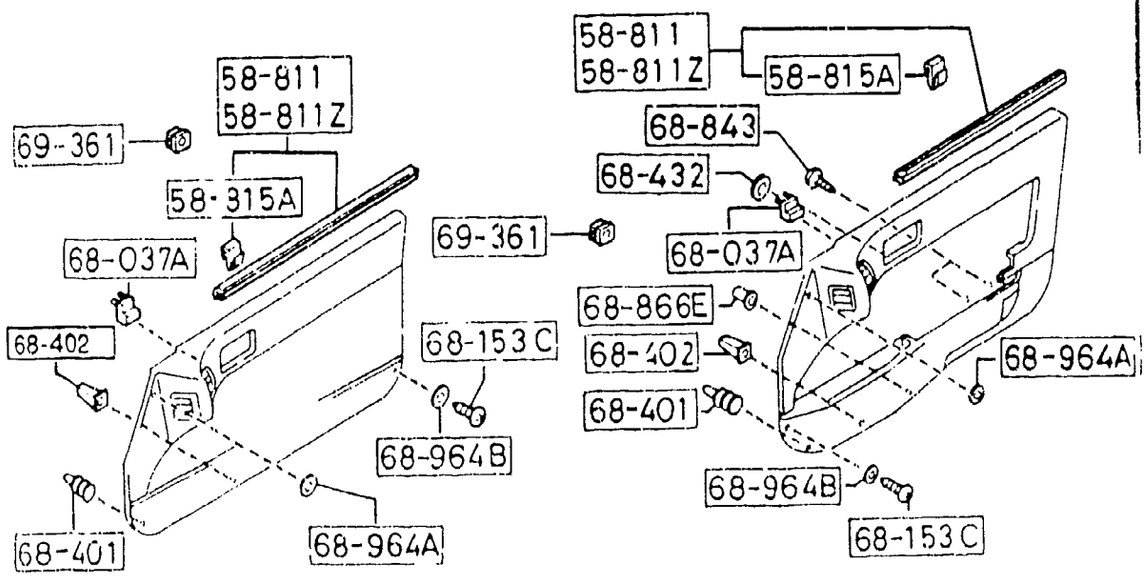






| PART NO. | QTY | MODEL/RESTRICTION | MODEL/RESTRICTION | MODEL/RESTRICTION | FROM-TO |
|---|---|---|---|---|---|
| CONT'D | | | | | |
| 02 | INT- | FD8 FE1 BLACK | | | |
| 48 | INT- | FD9 BLUE | | | |
| +---------+ | | | | | |
| \| 68-44XZ \| | | GRILLE(L),VENT.-DOOR TRIM | | | |
| +---------+ | | | | | |
| FB01-68-47X | 1 | | | | |
| 02 | INT- | FD8 FE1 BLACK | | | |
| 48 | INT- | FD9 BLUE | | | |
| +---------+ | | | | | |
| \| 68-843 \| | | SCREW,TAPPING | | | |
| +---------+ | | | | | |
| UB39-68-805 | 4 | | | | |
| +---------+ | | | | | |
| \| 68-866E \| | | FASTENER,SEAL | | | |
| +---------+ | | | | | |
| 0187-58-922 | 2 | TURBO, BASE-OPT-2, TURBO-OPT, (CLOTH 'D') (LEATHER) | | | |
| +---------+ | | | | | |
| \| 68-964A \| | | WASHER | | | |
| +---------+ | | | | | |
| G030-68-964C | 2 | | | | |
| 02 | INT- | FD8 FE1 BLACK | | | |
| 48 | INT- | FD9 BLUE | | | |
| +---------+ | | | | | |
| \| 68-964B \| | | WASHER | | | |
| +---------+ | | | | | |
| FB01-68-427 | 2 | BASE-OPT-1, BASE, (CLOTH 'B') (CLOTH 'A') | | | |
| 02 | INT- | FD8 FE1 BLACK | | | |
| 48 | INT- | FD9 BLUE | | | |
| FB01-68-427 | 4 | TURBO, BASE-OPT-2, TURBO-OPT, (CLOTH 'D') (LEATHER) | | | |
| 02 | INT- | FD8 FE1 BLACK | | | |
| 48 | INT- | FD9 BLUE | | | |
| +---------+ | | | | | |
| \| 69-361 \| | | GROMMET,SCREW | | | |
| +---------+ | | | | | |
| B316-69-361 | 12 | | | | |
| +---------+ | | | | | |
| \| 69-371 \| | | REST(R),ARM | | | |
| +---------+ | | | | | |
| FB01-69-370 | 1 | | | | |
| 02 | INT- | FD8 FE1 BLACK | | | |
| 48 | INT- | FD9 BLUE | | | |

(CLOTH"D")
(LEATHER)

(THIS ILLUSTRATION CONSISTS OF 2 PAGES)

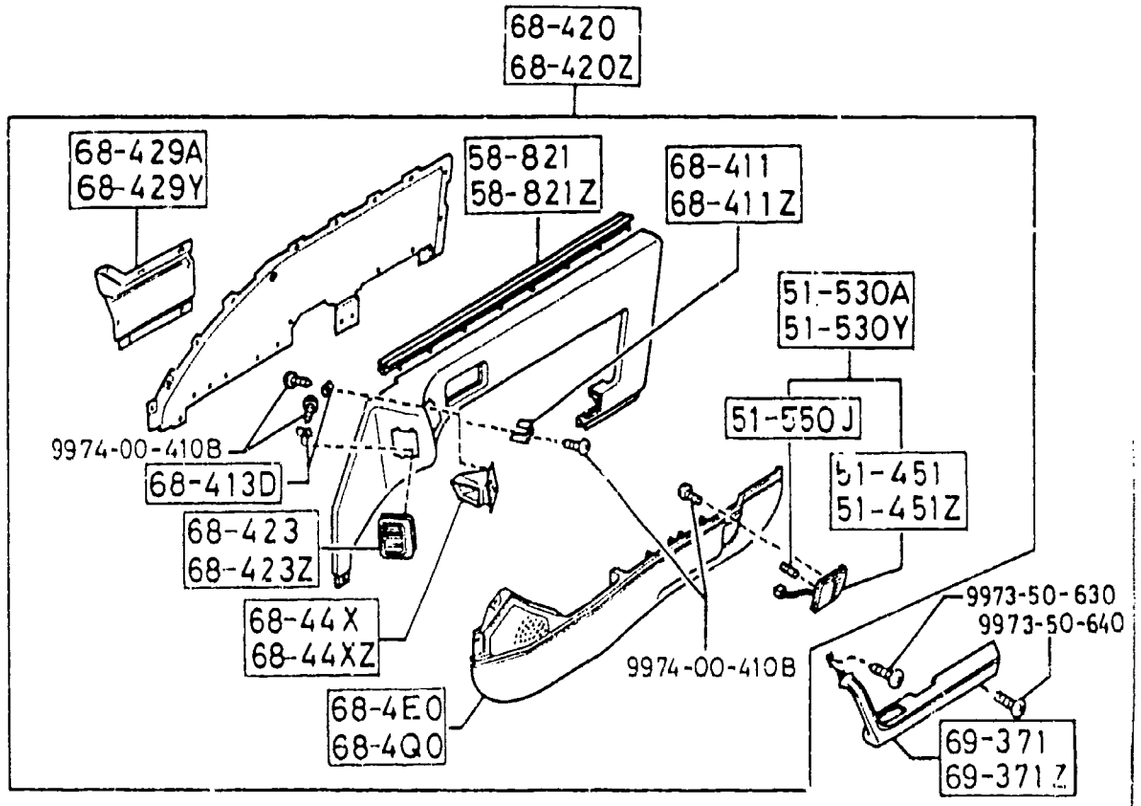


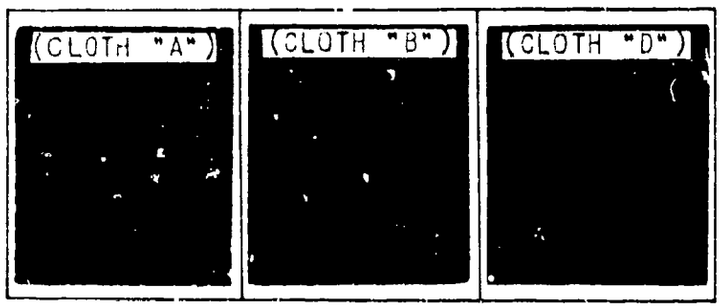


5840 -6 * FRONT DOOR TRIMS & RELATED PARTS
(COUPE)

| PART NO. | QTY | MODEL/RESTRICTION | MODEL/RESTRICTION | MODEL/RESTRICTION | FROM-TO |
|---|---|---|---|---|---|
| 69-371Z | | REST(L),ARM | | | |
| FB01-69-390 | 1 | | | | |
| 02 | INT- | FD8 FE1 BLACK | | | |
| 48 | INT | FD9 BLUE | | | |

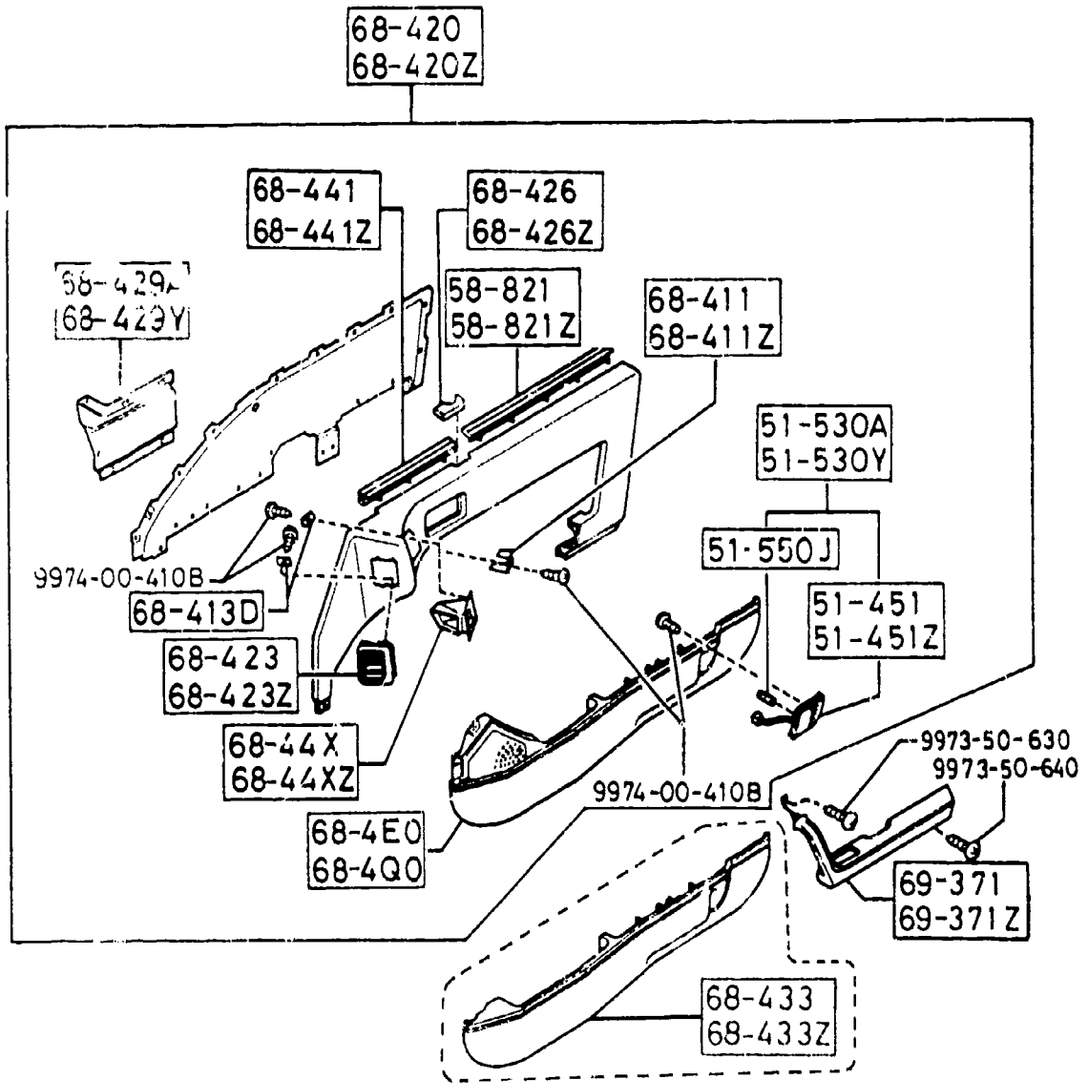


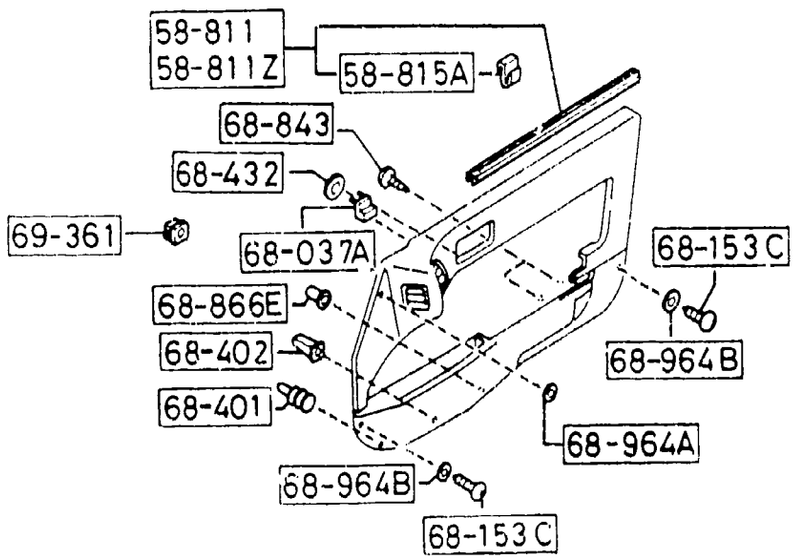


AUFA03

5840A -1 FRONT DOOR TRIMS & RELATED PARTS
(CONVERTIBLE)

| PART NO. | QTY | MODEL/RESTRICTION | MODEL/RESTRICTION | MODEL/RESTRICTION | FROM-TO |
|---|---|---|---|---|---|
| 51-451 | | LENS(R),COURTESY LAMP | | | |
| FB05-51-531 | 1 | | | | |
| 51-451Z | | LENS(L),COURTESY LAMP | | | |
| FB05-51-591 | 1 | | | | |
| 51-530A | | LAMP(R),COURTESY-DR TRIM | | | |
| FB05-51-530 | 1 | | | | |
| 51-530Y | | LAMP(L),COURTESY-DR TRIM | | | |
| FB05-51-590 | 1 | | | | |
| 51-550J | | BULB | | | |
| 99701-6040 | 2 | 12V 3.8W | | | |
| 58-811 | | WEATHERSTRIP(R),OUT. | | | |
| FB67-58-810D | 1 | | | | |
| 58-811Z | | WEATHERSTRIP(L),OUT. | | | |
| FB67-59-810D | 1 | | | | |
| 58-815A | | CLIP,WEATHERSTRIP-OUTER | | | |
| FB01-58-815 | 12 | | | | |
| 58-821 | | WEATHERSTRIP(R),INN. | | | |
| FB67-58-821 | 1 | | | | |
| 58-821Z | | WEATHERSTRIP(L),INN. | | | |
| FB67-59-821 | 1 | | | | |
| 68-037A | | GROMMET,SCREW | | | |
| FB01-68-403 | 2 | | | | |
| 68-153C | | SCREW,TAPPING | | | |
| FB01-68-425 | 4 | | | | |
| 02 | INT- | FD8 FE1 BLACK | | | |
| 48 | INT- | FD9 BLUE | | | |
| 68-4E0 | | PLATE(R),KICK-D.TRIM | | | |
| FC04-68-4E0B | 1 | | | | |

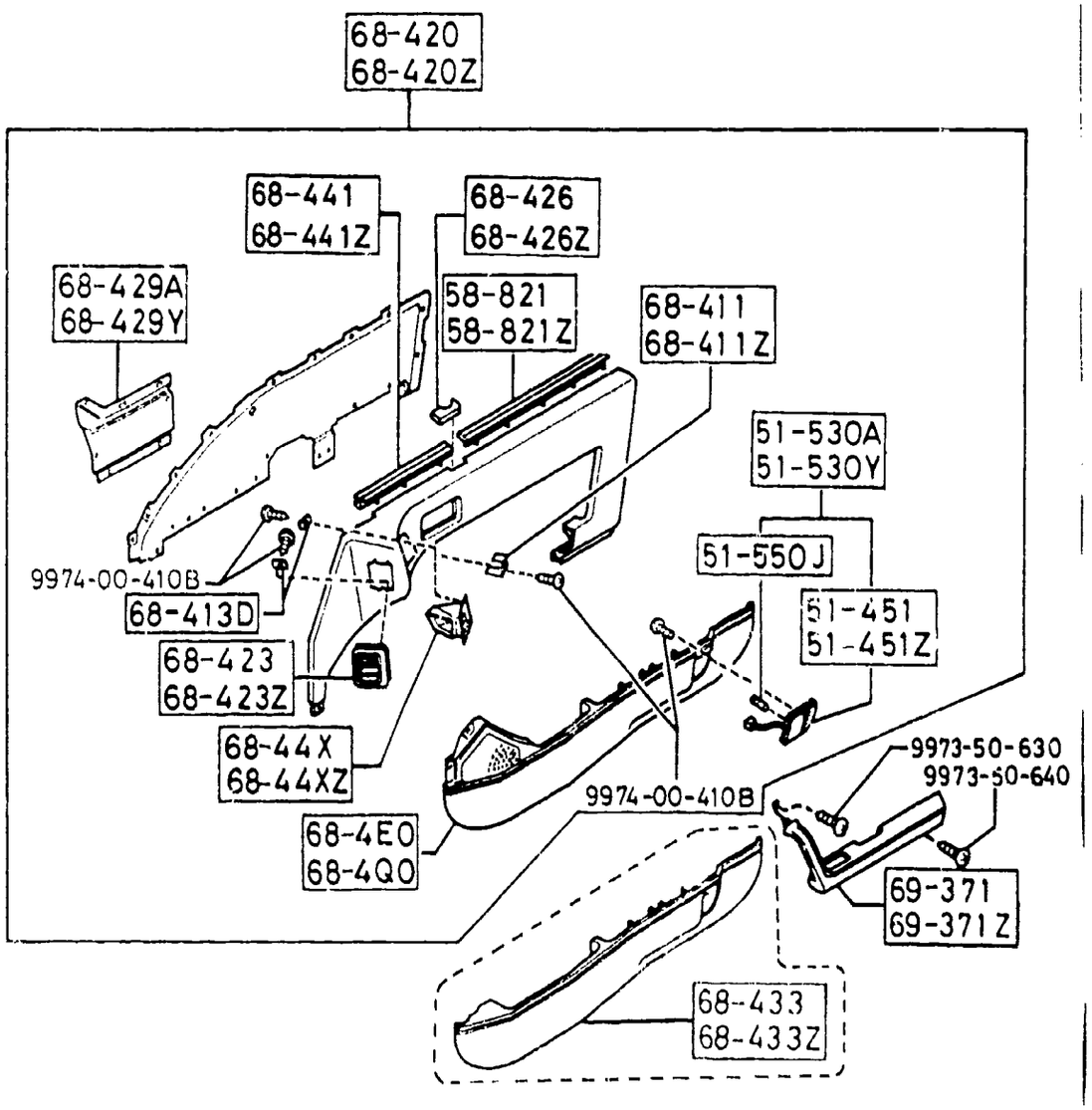


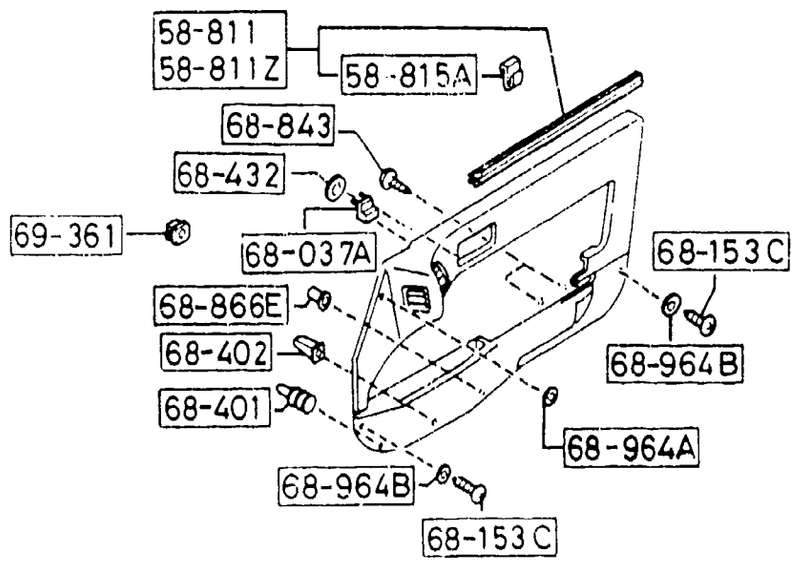






| PART NO. | QTY | MODEL/RESTRICTION | MODEL/RESTRICTION | MODEL/RESTRICTION | FROM-TO |
|---|---|---|---|---|---|
| CONT'D | | | | | |
| 02 | INT- | FD8 BLACK | | | |
| 48 | INT- | FD9 BLUE | | | |
| 68-4Q0 | | PLATE(L),KICK-D.TRIM | | | |
| FC04-68-4Q0B | 1 | | | | |
| 02 | INT- | FD8 BLACK | | | |
| 48 | INT- | FD9 BLUE | | | |
| 68-401 | | FASTENER,DOOR TRIM | | | |
| B100-68-401 | 16 | | | | |
| 68-402 | | GROMMET,SCREW | | | |
| FA54-68-402 | 8 | | | | |
| 68-411 | | BRKT NO.1(R),GRILLE-TRIM | | | |
| FB01-68-414 | 1 | | | | |
| 68-411Z | | BRKT NO.1(L),GRILLE-TRIM | | | |
| FB01-68-415 | 1 | | | | |
| 68-413D | | WASHER | | | |
| FB01-68-413 | 10 | | | | |
| 68-420 | | TRIM(R),DOOR | | | |
| FC33-68-420B | 1 | | | | |
| 02 | INT- | FD8 BLACK | | | |
| 48 | INT- | FD9 BLUE | | | |
| 68-420Z | | TRIM(L),DOOR | | | |
| FC33-68-450B | 1 | | | | |
| 02 | INT- | FD8 BLACK | | | |
| 48 | INT- | FD9 BLUE | | | |
| 68-423 | | COVER(R),DUST-DOOR TRIM | | | |
| FB01-68-423 | 1 | | | | |
| 02 | INT- | FD8 FE1 BLACK | | | |
| 48 | INT- | FD9 BLUE | | | |

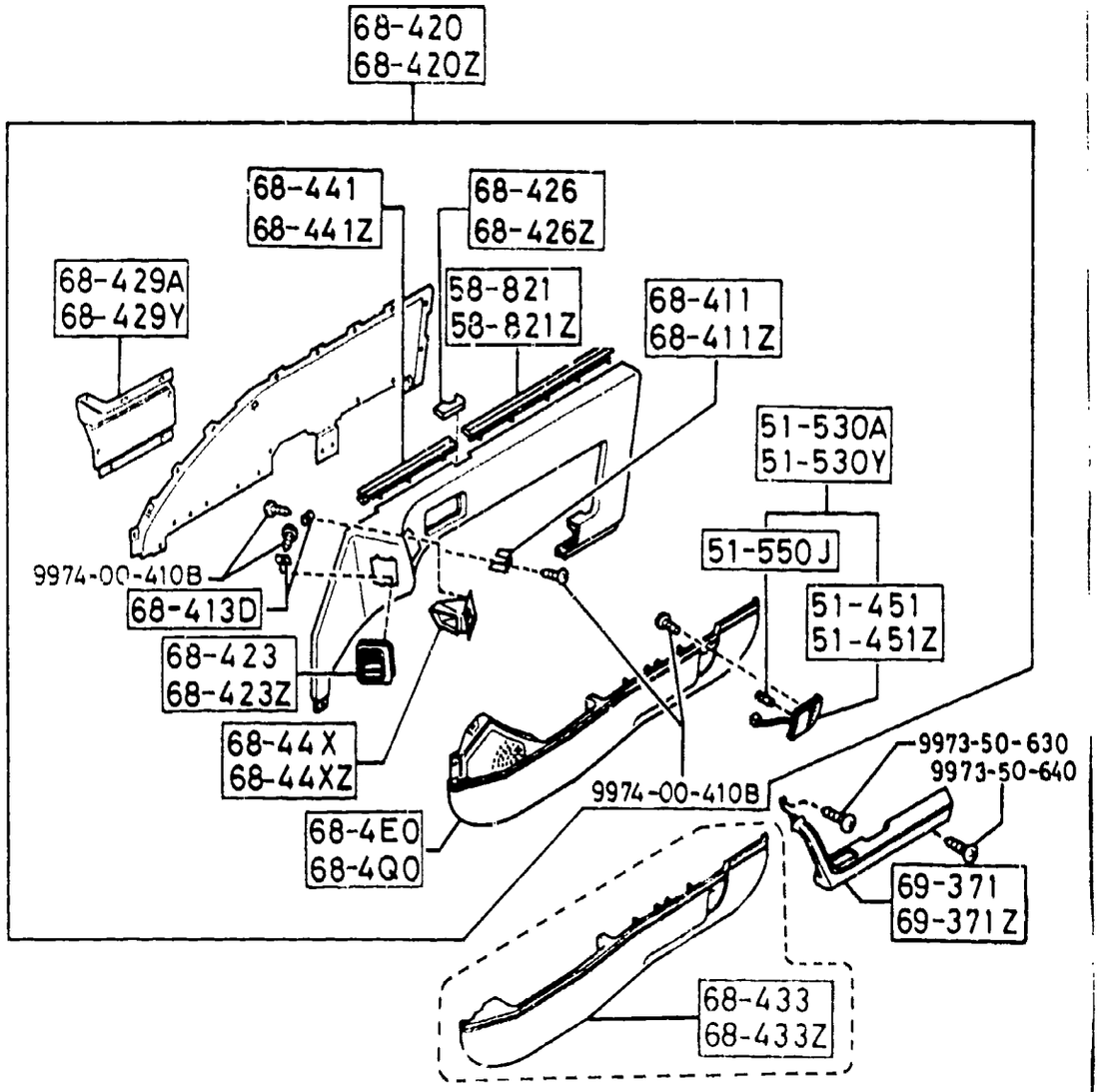


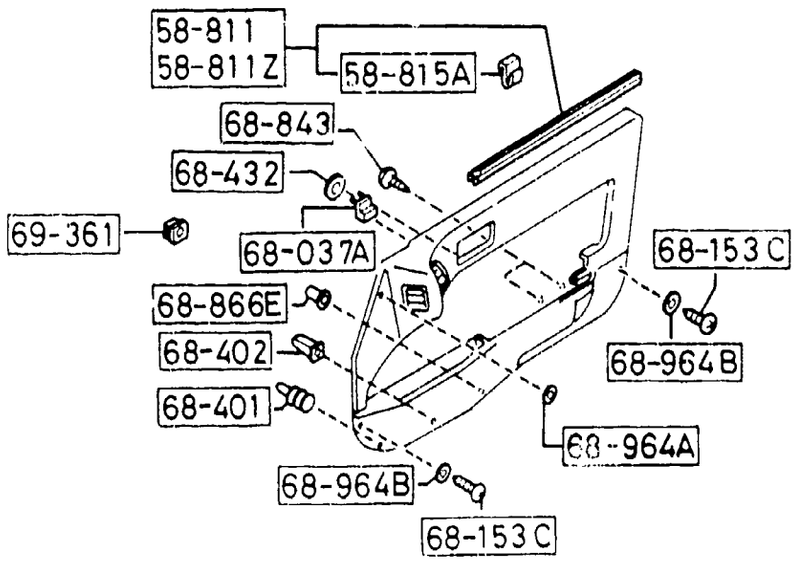


AUFA03



| PART NO. | QTY | MODEL/RESTRICTION | MODEL/RESTRICTION | MODEL/RESTRICTION | FROM-TO |
|---|---|---|---|---|---|
| 68-423Z | | COVER(L),DUST-DOOR TRIM | | | |
| FB01-68-453 | 1 | | | | |
| 02 INT- | | FD8 FE1 BLACK | | | |
| 48 INT- | | FD9 BLUE | | | |
| 68-426 | | VESSEL(R),CHANNEL | | | |
| FB67-68-426 | 1 | | | | |
| 68-426Z | | VESSEL(L),CHANNEL | | | |
| FB67-68-456 | 1 | | | | |
| 68-429A | | COVER(R),POCKET-DOOR TRIM | | | |
| FC04-68-433 | 1 | | | | |
| 02 INT- | | FD8 FE1 BLACK | | | |
| 48 INT- | | FD9 BLUE | | | |
| 68-429Y | | COVER(L),POCKET-DOOR TRIM | | | |
| FC04-68-463 | 1 | | | | |
| 02 INT- | | FD8 FE1 BLACK | | | |
| 48 INT- | | FD9 BLUE | | | |
| 68-432 | | NUT,SPEED | | | |
| G033-68-432 | 2 | | | | |
| 68-433 | | POCKET(R),DOOR TRIM | | | |
| FB67-68-427 | 1 | | | | |
| 02 INT- | | FD8 FE1 BLACK | | | |
| 48 INT- | | FD9 BLUE | | | |
| 68-433Z | | POCKET(L),DOOR TRIM | | | |
| FB67-68-457 | 1 | | | | |
| 02 INT- | | FD8 FE1 BLACK | | | |
| 48 INT- | | FD9 BLUE | | | |
| 68-44X | | GRILLE(R),VENT.-DOOR TRIM | | | |
| FB01-68-44X | 1 | | | | |
| 02 INT- | | FD8 FE1 BLACK | | | |
| 48 INT- | | FD9 BLUE | | | |

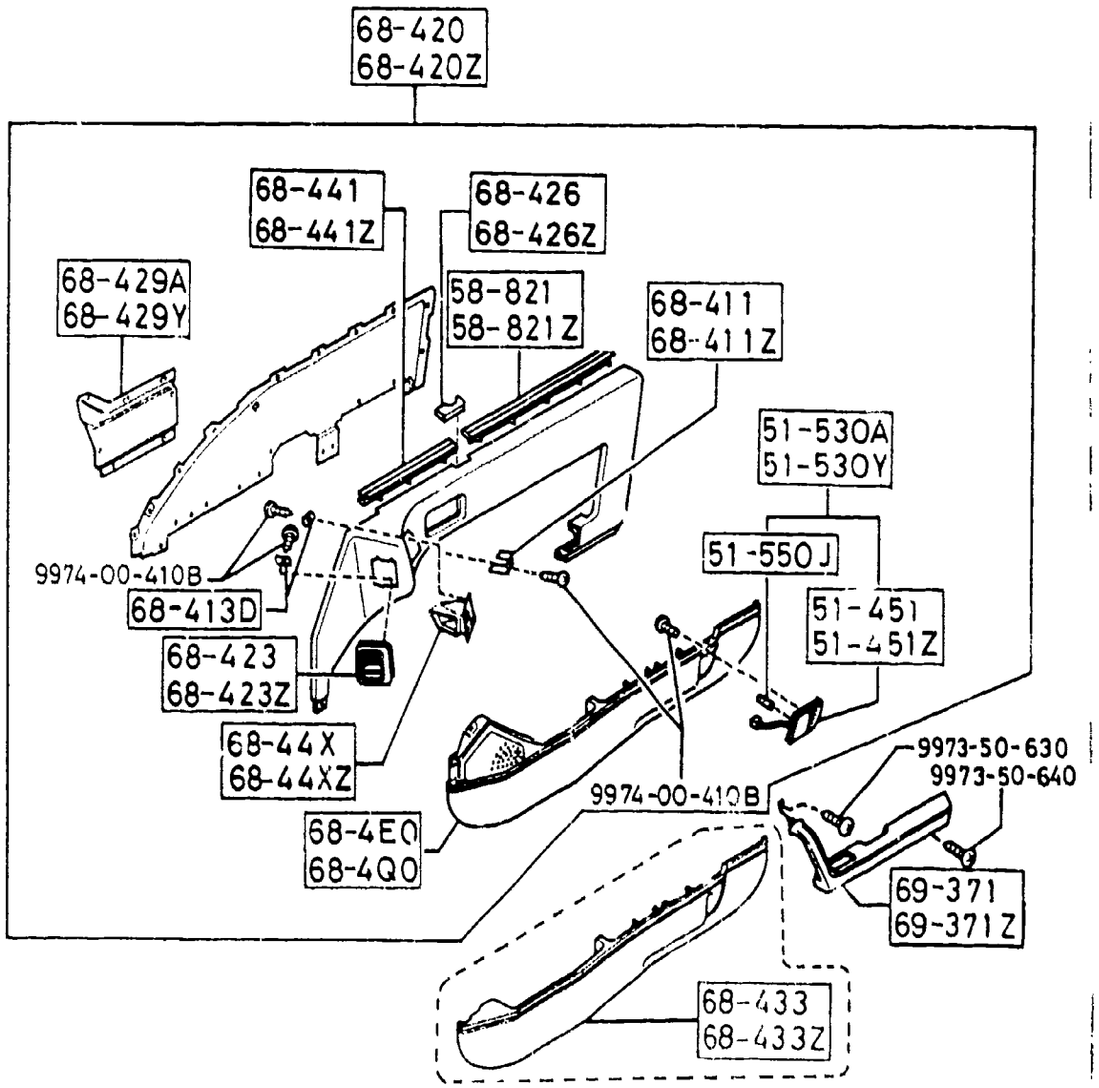


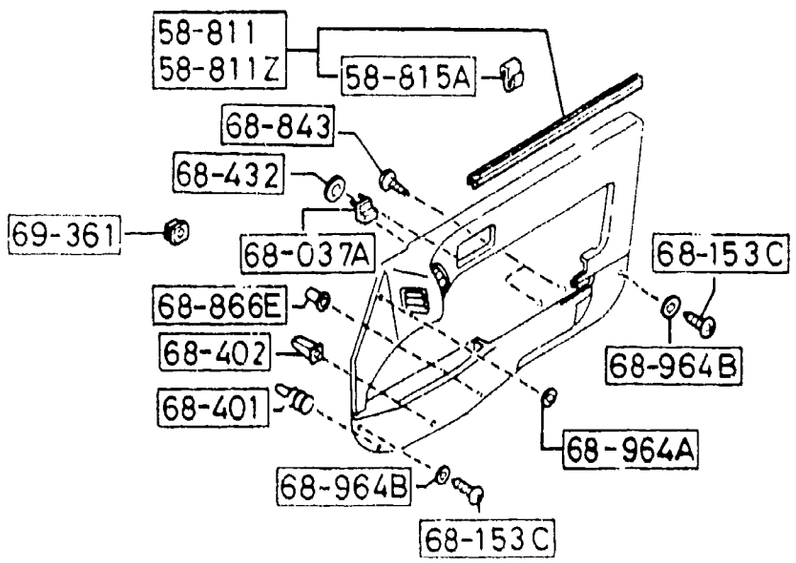


AUFA03

5840A -4 * FRONT DOOR TRIMS & RELATED PARTS (CONVERTIBLE)

| PART NO. | QTY | MODEL/RESTRICTION | MODEL/RESTRICTION | MODEL/RESTRICTION | FROM-TO |
|---|---|---|---|---|---|
| 68-44XZ | | GRILLE(L),VENT.-DOOR TRIM | | | |
| FB01-68-47X | 1 | | | | |
| 02 | INT- | FD8 FE1 BLACK | | | |
| 48 | INT- | FD9 BLUE | | | |
| 68-441 | | GARNISH(R),DOOR | | | |
| FB67-68-422 | 1 | | | | |
| 68-441Z | | GARNISH(L),DOOR | | | |
| FB67-68-452 | 1 | | | | |
| 68-843 | | SCREW,TAPPING | | | |
| UB39-68-805 | 4 | | | | |
| 68-866E | | FASTENER,SEAL | | | |
| 0187-58-922 | 2 | | | | |
| 68-964A | | WASHER | | | |
| G030-68-964C | 2 | | | | |
| 02 | INT- | FD8 FE1 BLACK | | | |
| 48 | INT- | FD9 BLUE | | | |
| 68-964B | | WASHER | | | |
| FB01-68-427 | 4 | | | | |
| 02 | INT- | FD8 FE1 BLACK | | | |
| 48 | INT- | FD9 BLUE | | | |
| 69-361 | | GROMMET,SCREW | | | |
| B316-69-361 | 12 | | | | |
| 69-371 | | REST(R),ARM | | | |
| FB01-69-370 | 1 | | | | |
| 02 | INT- | FD8 FE1 BLACK | | | |
| 48 | INT- | FD9 BLUE | | | |
| 69-371Z | | REST(L),ARM | | | |
| FB01-69-390 | 1 | | | | |
| 02 | INT- | FD8 FE1 BLACK | | | |
| 48 | INT- | FD9 BLUE | | | |

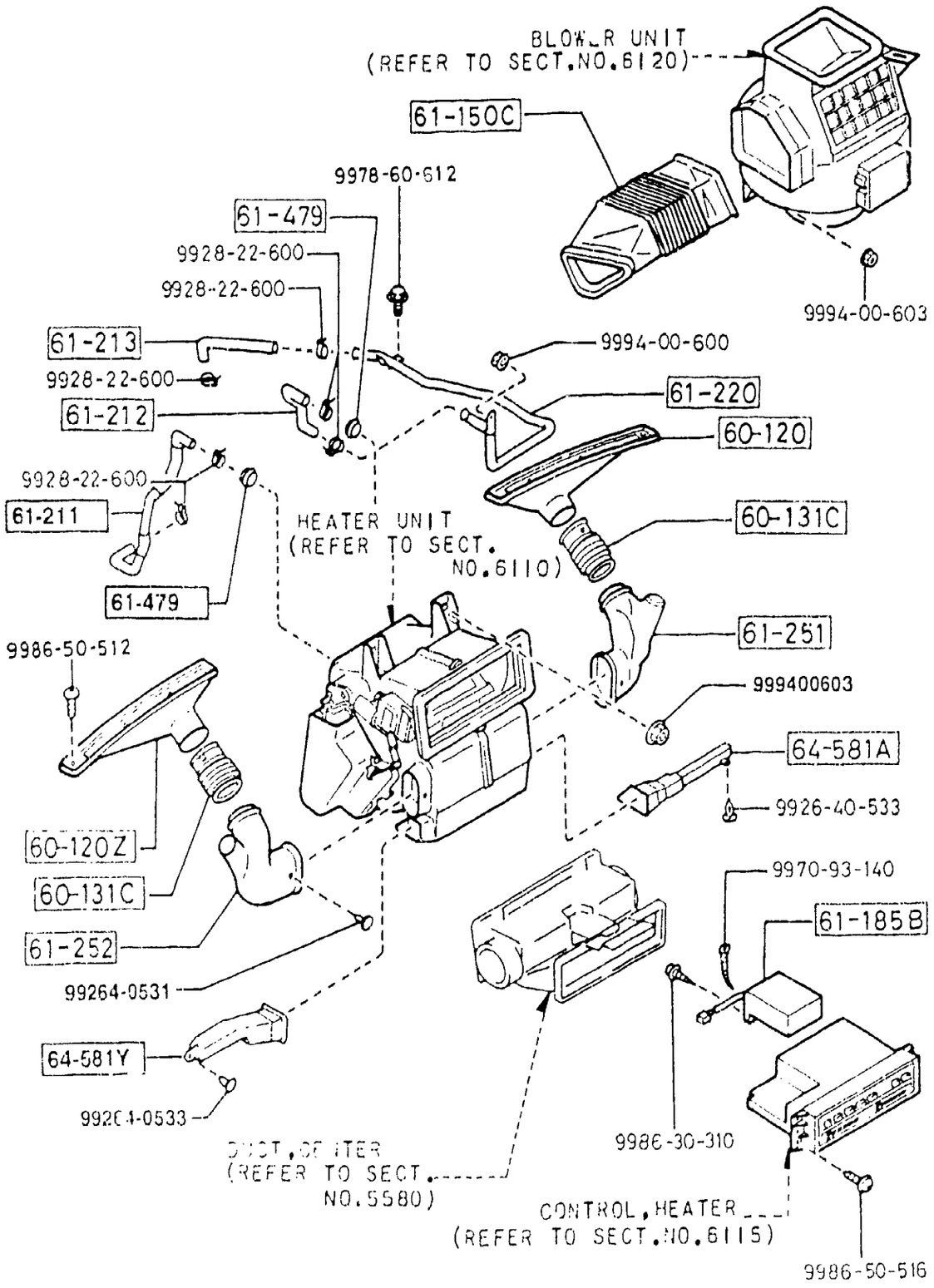


| PART NO. | QTY | MODEL/RESTRICTION | MODEL/RESTRICTION | MODEL/RESTRICTION | FROM-TO |
|---|---|---|---|---|---|
| 60-120 | | NOZZLE(R),DEFROSTER | | | |
| FB01-60-121B | 1 | | | | |
| 60-120Z | | NOZZLE(L),DEFROSTER | | | |
| FB01-60-141B | 1 | | | | |
| 60-131C | | DUCT,DEFROSTER | | | |
| FB01-61-256 | 2 | | | | |
| 61-150C | | DUCT AIR | | | |
| FB01-61-150A | 1 | (W/O AIR CON.) | | | |
| 61-185B | | BOX,AMP-HEATER CONTROL | | | |
| FB01-61-185B | 1 | | | | |
| 61-211 | | HOSE NO.1,WATER | | | |
| FB01-61-211C | 1 | ((W/O TURBO))(AT) (TURBO) | | | |
| FB03-61-211 | 1 | ((W/O TURBO))(MT) | | | |
| 61-212 | | HOSE NO.2,WATER | | | |
| FB01-61-212B | 1 | | | | |
| 61-213 | | HOSE NO.3,WATER | | | |
| FB01-61-213 | 1 | | | | |
| 61-220 | | PIPE,HEATER | | | |
| FB01-61-220C | 1 | (W/O TURBO) | | | |
| FB44-61-220A | 1 | (TURBO) | | | |
| 61-251 | | HOSE,DEFROSTER | | | |
| FB01-61-251A | 1 | | | | |
| 61-252 | | HOSE,DEFROSTER | | | |
| FB01-61-252 | 1 | | | | |
| 61-479 | | GROMMET | | | |
| 8871-61-219A | 2 | | | | |
| 64-581A | | DUCT(R),SHOWER | | | |
| FB02-61-155C | 1 | | | | |

## 6100 HEATER

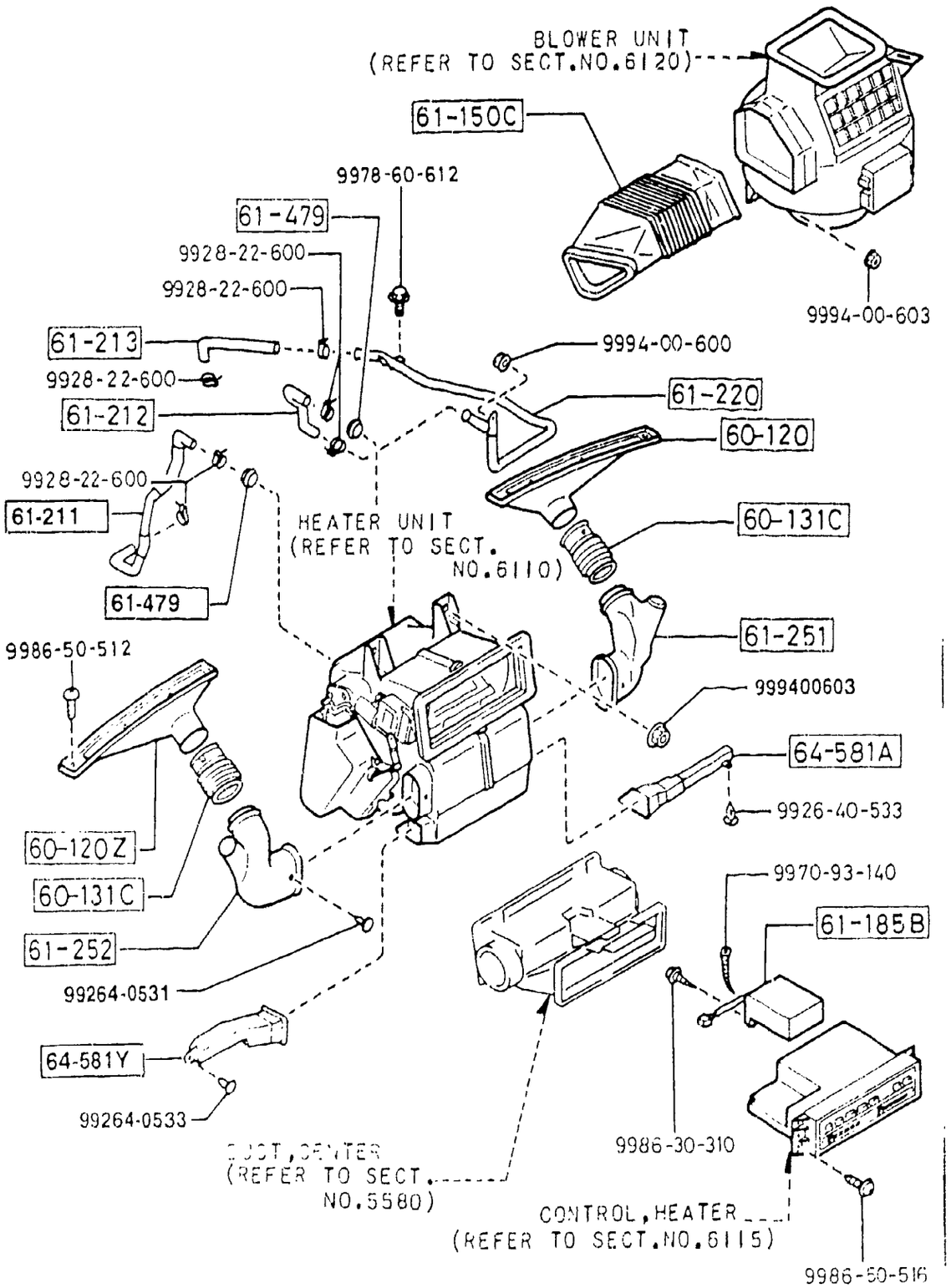


| PART NO. | QTY | MODEL/RESTRICTION | MODEL/RESTRICTION | MODEL/RESTRICTION | FROM-TO |
|---|---|---|---|---|---|
| CONT'D | | | | | |
| 02 | INT- | FD8 BLACK | | | |
| 48 | INT- | FD9 BLUE | | | |
| +---------+ | | | | | |
| \| 64-581Y \| | | DUCT(L),SHOWER | | | |
| +---------+ | | | | | |
| FB02-61-156B | 1 | | | | |

## 6110 HEATER UNIT COMPONENTS

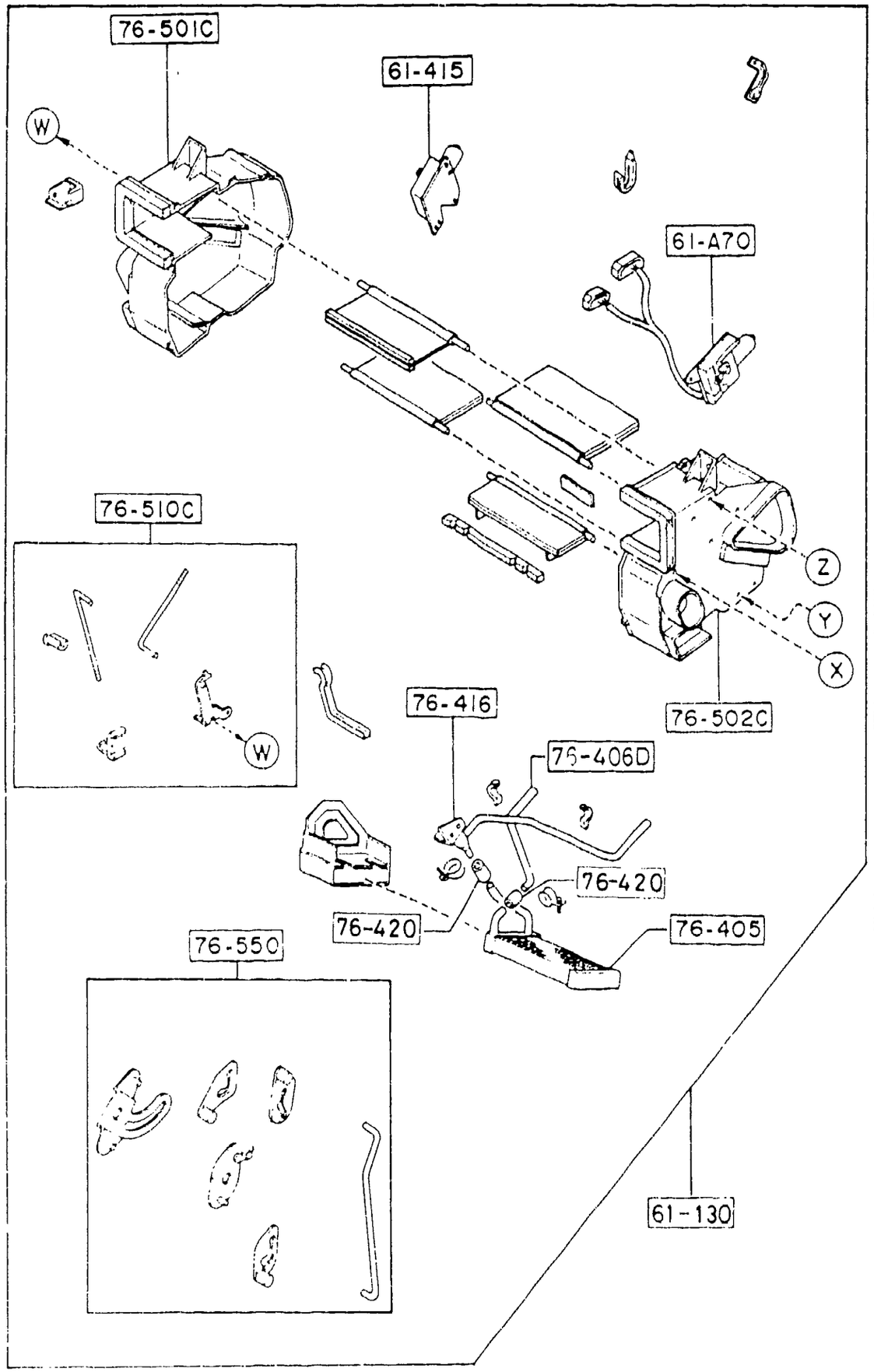


| PART NO. | QTY | MODEL/RESTRICTION | MODEL/RESTRICTION | MODEL/RESIRICIION | FROM-TO |
|---|---|---|---|---|---|
| 61-A70 | | ACTUATOR,MODE-HEATER UNIT | | | |
| FB01-61-A70A | 1 | | | | |
| 61-130 | | HEATER UNIT | | | |
| FB01-61-130C | 1 | | | | |
| 61-415 | | ACTUATOR,TEMP | | | |
| FB01-61-A60A | 1 | | | | |
| 76-405 | | CORE,HEATER | | | |
| FB01-61-A10 | 1 | | | | |
| 76-4060 | | PIPE,HEATER UNIT | | | |
| FB01-61-A15 | 1 | | | | |
| 76-416 | | VALVE,WATER | | | |
| FB01-61-A40 | 1 | | | | |
| 76-420 | | HOSE | | | |
| 8871-76-420 | 2 | | | | |
| 76-501C | | CASE(R),HEATER UNIT | | | |
| FB01-61-A01 | 1 | | | | |
| 76-502C | | CASE(L),HEATER UNIT | | | |
| FB01-61-A02A | 1 | | | | |
| 76-510C | | LINK SET,TEMP | | | |
| FB01-61-A20 | 1 | | | | |
| 76-550 | | LINK SET,MODE | | | |
| FB01-61-A30A | 1 | | | | |

## 6115 HEATER CONTROLS COMPONENTS

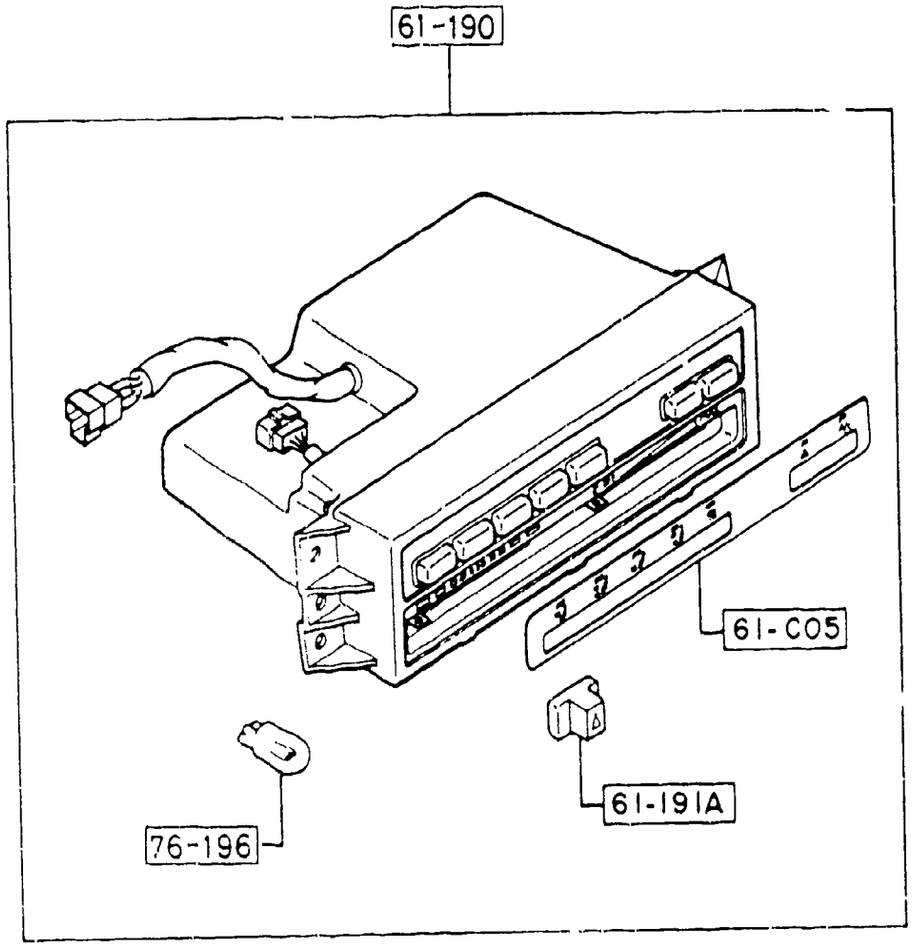


| PART NO. | QTY | MODEL/RESTRICTION | MODEL/RESTRICTION | MODEL/RESTRICTION | FROM-TO |
|---|---|---|---|---|---|
| 61-C05 | | FILM,PANEL-NO.1 | | | |
| FC01-61-C05 | 1 | | | | |
| 61-190 | | CONTROL,HEATER | | | |
| FC01-61-190B | 1 | | | | |
| 61-191A | | KNOB NO.1 | | | |
| FB03-61-191 | 2 | | | | |
| 76-196 | | BULB | | | |
| FA55-76-196 | 2 | | | | |

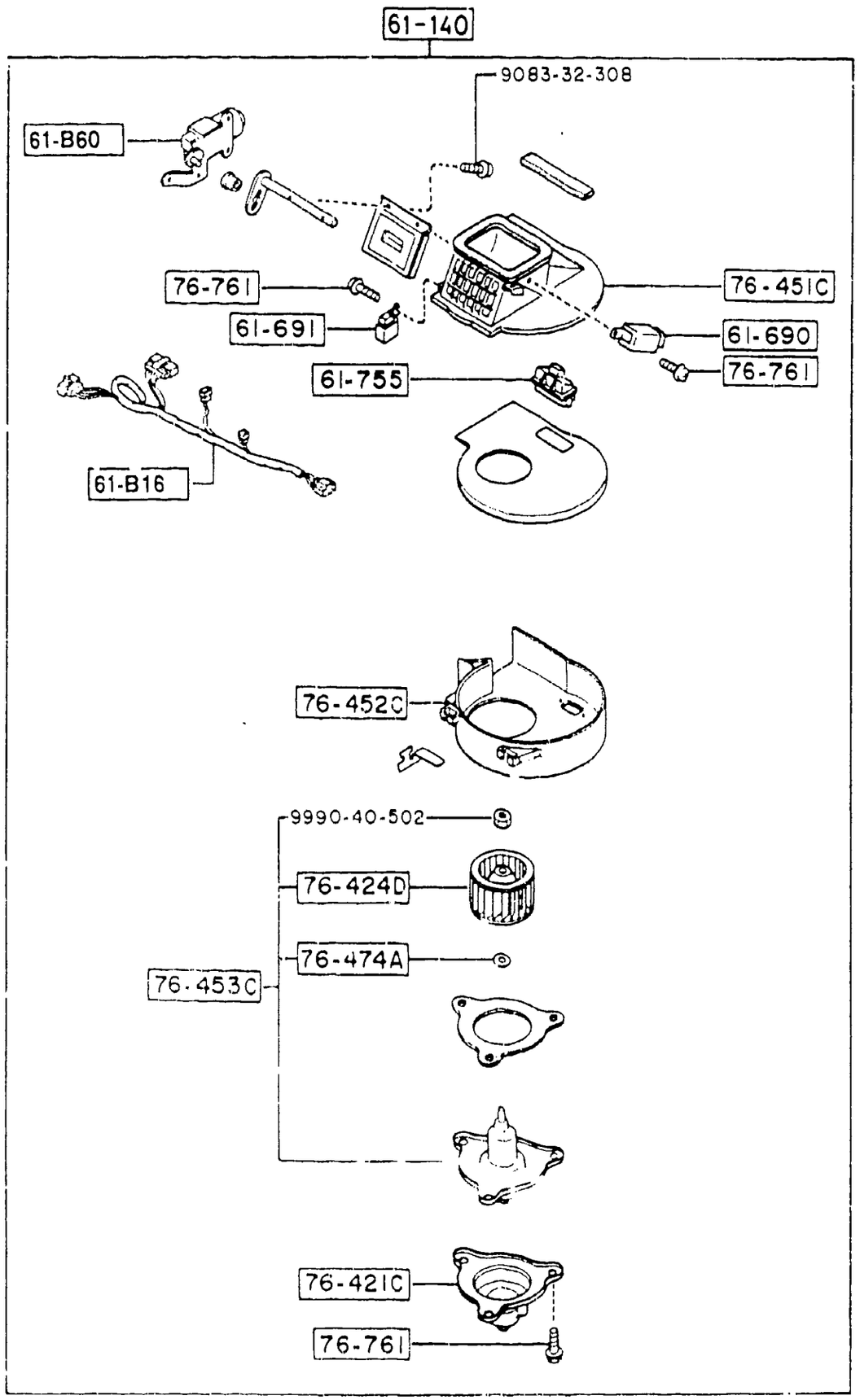


| PART NO. | QTY | MODEL/RESTRICTION | MODEL/RESTRICTION | MODEL/RESTRICTION | FROM-TO |
|---|---|---|---|---|---|
| 61-B16 | | HARNESS,BLOWER UNIT | | | |
| FC01-61-B16 | 1 | ((W/O TURBO))(MT) ) | | | |
| FC07-61-B16 | 1 | ((W/O TURBO))(AT) ) (TURBO) | | | |
| 61-B60 | | ACTUATOR,RECYCLE & FRESH | | | |
| FB01-61-B60 | 1 | | | | |
| 61-140 | | BLOWER UNIT | | | |
| FC01-61-140 | 1 | ((W/O TURBO))(MT) ) | | | |
| FC07-61-140 | 1 | ((W/O TURBO))(AT) ) (TURBO) | | | |
| 61-690 | | RELAY | | | |
| FB03-61-691 | 1 | W/IG.RELAY BLOWER ((W/O TURBO))(AT) ) (TURBO) | | | |
| 61-691 | | RELAY | | | |
| FB02-61-691 | 1 | | | | |
| 61-755 | | TRANSISTOR,POWER | | | |
| FB01-61-769 | 1 | | | | |
| 76-421C | | COVER,MOTOR | | | |
| UB39-61-B40 | 1 | | | | |
| 76-424D | | FAN,MOTOR | | | |
| 8871-76-456 | 1 | | | | |
| 76-451C | | CASE(R),BLOWER | | | |
| FB01-61-B01 | 1 | | | | |
| 76-452C | | CASE(L),BLOWER | | | |
| FB01-61-B02A | 1 | | | | |
| 76-453C | | MOTOR,BLOWER | | | |
| UB94-61-B10 | 1 | | | | |
| 76-474A | | WASHER,PLAIN | | | |
| FA55-76-474 | 1 | | | | |

## 6120 HEATER BLOWER COMPONENTS

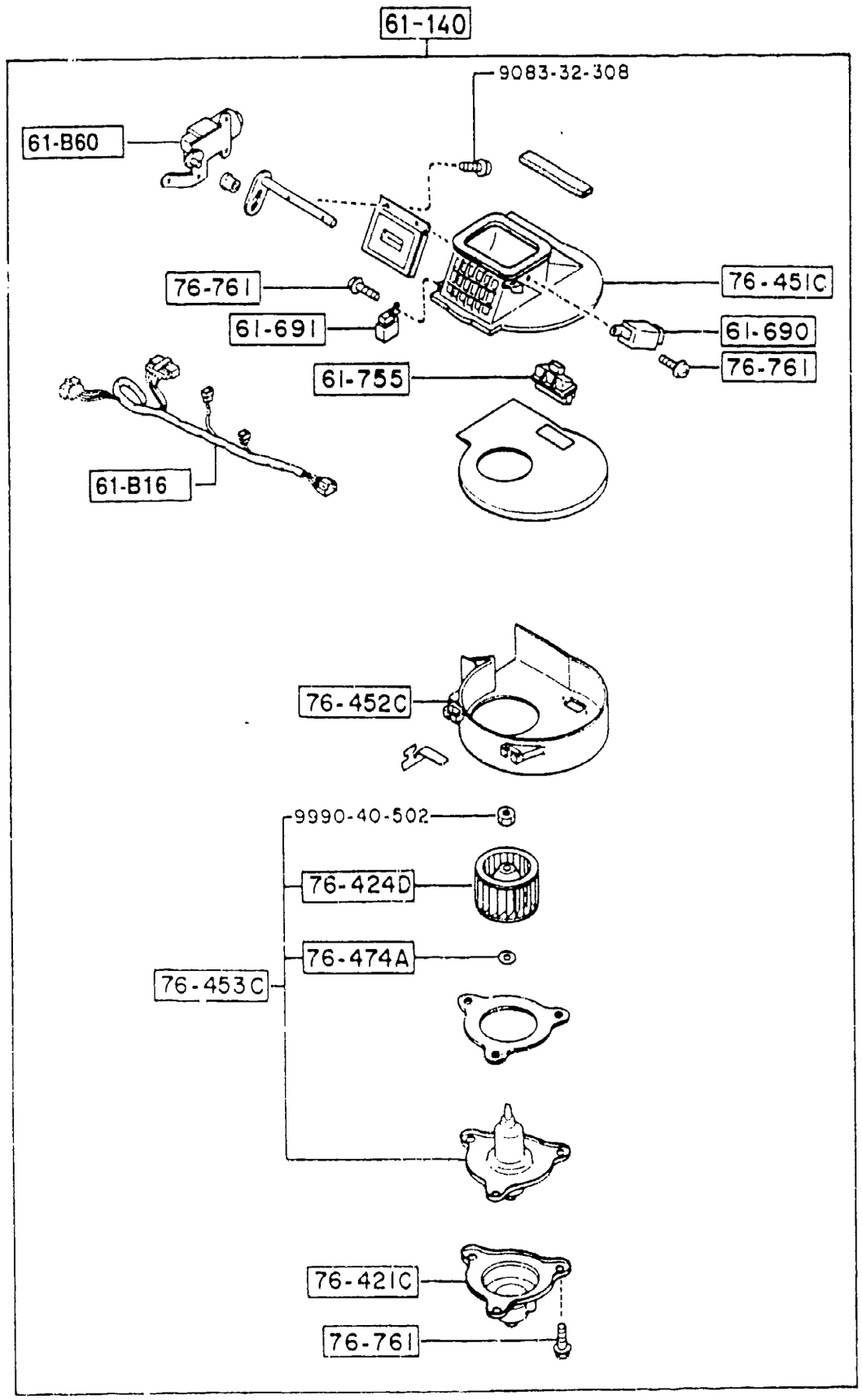


| PART NO. | QTY | MODEL/RESTRICTION | MODEL/RESTRICTION | MODEL/RESTRICTION | FROM-TO |
|---|---|---|---|---|---|
| 76-761 | | SCREW | | | |
| FA55-76-455 | 5 | | | | |

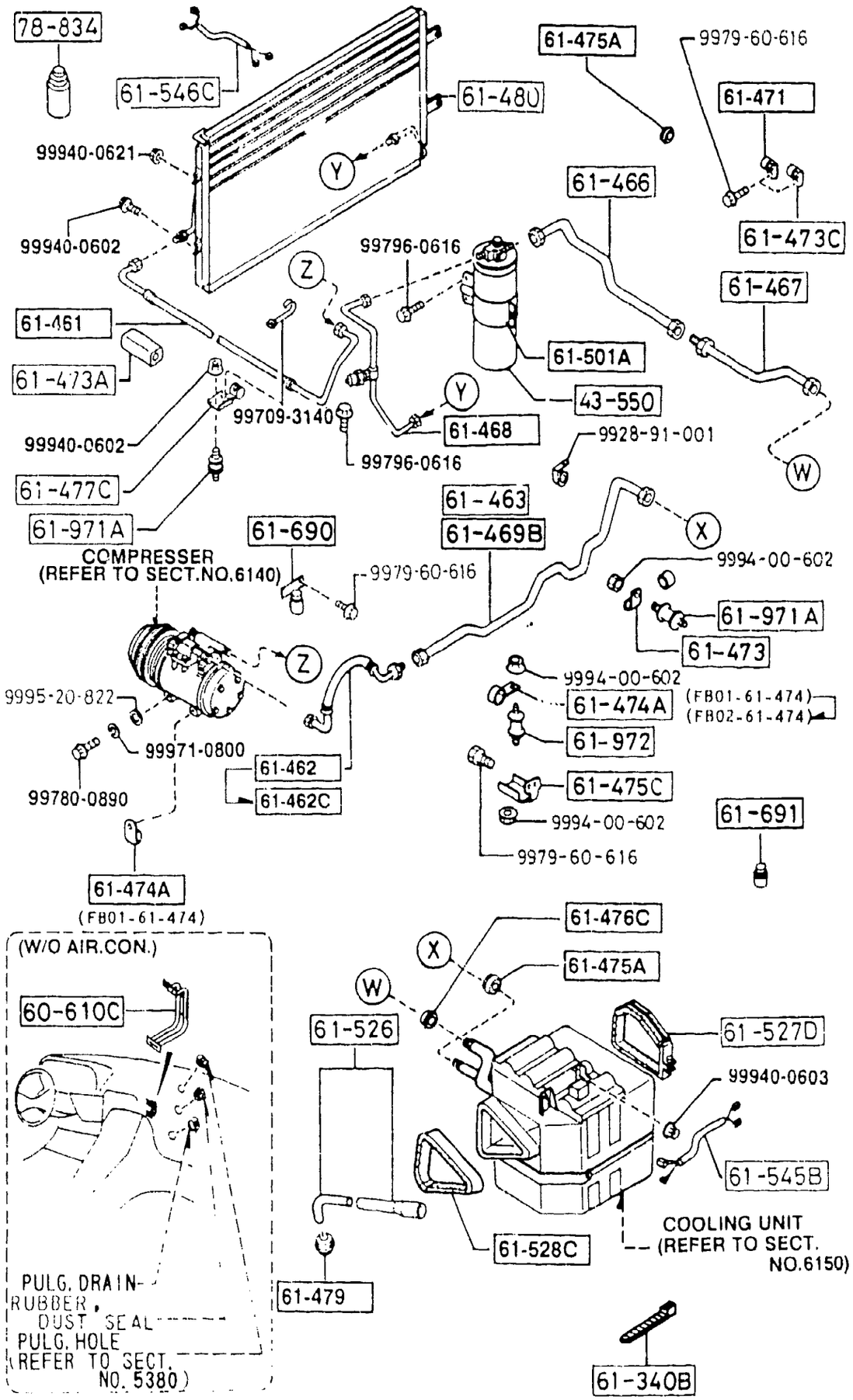




| PART NO. | QTY | MODEL/RESTRICTION | MODEL/RESTRICTION | MODEL/RESTRICTION | FROM-TO |
|---|---|---|---|---|---|
| 43-550 | | TANK,RESERVE | | | |
| 8572-61-510 | 1 | | | | |
| 60-610C | | FRAME,PIPE-UPPER | | | |
| FC01-60-610 | 1 | (W/O AIR CON.) | | | |
| 61-340B | | TYRAP | | | |
| FA38-61-340 | 13 | (A) | | | |
| 61-461 | | HOSE,FLEXIBLE-HIGH | | | |
| FB01-61-461 | 1 | ('91 MODEL) | | | |
| FB02-61-461 | 1 | ('92 MODEL) | | | |
| 61-462 | | HOSE,FLEXIBLE-LOW | | | |
| FB01-61-467A | 1 | ('91 MODEL) | | | |
| 61-462C | | HOSE,FLEXIBLE-LOW | | | |
| FB02-61-462 | 1 | ('92 MODEL) | | | |
| 61-463 | | PIPE NO.1,COOLER | | | |
| FC01-61-468 | 1 | (W/O TURBO) | | | |
| 61-466 | | PIPE NO.4,COOLER | | | |
| FB01-61-465A | 1 | | | | |
| 61-467 | | PIPE NO.5,COOLER | | | |
| FB01-61-466C | 1 | | | | |
| 61-468 | | PIPE NO.6,COOLER | | | |
| FB01-61-464B | 1 | | | | |
| 61-469B | | PIPE NO.7,COOLER | | | |
| FB44-61-467C | 1 | (TURBO) | | | |
| 61-471 | | CLIP,PIPE | | | |
| FB01-61-471 | 1 | | | | |
| 61-473 | | CLIP,PIPE | | | |
| FB01-61-473A | 1 | | | | |

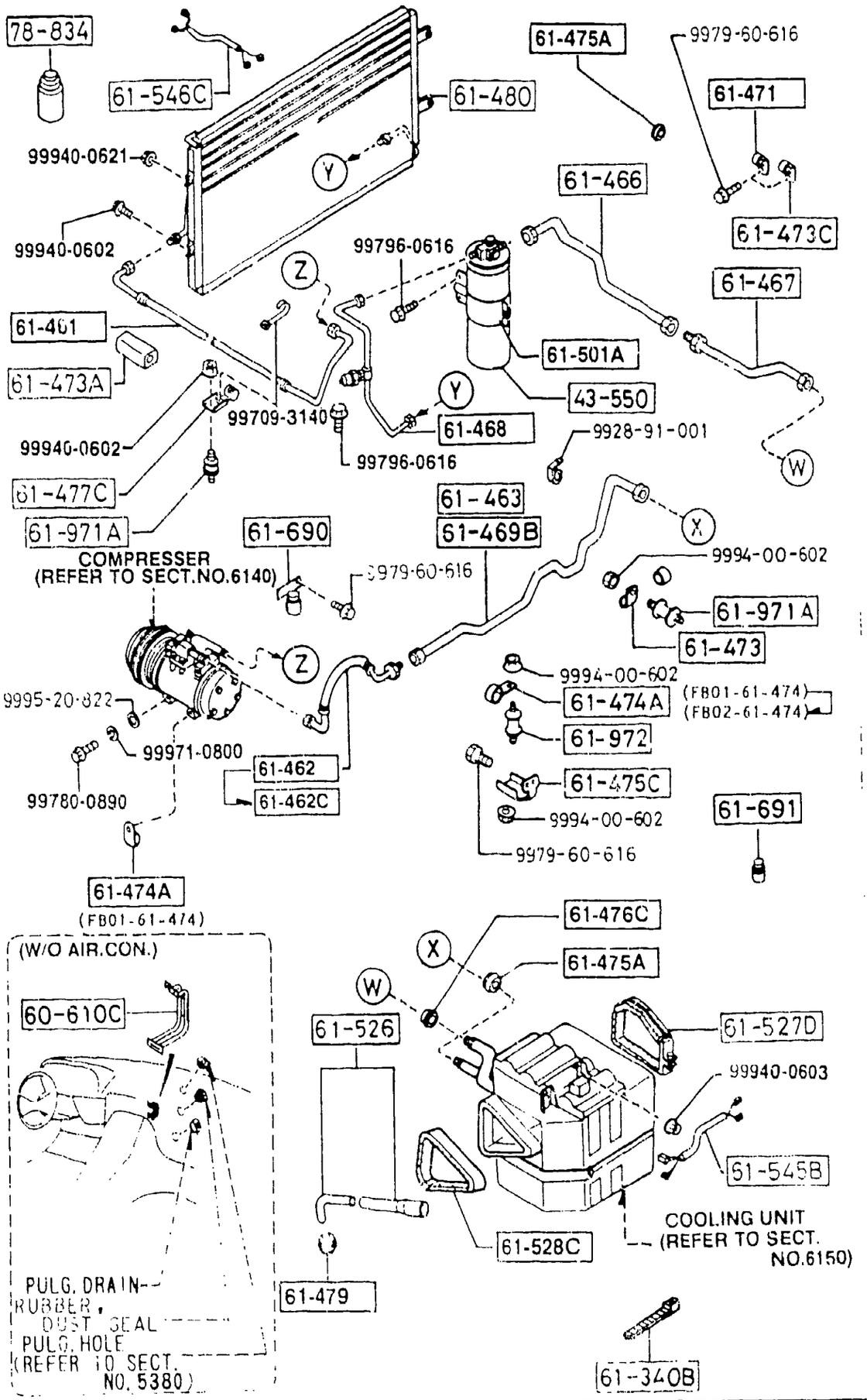




| PART NO. | QTY | MODEL/RESTRICTION | MODEL/RESTRICTION | MODEL/RESTRICTION | FROM·TO |
|---|---|---|---|---|---|
| 61-473A | | PROTECTOR | | | |
| FB02-61-472 | 1 | | | | |
| 61-473C | | CLIP | | | |
| FB02-61-473 | 1 | | | | |
| 61-474A | | CLIP | | | |
| FB01-61-474 | 1 | ('92 MODEL) | | | |
| FB01-61-474 | 2 | ('91 MODEL) | | | |
| FB02-61-474 | 1 | ('92 MODEL) | | | |
| 61-475A | | GROMMET | | | |
| 8562-61-475 | 2 | | | | |
| 61-475C | | BRACKET | | | |
| FB01-61-475A | 1 | | | | |
| 61-476C | | GROMMET | | | |
| 8562-61-476 | 1 | | | | |
| 61-477C | | CLIP | | | |
| FB01-61-477 | 1 | ('91 MODEL) | | | |
| FB02-61-477 | 1 | ('92 MODEL) | | | |
| 61-479 | | GROMMET | | | |
| FB01-61-478A | 1 | | | | |
| 61-480 | | CONDENSER | | | |
| FB01-61-480A | 1 | | | | |
| 61-501A | | BRACKET,LIQUID TANK | | | |
| FB01-61-501 | 1 | | | | |
| 61-526 | | HOSE,DRAIN | | | |
| FB01-61-52X | 1 | | | | |
| 61-527D | | RING,SEAL | | | |
| FB01-61-527A | 1 | | | | |
| 61-528C | | PLATE,SEAL | | | |

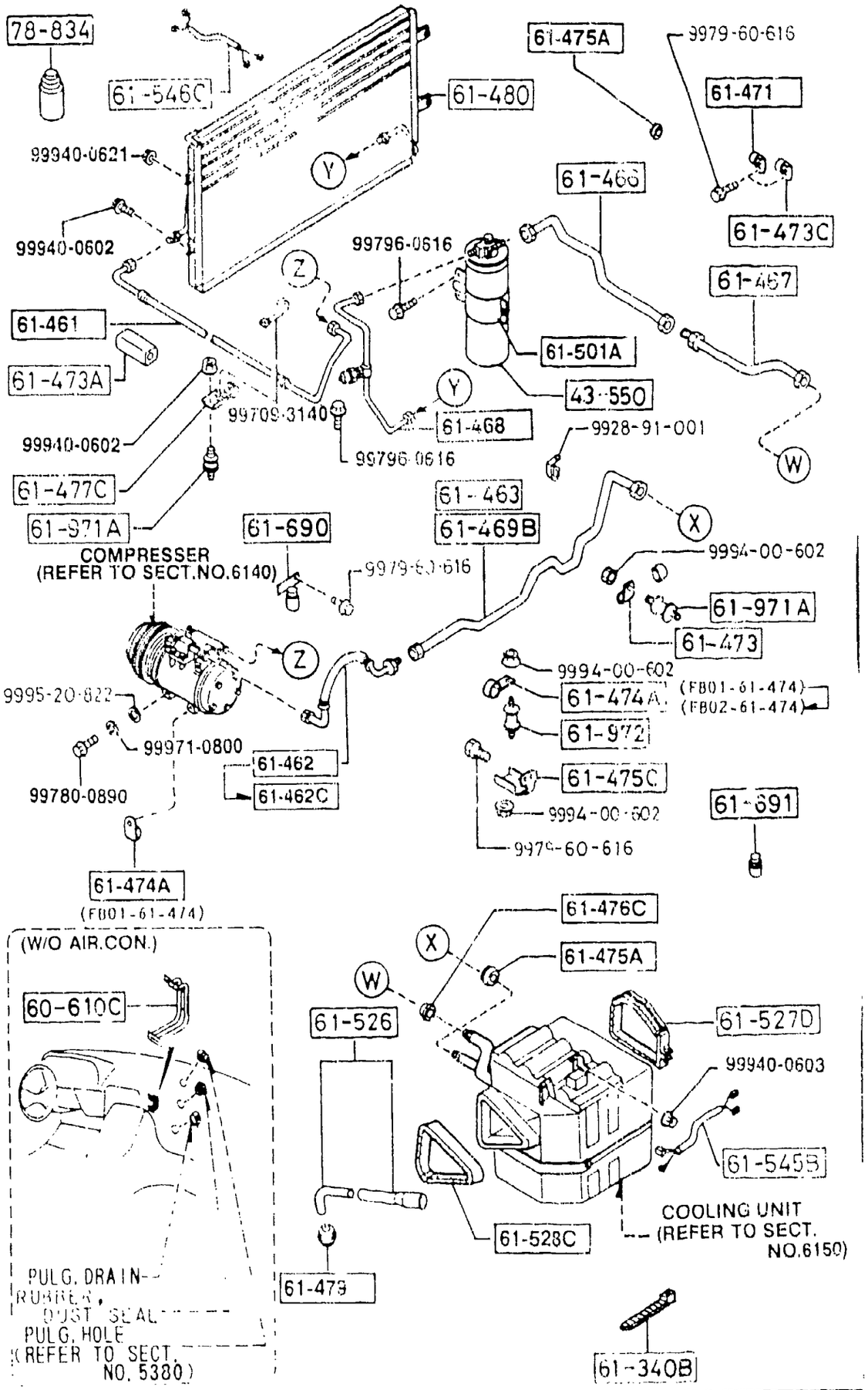




| PART NO. | QTY | MODEL/RESTRICTION | MODEL/RESTRICTION | MODEL/RESTRICTION | FROM-TO |
|---|---|---|---|---|---|
| CONT'D | | | | | |
| FB01-61-528 | 1 | | | | |
| 61-545B | | HARNESS,WIRE | | | |
| FB44-61-545A | 1 | | | | |
| 61-546C | | HARNESS,WIRE | | | |
| FC01-61-546 | 1 | | | | |
| 61-690 | | RELAY | | | |
| FC01-61-690 | 1 | | | | |
| 61-691 | | RELAY | | | |
| FB01-61-691 | 1 | | | | |
| 61-971A | | RUBBER,INSULATOR | | | |
| FB01-61-731 | 2 | | | | |
| 61-972 | | RUBBER,INSULATOR | | | |
| FA54-61-973 | 1 | | | | |
| 78-834 | | REFRIGERANT DRUM | | | |
| FC05-61-R12 | 3 | 250G | | | |

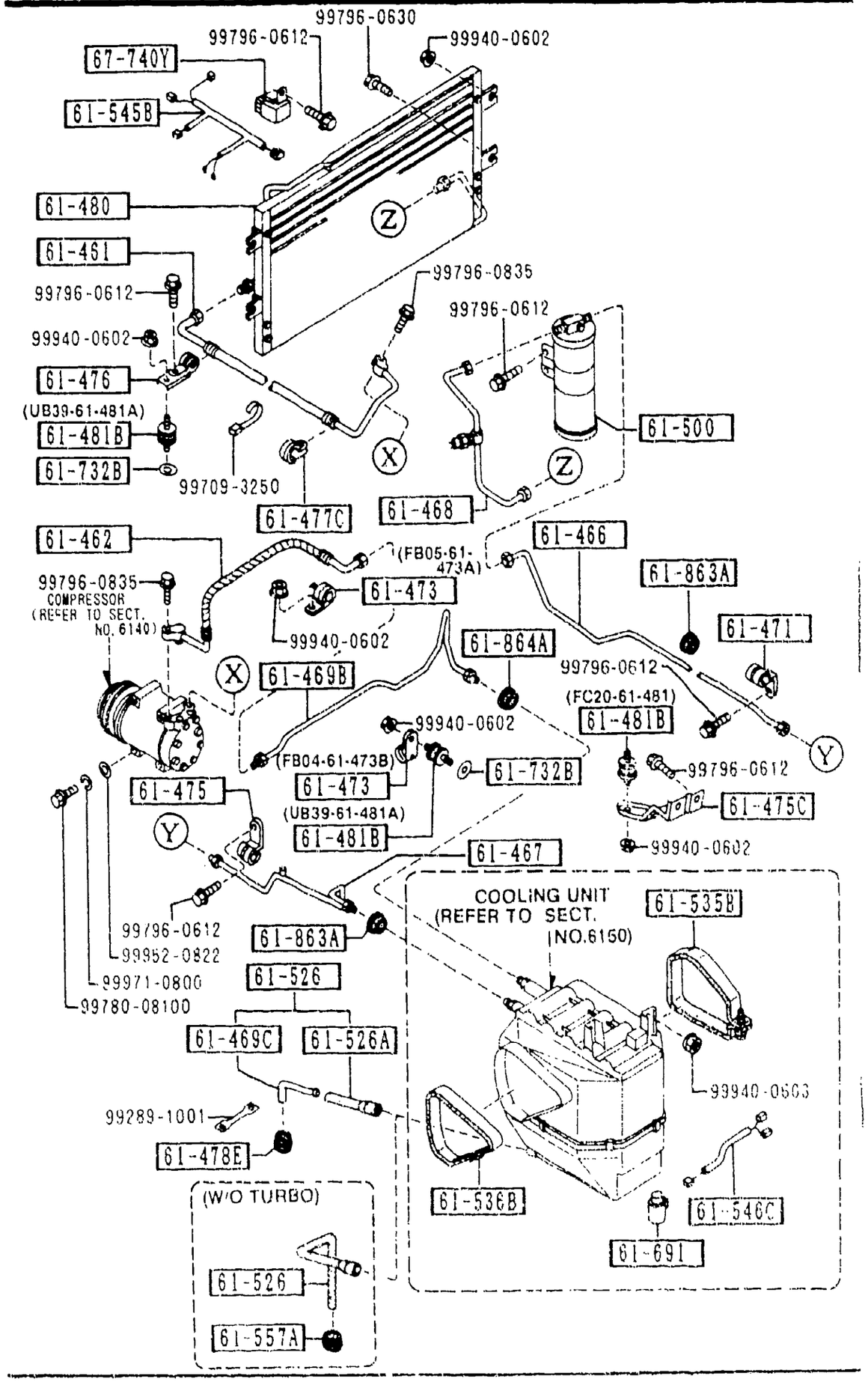


AUFA03



| PART NO. | QTY | MODEL/RESTRICTION | MODEL/RESTRICTION | MODEL/RESTRICTION | FROM-TO |
|---|---|---|---|---|---|
| 61-461 | | HOSE,FLEXIBLE-HIGH | | | |
| FC20-61-461 | 1 | (A) | | | |
| 61-462 | | HOSE,FLEXIBLE-LOW | | | |
| FC20-61-462 | 1 | (A) | | | |
| 61-466 | | PIPE NO.4,COOLER | | | |
| FB04-61-465B | 1 | (A) | | | |
| 61-467 | | PIPE NO.5,COOLER | | | |
| FB04-61-466C | 1 | (A) | | | |
| 61-468 | | PIPE NO.6,COOLER | | | |
| FB04-61-463A | 1 | (A) | | | |
| 61-469B | | PIPE NO.7,COOLER | | | |
| FB06-61-467C | 1 | (A) (TURBO) | | | |
| FC20-61-467 | 1 | (A) (W/O TURBO) | | | |
| 61-469C | | PIPE NO.8,COOLER | | | |
| UC86-61-468 | 1 | (A) (TURBO) | | | |
| 61-471 | | CLIP,PIPE | | | |
| FB04-61-471 | 1 | (A) | | | |
| 61-473 | | CLIP,PIPE | | | |
| FB04-61-473B | 1 | (A) | | | |
| FB05-61-473A | 1 | (A) | | | |
| 61-475 | | CLIP,PIPE | | | |
| FB05-61-475 | 1 | (A) | | | |
| 61-475C | | BRACKET | | | |

CAT. AUFA03-07

1993-12

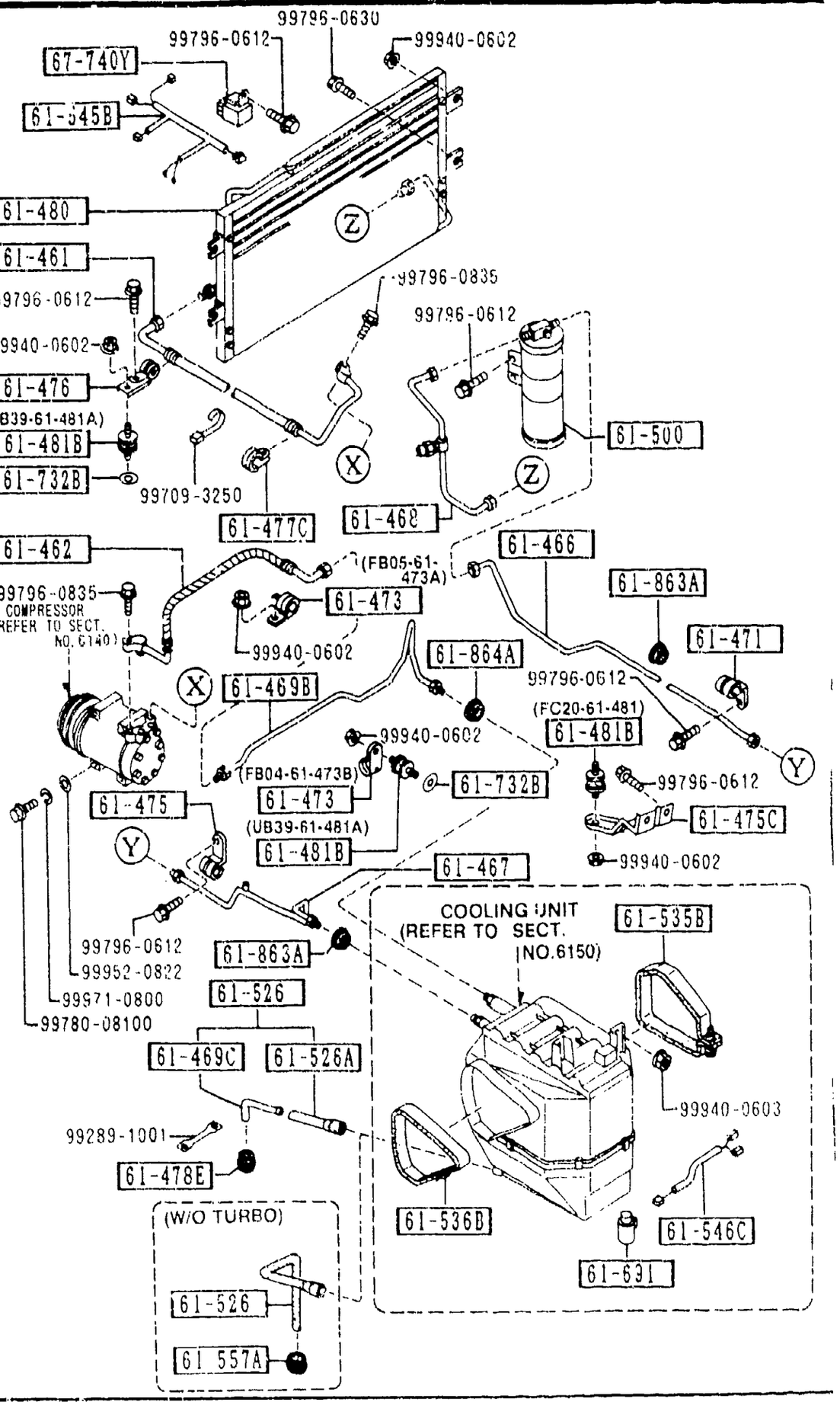




| PART NO. | QTY | MODEL/RESTRICTION | MODEL/RESTRICTION | MODEL/RESTRICTION | FROM-TO |
|---|---|---|---|---|---|
| CONT'D | | | | | |
| FB04-61-475E | 1 | (A) | | | |
| +----------+ | | | | | |
| \| 61-476 \| | | CLIP | | | |
| +----------+ | | | | | |
| FB04-61-476A | 1 | (A) | | | |
| +----------+ | | | | | |
| \| 61-477C \| | | CLIP | | | |
| +----------+ | | | | | |
| FB04-61-477 | 1 | (A) | | | |
| +----------+ | | | | | |
| \| 61-478E \| | | GROMMET,DRAIN HOSE | | | |
| +----------+ | | | | | |
| FB04-61-478A | 1 | (A)<br>(TURBO) | | | |
| +----------+ | | | | | |
| \| 61-480 \| | | CONDENSER | | | |
| +----------+ | | | | | |
| FB04-61-480E | 1 | (A) | | | |
| +----------+ | | | | | |
| \| 61-481B \| | | RUBBER,INSULATOR | | | |
| +----------+ | | | | | |
| FC20-61-481 | 1 | (A) | | | |
| UB39-61-481A | 2 | (G) | | | |
| +----------+ | | | | | |
| \| 61-500 \| | | TANK,LIQUID | | | |
| +----------+ | | | | | |
| FB04-61-500B | 1 | (A) | | | -0901 |
| FB04-61-500C | 1 | (A) | | | 0901- |
| +----------+ | | | | | |
| \| 61-526 \| | | HOSE,DRAIN | | | |
| +----------+ | | | | | |
| FB04-61-52X | 1 | (A)<br>(TURBO) | | | |
| FB05-61-526 | 1 | (A)<br>(W/O TURBO) | | | |
| +----------+ | | | | | |
| \| 61-526A \| | | HOSE,DRAIN | | | |
| +----------+ | | | | | |
| FB04-61-526A | 1 | (A)<br>(TURBO) | | | |
| +----------+ | | | | | |
| \| 61-535B \| | | PLATE NO.1,SEAL | | | |
| +----------+ | | | | | |
| FB04-61-527B | 1 | (A) | | | |

0901 FC3***-901310

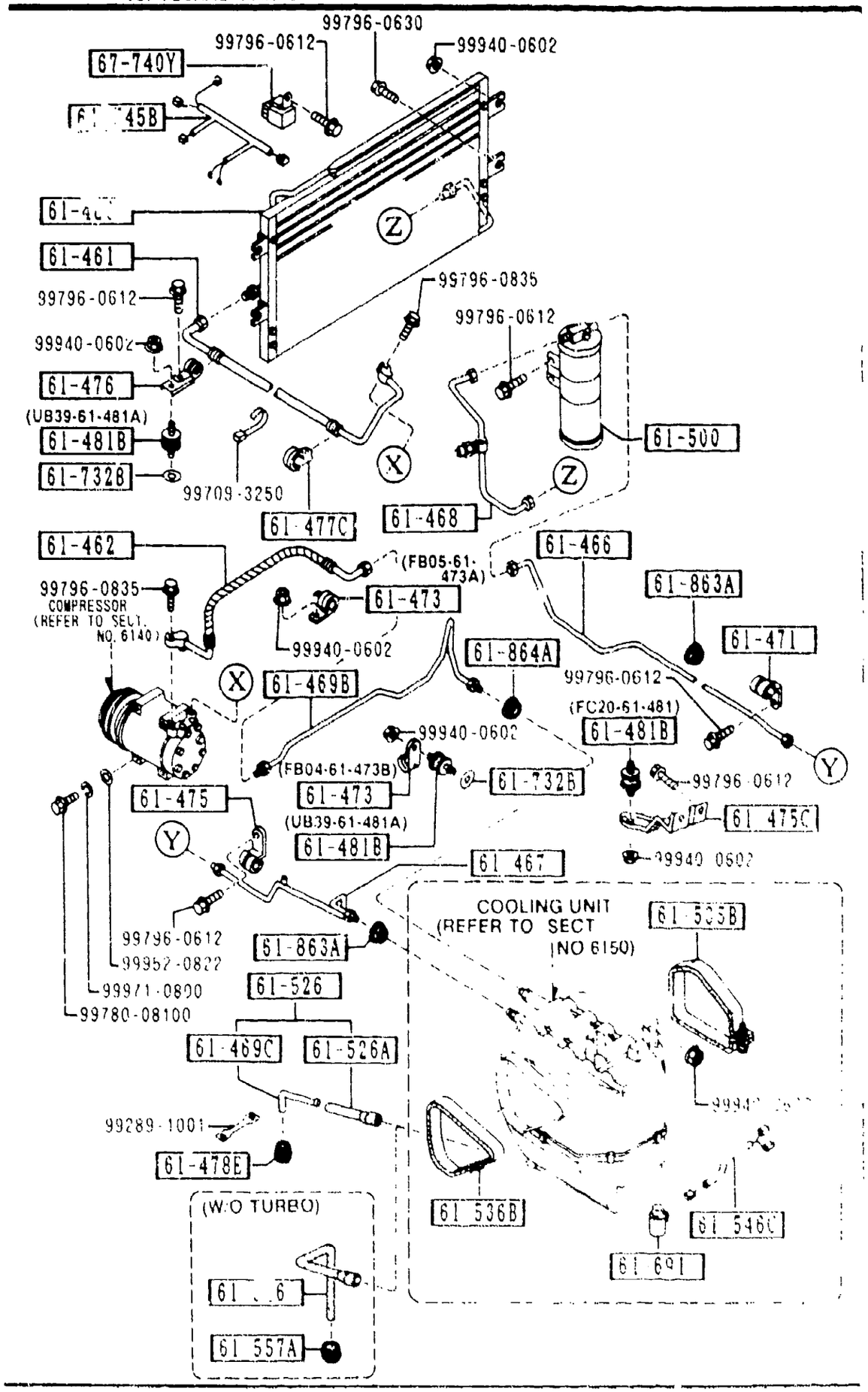


6130A -3 * AIR CONDITIONER
(OPTIONAL PARTS)

| PART NO. | QTY | MODEL/RESTRICTION | MODEL/RESTRICTION | MODEL/RESTRICTION | FROM-TO |
|---|---|---|---|---|---|
| 61-536B<br>FB04-61-528 | 1 | PLATE NO.2.SEAL<br>(A) | | | |
| 61-545B<br>FC20-61-545 | 1 | HARNESS,WIRE<br>(A) | | | |
| 61-546C<br>FB04-61-546A | 1 | HARNESS,WIRE<br>(A) | | | |
| 61-557A<br>FB04-61-557 | 1 | GROMMET<br>(A) | | | |
| 61-691<br>FB01-61-691 | 1 | RELAY | | | |
| 51-732B<br>FB04-61-732 | 2 | WASHER<br>(A) | | | |
| 61-863A<br>FA38-61-883 | 2 | GROMMET<br>(A) | | | |
| 61-864A<br>FA38-61-884 | 1 | GROMMET<br>(A) | | | |
| 67-740Y<br>H430-67-740 | 1 | RELAY & COVER,NORMAL<br>OPEN | | | |