Parts Catalog

Mazda RX-7
U.S.A.
('91► '92)

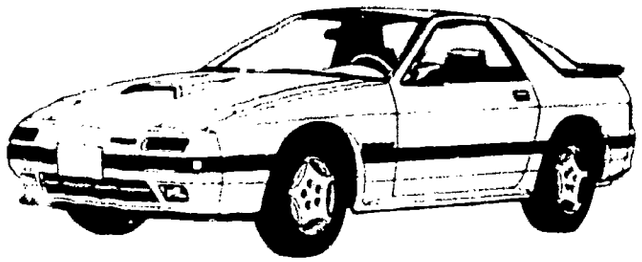

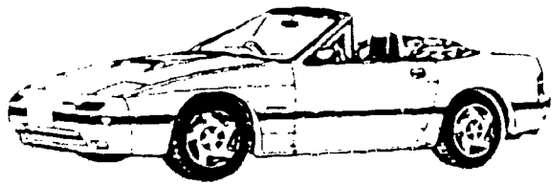

FC3 • • • -900001~950000
FC35 • _-100001~200000

Jan.'94 (FINAL)

Catalog No. AU-FA03-07

· 1994 Mazda Motor Corporation

LAYOUT OF CONTENTS / DISPOSITION TYPOGRAPHIQUE DE CONTENU / DISPOSICION DEL CONTENIDO / ANORDNUNG DES INHALTS

- The following is a typical example of the layout of contents on Mazda microfiche parts catalog
- Voici un exemple typique de la disposition typographique de contenu dans les microfiches de catalogue des pièces de Mazda
- El siguiente es un ejemplo típico de la disposición del contenido en una microficha del catalogo de repuestos de Mazda
- Folgendes ist ein typisches Beispiel der Inhaltsanordnung des Mazda Mikrofiche Teilekataloqs

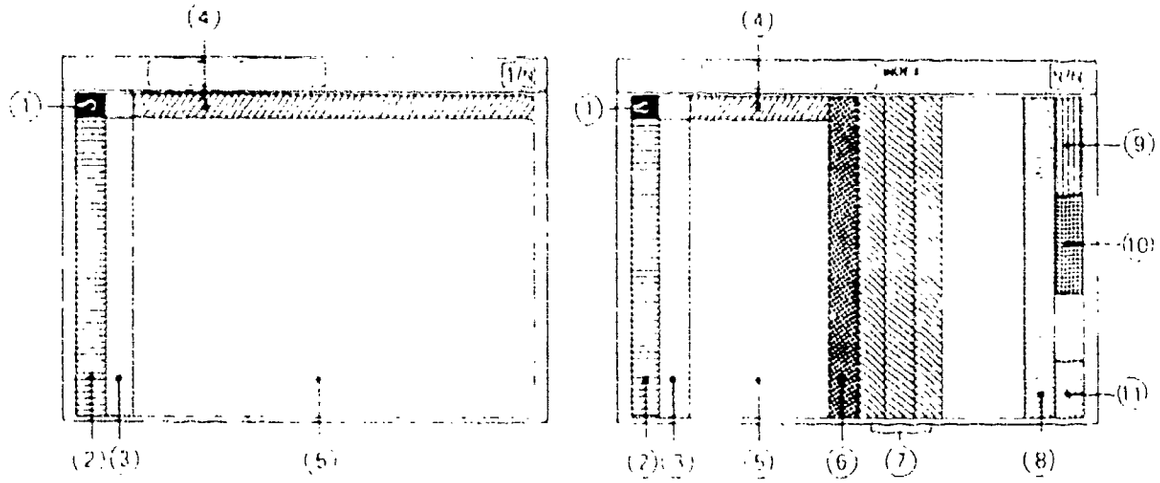

Remark : The items listed under ④ have been deleted from each fiche since Dec. '93

① · Layout of contents
· Disposition Typographique de Contenu
· Disposición del contenido
· Anordnung des Inhalts

② · Pictorial Index
· Index par Schémas
· Indice Gráfico
· Illustrierter Index

③ · Master Section No. Index
· Index des Numéros des Sections Totale
· Indice del Número de la Sección Maéstra
· Hauptabschnittsnummer Index

~~④ · Section No. Index for the Column~~
~~· Index des Numéros des Sections pour les Colonnes~~
~~· N° de la Section para el Indice~~
~~· Abschnittsnummer-Index für die Spalte~~

⑤ · Illustration & Text
· Illustrations et Textes
· Ilustración y Texto
· Abbildung und Text

⑥ · Part No. Index
· Index des Numéros des Pièces
· Indice del N° de Pieza
· Teile-Nr.-Index

⑦ · Alphabetical Index
· Index Alphabétique
· Indice Alfabético
· Alphabetischer Index

⑧ · Model Identification
· Identification des Modèles
· Identificación del Modelo
· Modell-Kennzeichnung

⑨ · Vehicle Identification System
· Système d'Identification de Véhicule
· Sistema de Identificación de Vehículo
· Fahrzeug-Identifikations system

PICTORIAL INDEX

ENGINE (1/2)

1000



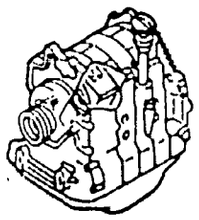

SHORT ENGINE & GASKET SETS

1 1030

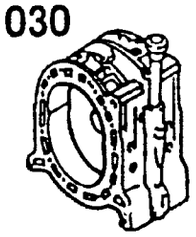

ROTOR HOUSINGS

2 1040

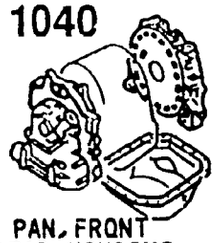

OIL PAN, FRONT & REAR HOUSING

3 1100

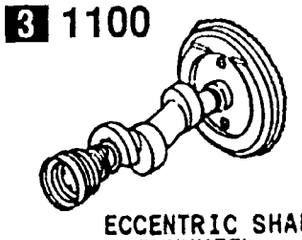

ECCENTRIC SHAFT & FLYWHEEL

4 1110



ROTORS & RELATED PARTS

5 1400

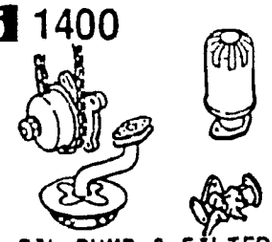

OIL PUMP & FILTER

6 1600

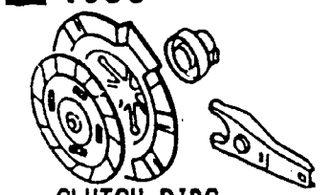

CLUTCH DISC & COVER (MANUAL)

7 1700

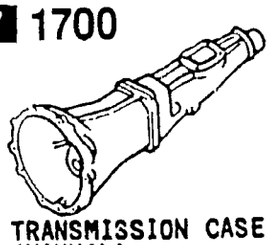

TRANSMISSION CASE (MANUAL)

8 1710

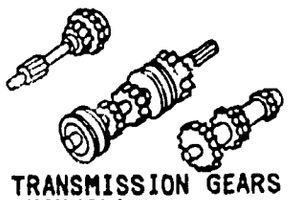

TRANSMISSION GEARS (MANUAL)

9 1720

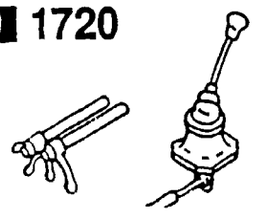

CHANGE CONTROL SYSTEM (MANUAL)

17 4600

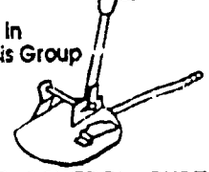

Given in Chassis Group

CHANGE CONTROL SYSTEM (AT)

16 3900

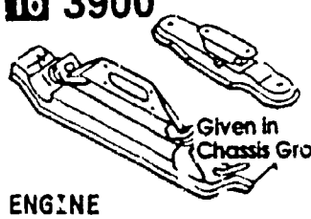

Given in Chassis Group

ENGINE & T/MISSION MOUNTINGS

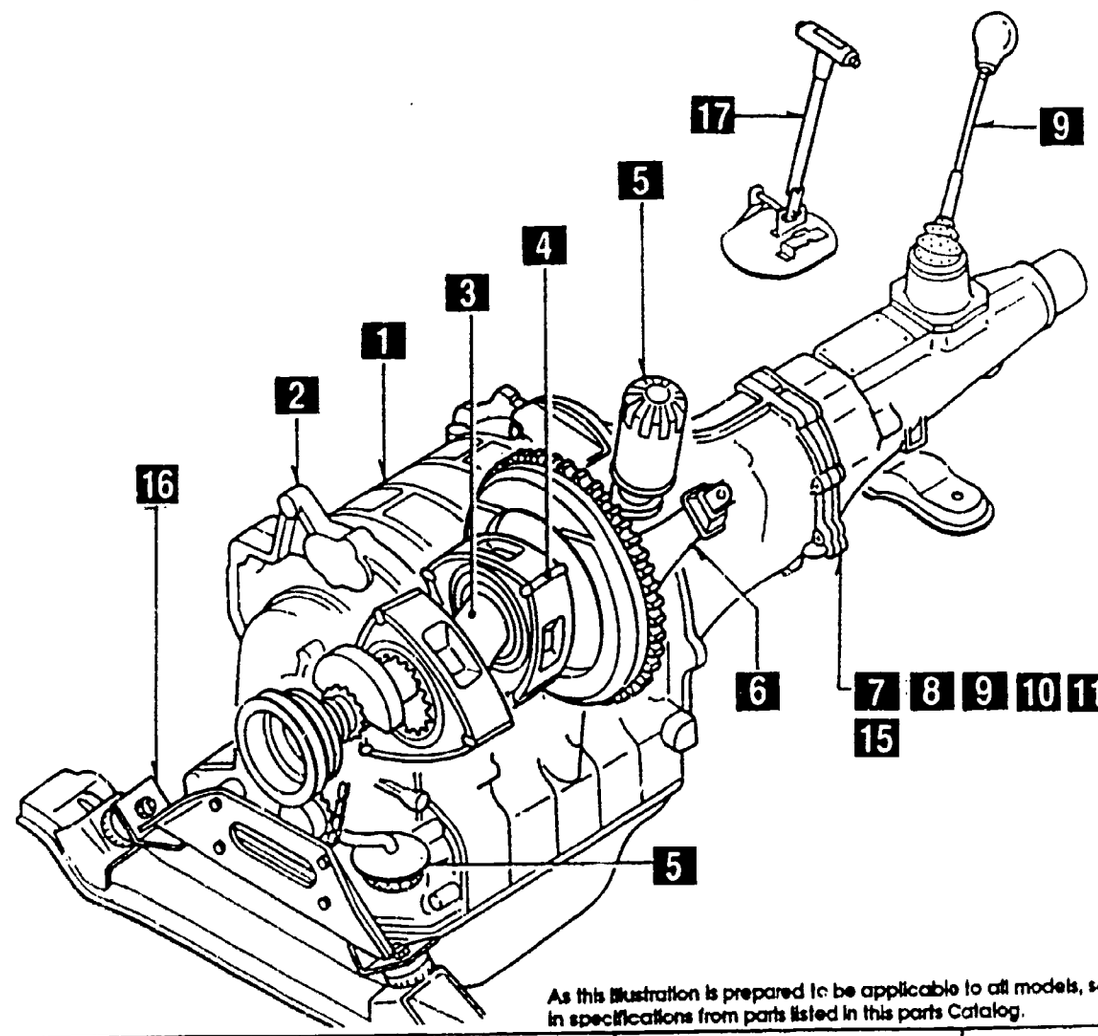

As this illustration is prepared to be applicable to all models, some parts are different in specifications from parts listed in this parts Catalog.

15 1960

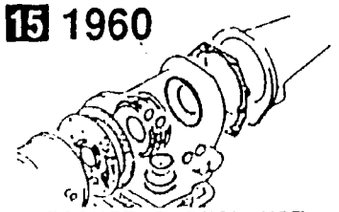

GASKET & SEAL KIT (AUTOMATIC)

14 1950

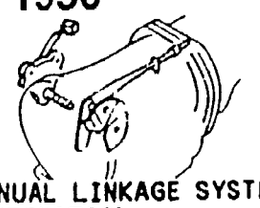

MANUAL LINKAGE SYSTEM (AUTOMATIC)

13 1940

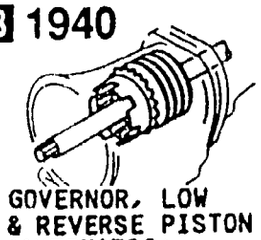

GOVERNOR, LOW & REVERSE PISTON (AUTOMATIC)

12 1930

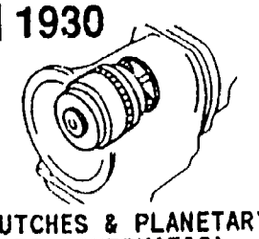

CLUTCHES & PLANETARY GEARS (AUTOMATIC)

11 1920 & 1925

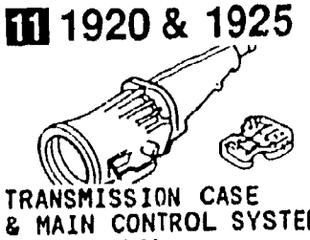

TRANSMISSION CASE & MAIN CONTROL SYSTEM (AUTOMATIC)

10 1910

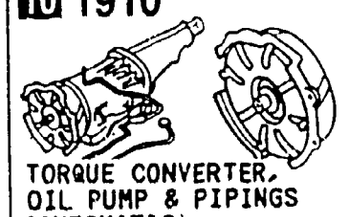

TORQUE CONVERTER, OIL PUMP & PIPINGS (AUTOMATIC)

PICTORIAL INDEX

ENGINE (2/2)

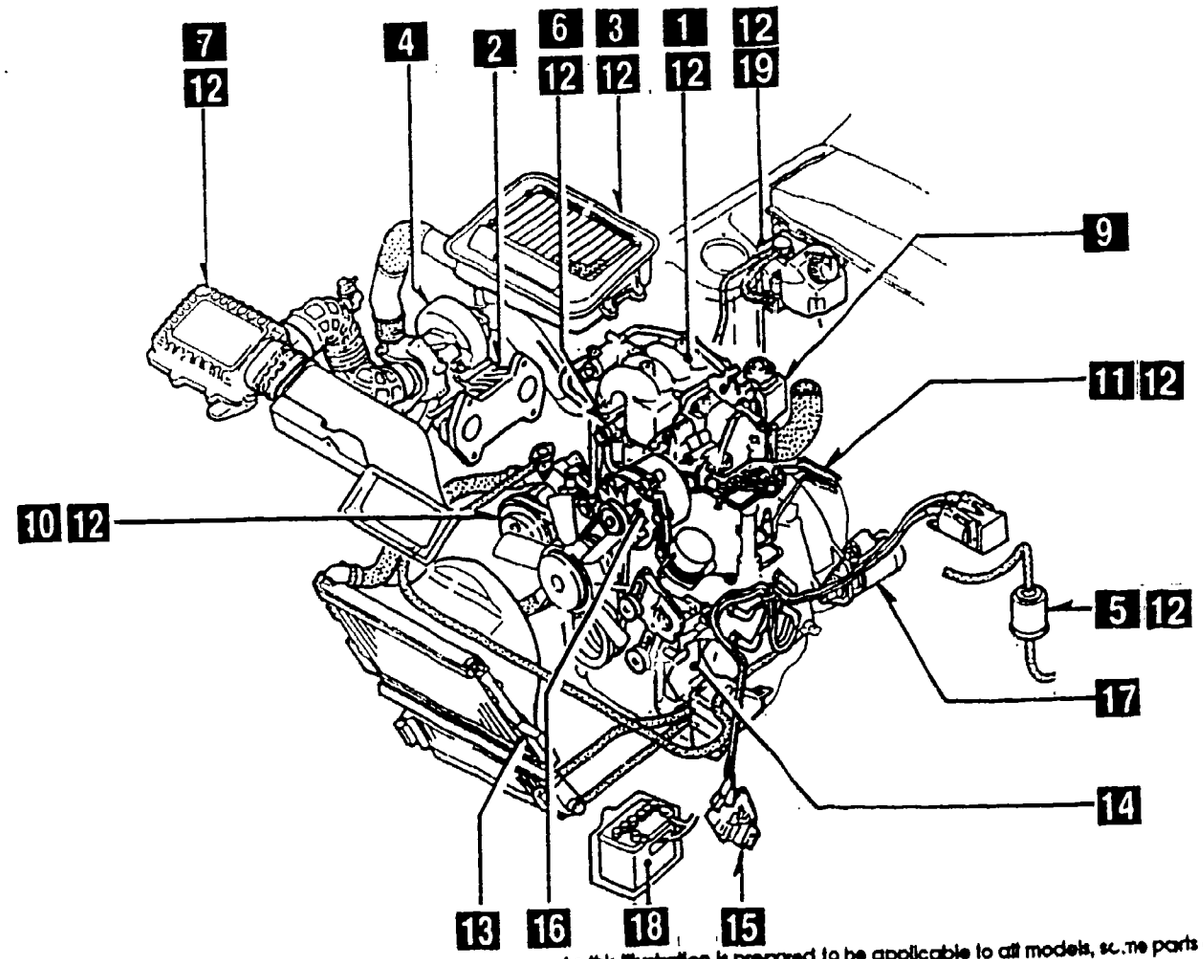

As this illustration is prepared to be applicable to all models, some parts are different in specifications from parts listed in this parts Catalog.

1 1300
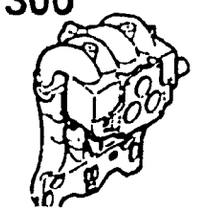
INLET MANIFOLD

2 1310
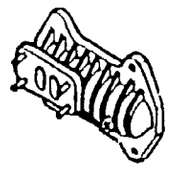
EXHAUST MANIFOLD

3 1311

INTER COOLER

4 1312
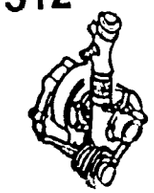
TURBO CHARGER

5 1320

FUEL SYSTEM

6 1325
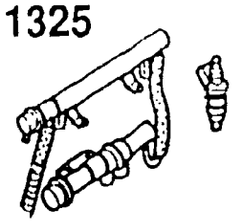
FUEL DISTRIBUTOR

7 1330
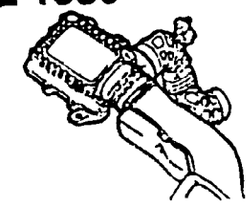
AIR CLEANER

8

9 1364
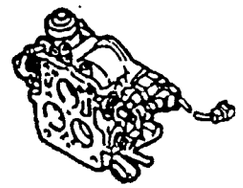
THROTTLE BODY

10 1371

AIR PUMP & AIR CONTROL VALVE

11 1380
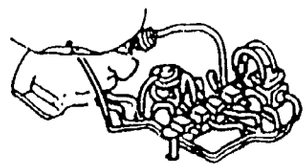
EMISSION CONTROL SYSTEM

12 1399

CAP & HOSE CLIP (INLET & EXHAUST SIDE)

13 1500
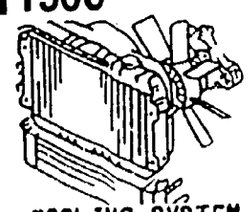
COOLING SYSTEM

14 1580
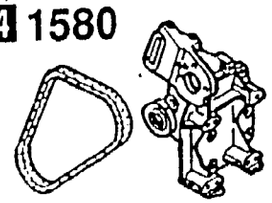
BRACKET, PULLEY & BELT

15 1800
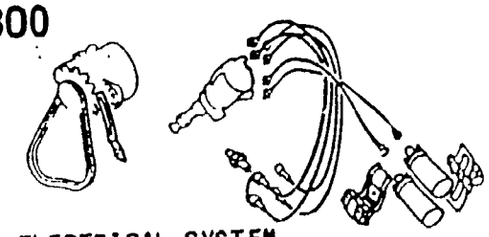
ENGINE ELECTRICAL SYSTEM

16 1830
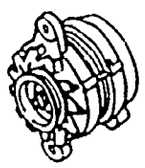
ALTERNATOR

17 1840
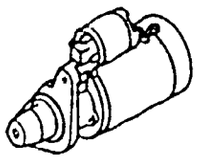
STARTER

18 1850
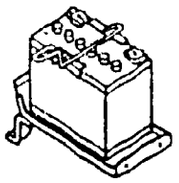
BATTERY

19 1350
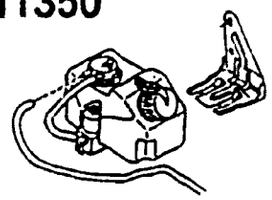
STARTING ASSIST SYSTEM

PICTORIAL INDEX

CHASSIS (1/2)

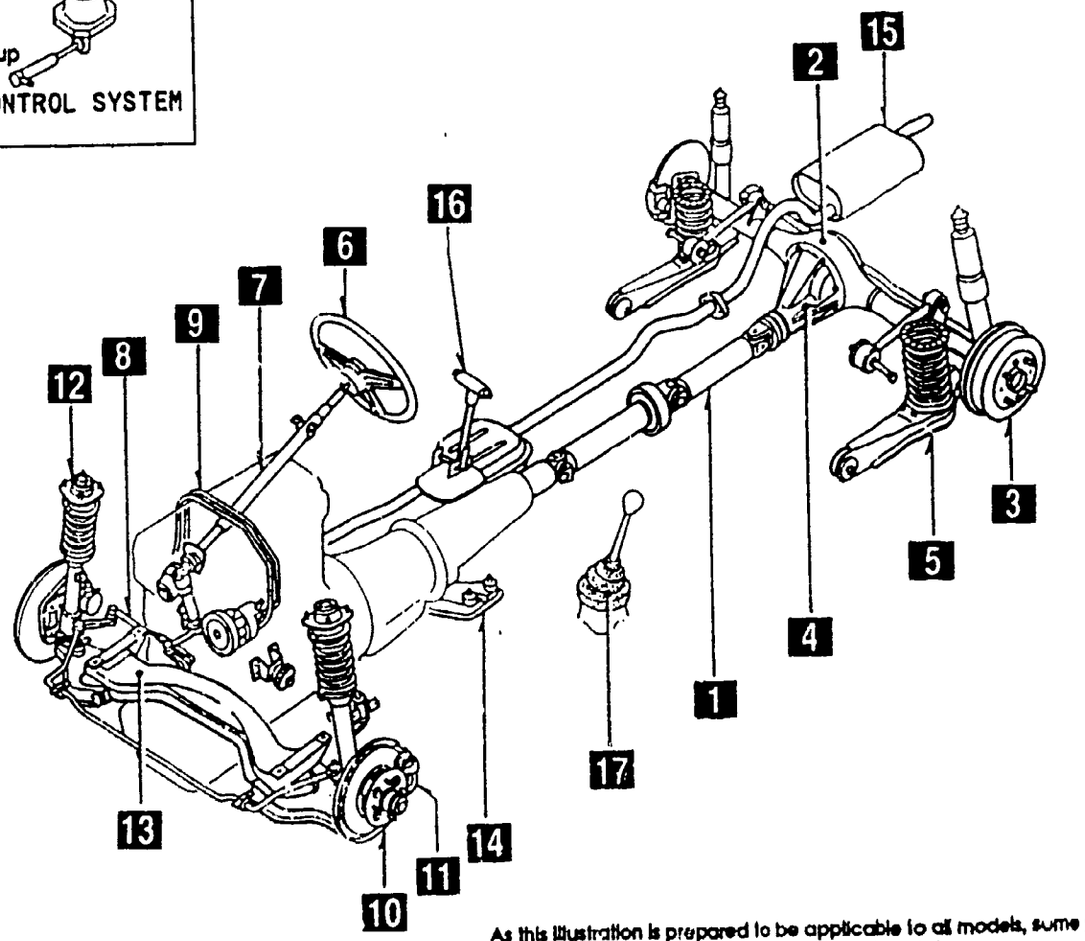

As this illustration is prepared to be applicable to all models, some parts are different in specifications from parts listed in this parts Catalog.

1 2505

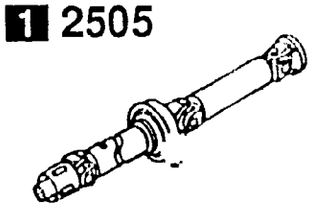

REAR PROPELLER SHAFT

2 2550

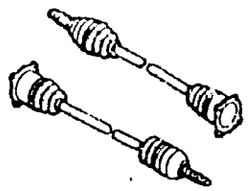

REAR DRIVE SHAFT

2600

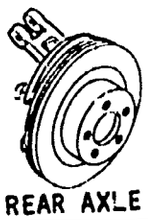

REAR AXLE

3 2610



REAR BRAKE MECHANISMS

4 2710

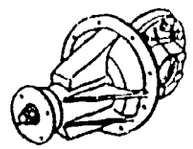

REAR DIFFERENTIALS

5 2800 & 2810

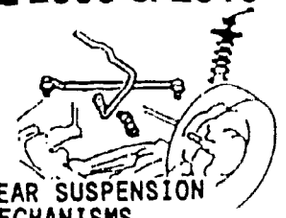

REAR SUSPENSION MECHANISMS

2801

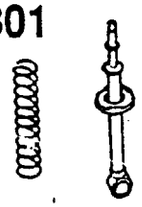

REAR SPRING & DAMPER

2830

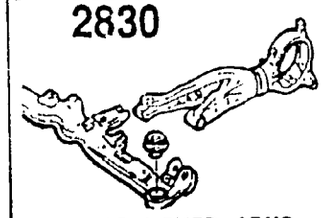

REAR LOWER ARMS & SUB FRAME

6 3200



STEERING WHEEL

7 3210



STEERING COLUMN & SHAFTS

8 3220

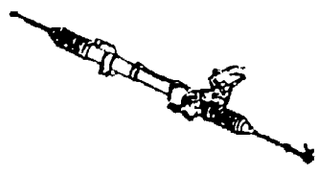

STEERING GEAR

9 3240

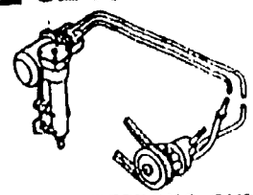

POWER STEERING SYSTEM

10 3300

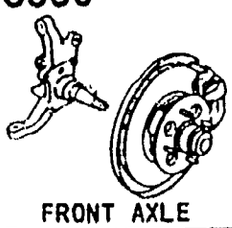

FRONT AXLE

11 3310



FRONT BRAKE MECHANISMS

3400

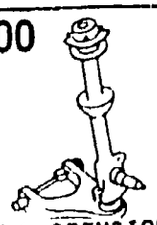

FRONT SUSPENSION MECHANISMS

12 3401

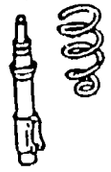

FRONT SPRING & DAMPER

13 3410

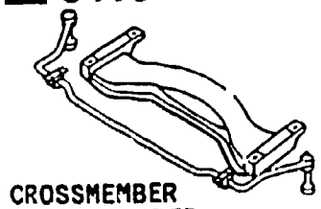

CROSSMEMBER & STABILIZER

14 3900

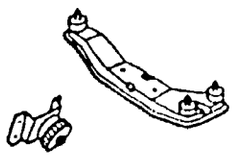

ENGINE & T/MISSION MOUNTINGS

15 4000

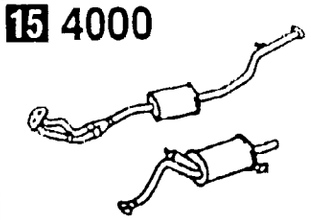

EXHAUST SYSTEM

16 4600

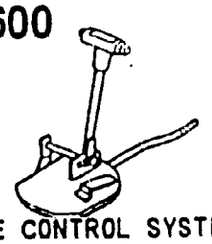

CHANGE CONTROL SYSTEM (AT)

17 1720

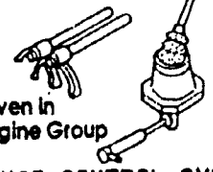

CHANGE CONTROL SYSTEM (MANUAL)

PICTORIAL INDEX

1 3700

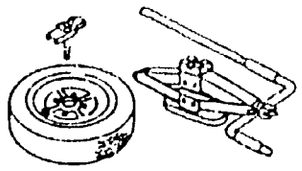

TIRES & JACK

2 4140



CLUTCH RELEASE & MASTER CYLINDERS (MANUAL TRANSMISSION)

4145

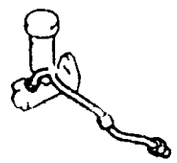

CLUTCH PIPINGS (MANUAL TRANSMISSION)

3 4160

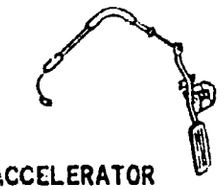

ACCELERATOR CONTROL SYSTEM

4 4200

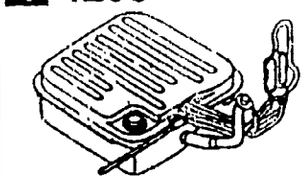

FUEL TANK

5 4300

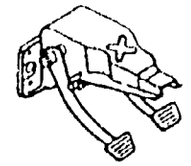

CLUTCH & BRAKE PEDALS

CHASSIS (2/2)

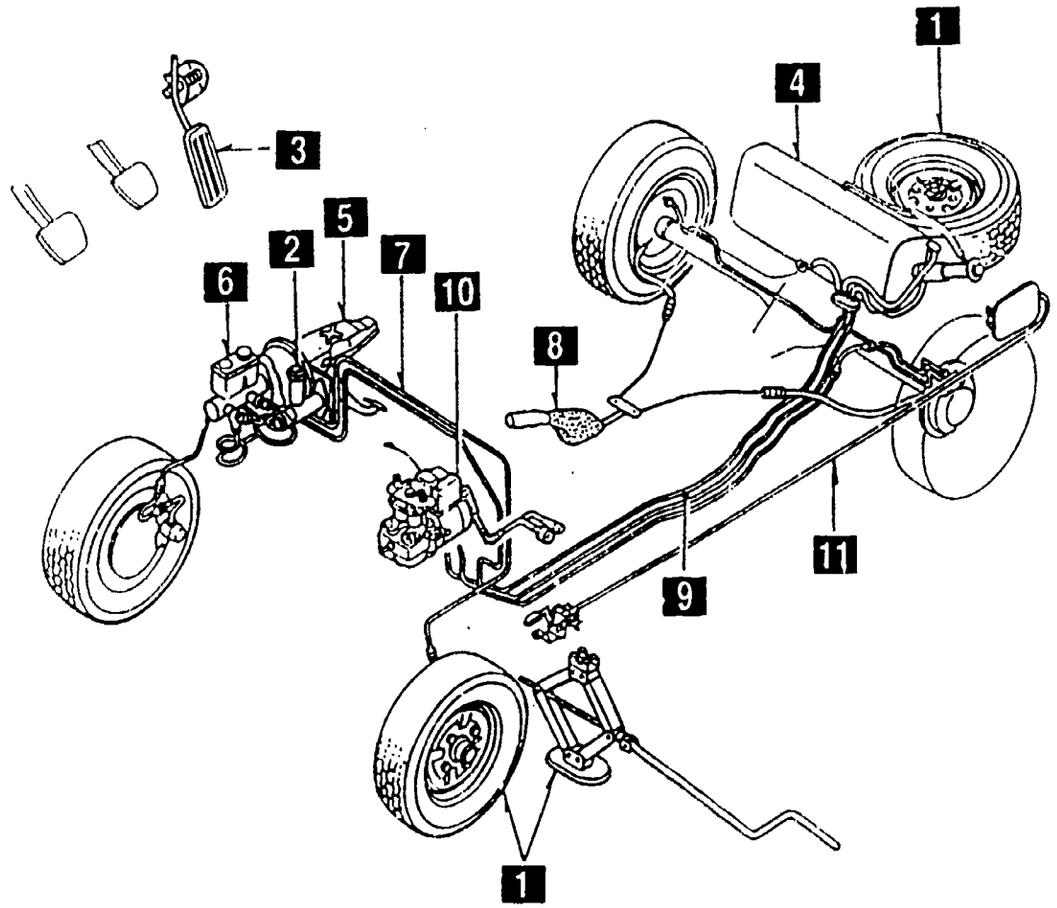

As this illustration is prepared to be applicable to all models, some parts are different in specifications from parts listed in this parts Catalog.

6 4340

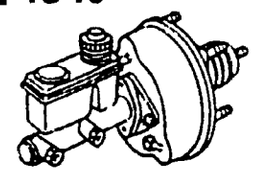

BRAKE MASTER CYLINDER & POWER BRAKE

7 4360

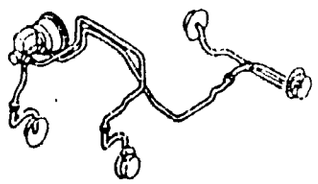

BRAKE PIPINGS

8 4400

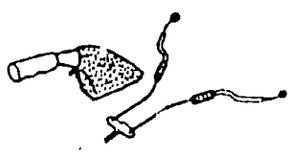

PARKING BRAKE SYSTEM

9 4500

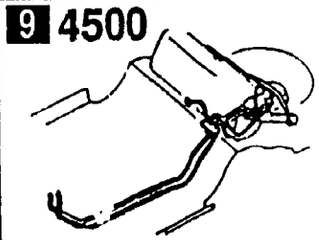

FUEL PIPINGS

11 4210

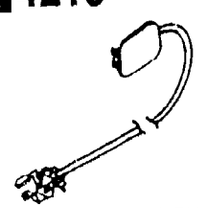

FUEL LID OPENER

10 4370

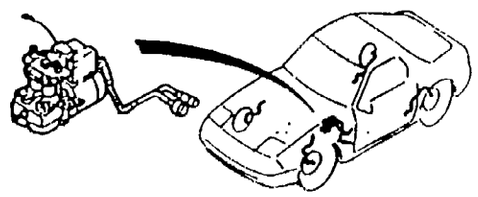

ANTILOCK BRAKE SYSTEM

PICTORIAL INDEX

1 0900
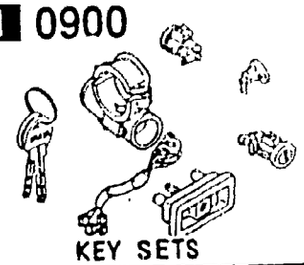
KEY SETS

2 5020
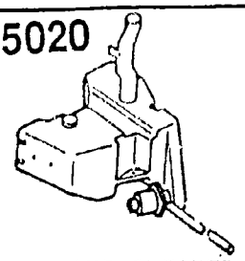
HEAD LAMP CLEANER

3 5100

HEAD LAMPS

4 5103
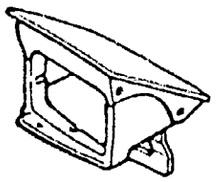
HEAD LAMP RETRACTORS

5 5105
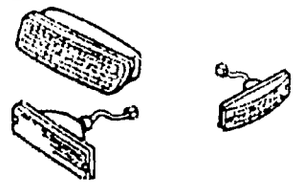
FRONT COMBINATION LAMPS

6 5110
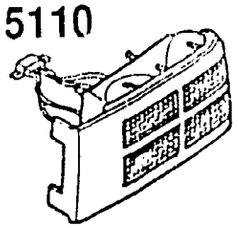
REAR COMBINATION LAMPS

19 6704
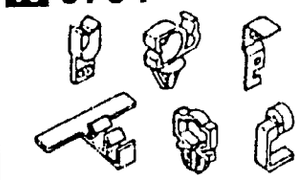
WIRING HARNESS CLAMPS

20 6720
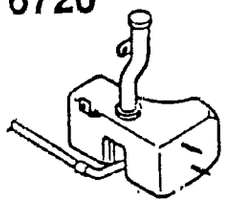
WINDSHIELD WASHER

21 6730 — 6740
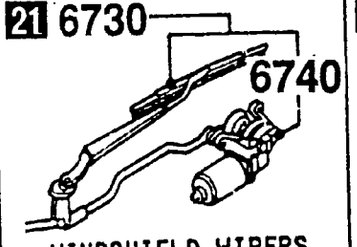
WINDSHIELD WIPERS

22 6750 — 6760
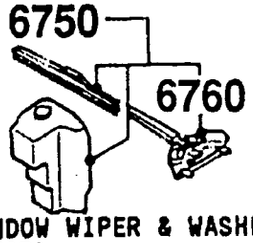
WINDOW WIPER & WASHER (REAR)

23 6800
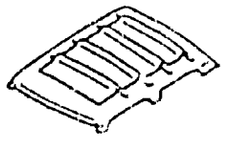
CEILING TRIMS

7 5120
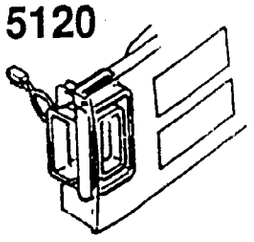
LICENSE LAMPS

18 6703
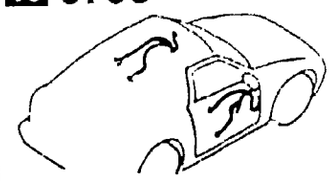
WIRING HARNESSES (DOOR, FLOOR/CEILING)

BODY (1/4)

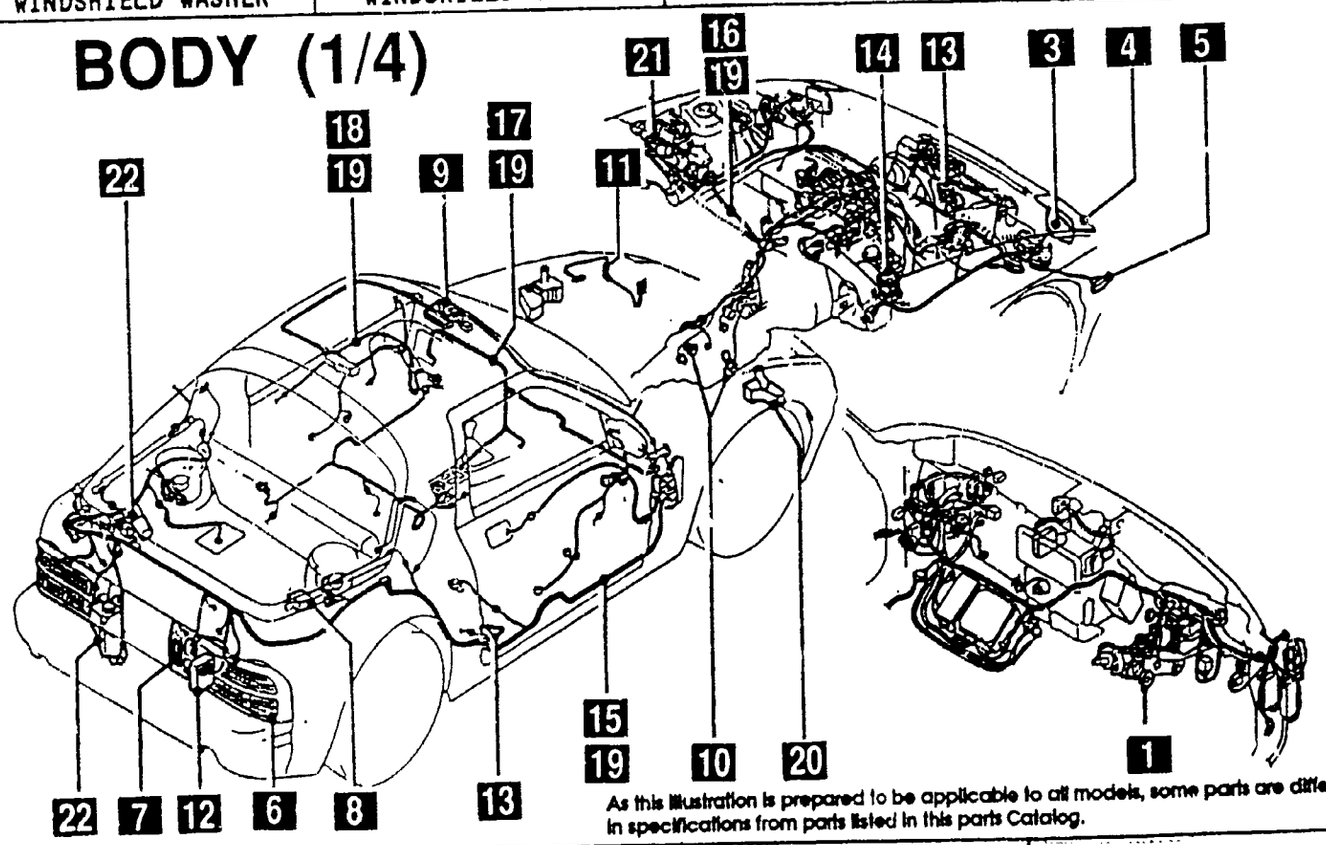

As this illustration is prepared to be applicable to all models, some parts are different in specifications from parts listed in this parts Catalog.

8 5125
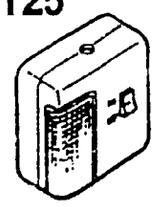
INTERIOR LAMPS

9 5130
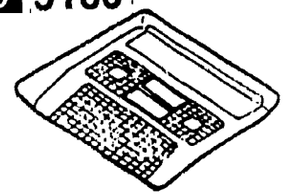
OVERHEAD CONSOLE

17 6702
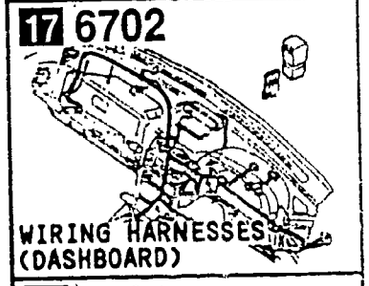
WIRING HARNESSES (DASHBOARD)

16 6701
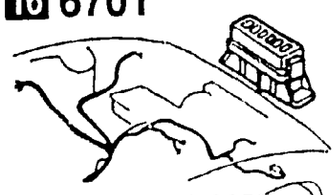
WIRING HARNESSES (ENGINE & T/MISSION)

10 6600
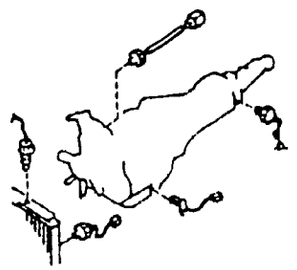
SWITCHES & RELAYS (ENGINE)

15 6700

WIRING HARNESSES (FRONT & REAR)

14 6640
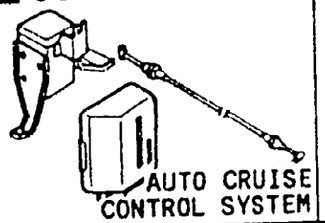
AUTO CRUISE CONTROL SYSTEM

13 6635
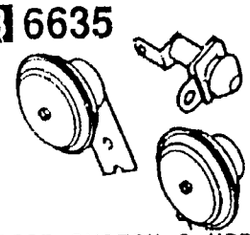
DOOR SWITCH & HORNS

12 6630
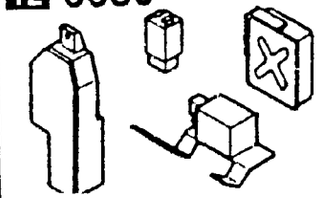
RELAYS & UNIT (BODY)

11 5795
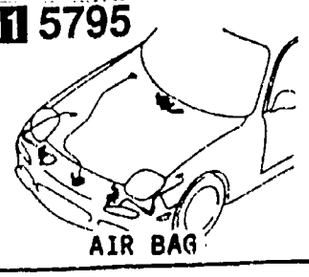
AIR BAG

PICTORIAL INDEX

BODY (2/4)

1 5000
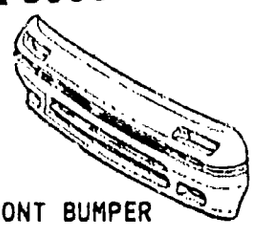
FRONT BUMPER

2 5010
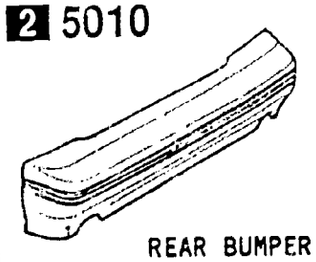
REAR BUMPER

3 5030
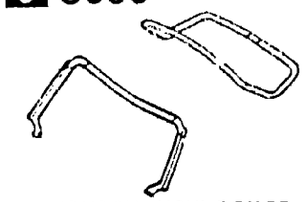
WINDOW MOULDINGS

4 5040
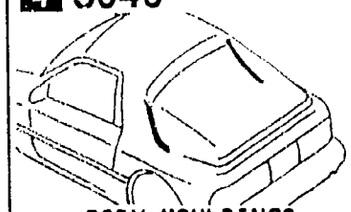
BODY MOULDINGS

5 5060
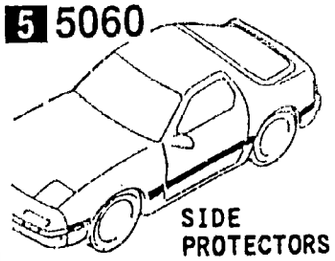
SIDE PROTECTORS

6 5170
RX-7
mazda
ORNAMENTS

7 5180
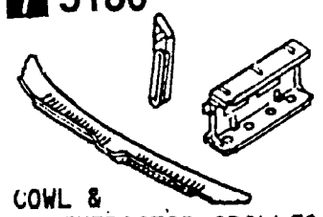
COWL & EXTRACTOR GRILLES

8 5230
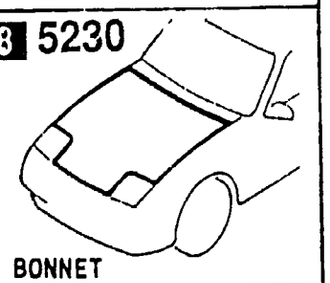
BONNET

9 5260
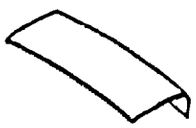
TRUNK LID

10 5310
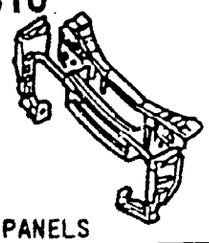
FRONT PANELS

11 5320
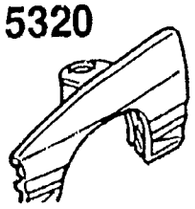
FENDER & WHEEL APRON PANELS

12 5330

DASH & COWL PANELS

13 5340
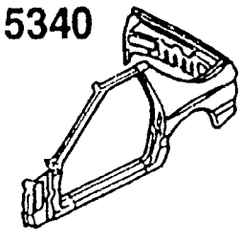
SIDE PANELS

14 5360
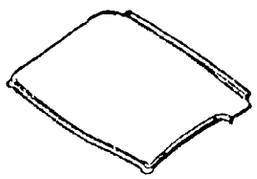
ROOF PANELS

15 5370
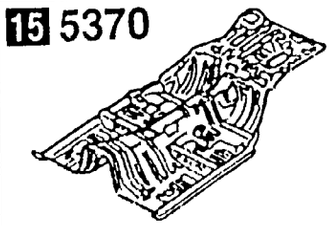
FLOOR PANELS

16 5390
5380

FLOOR ATTACHMENTS

17 5800
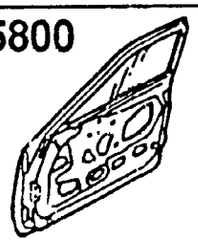
FRONT DOORS

18 5830

FRONT DOOR MECHANISMS

19 5840
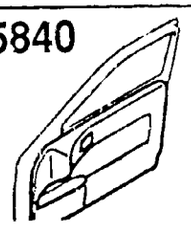
FRONT DOOR TRIMS & RELATED PARTS

20 6230
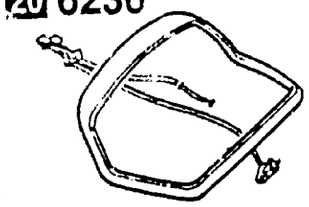
LIFT GATE MECHANISMS

21 6300
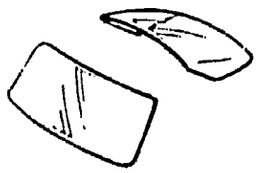
WINDOW GLASSES

22 6330
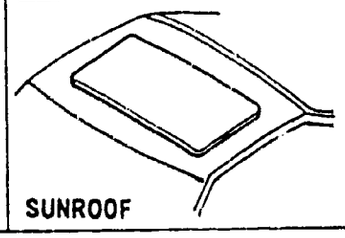
SUNROOF

23 7800
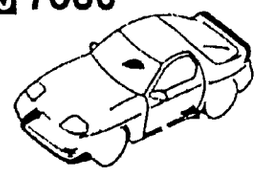
SPOILERS & RELATED PARTS

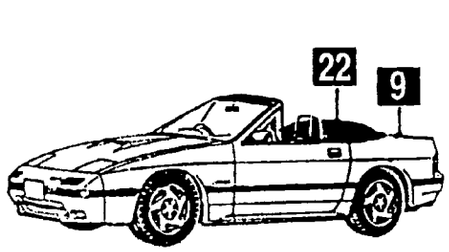

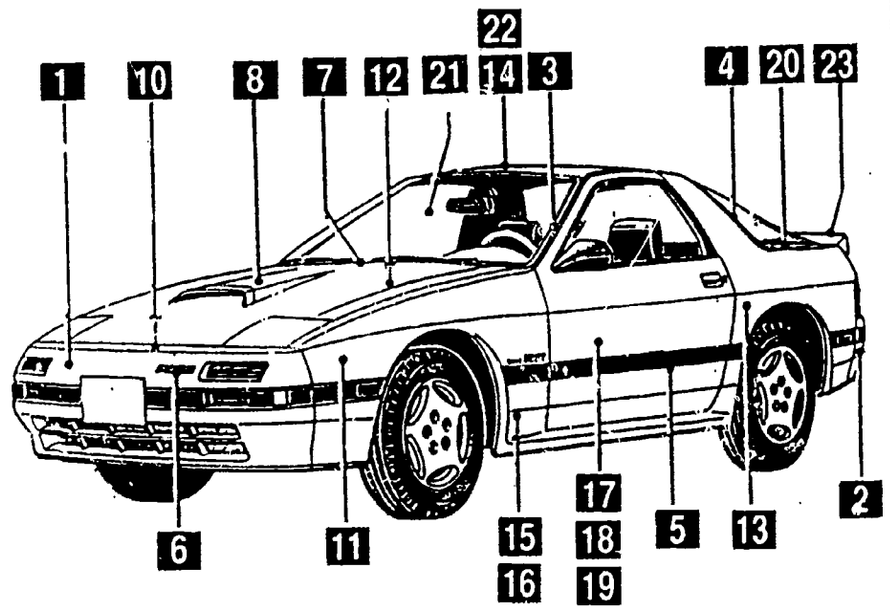

PICTORIAL INDEX

1 5500

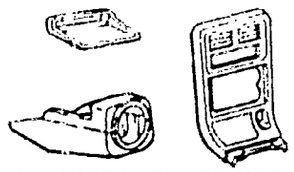

DASHBOARD EQUIPMENTS

2 5520

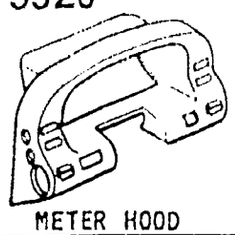

METER HOOD

3 5530

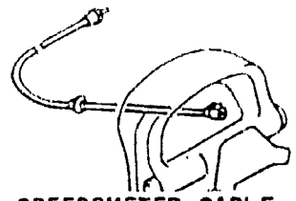

SPEEDOMETER CABLE

4 5540

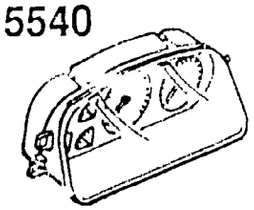

METER SET & METER COMPONENTS

5 5560

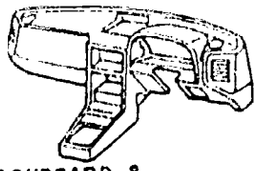

DASHBOARD & RELATED PARTS

6 5570

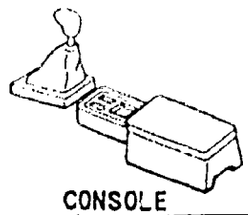

CONSOLE

BODY (3/4)

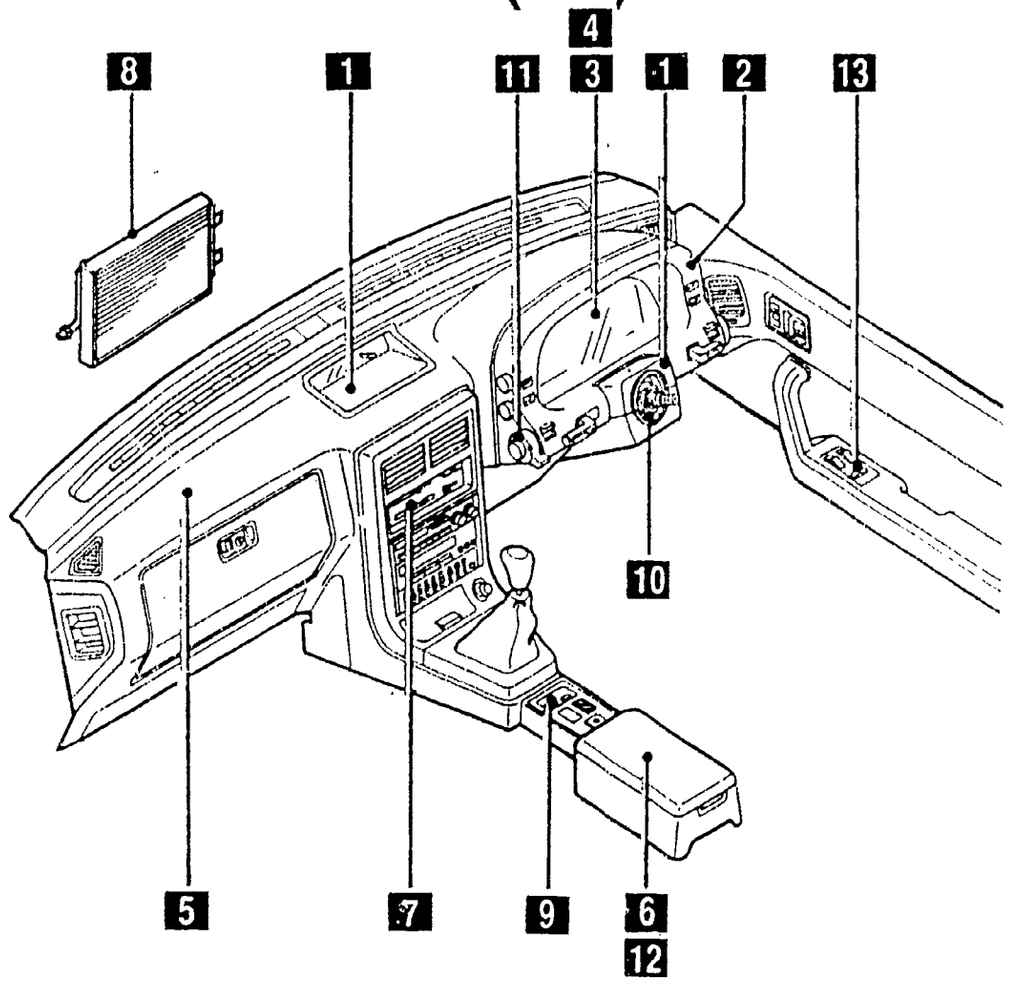

As this illustration is prepared to be applicable to all models, some parts are different in specifications from the parts listed in this parts catalog.

7

6120

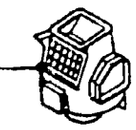

6100

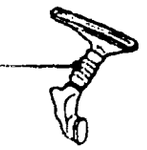

6110

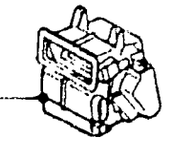

6115



HEATER

8

6130

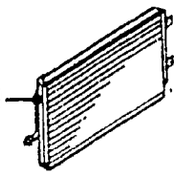

6130

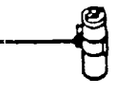

6140



6135

6150

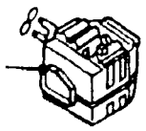

AIR CONDITIONER

13 6615

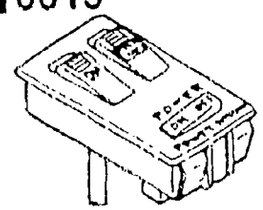

POWER WINDOW SWITCHES

12 7900

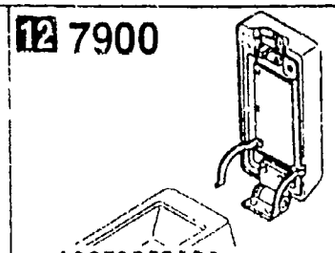

ACCESSORIES

11 6612

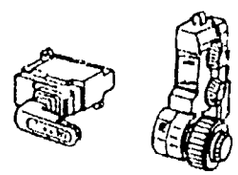

CLUSTER SWITCH

10 6611

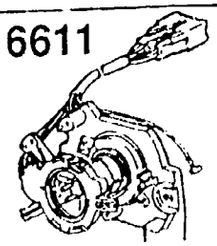

COMBINATION SWITCH

9 6610

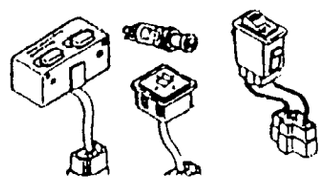

DASHBOARD SWITCHES

PICTORIAL INDEX

1 5580

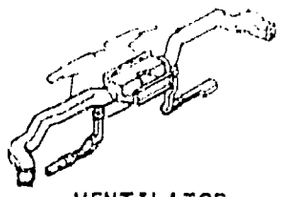

VENTILATOR

2 5700

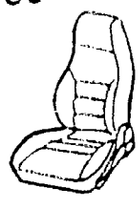

SEATS

3 5790

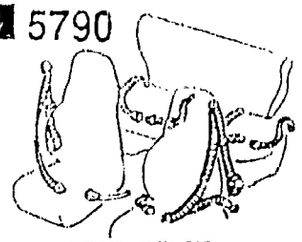

SEAT BELTS

4 6680

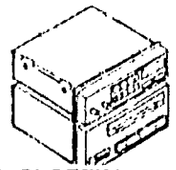

AUDIO SYSTEMS (RADIO & TAPE DECK)

5 6682

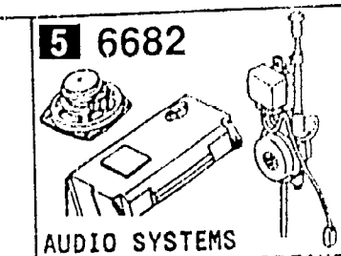

AUDIO SYSTEMS (ANTENNA & SPEAKER)

6 6820

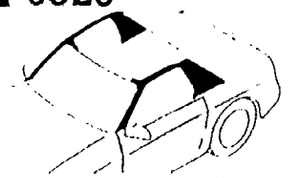

FRONT HEADER TRIM & PILLAR TRIMS

BODY (4/4)

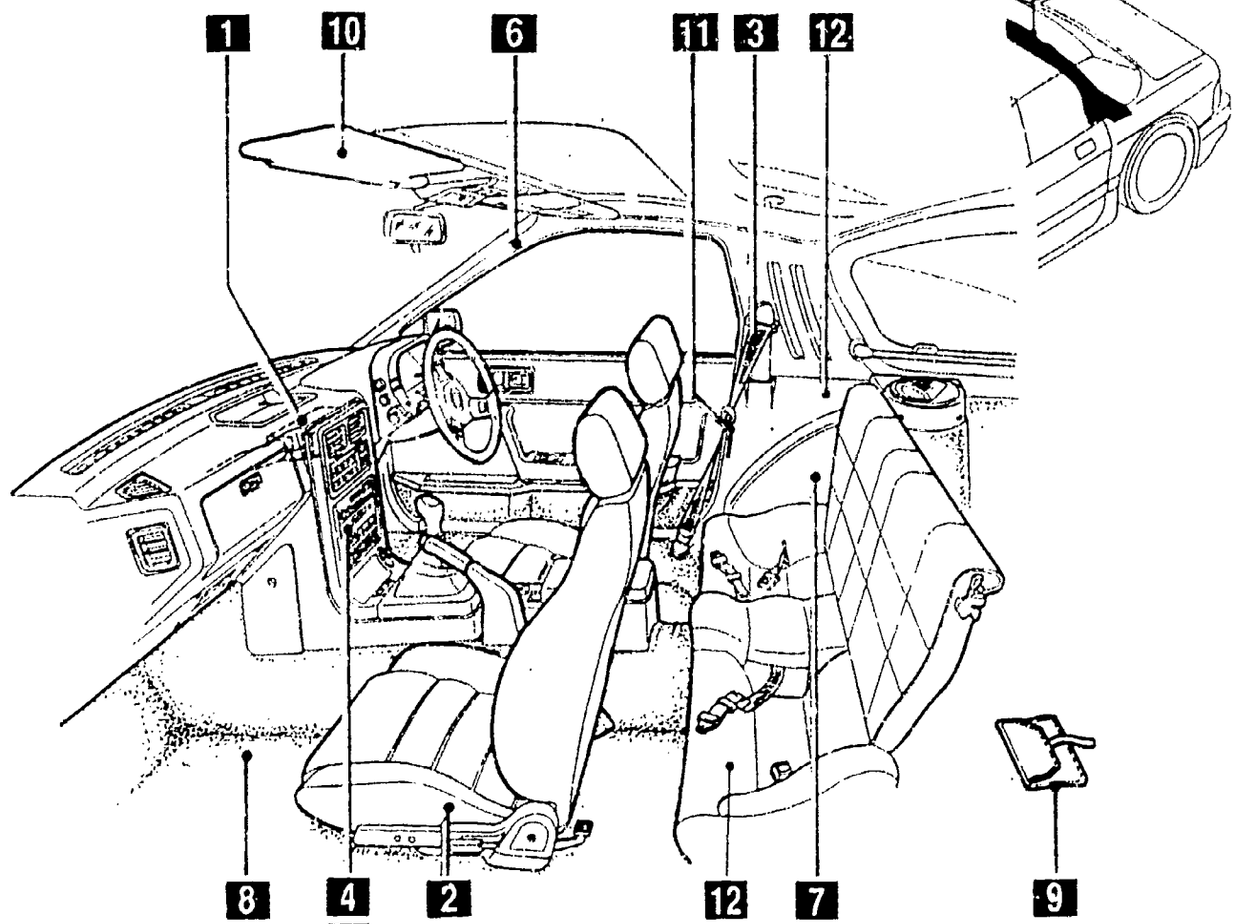

As this illustration is prepared to be applicable to all models, some parts are different in specifications from the parts listed in this parts catalog.

7 6840

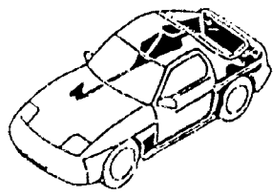

TRIMS & SCUFF PLATES

8 6860

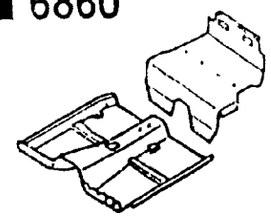

FLOOR MATS & PADS

9 6870

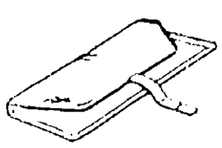

SERVICE TOOLS

10 6900

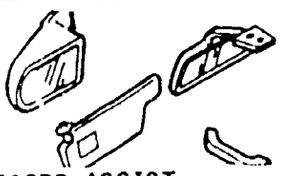

VISORS, ASSIST HANDLES & MIRRORS

11 6930

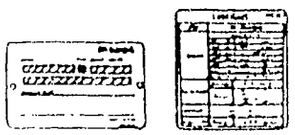

CAUTION PLATES & LABELS

12 7250



QUARTER WINDOW & TRIMS

13 6684

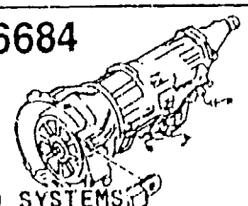

AUDIO SYSTEMS (NOISE SUPPRESSOR & EARTH CORD)

14 6810



ROLLEBAR

15 6845

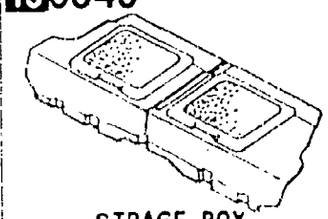

STRAGE BOX

SECTION NAME INDEX (ENGINE)

LO.NO	SEC.NO	SECTION NAME
1-C03	1000	ENGINE & GASKET SETS (W/O TURBO)
1-D03	1000 A	ENGINE & GASKET SETS (TURBO)
1-E03	1030	ROTOR HOUSINGS (W/O TURBO)
1-G03	1030 A	ROTOR HOUSINGS (TURBO)
1-I03	1040	OIL PAN,FRONT & REAR HOUSING (W/O TURBO)
1-L03	1040 A	OIL PAN,FRONT & REAR HOUSING (TURBO)
1-C04	1100	ECCENTRIC SHAFT & FLYWHEEL
1-F04	1110	ROTORS & RELATED PARTS
1-H04	1300	INLET MANIFOLD (W/O TURBO)
1-J04	1300 A	INLET MANIFOLD (TURBO)
1-K04	1310	EXHAUST MANIFOLD
1-L04	1311	INTER COOLER (TURBO)
1-M04	1312	TURBO CHARGER
1-C05	1320	FUEL SYSTEM
1-E05	1325	FUEL DISTRIBUTOR
1-F05	1330	AIR CLEANER (W/O TURBO)
1-H05	1330 A	AIR CLEANER (TURBO)
1-J05	1364	THROTTLE BODY (W/O TURBO)
1-M05	1364 A	THROTTLE BODY (TURBO)
1-C06	1371	AIR PUMP & AIR CONTROL VALVE
1-F06	1380	EMISSION CONTROL SYSTEM (W/O TURBO)
1-J06	1380 A	EMISSION CONTROL SYSTEM (TURBO)
1-C07	1400	OIL PUMP & FILTER (W/O TURBO)
1-F07	1400 A	OIL PUMP & FILTER (TURBO)
1-J07	1500	COOLING SYSTEM
1-C08	1580	BRACKET,PULLEY & BELT
1-C09	1600	CLUTCH DISC & COVER (MANUAL) (W/O TURBO)
1-D09	1600 A	CLUTCH DISC & COVER (MANUAL) (TURBO)
1-F09	1700	TRANSMISSION CASE (MANUAL) (W/O TURBO)
1-H09	1700 A	TRANSMISSION CASE (MANUAL) (TURBO)
1-K09	1710	TRANSMISSION GEARS(MANUAL) (W/O TURBO)
1-E10	1710 A	TRANSMISSION GEARS(MANUAL) (TURBO)
1-K10	1720	CHANGE CONTROL SYSTEM (MANUAL) (W/O TURBO)
1-N10	1720 A	CHANGE CONTROL SYSTEM (MANUAL) (TURBO)
1-E11	1800	ENGINE ELECTRICAL SYSTEM
1-I11	1830	ALTERNATOR
1-K11	1840	STARTER
1-N11	1850	BATTERY
1-C12	1910	TORQUE CONVERTER,OIL PUMP & PIPINGS (AUTOMATIC)
1-F12	1920	TRANSMISSION CASE & MAIN CONTROL SYSTEM (AUTOMATIC)
1-M12	1925	CONTROL VALVE (AUTOMATIC)
1-H13	1930	CLUTCHES & PLANETARY GEARS (AUTOMATIC)
1-D14	1940	GOVERNOR, LOW & REVERSE PISTON (AUTOMATIC)
1-G14	1950	MANUAL LINKAGE SYSTEM (AUTOMATIC)
1-I14	1960	GASKET & SEAL KIT (AUTOMATIC)

SECTION NAME INDEX (CHASSIS)

LO.NO	SEC.NO	SECTION NAME	LO.NO	SEC.NO	SECTION NAME	LO.NO	SEC.NO	SECTION NAME
2-C03	2505	REAR PROPELLER SHAFT	2-C08	4160	ACCELERATOR CONTROL SYSTEM			
2-D03	2550	REAR DRIVE SHAFT	2-D08	4200	FUEL TANK			
2-E03	2600	REAR AXLE	2-G08	4210	FUEL LID OPENER			
2-G03	2610	REAR BRAKE MECHANISMS	2-H08	4300	CLUTCH & BRAKE PEDALS (MANUAL TRANSMISSION)			
2-J03	2710	REAR DIFFERENTIALS (NORMAL DIFF.)	2-K08	4300A	BRAKE PEDALS (AUTOMATIC TRANSMISSION)			
2-N03	2710 A	REAR DIFFERENTIALS (LIMITED SLIP DIFF.)	2-M08	4340	BRAKE MASTER CYLINDER & POWER BRAKE (W/O TURBO)			
2-F04	2800	REAR SUSPENSION MECHANISMS						
2-G04	2801	REAR SPRING & DAMPER	2-C09	4340 A	BRAKE MASTER CYLINDER & POWER BRAKE (TURBO)			
2-H04	2810	REAR STABILIZER						
2-I04	2830	REAR LOWER ARMS & SUB FRAME	2-E09	4360	BRAKE PIPINGS (W/O TURBO)			
2-K04	3200	STEERING WHEEL (W/O AIR BAG)	2-G09	4360 A	BRAKE PIPINGS (TURBO)			
2-M04	3200 A	STEERING WHEEL (W/ AIR BAG)	2-I09	4370	ANTILOCK BRAKE SYSTEM			
2-N04	3210	STEERING COLUMN & SHAFTS	2-M09	4400	PARKING BRAKE SYSTEM			
2-D05	3220	STEERING GEAR (W/ POWER STEERING:ENGINE REVOLUTION PER MINUTE SENSOR)	2-C10	4500	FUEL PIPINGS			
			2-G10	4600	CHANGE CONTROL SYSTEM (AT)			
2-G05	3220 A	STEERING GEAR (W/ POWER STEERING:VELOCITY SENSOR)						
2-J05	3240	POWER STEERING SYSTEM						
2-M05	3300	FRONT AXLE						
2-C06	3310	FRONT BRAKE MECHANISMS						
2-G06	3400	FRONT SUSPENSION MECHANISMS						
2-I06	3401	FRONT SPRING & DAMPER						
2-J06	3410	CROSSMEMBER & STABILIZER						
2-K06	3700	TIRES & JACK						
2-C07	3900	ENGINE & T/MISSION MOUNTINGS (MT)						
2-D07	3900A	ENGINE & T/MISSION MOUNTINGS (AT)						
2-E07	4000	EXHAUST SYSTEM (W/O TURBO)						
2-I07	4000 A	EXHAUST SYSTEM (TURBO)						
2-L07	4140	CLUTCH RELEASE & MASTER CYLINDERS (MANUAL TRANSMISSION)						
2-N07	4145	CLUTCH PIPINGS (MANUAL TRANSMISSION)						

SECTION NAME INDEX (BODY) 1/2

LO.NO	SEC.NO	SECTION NAME
3-C03	0900	KEY SETS
3-F03	5000	FRONT BUMPER
3-H03	5010	REAR BUMPER
3-J03	5020	HEAD LAMP CLEANER
3-L03	5030	WINDOW MOULDINGS
3-M03	5040	BODY MOULDINGS (COUPE)
3-D04	5060	SIDE PROTECTORS
3-G04	5100	HEAD LAMPS
3-H04	5103	HEAD LAMP RETRACTORS
3-K04	5105	FRONT COMBINATION LAMPS
3-D05	5110	REAR COMBINATION LAMPS
3-H05	5120	LICENSE LAMPS
3-J05	5125	INTERIOR LAMPS
3-K05	5130	OVERHEAD CONSOLE
3-L05	5170	ORNAMENTS
3-M05	5180	COWL & EXTRACTOR GRILLES
3-D06	5230	BONNET
3-G06	5260	TRUNK LID (CONVERTIBLE)
3-H06	5310	FRONT PANELS (COUPE)
3-J06	5310 A	FRONT PANELS (CONVERTIBLE)
3-M06	5320	FENDER & WHEEL APRON PANELS (COUPE)
3-D07	5320 A	FENDER & WHEEL APRON PANELS (CONVERTIBLE)
3-G07	5330	DASH & COWL PANELS
3-H07	5340	SIDE PANELS (COUPE)
3-M07	5340A	SIDE PANELS (CONVERTIBLE)
3-G08	5360	ROOF PANELS (COUPE)
3-H08	5370	FLOOR PANELS (COUPE)
3-K08	5370 A	FLOOR PANELS (CONVERTIBLE)
3-C09	5380	FLOOR ATTACHMENTS (HOLE COVERS)
3-E09	5390	FLOOR ATTACHMENTS
3-C10	5500	DASHBOARD EQUIPMENTS
3-F10	5520	METER HOOD
3-G10	5530	SPEEDOMETER CABLE
3-H10	5540	METER COMPONENTS
3-J10	5560	DASHBOARD & RELATED PARTS
3-D11	5570	CONSOLE
3-G11	5580	VENTILATOR
3-H11	5700	FRONT SEATS (COUPE)
3-J12	5700A	FRONT SEATS (CONVERTIBLE)
3-D13	5790	SEAT BELTS (COUPE)
3-F13	5790A	SEAT BELTS (CONVERTIBLE)
3-G13	5795	AIR BAG
3-H13	5800	FRONT DOORS (COUPE)
3-K13	5800A	FRONT DOORS (CONVERTIBLE)
3-C14	5830	FRONT DOOR MECHANISMS (COUPE)
3-I14	5830A	FRONT DOOR MECHANISMS (CONVERTIBLE)
3-M14	5840	FRONT DOOR TRIMS & RELATED PARTS (COUPE)
3-H15	5840A	FRONT DOOR TRIMS & RELATED PARTS (CONVERTIBLE)
3-C16	6100	HEATER
3-E16	6110	HEATER UNIT COMPONENTS
3-F16	6115	HEATER CONTROLS COMPONENTS
3-G16	6120	HEATER BLOWER COMPONENTS
3-I16	6130	AIR CONDITIONER (JAPAN MAKE)
3-L16	6130A	AIR CONDITIONER (OPTIONAL PARTS)

SECTION NAME INDEX (BODY)2/2

LO.NO	SEC.NO	SECTION NAME
4-C03	6135	O RING SET,PIPING
4-D03	6140	COMPRESSOR COMPONENTS (AIR CONDITIONER) (JAPAN MAKE)
4-G03	6140A	COMPRESSOR COMPONENTS (AIR CONDITIONER) (OPTIONAL PARTS)
4-I03	6150	COOLING UNIT (AIR CONDITIONER) (JAPAN MAKE)
4-J03	6150A	COOLING UNIT (AIR CONDITIONER) (OPTIONAL PARTS)
4-K03	6230	LIFT GATE MECHANISMS (COUPE)
4-N03	6300	WINDOW GLASSES (COUPE)
4-C04	6300A	WINDOW GLASSES (CONVERTIBLE)
4-D04	6330	SUNROOF (COUPE)
4-H04	6330A	SUNROOF (CONVERTIBLE)
4-M04	6600	SWITCHES & RELAYS (ENGINE)
4-G05	6610	DASHBOARD SWITCHES
4-H05	6611	COMBINATION SWITCH
4-I05	6612	CLUSTER SWITCH
4-L05	6615	POWER WINDOW SWITCHES
4-M05	6630	RELAYS & UNIT (BODY)
4-C06	6635	DOOR SWITCH & HORNS
4-D06	664C	AUTO CRUISE CONTROL SYSTEM
4-E06	6680	AUDIO SYSTEMS (RADIO & TAPE DECK)
4-J06	6682	AUDIO SYSTEMS (ANTENNA & SPEAKER)
4-C07	6684	AUDIO SYSTEMS(NOISE SUPPRESSOR & EARTH CORD)
4-D07	6700	WIRING HARNESSES(FRONT & REAR) (COUPE)
4-F07	6700 A	WIRING HARNESSES(FRONT & REAR) (CONVERTIBLE)
4-H07	6701	WIRING HARNESSES(ENGINE & T/MISSION) (COUPE)
4-J07	6701 A	WIRING HARNESSES(ENGINE & T/MISSION) (CONVERTIBLE)
4-K07	6702	WIRING HARNESSES(DASHBOARD)
4-L07	6703	WIRING HARNESSES(DOOR,FLOOR/CEILING)
4-M07	6704	WIRING HARNESS CLAMPS
4-D08	6720	WINDSHIELD WASHER
4-F08	6730	WINDSHIELD WIPERS
4-G08	6740	WIPER MOTOR COMPONENTS(FRONT)
4-H08	6750	WINDOW WIPER & WASHER (REAR)
4-K08	6760	WINDOW WIPER MOTOR COMPONENTS (REAR)
4-L08	6800	CEILING TRIMS (COUPE)
4-N08	6800A	CEILING TRIMS (CONVERTIBLE)
4-C09	6810	ROLLEBAR (CONVERTIBLE)
4-E09	6820	PILLAR TRIMS (COUPE)
4-G09	6820A	PILLAR TRIMS (CONVERTIBLE)
4-H09	6840	TRIMS & SCUFF PLATES (COUPE)
4-L09	6840A	TRIMS & SCUFF PLATES (CONVERTIBLE)
4-N09	6845	STRAGE BOX
4-D10	6860	FLOOR MATS & PADS (COUPE)
4-I10	6860A	FLOOR MATS & PADS (CONVERTIBLE)
4-M10	6870	SERVICE TOOLS
4-N10	6900	VISORS,ASSIST HANDLES & MIRRORS (COUPE)
4-E11	6900A	VISORS,ASSIST HANDLES & MIRRORS (CONVERTIBLE)
4-G11	6930	CAUTION PLATES & LABELS
4-I11	7250	QUARTER WINDOW & TRIMS
4-K11	7800	SPOILERS & RELATED PARTS

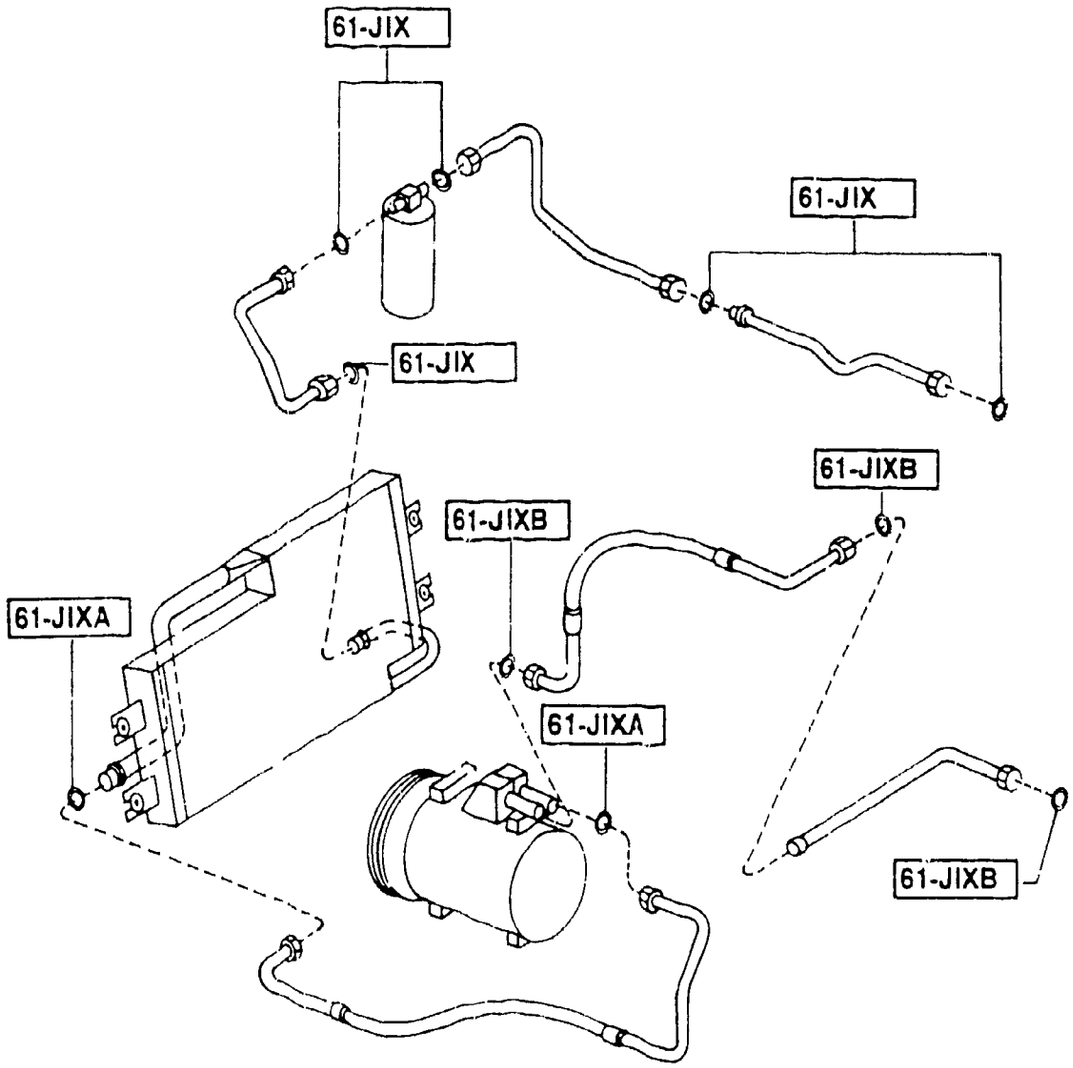

6135 -1 * O RING SET,PIPING

PART NO.	QTY	MODEL/RESTRICTION	MODEL/RESTRICTION	MODEL/RESTRICTION	FROM-TO
61-J1X		RING,'O'-NO.1			
FCY0-61-J17	3				
61-J1XA		RING,'O'-NO.2			
FCY6-61-J17	2				
61-J1XB		RING,'O'-NO.3			
FCY1-61-J17	3				

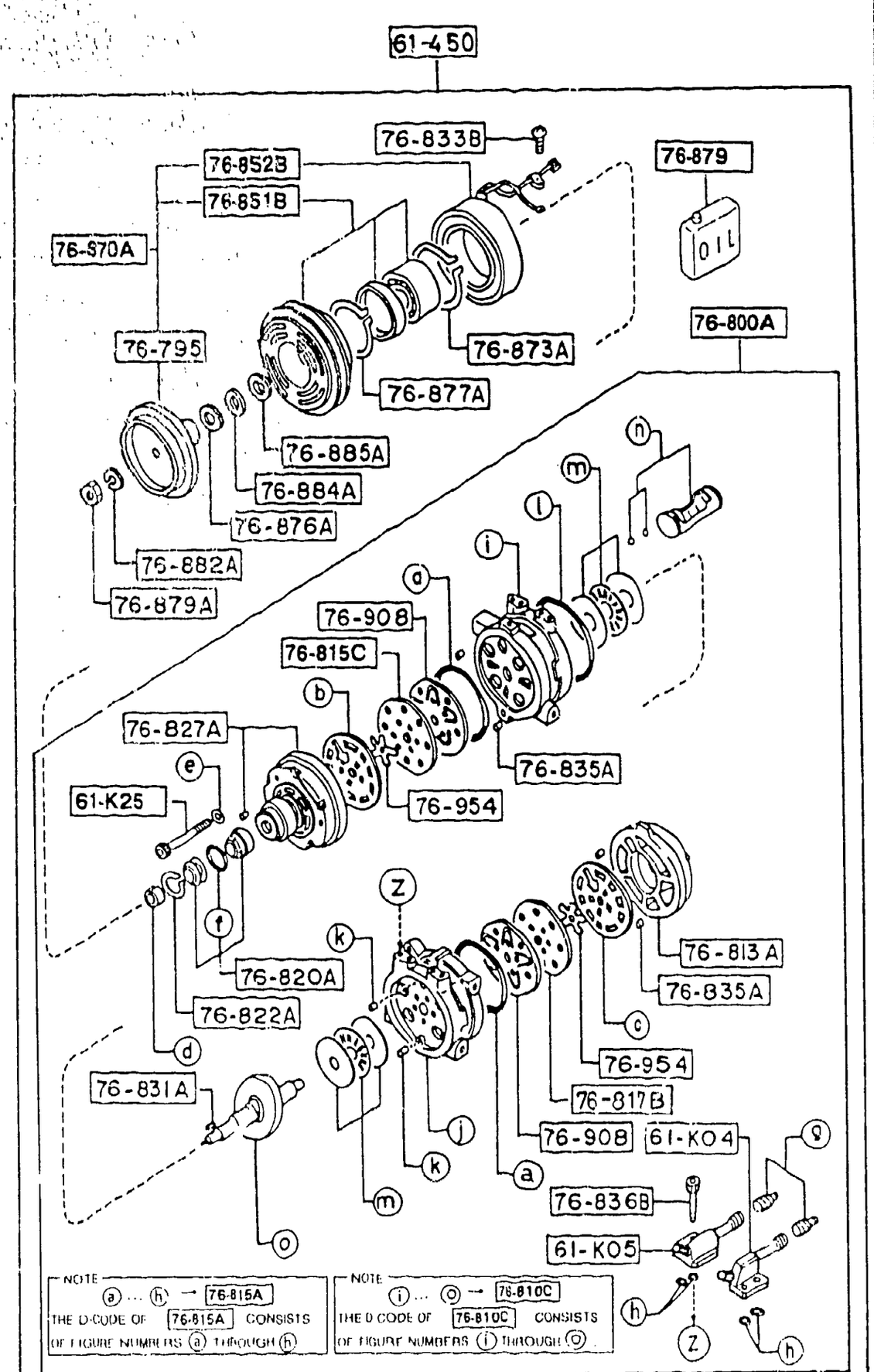

6140 -1 COMPRESSOR COMPONENTS (AIR CONDITIONER)
(JAPAN MAKE)

PART NO.	QTY	MODEL/RESTRICTION	MODEL/RESTRICTION	MODEL/RESTRICTION	FROM-TO
61-K04 F044-61-K04	1	CONNECTOR,SUCTION VALVE			
61-K05 FB02-61-K05	1	CONNECTOR,DISCHARGE VALVE			
61-K25 FB01-61-K25	5	BOLT,COMPRESSOR-AIR CON.			
61-450 FB02-61-45CA	1	COMPRESSOR			
76-795 FB01-61-L11	1	ARMATURE			
76-800A FB02-61-K00A	1	COMPRESSOR,AIR CON.			
76-810C F044-61-K10A	1	SHAFT,CYLINDER			
76-813A FA54-76-902	1	HEAD,CYL.-COMPRESSOR			
76-815A FA54-76-909	1	GASKET			
76-815C FA54-76-898	1	PLATE,VALVE			
76-817B FA54-76-899	1	PLATE,VALVE			
76-820A D001-61-K19A	1	SEAL			
76-822A FA54-76-904	1	RING,SNAP			
76-827A FA54-76-893A	1	HEAD,CYL.-COMPRESSOR			

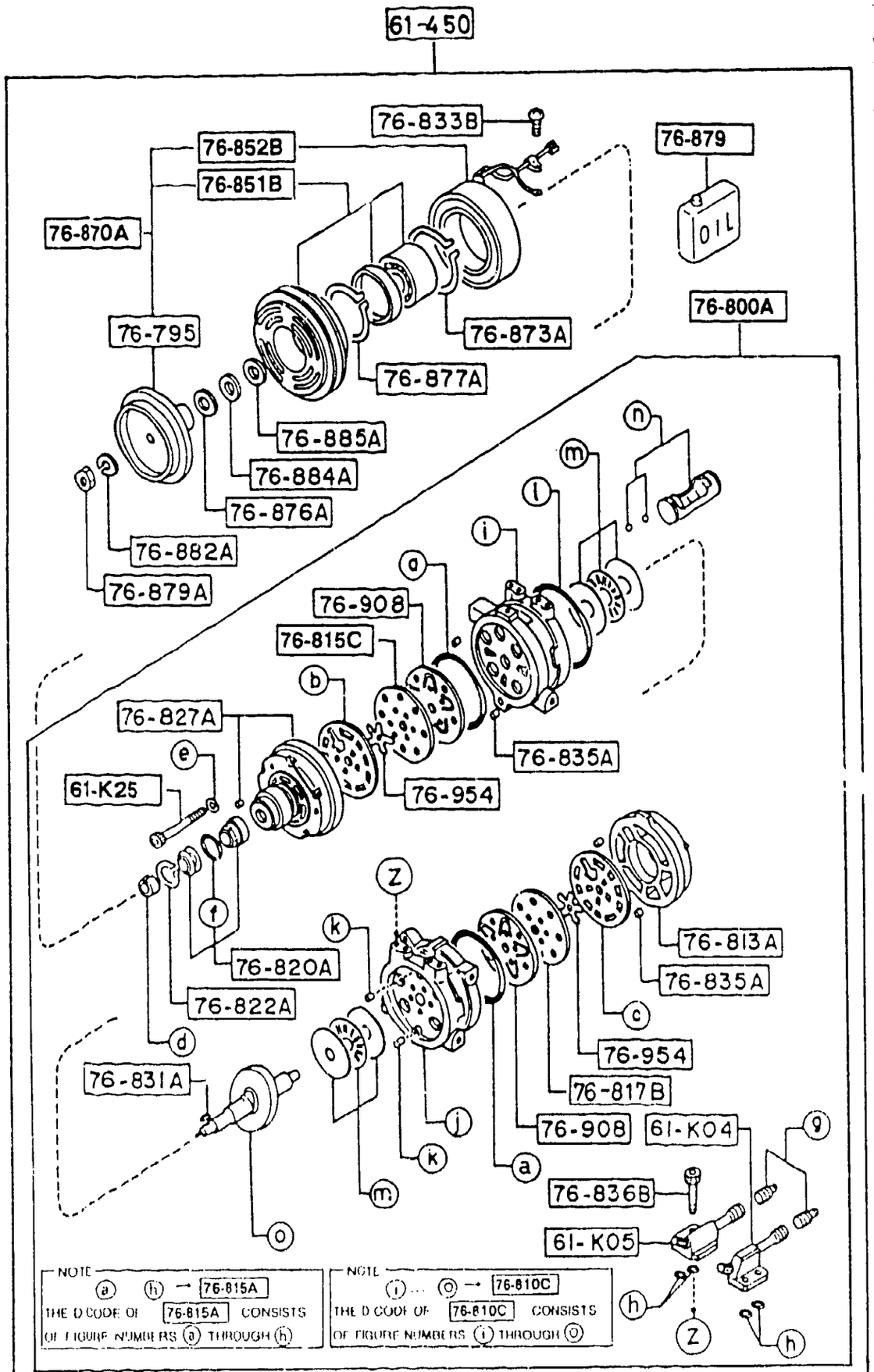

PART NO.	QTY	MODEL/RESTRICTION	MODEL/RESTRICTION	MODEL/RESTRICTION	FROM-TO
76-831A FA54-76-905	1	KEY			
76-833B B001-76-734	1	WASHER			
76-835A B001-76-897	4	PIN,ROLL			
76-836B B001-76-908	4	BOLT			
76-851B FB01-61-L12	1	PULLEY			
76-852B FB01-61-L13	1	COIL,FIELD			
76-870A FB01-61-L10	1	CLUTCH,MAGNET			
76-873A B001-76-726	1	RING,SNAP			
76-876A B001-76-729	1	WASHER			
76-877A B001-76-725	1	RING,SNAP			
76-879 FB01-61-K39	1	OIL,COMPRESSOR			
76-879A B001-76-728	1	NUT			
76-882A B001-76-727	1	WASHER,SPRING			
76-884A B001-76-731	1	WASHER			

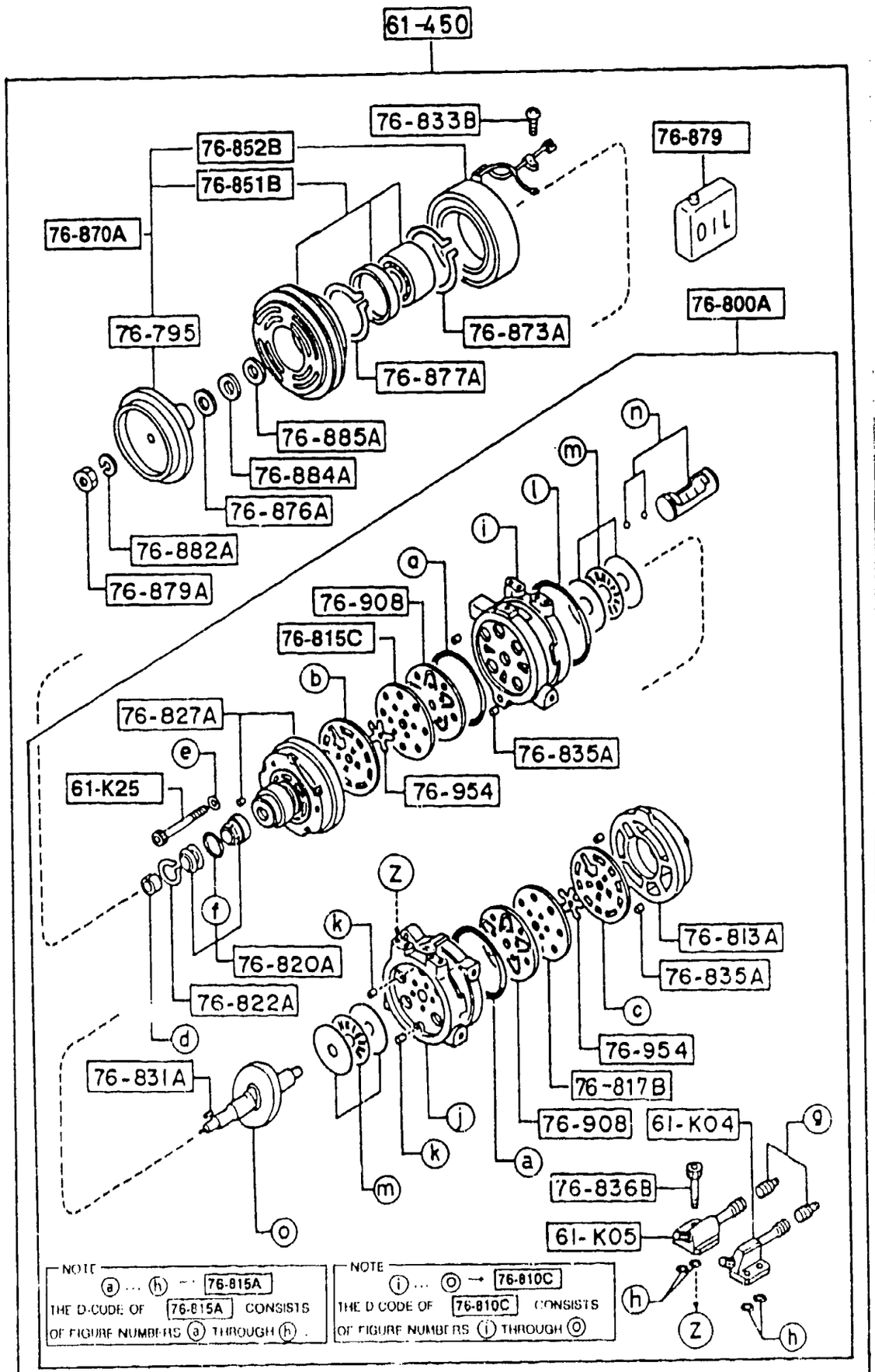

6140 -3 * COMPRESSOR COMPONENTS (AIR CONDITIONER)
(JAPAN MAKE)

PART NO.	QTY	MODEL/RESTRICTION	MODEL/RESTRICTION	MODEL/RESTRICTION	FROM-TO
76-885A		WASHER,SPRING			
B001-76-732	1				
76-908		VALVE			
FA54-76-896	2				
76-954		VALVE			
FA54-76-897	2				

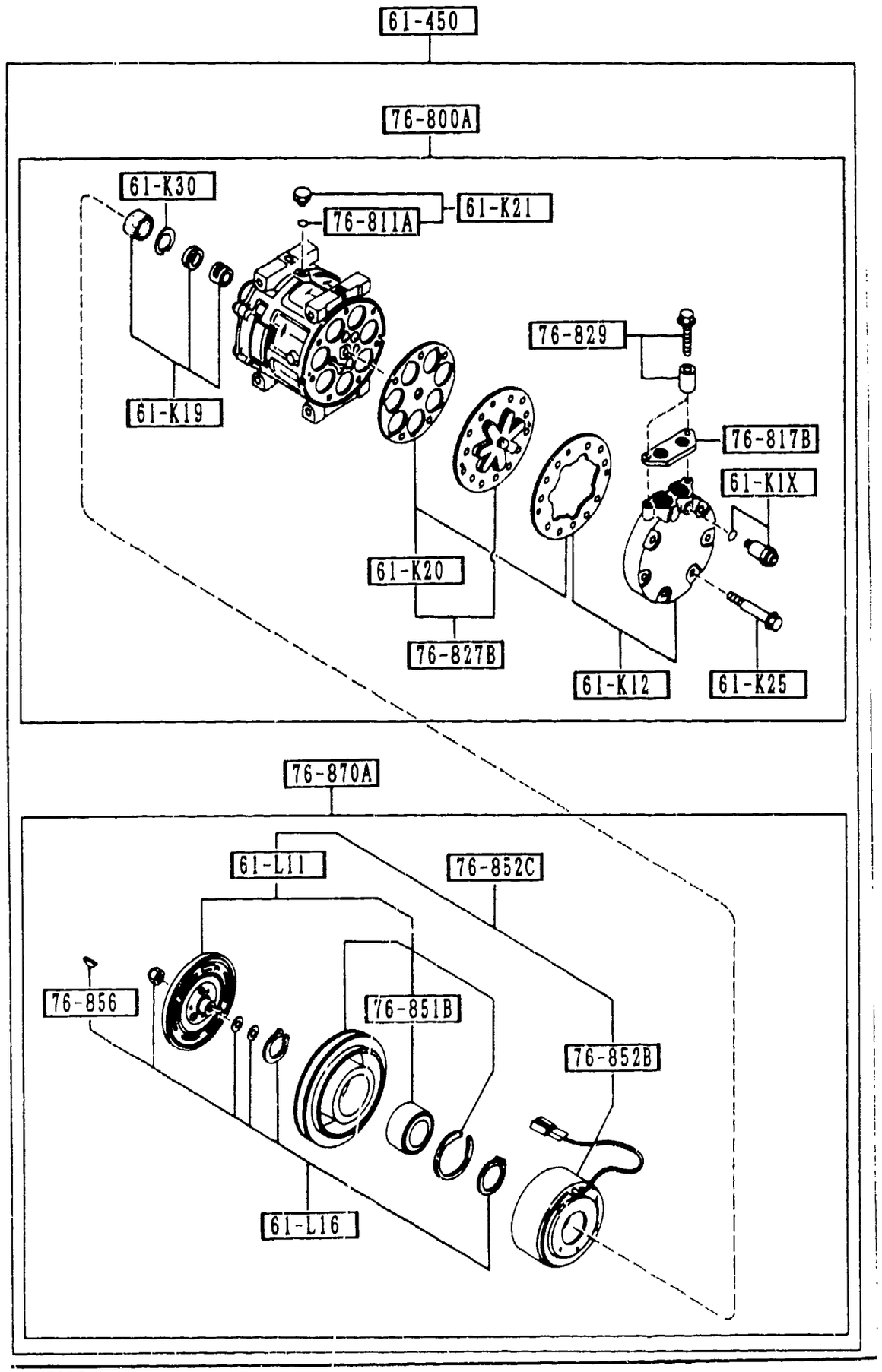

AUFA03

PART NO.	QTY	MODEL/RESTRICTION	MODEL/RESTRICTION	MODEL/RESTRICTION	FROM-TO
61-K1X FC20-61-K1X	1	VALVE,RELIEF (A)			
61-K12 FC20-61-K12	1	HEAD,CYL.-COMPRESSOR (A)			
61-K19 FC20-61-K19	1	SEAL,SHAFT-COMPR. (A)			
61-K20 FC20-61-K20	1	GASKET KIT,COMPRESSOR (A)			
61-K21 FC20-61-K21	1	PLUG,COMPRESSOR (A)			
61-K25 FC20-61-K25	1	BOLT,COMPRESSOR-AIR CON. (A)			
61-K30 FC20-61-K30	1	PIN,COMPRESSOR (A)			
61-L11 FC20-61-L11	1	ARMATURE,MAGNETIC CLUTCH (A)			
61-L16 FC20-61-L16	1	RING,SNAP-MAGNET CLUTCH (A)			
61-450 FC20-61-450	1	COMPRESSOR (A)			
76-800A FC20-61-K00	1	COMPRESSOR,AIR CON. (A)			
76-811A		RING,'O'			

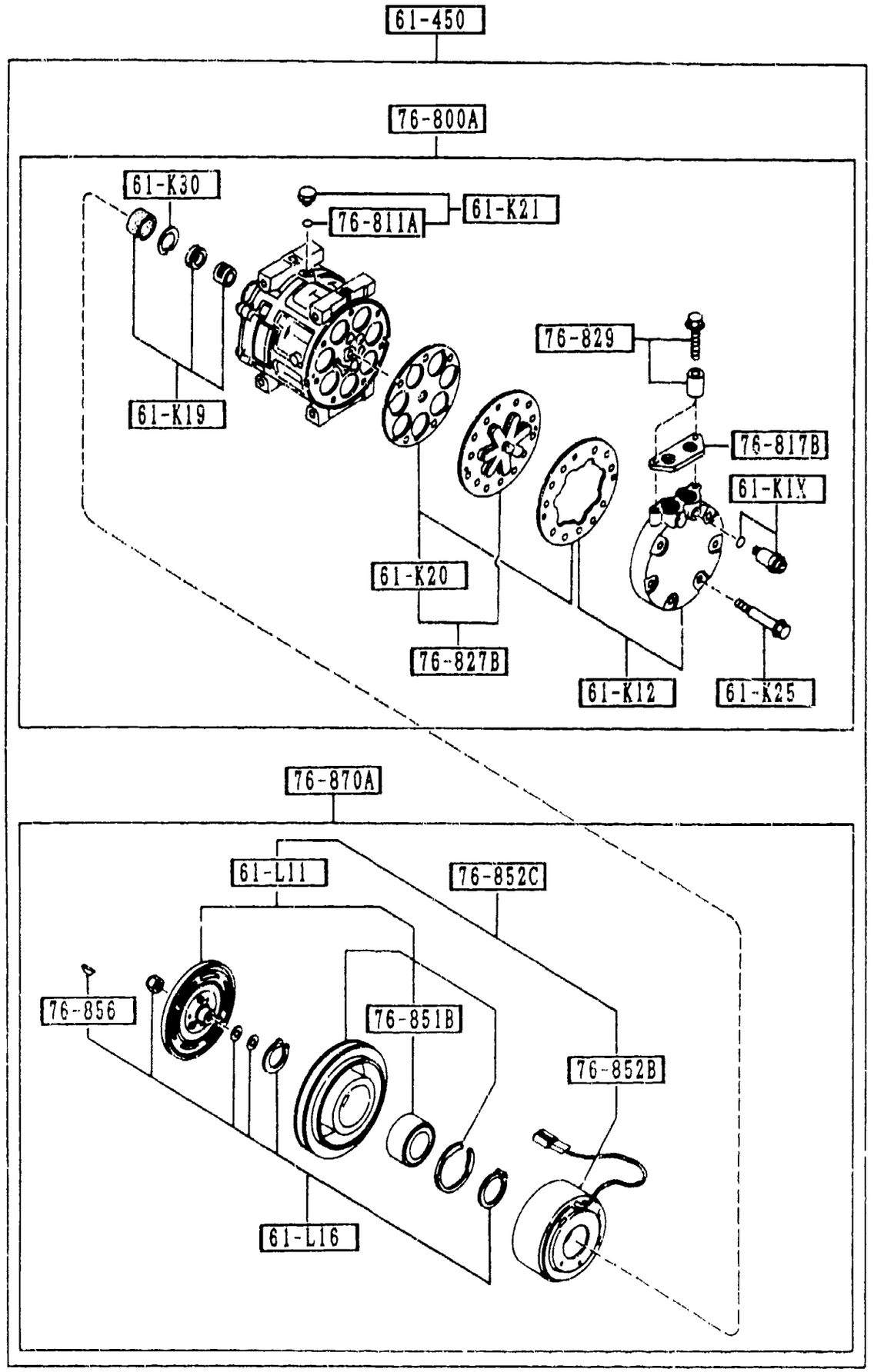

AUFA03

PART NO.	QTY	MODEL/RESTRICTION	MODEL/RESTRICTION	MODEL/RESTRICTION	FROM-TO
CONT'D					
FC20-61-K13	1	(A)			
76-817B		PLATE,VALVE			
FC20-61-K17	1	(A)			
76-827B		PLATE			
FC20-61-K27	1	(A)			
76-829		BOLT			
FC20-61-K29	1	(A)			
76-851B		PULLEY			
FC20-61-L12	1	(A)			
76-852B		COIL,FIELD			
FC20-61-L13	1	(A)			
76-852C		MAGNET			
FC20-61-L30	1	(A)			
76-856		COVER			
FC20-61-L17	1	(A)			
76-870A		CLUTCH,MAGNET			
FC20-61-L10	1	(A)			

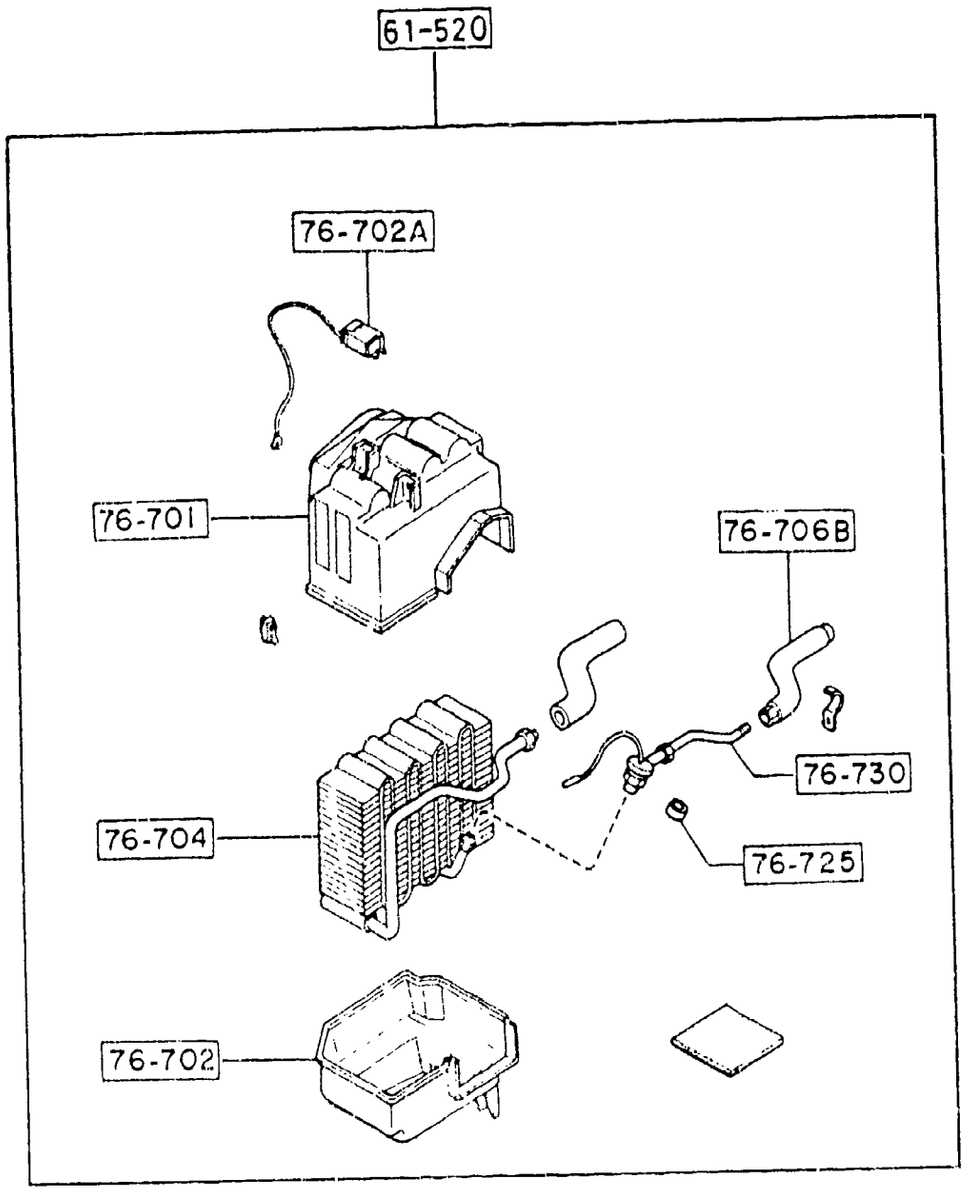

6150 -1 * COOLING UNIT (AIR CONDITIONER)
(JAPAN MAKE)

PART NO.	QTY	MODEL/RESTRICTION	MODEL/RESTRICTION	MODEL/RESTRICTION	FROM-TO
61-520		UNIT,COOLING			
FB01-61-520A	1				
76-701		CASE,COOLING UNIT			
FB01-61-J01	1				
76-702		CASE,COOLING UNIT			
FB01-61-J02	1				
76-702A		THERMOSTAT			
FB01-61-J20	1				
76-704		EVAPORATOR			
FB01-61-J10	1				
76-706B		PIPE			
FB01-61-J15	1				
76-725		HOLDER,VALVE			
1273-76-704	1				
76-730		VALVE,EXPANSION			
B111-61-J14	1				

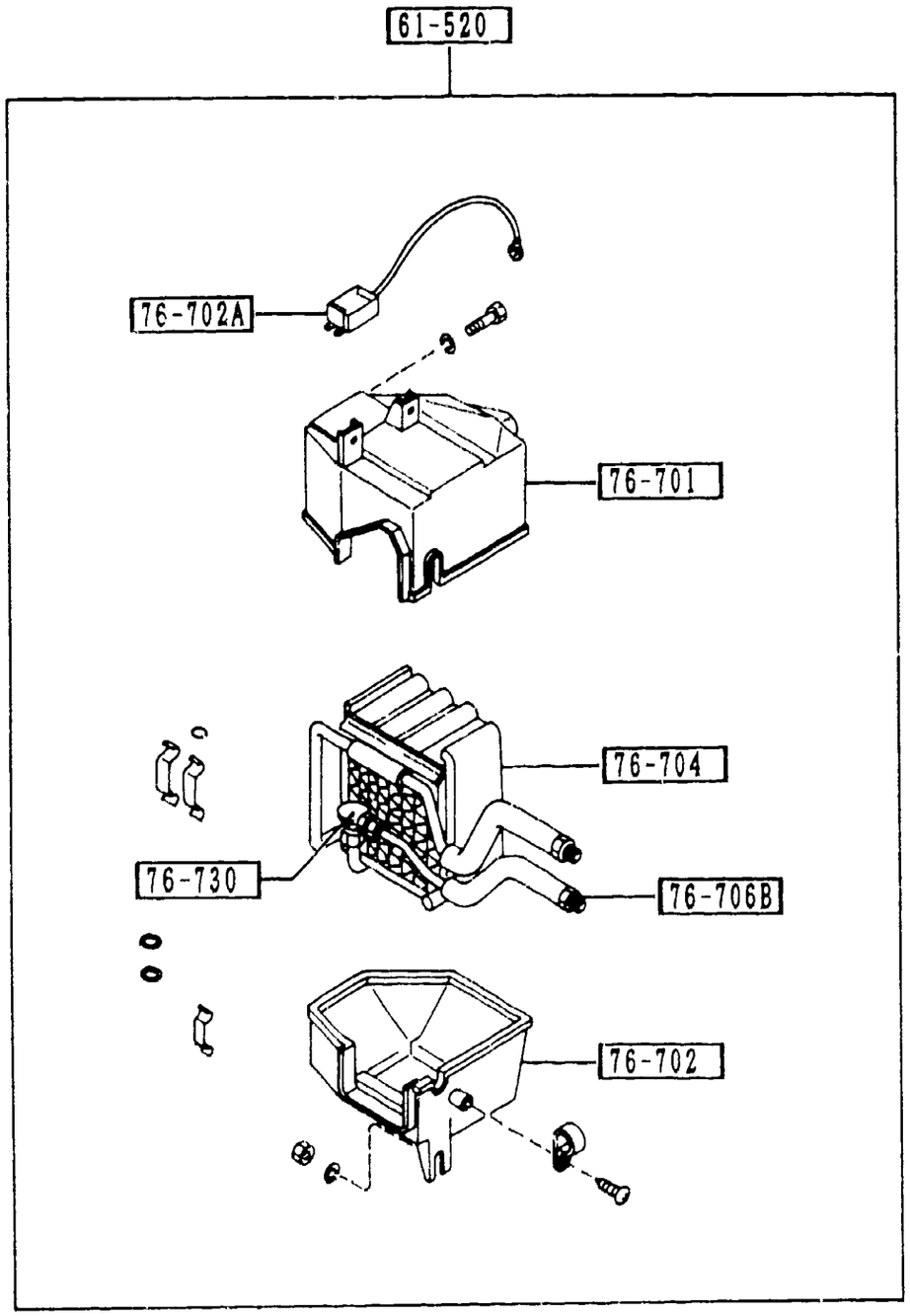

6150A -1 ✱ COOLING UNIT (AIR CONDITIONER)
(OPTIONAL PARTS)

PART NO.	QTY	MODEL/RESTRICTION	MODEL/RESTRICTION	MODEL/RESTRICTION	FROM-TO
61-520 FB04-61-520A	1	UNIT,COOLING (A)			
76-701 FB04-61-J01	1	CASE,COOLING UNIT (A)			
76-702 FB04-61-J02	1	CASE,COOLING UNIT (A)			
76-702A FB04-61-J20	1	THERMOSTAT (A)			
76-704 FB04-61-J10	1	EVAPORATOR (A)			
76-706B FB04-61-J15	1	PIPE (A)			
76-730 FB04-61-J14	1	VALVE,EXPANSION (A)			

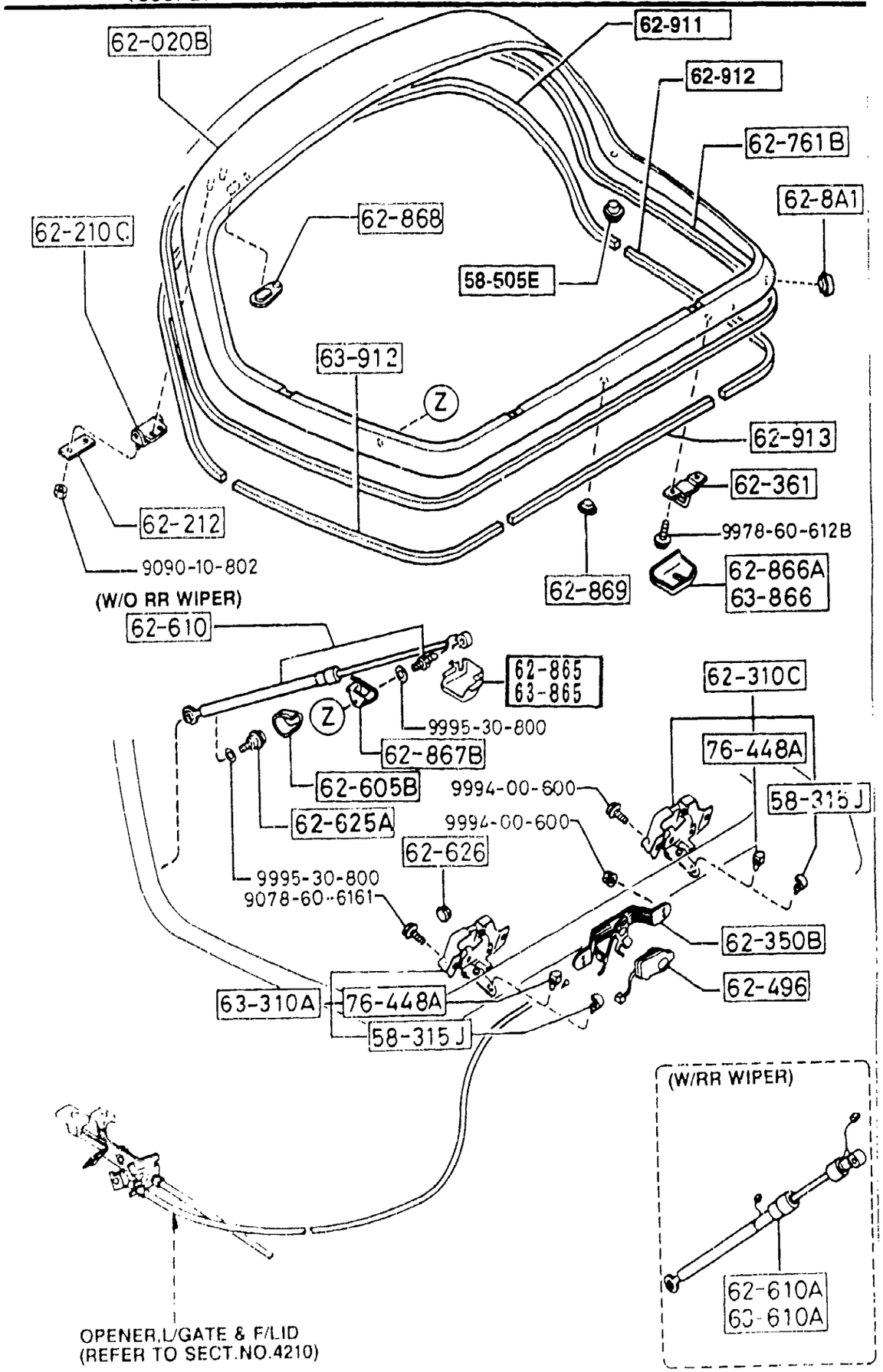

PART NO.	QTY	MODEL/RESTRICTION	MODEL/RESTRICTION	MODEL/RESTRICTION	FROM-TO
58-315J		CLIP			
H001-58-315	2				
58-505E		CAP			
B092-58-355	2				
62-020B		FRAME,GLASS HATCH			
FC01-62-020	1	W/O WIPER			
FC02-62-020	1	W/WIPER			
62-210C		HINGE,GLASS HATCH			
FC73-62-210	2				
62-212		GASKET,HINGE-LIFT GATE			
FB01-62-212	2				
62-310C		LOCK(R),GLASS HATCH			
FB01-62-310D	1				
62-350B		UNIT,OPENER-GLASS HATCH			
FB01-62-350E	1				
62-361		STRIKER,LOCK			
FB01-62-361B	2				
62-496		SWITCH,LOCK CYLINDER			
FB02-62-496A	1				
62-605B		COVER,DAMPER STAY			
FB01-62-615	2				
62-610		STAY,DAMPER			
8BF1-62-620B	2	(FOR RIGHT & LEFT) (W/O RR WIPER)			
62-610A		STAY(R),DAMPER			
8BF7-62-620	1	(W/RR WIPER)			
62-625A		BOLT,BRACKET-STAY DAMPER			
FB01-62-625	2				

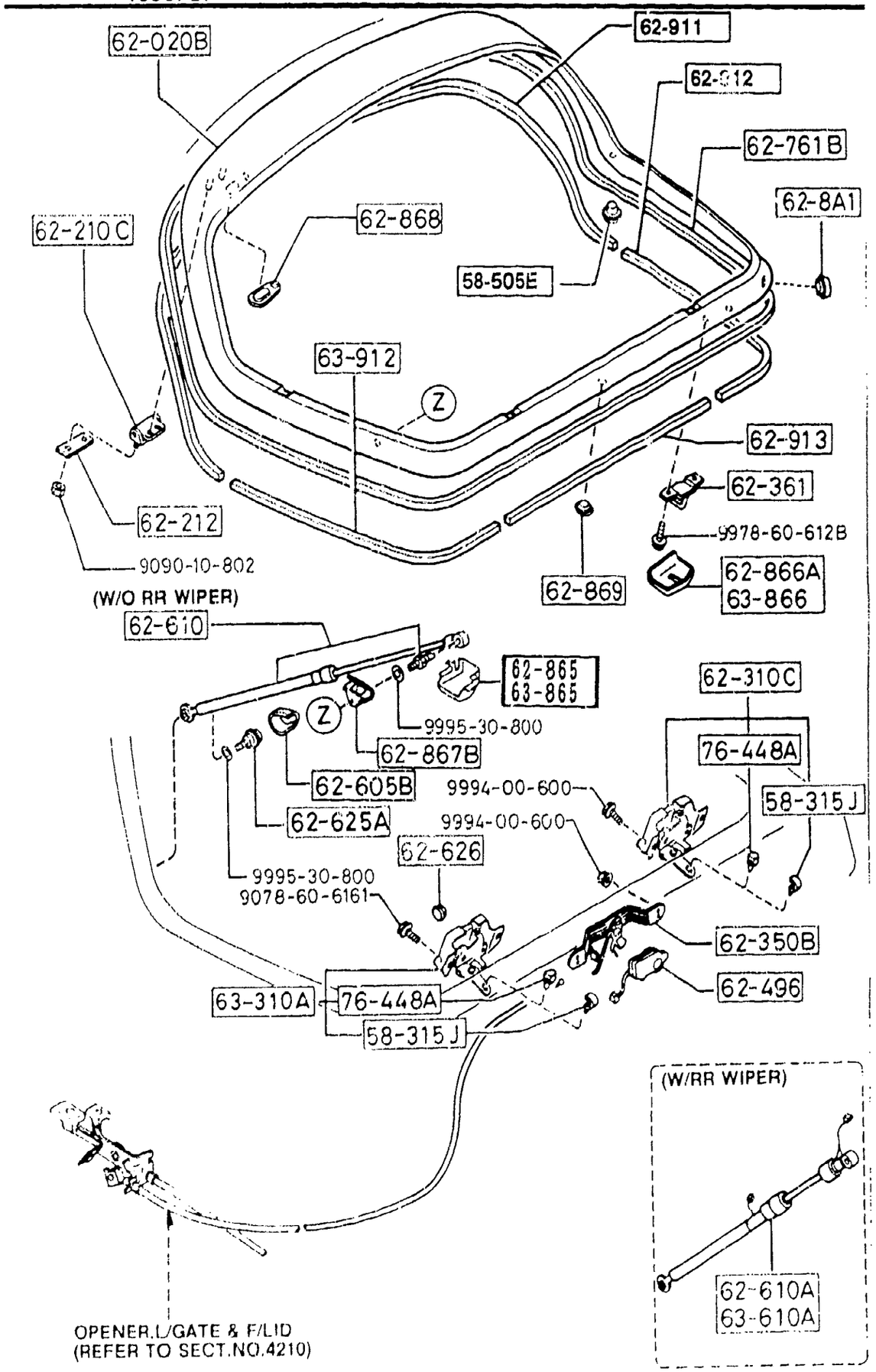

PART NO.	QTY	MODEL/RESTRICTION	MODEL/RESTRICTION	MODEL/RESTRICTION	FROM-TO
62-626		PLUG,HOLE-LAMP & WIP .HARN			
FB01-62-626	1	(W/RR WIPER)			
FB01-62-626	2	(W/O RR WIPER)			
62-761B		WEATHERSTRIP,GLASS H ATCH			
FB01-62-761C	1				
62-8A1		PLUG,HOLE-HATCH FRAM E LOW			
FB01-62-8A1A	2				
62-865		COVER'A'(R),FRAME-G. HATCH			
FB01-62-865A	1				
62-866A		COVER'B'(R),FRAME-G. HATCH			
FB01-62-866B	1				
62-867B		COVER,BRACKET-DAMPER STAY			
FB01-62-867A	2				
62-868		PLUG,HOLE-HATCH FRAM E UP.			
FB01-62-868	2				
62-869		PLUG,HOLE-HATCH FRAM E LOW			
FB01-62-869	1				
62-911		WELT,SEAMING-GLS HAT CH UP			
FB01-62-911C	1				
62-912		WELT(R),SEAMING-GLS HATCH			
FB01-62-912B	1				
62-913		WELT,SEAMING-GLS HAT CH LW			
FB01-62-913C	1	NON USA,			
FB02-62-913B	1				
63-310A		LOCK(L),GLASS HATCH			
FB01-63-310E	1				
63-610A		STAY(L),DAMPER			
8BF3-63-620	1	(W/RR WIPER)			

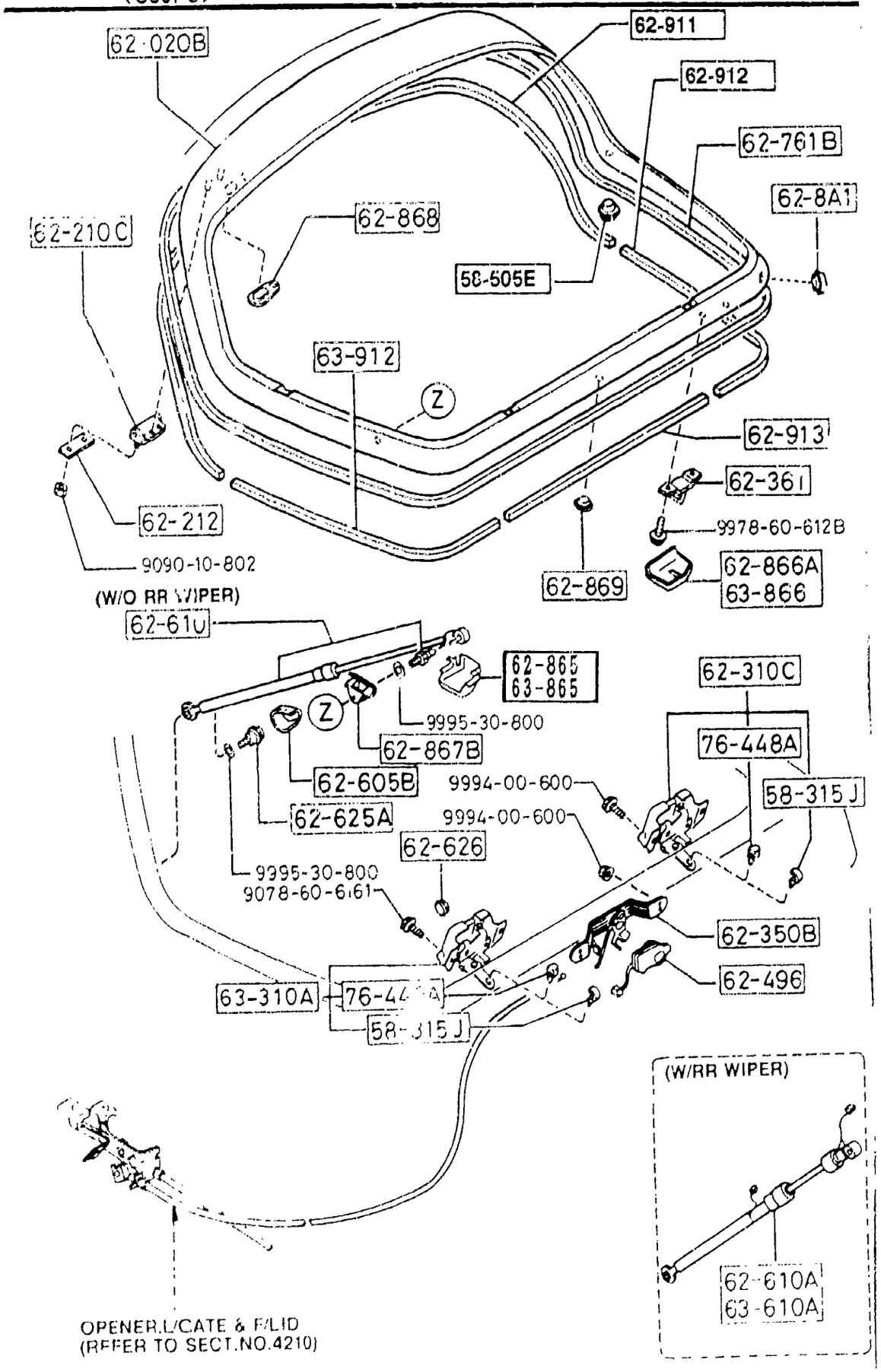

PART NO.	QTY	MODEL/RESTRICTION	MODEL/RESTRICTION	MODEL/RESTRICTION	FROM-TO
63-865		COVER'A'(L),FRAME-G. HATCH			
FB01-63-865A	1				
63-866		COVER'B'(L),FRAME-G. HATCH			
FB01-63-866B	1				
63-912		WELT(L),SEAMING-GLS HATCH			
FB02-63-912B	1				
76-448A		CLIP			
G030-76-448	2				

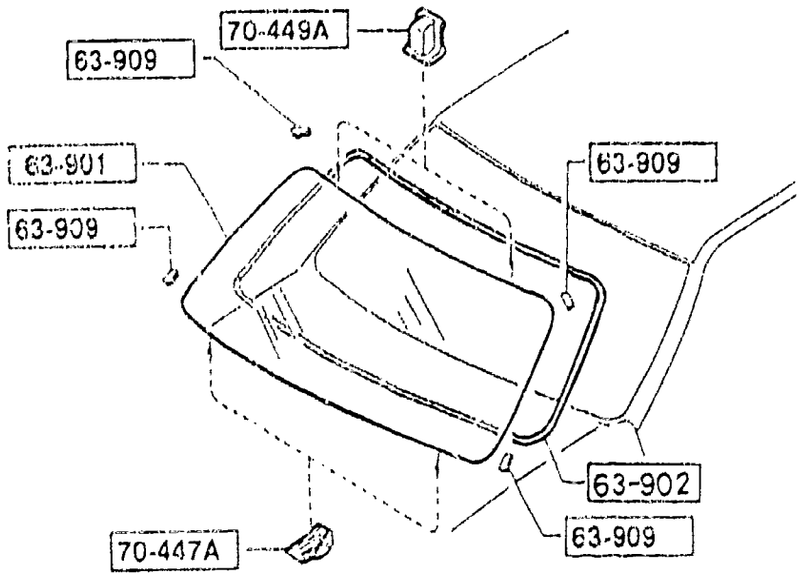

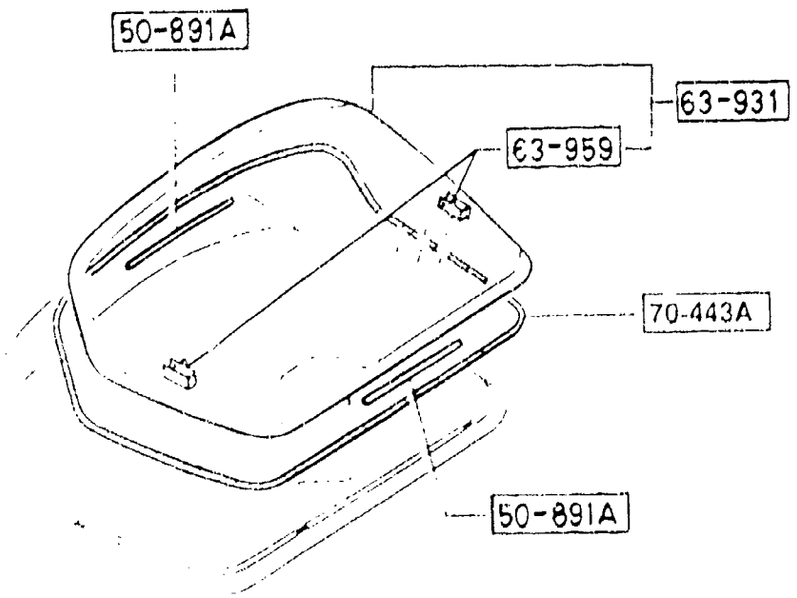

6300 -1 * WINDOW GLASSES (COUPE)

PART NO.	QTY	MODEL/RESTRICTION	MODEL/RESTRICTION	MODEL/RESTRICTION	FROM-TO
50-891A FB01-50-891	2	SPACER,WINDOW			
63-901 FC02-63-901	1	GLASS,WINDSHIELD			
63-902 FB01-50-895A	1	DAM,FRT.WSHLD GLASS			
63-909 8182-63-903	4	SPACER			
63-931 FB01-63-930	1	GLASS,BACK WINDOW BLUE BASE, (W/O RR WIPER)			
FB02-63-930	1	BASE-OPT, TURBO, (W/RR WIPER)			
63-959 FB01-63-959	2	TERMINAL,BACK WIND. GLASS			
70-443A FB01-50-896	1	DAM,RR.WINDOW GLASS			
70-447A F301-50-893	2	SPACER'A'			
70-449A FB01-50-897	2	SPACER'C'			

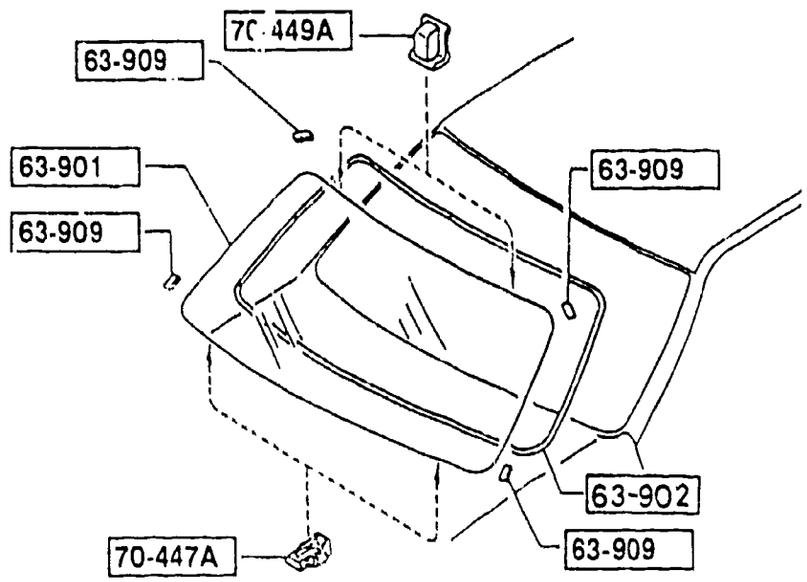

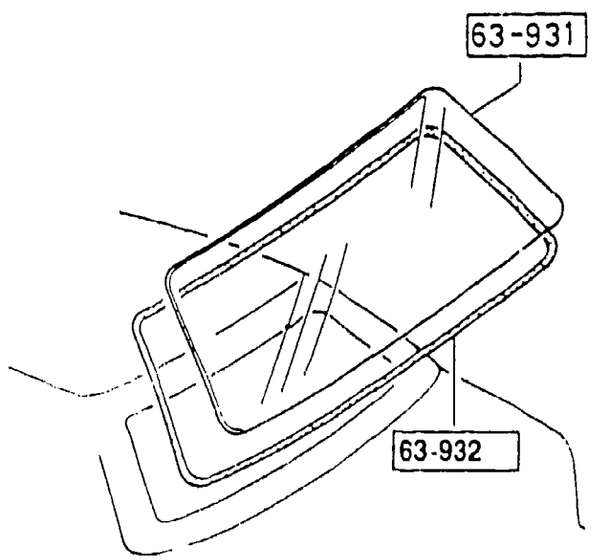

6300A -1 * WINDOW GLASSES
(CONVERTIBLE)

PART NO.	QTY	MODEL/RESTRICTION	MODEL/RESTRICTION	MODEL/RESTRICTION	FROM-TO
63-901		GLASS,WINDSHIELD			
FB03-63-901E	1				
63-902		DAM,FRT.WSHLD GLASS			
FB67-50-894	1				
63-909		SPACER			
8182-63-903	4				
63-931		GLASS,BACK WINDOW			
FB67-63-931A	1	BLUE			
63-932		WEATHERSTRIP,RR.WIND			
FB67-63-932B	1				
70-447A		SPACER'A'			
FB01-50-893	2				
70-449A		SPACER'C'			
FB01-50-897	2				

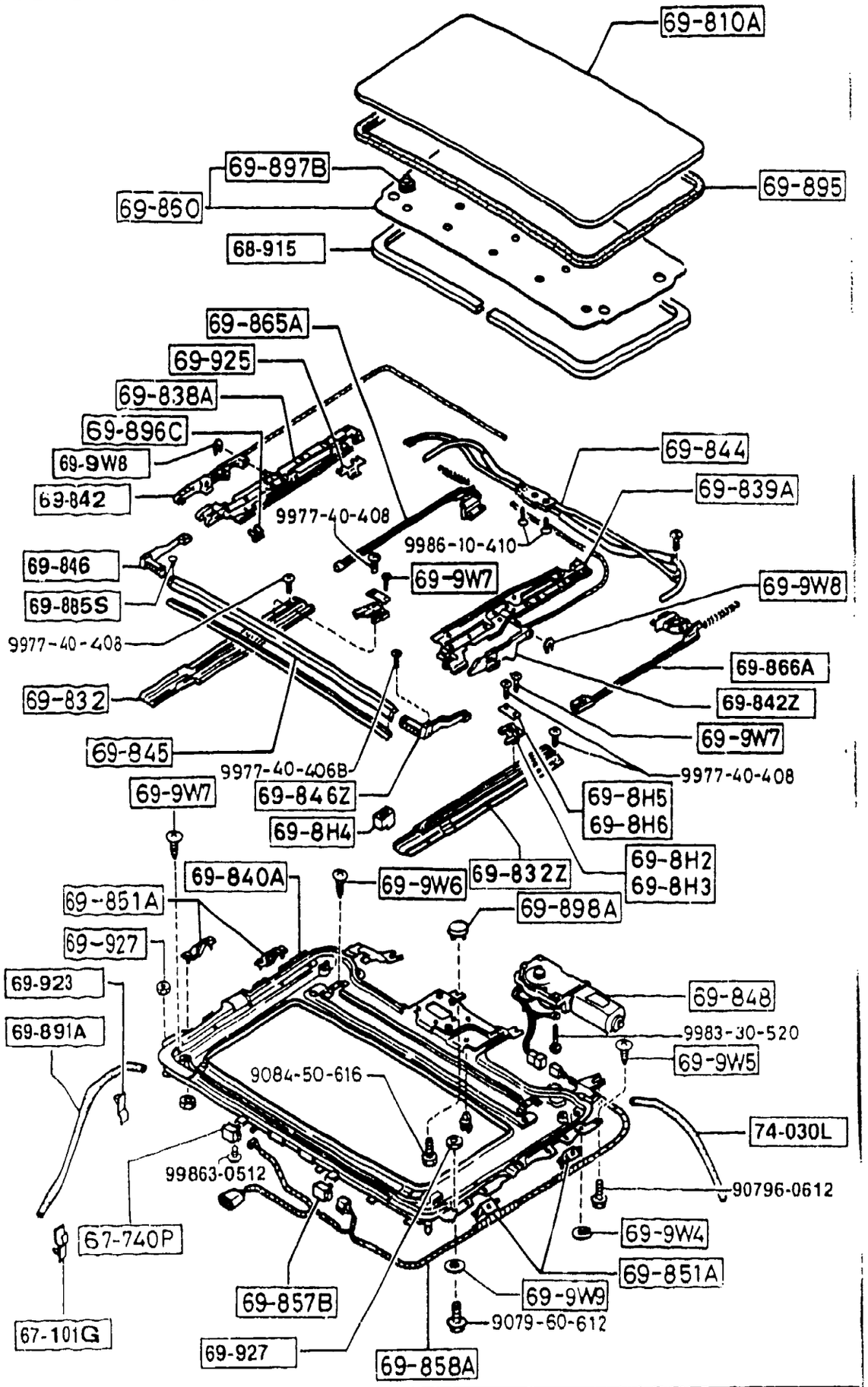

AUFA03

PART NO.	QTY	MODEL/RESTRICTION	MODEL/RESTRICTION	MODEL/RESTRICTION	FROM-TO
67-101G		CLIP,DRAIN HOSE-FRONT			
FB03-69-928	4				
67-740P		RELAY,SLIDE ROOF			
FB03-69-873	1				
68-915		WELT,SEAMING			
FB03-69-915A	1				
02	INT-	FD8 BLACK			
48	INT-	FD9 BLUE			
69-8H2		CLIP(R),TUBE-LOWER			
FB03-69-8H2A	1				
69-8H3		CLIP(L),TUBE-LOWER			
FB03-69-8H3A	1				
69-8H4		GASKET,TUBE-CLIP			
FB03-69-8H4	2				
69-8H5		CLIP(R),TUBE-UPPER			
FB03-69-8H5	1				
69-8H6		CLIP(L),TUBE-UPPER			
FB03-69-8H6	1				
69-810A		PANEL,SLIDING ROOF			
FB03-69-810H	1				
69-832		RAIL(R),GUIDE			
FB03-69-832C	1				
69-833?		RAIL(L),GUIDE			
FB03-69-833C	1				
69-838A		PANEL(R),LOWER-SLDG ROOF			
FB03-69-838C	1				
69-839A		PANEL(L),LOWER-SLDG ROOF			
FB03-69-839C	1				

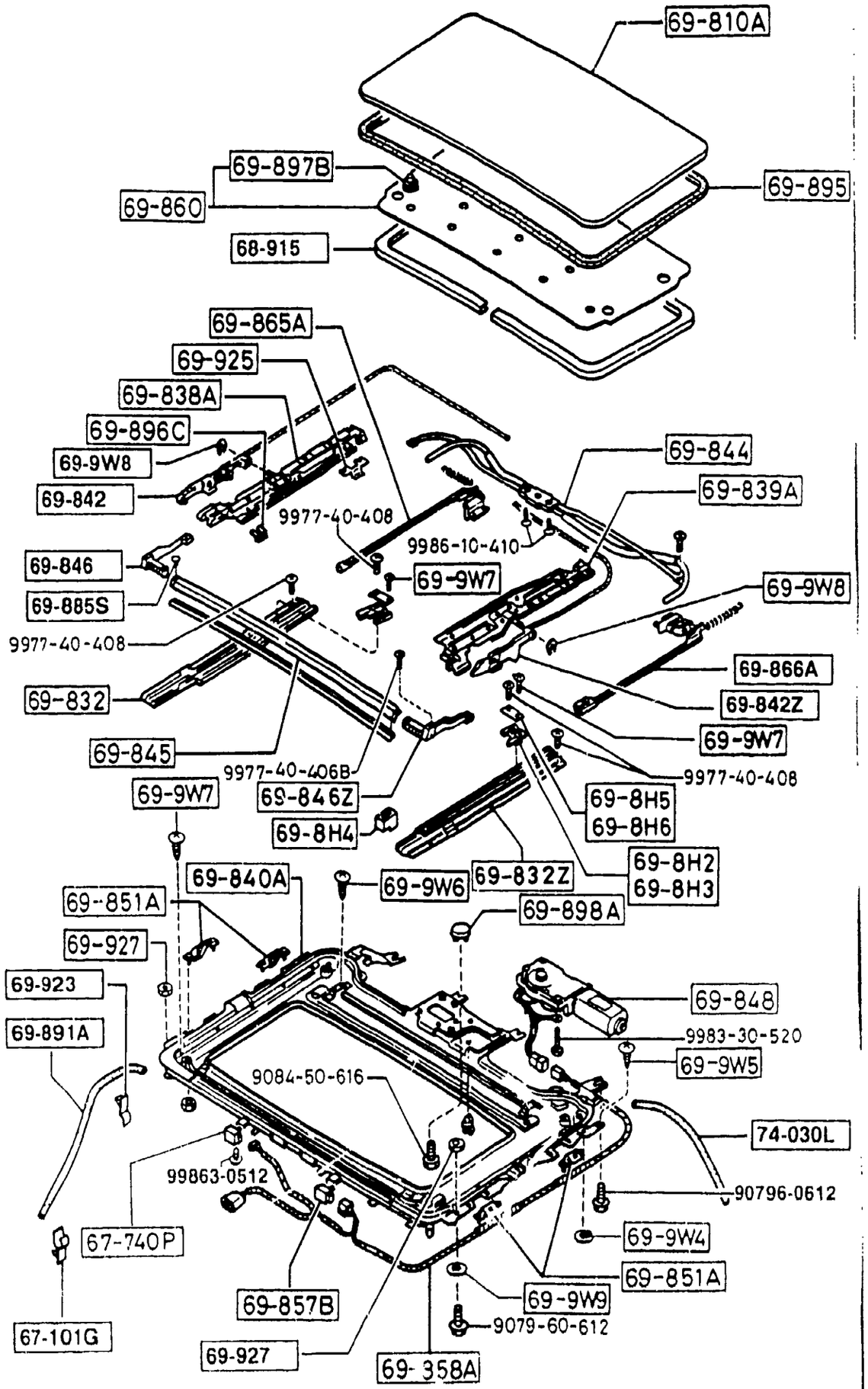

AUFA03

PART NO.	QTY	MODEL/RESTRICTION	MODEL/RESTRICTION	MODEL/RESTRICTION	FROM-TO
69-840A		FRAME,SLIDING ROOF			
FB03-69-831J	1				
69-842		GUIDE(R),REAR			
FB03-69-842A	1				
69-842Z		GUIDE(L),REAR			
FB03-69-843A	1				
69-844		UNIT,DRIVE			
FB03-69-844A	1				
69-845		DEFLECTOR			
FB03-69-845	1				
69-846		LINK(R),DEFLECTOR			
FB03-69-846B	1				
69-846Z		LINK(L),DEFLECTOR			
FB03-69-847B	1				
69-848		MOTOR,SLIDING ROOF			
FB03-69-848B	1				
69-851A		BRACKET,SET-S. ROOF FRAME			
FB03-69-849	4				
69-857B		RELAY,SLIDING ROOF			
FB03-69-857A	1				
69-858A		HARNESS,SLIDING ROOF			
FB03-69-858	1				
69-860		TRIM,SLIDING ROOF			
FB03-69-860C	1				
02	INT-	FD8 BLACK			
48	INT-	FD9 BLUE			
69-865A		SHUTTING(R),SLIDING ROOF			
FB03-69-865	1				

6330 -3 SUNROOF (COUPE)

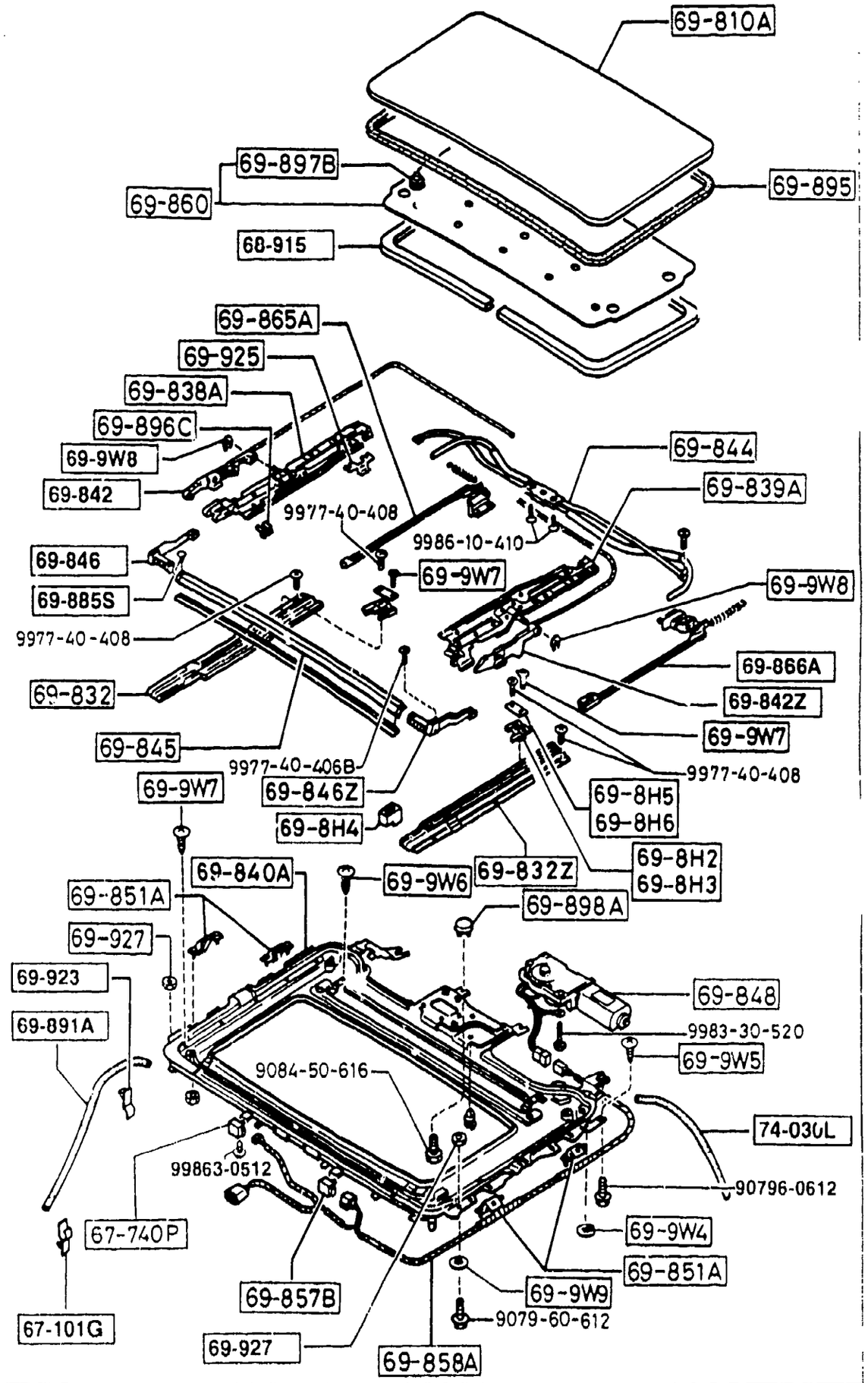

PART NO.	QTY	MODEL/RESTRICTION	MODEL/RESTRICTION	MODEL/RESTRICTION	FROM-TO
69-866A FB03-69-866	1	SHUTTING(L),SLIDING ROOF			
69-885S FB03-69-885	2	CLIP,DEFLECTOR LINK			
69-891A FB03-69-891A	2	HOSE,DRAIN-SUN ROOF FRONT			
69-895 FB03-69-895B A (FB03-69-895C)	1	WEATHERSTRIP.S/ROOF			-1511
FB03-69-895C	1				1511-
69-896C FB03-69-896A	6	SHIM,LOWER PANEL FRONT			
69-897B FB03-69-897	6	FASTENER,TRIM-SLIDE ROOF			
69-898A FB03-69-898	1	COVER,MOTOR-SLIDING ROOF			
02	INT-	FD8 BLACK			
48	INT-	FD9 BLUE			
69-9W4 FB03-69-9W4	4	RING'A',SNAP-LOWER UNIT			
69-9W5 FB03-69-9W5	2	SCREW,TAPPING-LOWER UNIT			
69-9W6 FB03-69-9W6	4	SCREW'A',LOWER UNIT-S/R			
69-9W7 FB03-69-9W7	4	SCREW'B',LOWER UNIT-S/R			
69-9W8 FB03-69-9W8	2	RING'B',SNAP-LOWER UNIT			

1511 FC3***-907424

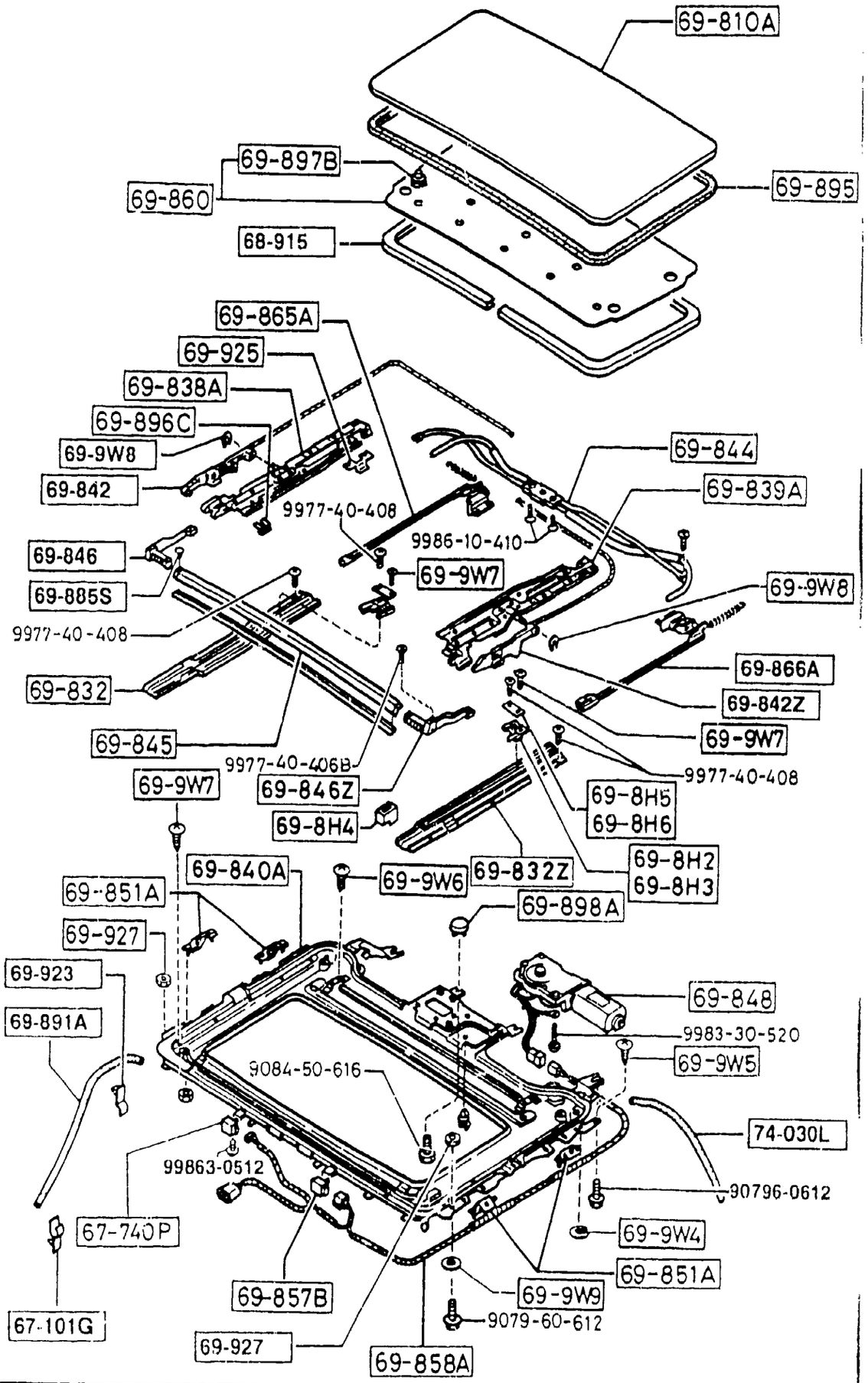

AUFA03

6330 -4 * SUNROOF
(COUPE)

PART NO.	QTY	MODEL/RESTRICTION	MODEL/RESTRICTION	MODEL/RESTRICTION	FROM-TO
69-9W9 FB03-69-9W9	8	WASHER,LOWER UNIT-S/ROOF			
69-923 FB03-69-923	2	CLIP,DRAIN HOSE-SUN ROOF			
69-925 FB03-69-925A	4	SHIM,LOWER PANEL REAR			
69-927 FB03-69-927	4	NUT,ADJUST-S/ROOF FRAME			
74-030L FB03-69-892A	2	HOSE,DRAIN-REAR			

CAT. AUFA03-07

1993-12

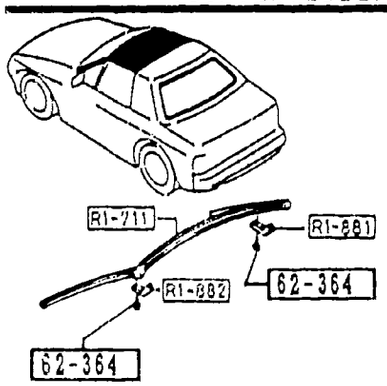

CEILING TRIMS
(REFER TO SECT.NO.6800)

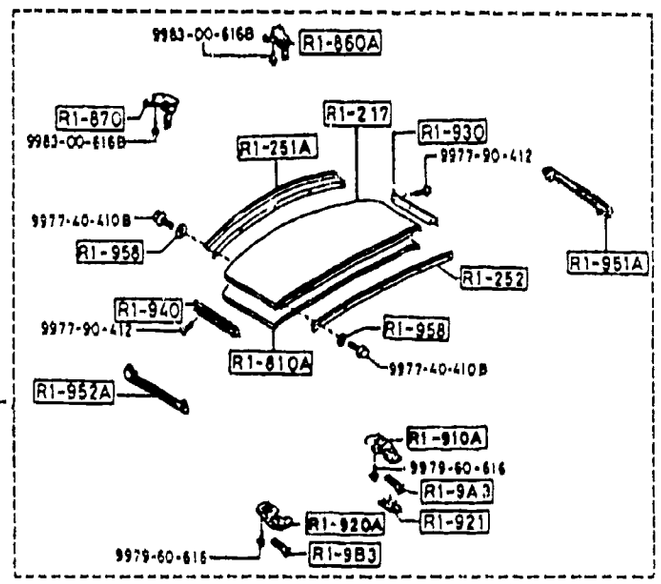

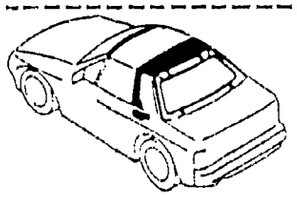

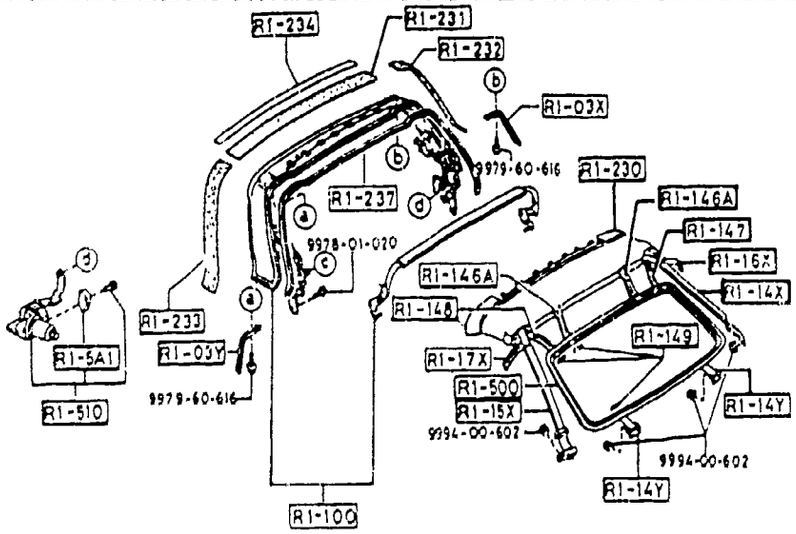

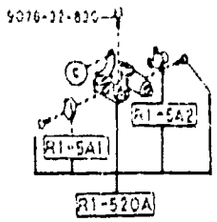

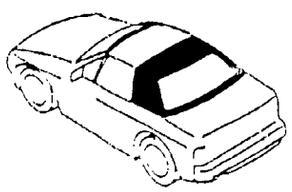

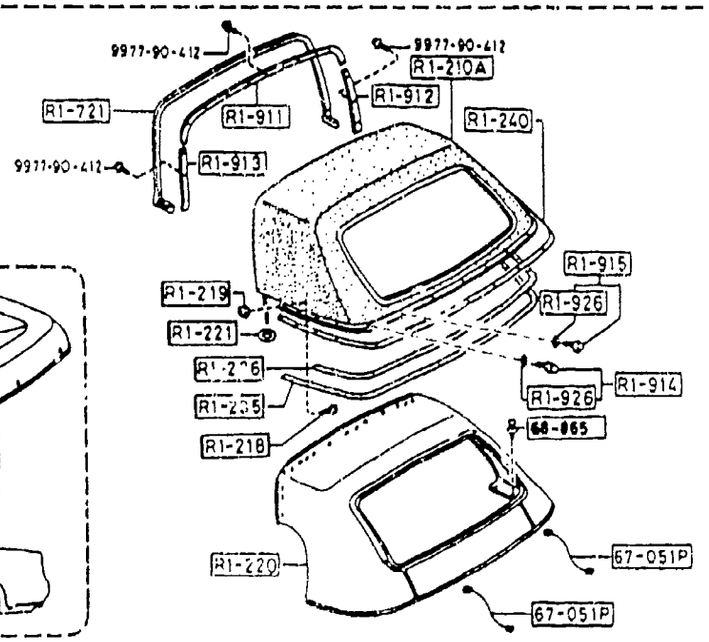

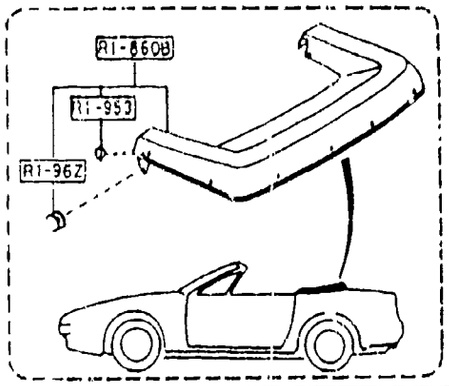

AUFA03

PART NO.	QTY	MODEL/RESTRICTION	MODEL/RESTRICTION	MODEL/RESTRICTION	FROM-TO
R1-03X FB67-R1-03X	1	BRKT(R),BELT-FORMING			
R1-03Y FB67-R1-03Y	1	BRKT(L),BELT-FORMING			
R1-100 FB67-R1-100	1	BAR,FORMING-SOFT TOP			
R1-14X FB67-R1-14X	1	BELT'A'(R),CORNER-SOFTTOP			
R1-14Y FB67-R1-14Y	2	BELT'C',BACK WINDOW			
R1-146A FB67-R1-146A	2	BELT'A',BACK WINDOW			
R1-147 FB67-R1-147A	1	BELT'B'(R),BACK WINDOW			
R1-148 FB67-R1-148A	1	BELT'B'(L),BACK WINDOW			
R1-149 FB67-R1-149	6	PIN,BELT-BACK WINDOW			
R1-15X FB67-R1-15X	1	BELT'A'(L),CORNER-SOFTTOP			
R1-16X FB67-R1-16X	1	BELT'B'(R),CORNER-SOFTTOP			
R1-17X FB67-R1-17X	1	BELT'B'(L),CORNER-SOFTTOP			
R1-210A FCZ3-R1-210	1	FABRIC,TOP-SOFT TOP			
R1-217 FC33-R1-217	1	FABRIC COVERING,ROOF PANEL			

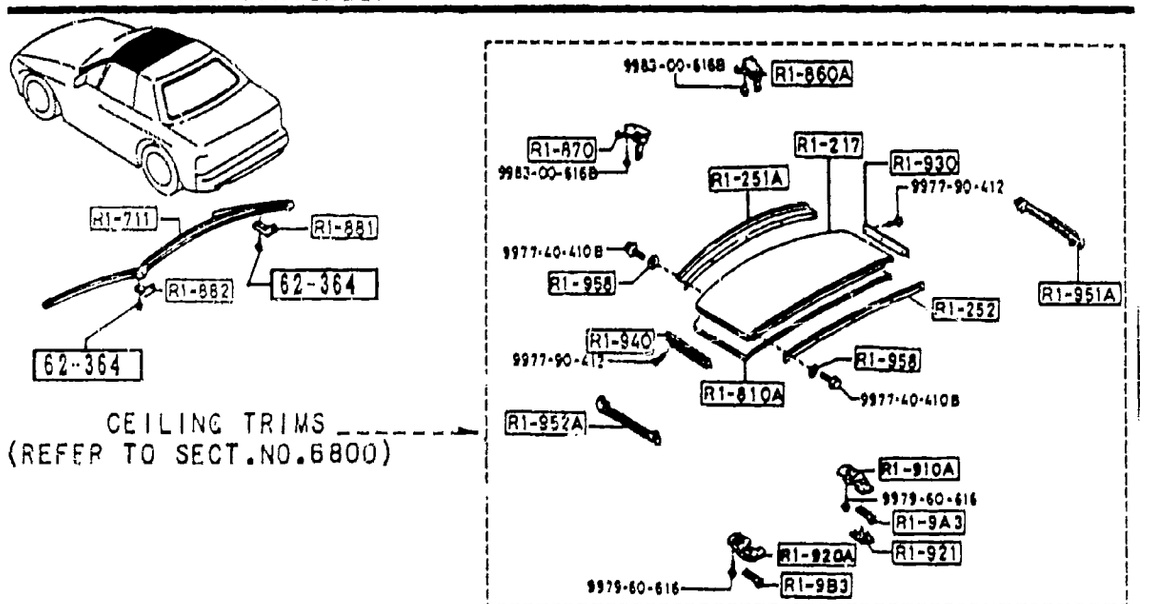

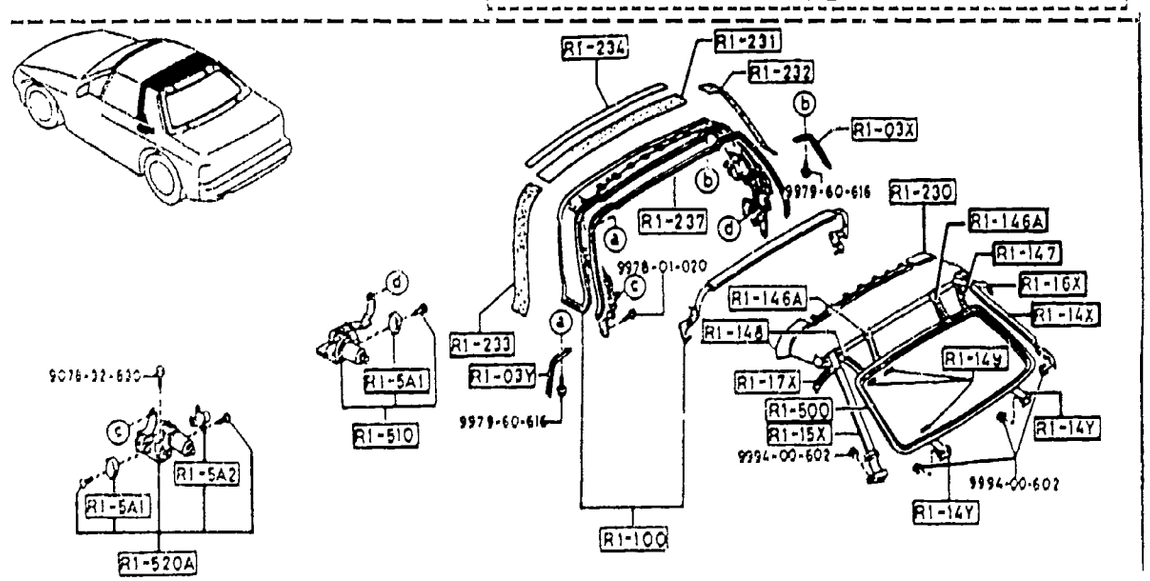

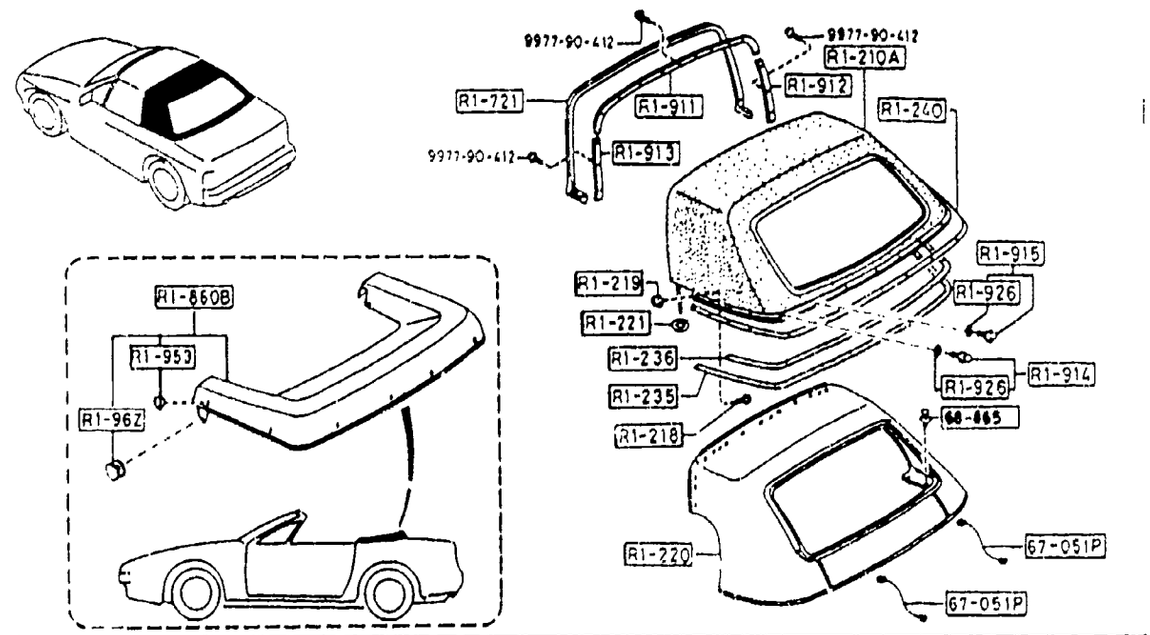

PART NO.	QTY	MODEL/RESTRICTION	MODEL/RESTRICTION	MODEL/RESTRICTION	FROM-TO
R1-218		BOLT,HOOD OUTER			
FB67-R1-218	2				
R1-219		NUT,HOOD OUTER			
FB67-R1-219	2				
R1-220		LINER,HEAD-SOFT TOP			
FB67-R1-212C	1				
02	INT-	FD8 FE1 BLACK			
48	INT-	FD9 BLUE			
R1-221		PLUG,DRAIN HOSE-RR F LOOR			
FB67-R1-221	2				
R1-230		INSULATOR,TOP CEILIN G			
FB67-R1-213	1				
R1-231		PAD(CTR),SPACER-SOFT TOP			
FB67-R1-231	1				
R1-232		PAD(R),SPACER-SOFT T OP			
FB67-R1-232	1				
R1-233		PAD(L),SPACER-SOFT T OP			
FB67-R1-233	1				
R1-234		PLATE,FRONT-SOFT TOP			
FB67-R1-234	1				
R1-235		TAPE'A',SEAL-TOP FAB RIC			
FB67-R1-235	1				
R1-236		TAPE'B',SEAL-TOP FAB RIC			
FB67-R1-236	1				
R1-237		PROTECTOR,FORMING BA R			
FB67-R1-237A	1				
R1-240		PLATE,SET-HOOD REAR			
FB67-R1-214A	1				

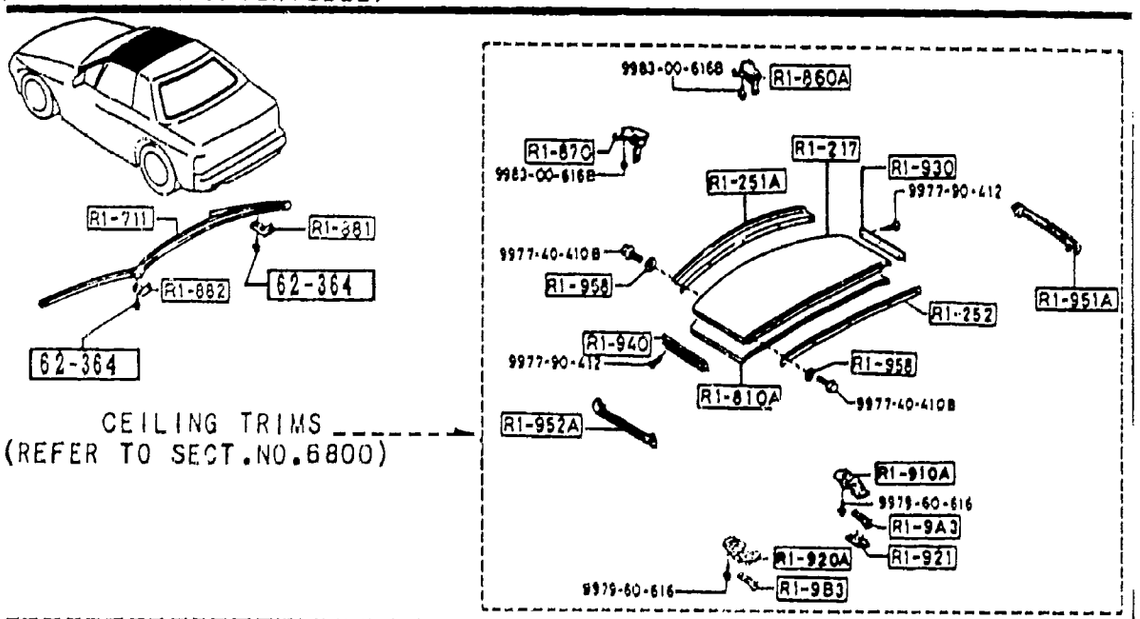

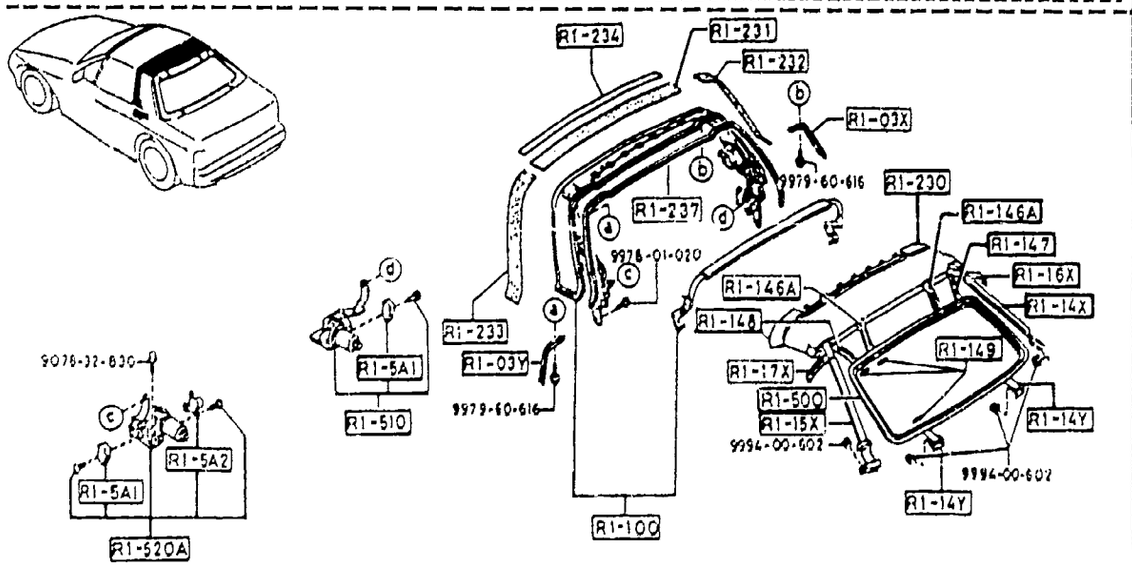

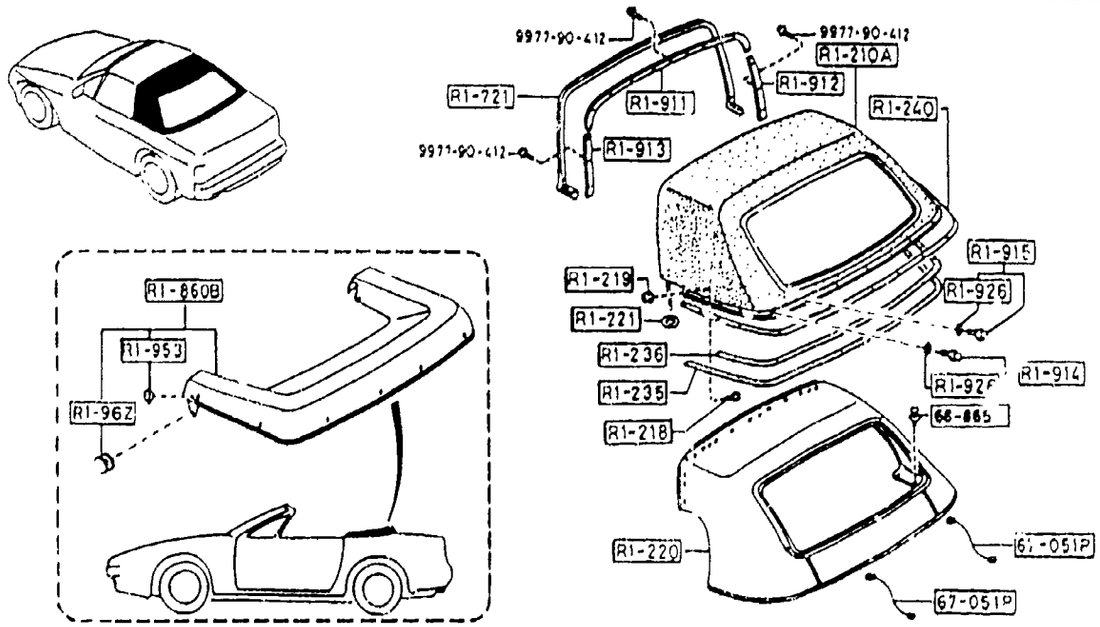

AUFA03

PART NO.	QTY	MODEL/RESTRICTION	MODEL/RESTRICTION	MODEL/RESTRICTION	FROM-TO
R1-251A		PLATE(FRT),SET-ROOF PANEL			
FB67-R1-251	1				
R1-252		PLATE(RR),SET-ROOF PANEL			
FB67-R1-252	1				
R1-5A1		SWITCH,LIMIT-TOP MOTOR			
FB67-R1-5A1	2				
R1-5A2		BUZZER,TOP MOTOR			
FB67-R1-5A2	1				
R1-500		FRAME,BACK WINDOW			
FB67-R1-421A AN(FB67-R1-421B)	1				-2101
FB67-R1-421B	1				2101-
R1-510		MOTOR(R),TOP			
FB67-R1-510D	1				
R1-520A		MOTOR(L),TOP			
FB67-R1-520B	1				
R1-711		WTHSTP,FRONT HEADER			
FB67-R1-711E	1	('91 MODEL)			
FB67-R1-711F	1	('92 MODEL)			
R1-721		WTHSTP.,HOMING BAR-FRONT			
FB67-R1-721E	1				
R1-810A		PANEL,ROOF			
FB67-R1-810H	1	LESS OUTER CLOTH			
R1-860A		LOCK(R),TOP			
FB67-R1-860D	1				
R1-860B		BOOT,TOP			
FB67-R1-960G	1				
02	INT-	FD8 FE1 BLACK			
48	INT-	FD9 BLUE			

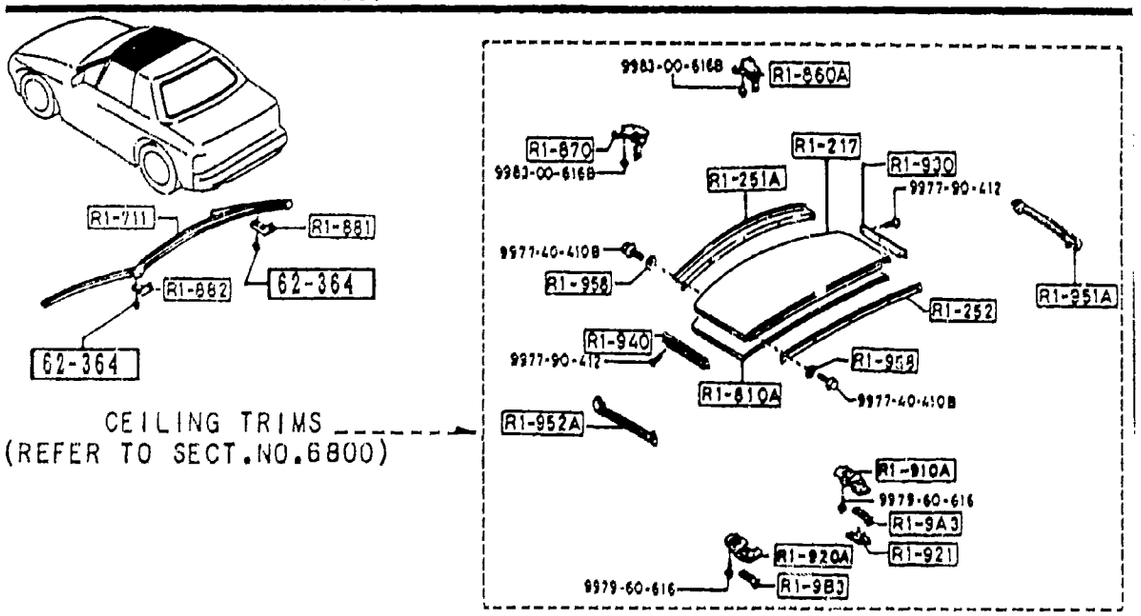

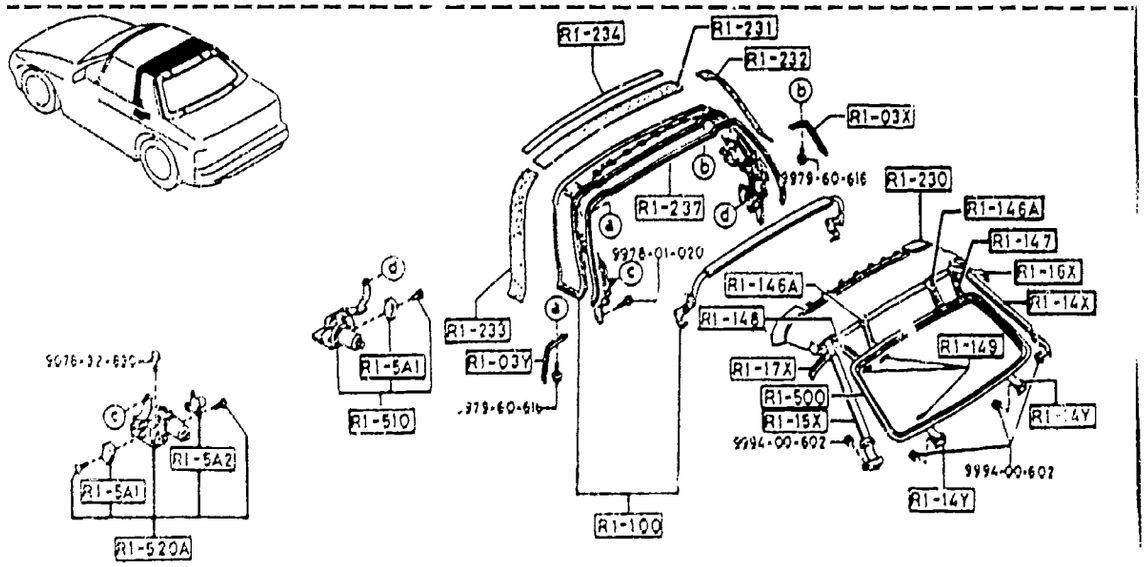

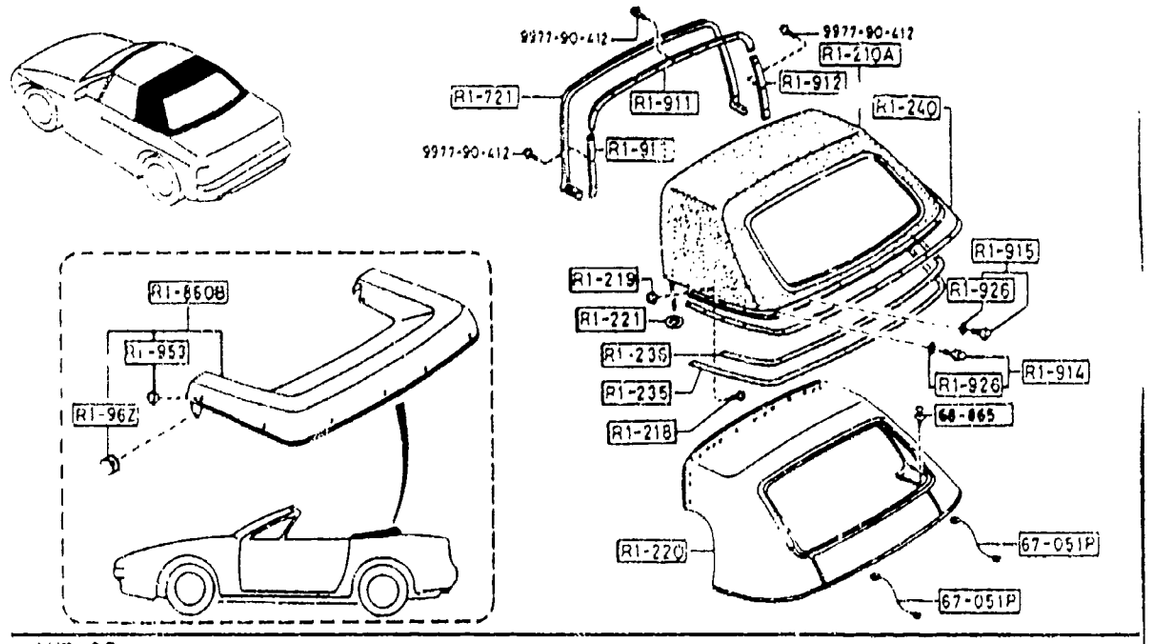

AUFA03

PART NO.	QTY	MODEL/RESTRICTION	MODEL/RESTRICTION	MODEL/RESTRICTION	FROM-TO
R1-870		LOCK(L),TOP			
FB67-R1-870D	1				
R1-881		STRIKER(R),LOCK-TOP			
FB67-R1-881C	1				
R1-882		STRIKER(L),LOCK-TOP			
FB67-R1-882C	1				
R1-9A3		BRACKET(R),HINGE-ROOF			
FB67-R1-9A3A	1				
R1-9B3		BRACKET(L),HINGE-ROOF			
FB67-P1-9B3A	1				
R1-910A		LOCK(R),HINGE-TOP			
FB67-R1-910H	1				
02	INT-	FD8 FE1 BLACK			
48	INT-	FD9 BLUE			
R1-911		RETAINER(C),FORMING BAR			
FB67-R1-911A	1				
R1-912		RETAINER(R),FORMING BAR			
FB67-R1-912A	1				
R1-913		RETAINER(L),FORMING BAR			
FB67-R1-913A	1				
R1-914		HOOK'A',HOOD			
FB67-R1-91YC	8				
R1-915		HOOK'B',HOOD			
FB67-R1-91ZC	5				
R1-920A		LOCK(L),HINGE-TOP			
FB67-R1-920E	1				
R1-921		COVER,KNOB-HINGE			
FB67-R1-921A	1				

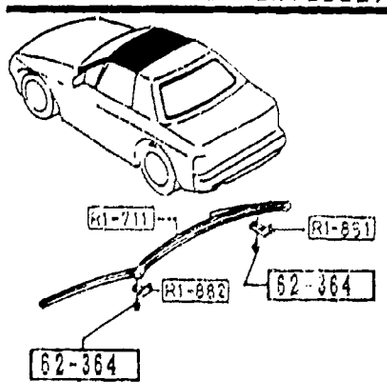

CEILING TRIMS
(REFER TO SECT.NO.6800)

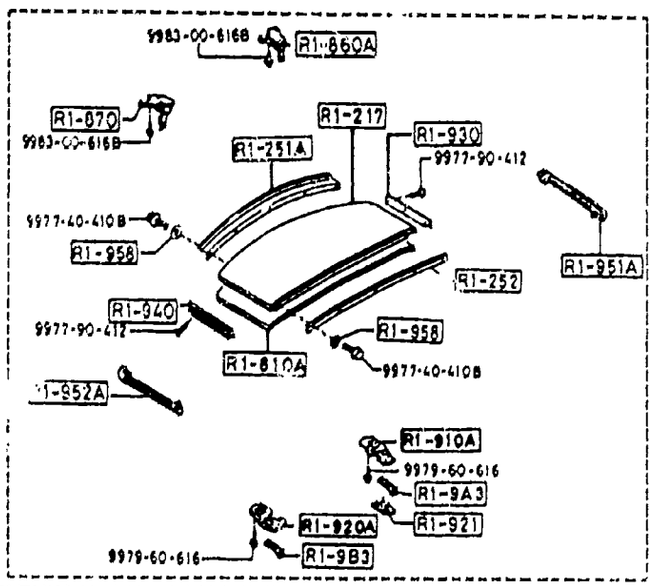

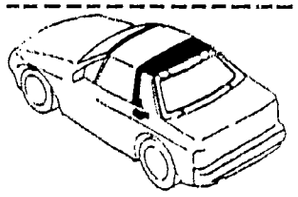

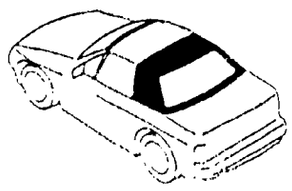

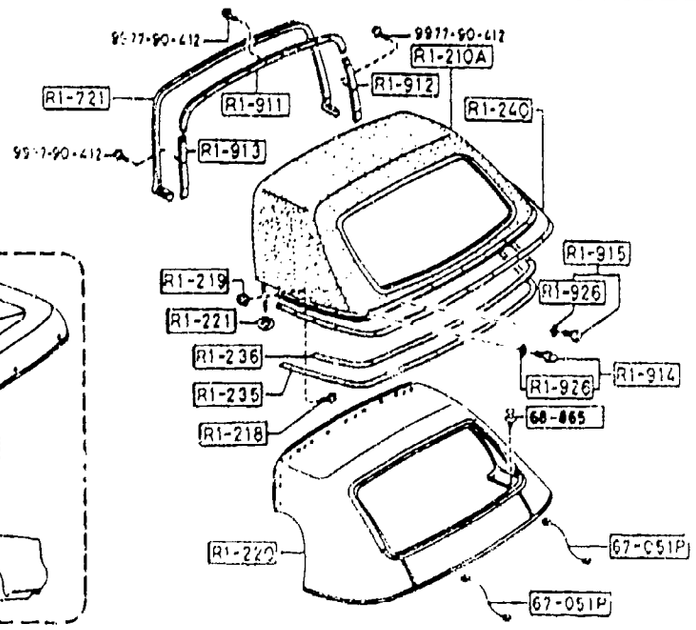

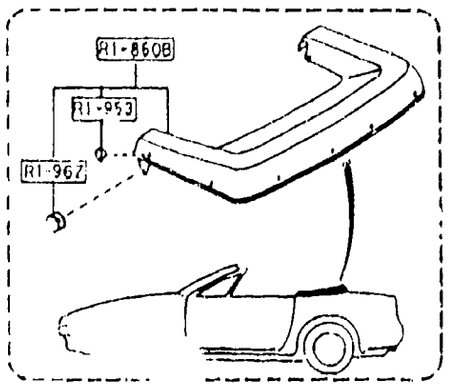

PART NO.	QTY	MODEL/RESTRICTION	MODEL/RESTRICTION	MODEL/RESTRICTION	FROM-TO
CONT'D					
02	INT-	FD8 FE1 BLACK			
48	INT-	FD9 BLUE			
R1-926		WASHER,HOOK-HOOD COVER			
FB67-R1-926A	13				
R1-930		RETAINER(R),ROOF PANEL			
FB67-R1-930A	1				
R1-940		RETAINER(L),ROOF PANEL			
FB67-R1-940A	1				
R1-951A		WTHSTP(R),ROOF PANEL			
FC54-R1-951B	1				
R1-952A		WTHSTP(L),ROOF PANEL			
FC54-R1-952B	1				
R1-953		HOOK,HOOD-REAR CORNER			
B235-R1-953	12				
R1-958		WASHER,HOOK'A'&'B'			
B235-R1-958A	10				
R1-96Z		HOOK,TOP BOOT			
NA01-R1-96Z	6				
00	INT-	FD8 FD9 FE1 BLACK			
62-364		SCREW,STRIKER			
FB67-R1-222	4				
67-051P		HARNESS,REAR DEFFOGER			
FB67-67-060A	2				
68-865		FASTENER			
*B042-68-865	13				
* 00	INT-	FD8 FD9 FE1 BLACK			

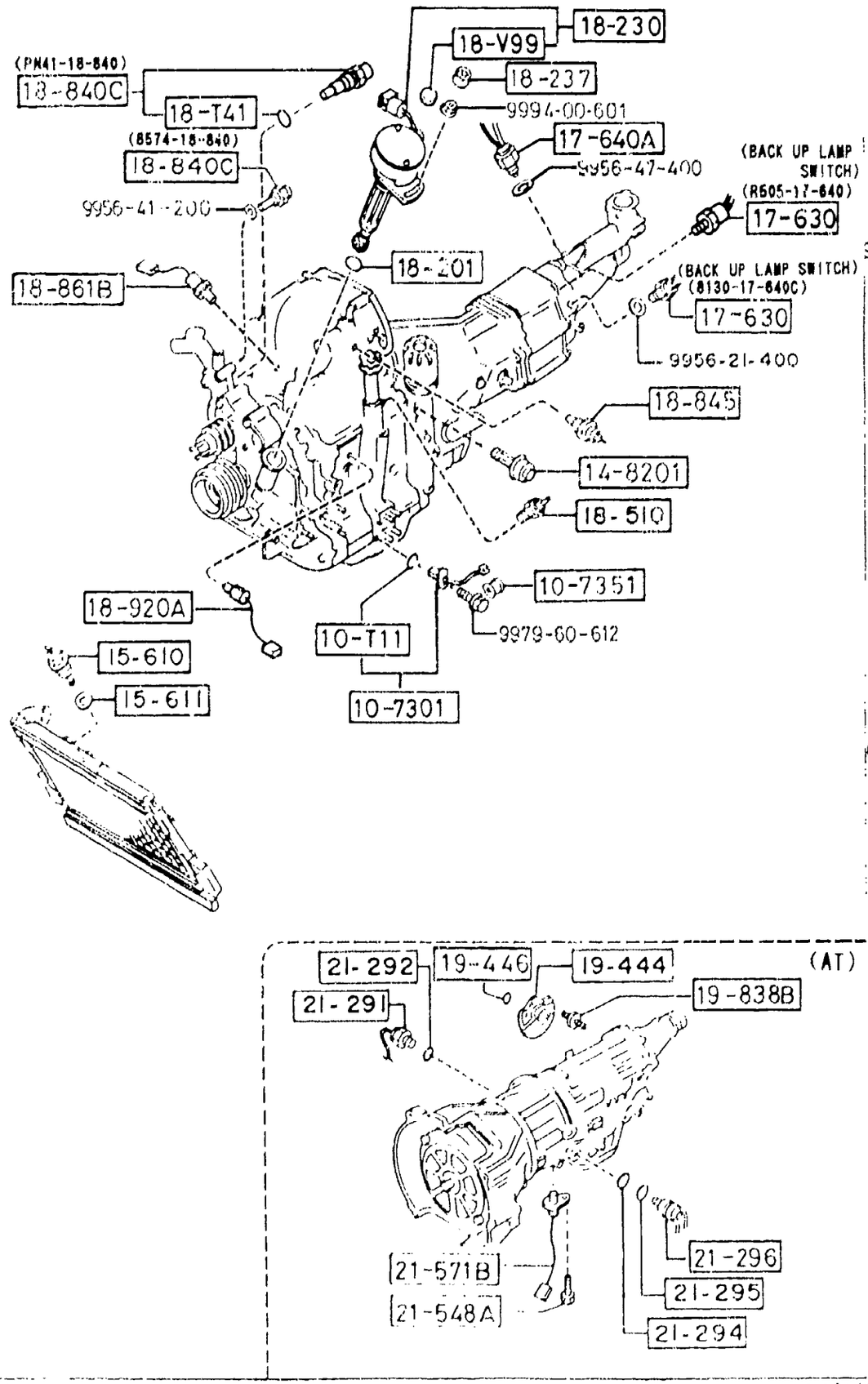

AUFA03

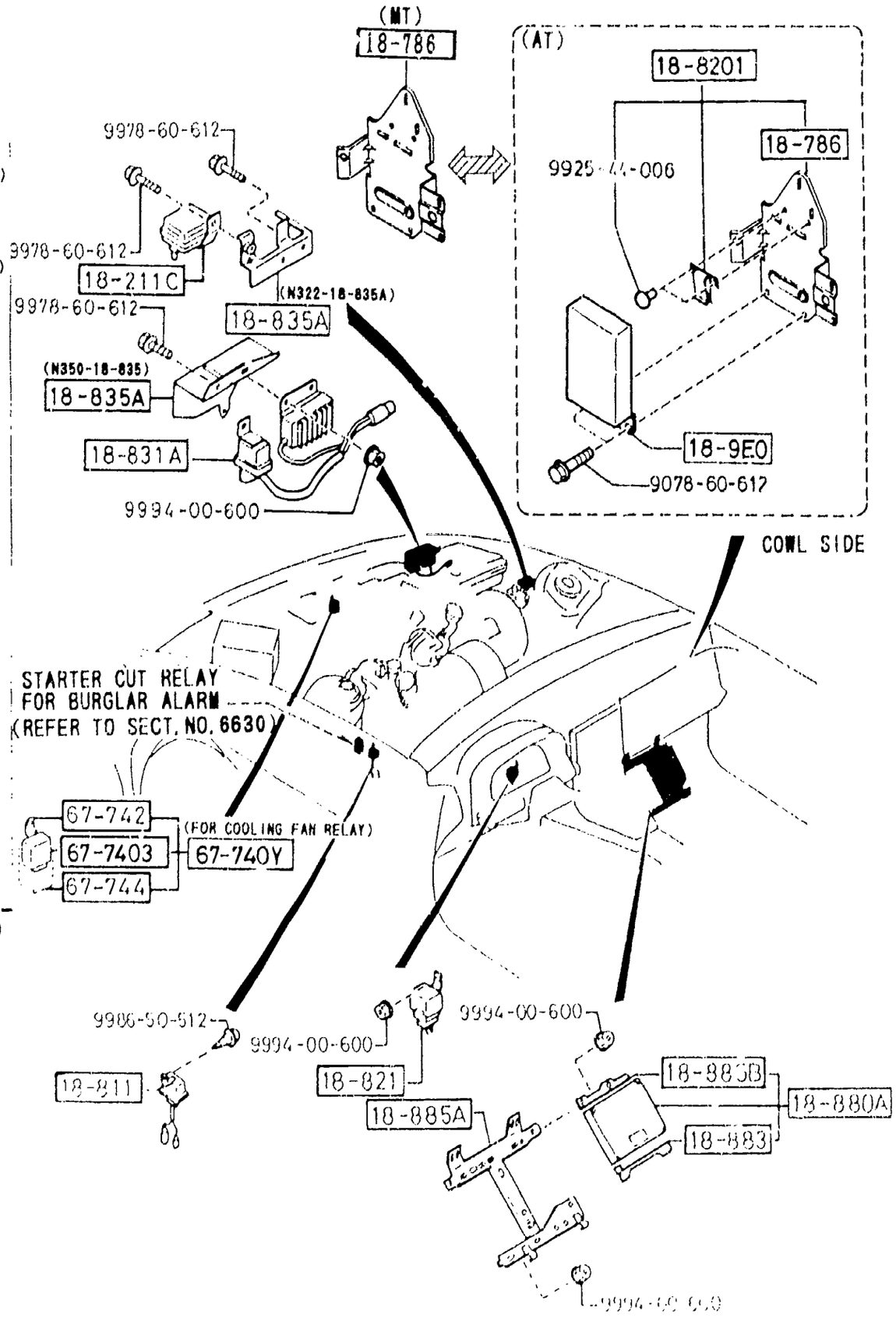

(CONT'D) AUFA03

(THIS ILLUSTRATION CONSISTS OF 2 PAGES)

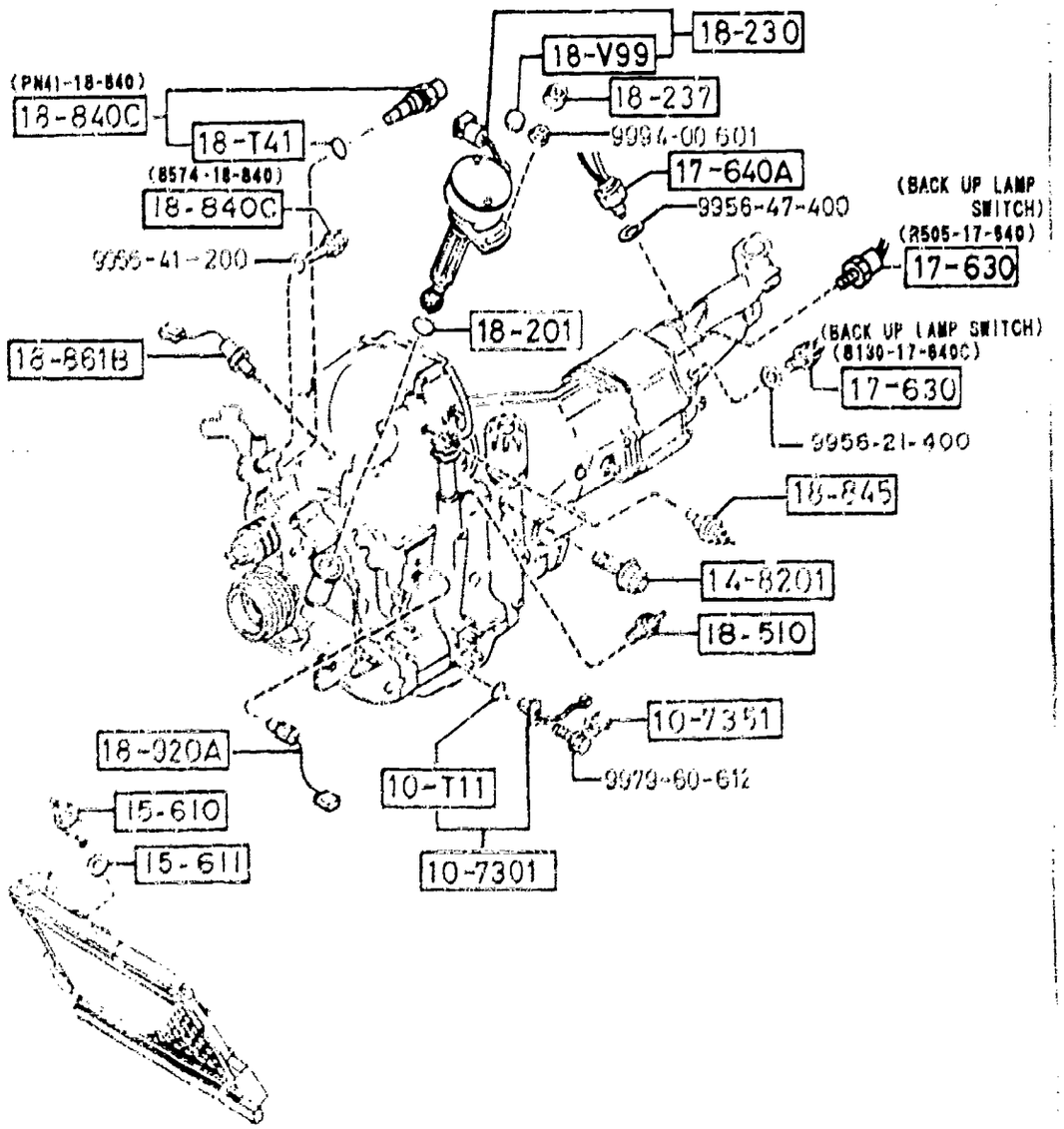

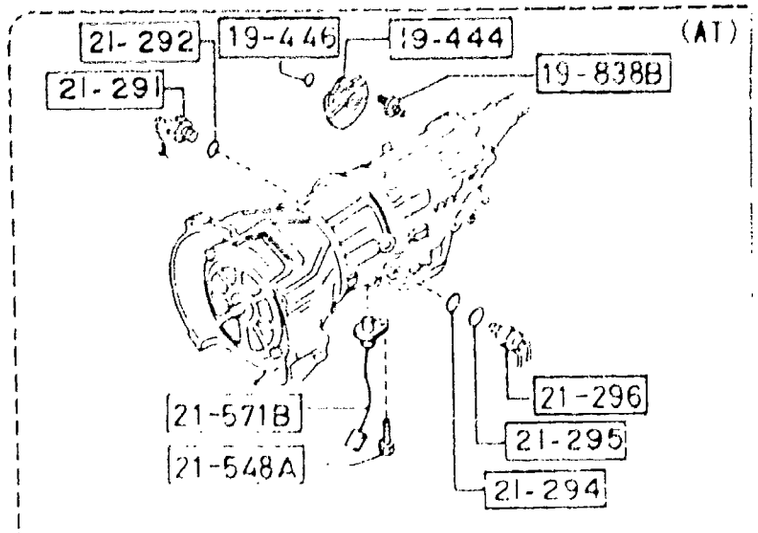

(CONT'D)

PART NO.	QTY	MODEL/RESTRICTION	MODEL/RESTRICTION	MODEL/RESTRICTION	FROM-TO
10-T11		RING,'O'-OIL LEVEL SENSOR			
N326-10-T11	1				
10-7301		SENSOR,OIL LEVEL			
N326-10-470	1				
10-7351		PROTECTOR			
N231-10-735	1				
14-8201		GAUGE UNIT,OIL PRES.			
N201-14-820	1				
15-610		SENSOR,WATER LEVEL			
N337-15-610	1				
15-611		GASKET			
8553-15-611	1				
17-630		SWITCH			
R505-17-640	1	(TURBO)			
8130-17-640C	1	((W/O TURBO))(MT))			
17-640A		SWITCH,PARK & NEUTRAL			
M502-17-640C	1	(MT)			
18-T41		RING,'O'-WATER THERMO SW.			
F8B5-18-T41	1	((W/O TURBO))(AT)) ((TURBO))(MT))			
18-V99		CAP,BLIND-CRANK ANGLE SEN			
N326-18-V99	1				
18-201		RING,'O'			
99541-03501	1				
18-211C		SENSOR,M.A.P.			
N350-18-211	1	(W/O TURBO)			
N370-18-211	1	(TURBO)			
18-230		SENSOR,CRANKSHAFT POSI.			
N326-18-230	1				

(THIS ILLUSTRATION CONSISTS OF 2 PAGES)

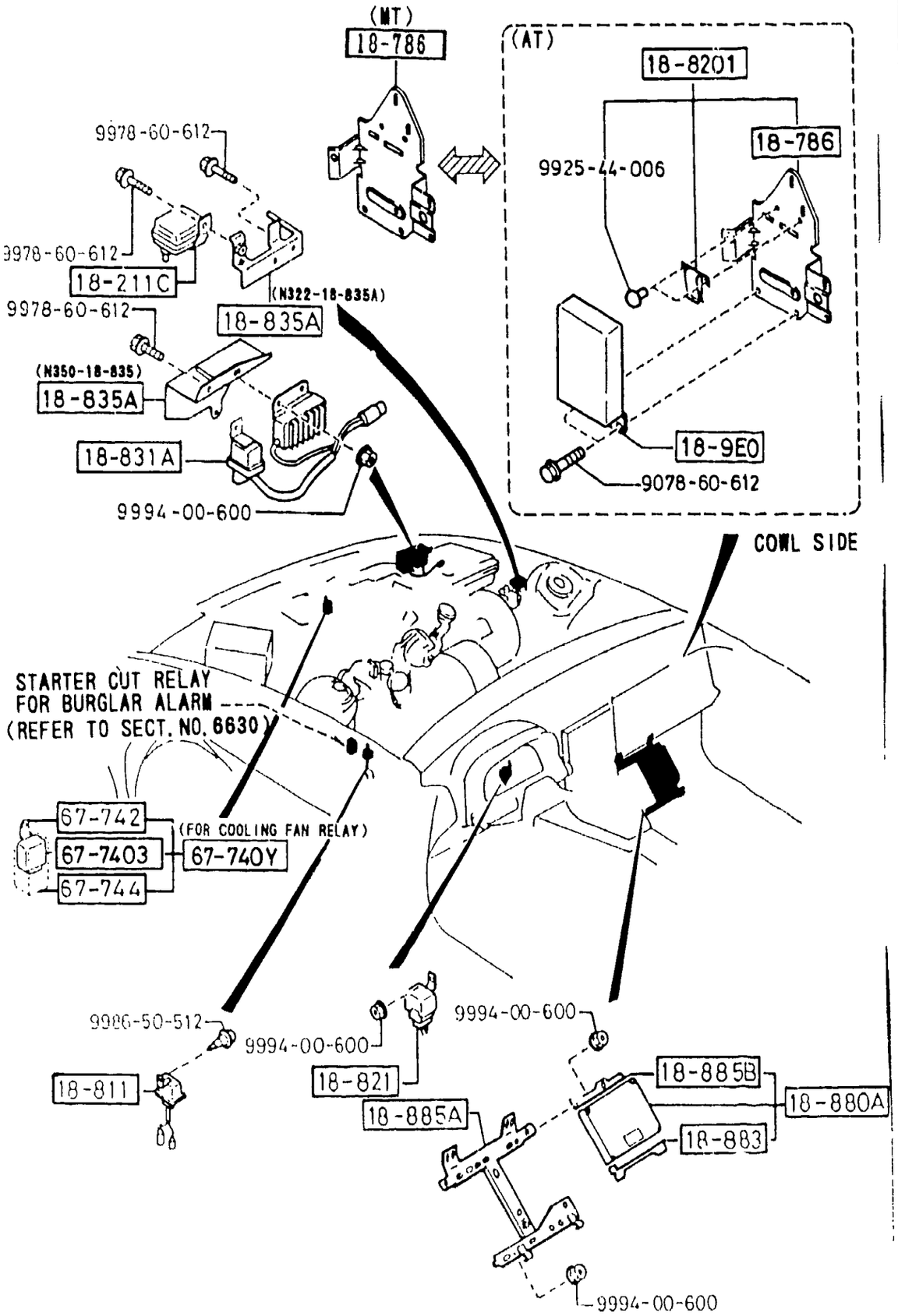

AUFA03

6600 -2 SWITCHES & RELAYS (ENGINE)

PART NO.	QTY	MODEL/RESTRICTION	MODEL/RESTRICTION	MODEL/RESTRICTION	FROM-TO
18-237		CAP,CRANK ANGLE SENSOR			
N326-18-237	1				
18-510		UNIT,HEAT GAUGE			
JE15-18-51X	1	PANASONIC			
18-786		BRACKET,CONTROL UNIT			
N361-18-946A	1				
18-811		RELAY,MAIN			
N350-18-811	1				
18-8201		BRACKET,CONTROL UNIT			
N361-18-945B	1	(AT)			
18-821		RELAY,FUEL PUMP			
N326-18-821A	1				
18-831A		RESISTOR,SOL.-FUEL PUMP			
N374-18-831	1				
18-835A		BRACKET			
N322-18-835A	1				
N350-18-835	1				
18-840C		SENSOR,TEMP.-ENG.COOLANT			
PN41-18-840	1	DENSO ((W/O TURBO)>(AT)) ((TURBO)>(MT))			
8574-18-840	1	DENSO			
18-845		SENSOR,IN.AIR TEMP			
N326-18-845	1				
18-861B		SENSOR,OXYGEN			
N350-18-861	1	(W/O TURBO)			
18-880A		MODULE,POWERTRAIN CONTROL			
N350-18-880	1	(W/EM LABEL-CALIF.) ((W/O TURBO)>(CPE,)			

CAT. AUFA03-07

1993-12

(THIS ILLUSTRATION CONSISTS OF 2 PAGES)

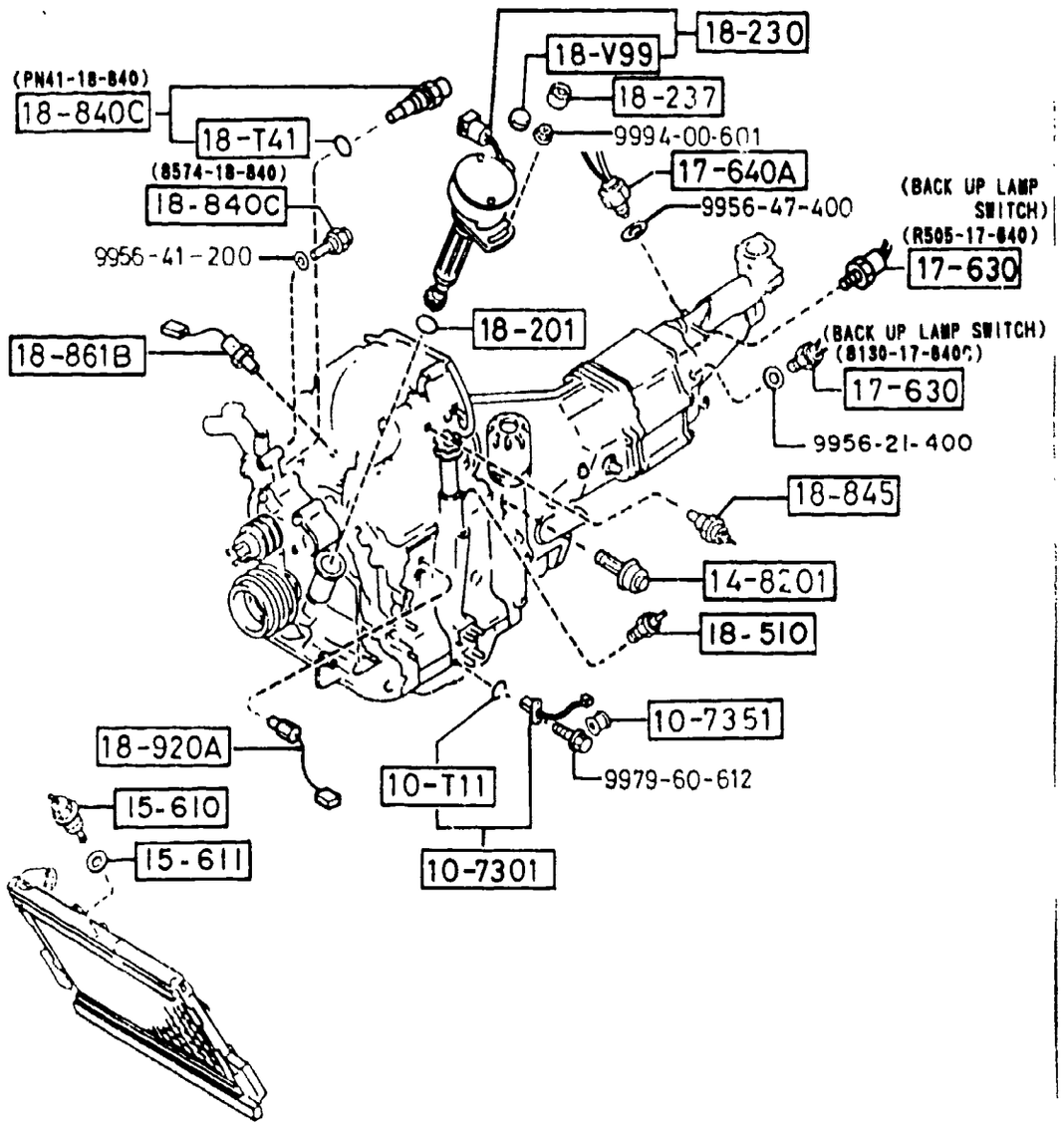

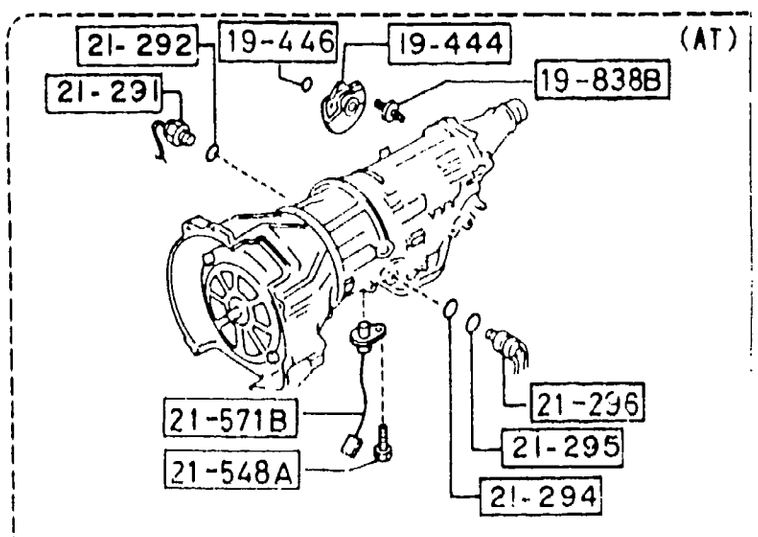

PART NO.	QTY	MODEL/RESTRICTION	MODEL/RESTRICTION	MODEL/RESTRICTION	FROM-TO
CONT'D					
N351-18-880	1	(W/EM LABEL-FED.) ((W/O TURBO)>(CPE))			
N352-18-880	1	(W/EM LABEL-CALIF.) ((W/O TURBO)>(CONVERTIBLE)>('91 MODEL))			
N353-18-880	1	(W/EM LABEL-FED.) ((W/O TURBO)>(CONVERTIBLE)>('91 MODEL))			
N3B1-18-881	1	(W/EM LABEL-FED.) ((W/O TURBO)>(CONVERTIBLE)>('92 MODEL))			
N3B3-18-881	1	(W/EM LABEL-CALIF.) ((W/O TURBO)>(CONVERTIBLE)>('92 MODEL))			
N370-18-880 A (N370-18-880A)	1				-0823
N370-18-880A	1	(TURBO)			0823-
18-883		BRACKET,CONTROL UNIT			
N326-18-883	1				
18-885A		BRACKET,CONTROL UNIT			
N326-18-885A	1	(CPE)			
N387-18-885A	1	(CONVERTIBLE)			
18-885B		BRACKET,CONTROL UNIT			
HE21-18-885A	1				
18-9E0		MODULE,PWT.CONTROL			
N351-18-9E1B A (N351-18-9E1C)	1				-0903
N351-18-9E1C	1	(AT)			0903-
18-920A		SENSOR,KNOCK			
N318-18-921	1	(TURBO)			
19-444		SWITCH,INHIBITOR			
BV09-19-444	1	(AT)			
19-446		RING,'O'			
0338-19-446	1	(AT)			
19-838B		BOLT			
BU17-19-838	2				-1301

0823 FC3***-900742
0903 FC3***-901338
1301 FC3***-906890

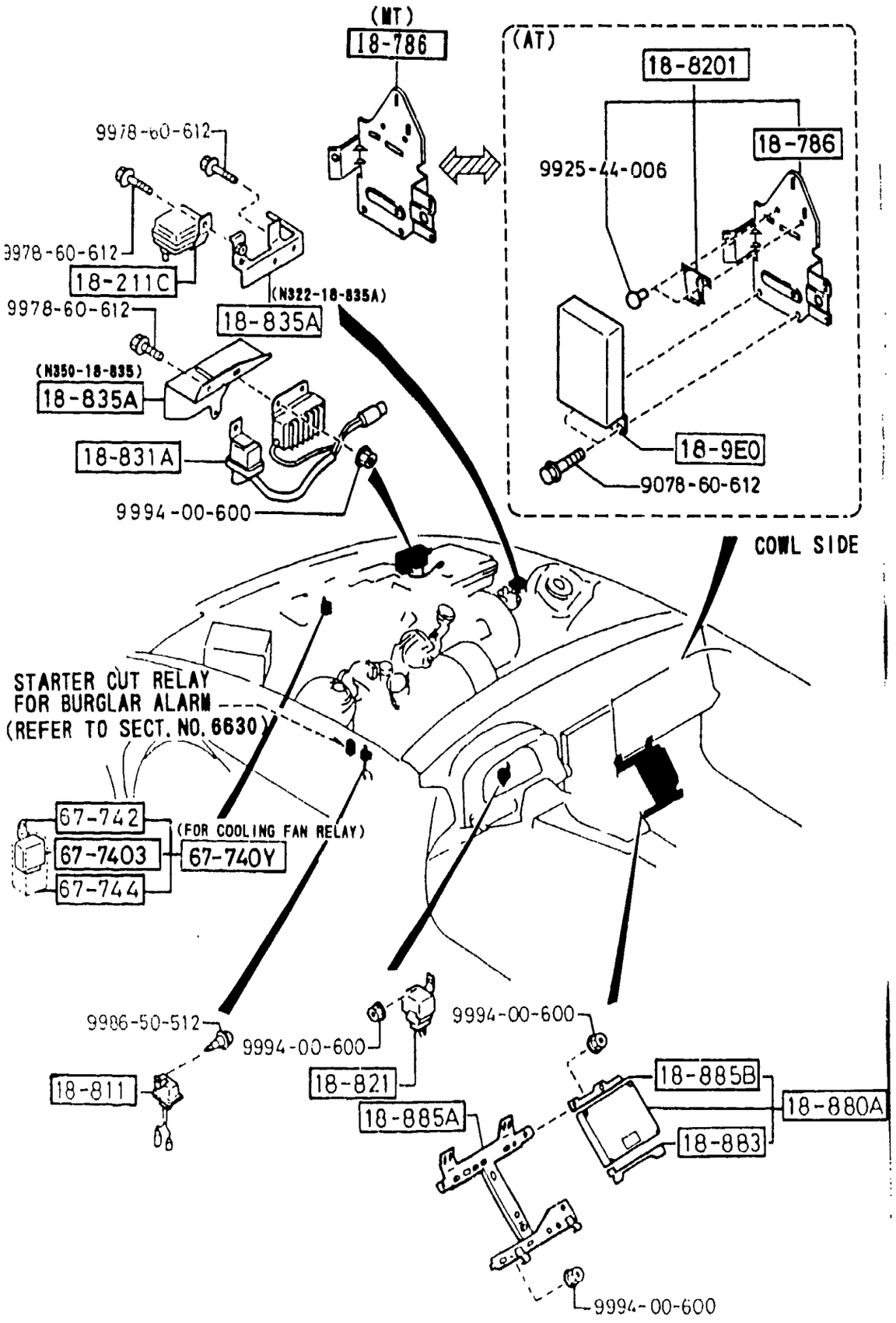

PART NO.	QTY	MODEL/RESTRICTION	MODEL/RESTRICTION	MODEL/RESTRICTION	FROM-TO
CONT'D A (BU17-19-838A)					
BU17-19-838A	2	(AT)			1301-
21-291		SWITCH,OIL PRESSURE			
BV09-21-2J1	1	(AT)			
21-292		RING,'O'			
BU01-21-292A	1	(AT)			
21-294		RING,'O'			
BU01-21-294	1	(AT)			
21-295		RING,'O'			
BU01-21-295	1	(AT)			
21-296		SOLENOID,LOCK UP CONTROL			
BV09-21-3A5	1	(AT)			
21-548A		BOLT			
BV01-21-548	1	(AT)			
21-571B		GENERATOR,SPEED PULSE			
BV09-21-5H1	1	(AT)			
67-740Y		RELAY & COVER,NORMAL OPEN 30A			
H320-67-740	1	(FOR COOLING FAN RELAY) ((W/O TURBO)>(AT)>(CPE)) (TURBO)			
H430-67-740	1	(FOR COOLING FAN RELAY) ((W/O TURBO)>(AT)>(CONVERTIBLE))			
67-7403		RELAY,N.O.			
H270-67-740	1	30A (FOR COOLING FAN RELAY) ((W/O TURBO)>(AT)>(CPE)) (TURBO)			
67-742		BRACKET,RELAY			
H320-67-742	1	(FOR COOLING FAN REL			

1301 FC3***-906890

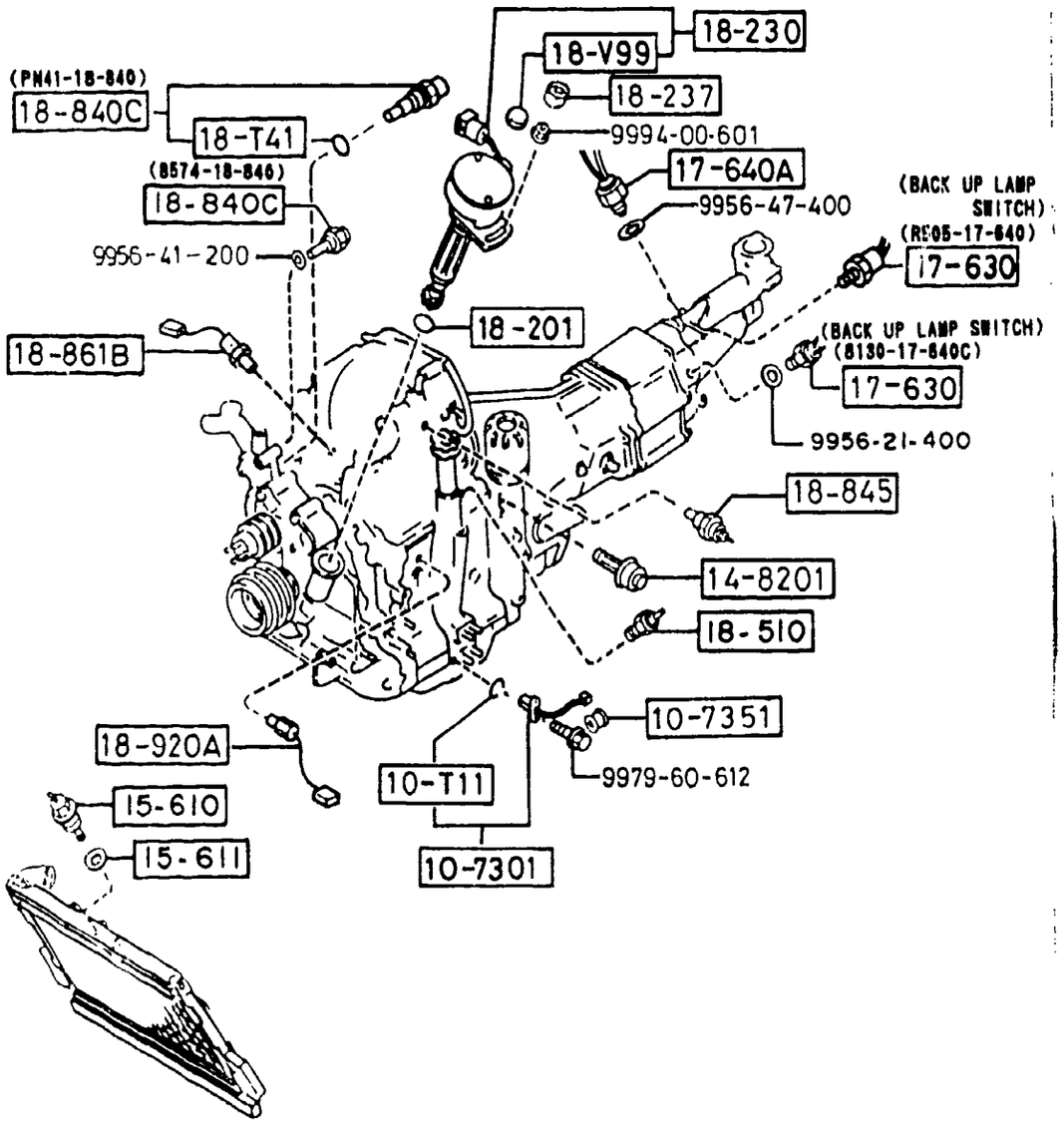

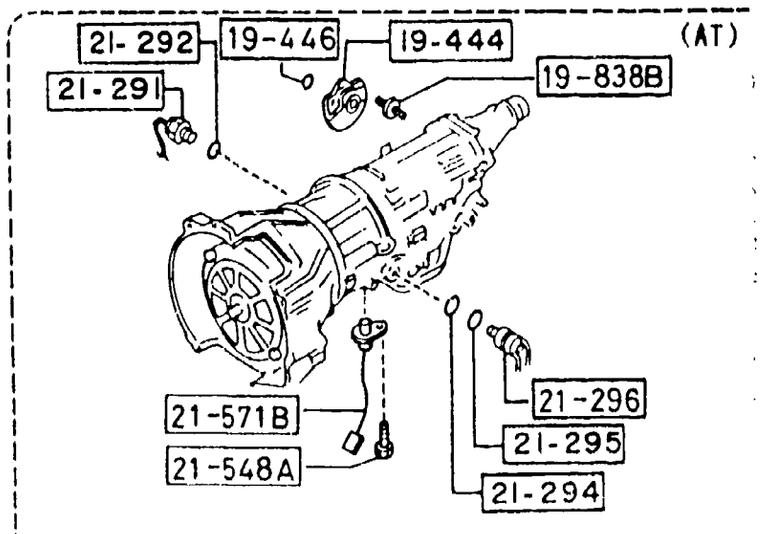

AUFA03 (CONT'D)

6600 -5 * SWITCHES & RELAYS (ENGINE)

PART NO.	QTY	MODEL/RESTRICTION	MODEL/RESTRICTION	MODEL/RESTRICTION	FROM-TO
CONT'D					
		AY) ((W/O TURBO)>(AT)>(CPE)) (TURBO)			
+---------+ | 67-744 | +---------+ H311-67-744	1	BOOT,RELAY-WATER PROOF (FOR COOLING FAN RELAY) ((W/O TURBO)>(AT)>(CPE)) (TURBO)			

6610 DASHBOARD SWITCHES
(CONVERTIBLE)

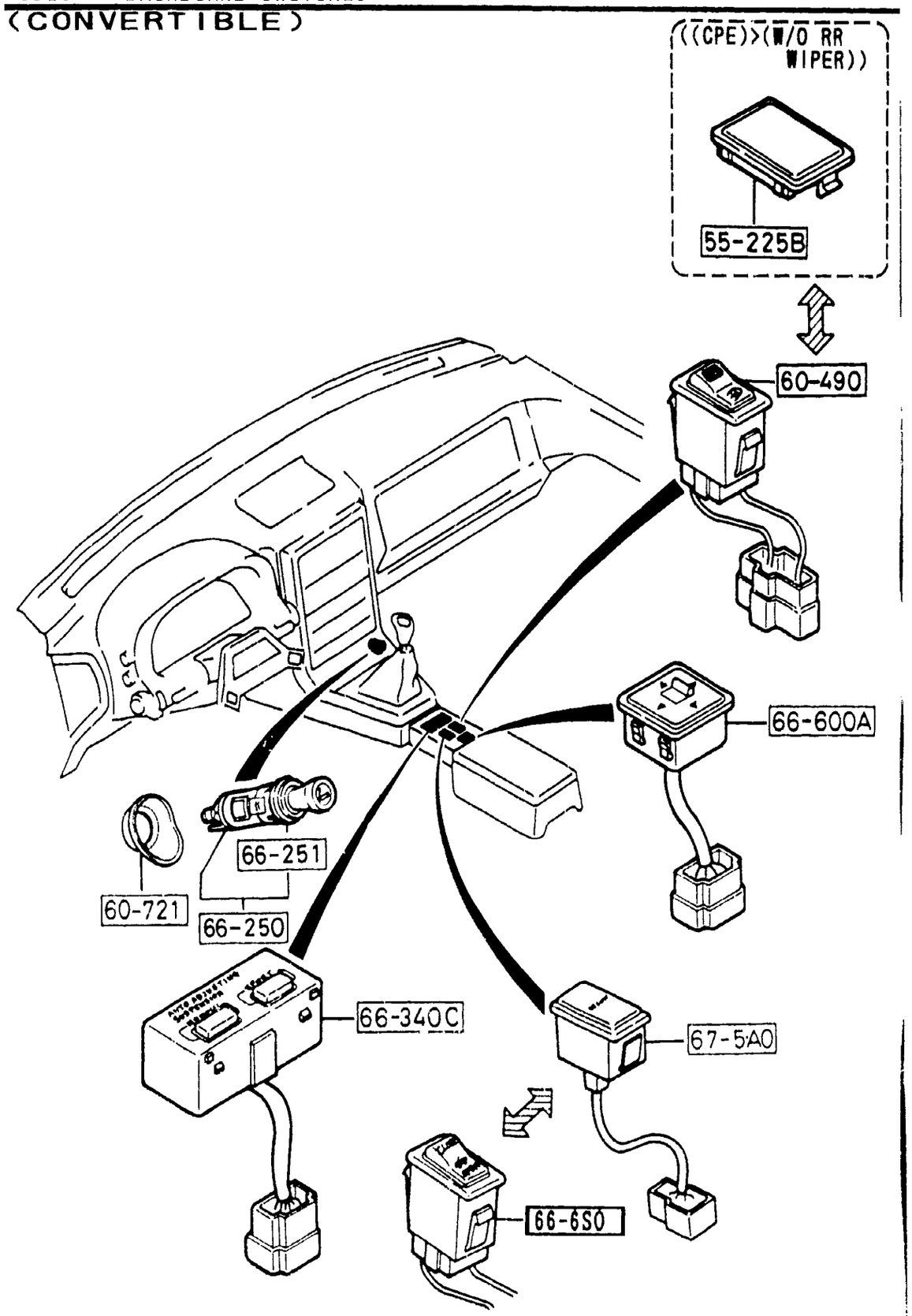

PART NO.	QTY	MODEL/RESTRICTION	MODEL/RESTRICTION	MODEL/RESTRICTION	FROM-TO
55-225B		COVER,HOLE			
B001-55-225A	1	((CPE))(W/O RR WIPER))			
60-490		SWITCH,FOG LAMP			
F044-66-4B0	1	(CONVERTIBLE) ((CPE))(W/RR WIPER))			
60-721		PROTECTOR			
FB01-66-241	1				
66-250		LIGHTER,CIGAR			
FB01-66-250	1				
66-251		RING,ILLUMINATION			
UB40-66-251	1				
66-340C		SWITCH,ADJUSTABLE DAMPER			
FB07-66-340	1	(A.A.SUSP)			
66-6S0		SWITCH,SOFT TOP			
FC66-66-6S0	1	(CONVERTIBLE)			
66-600A		SWITCH,RMT.MIRROR			
FB02-66-600B	1	(CONVERTIBLE)			
67-5A0		DISPLAY,SECURITY-ALARM			
FB01-67-5A0A	1	(W/BURGLAR ALARM) (CPE)			

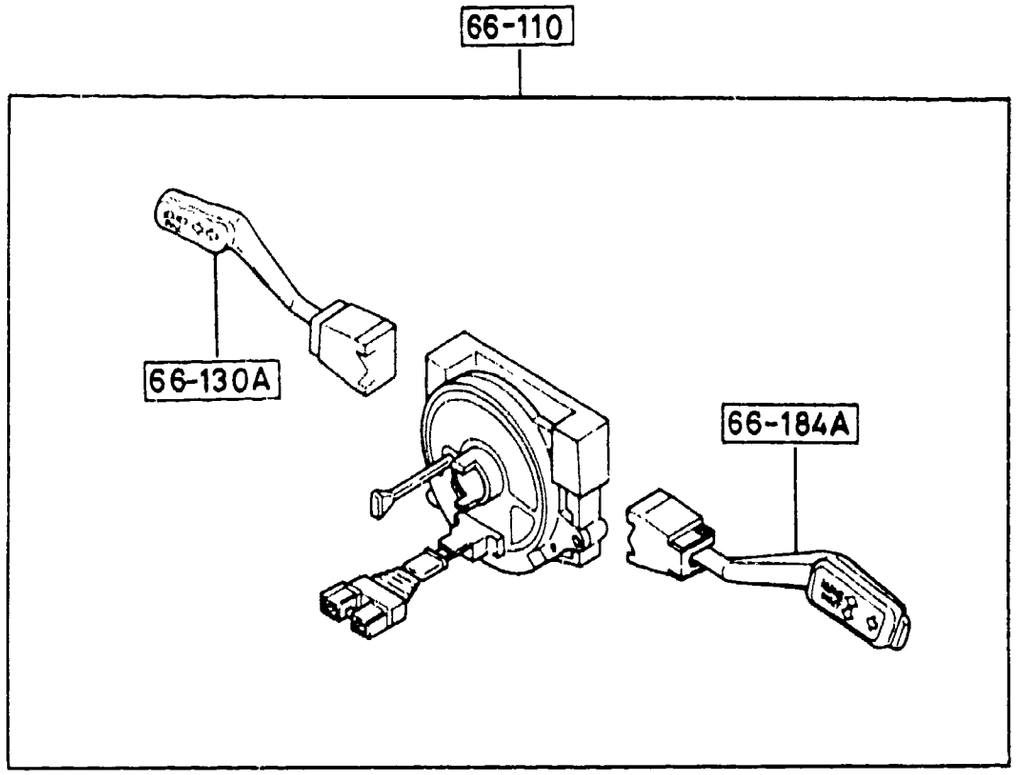

(CPE)

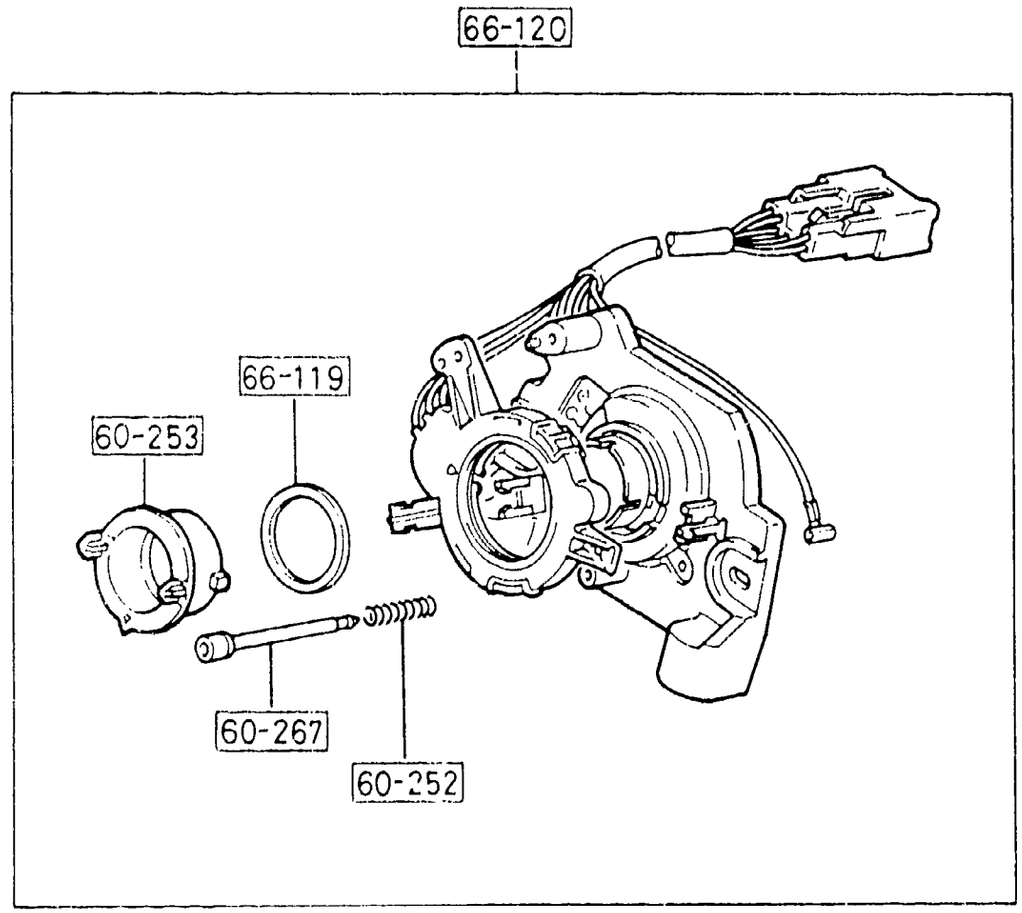

6611 -1 * COMBINATION SWITCH

PART NO.	QTY	MODEL/RESTRICTION	MODEL/RESTRICTION	MODEL/RESTRICTION	FROM-TO
60-252		SPRING			
FB01-66-117	1	(CPE)			
60-253		CAM,CANCEL			
FB01-66-126	1	(CPE)			
60-267		CONTACT,HORN			
FB01-66-127	1	(CPE)			
66-110		SWITCH,COMBINATION			
FC66-66-120A	1	(CONVERTIBLE)			
66-119		WASHER,CONTACT SPRING			
FB01-66-119	1	(CPE)			
66-120		SENSOR,TURN CANCEL			
FB01-66-120	1	(CPE)			
66-130A		SWITCH,TURN-CLUSTER SW.			
FC66-66-130	1	(CONVERTIBLE)			
66-184A		SWITCH,CRUISE-CLUSTER			
FC66-66-34X	1	(CONVERTIBLE)			

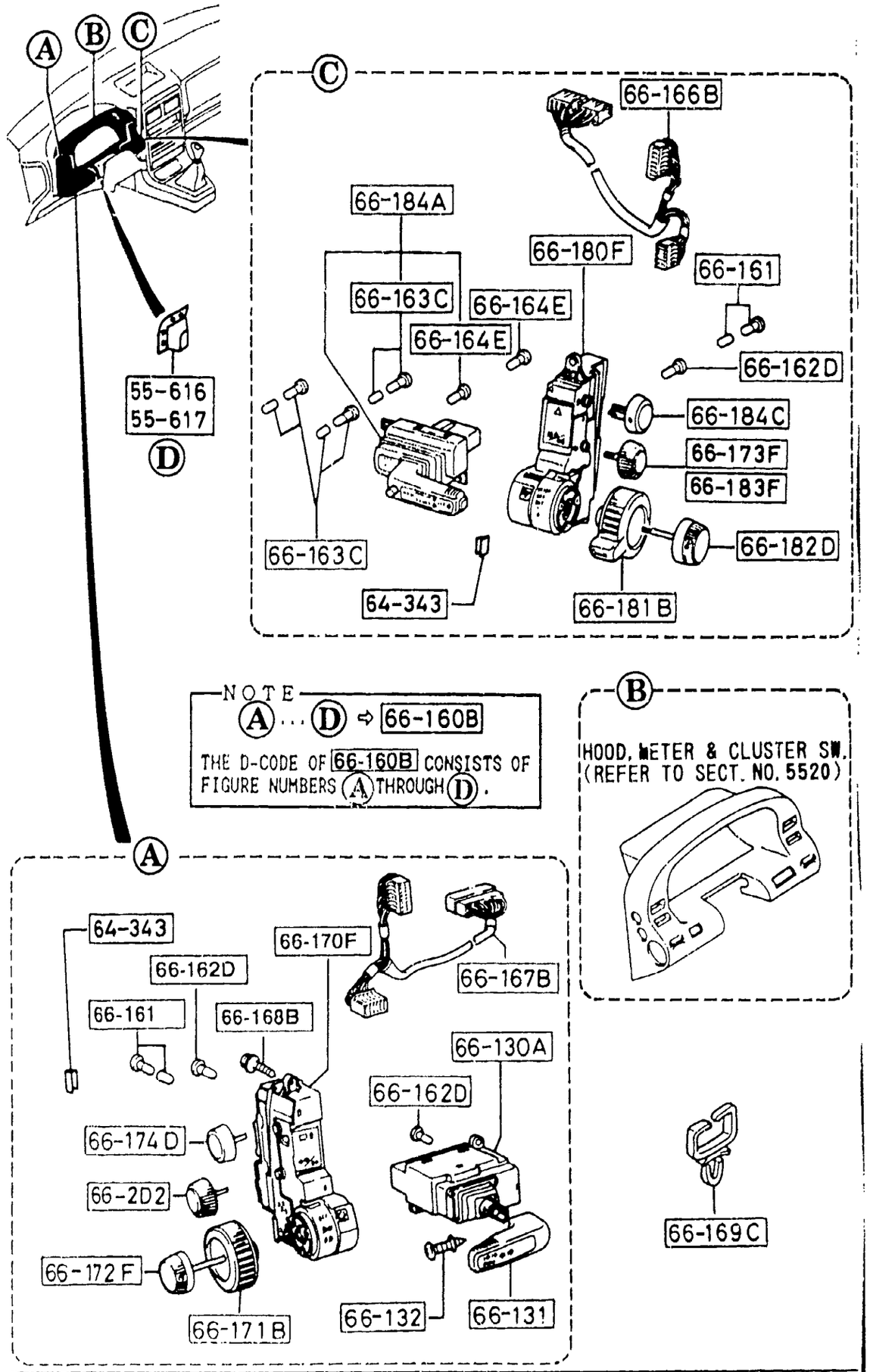

AUFA03

PART NO.	QTY	MODEL/RESTRICTION	MODEL/RESTRICTION	MODEL/RESTRICTION	FROM-TO
55-616		COVER(R),CLUSTER SWITCH			
FC66-55-616	1	(CONVERTIBLE)			
55-617		COVER(L),CLUSTER SWITCH			
FC67-55-617	1	(CONVERTIBLE)			
64-343		SPRING			
FC66-64-343	2	(CONVERTIBLE)			
66-130A		SWITCH,TURN-CLUSTER SW.			
FC01-66-130	1	(CPE)			
66-131		KNOB,TURN-CLUSTER SWITCH			
FC01-66-131	1	(CPE)			
66-132		SCREW & WASHER,TURN KNOB			
FC01-66-132	1	(CPE)			
66-160B		SWITCH,CLUSTER			
FC01-66-160A	1	((CPE))(W/O RR WIPER))			
FC07-66-160A	1	((CPE))(W/RR WIPER))			
FC66-66-160A	1	(CONVERTIBLE)			
66-161		BULB'A',CLUSTER SWITCH			
FB01-66-161	2				
66-162D		BULB'B',CLUSTER SWITCH			
FB01-66-162	2	(CONVERTIBLE)			
FB01-66-162	3	(CPE)			
66-163C		BULB'C',CLUSTER SWITCH			
FC01-66-163	3	((CPE))(W/RR WIPER))			
66-164E		BULB'D',CLUSTER SWITCH			
FB01-66-164	2	((CPE))(W/RR WIPER))			
66-166B		HARNESS,WIPER-CLUSTER SW.			
FC01-66-166	1	(CPE)			

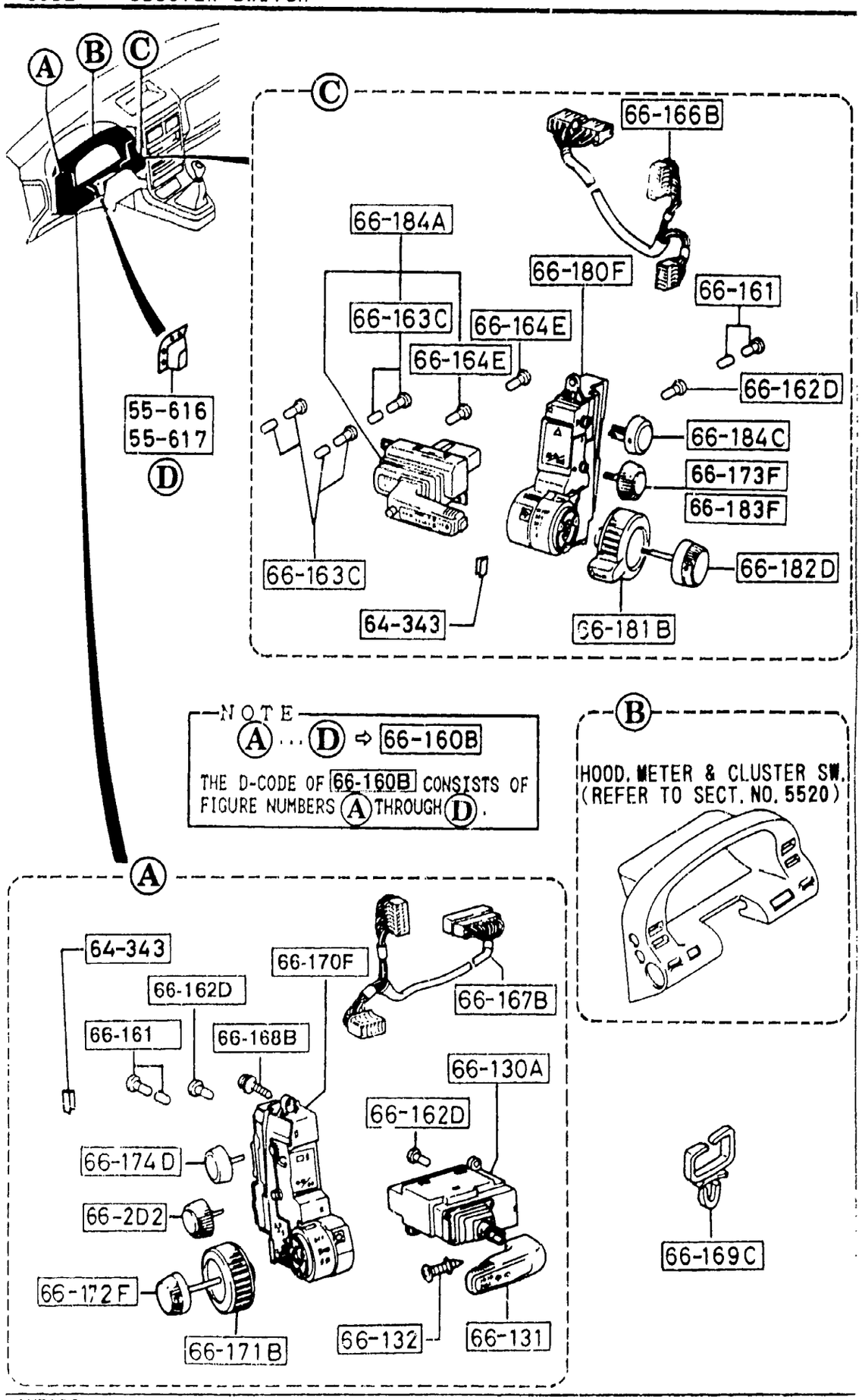

PART NO.	QTY	MODEL/RESTRICTION	MODEL/RESTRICTION	MODEL/RESTRICTION	FROM-TO
CONT'D					
FC66-66-166	1	(CONVERTIBLE)			
66-167B		HARNESS,LIGHT-CLUSTER SW.			
FC01-66-167	1	(CPE)			
FC66-66-167A	1	(CONVERTIBLE)			
66-168B		SCREW,CLUSTER SWITCH			
FC01-66-168	1	(CPE)			
FC01-66-168	6	(CONVERTIBLE)			
66-169C		CLIP,CORD-CLUSTER SWITCH			
FB01-66-169	1	(CPE)			
66-170F		SWITCH,LIGHT-CLUSTER SW.			
FC01-66-170	1				
66-171B		KNOB,LIGHT-CLUSTER SWITCH			
FC01-66-171	1				
66-172F		KNOB,PANEL LIGHT-CLUSTER			
FC01-66-172	1				
66-173F		KNOB,SMALL--CLUSTER SW.			
FC01-66-173	1	((CPE))(W/RR WIPER)) (CONVERTIBLE)			
66-174D		KNOB,REAR DEFFOG-CLUSTER			
FB01-66-174	1				
66-180F		SWITCH,WIPER-CLUSTER SW.			
FC01-66-180	1	((CPE))(W/O RR WIPER))			
FC07-66-180	1	((CPE))(W/RR WIPER))			
FC66-66-180	1	(CONVERTIBLE)			
66-181B		KNOB,WIPER-CLUSTER SWITCH			
FC01-66-181	1				
66-182D		KNOB,WASHER-CLUSTER SW.			
FC01-66-182	1				

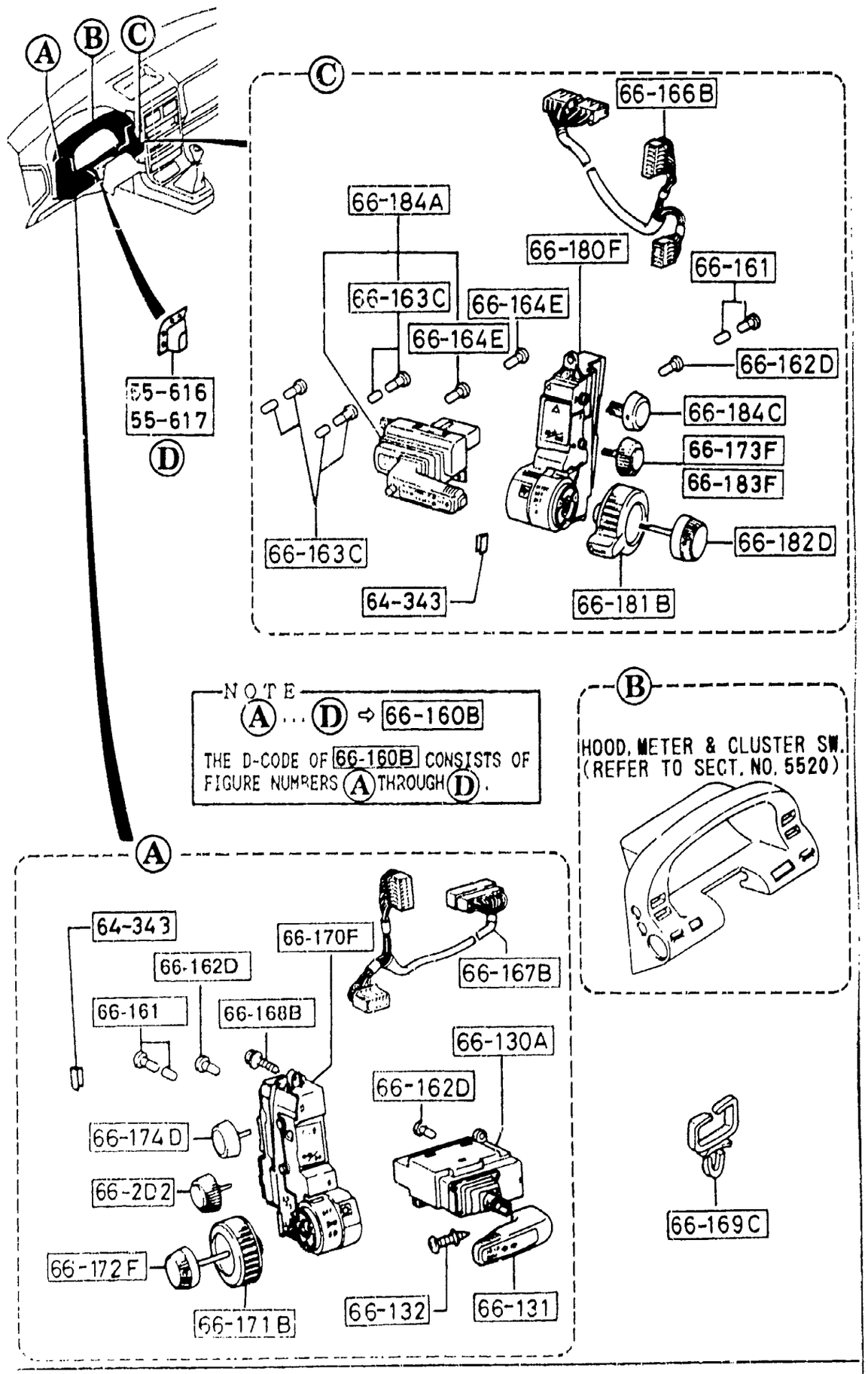

PART NO.	QTY	MODEL/RESTRICTION	MODEL/RESTRICTION	MODEL/RESTRICTION	FROM-TO
66-183F FC01-66-183	1	KNOB,DUMMY-CLUSTER SWITCH ((CPE))(W/O RR WIPER))			
66-184A FC01-66-34X	1	SWITCH,CRUISE-CLUSTER ((CPE))(W/RR WIPER))			
66-184C FB01-66-184	1	KNOB,HAZARD-CLUSTER SW.			
66-2D2 FC02-66-173	1	KNOB,SWITCH-RR WIPER			

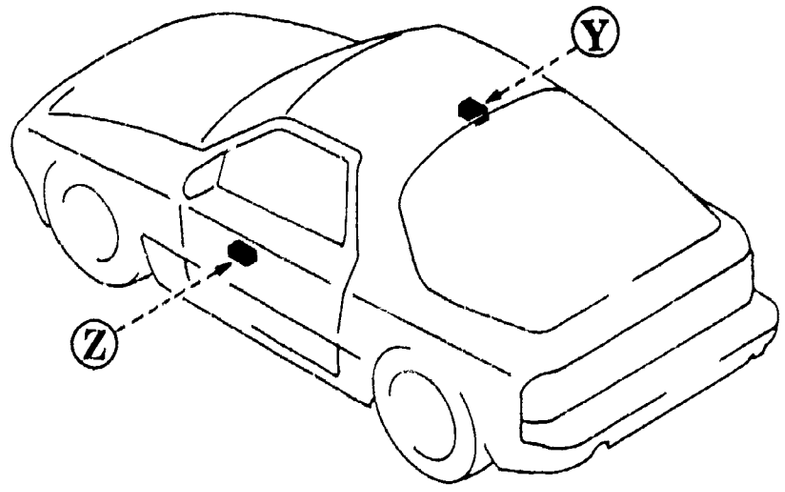

Z

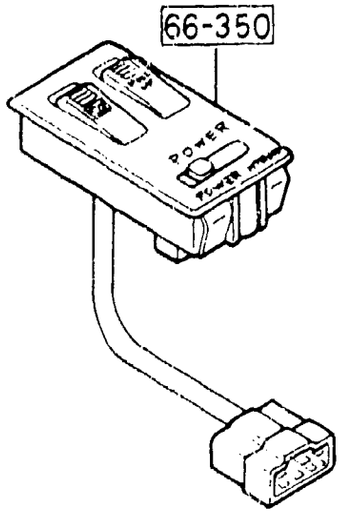

Y

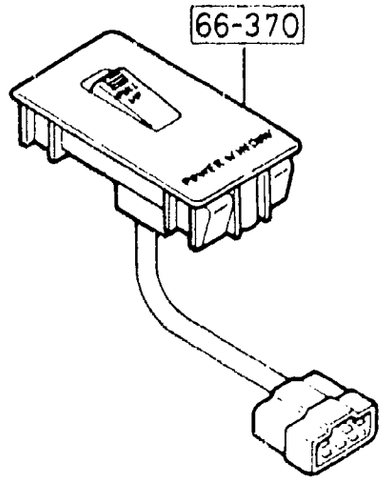

6615 -1 * POWER WINDOW SWITCHES

PART NO.	QTY	MODEL/RESTRICTION	MODEL/RESTRICTION	MODEL/RESTRICTION	FROM-TO
66-350		SWITCH,POWER WINDOW			
FC01-66-350B	1				
66-370		SWITCH,POWER WINDOW			
FC01-66-370B	1				

6630 -1 RELAYS & UNIT (BODY)

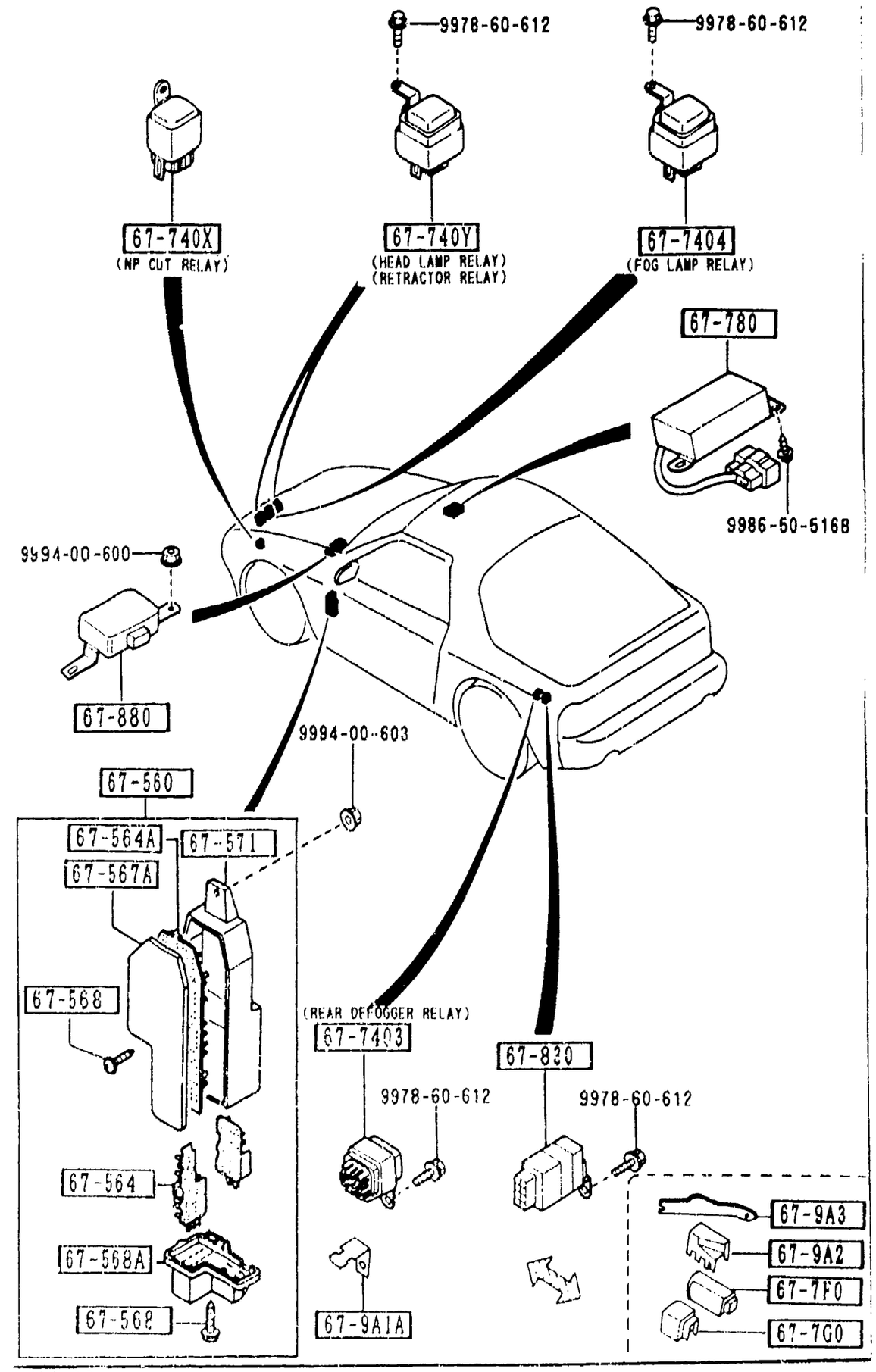

PART NO.	QTY	MODEL/RESTRICTION	MODEL/RESTRICTION	MODEL/RESTRICTION	FROM-TO
67-560		UNIT,CENTRAL CONTROL			
FC01-67-560	1	(CPE)			
FC66-67-560A	1	(CONVERTIBLE)			
67-564		PLATE,FLASHER-C. P. UNIT			
FB01-67-564	1				
67-564A		BOARD,PRINT-BURGLAR ALARM			
FC01-67-564	1	(CPE)			
FC66-67-564	1	(CONVERTIBLE)			
67-567A		COVER,MAIN-C. P. UNIT			
FC01-67-567	1				
67-568		SCREW,TAPPING			
FB01-67-569	2				
67-568A		COVER,SUB-C. P. UNIT			
FC01-67-568	1				
67-571		CASE,CONTROL UNIT			
FC01-67-566	1				
67-7F0		UNIT,DIAGNOSIS-AIR BAG			
NA01-67-7F0A	1	(CONVERTIBLE)			
67-7G0		UNIT,BACK UP POWER-A.BAG			
NA01-67-7G0A	1	(CONVERTIBLE)			
67-740X		RELAY & COVER,NORMAL CLOSE			
B311-67-740	1	(FOR NP CUT RELAY)			
67-740Y		RELAY & COVER,NORMAL OPEN			
H430-67-740	2	(HEAD LAMP RELAY) (RETRACTOR RELAY)			
67-7403		RELAY,N.O.			
H440-67-740	1	(REAR DEFOGGER RELAY)			
67-7404		RELAY,TRANSFER			

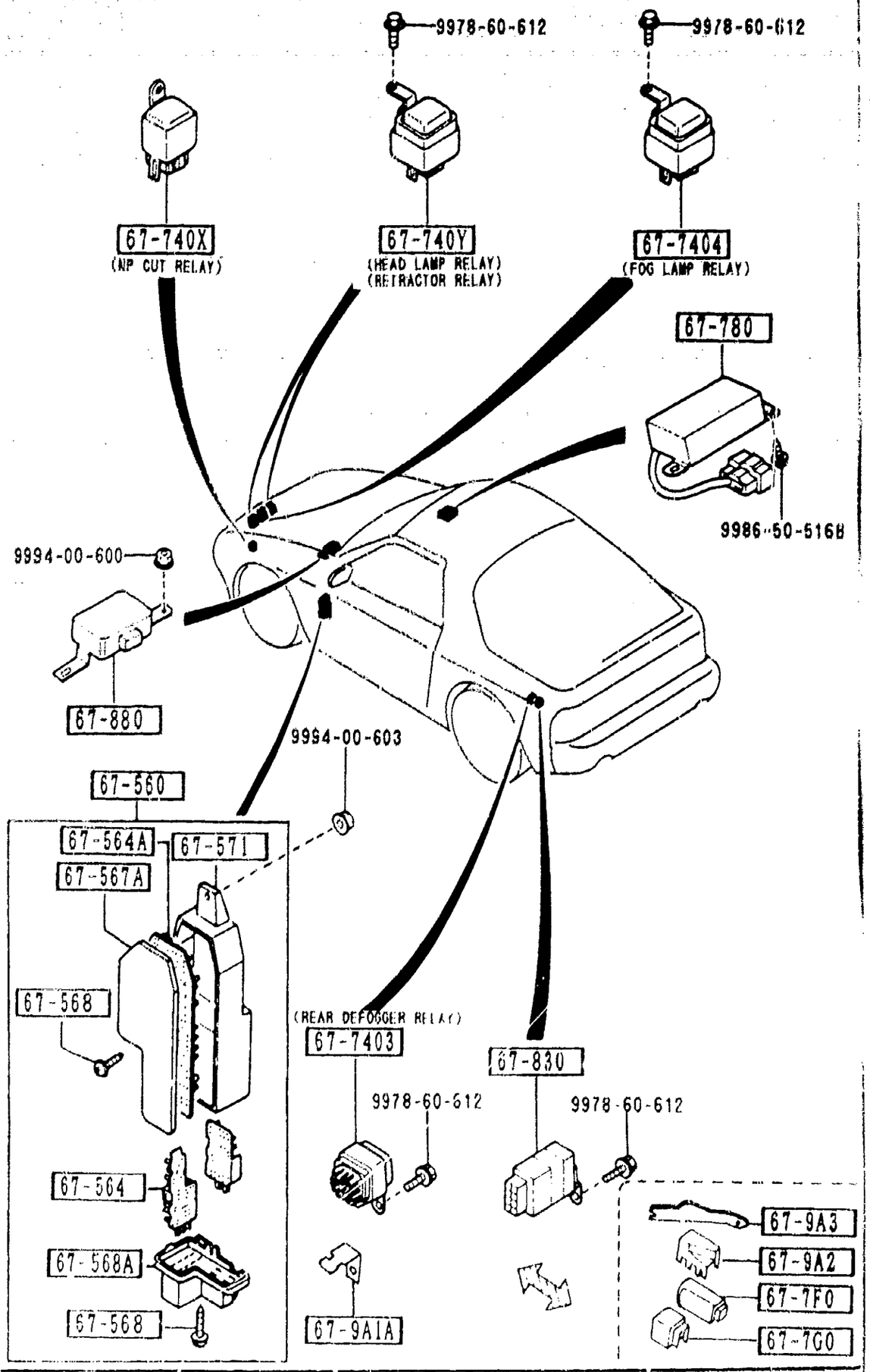

AUFA03

6630 -2 * RELAYS & UNIT (BODY)

PART NO.	QTY	MODEL/RESTRICTION	MODEL/RESTRICTION	MODEL/RESTRICTION	FROM-TO
CONT'D H432-67-740	1	(FOG LAMP RELAY)			
67-780		BOX,CON-AUTO SHOULD. BELTS			
FC01-67-780A	1	(CPE)			
67-830		UNIT,DOOR LOCK & TIMER			
FC33-67-830	1				
67-880		BOX,CONTROL-E.C.P.S. SYS.			
FC01-67-880A	1	TURBO, (W/P.S.-VELOCITY SENSOR) (CPE)			
67-9A1A		BRACKET,RELAY			
FC33-67-9A1	1				
67-9A2		COVER,RELAY			
FC66-67-9A2	1	(CONVERTIBLE)			
67-9A3		LABEL,CAUTION-RELAY			
FC66-67-9A3	1	(CONVERTIBLE)			

CAT. AUFAJ3-07

1993-12

6635 DOOR SWITCH & HORNS

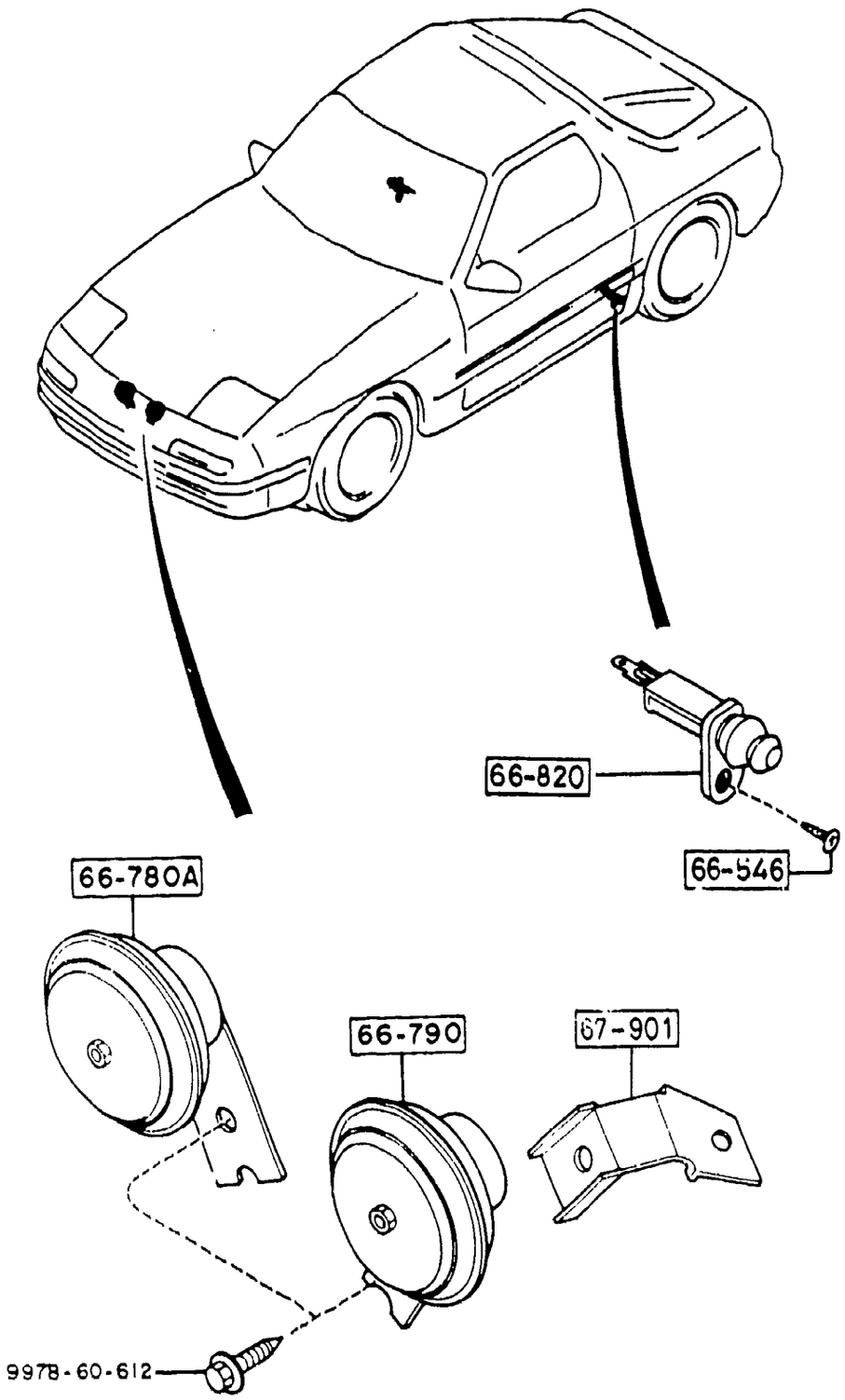

PART NO.	QTY	MODEL/RESTRICTION	MODEL/RESTRICTION	MODEL/RESTRICTION	FROM-TO
66-546		SCREW,DOOR SWITCH			
LA01-66-546	2				
66-780A		HORN,HIGH TONE			
FB03-66-780	1				
66-790		HORN,LOW TONE			
FB01-66-790	1				
66-820		SWITCH,DOOR			
FB02-66-540	2				
67-901		BRACKET,HORN			
FB05-66-792	1				

(W/O TURBO)

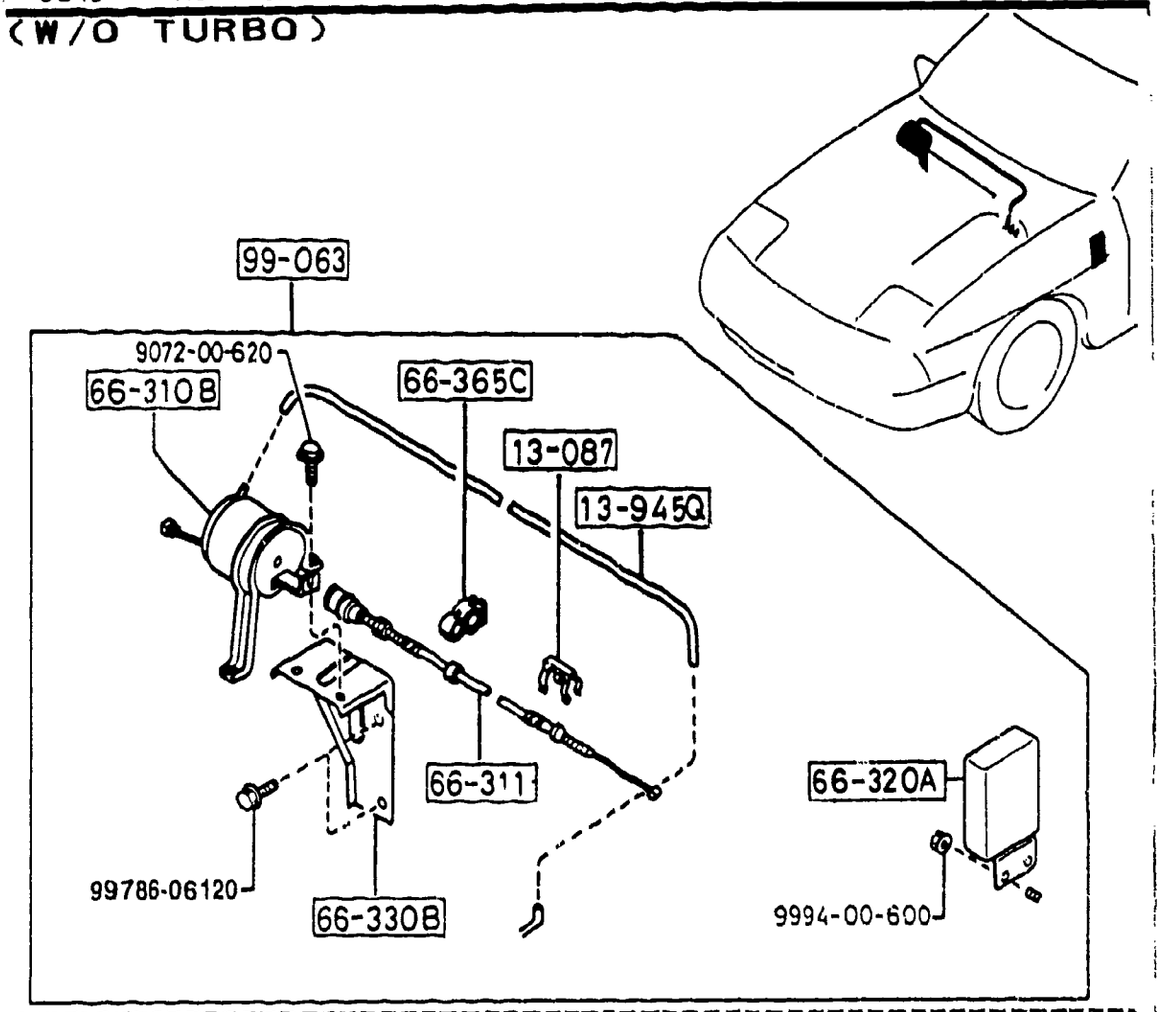

(TURBO)

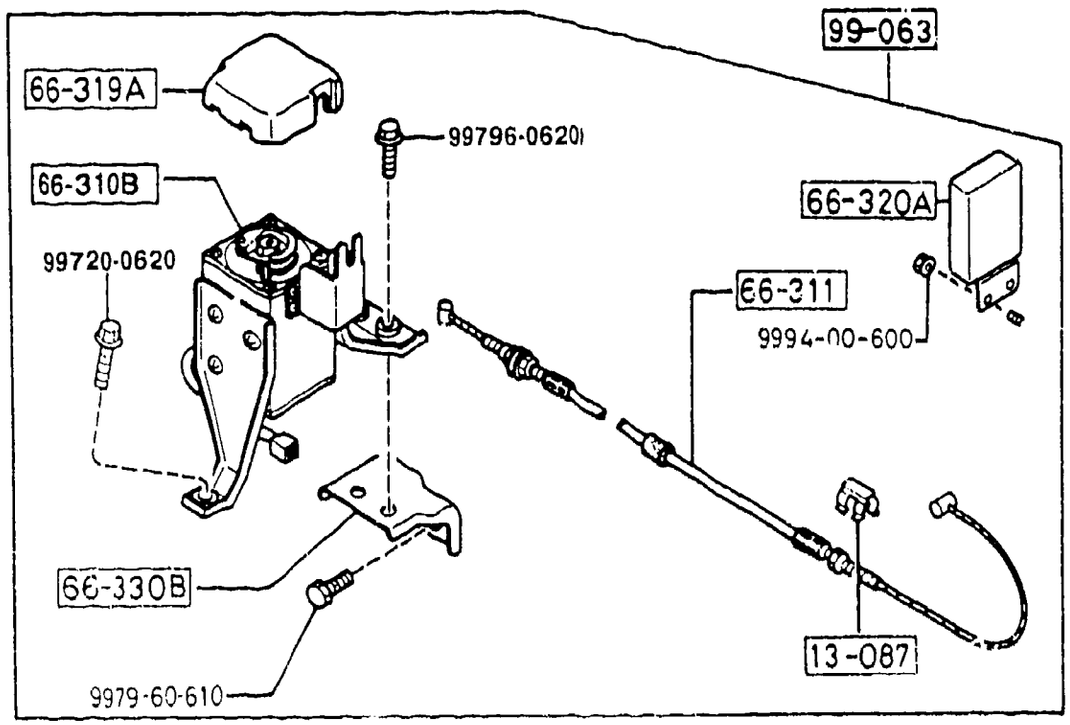

PART NO.	QTY	MODEL/RESTRICTION	MODEL/RESTRICTION	MODEL/RESTRICTION	FROM-TO
13-087		SPRING			
8871-13-087A	1				
13-945Q		PIPE			
FC01-66-361	1	(W/O TURBO)			
66-310B		ACTUATOR,A.C.C.			
FB01-66-310A	1	(W/O TURBO)			
F046-66-310B	1	(TURBO)			
66-311		WIRE,A.C.C.			
FB44-66-311A	1	(TURBO)			
FC01-66-311	1	(W/O TURBO)			
66-319A		COVER,ACTUATOR			
B107-66-319	1	(TURBO)			
66-320A		UNIT,A.C.CONTROL			
FC01-66-320A	1	(W/O TURBO)			
FC17-66-320A	1	(TURBO)			
66-330B		BRACKET,A.C.C.BOX			
FB01-66-330	1				
66-365C		CLIP			
UB40-66-365	2	(W/O TURBO)			
99-063		A.C.C.SET			
8AF3-66-340	1	(W/O TURBO)			
8AF4-66-340	1	(TURBO)			

(THIS ILLUSTRATION CONSISTS OF 3 PAGES)

(W/O EQUALIZER, W/O C. DISC)

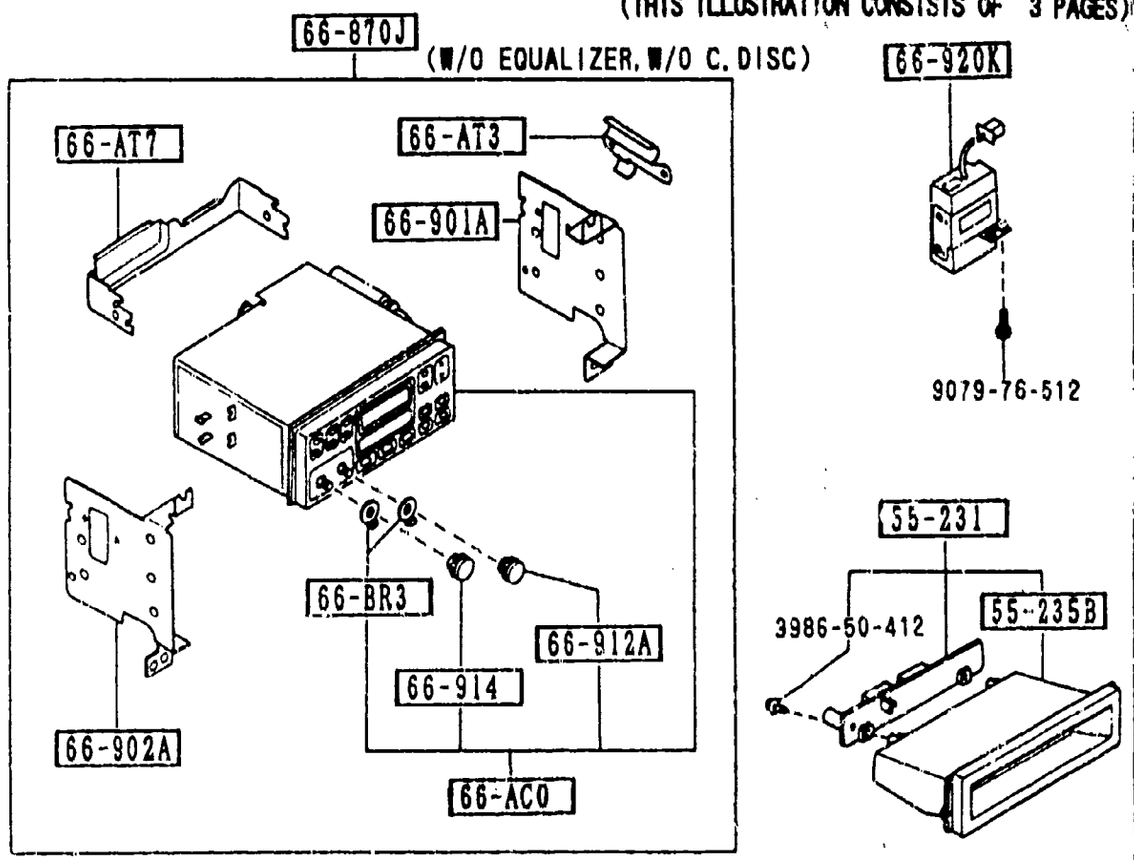

(W/EQUALIZER, W/O C. DISC)

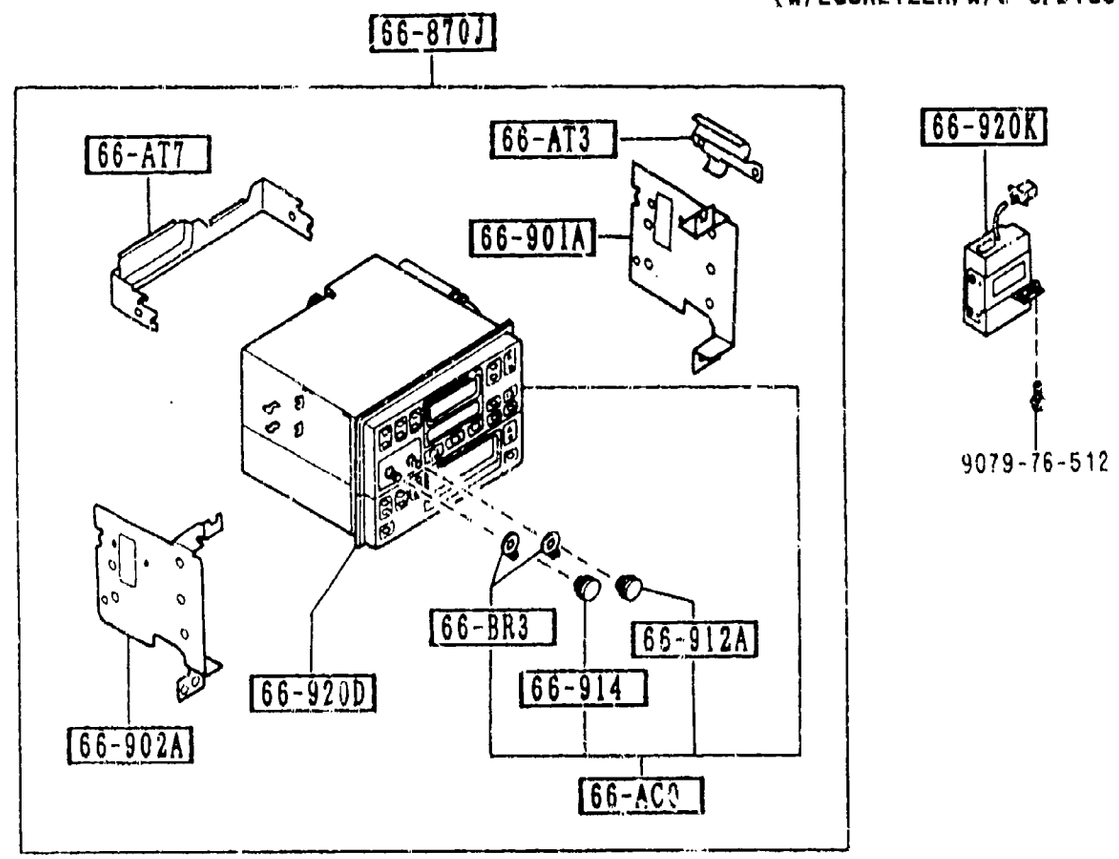

(THIS ILLUSTRATION CONSISTS OF 3 PAGES)

(W/AE SYSTEM EQUALIZER, W/C. DISC)

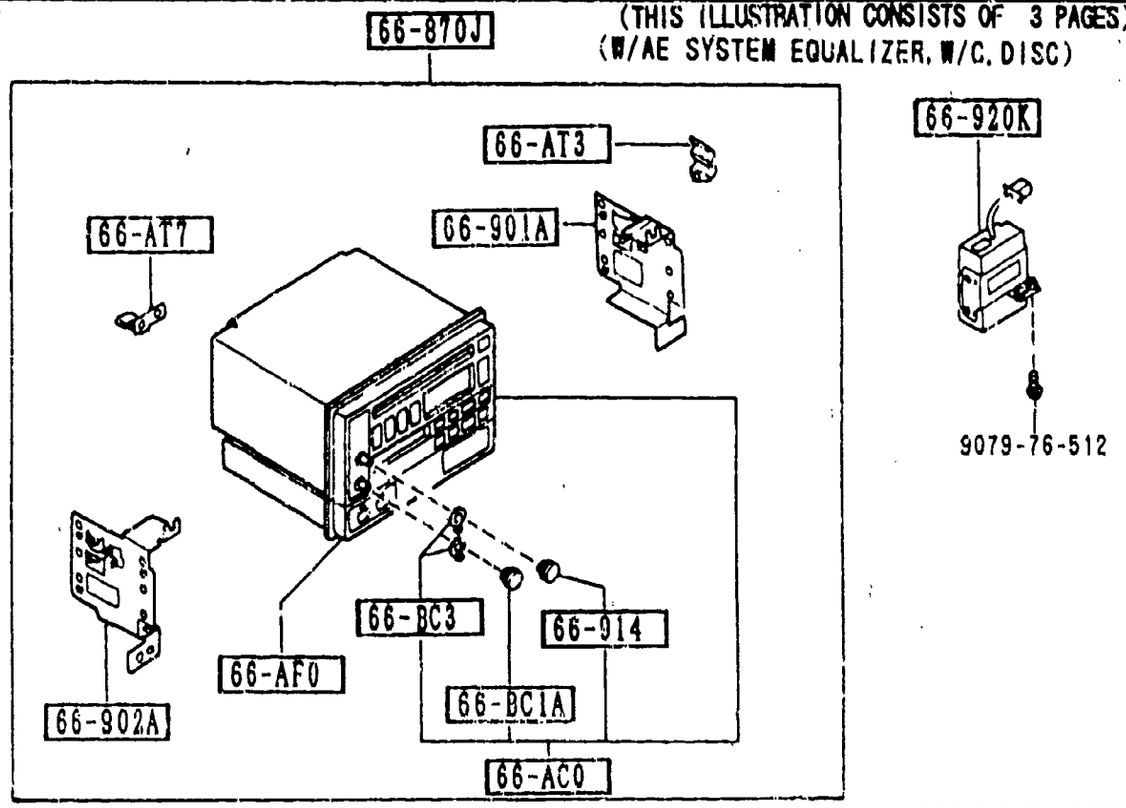

(CONVERTIBLE)

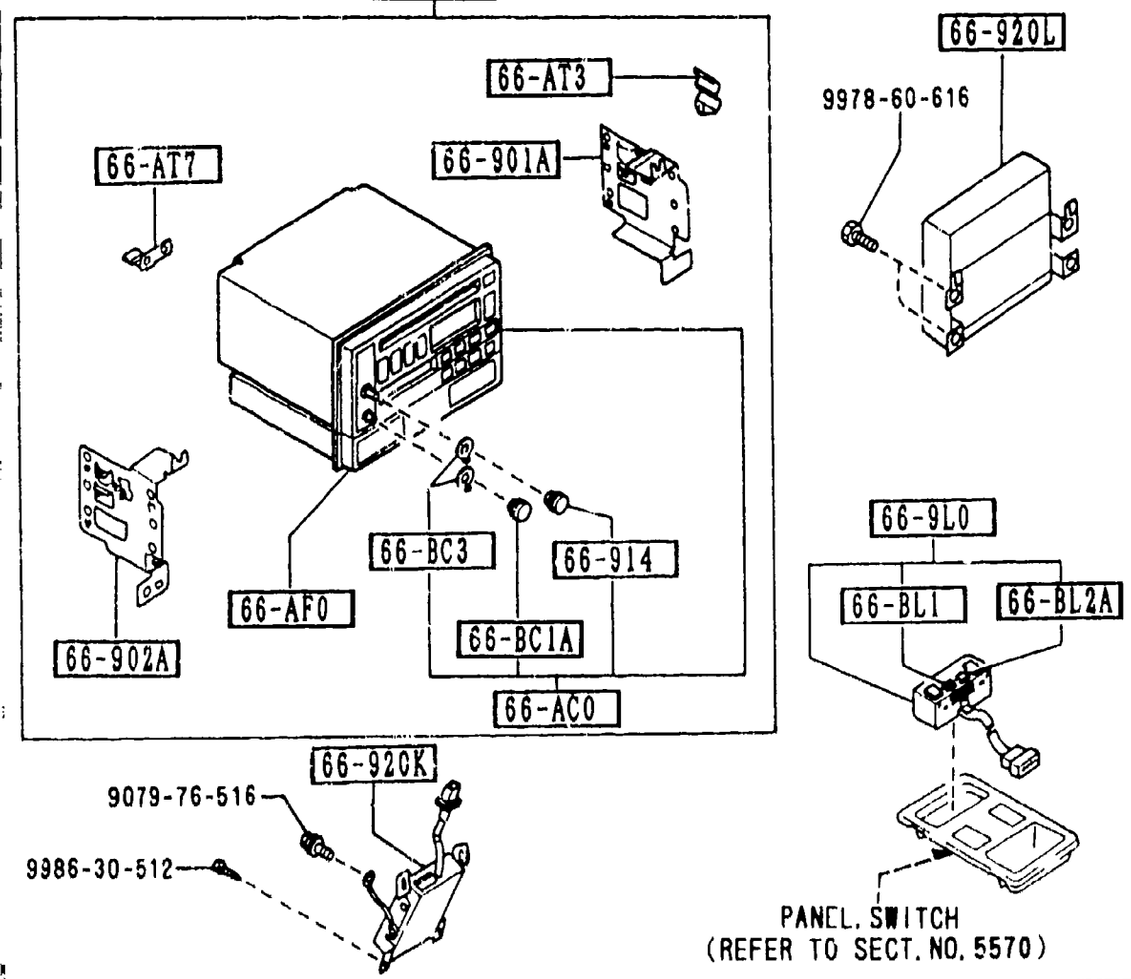

(THIS ILLUSTRATION CONSISTS OF 3 PAGES)

(W/O EQUALI... C.DISC)

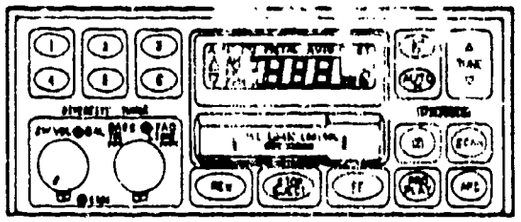

(W/EQUALIZER,W/O C.DISC)

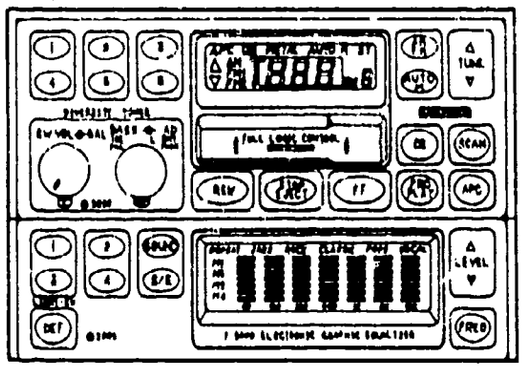

(W/AE SYSTEM EQUALIZER,W/C.DISC)

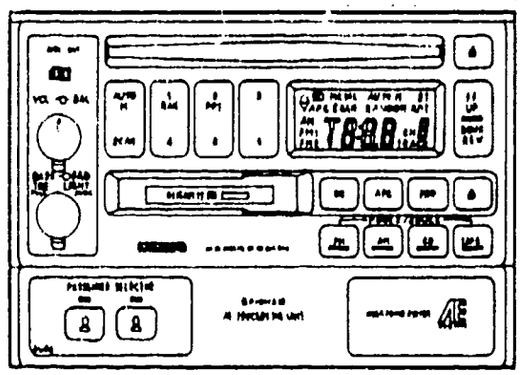

(CONVERTIBLE)

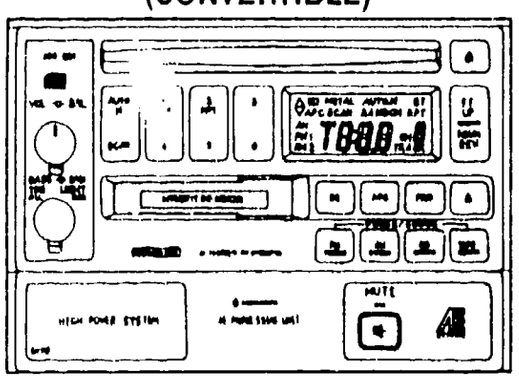

AUFA03

(THIS ILLUSTRATION CONSISTS OF 3 PAGES)

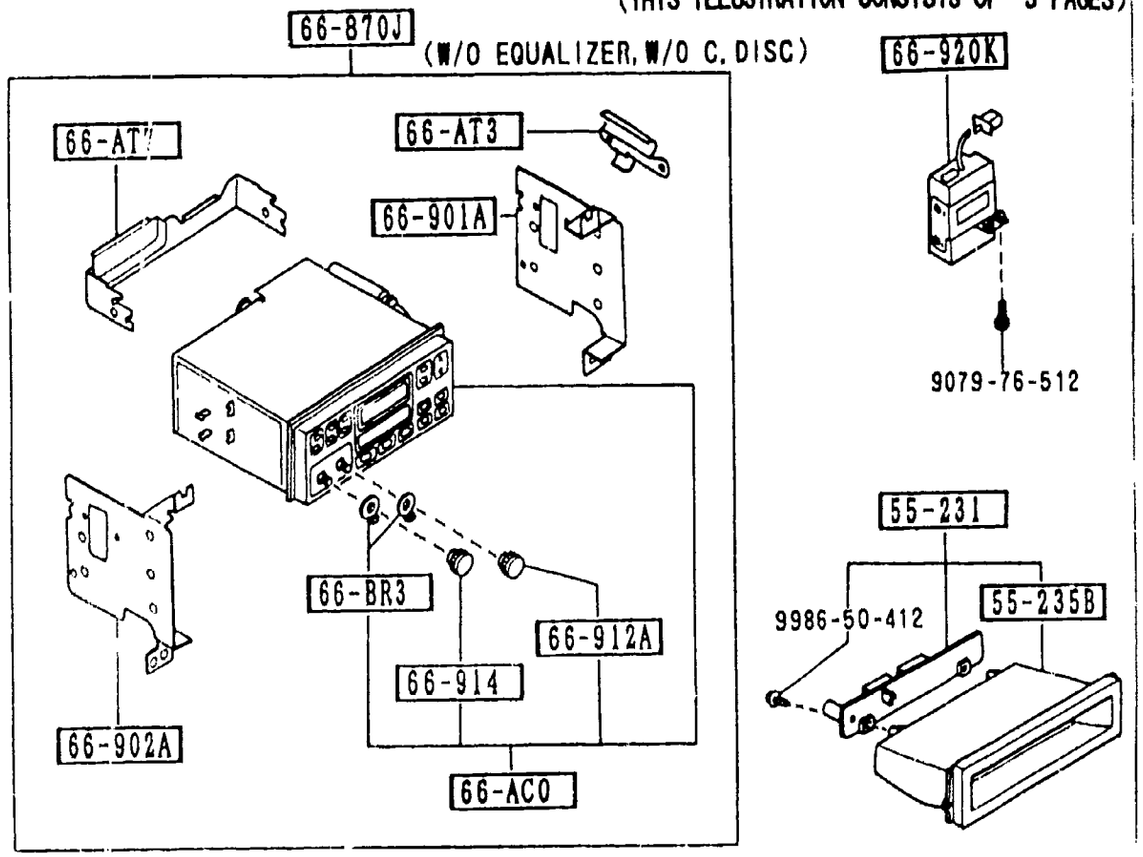

(W/EQUALIZER,W/O C.DISC)

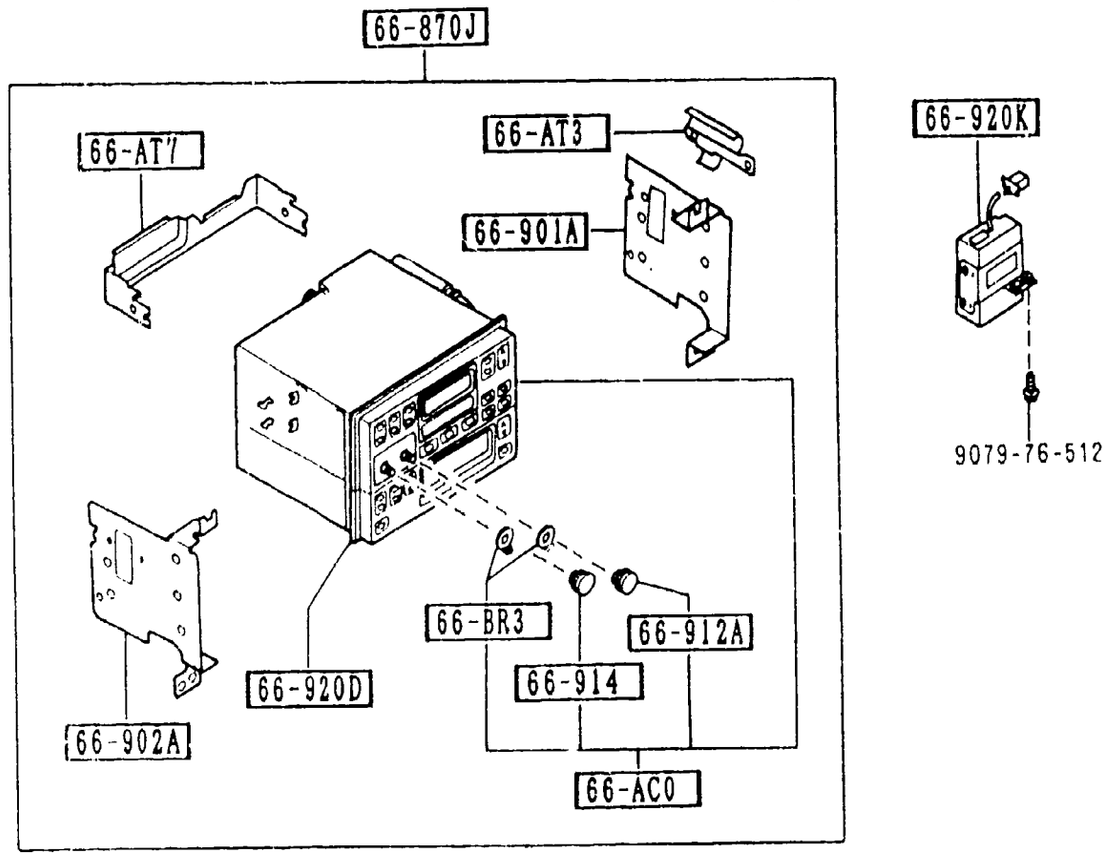

PART NO.	QTY	MODEL/RESTRICTION	MODEL/RESTRICTION	MODEL/RESTRICTION	FROM-TO
55-231		ORNAMENT,STEREO			
FC03-55-23Y	1	BASE, (W/O EQUALIZER,W/O C.DISC) (CPE)			
55-235B		ORNAMENT,STEREO-UPPER			
FC03-55-235	1	BASE, (W/O EQUALIZER,W/O C.DISC) (CPE)			
66-AC0		TUNER & DECK,COMB.			
FC03-66-AC0A	1	BASE, TURBO, (W/O C.DISC) (CPE)			
FC04-66-AC0	1	BASE-OPT-2, TURBO-OPT, (W/C.DISC) (CPE)			
FC04-66-AC0	1	(CONVERTIBLE)			
66-AF0		CONTROLLER,AE SYSTEM-DISC			
FC04-66-AF0	1	BASE-OPT-2, TURBO-OPT, (W/C.DISC) (CPE)			
FC66-66-AF0	1	(CONVERTIBLE)			
66-AT3		BRACKET(R),ANTENNA			
FB03-66-AT3	1	BASE, TURBO, (W/O C.DISC) (CPE)			
FC32-66-AT3	1	BASE-OPT-2, TURBO-OPT, (W/C.DISC) (CPE)			
FC32-66-AT3	1	(CONVERTIBLE)			
66-AT7		BRACKET(RR),AUDIO			
FC01-66-AT7	1	BASE, TURBO, (W/O C.DISC) (CPE)			
FC04-66-AT7	1	BASE-OPT-2, TURBO-OPT, (W/C.DISC) (CPE)			
FC04-66-AT7	1	(CONVERTIBLE)			

6680 AUDIO SYSTEMS (RADIO & TAPE DECK) (2/3)

(THIS ILLUSTRATION CONSISTS OF 3 PAGES)
(W/AE SYSTEM EQUALIZER, W/C.DISC)

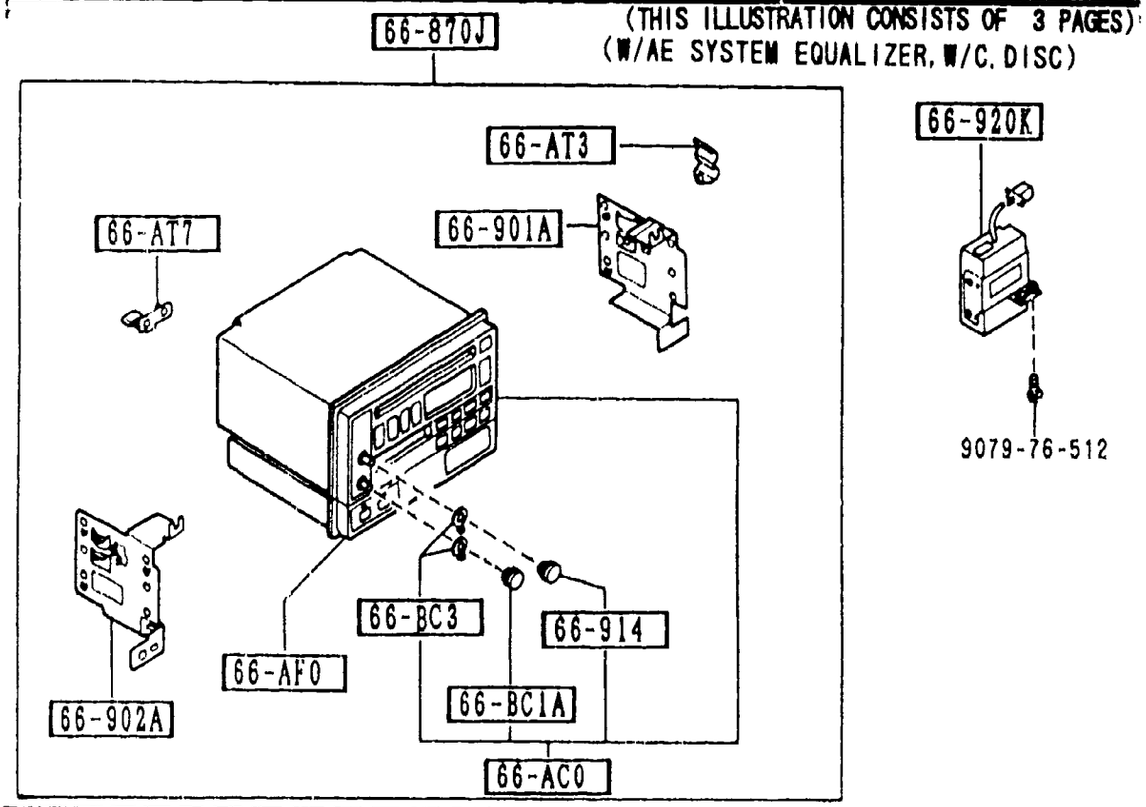

(CONVERTIBLE)

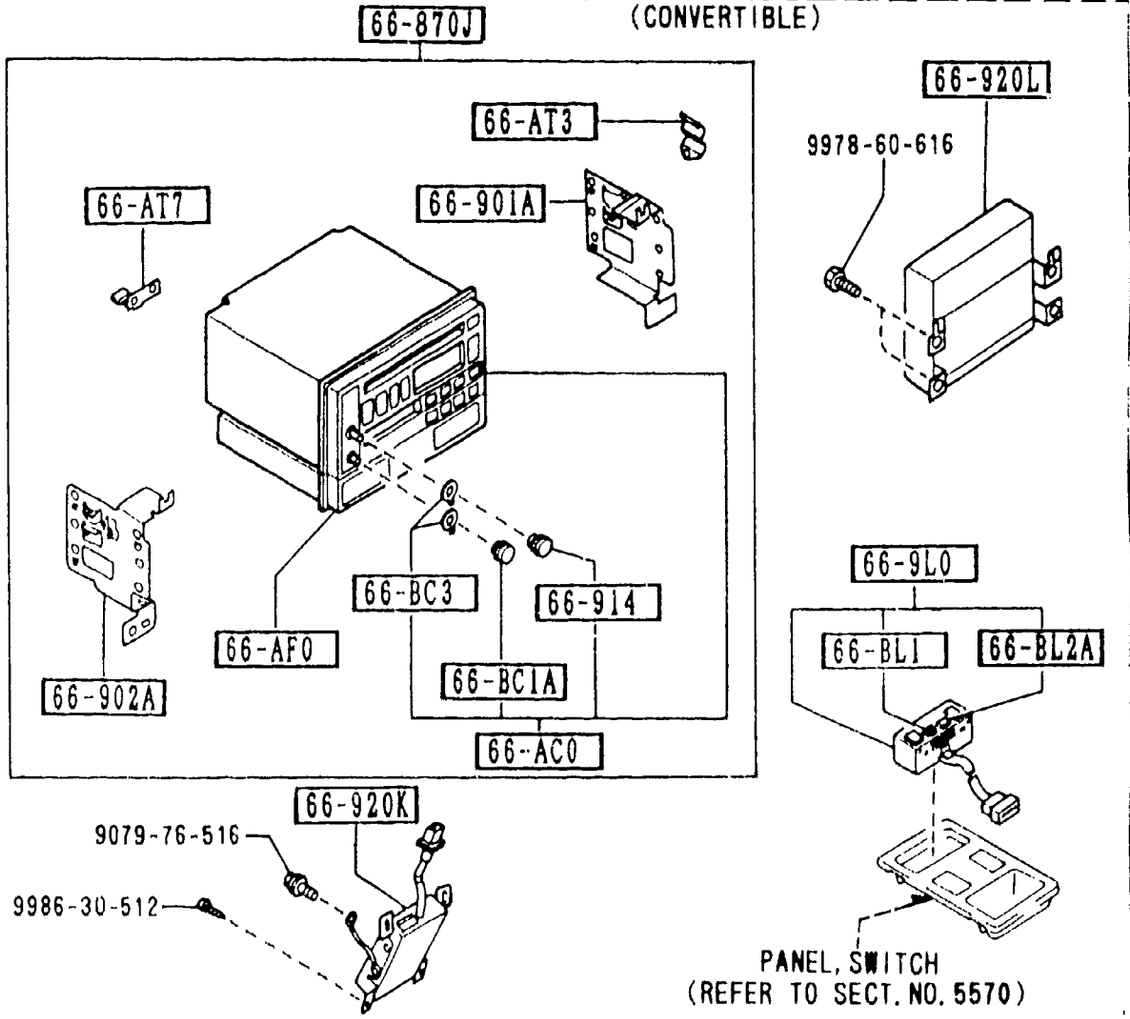

PART NO.	QTY	MODEL/RESTRICTION	MODEL/RESTRICTION	MODEL/RESTRICTION	FROM-TO
66-BC1A		KNOB,TONE-TUNER & DECK			
LA05-66-BC3	1	BASE-OPT-2, TURBO-OPT, (W/C.DISC) (CPE)			
LA05-66-BC3	1	(CONVERTIBLE)			
66-BC3		KNOB,BALANCE-TUNER & DECK			
LA05-66-BC2	2	BASE-OPT-2, TURBO-OPT, (W/C.DISC) (CPE)			
LA05-66-BC2	2	(CONVERTIBLE)			
66-BL1		KNOB,VOL.-REMOTE CONTROL			
F055-66-BL1	1	(CONVERTIBLE)			
66-BL2A		KNOB,SURROUND-REMOTE CONT			
F055-66-BL2	1	(CONVERTIBLE)			
66-BR3		KNOB,BALANCE-TUNER			
FC01-66-BR3	2	BASE, TURBO, (W/O C.DISC) (CPE)			
66-870J		AUDIO SET			
FC02-66-9C0A	1	BASE, (W/O EQUALIZER,W/O C.DISC) (CPE)			
FC03-66-9W0A	1	TURBO, (W/EQUALIZER,W/O C.DISC) (CPE)			
FC04-66-9W0	1	OPT-2, (W/AE SYSTEM EQUALIZER,W/C.DISC) (CPE)			
FC66-66-9W0	1	(CONVERTIBLE)			
66-9L0		CONTROL,REMOTE-AUDIO			
F055-66-9L0A	1	(CONVERTIBLE)			
66-901A		BRACKET(R),TUNER			
FC01-66-AT1	1	BASE, TURBO, (W/O C.DISC) (CPE)			

(THIS ILLUSTRATION CONSISTS OF 3 PAGES)

(W/O EQUALIZER, W/O C.DISC)

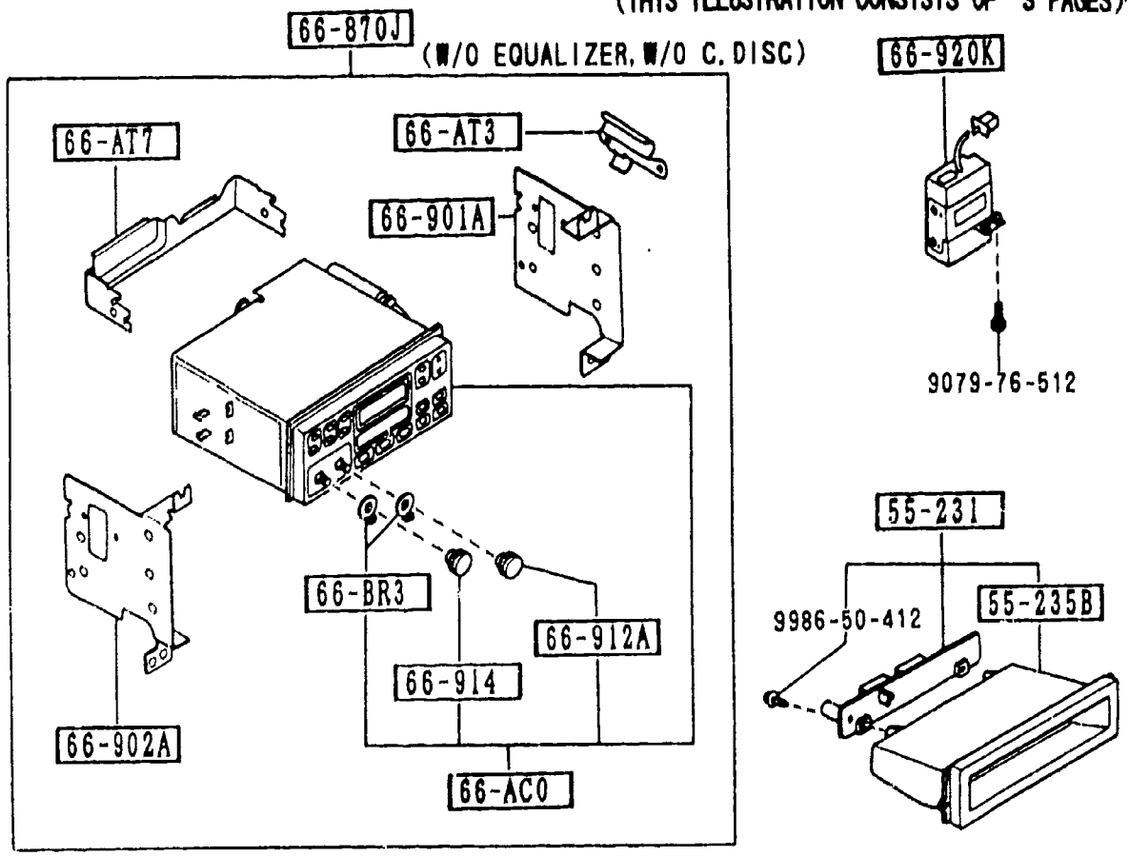

(W/EQUALIZER, W/O C.DISC)

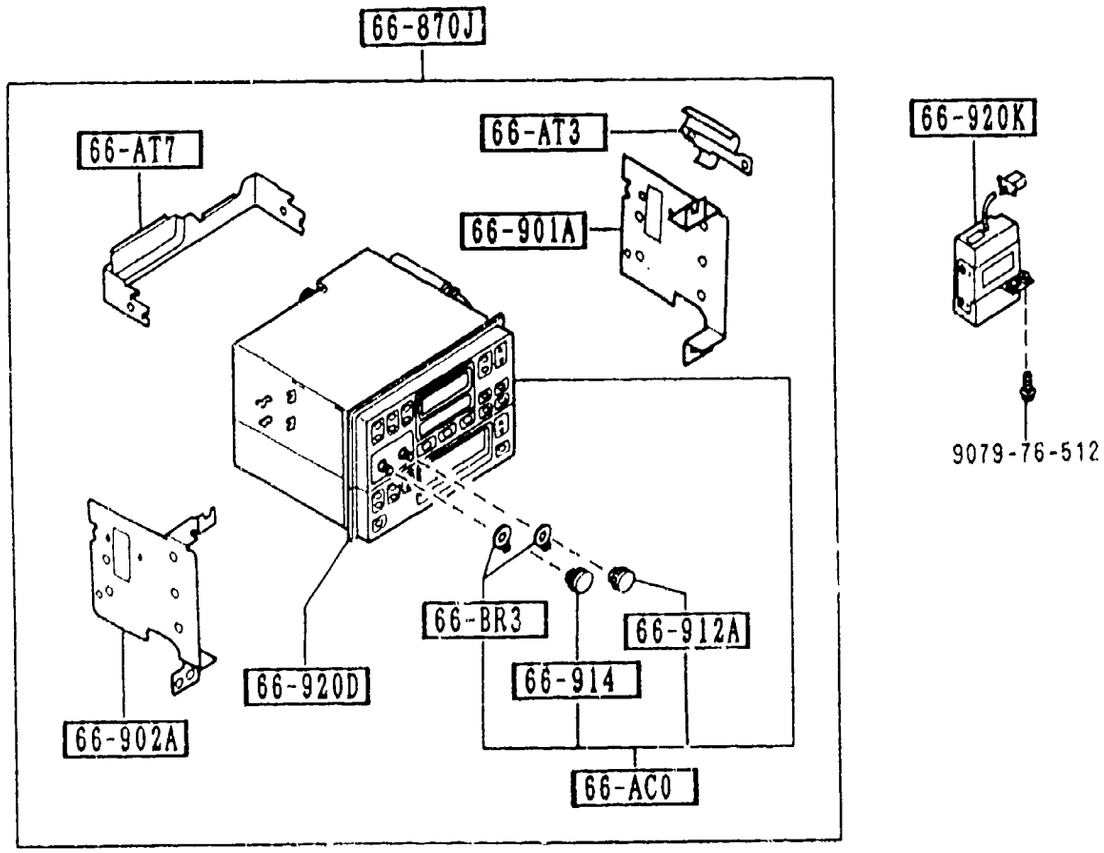

PART NO.	QTY	MODEL/RESTRICTION	MODEL/RESTRICTION	MODEL/RESTRICTION	FROM-TO
CONT'D FC32-66-AT1	1	BASE-OPT-2, TURBO-OPT, (W/C.DISC) (CPE)			
FC32-66-AT1	1	(CONVERTIBLE)			
+----------+ | 66-902A | +----------+		BRACKET(L),TUNER			
FC01-66-AT2	1	BASE, TURBO, (W/O C.DISC) (CPE)			
FC32-66-AT2	1	BASE-OPT-2, TURBO-OPT, (W/C.DISC) (CPE)			
FC32-66-AT2	1	(CONVERTIBLE)			
+----------+ | 66-912A | +----------+		KNOB,TONE-TUNER			
FC01-66-BR2	1	BASE, TURBO, (W/O C.DISC) (CPE)			
+----------+ | 66-914 | +----------+		KNOB,VOLUME-TUNER			
FC04-66-BC1	1	BASE-OPT-2, TURBO-OPT, (W/C.DISC) (CPE)			
FC04-66-BC1	1	(CONVERTIBLE)			
FC01-66-BR1	1	BASE, TURBO, (W/O C.DISC) (CPE)			
+----------+ | 66-920D | +----------+		EQUALIZER,GRAPHIC			
FC03-66-AE0	1	BASE, TURBO, (W/O C.DISC) (CPE)			
+----------+ | 66-920K | +----------+		AMP,WOOFER-AUDIO			
FC02-66-920A	1	BASE, TURBO, (W/O C.DISC) (CPE)			
FC04-66-920	1	BASE-OPT-2, TURBO-OPT, (W/C.DISC) (CPE)			
FC66-66-920	1	(CONVERTIBLE)			
+----------+ | 66-920L | +----------+		AMP,PILLOW-AUDIO			
FC32-66-920	1	(CONVERTIBLE)			

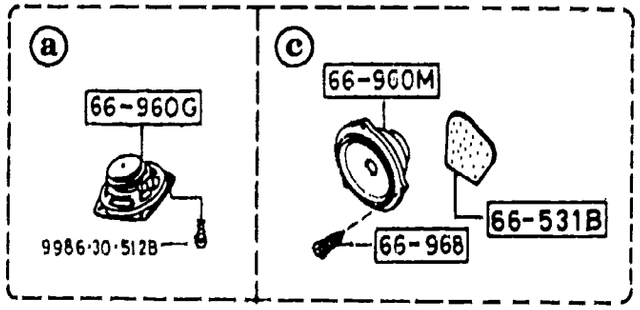
a
66-960G
9986-30-512B
c
66-960M
66-531B
66-968

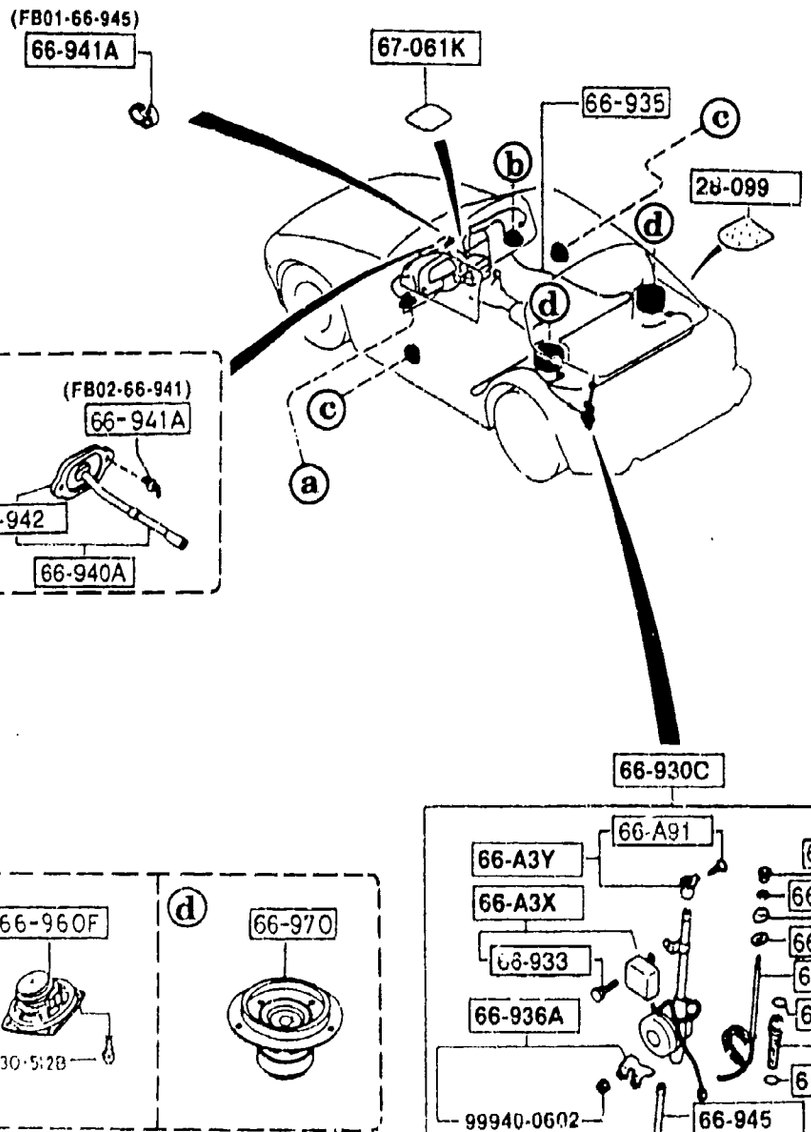
(FB01-66-945)
66-941A
67-061K
66-935
28-099
(FB02-66-941)
66-941A
66-942
66-940A
66-930C
66-A91
66-A3Y
66-A3X
66-933
66-936A
99940-0602
66-945
66-A9Z
66-A30
66-A32
66-A35
66-941
66-A94A
66-A96A
b
66-960F
9986-30-512B
d
66-970

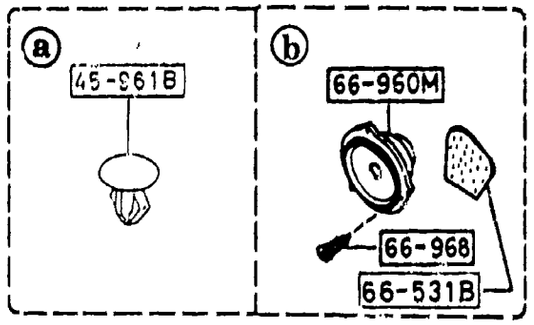
a
45-961B
b
66-960M
66-968
66-531B

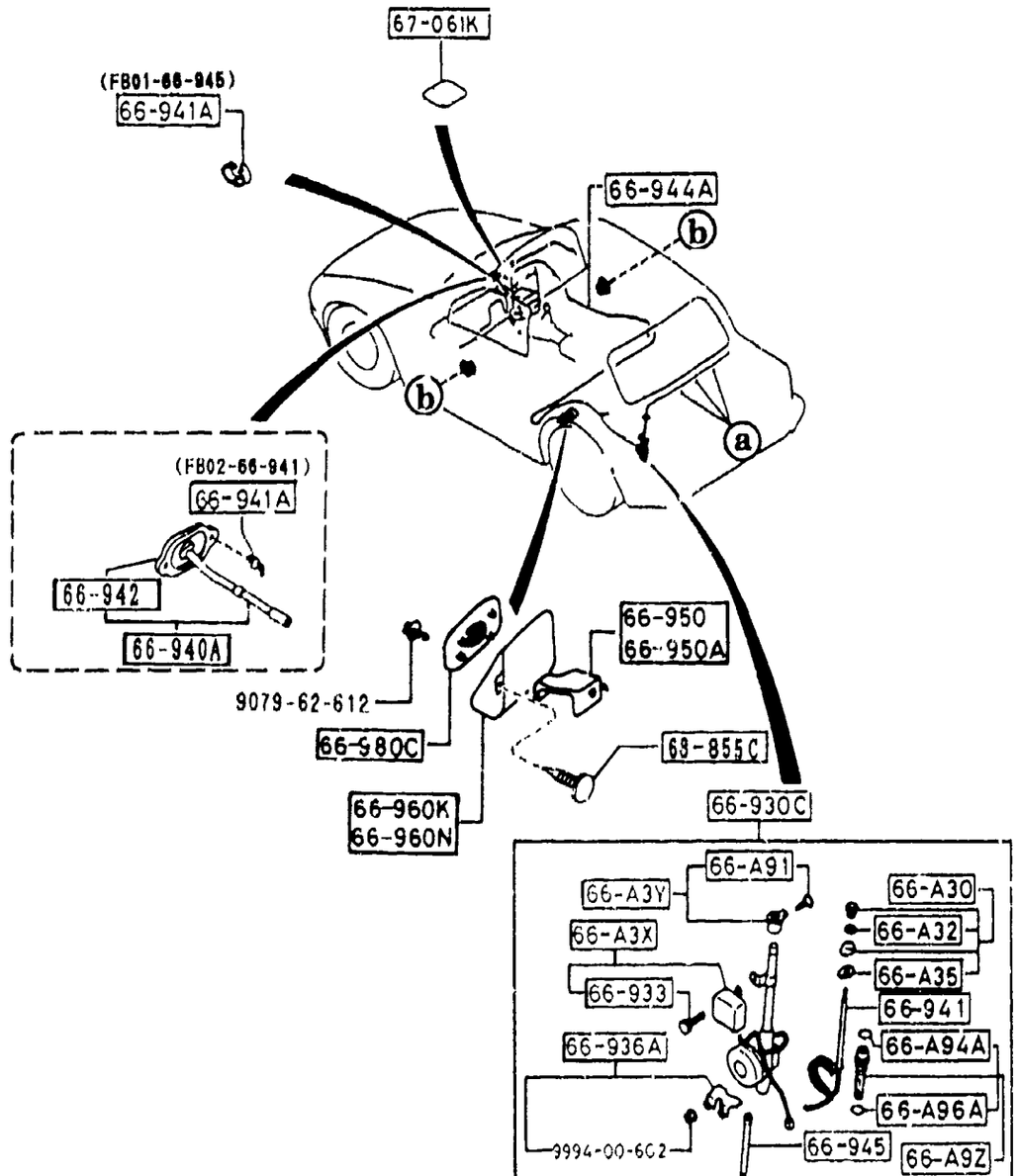
67-061K
(FB01-66-945)
66-941A
66-944A
(FB02-66-941)
66-941A
66-942
66-940A
9079-62-612
66-950
66-950A
66-980C
63-855C
66-960K
66-960N
66-930C
66-A91
66-A3Y
66-A3X
66-933
66-936A
9994-00-602
66-945
66-A9Z
66-A30
66-A32
66-A35
66-941
66-A94A
66-A96A

(CPE) (THIS ILLUSTRATION CONSISTS OF 2 PAGES)

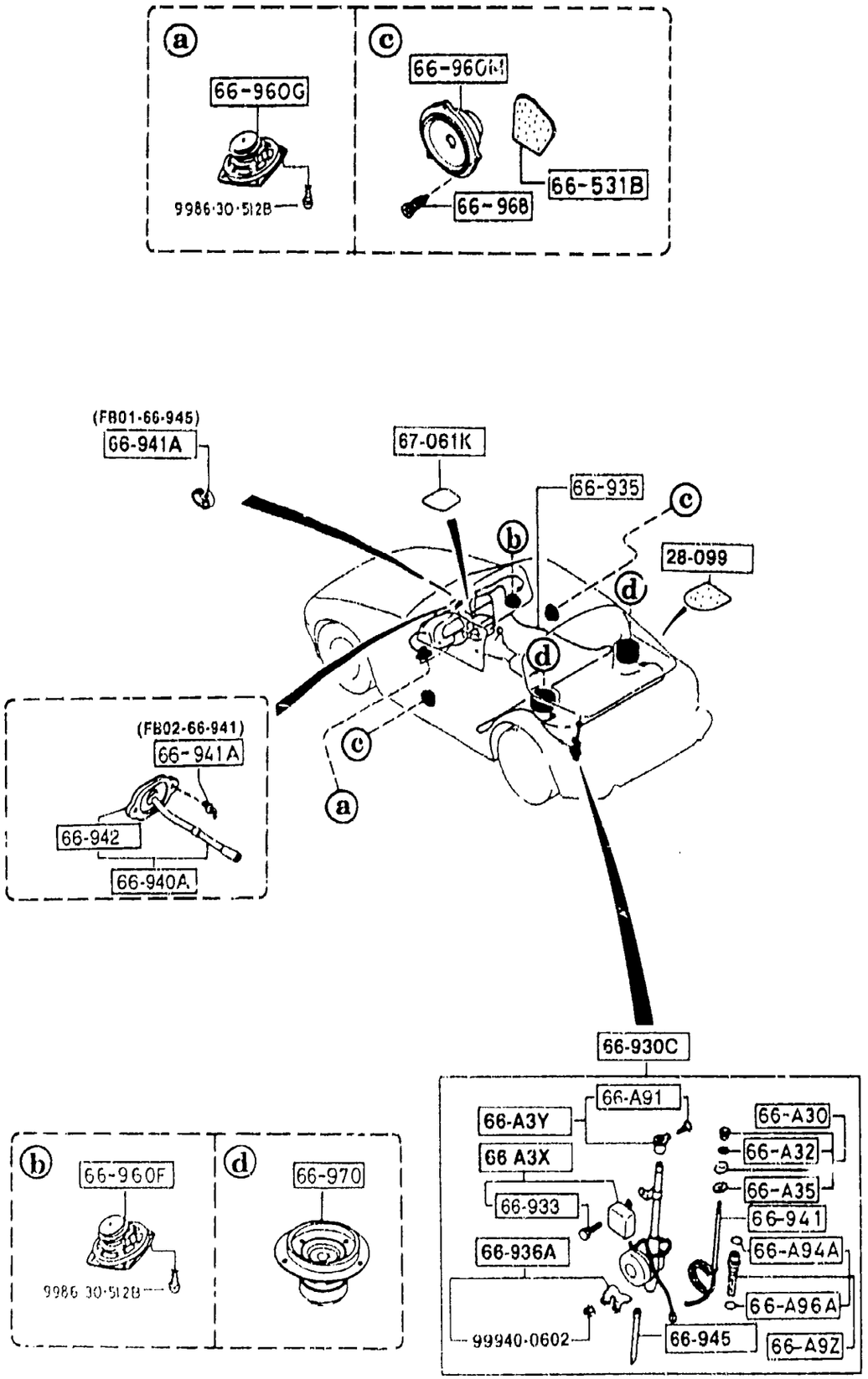

PART NO.	QTY	MODEL/RESTRICTION	MODEL/RESTRICTION	MODEL/RESTRICTION	FROM-TO
28-099		PAD,REAR SUSPENSION			
FB01-28-099	2	(CPE)			
45-961B		CAP			
H002-45-961	3	(CONVERTIBLE)			
66-A3X		RELAY,MOTOR-ANTENNA			
HE02-66-A3X	1				
66-A3Y		PLATE,EARTH-MOTOR ANTENNA			
FB01-66-A3Y	1	(CPE)			
FB67-66-A3Y	1	(CONVERTIBLE)			
66-A30		NUT,MOUNTING-ANTENNA			
FB01-66-A30	1	(CPE)			
FB67-66-A30	1	(CONVERTIBLE)			
66-A32		RING,'O'-MOUNTING ANTENNA			
FB01-66-A32	1				
66-A35		PAD,MOUNTING-ANTENNA			
FB01-66-A35	1	(CPE)			
FB67-66-A35	1	(CONVERTIBLE)			
66-A9Z		INSULATOR,ROD-ANTENNA			
HE02-66-A9Z	1				
66-A91		SCREW,EARTH PLATE-ANTENNA			
FB01-66-A91	1				
66-A94A		RING,'O'-ANTENNA			
HE02-66-A94	1				
66-A96A		RING,'O'-ANTENNA			
HE02-66-A96	1				
66-531B		PAD			
FC01-66-9B6	2				
66-930C		ANTENNA,MOTOR-RADIO			

(CONVERTIBLE)

(THIS ILLUSTRATION CONSISTS OF 2 PAGES)

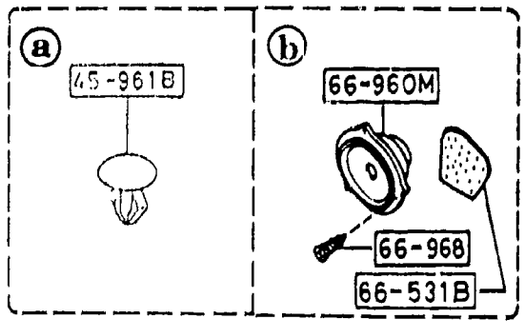

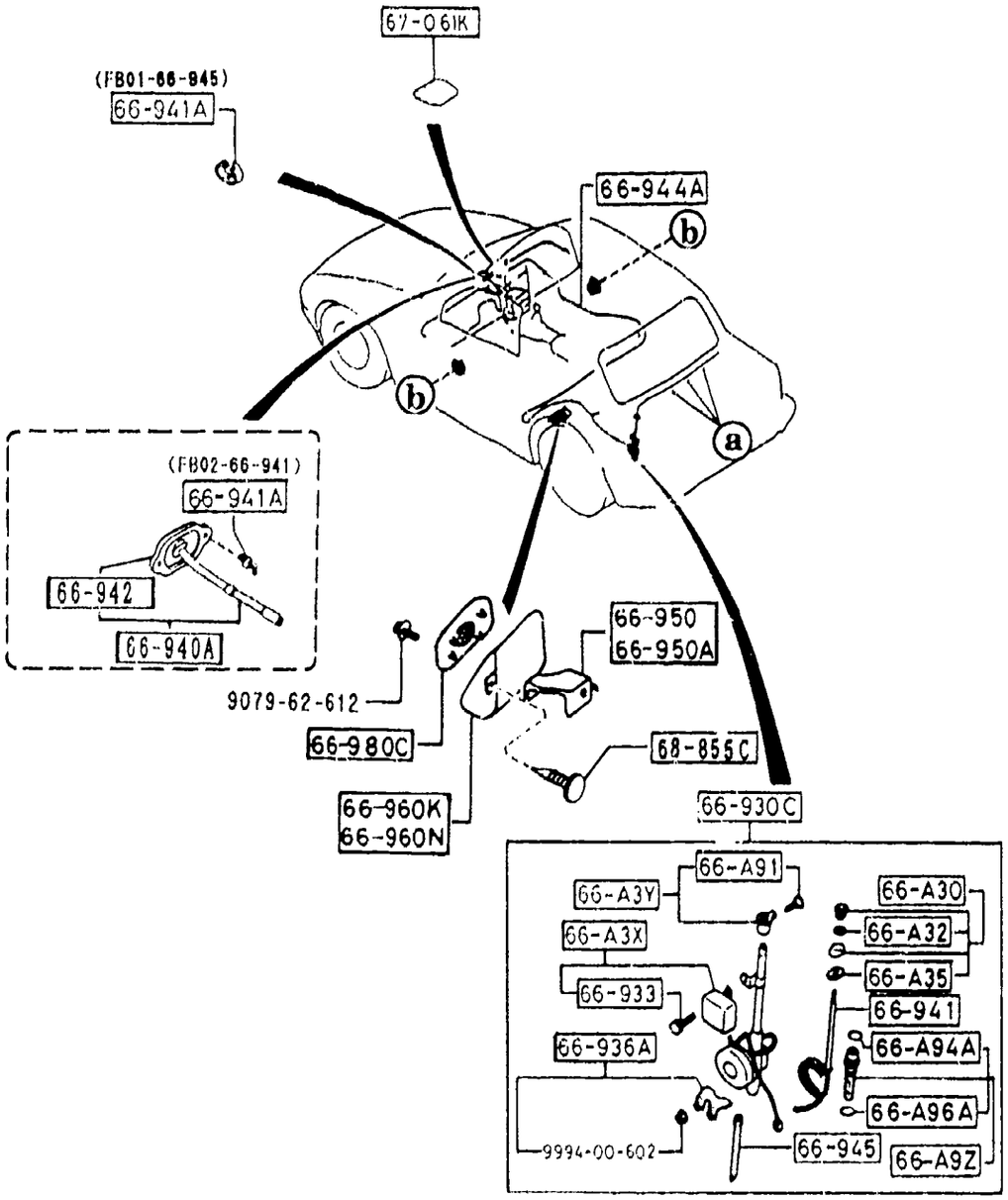

PART NO.	QTY	MODEL/RESTRICTION	MODEL/RESTRICTION	MODEL/RESTRICTION	FROM-TO
CONT'D					
FB01-66-930B	1	(CPE)			
FB67-66-930	1	(CONVERTIBLE)			
66-933		SCREW,ANTENNA			
FB01-66-A92	1				
66-935		FEEDER-ANTENNA			
FC01-66-940B	1	(CPE)			
66-936A		BRKT,MOTOR-ANTENA			
FB01-66-A9X	1				
66-940A		FEEDER & COVER			
FB02-66-940B	1				
66-941		POLE,ANTENNA			
FB01-66-A90	1				
66-941A		CLIP			
FB02-66-941	2				
FB01-66-945	1				
66-942		COVER,SOUND PROOF			
*FB02-66-942A	1				
66-944A		FEEDER,ANTENNA			
FB68-66-940B	1	(CONVERTIBLE)			
66-945		PIPE			
FB01-66-A9Y	1				
66-950		BRACKET(R),SPEAKER			
FC66-66-9BX	1	(CONVERTIBLE)			
66-950A		BRACKET(L),SPEAKER			
FC67-66-9BX	1	(CONVERTIBLE)			
66-960F		SPEAKER(R),LOUD-FRT			
FC02-66-960A	1	BASE, TURBO, (W/O C.DISC) (CPE)			

(CPE) (THIS ILLUSTRATION CONSISTS OF 2 PAGES)

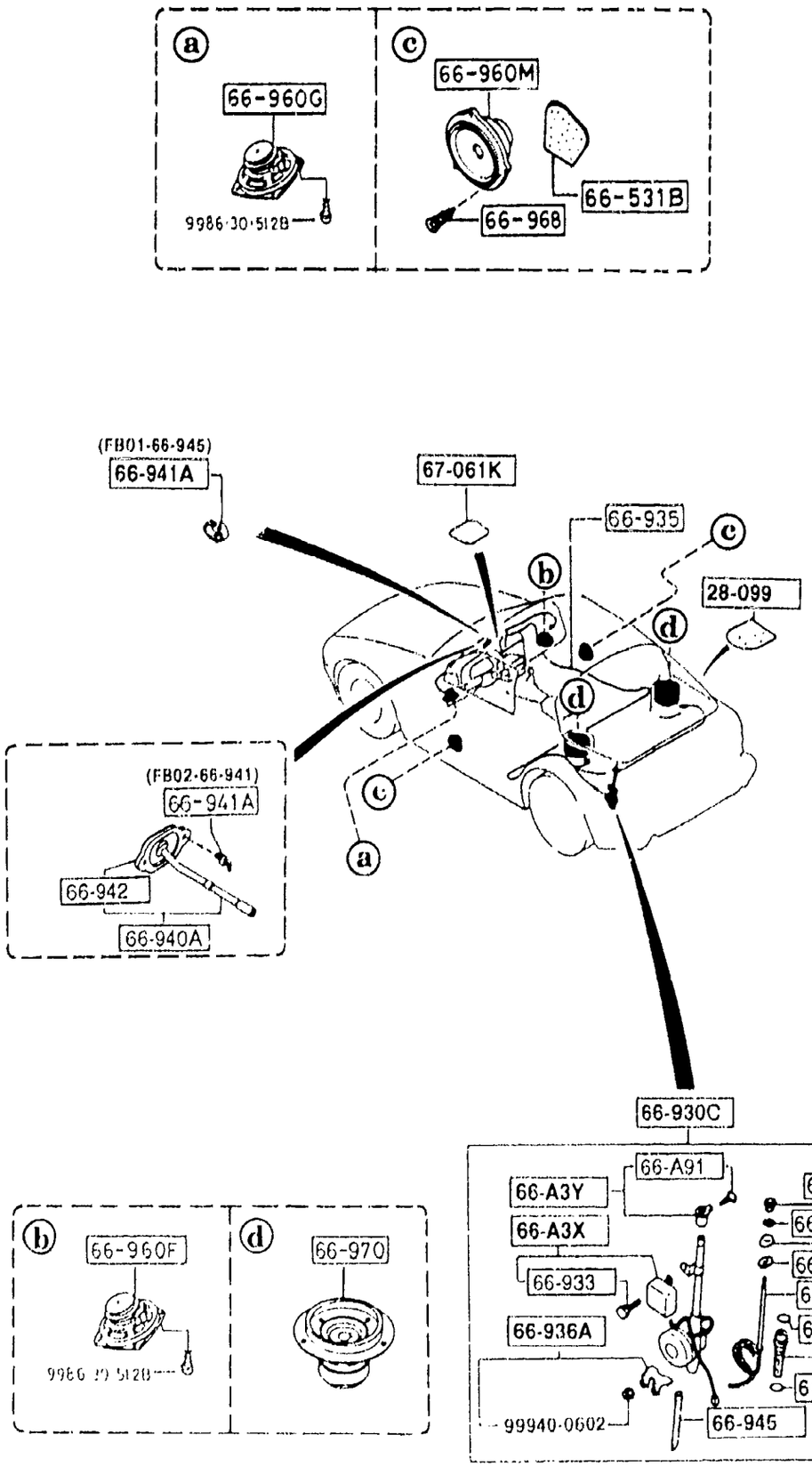

PART NO.	QTY	MODEL/RESTRICTION	MODEL/RESTRICTION	MODEL/RESTRICTION	FROM-TO
CONT'D					
FC03-66-960A	1	BASE-OPT-2, TURBO-OPT, (W/C.DISC) (CPE)			
+---------+					
| 66-960G |		SPEAKER(L),LOUD-FRONT			
+---------+					
FC01-66-960	1	BASE, TURBO, (W/O C.DISC) (CPE)			
FC04-66-960	1	BASE-OPT-2, TURBO-OPT, (W/C.DISC) (CPE)			
+---------+					
| 66-960K |		SPEAKER(R),LOUD-RR			
+---------+					
FC66-66-960A	1	(CONVERTIBLE)			
+---------+					
| 66-960M |		SPEAKER,DOOR			
+---------+					
FC07-66-960	2	BASE, (W/O EQUALIZER,W/O C.DISC) (CPE)			
FC08-66-960	2	OPT-2, (W/AE SYSTEM EQUALIZER,W/C.DISC) (CPE)			
FC12-66-960	2	TURBO, (W/EQUALIZER,W/O C.DISC) (CPE)			
FC33-66-960	2	(CONVERTIBLE)			
+---------+					
| 66-960N |		SPEAKER(L),REAR			
+---------+					
FC67-66-960A	1	(CONVERTIBLE)			
+---------+					
| 66-968 |		SCREW,LOUD SPEAKER-DOOR			
+---------+					
FC02-66-968	6	TURBO, BASE-OPT-2, TURBO-OPT, (W/EQUALIZER) (W/AE SYSTEM EQUALIZER) (CPE)			
FC02-66-968	6	(CONVERTIBLE)			
+---------+					
| 66-970 |		SPEAKER,LOUD-REAR			
+---------+					
FC09-66-960	2	BASE, TURBO, (W/O C.DISC) (CPE)			
FC10-66-960	2	BASE-OPT-2, TURBO-OPT,			

(CONVERTIBLE)

(THIS ILLUSTRATION CONSISTS OF 2 PAGES)

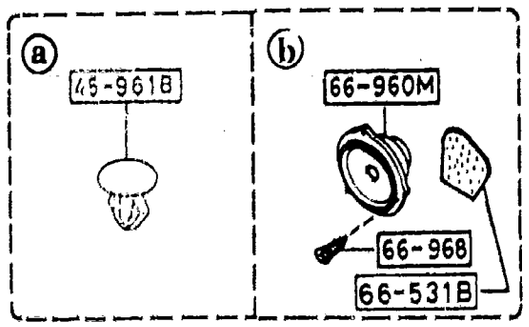

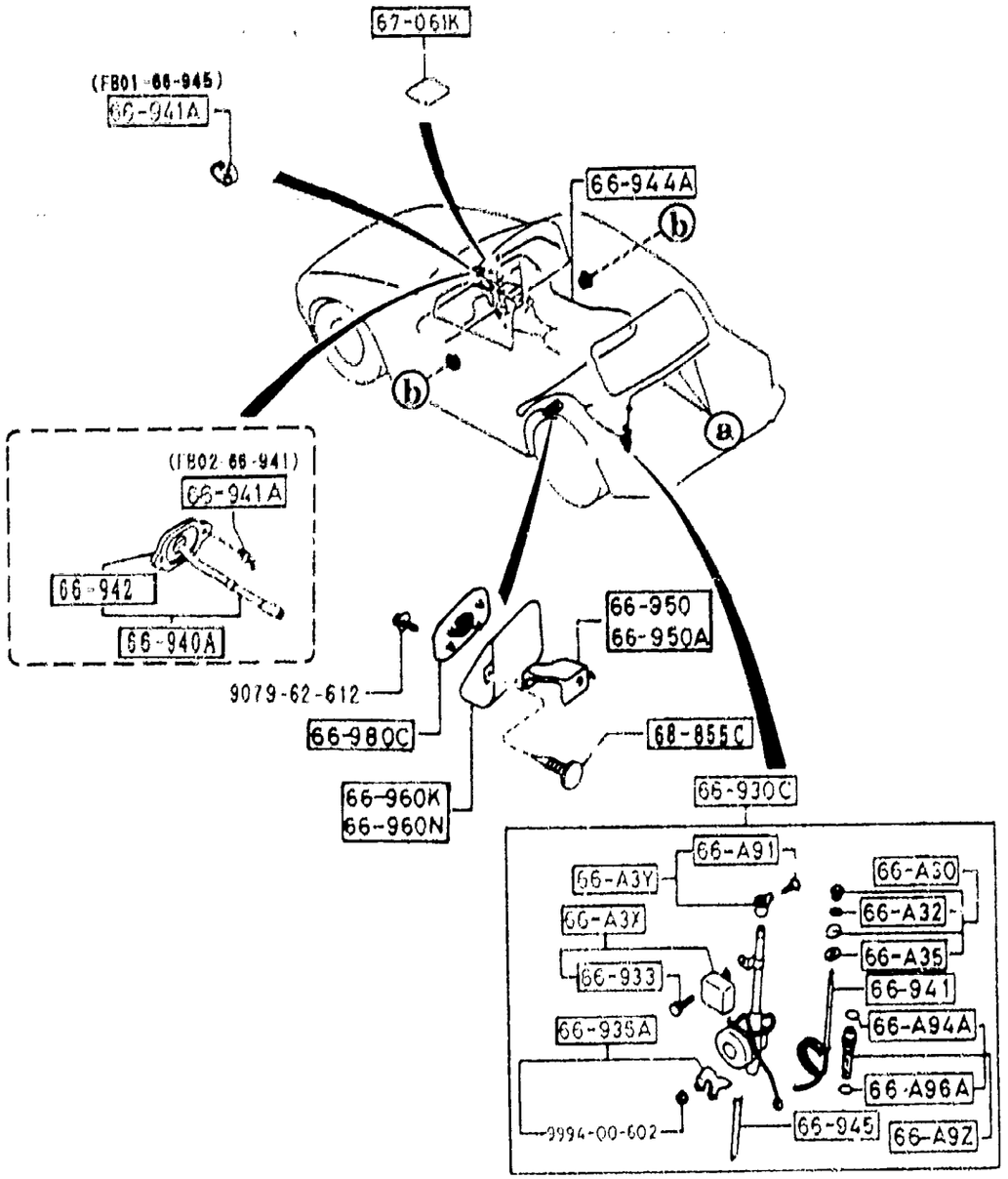

PART NO.	QTY	MODEL/RESTRICTION	MODEL/RESTRICTION	MODEL/RESTRICTION	FROM-TO
CONT'D		(W/C,DISC) (CPE)			
66-980C		GRILLE,SPEAKER			
FC66-66-980A	2	(CONVERTIBLE)			
02	INT-	FD8 BLACK			
48	INT-	FD9 BLUE			
67-061K		PAD,PROTECTOR			
G001-67-061	1				
68-855C		FASTENER			
G043-68-865B	2	(CONVERTIBLE)			
00	ANT-	FE1 FE0 FD8 FD9 BLACK			

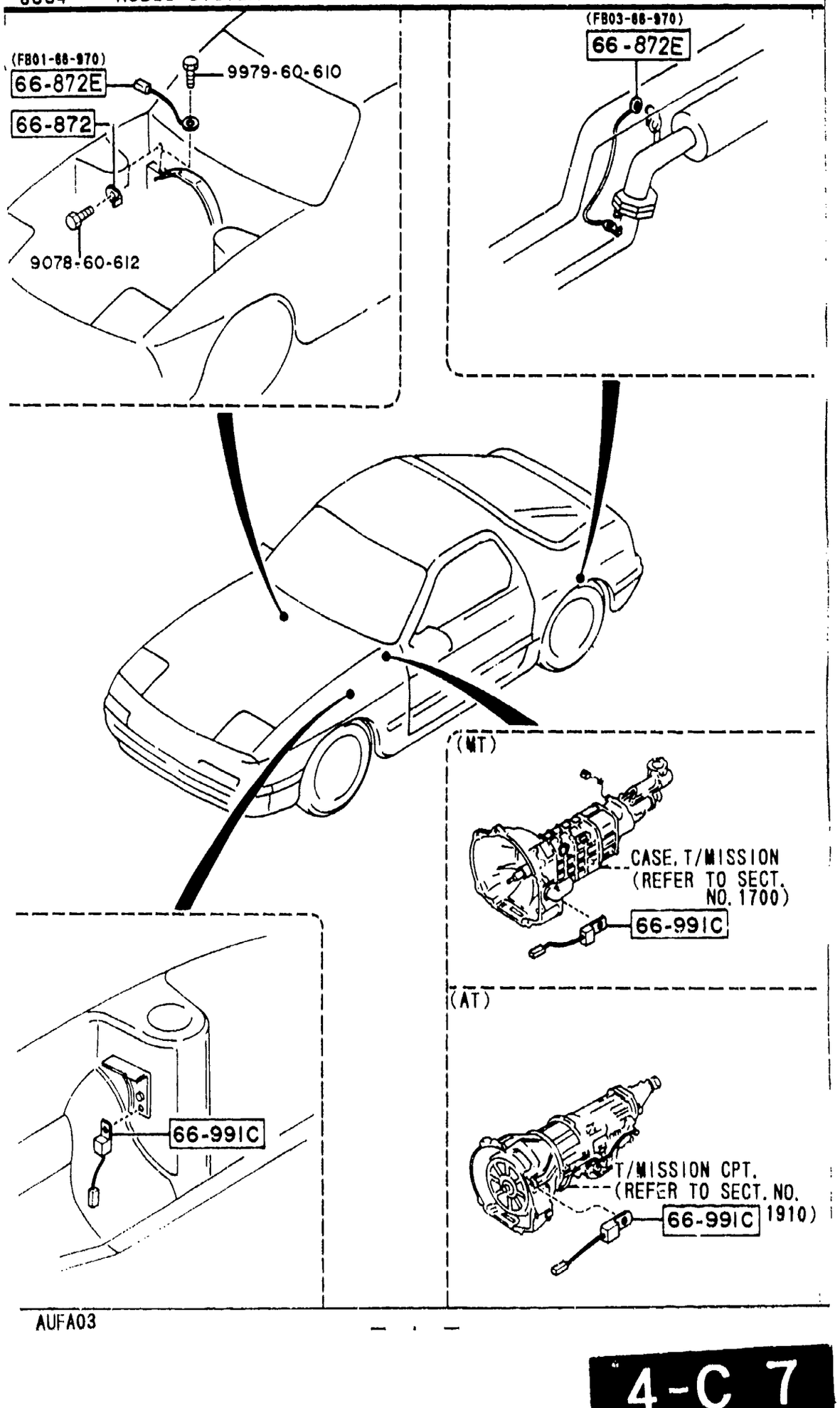

AUFA03

6684 -1 ✱ AUDIO SYSTEMS(NOISE SUPPRESSOR & EARTH CORD)

PART NO.	QTY	MODEL/RESTRICTION	MODEL/RESTRICTION	MODEL/RESTRICTION	FROM-TO
66-872		TAB,EARTH			
FB01-66-994A	1				
66-872E		CORD,EARTH			
FB01-66-970	1	T/M CASE - DASH.			
FB03-66-970	1	EX.PIPE - BODY			
66-991C		CONDENSER			
FB01-66-991B	2				

CAT. AUFA03-07

1993-12

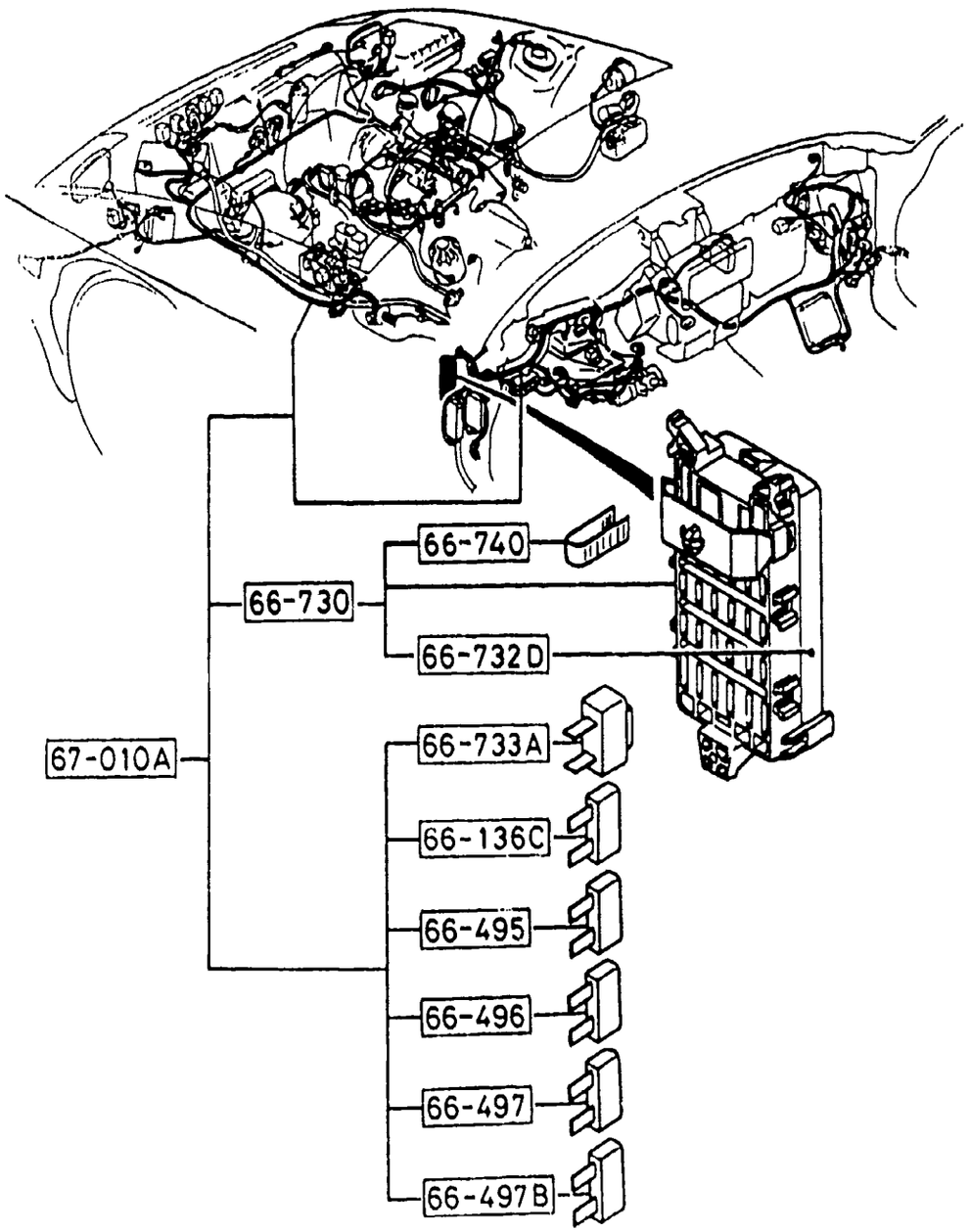

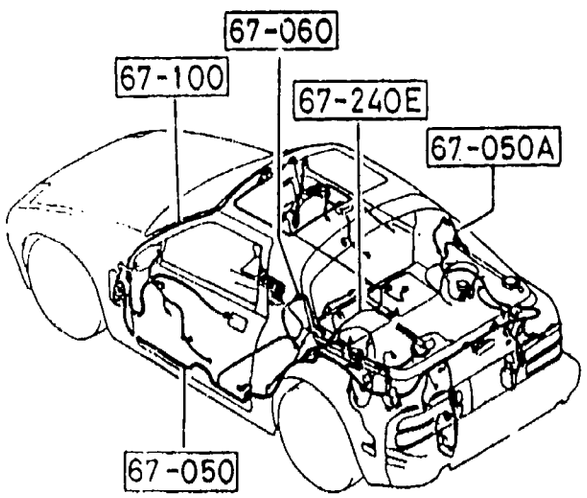

PART NO.	QTY	MODEL/RESTRICTION	MODEL/RESTRICTION	MODEL/RESTRICTION	FROM-TO
66-136C		FUSE(7.5A)			
99705-1107	1				
66-495		FUSE(10A)			
99705-1110	7	(W/RR WIPER)			
66-496		FUSE(15A)			
99705-1115	7	((W/O TURBO))(MT))			
99705-1115	9	((W/O TURBO))(AT)) (TURBO)			
66-497		FUSE(20A)			
99705-1120	3				
66-497B		FUSE(30A)			
99705-1130	2	(W/RR WIPER)			
66-730		BLOCK,FUSE			
FC01-66-730	1				
66-732D		COVER,FUSE BLOCK			
FC01-66-731	1	FURUKAWA			
66-733A		BREAKER			
H001-66-733	2				
66-740		HOLDER,FUSE			
H001-66-739	1				
67-010A		HARNESS,FRONT			
FC04-67-010G	1	BASE-OPT, (W/POWER WIND.) ((W/O TURBO))(MT))			
FC09-67-010G	1	BASE-OPT, (W/POWER WIND.) ((W/O TURBO))(AT))			
FC18-67-010F	1	(TURBO)			
67-050		HARNESS,REAR			
FC04-67-050F	1	(W/O TURBO)			
FC18-67-050F	1	(TURBO)			

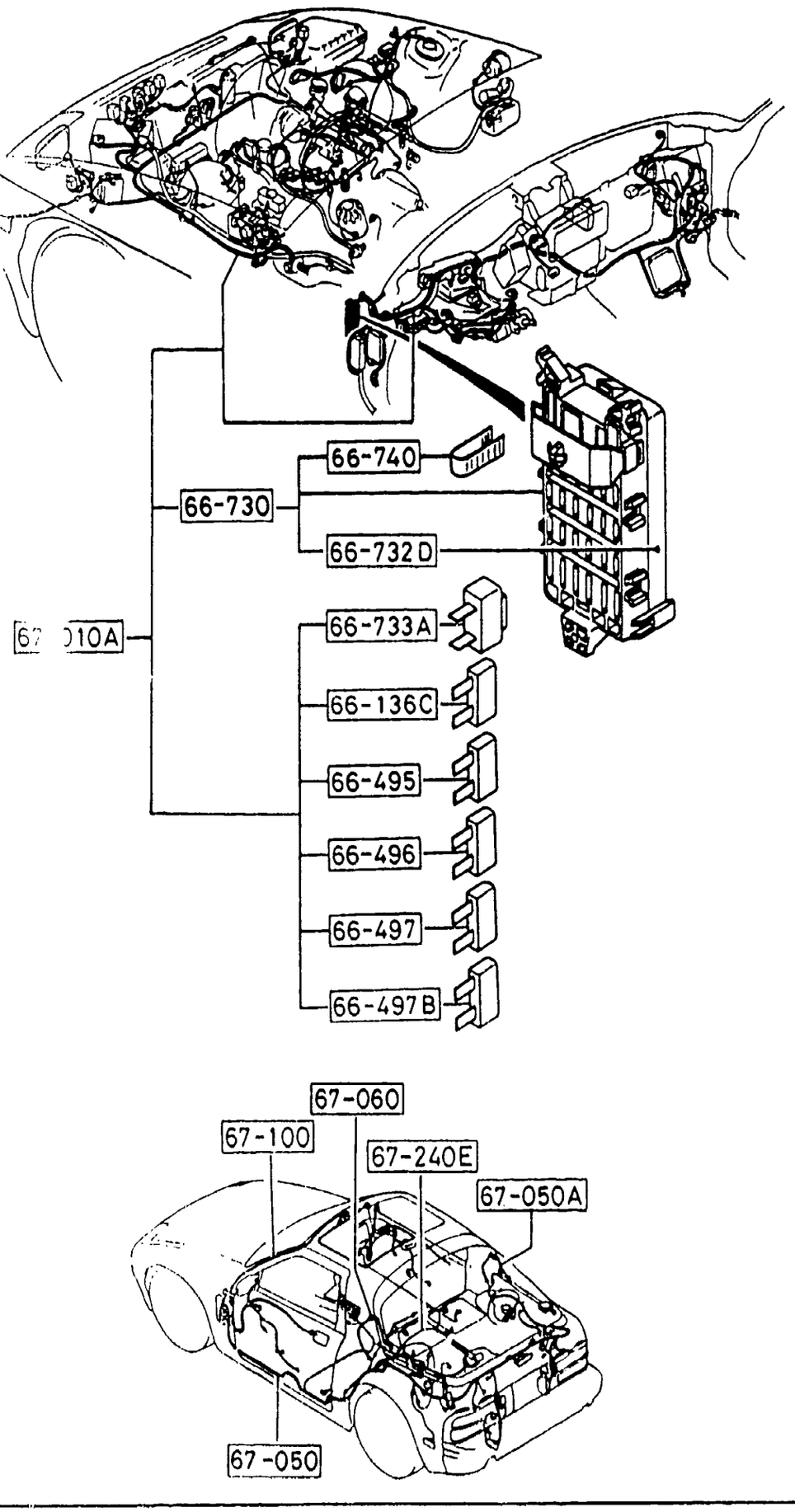

PART NO.	QTY	MODEL/RESTRICTION	MODEL/RESTRICTION	MODEL/RESTRICTION	FROM-TO
67-050A		HARNESS NO.1,REAR			
FB02-67-060B	1				
67-060		HARNESS NO.2,REAR			
FB01-67-060B	1				
67-100		HARNESS,INT.LAMP			
FC01-67-100C	1	(W/O SUN-RF)			
FC03-67-100C	1	(SUNROOF)			
67-240E		WIRING,STORAGE			
FB01-67-240A	1				

6700 A WIRING HARNESSES(FRONT & REAR)
(CONVERTIBLE)

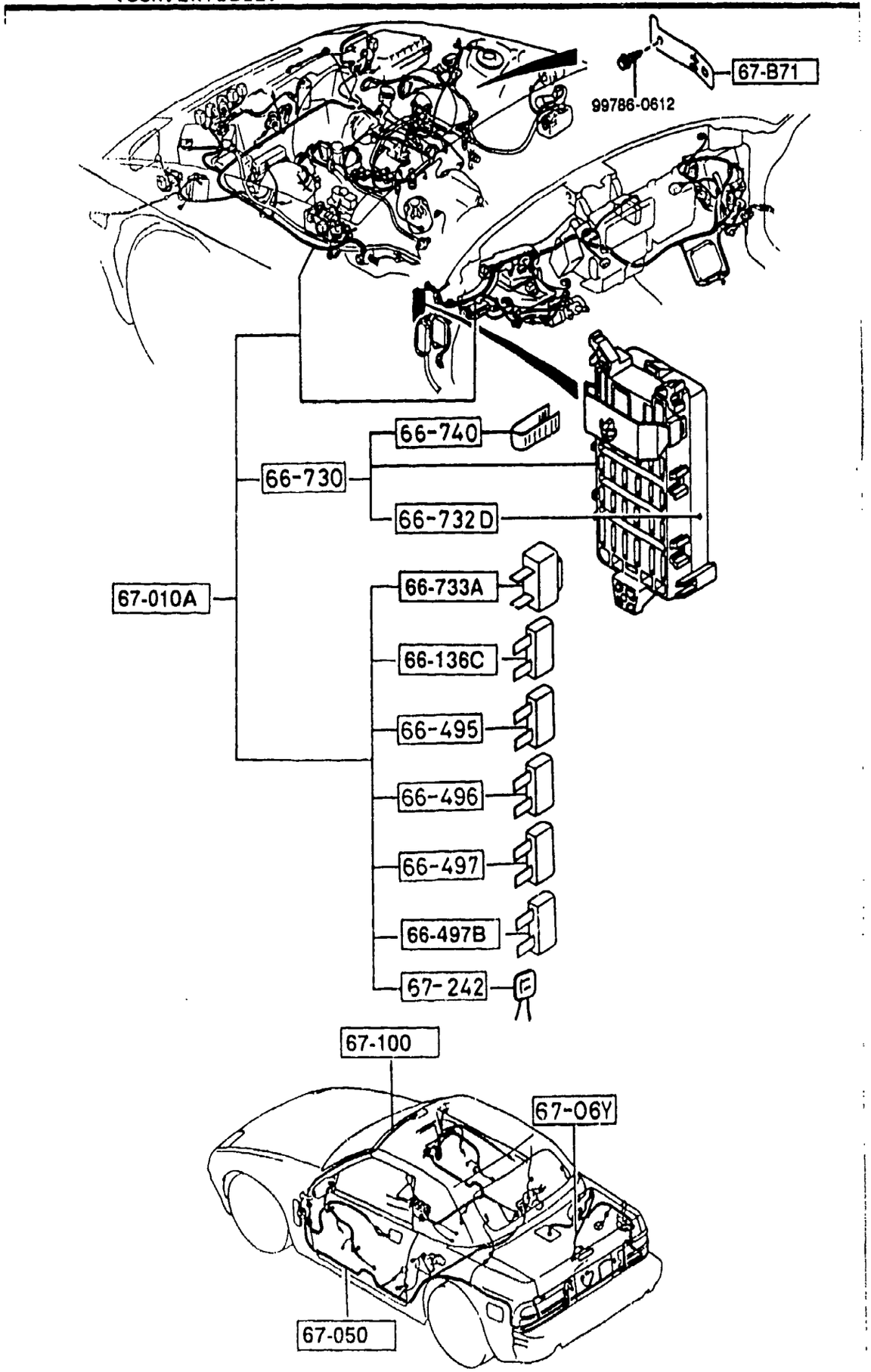

6700 A-1 WIRING HARNESSES(FRONT & REAR)
(CONVERTIBLE)

PART NO.	QTY	MODEL/RESTRICTION	MODEL/RESTRICTION	MODEL/RESTRICTION	FROM-TO
66-136C		FUSE(7.5A)			
99705-1107	1				
66-495		FUSE(10A)			
99705-1110	6				
66-496		FUSE(15A)			
99705-1115	7	(MT)			
99705-1115	8	(AT)			
66-497		FUSE(20A)			
99705-1120	3				
66-497B		FUSE(30A)			
99705-1130	2				
66-730		BLOCK,FUSE			
FC66-66-730A	1				
66-732D		COVER,FUSE BLOCK			
FC66-66-731	1				
66-733A		BREAKER			
H001-66-733	2				
66-740		HOLDER,FUSE			
H001-66-739	1				
67-B71		BRACKET,HARNESS			
*FC66-67-BW1A	1				
67-010A		HARNESS,FRONT			
FC66-67-010E	1	(MT)			
FC67-67-010E	1	(AT)			
67-050		HARNESS,REAR			
FC66-67-050B	1				
67-06Y		HARNESS NO.3,REAR			
F055-67-06YB	1				

6700 A WIRING HARNESSES(FRONT & REAR)
(CONVERTIBLE)

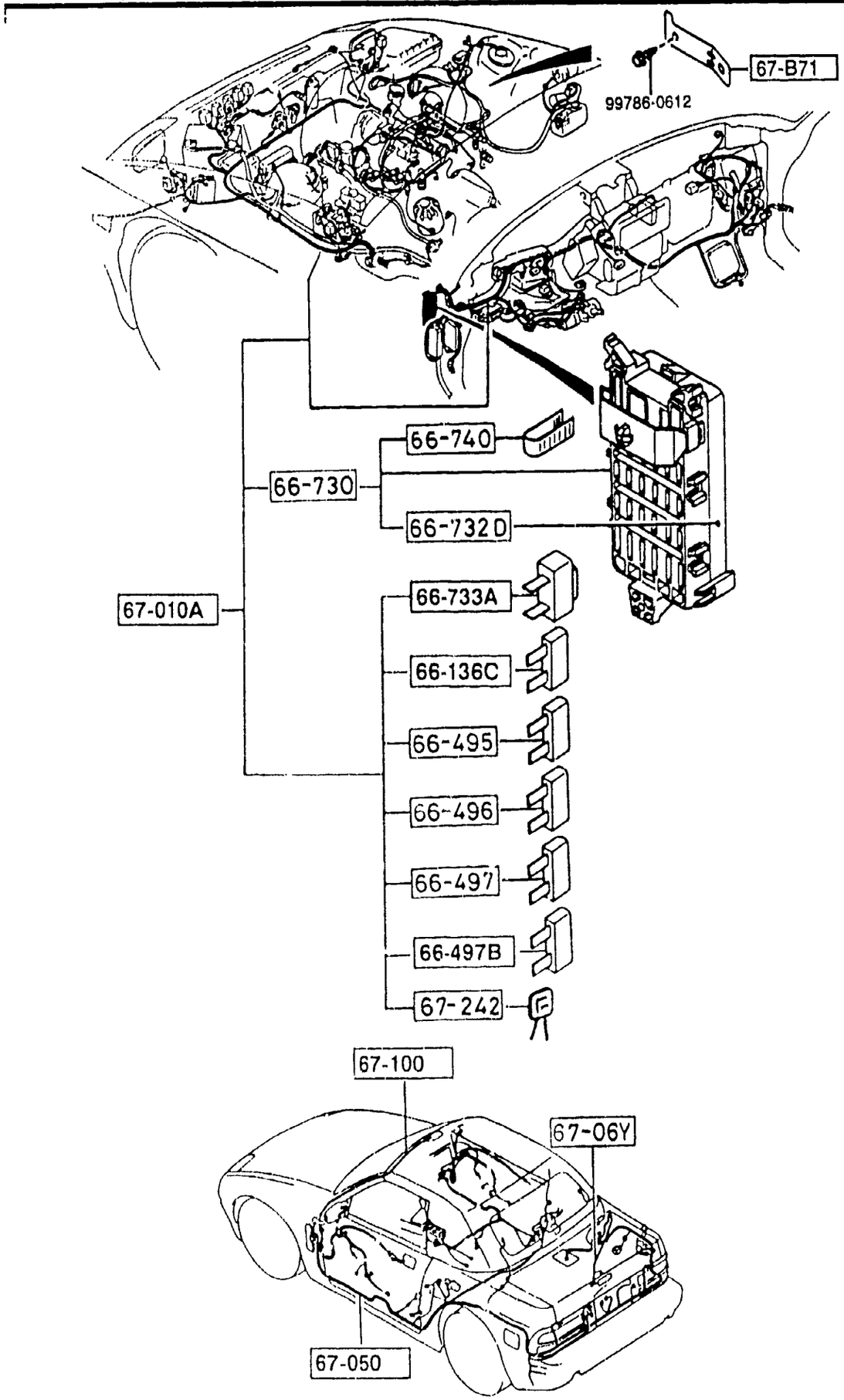

6700 A-2 * WIRING HARNESSES(FRONT & REAR)
(CONVERTIBLE)

PART NO.	QTY	MODEL/RESTRICTION	MODEL/RESTRICTION	MODEL/RESTRICTION	FROM-TO
67-100		HARNESS, INT. LAMP			
FC33-67-100	1				
67-242		RECTIFIER			
8871-67-242	1				

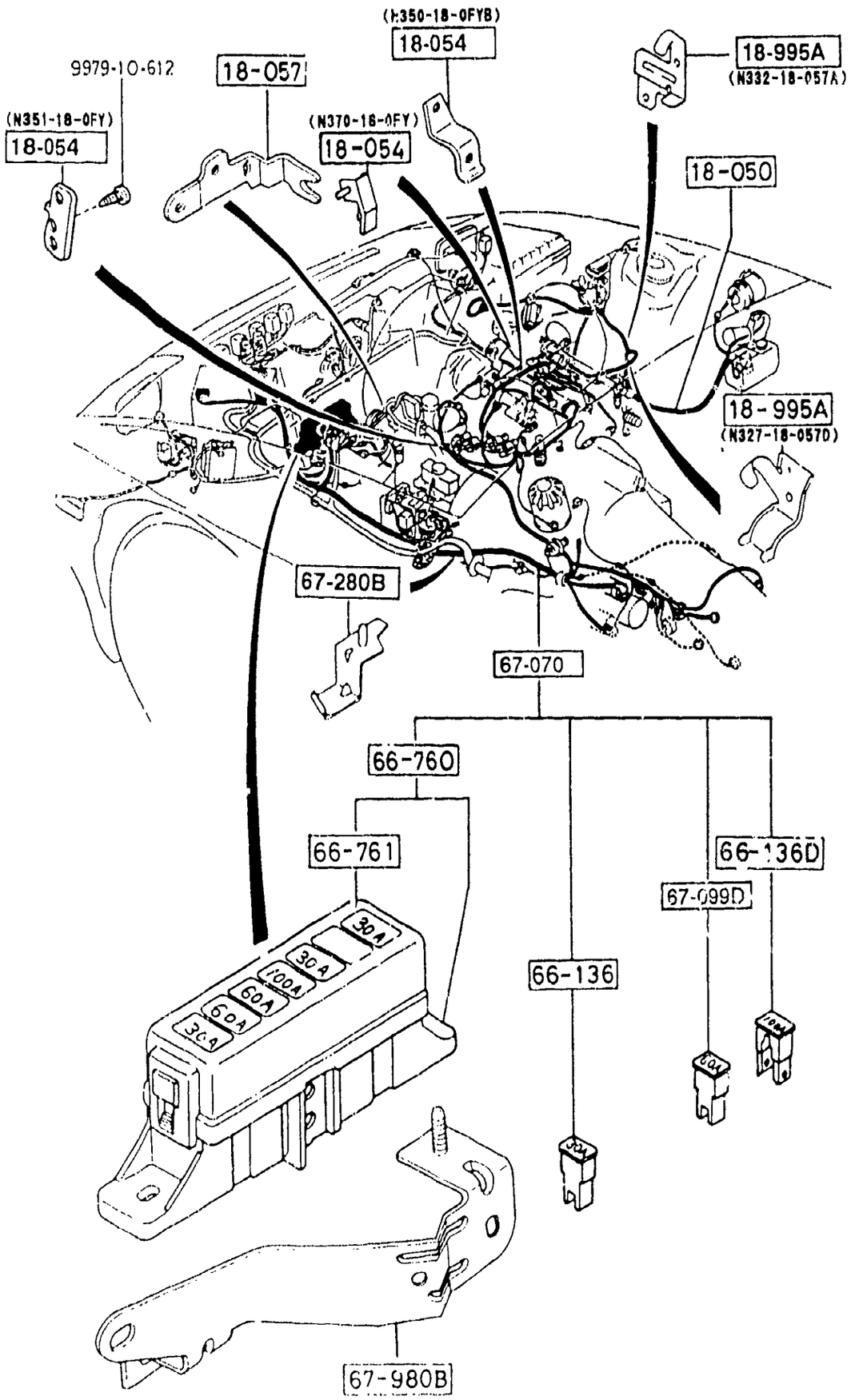

PART NO.	QTY	MODEL/RESTRICTION	MODEL/RESTRICTION	MODEL/RESTRICTION	FROM-TO
18-050		WIRING,ENGINE			
N350-18-05ZD	1	(W/O TURBO)			
N370-18-05ZD	1	(TURBO)			
18-054		BRACKET,HOLE-ENG.WIRING			
N350-18-0FYB	1	(W/O TURBO)			
N351-18-0FY	1	(W/O TURBO)			
N370-18-0FY	1	(TURBO)			
18-057		BRACKET,CLIP-ENG.WIRING			
N350-18-057	1				
18-995A		BRACKET,CLIP			
N327-18-057D	1				
N332-18-057A	1	(W/RR WIPER)			
66-136		FUSE(30A)			
H115-67-099	3				
66-136D		FUSE(100A)			
FC01-67-099	1				
66-760		BLOCK,MAIN FUSE			
FC01-66-760	1				
66-761		COVER,MAIN FUSE BLOCK			
FC01-66-762	1				
67-070		HARNESS,ENGINE			
FC01-67-070F	1	((W/O TURBO))(MT))			
FC07-67-070F	1	((W/O TURBO))(AT))			
FC17-67-070G	1	(TURBO)			
67-099D		FUSE(60A)			
*FB01-67-099	1	60A ((W/O TURBO))(MT))			
*FB01-67-099	2	60A (TURBO) ((W/O TURBO))(AT))			

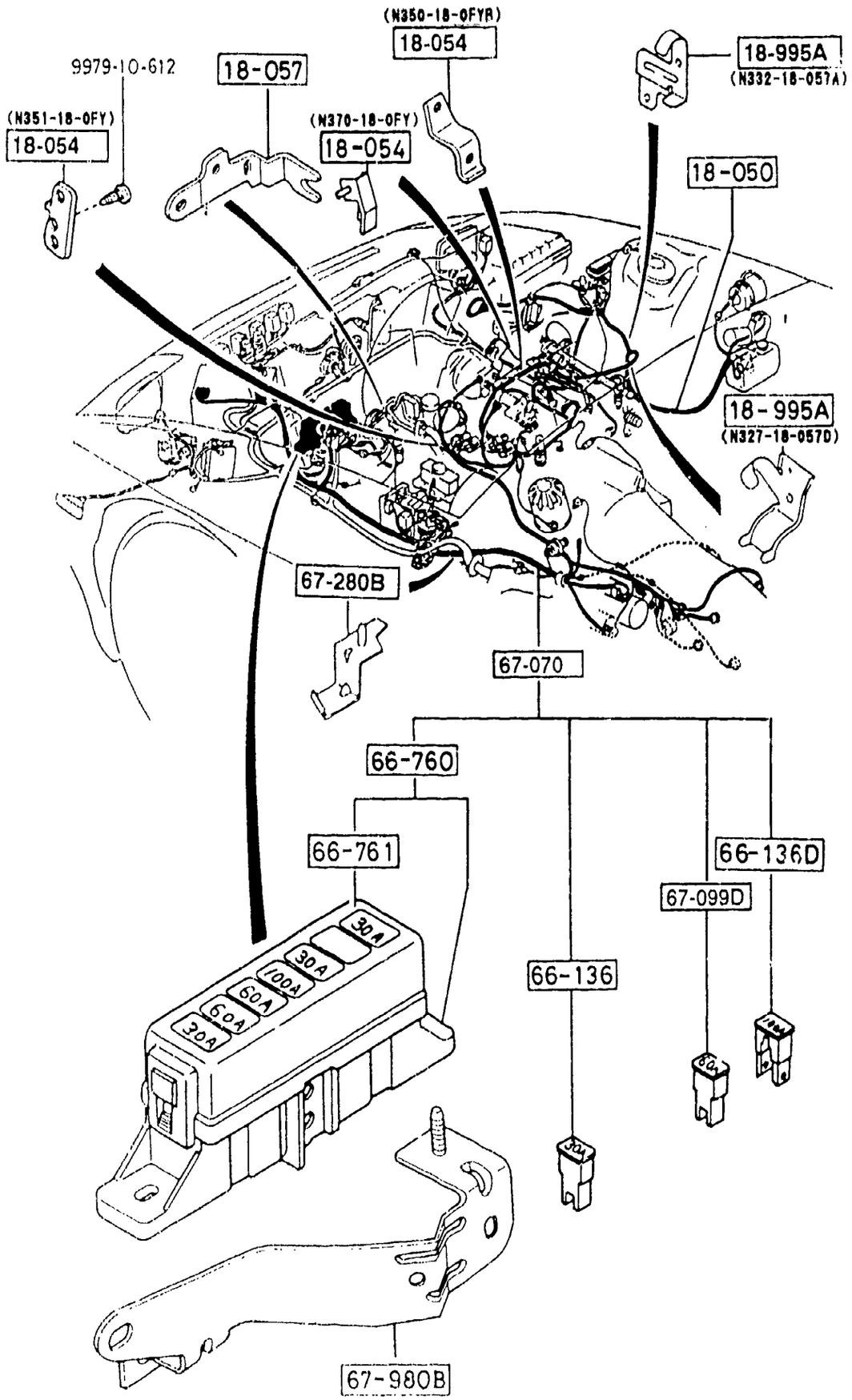

PART NO.	QTY	MODEL/RESTRICTION	MODEL/RESTRICTION	MODEL/RESTRICTION	FROM-TO
67-280B		BRACKET,BATT. CABLE			
FB01-67-280C	1				
67-980B		BRACKET,MAIN FUSE CA SE			
FB01-67-980E	1				

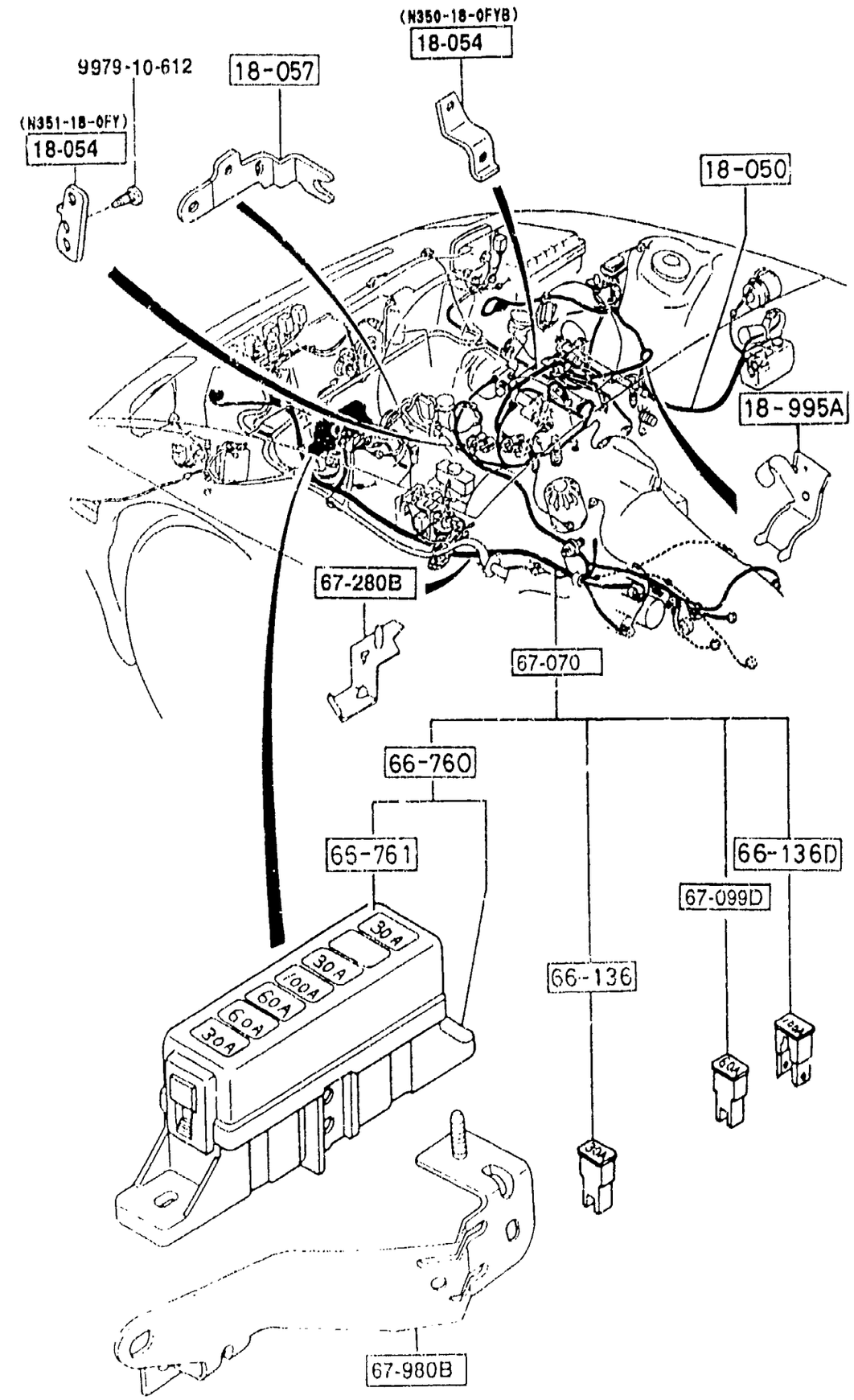

PART NO.	QTY	MODEL/RESTRICTION	MODEL/RESTRICTION	MODEL/RESTRICTION	FROM-TO
18-050		WIRING,ENGINE			
N361-18-05Z	1	('92 MODEL)			
N387-18-05ZC	1	('91 MODEL)			
18-054		BRACKET,HOLE-ENG.WIRING			
N350-18-0FYB	1				
N351-18-0FY	1				
18-057		BRACKET,CLIP-ENG.WIRING			
N350-18-057	1				
18-995A		BRACKET,CLIP			
N327-18-057D	1				
66-136		FUSE(30A)			
H115-67-099	4				
66-136D		FUSE(100A)			
FC01-67-099	1				
66-760		BLOCK,MAIN FUSE			
FC66-66-760A	1				
66-761		COVER,MAIN FUSE BLOCK			
FC66-66-762A	1				
67-070		HARNESS,ENGINE			
FC66-67-070B	1	(MT)			
FC67-67-070B	1	(AT)			
67-099D		FUSE(60A)			
*FB01-67-099	1	60A (MT)			
*FB01-67-099	2	60A (AT)			
67-280B		BRACKET,BATT. CABLE			
FB01-67-280C	1				
67-980B		BRACKET,MAIN FUSE CASE			
FB01-67-980E	1				

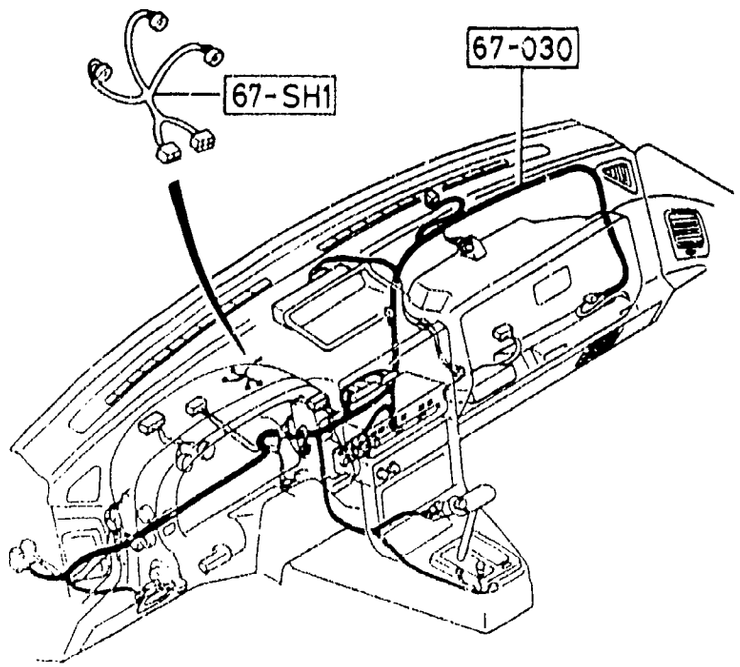

PART NO.	QTY	MODEL/RESTRICTION	MODEL/RESTRICTION	MODEL/RESTRICTION	FROM·TO
67-SH1		CORD,SHORT			
FC01-67-SH0D	1	(MT)			
FC07-67-SH0D	1	(AT)			
67-030		HARNESS,INSTRUMENT			
FC01-67-030D	1	((CPE))(MT))			
FC07-67-030D	1	((CPE))(AT))			
FC66-67-030B	1	((CONVERTIBLE))(MT))			
FC67-67-030B	1	((CONVERTIBLE))(AT))			

6703 WIRING HARNESSES(DOOR,FLOOR/CEILING)

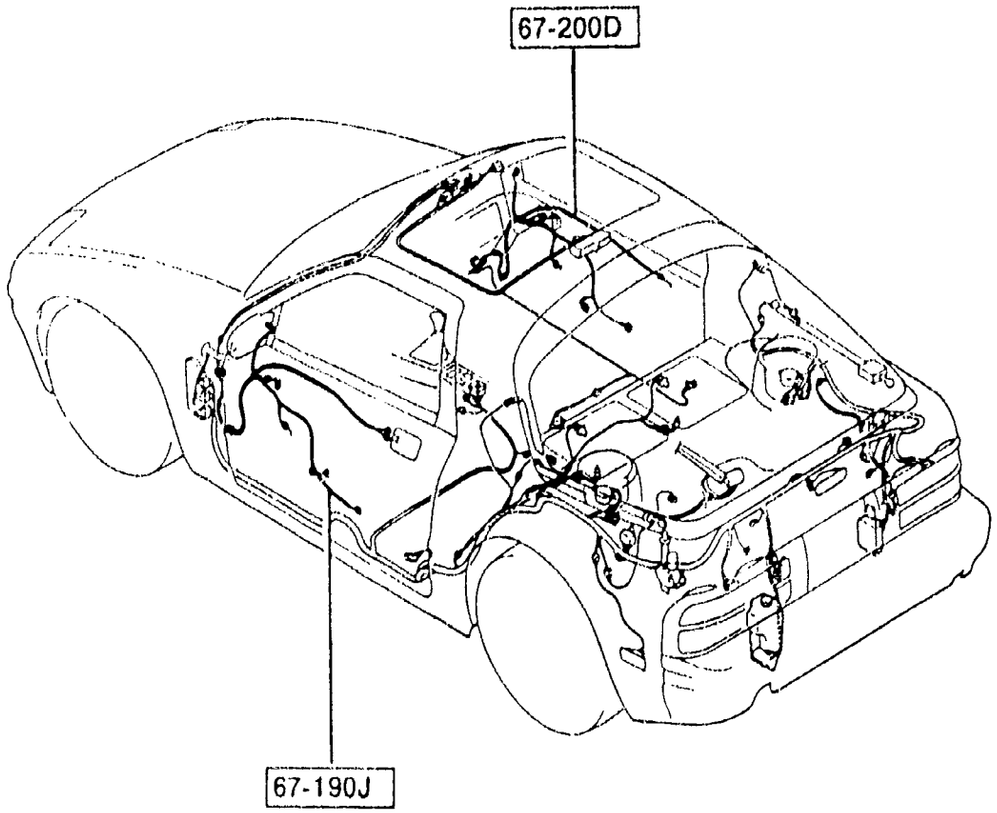

PART NO.	QTY	MODEL/RESTRICTION	MODEL/RESTRICTION	MODEL/RESTRICTION	FROM-TO
67-190J		HARNESS,DOOR-DRIVER SIDE			
FC04-67-190F	1	(CPE)			
FC33-67-190F	1	(CONVERTIBLE)			
67-200D		HARNESS,DOOR-PASSENGER SIDE			
FC04-67-200F	1	(CPE)			
FC33-67-200F	1	(CONVERTIBLE)			

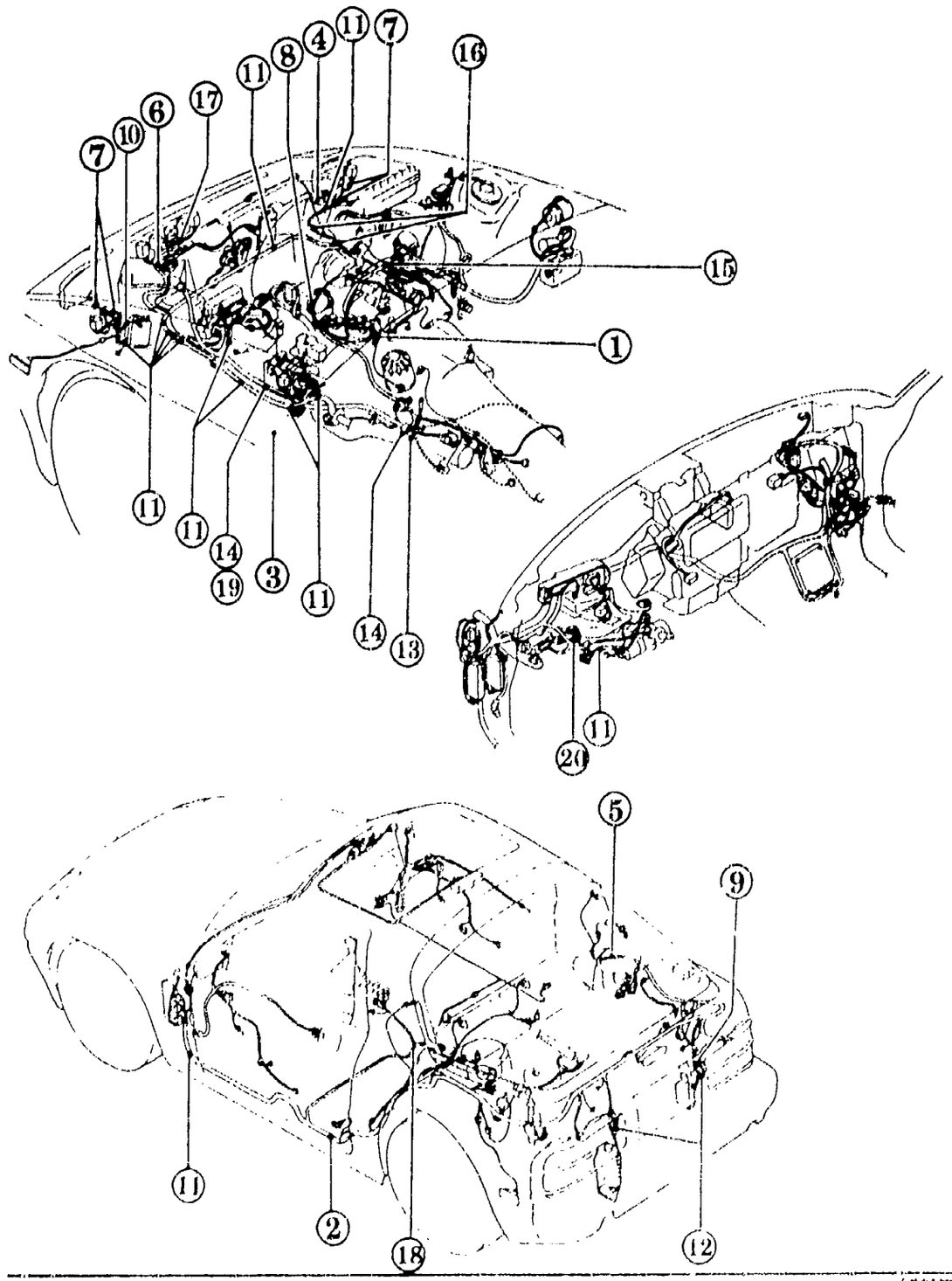

AUFA03

(CONT'D)

① 18-141E (N319-18-14Y)	① 18-141E (N350-18-14Y)	② 20-451	③ 45-961B	④ 66-941A
⑤ 66-941C	⑥ 67-012A	⑦ 67-014A	⑧ 67-019	⑨ 67-031B
⑩ 67-051E (UB42-67-051)	⑪ 67-051E (M029-67-051A)	⑫ 67-052J	⑬ 67-072A (FC01-67-072A)	⑭ 67-073
⑮ 67-073B	⑯ 67-254 (FC04-51-674)	⑰ 67-254 (S113-67-254A)	⑱ 67-293	⑲ 67-072A (HE20-67-072)
⑳ 14-726				

AUFA03

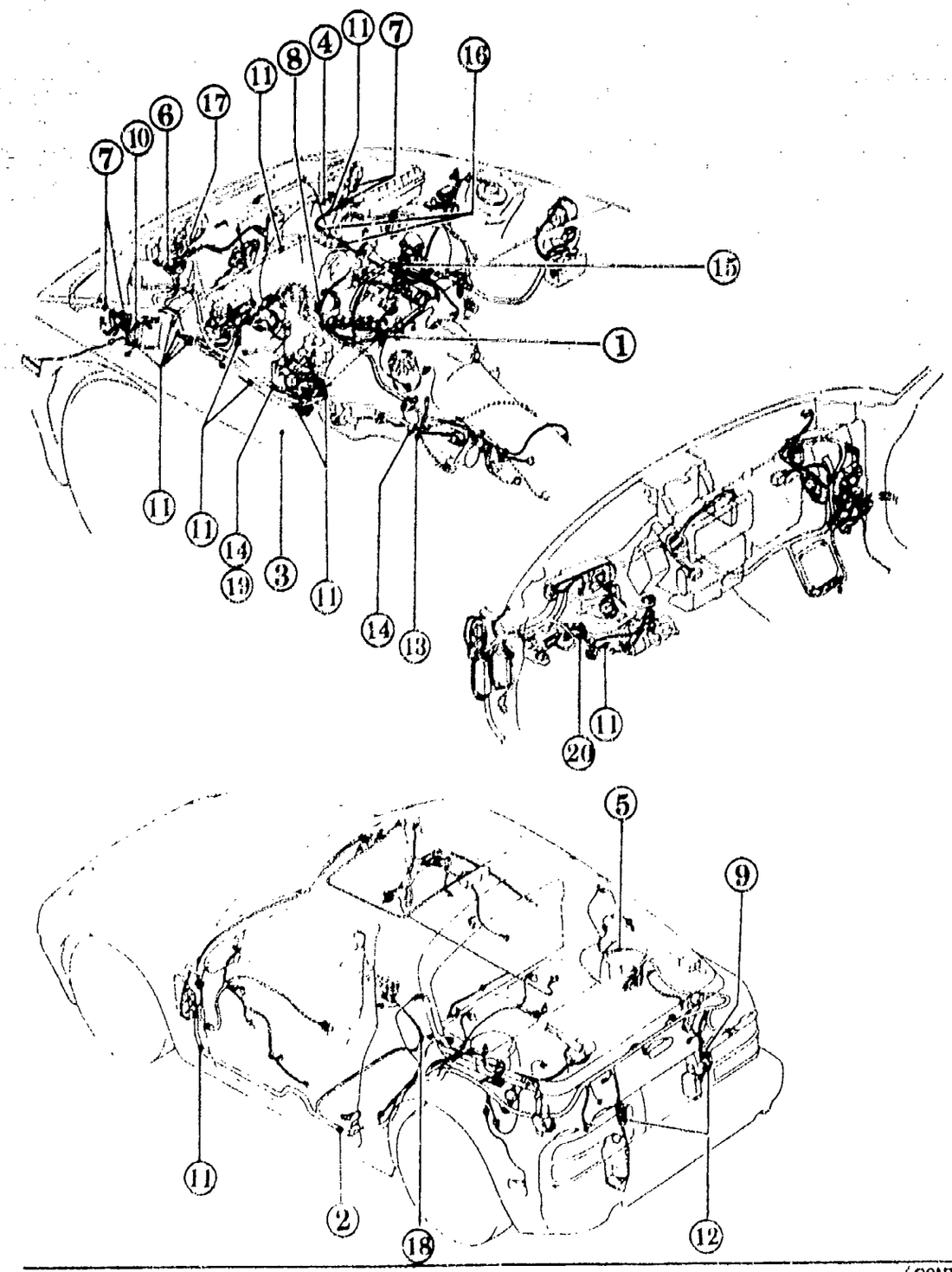

PART NO.	QTY	MODEL/RESTRICTION	MODEL/RESTRICTION	MODEL/RESTRICTION	FROM-TO
14-726		BAND			
*N304-14-726	1	(CONVERTIBLE)			
18-141E		SUPPORTER,CORD			
N319-18-14Y	1	(TURBO)			
N350-18-14Y	1	(W/O TURBO)			
20-451		CLIP			
B612-20-468	1	(CONVERTIBLE)			
45-961B		CAP			
H002-45-961	1				
66-941A		CLIP			
GB08-66-941	1				
66-941C		CLIP			
UB42-66-971	1	(CPE)			
67-012A		CLIP			
FB01-67-012	1				
67-014A		CLIP			
FB01-67-014	4				
67-019		CLIP			
FB02-67-019A	1	(W/O TURBO)			
67-031B		CLIP			
UB42-67-031	1	(CPE)			
67-051E		CLIP			
UB42-67-051	1	((CONVERTIBLE)>(W/O TURBO))			
W029-67-051A	10	(CPE)			
W029-67-051A	13	(CONVERTIBLE)			
67-052J		CLIP			
B001-67-051	2	(CPE)			

4-N 7

(THIS ILLUSTRATION CONSISTS OF 2 PAGES)

① 18-141E 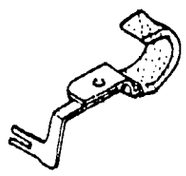 (N319-18-14Y)	① 18-141E 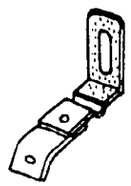 (N350-18-14Y)	② 20-451 	③ 45-961B 	④ 66-941A 
⑤ 66-941C 	⑥ 67-012A 	⑦ 67-014A 	⑧ 67-019 	⑨ 67-031B 
⑩ 67-051E 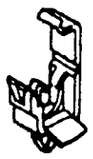 (UB42-67-051)	⑪ 67-051E  (W029-67-051A)	⑫ 67-052J 	⑬ 67-072A  (FC01-67-072A)	⑭ 67-073 
⑮ 67-073B 	⑯ 67-254  (FC04-51-674)	⑰ 67-254  (S113-67-254A)	⑱ 67-293 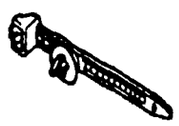	⑲ 67-072A  (HE20-67-072)
⑳ 14-726 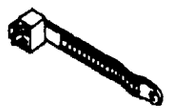				

6704 -2 * WIRING HARNESS CLAMPS

PART NO.	QTY	MODEL/RESTRICTION	MODEL/RESTRICTION	MODEL/RESTRICTION	FROM-TO
67-072A		CLIP			
FC01-67-072A	1				
HE20-67-072	1				
67-073		CLIP			
FB01-67-073A	2				
67-073B		CLIP			
H261-67-073	1	(W/O TURBO)			
67-254		CLIP,CABLE			
FC04-51-674	2				
S113-67-254A	1				
67-293		CLIP,CABLE			
S083-67-253	1				

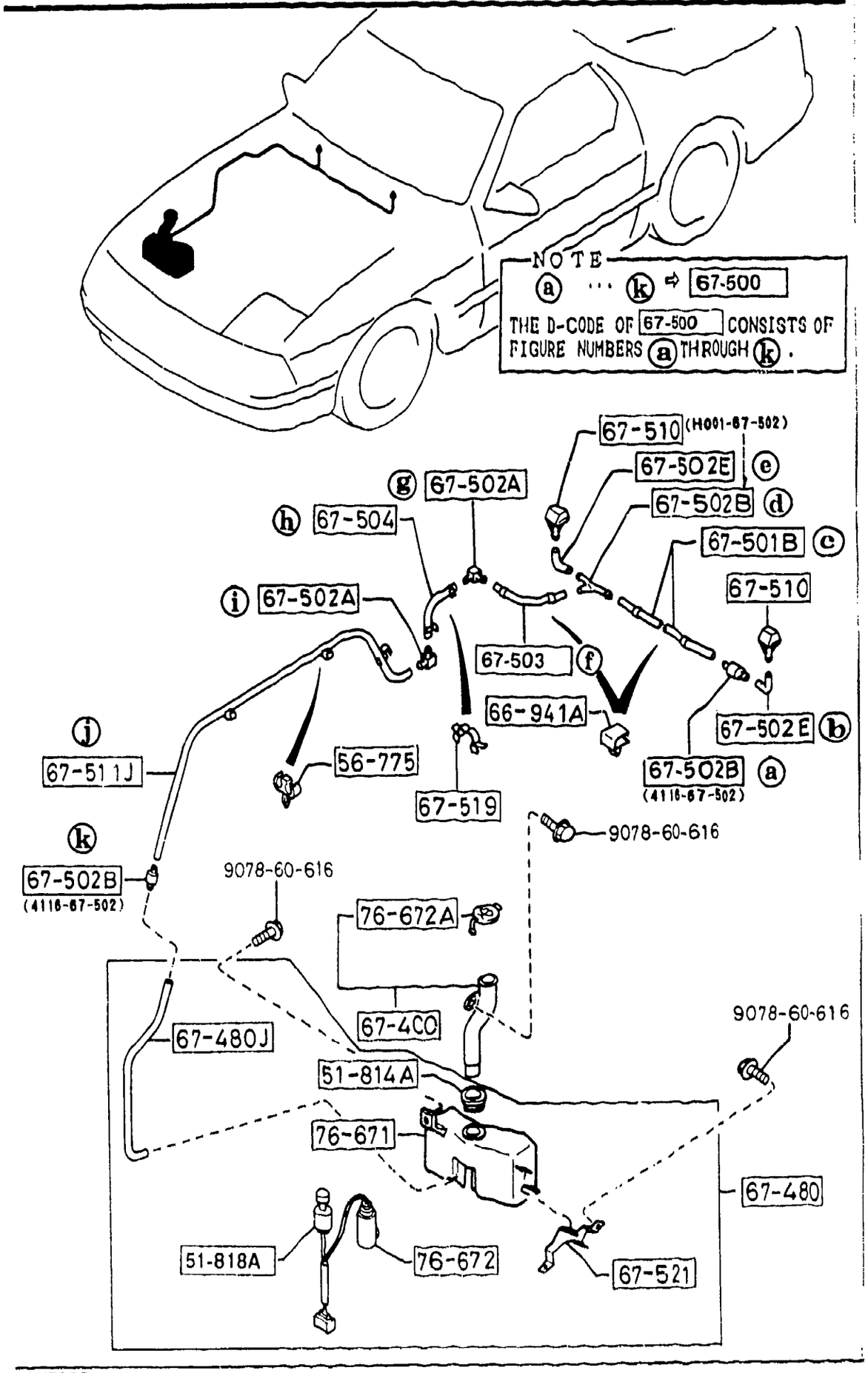

AUFA03

PART NO.	QTY	MODEL/RESTRICTION	MODEL/RESTRICTION	MODEL/RESTRICTION	FROM-TO
51-814A		GROMMET,WASHER TANK			
FB01-51-816	1				
51-818A		SWITCH,LEVEL-WASHER TANK			
FB01-67-488A	1				
56-775		CLIP,WIRE-BONNET			
H260-67-519A	3				
66-941A		CLIP			
GB08-66-941	6				
67-4C0		PIPE,FILLER-F.WASHER TANK			
FB01-67-4C0B	1				
67-480		TANK,WASHER-FRONT			
FB01-67-4T0D	1	('91 MODEL)			
FB01-67-4T0E	1	('92 MODEL)			
67-480J		PIPE,VINYL			
FB04-67-503A	1				
67-500		PIPE			
FB01-67-500C	1				
67-501B		HOSE'A',WASHER			
FB01-67-501C	1				
67-502A		JOINT,HOSE			
H261-67-502	2				
67-502B		JOINT,HOSE			
H001-67-502	1				
4116-67-502	2				
67-502E		JOINT,ELBOW-W.TANK			
S084-67-502	2				
67-503		HOSE'B',WASHER			
FB01-67-503B	1				

CAT. AUFA03-07

1993-12

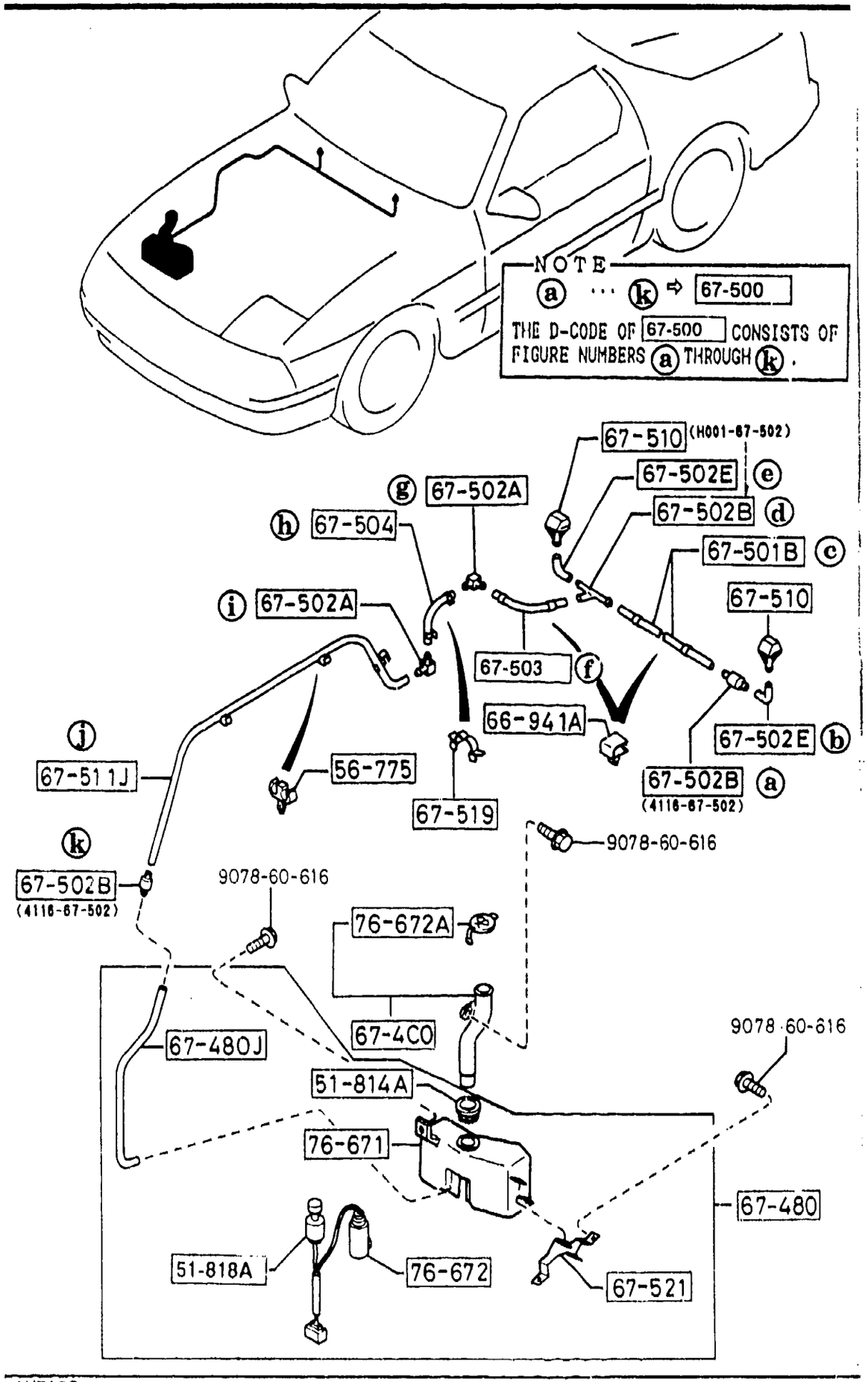

PART NO.	QTY	MODEL/RESTRICTION	MODEL/RESTRICTION	MODEL/RESTRICTION	FROM-TO
67-504		HOSE'C',WASHER			
FB01-67-504A	1				
67-510		NOZZLE,WASHER-F.WIND			
FB01-67-510	2				
67-511J		PIPE,SCREEN WASHER			
FB02-67-503A	1				
67-519		CLIP,PIPE			
FB01-67-519A	3				
67-521		BRACKET,WASHER TANK			
FB04-67-485	1				
76-671		TANK,WASHER			
FB01-67-481	1				
76-672		PUMP,WASHER			
FB01-67-482B	1				
76-672A		CAP,TANK			
FB01-67-483	1				

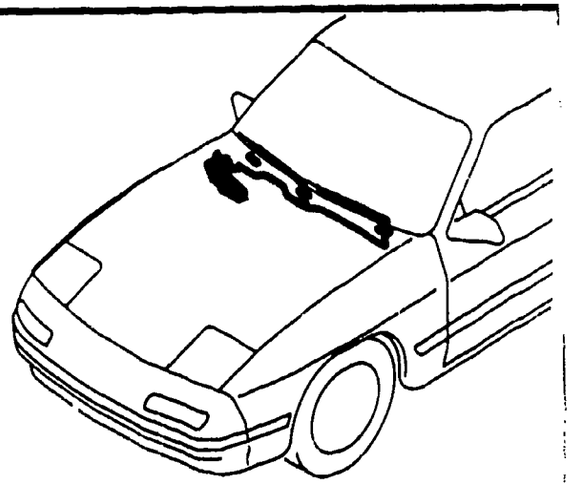

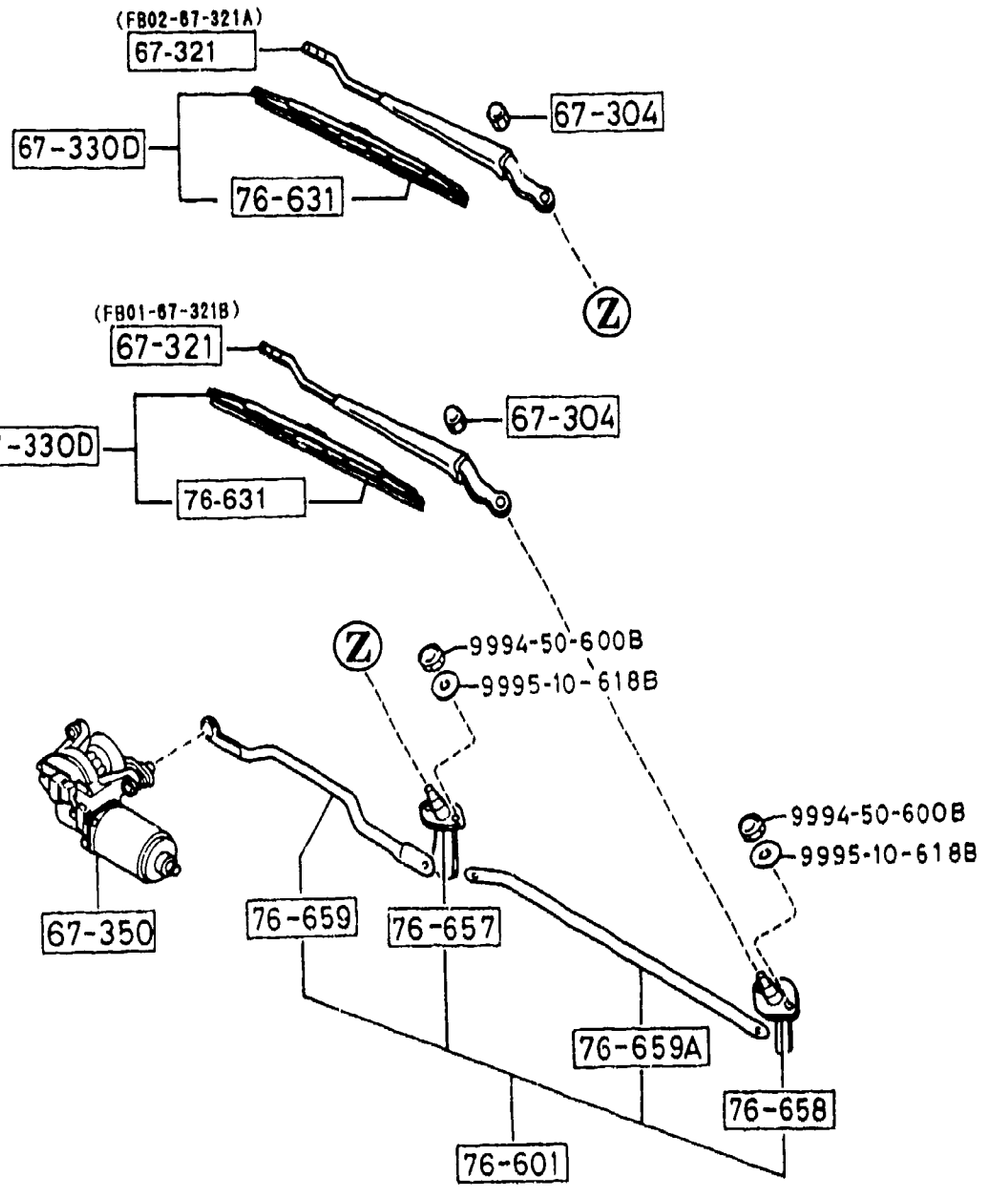

PART NO.	QTY	MODEL/RESTRICTION	MODEL/RESTRICTION	MODEL/RESTRICTION	FROM-TO
67-304		NUT,WIPER ARM-FRONT			
FB01-67-304	2				
67-321		ARM,WIPER			
FB01-67-321B	1				
FB02-67-321A	1				
67-330D		BLADE(L),WIPER-FRONT			
HE76-67-330A	2				
67-350		MOTOR,WIPER			
FB06-67-350	1				
76-601		LINK,WIPER			
FB01-67-360C	1				
76-631		RUBBER,BLADE-FRONT			
HE76-67-331A	2				
76-657		SHAFT,DRIVE NO.1			
FB01-67-363	1				
76-658		SHAFT,DRIVE NO.2			
FB01-67-364	1				
76-659		ARM NO.1,LINK			
FB01-67-361	1				
76-659A		ARM NO.2,LINK			
FB01-67-362	1				

6740 WIPER MOTOR COMPONENTS(FRONT)

COMPONENTS OF FB06-67-350

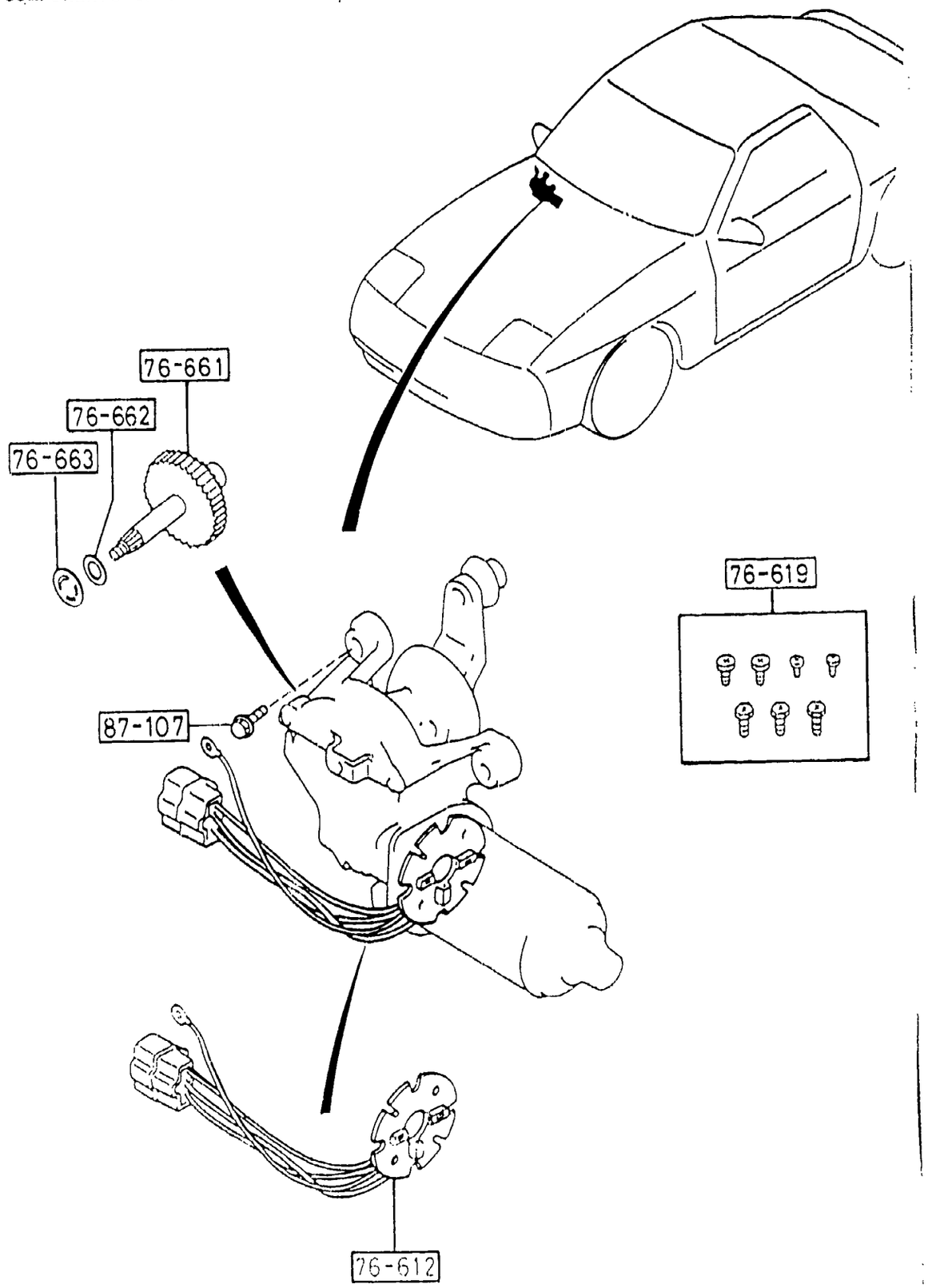

PART NO.	QTY	MODEL/RESTRICTION	MODEL/RESTRICTION	MODEL/RESTRICTION	FROM-TO
76-612		PLATE,HOLDER-BRUSH			
FB05-67-351	1				
76-619		PARTS SET			
H043-76-619A	1				
76-661		GEAR,SHAFT			
GJ83-67-354	1				
76-662		WASHER			
B094-76-662	1				
76-663		WASHER,TOOTHED			
B094-76-663	1				
87-107		SCREW			
B092-76-623	1				

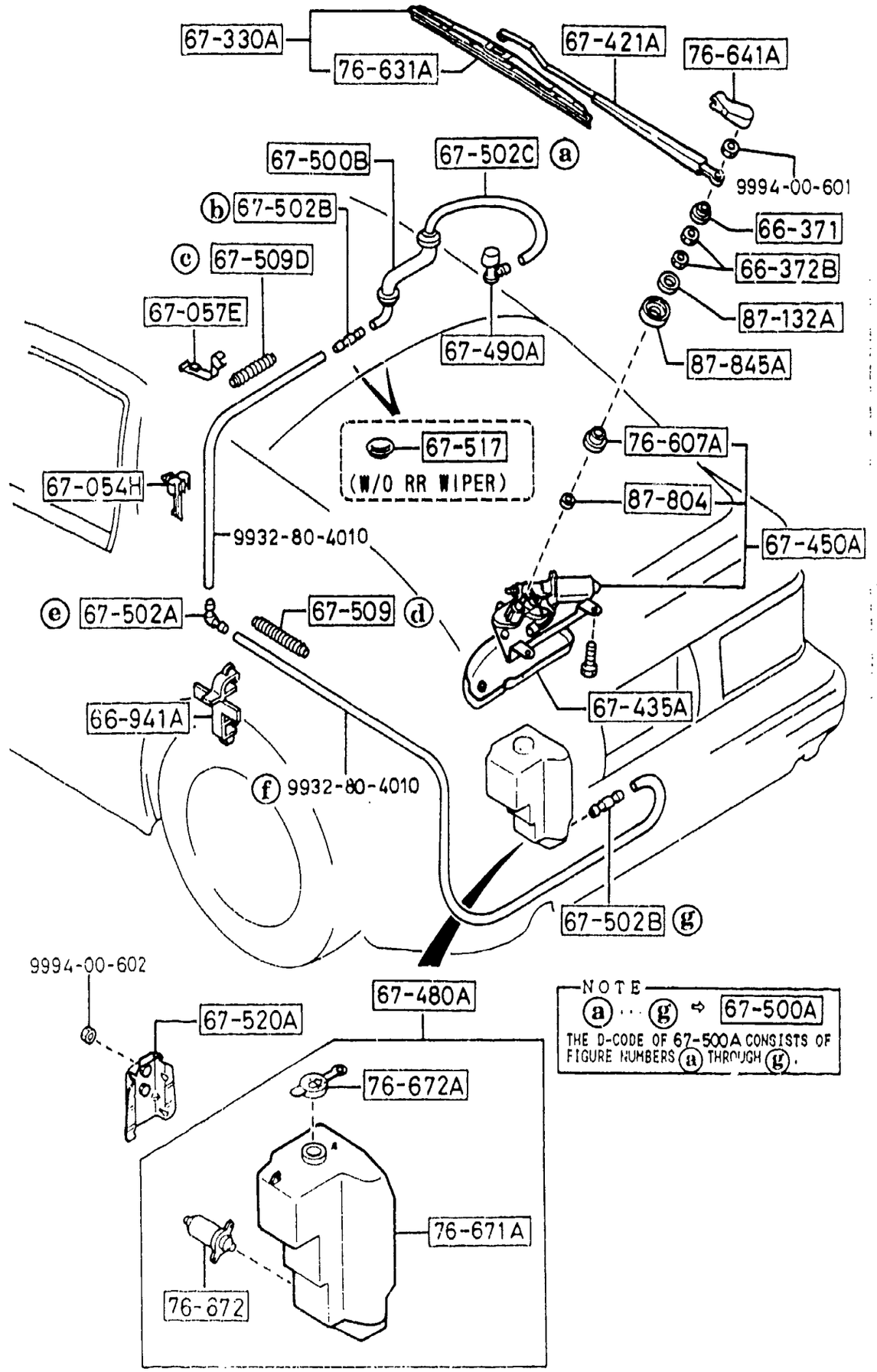

AUFA03

6750 -1 WINDOW WIPER & WASHER (REAR)

PART NO.	QTY	MODEL/RESTRICTION	MODEL/RESTRICTION	MODEL/RESTRICTION	FROM-TO
66-371 FB02-67-366A	1	CAP,SEAL			
66-372B D001-76-605 (D001-76-605A)	2	NUT			-1301
D001-76-605A	2				1301-
66-941A GB08-66-941	1	CLIP			
67-054H FB02-67-056	3	CLIP,OPENER CABLE			
67-057E FB02-67-057	2	CLIP'B',PIPE-REAR WASHER			
67-330A FB02-67-330	1	BLADE,WIPER-REAR			
67-421A FC01-67-421	1	ARM,WIPER			
67-435A FB02-67-458B	1	COVER,WIPER MOTOR			
67-450A FB02-67-450A	1	MOTOR			
67-480A FB02-67-480A	1	TANK,WASHER-REAR			
67-490A FB02-67-510	1	NOZZLE,WASHER-R.WIND			
67-500A FB02-67-500	1	PIPE,REAR WASHER-LOWER			
67-500B FB04-67-500B	1	PIPE,REAR WASHER-UPPER			

1301 FC3***-906890

6750 WINDOW WIPER & WASHER (REAR)

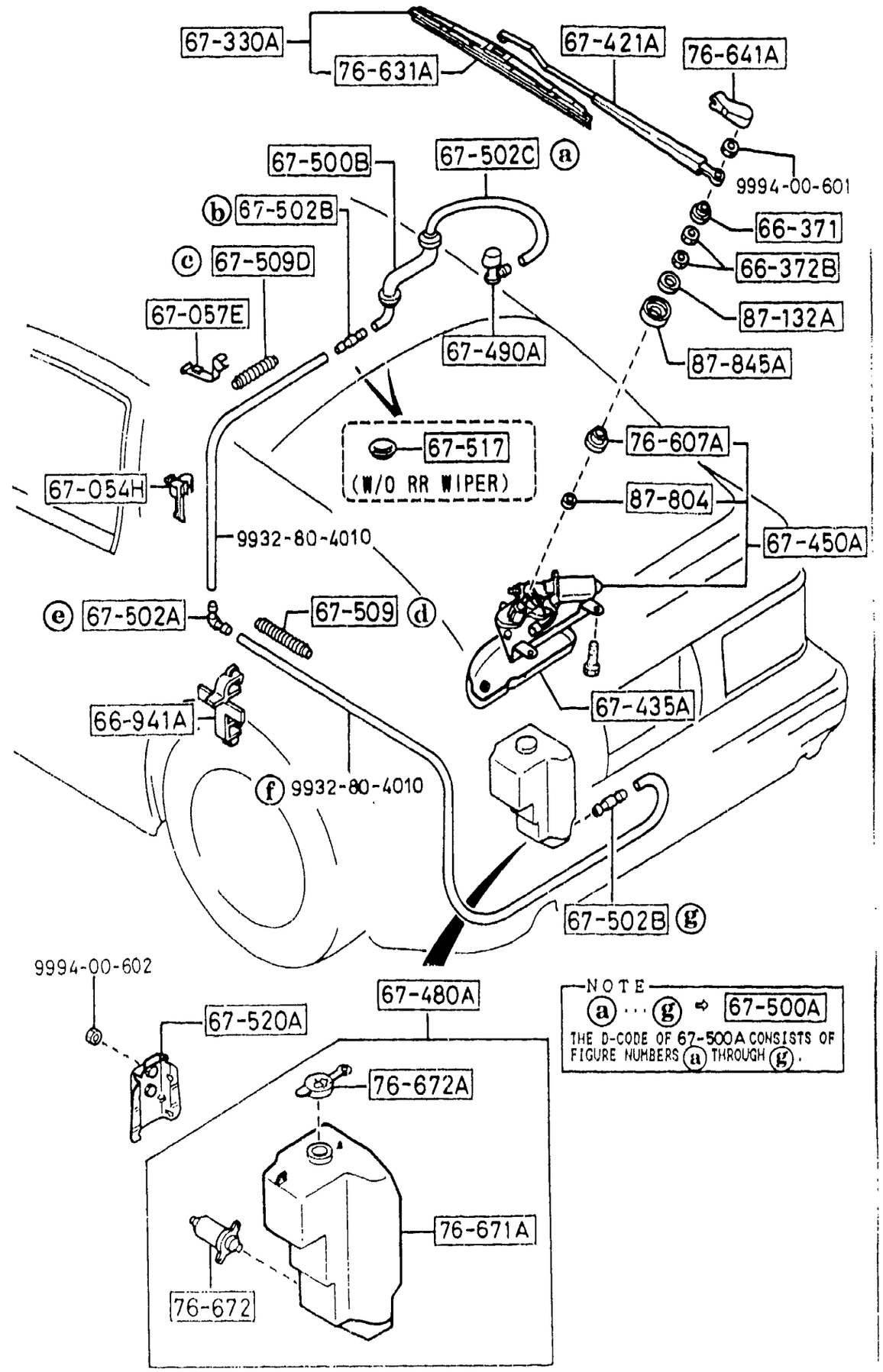

NOTE
ⓐ ··· ⓖ ⇨ 67-500A
THE D-CODE OF 67-500A CONSISTS OF FIGURE NUMBERS ⓐ THROUGH ⓖ.

PART NO.	QTY	MODEL/RESTRICTION	MODEL/RESTRICTION	MODEL/RESTRICTION	FROM TO
67-502A S013-67-502	1	JOINT,HOSE			
67-502B 4116-67-502	2	JOINT,HOSE			
67-502C SA70-67-502	1	JOINT,ELBOW			
67-509 G044-67-509	1	TUBE,CORRUGATE			
67-509D G033-67-509	1	TUBE,CORRUGATE			
67-517 FB01-67-517	2	COVER,HOLE-H/FRAME&FEADER (W/O RR WIPER)			
67-520A FB02-67-520A	1	BRACKET			
76-607A FB02-67-402A	2	BUSH,INNER			
76-631A FB02-67-331	1	RUBBER,BLADE-REAR			
76-641A B093-76-641	1	COVER,WIPER ARM-REAR			
76-671A FB02-67-481	1	TANK,WASHER-RR WIPER			
76-672 8532-76-672	1	PUMP,WASHER			
76-672A G030-76-673A	1	CAP,TANK			
87-132A FB02-67-406	1	WASHER			

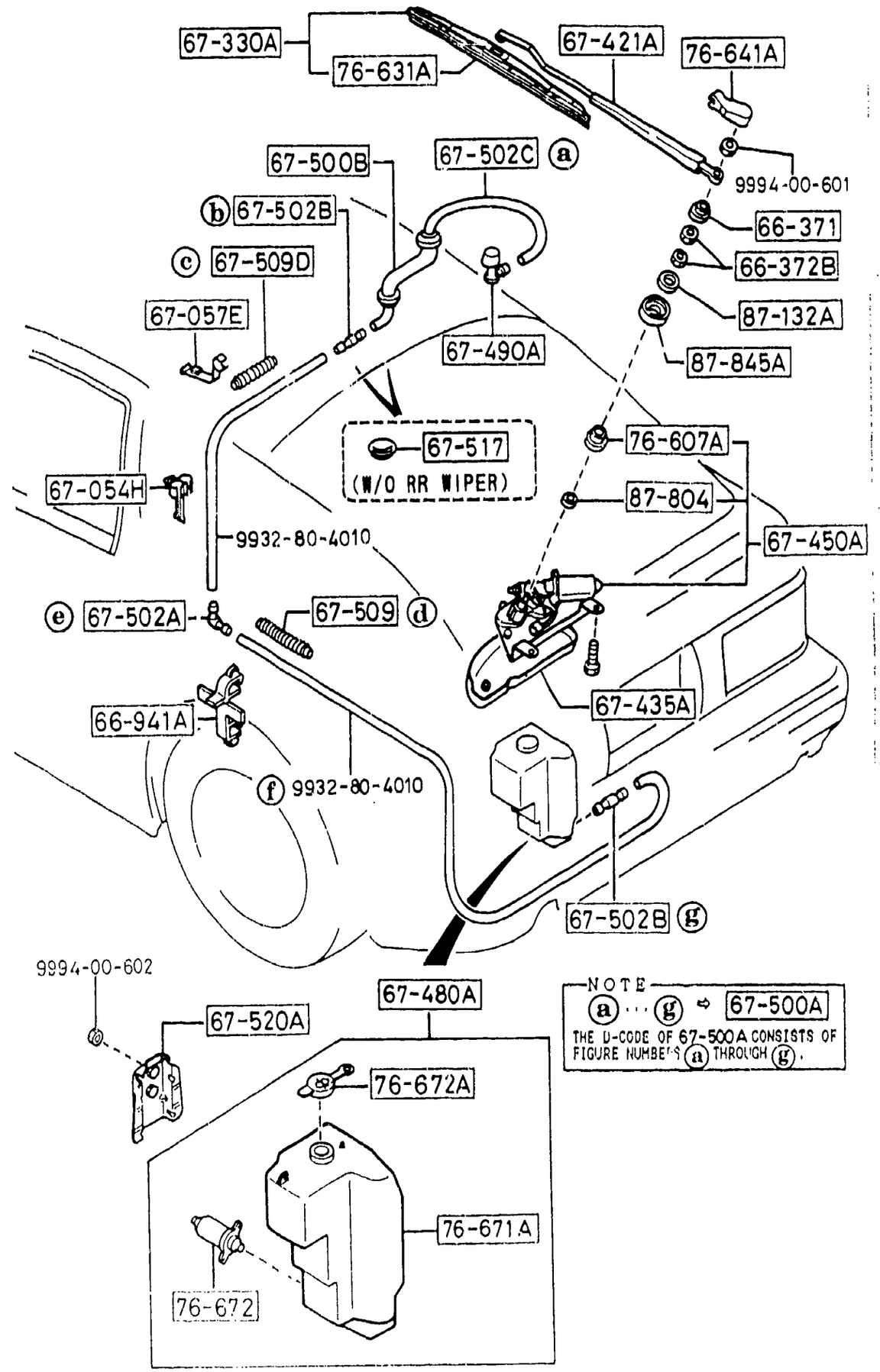

NOTE
ⓐ ··· ⓖ ⇨ 67-500A
THE D-CODE OF 67-500A CONSISTS OF FIGURE NUMBERS ⓐ THROUGH ⓖ.

PART NO.	QTY	MODEL/RESTRICTION	MODEL/RESTRICTION	MODEL/RESTRICTION	FROM-TO
87-804		WASHER			
FB03-67-406	1				
87-845A		GASKET			
FB02-67-408A	1				

6760 WINDOW WIPER MOTOR COMPONENTS (REAR)

COMPONENTS OF FB02-67-450A

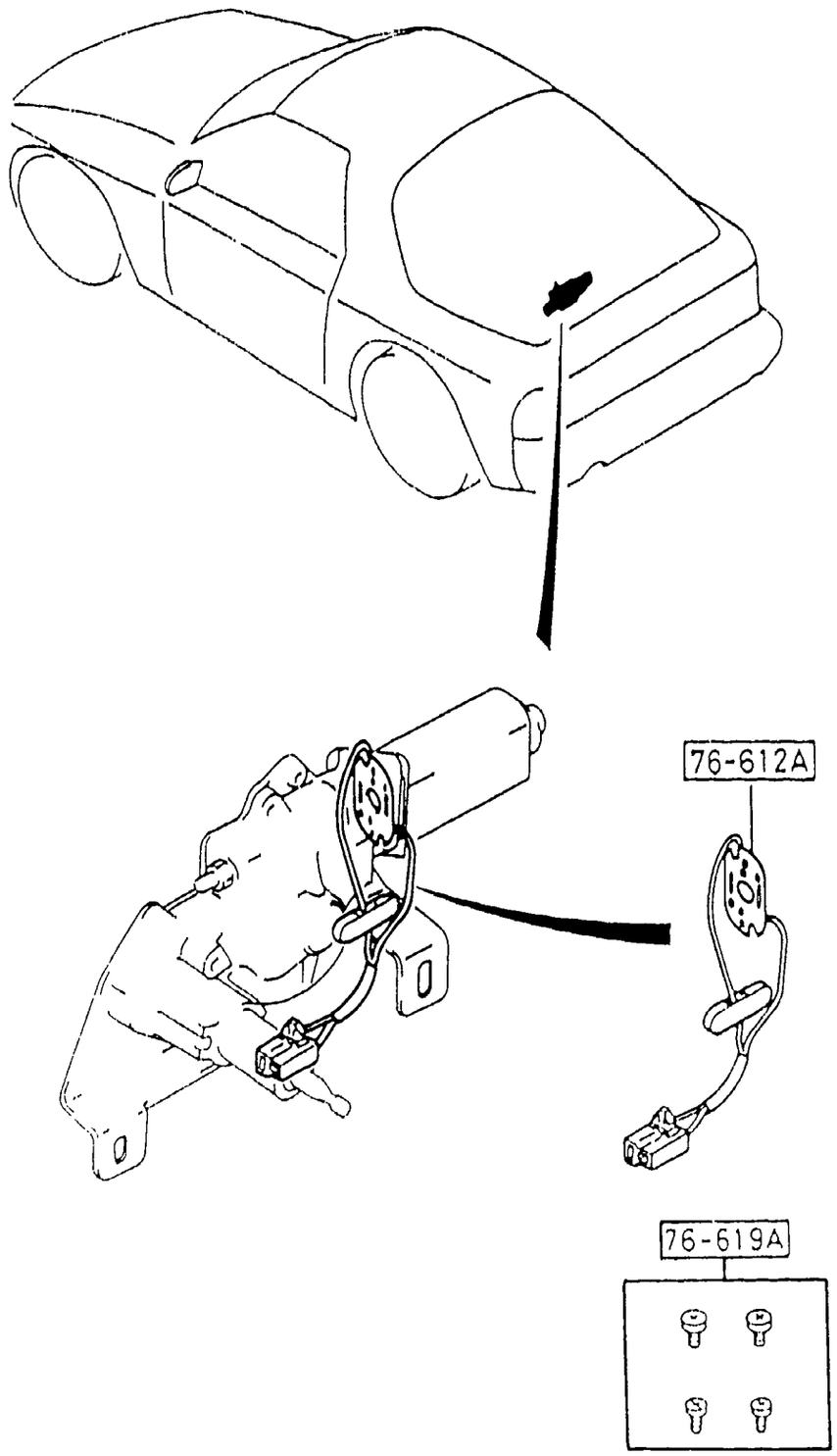

PART NO.	QTY	MODEL/RESTRICTION	MODEL/RESTRICTION	MODEL/RESTRICTION	FROM-TO
76-612A		PLATE,HOLDER-BRUSH			
FB02-67-451	1				
76-619A		PARTS SET			
B002-76-619A	1				

(SUNROOF)

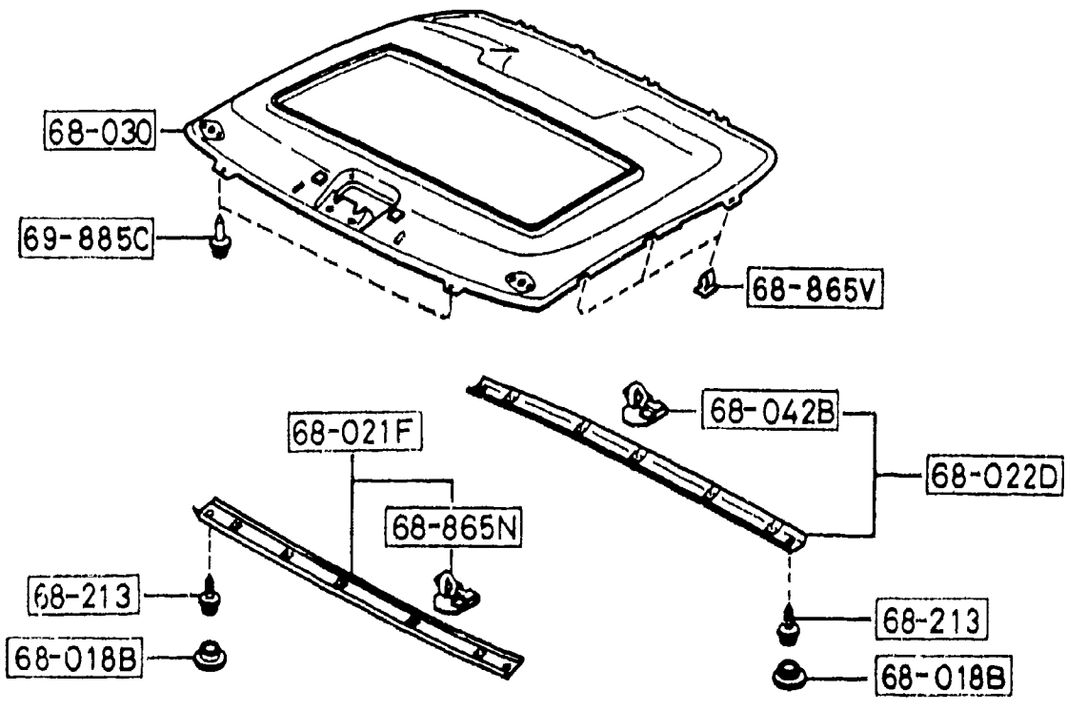

(W/O SUN-RF)

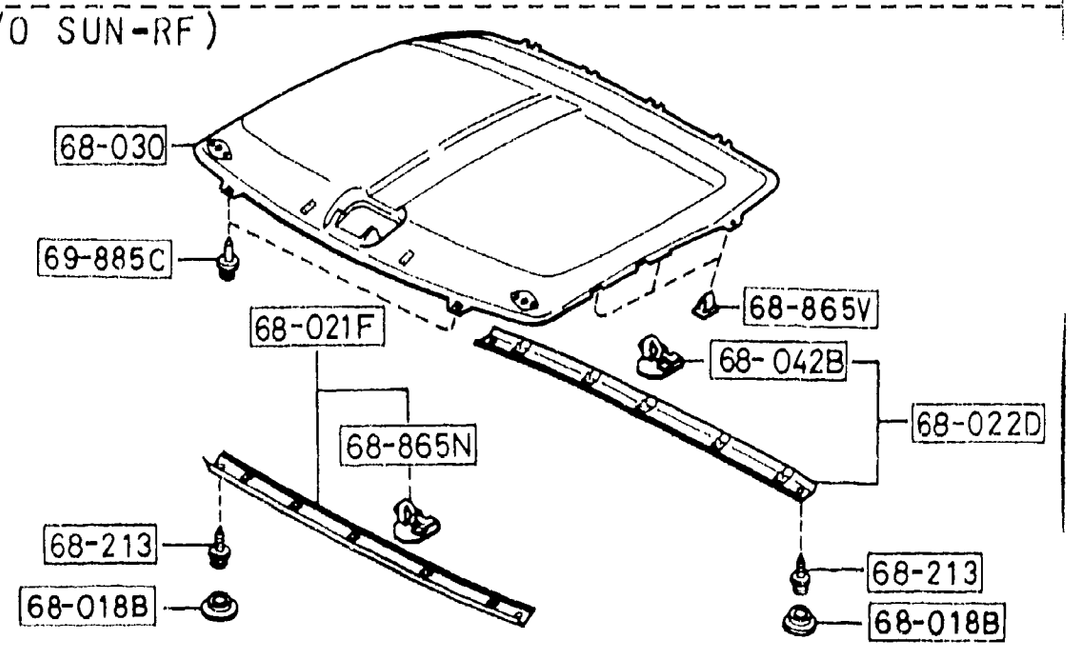

PART NO.	QTY	MODEL/RESTRICTION	MODEL/RESTRICTION	MODEL/RESTRICTION	FROM-TO
68-018B		CAP			
FB01-68-151	4				
02	INT-	FD8 FE1 BLACK			
48	INT-	FD9 BLUE			
68-021F		GARNISH,TOP-FRONT			
FB01-68-020	1				
02	INT-	FD8 FE1 BLACK			
48	INT-	FD9 BLUE			
68-022D		GARNISH,TOP-REAR			
FB01-68-040	1				
02	INT-	FD8 FE1 BLACK			
48	INT-	FD9 BLUE			
68-030		CEILING,TOP			
FC01-68-030	1	(W/O SUN-RF)			
02	INT-	FD8 BLACK			
48	INT-	FD9 BLUE			
FC03-68-030	1	((SUNROOF))(W/RR WIPER))			
02	INT-	FD8 BLACK			
48	INT-	FD9 BLUE			
FC04-68-030	1	((SUNROOF))(W/O RR WIPER))			
02	INT-	FD8 BLACK			
48	INT-	FD9 BLUE			
68-042B		CLIP,GARNISH			
FB01-66-042	5				
68-213		SCREW,TAPPING			
G030-68-213B	4				
68-865N		CLIP,TRIM			
H002-68-865	5				
68-865V		FASTENER,TOP CEILING			
B102-68-012	6				

(SUNROOF)

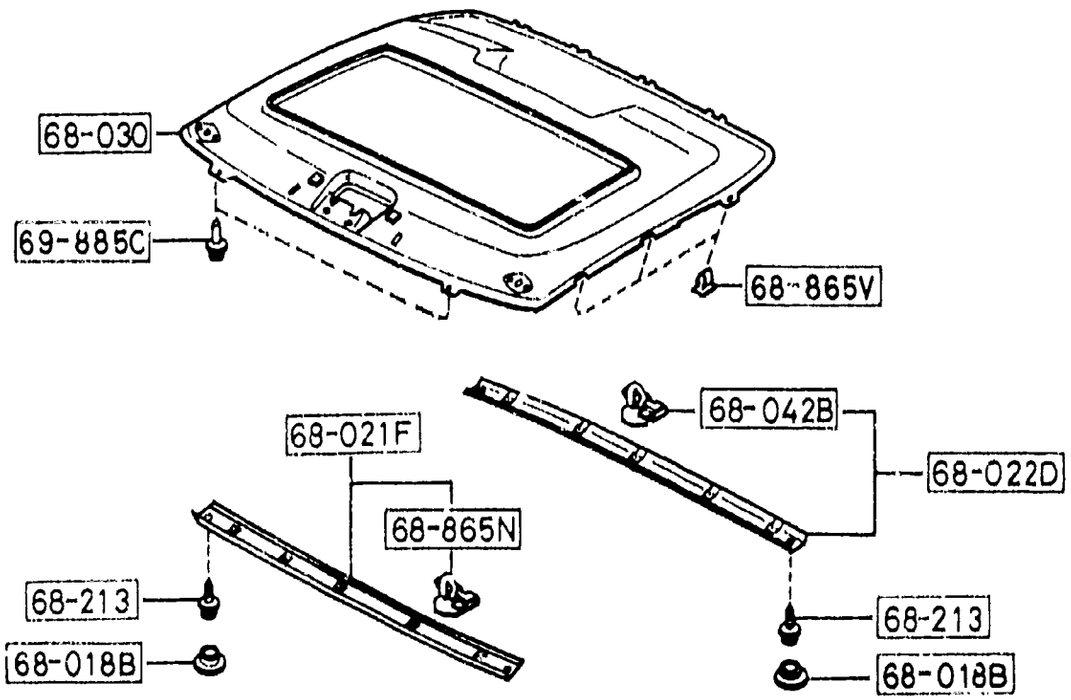

(W/O SUN-RF)

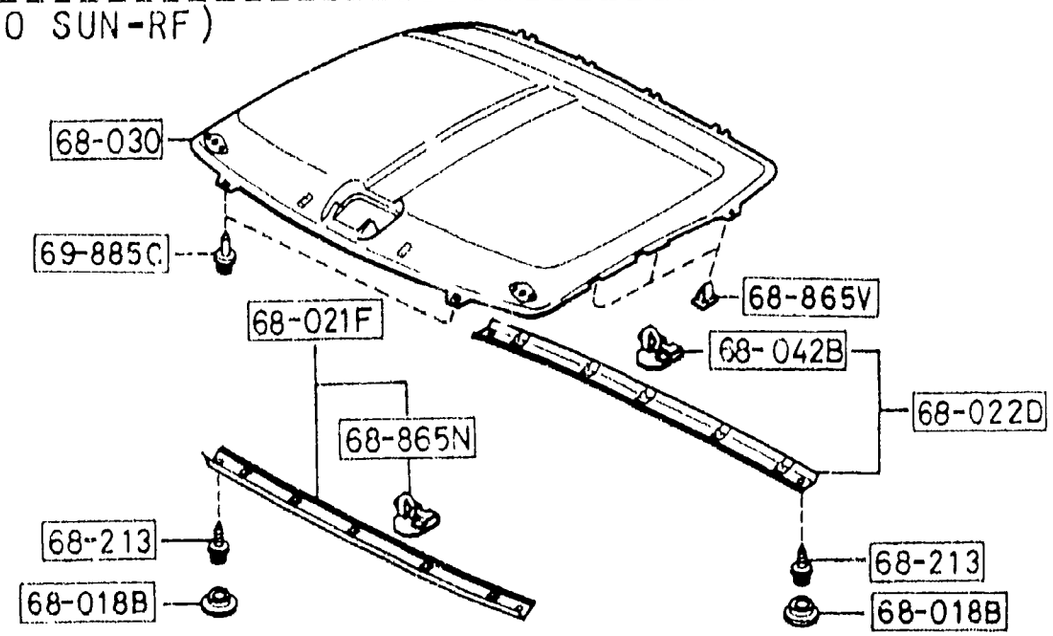

6800 -2 * CEILING TRIMS
(COUPE)

PART NO.	QTY	MODEL/RESTRICTION	MODEL/RESTRICTION	MODEL/RESTRICTION	FROM-TO
69-885C		FASTENER			
UB54-68-885	2				
00 INT-		FD8 FD9 FE0 FE1 BLACK			

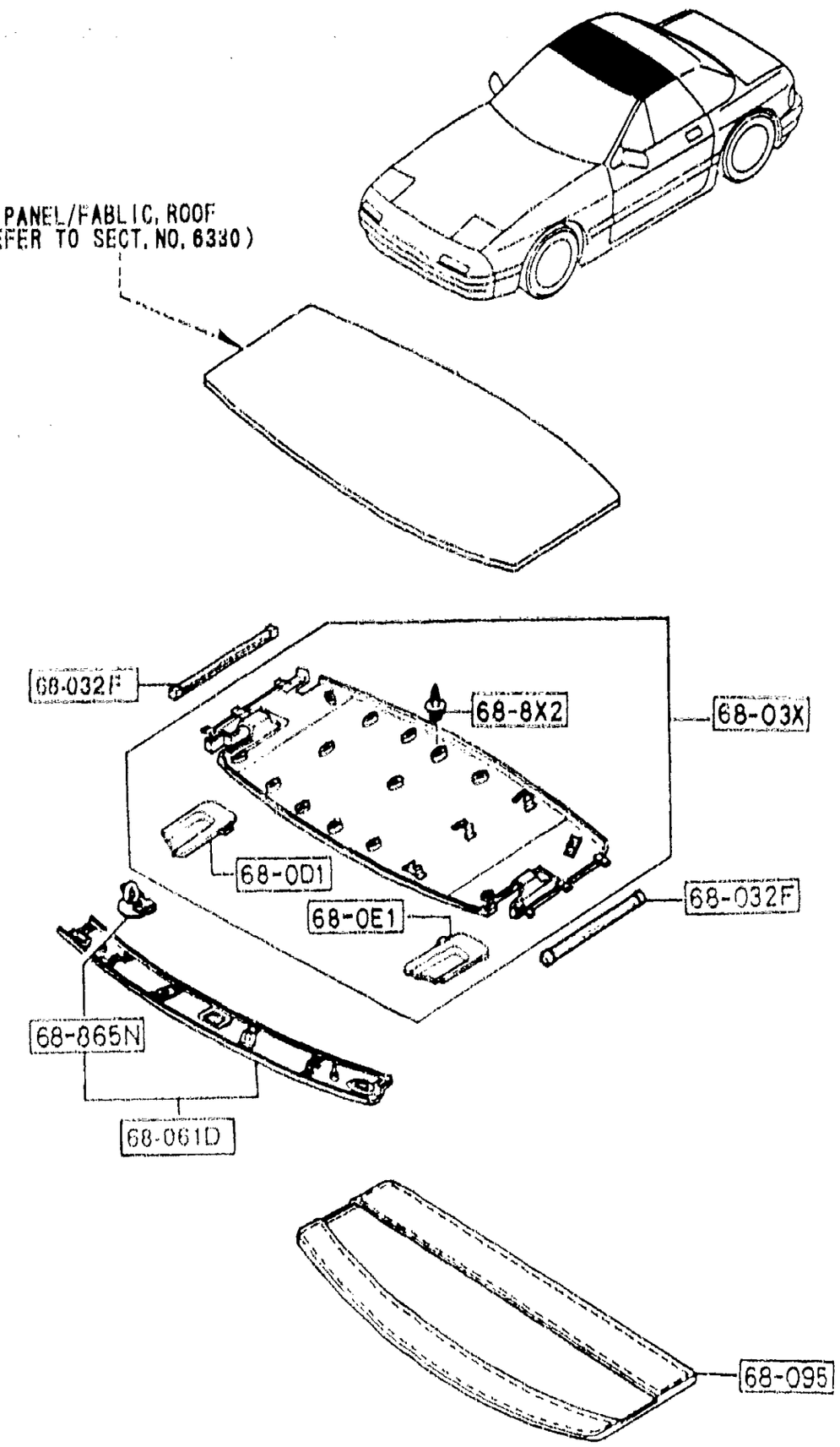

PART NO.	QTY	MODEL/RESTRICTION	MODEL/RESTRICTION	MODEL/RESTRICTION	FROM-TO
68-0D1		LID(R),TOP TRIM			
FB67-68-0D1	1				
02	INT-	FD8 FE1 BLACK			
48	INT-	FD9 BLUE			
68-0E1		LID(L),TOP TRIM			
FB67-68-0E1	1				
02	INT-	FD8 FE1 BLACK			
48	INT-	FD9 BLUE			
68-03X		TRIM,TOP			
FB67-68-03XB	1				
02	INT-	FD8 FE1 BLACK			
48	INT-	FD9 BLUE			
68-032F		WELT,SEAMING-ROOF			
FB67-68-032	2				
02	INT-	FD8 FE1 BLACK			
48	INT-	FD9 BLUE			
68-061D		TRIM,FRONT HEADER			
FB67-68-020A	1				
02	INT-	FD8 FE1 BLACK			
48	INT-	FD9 BLUE			
68-095		BAG,ROOF PANEL			
FB67-68-095A	1				
68-8X2		CLIP			
0225-68-8X2	10				
68-865N		CLIP,TRIM			
H002-68-865	2				

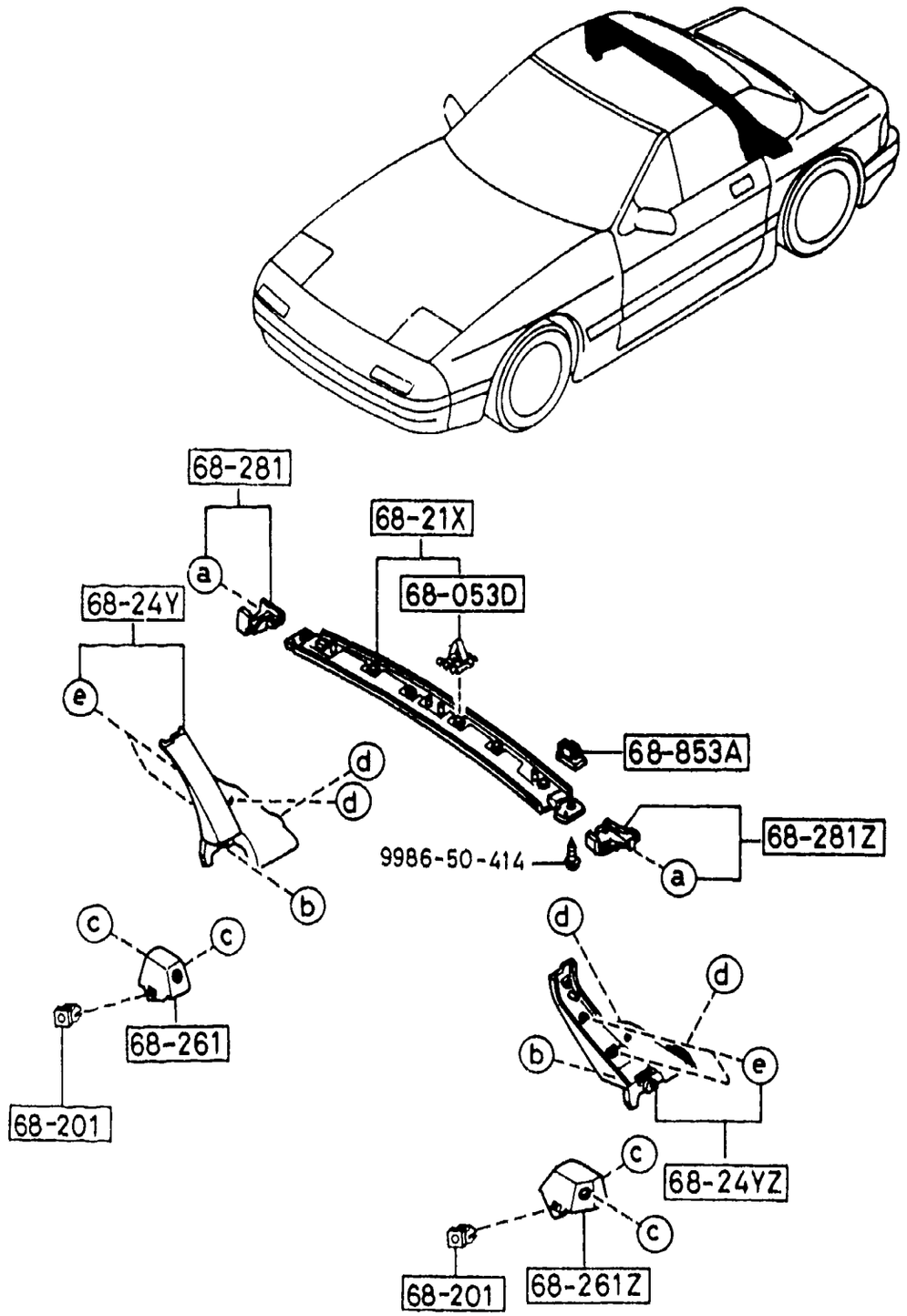

a	b	c	d	e
68-285	68-675	68-865E	68-865Q	68-865S
				

PART NO.	QTY	MODEL/RESTRICTION	MODEL/RESTRICTION	MODEL/RESTRICTION	FROM-TO
68-053D		CLIP,RR. PILLAR TRIM			
B100-68-279	8				
68-201		GROMMET,SCREW-QTR TRIM			
FB67-68-201	2				
68-21X		TRIM,FORMING BAR			
FB67-68-21XC	1				
02	INT-	FD8 FE1 BLACK			
48	INT-	FD9 BLUE			
68-24Y		COVER(R),LINK			
FB67-68-24YA	1				
02	INT-	FD8 FE1 BLACK			
48	INT-	FD9 BLUE			
68-24YZ		COVER(L),LINK			
FB67-68-25YA	1				
02	INT-	FD8 FE1 BLACK			
48	INT-	FD9 BLUE			
68-261		COVER(R),BELT			
FB67-68-261B	1				
02	INT-	FD8 FE1 BLACK			
48	INT-	FD9 BLUE			
68-261Z		COVER(L),BELT			
FB67-68-271B	1				
02	INT-	FD8 FE1 BLACK			
48	INT-	FD9 BLUE			
68-281		COVER(R),HINGE			
FB67-68-28XB	1				
02	INT-	FD8 FE1 BLACK			
48	INT-	FD9 BLUE			
68-281Z		COVER(L),HINGE			
FB67-68-29XB	1				

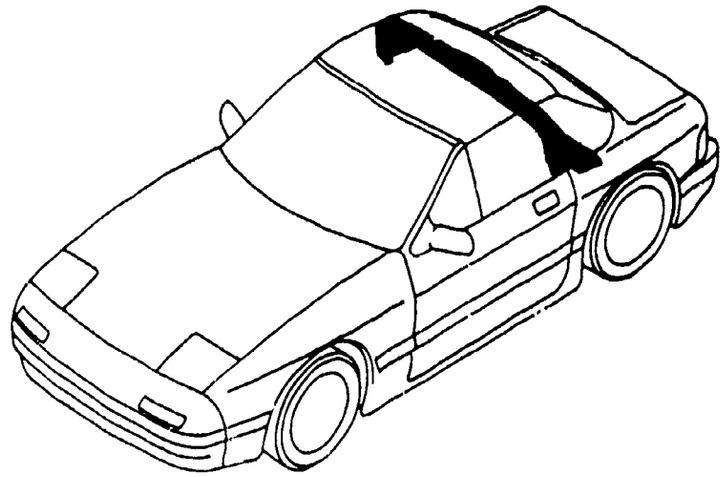

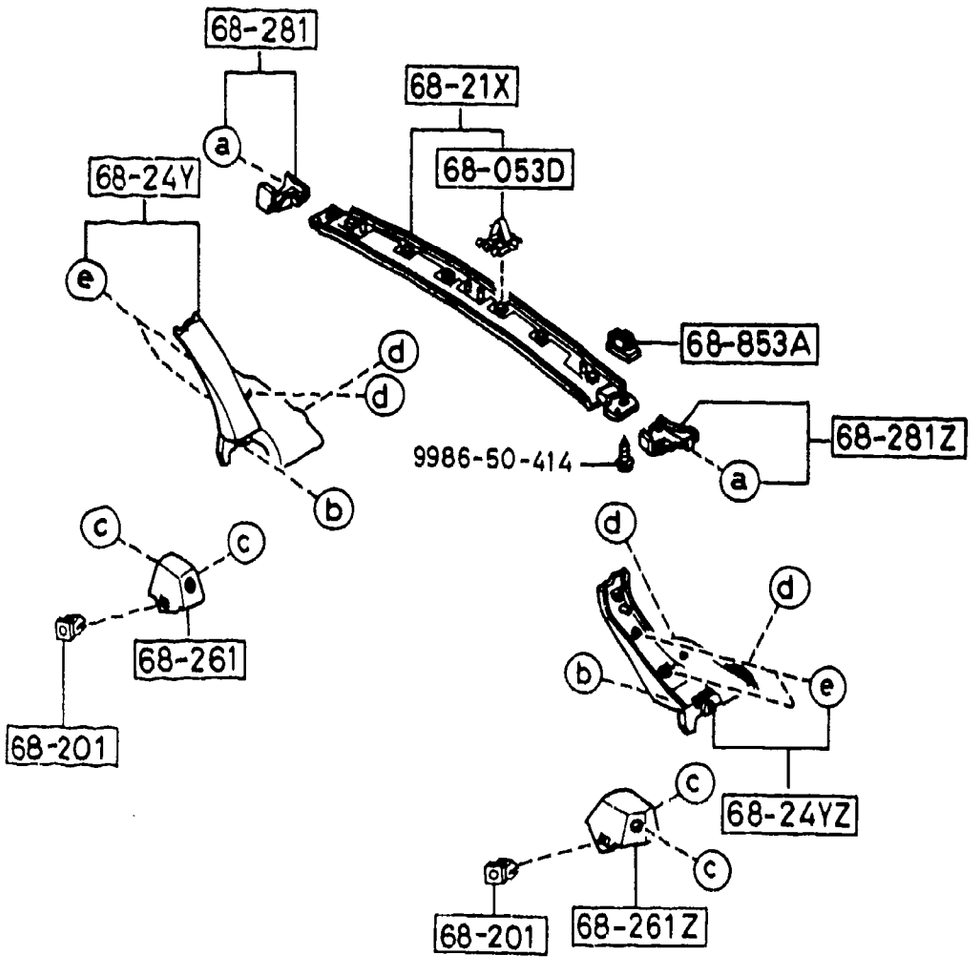

a	b	c	d	e
68-285	68-675	68-865E	68-865Q	68-865S
				

PART NO.	QTY	MODEL/RESTRICTION	MODEL/RESTRICTION	MODEL/RESTRICTION	FROM-TO
CONT'D					
02	INT-	FD8 FE1 BLACK			
48	INT-	FD9 BLUE			
+---------+					
| 68-285 |		FASTENER,HINGE COVER			
+---------+					
FB67-68-285	2				
02	INT-	FD8 FE1 BLACK			
48	INT-	FD9 BLUE			
+---------+					
| 68-675 |		FASTENER			
+---------+					
B100-68-675	2				
02	INT-	FD8 FE1 BLACK			
48	INT-	FD9 BLUE			
+---------+					
| 68-853A |		GROMMET,SCREW-T/SIDE TRIM			
+---------+					
FB02-68-853	2				
+---------+					
| 68-865E |		FASTENER			
+---------+					
S049-68-865	4				
00	INT-	FD8 FE1 FE0 BLACK			
48	INT-	FD9 BLUE			
+---------+					
| 68-865Q |		FASTENER			
+---------+					
GJ21-68-885B	4				
02	INT-	FD8 FE1 BLACK			
48	INT-	FD9 BLUE			
+---------+					
| 68-865S |		CLIP,TRIM			
+---------+					
*GJ12-68-865	4				

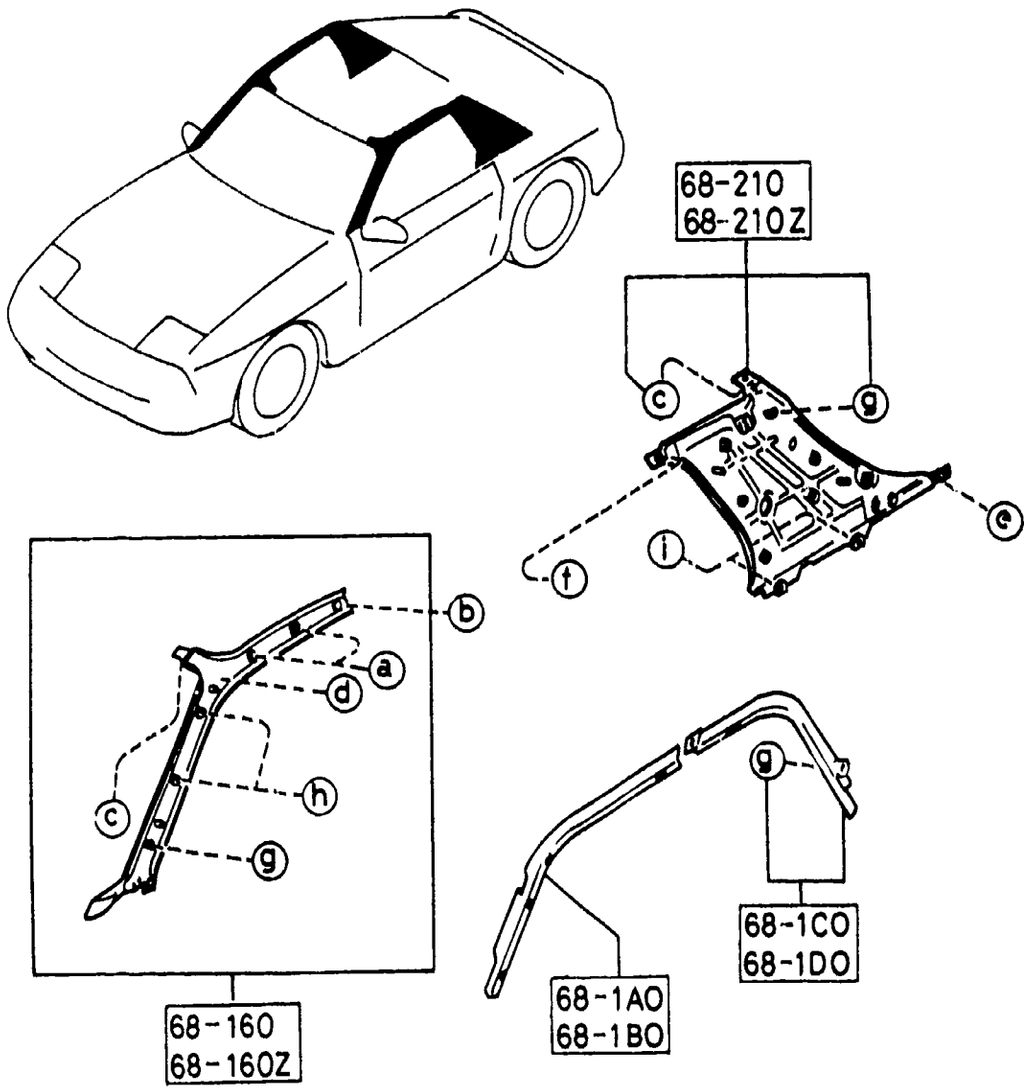

a	b		c	d	e
68-AD1	68-153A 68-018B		68-155	68-172H	68-719
f	g	h	i		
68-853A	68-865N	68-865S	69-885C		

AUFA03

6820 -1 PILLAR TRIMS
(COUPE)

PART NO.	QTY	MODEL/RESTRICTION	MODEL/RESTRICTION	MODEL/RESTRICTION	FROM-TO
68-AD1		CLIP,SLIDE			
FC01-68-AD1A	4				
68-018B		CAP			
FB01-68-151	2				
02	INT-	FD8 FE1 BLACK			
48	INT-	FD9 BLUE			
68-1A0		COVER(R),RAIL-FRT			
FC01-68-1A0B	1				
02	INT-	FD8 FE1 BLACK			
48	INT-	FD9 BLUE			
68-1B0		COVER(L),RAIL-FRT			
FC01-68-1B0B	1				
02	INT-	FD8 FE1 BLACK			
48	INT-	FD9 BLUE			
68-1C0		COVER(R),RAIL-RR			
FC01-68-1C0A	1				
02	INT-	FD8 FE1 BLACK			
48	INT-	FD9 BLUE			
68-1D0		COVER(L),RAIL-RR			
FC01-68-1D0A	1				
02	INT-	FD8 FE1 BLACK			
48	INT-	FD9 BLUE			
68-153A		SCREW,TAPPING			
UB39-68-153	2				
68-155		GROMMET,SCREW			
FB01-68-155	4				
68-160		TRIM(R),'A'PILLAR			
FC01-68-160C	1				
02	INT-	FD8 FE1 BLACK			
48	INT-	FD9 BLUE			

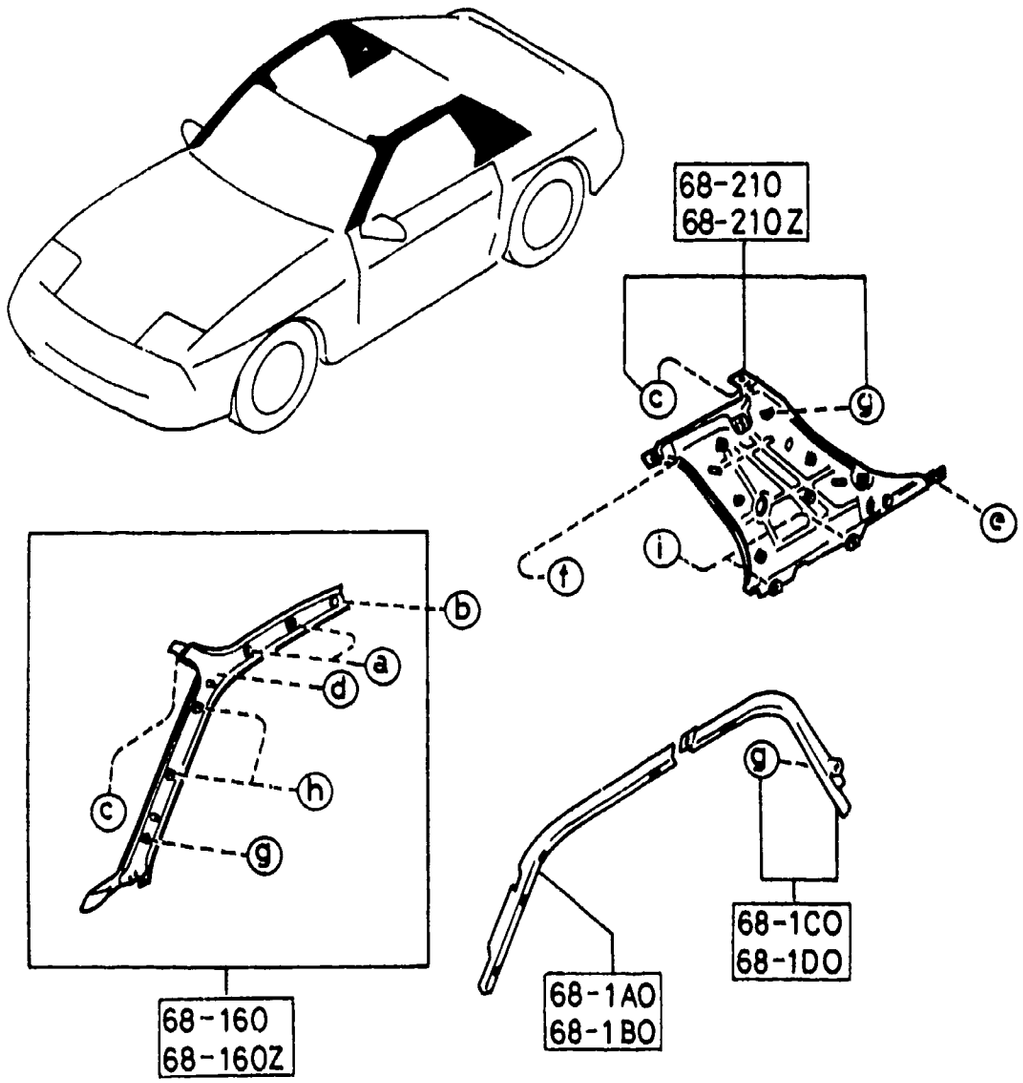

a	b		c	d	e
68-AD1	68-153A 68-018B		68-155	68-172H	68-719
f	g	h	i		
68-853A	68-865N	68-865S	69-885C		

PART NO.	QTY	MODEL/RESTRICTION	MODEL/RESTRICTION	MODEL/RESTRICTION	FROM-TO
68-160Z FC01-68-170C	1	TRIM(L),'A'PILLAR			
02	INT-	FD8 FE1 BLACK			
48	INT-	FD9 BLUE			
68-172H B100-68-215A	2	FASTENER,CTR.P/UPP.			
68-210 FC01-68-190A	1	TRIM(R),'B'PILLAR			
02	INT-	FD8 FE1 BLACK			
48	INT-	FD9 BLUE			
68-210Z FC01-68-210A	1	TRIM(L),'B'PILLAR			
02	INT-	FD8 FE1 BLACK			
48	INT-	FD9 BLUE			
68-719 H001-68-719B	2	GROMMET,SCREW			
68-853A FB01-68-853	2	GROMMET,SCREW-T/SIDE TRIM			
68-865N H002-68-865	18	CLIP,TRIM			
68-865S GJ12-68-865	4	CLIP,TRIM			
69-885C UB54-68-885	4	FASTENER			
00	INT-	FD8 FD9 FE1 FE0 BLACK			
48	INT-	FD9 BLUE			

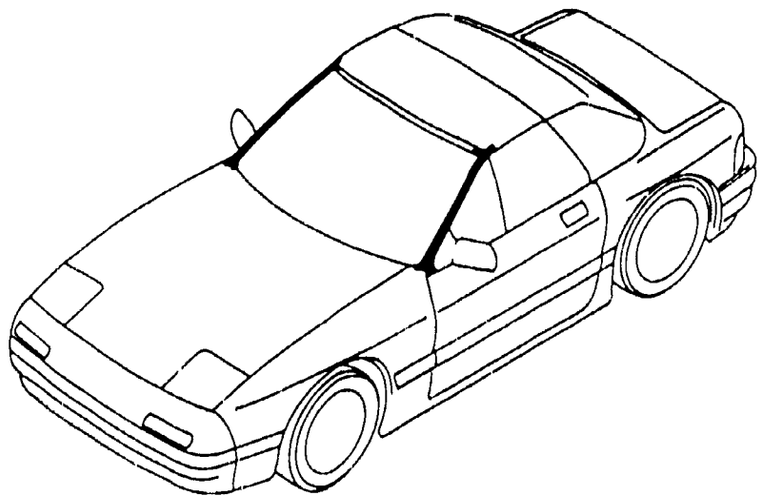

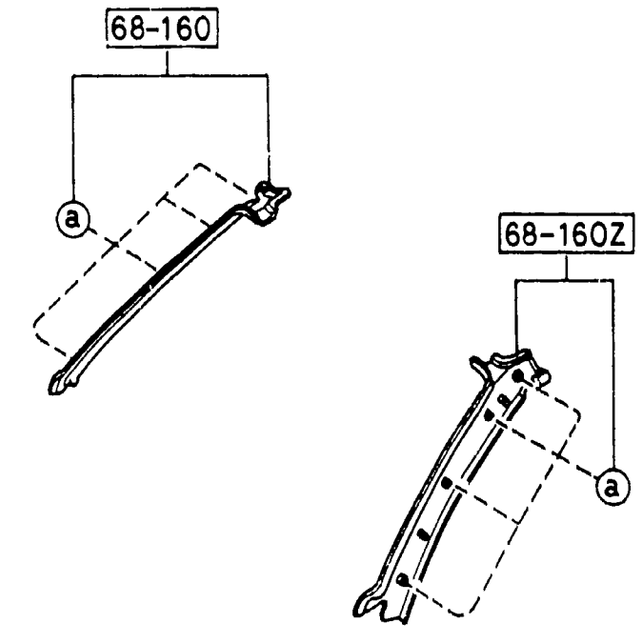

6820A -1 * PILLAR TRIMS
(CONVERTIBLE)

PART NO.	QTY	MODEL/RESTRICTION	MODEL/RESTRICTION	MODEL/RESTRICTION	FROM-TO
68-160		TRIM(R),'A'PILLAR			
FB67-68-160A	1				
02	INT-	FD8 FE1 BLACK			
48	INT-	FD9 BLUE			
68-160Z		TRIM(L),'A'PILLAR			
FB67-68-170A	1				
02	INT-	FD8 FE1 BLACK			
48	INT-	FD9 BLUE			
68-865N		CLIP,TRIM			
H002-68-865	8				

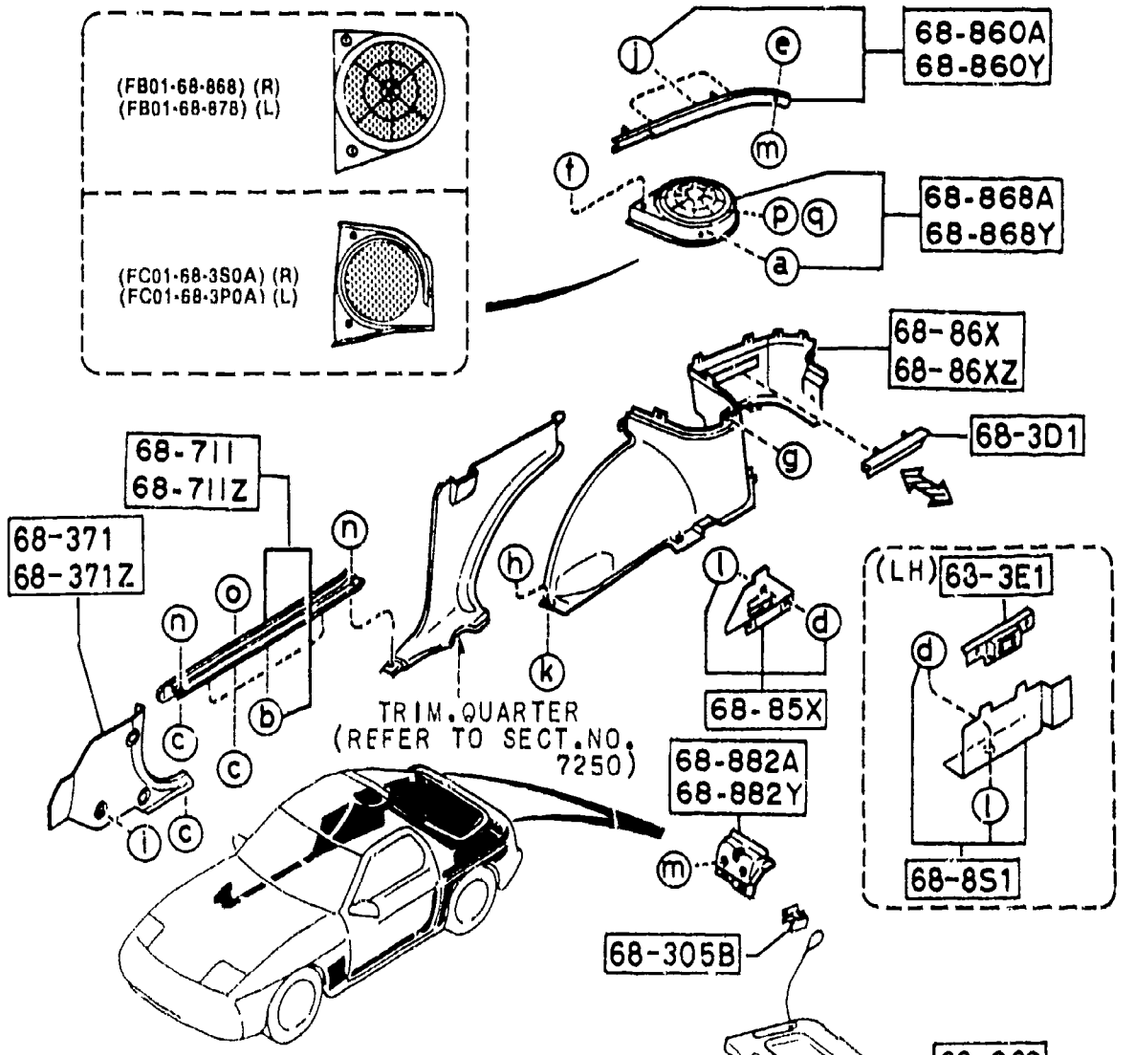

a	b	c
68-3E3 (W/RR PACKAGE TRAY TRIM)	68-712B	68-719

d	e	f	g	h	i	j
68-852	68-853A	68-865	68-865	68-865D	68-865E	68-865N
		(B040-68-865A)	(G032-68-865A)			

k	l	m	n	o	p	q
68-866C	9957-50-600	9986-40-416B	9986-40-430B	9976-90-416B	9986-50-416B	9991-00-401

AUFA03

6840 -1 TRIMS & SCUFF PLATES
(COUPE)

PART NO.	QTY	MODEL/RESTRICTION	MODEL/RESTRICTION	MODEL/RESTRICTION	FROM-TO
68-3D1		BRACKET(R),RR PKG			
FC01-68-3D1	1				
02	INT-	FD8 FD9 FE0 BLACK			
68-3E1		BRACKET(L),RR PKG			
FC01-68-3E1	1				
02	INT-	FD8 FD9 FE0 BLACK			
68-3E3		HOLDER,HINGE-GRILLE			
FC01-68-3E3A	2	BASE-OPT-2, TURBO, (W/RR PACKAGE TRAY TRIM)			
68-305B		HANGER,STRAP			
FC01-68-301A	2				
68-320		TRAY,REAR PACKAGE			
FC01-68-310D	1	BASE-OPT-2, TURBO, (W/RR PACKAGE TRAY TRIM)			
02	INT-	FD8 BLACK			
48	INT-	FD9 BLUE			
68-371		TRIM(R),FRONT SIDE			
FB01-68-370	1				
02	INT-	FD8 FE1 BLACK			
48	INT-	FD9 BLUE			
68-371Z		TRIM(L),FRONT SIDE			
FB01-68-390	1				
02	INT-	FD8 FE1 BLACK			
48	INT-	FD9 BLUE			
68-711		PLATE(R),FRONT SCUFF			
FB01-68-710A	1				
02	INT-	FD8 FE1 BLACK			
48	INT-	FD9 BLUE			
68-711Z		PLATE(L),FRONT SCUFF			
FB01-68-720A	1				

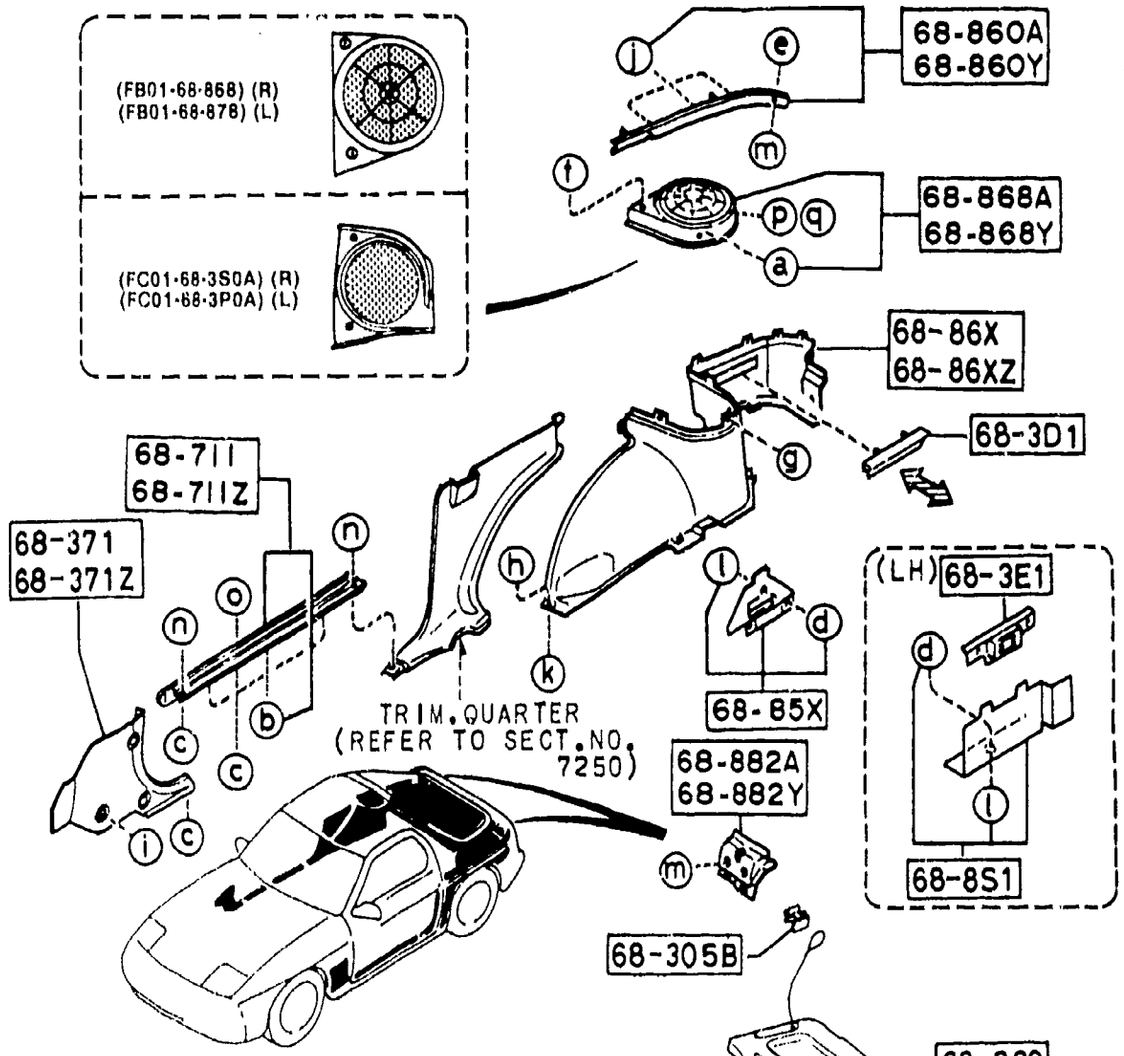

a	b	c
68-3E3 (W/RR PACKAGE TRAY TRIM)	68-712B	68-719

d	e	f	g	h	i	j
68-852	68-853A	68-865 (B040-68-865A)	68-865 (G032-68-865A)	68-865D	68-865E	68-865N

k	l	m	n	o	p	q
68-866C	9957-50-600	9986-40-416B	9986-40-430B	9976-90-416B	9986-50-416B	9991-00-401

PART NO.	QTY	MODEL/RESTRICTION	MODEL/RESTRICTION	MODEL/RESTRICTION	FROM-TO
CONT'D					
02	INT-	FD8 FE1 BLACK			
48	INT-	FD9 BLUE			
68-712B		CLIP			
B003-68-712	2				
68-719		GROMMET,SCREW			
H001-68-719B	8				
68-8S1		COVER,JACK			
FC01-68-8S0	1				
02	INT-	FD8 BLACK			
48	INT-	FD9 BLUE			
68-85X		LID,SIDE-TRUNK ROOM			
FB01-68-85X	1				
68-852		FASTENER,TURN-SIDE LID			
FB01-68-852	3				
68-853A		GROMMET,SCREW-T/SIDE TRIM			
FB02-68-853	2				
68-86X		TRIM(R),TRUNK SIDE-LOWER			
FC01-68-85Y	1	BASE, (W/O RR PACKAGE TRAY TRIM)			
02	INT-	FD8 BLACK			
48	INT-	FD9 BLUE			
FC04-68-85Y	1	BASE-OPT-2, TURBO, (W/RR PACKAGE TRAY TRIM)			
02	INT-	FD8 BLACK			
48	INT-	FD9 BLUE			
68-86XZ		TRIM(L),TRUNK SIDE-LOWER			
FC01-68-87Y	1	BASE, (W/O RR PACKAGE TRAY TRIM)			
02	INT-	FD8 BLACK			
48	INT-	FD9 BLUE			

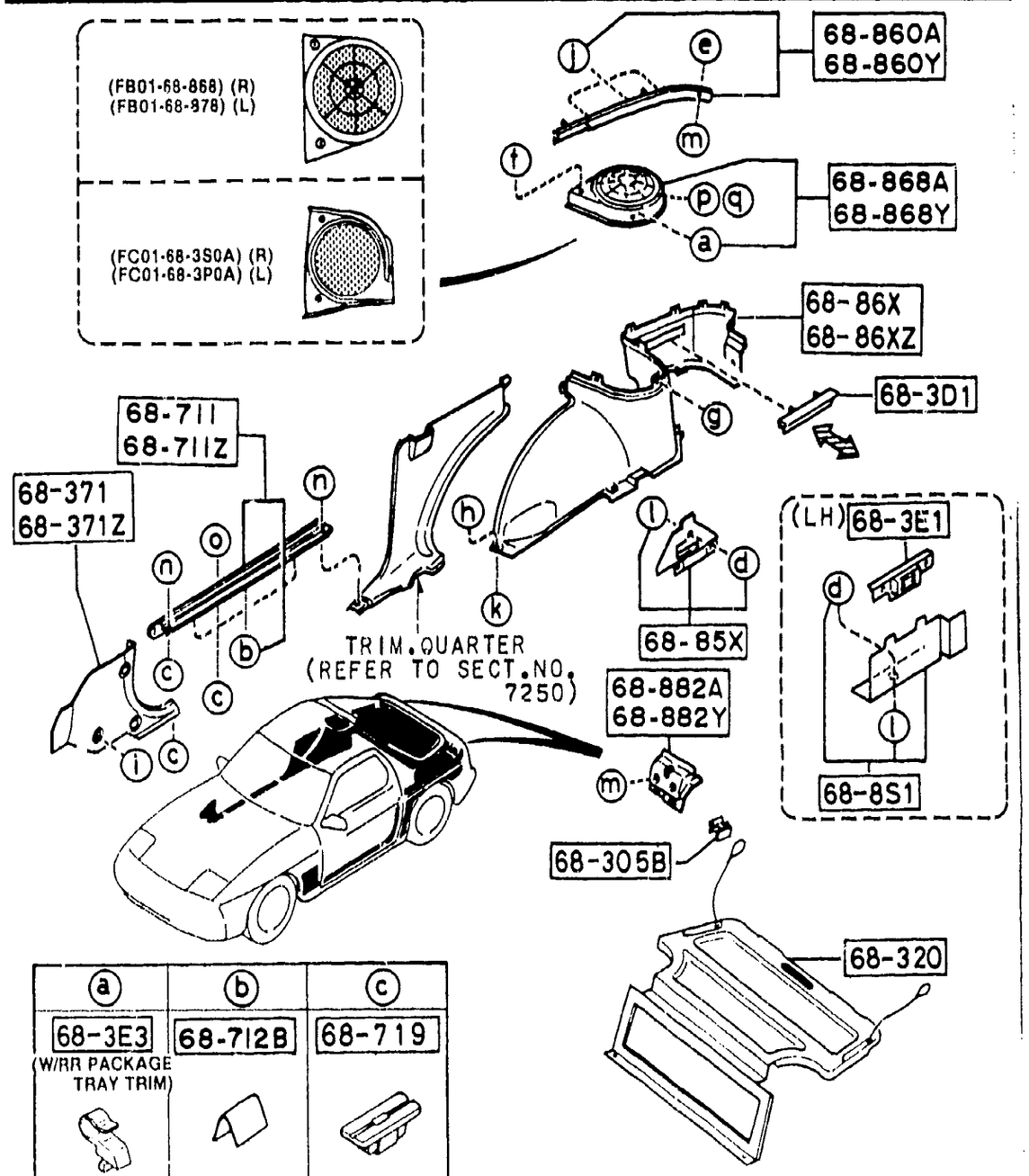

a	b	c
68-3E3 (W/RR PACKAGE TRAY TRIM)	68-712B	68-719

d	e	f	g	h	i	j
68-852	68-853A	68-865 (B040-68-865A)	68-865 (G032-68-865A)	68-865D	68-865E	68-865N

k	l	m	n	o	p	q
68-866C	9957-50-600	9986-40-416B	9986-40-430B	9976-90-416B	9986-50-416B	9991-00-401

PART NO.	QTY	MODEL/RESTRICTION	MODEL/RESTRICTION	MODEL/RESTRICTION	FROM-TO
CONT'D					
FC04-68-87Y	1	BASE-OPT-2, TURBO, (W/RR PACKAGE TRAY TRIM)			
02	INT-	FD8 BLACK			
48	INT-	FD9 BLUE			
68-860A		TRIM(R),TRUNK SIDE-UPPER			
FB01-68-860	1				
02	INT-	FD8 FE1 BLACK			
48	INT-	FD9 BLUE			
68-860Y		TRIM(L),TRUNK SIDE-UPPER			
FB01-68-870	1				
02	INT-	FD8 FE1 BLACK			
48	INT-	FD9 BLUE			
68-865		FASTENER			
B040-68-865A	4				
00	INT-	FD8 BLACK			
48	INT-	FD9 BLUE			
G032-68-865A	14				
00	INT-	FD8 FE1 BLACK			
48	INT-	FD9 BLUE			
68-865D		FASTENER			
S083-68-865A	7				
00	INT-	FD8 FE1 BLACK			
48	INT-	FD9 BLUE			
68-865E		FASTENER			
S049-68-865	6				
00	INT-	FD8 FD9 FE1 FE0 BLACK			
48	INT-	FD9 BLUE			
68-865N		CLIP,TRIM			
H002-68-865	6				
68-866C		FASTENER,SEAL			

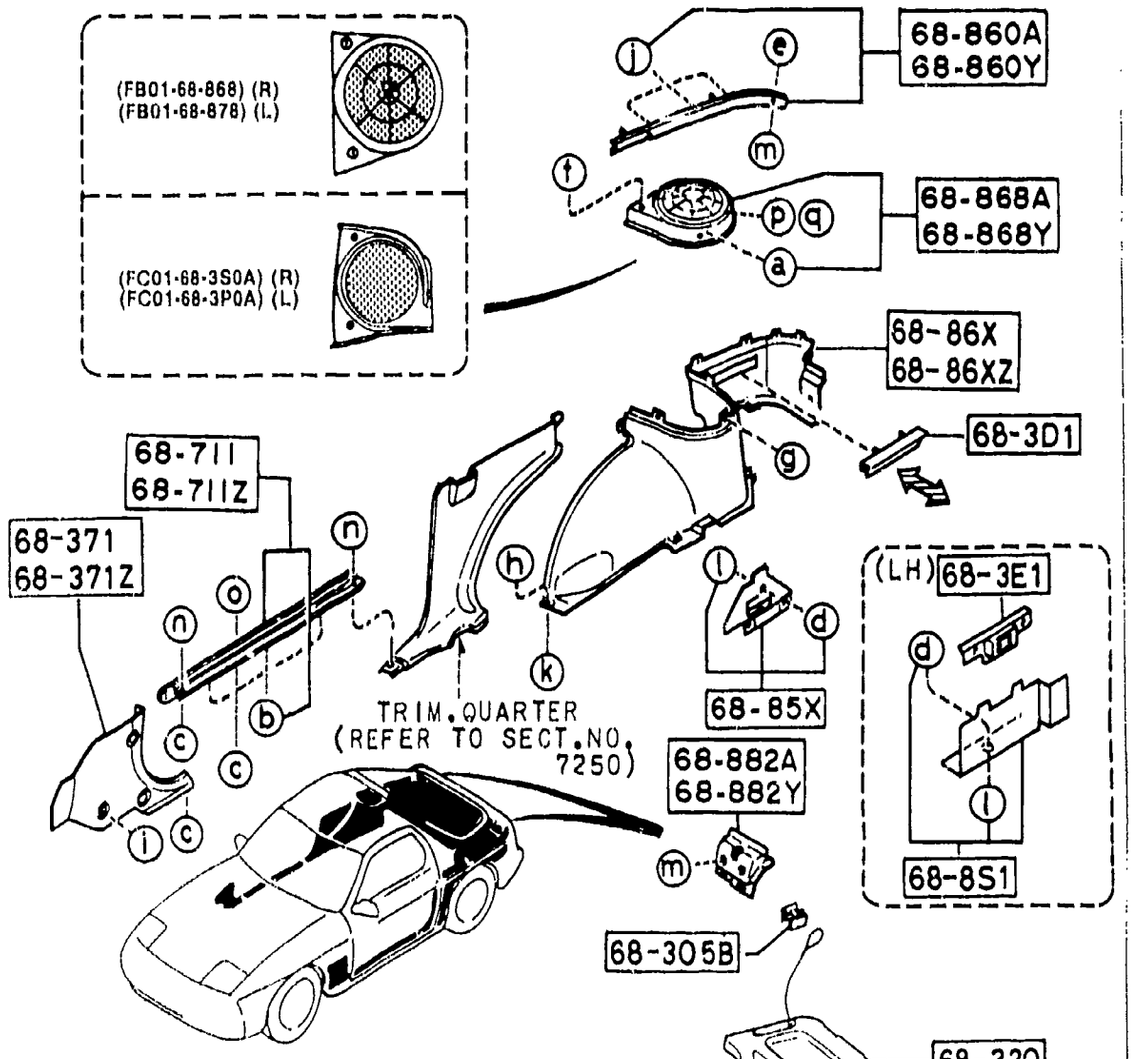

ⓐ	ⓑ	ⓒ
68-3E3 (W/RR PACKAGE TRAY TRIM)	68-712B	68-719

ⓓ	ⓔ	ⓕ	ⓖ	ⓗ	ⓘ	ⓙ
68-852	68-853A	68-865 (B040-68-865A)	68-865 (G032-68-865A)	68-865D	68-865E	68-865N

ⓚ	ⓛ	ⓜ	ⓝ	ⓞ	ⓟ	ⓠ
68-866C	9957-50-600	9986-40-416B	9586-40-430B	9976-90-416B	9986-50-416B	9991-00-401

PART NO.	QTY	MODEL/RESTRICTION	MODEL/RESTRICTION	MODEL/RESTRICTION	FROM-TO
CONT'D					
B235-68-865A	7				
68-868A		GRILLE(R),SPEAKER-T/TRIM			
FC01-68-3S0A	1	BASE-OPT-2, TURBO, (W/RR PACKAGE TRAY TRIM)			
02	INT-	FD8 BLACK			
48	INT-	FD9 BLUE			
FB01-68-868	1	BASE, (W/O RR PACKAGE TRAY TRIM)			
02	INT-	FD8 BLACK			
48	INT-	FD9 BLUE/BLACK			
68-868Y		GRILLE(L),SPEAKER-T/TRIM			
FC01-68-3P0A	1	BASE-OPT-2, TURBO, (W/RR PACKAGE TRAY TRIM)			
02	INT-	FD8 BLACK			
48	INT-	FD9 BLUE			
FB01-68-878	1	BASE, (W/O RR PACKAGE TRAY TRIM)			
02	INT-	FD8 BLACK			
48	INT-	FD9 BLUE/BLACK			
68-882A		COVER(R),T/END TRIM			
FB01-68-894B	1				
02	INT-	FD8 FE1 BLACK			
48	INT-	FD9 BLUE			
68-882Y		COVER(L),T/END TRIM			
FB01-68-895B	1				
02	INT-	FD8 FE1 BLACK			
48	INT-	FD9 BLUE			

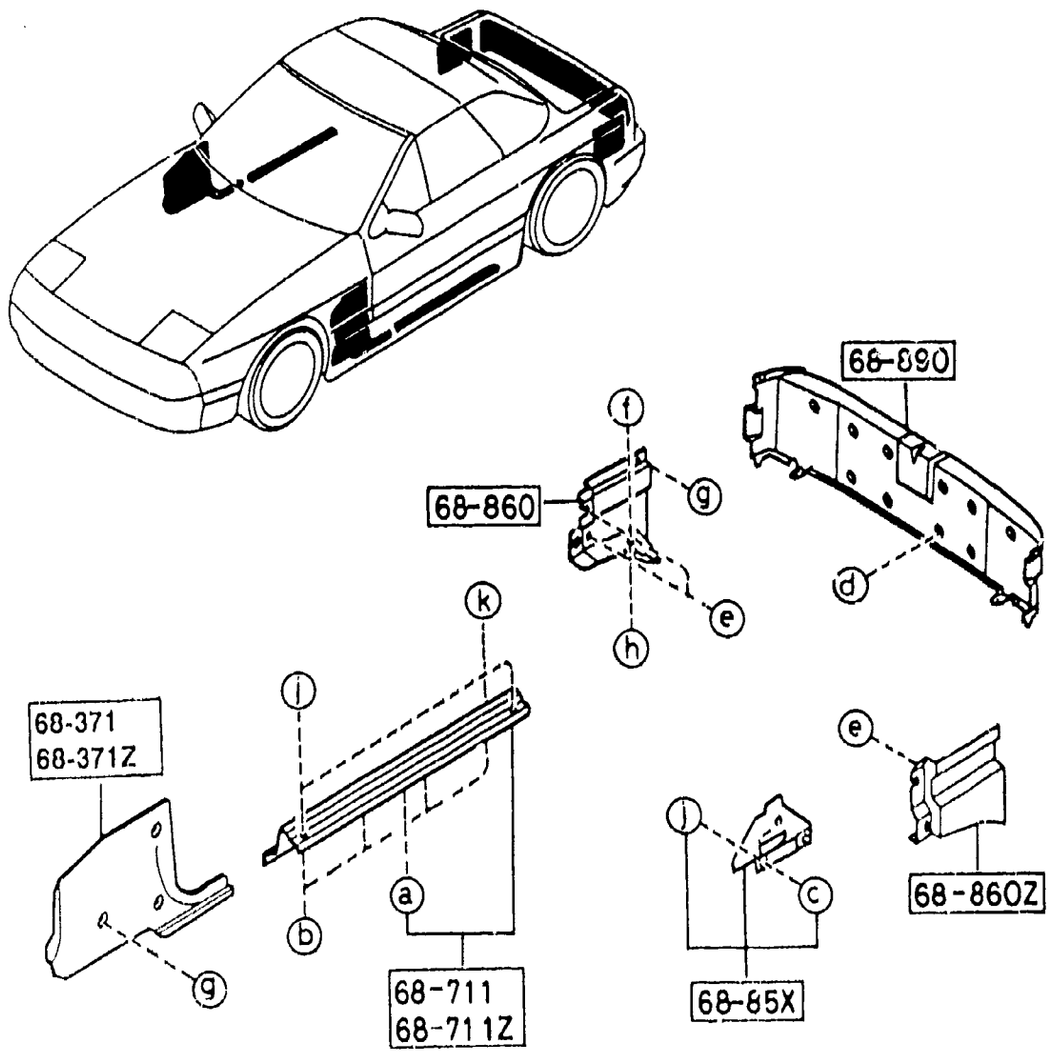

ⓐ	ⓑ	ⓒ	ⓓ	ⓔ	ⓕ	ⓖ
68-712B	68-719	68-852	68-865 (FB67-58-865)	68-865 (G032-68-865A)	68-865D	68-865E

ⓗ	ⓘ	ⓙ	ⓚ
68-866C	9957-50-600	9986-40-430B	9976-90-416B

PART NO	QTY	MODEL/RESTRICTION	MODEL/RESTRICTION	MODEL/RESTRICTION	FROM-TO
68-371		TRIM(R),FRONT SIDE			
FB67-68-370	1				
02	INT-	FD8 FE1 BLACK			
48	INT-	FD9 BLUE			
68-371Z		TRIM(L),FRONT SIDE			
FB67-68-390	1				
02	INT-	FD8 FE1 BLACK			
48	INT-	FD9 BLUE			
68-711		PLATE(R),FRONT SCUFF			
FB67-68-710	1				
02	INT-	FD8 FE1 BLACK			
48	INT-	FD9 BLUE			
68-711Z		PLATE(L),FRONT SCUFF			
FB67-68-720	1				
02	INT-	FD8 FE1 BLACK			
48	INT-	FD9 BLUE			
68-712B		CLIP			
B235-68-712	2				
68-719		GROMMET,SCREW			
*B235-68-719	8				
68-85X		LID,SIDE-TRUNK ROOM			
FB01-68-85X	1				
68-852		FASTENER,TURN-SIDE LID			
FB01-68-852	2				
68-860		TRIM(R),TRUNK SIDE			
FB67-68-861	1				
07	INT-	FD8 FD9 FE1 DARK GRAY			
68-860Z		TRIM(L),TRUNK SIDE			
FB67-68-871	1				

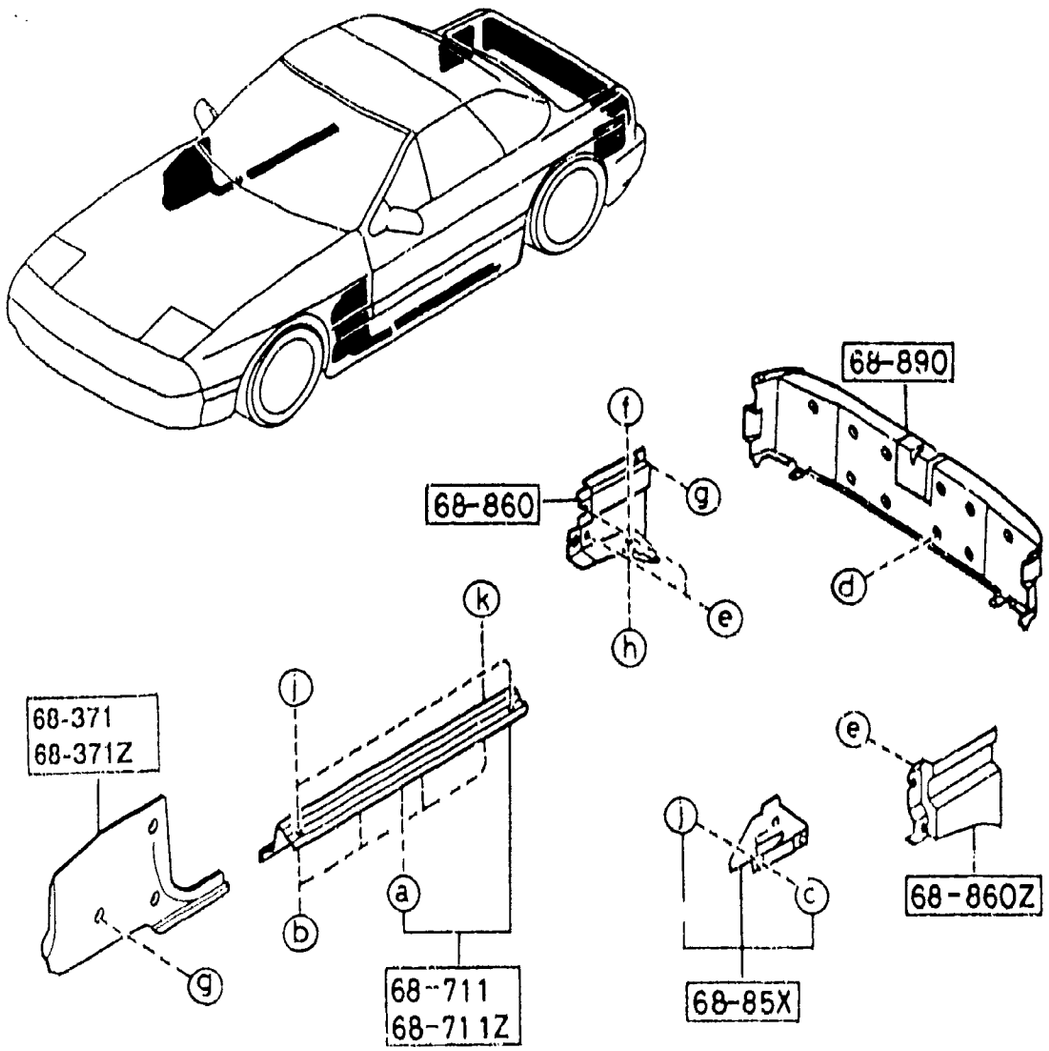

PART NO.	QTY	MODEL/RESTRICTION	MODEL/RESTRICTION	MODEL/RESTRICTION	FROM-TO
CONT'D					
07	INT-	FD8 FD9 FE1 DARK GRAY			
68-865		FASTENER			
FB67-68-865	13				
09	INT-	FD8 FD9 FE1 DARK GRAY			
G032-68-865A	7				
09	INT-	FD8 FD9 FE0 FE1 DARK GRAY			
68-865D		FASTENER			
S003-68-865A	1				
09	INT-	FD8 FD9 FE1 FE0 DARK GRAY			
68-865E		FASTENER			
S049-68-865	6				
00	INT-	FD8 FE1 FE0 BLACK			
48	INT-	FD9 BLUE			
68-866C		FASTENER, SEAL			
B235-68-865A	1				
68-890		TRIM, TRUNK END			
FB67-68-891B	1				
07	INT-	FD8 FD9 FE1 DARK GRAY			

a	b	c	d	e	f	g
68-712B	68-719	68-852	68-865	68-865	68-865D	68-865E
			(FB67-68-865)	(G032-68-865A)		

h	i	j	k
68-866C	9957-50-600	9986-40-430B	9976-90-416B

6845 STRAGE BOX

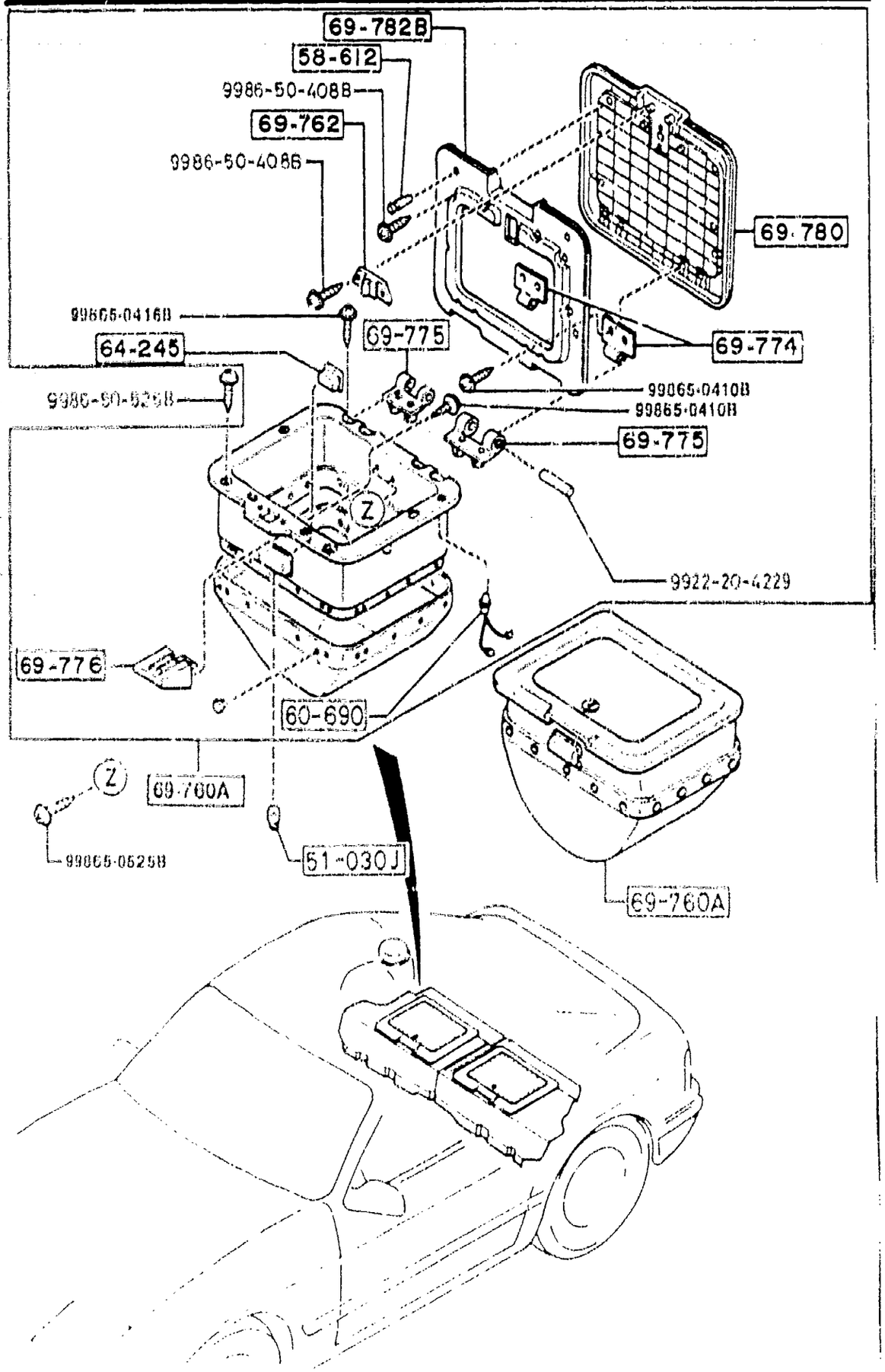

PART NO.	QTY	MODEL/RESTRICTION	MODEL/RESTRICTION	MODEL/RESTRICTION	FROM-TO
51-030J		BULB			
99701-6030	2	12V 3.4W			
58-612		CUSHION,RUBBER			
0259-58-612	4				
60-690		SWITCH,GLOVE TRAY			
0030-66-540B	2				
64-245		LENS,SIDE WALL			
H002-64-245	2				
69-760A		BOX,STORAGE			
FC01-69-760A	2				
03	INT-	FD8 DARK GRAY/BLACK			
49	INT-	FD9 DARK GRAY/BLUE			
69-762		PLATE,LOCK			
FB01-69-762	2				
03	INT-	FD8 DARK GRAY/BLACK			
49	INT-	FD9 DARK GRAY/BLUE			
69-774		HINGE NO.1,STORAGE BOX			
FB01-69-774	4				
07	INT-	FD8 DARK GRAY			
48	INT-	FD9 BLUE			
69-775		HINGE NO.2,STORAGE BOX			
FB01-69-775	4				
07	INT-	FD8 DARK GRAY			
48	INT-	FD9 BLUE			
69-776		STRIKER,STORAGE BOX			
FB01-69-776	2				
69-780		LID,OUTER-STORAGE BOX			
FB01-69-780	2				
03	INT-	FD8 DARK GRAY/BLACK			

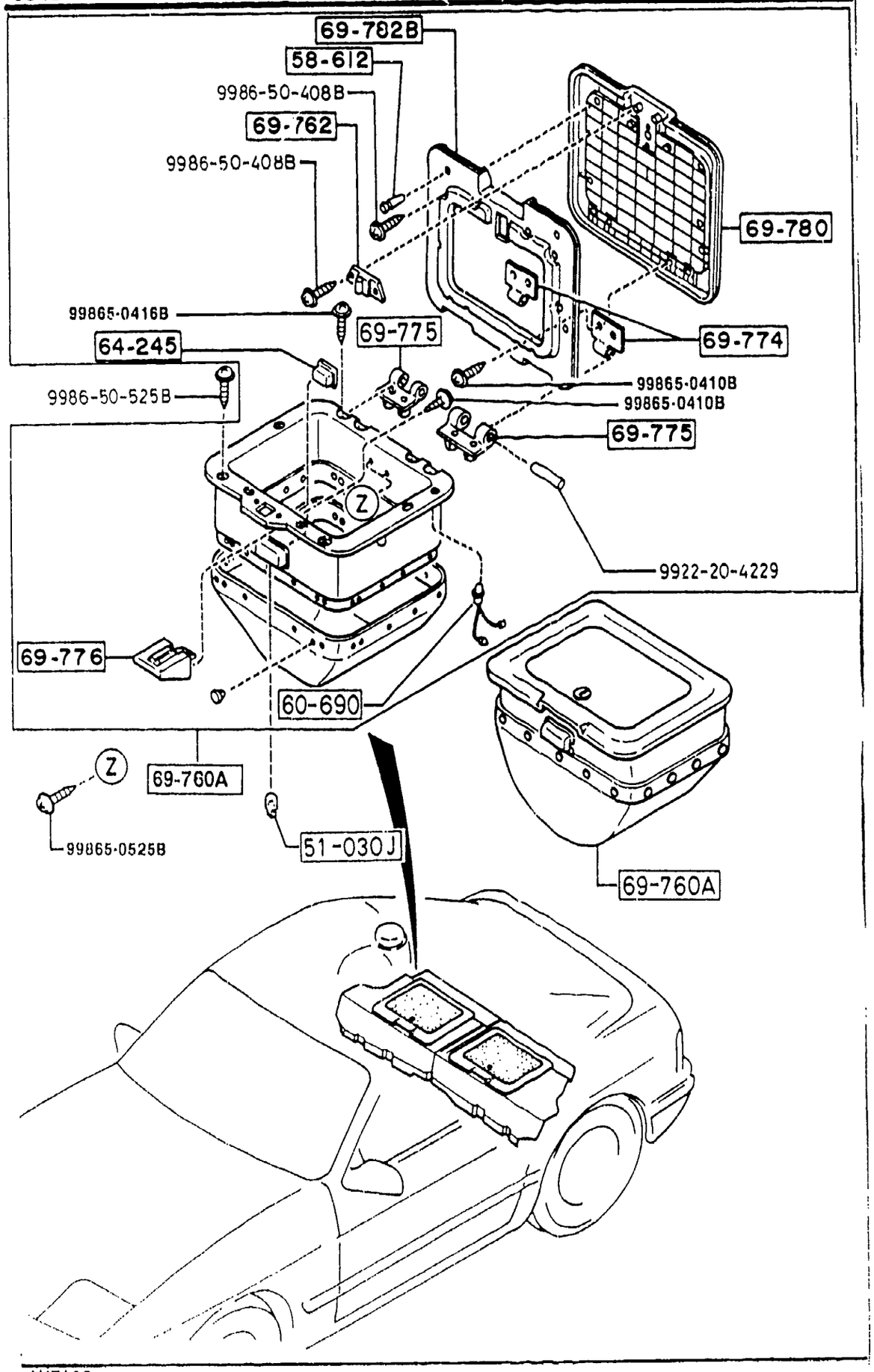

AUFA03

6845 -2 * STRAGE BOX

PART NO.	QTY	MODEL/RESTRICTION	MODEL/RESTRICTION	MODEL/RESTRICTION	FROM-TO
CONT'D					
49 INT-		FD9 DARK GRAY/BLUE			
+---------+					
| 69-782B |		LID,INNER-STORAGE BO X			
+---------+					
FB01-69-782A	2				
03 INT-		FD8 DARK GRAY/BLACK			
49 INT-		FD9 DARK GRAY/BLUE			

CAT. AUFA03-07

1993-12

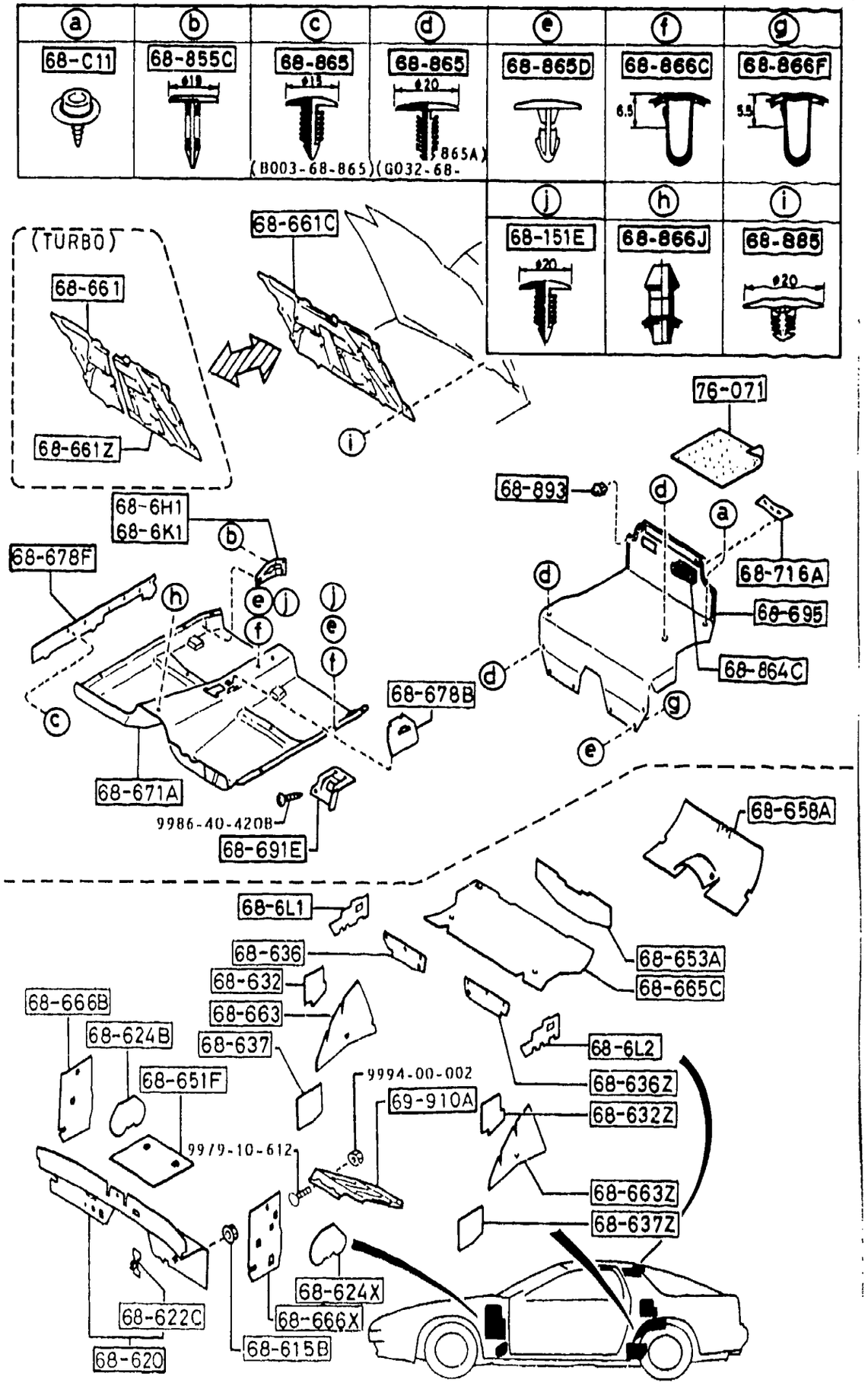

AUFA03

PART NO.	QTY	MODEL/RESTRICTION	MODEL/RESTRICTION	MODEL/RESTRICTION	FROM-TO
68-C11		HOOK,SCREW-TRUNK MAT			
FC01-68-C11B	3				
68-151E		CLIP			
B102-68-865	4				1A01-
00	INT-	FE1 FD8 BLACK			
48	INT-	FD9 BLUE			
68-6H1		COVER(R),LAP BELT			
FC01-68-6H1B	1				
02	INT-	FD8 FE1 BLACK			
48	INT-	FD9 BLUE			
68-6K1		COVER(L),LAP BELT			
FC01-68-6K1B	1				
02	INT-	FD8 FE1 BLACK			
48	INT-	FD9 BLUE			
68-6L1		COVER'A',HOLE			
FC01-68-6L1	1				
68-6L2		COVER'B',HOLE			
FC01-68-6L2	1				
68-615B		NUT,FLANGE-CAP			
B100-68-615	13				
68-620		INSULATOR,DASHBOARD			
FB02-68-620A	1	(W/O RR WIPER)			
FB04-68-620A	1	(W/RR WIPER)			
68-622C		CLIP,DASHBOARD INSULATOR			
FB01-68-622	4				
68-624B		COVER(R),HOLE-DASH. INSU.			
FB01-68-624	1				
68-624X		COVER(L),HOLE-DASH. INSU.			
FB01-68-625	1				

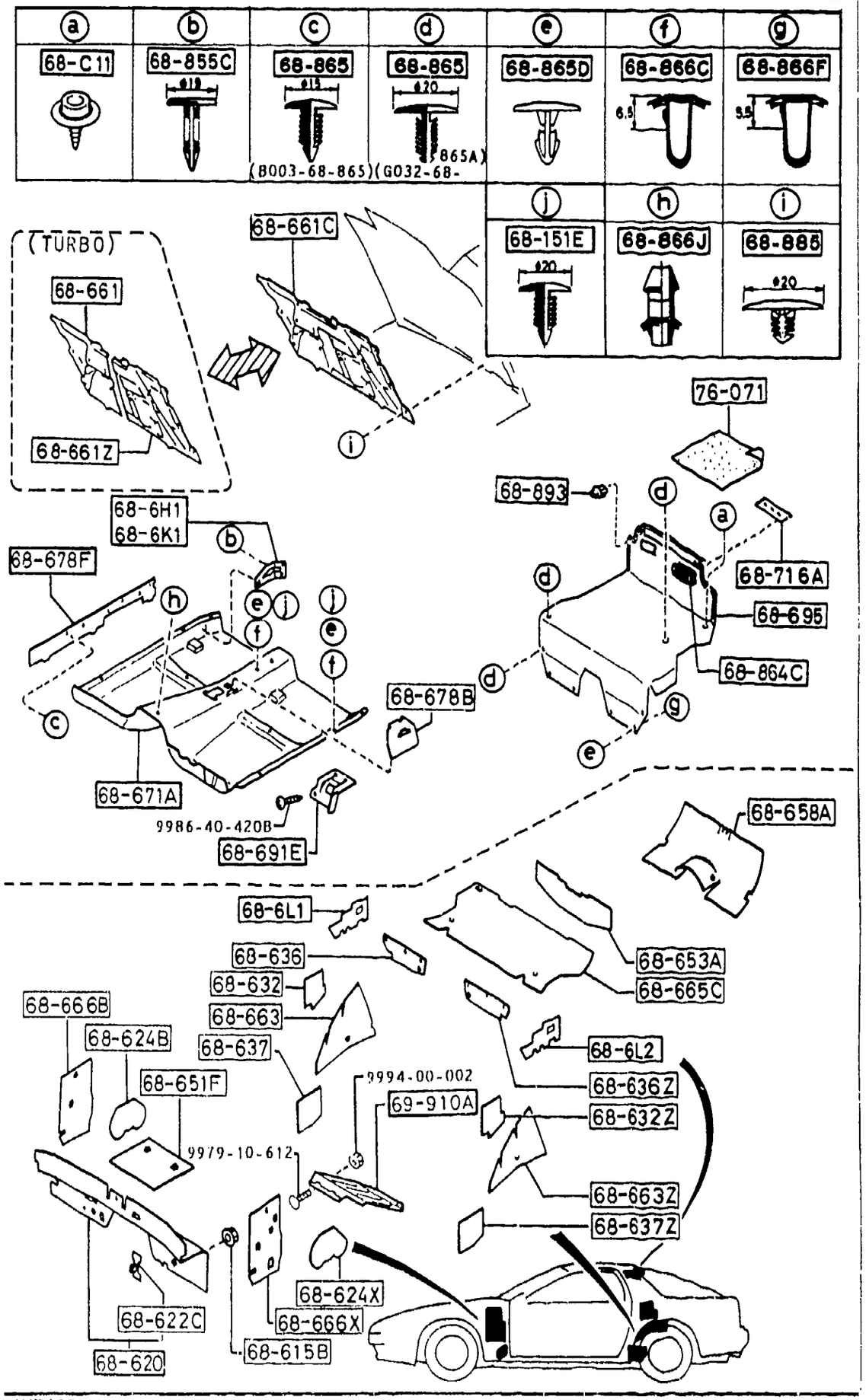

PART NO.	QTY	MODEL/RESTRICTION	MODEL/RESTRICTION	MODEL/RESTRICTION	FROM-TO
68-632		COVER(R),RETRACTOR			
FB01-68-632	1				
68-632Z		COVER(L),RETRACTOR-REAR			
FB01-68-642	1				
68-636		INSULATOR(R),CROSSMEMBER			
FB01-68-636A	1				
68-636Z		INSULATOR(L),CROSSMEMBER			
FB01-68-646A	1				
68-637		COVER(R),RETRACTOR-FRONT			
FB01-68-637	1				
68-637Z		COVER(L),RETRACTOR-FRONT			
FB01-68-647	1				
68-651F		PAD,FRONT FLOOR			
FB01-68-652	1				
68-653A		INSULATOR,SPARE TIRE			
FB01-68-653	1				
68-658A		PAD,STRAGE BOX			
FB01-68-658	1	BASE, (W/O P-VC FELT)			
FB03-68-658	1	BASE-OPT, TURBO, (W/P-VC FELT)			
68-661		INSULATOR(R),BONNET			
F046-68-661B	1	(TURBO)			
68-661C		INSULATOR,BONNET			
FB03-68-661A	1	(W/O TURBO)			
68-661Z		INSULATOR(L),BONNET			
F046-68-662A	1	(TURBO)			
68-663		INSULATOR(R),TIRE HOUSE			
FB01-68-663	1	BASE, (W/O P-VC FELT)			

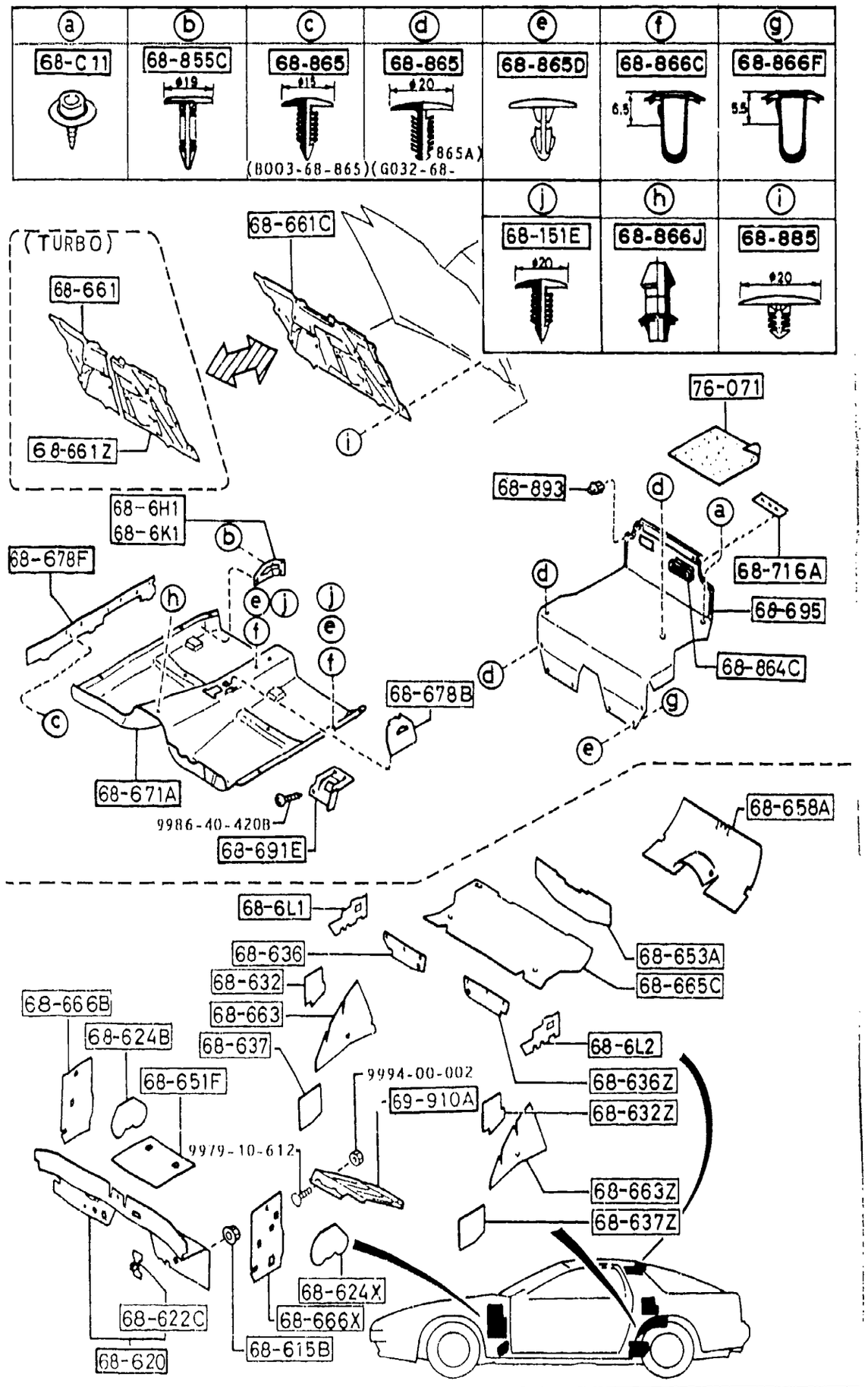

PART NO.	QTY	MODEL/RESTRICTION	MODEL/RESTRICTION	MODEL/RESTRICTION	FROM-TO
CONT'D					
FB03-68-663	1	BASE-OPT, TURBO, (W/P-VC FELT)			
+---------+					
| 68-663Z |		INSULATOR(L),TIRE HOUSE			
+---------+					
FB01-68-664	1	BASE, (W/O P-VC FELT)			
FB03-68-664	1	BASE-OPT, TURBO, (W/P-VC FELT)			
+---------+					
| 68-665C |		PAD,TRUNK			
+---------+					
FC01-68-814	1	BASE, (W/T=2MM P-VC FELT)			
FC02-68-814	1	BASE-OPT, TURBO, (W/T=4MM P-VC FELT)			
+---------+					
| 68-666B |		PAD(R),SIDE-DASHBOARD			
+---------+					
FB03-68-666A	1				
+---------+					
| 68-666X |		PAD(L),SIDE-DASHBOARD			
+---------+					
FB03-68-667A	1				
+---------+					
| 68-671A |		MAT,FLOOR			
+---------+					
FC02-68-671A	1	BASE, (W/STD INSULATOR)			
02	INT-	FD8 FE1 BLACK			
48	INT-	FD9 BLUE			
FC04-68-671A	1	BASE-OPT, TURBO, (W/DX INSULATOR)			
02	INT-	FD8 FE1 BLACK			
48	INT-	FD9 BLUE			
+---------+					
| 68-678B |		MAT,PARKING BRAKE			
+---------+					
FC02-68-679	1				
02	INT-	FD8 FE1 BLACK			
48	INT-	FD9 BLUE			
+---------+					
| 68-678F |		GUARD,HARNESS-FRONT			
+---------+					
FB67-68-678	2				
+---------+					
| 68-691E |		COVER,OPENER-FLOOR MAT			
+---------+					
FB01-68-691D	1				
02	INT-	FD8 FE1 BLACK			

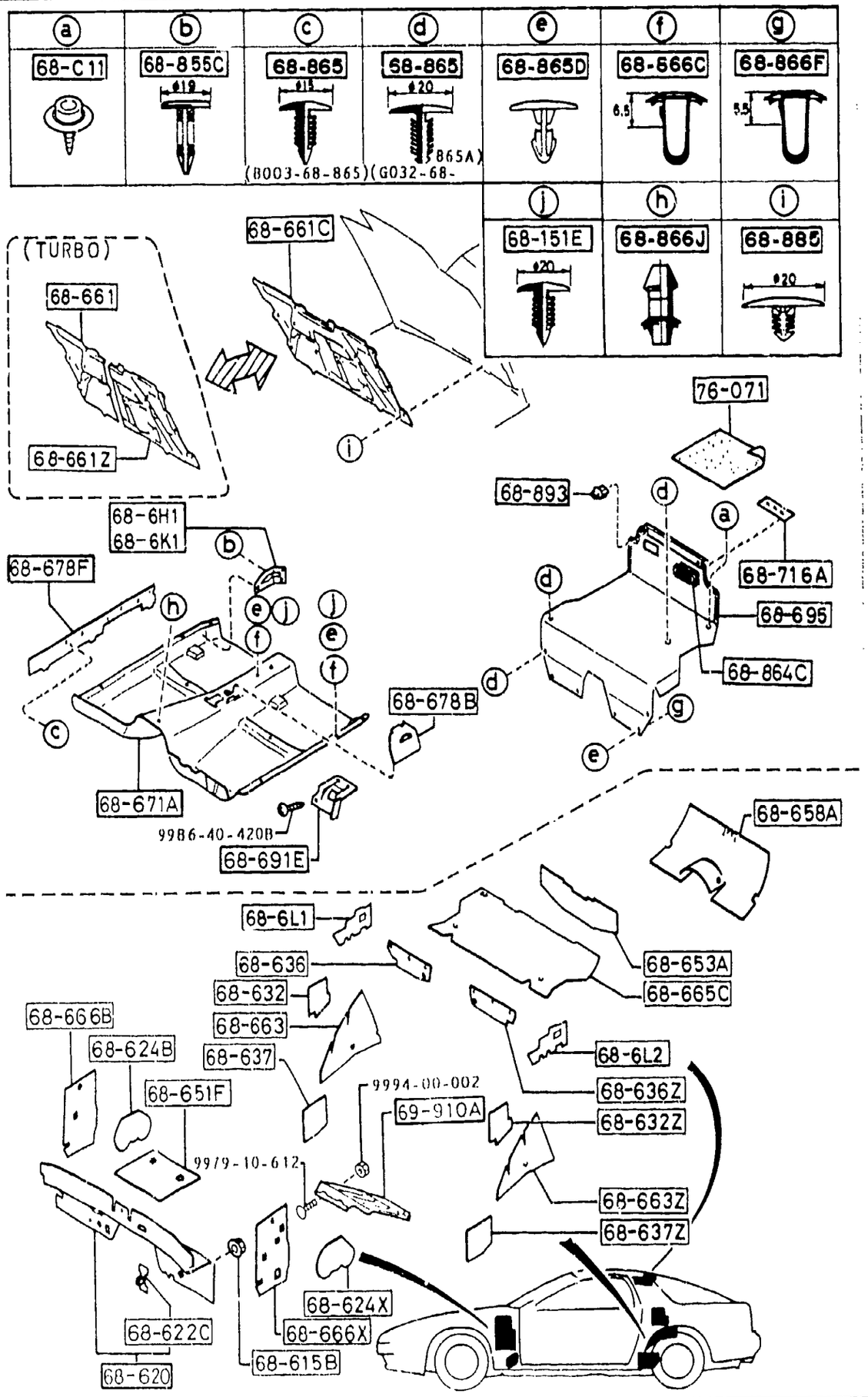

AUFA03

PART NO.	QTY	MODEL/RESTRICTION	MODEL/RESTRICTION	MODEL/RESTRICTION	FROM-TO
CONT'D					
48	INT-	FD9 BLUE			
68-695		MAT,TRUNK ROOM			
FC02-68-81XA	1	BASE, (W/O CARGO ROOM STRAP)			
02	INT-	FD8 BLACK			
48	INT-	FD9 BLUE			
FC04-68-81XA	1	BASE-OPT, TURBO, (W/CARGO ROOM STRAP)			
02	INT-	FD8 BLACK			
48	INT-	FD9 BLUE			
68-716A		NUT,SPEED			
FB03-68-862	2				
68-855C		FASTENER			
G043-68-865B	3				
C0	INT-	FD8 FD9 FE1 FE0 BLACK			
48	INT-	FD9 BLUE			
68-864C		GRILLE,EXTRACT.-T.S. TRIM			
FB01-68-864	2	FOR TEMPORARY TIRE			
02	INT-	FD8 FE1 BLACK			
48	INT-	FD9 BLUE			
68-865		FASTENER			
G032-68-865A	14				
00	INT-	FD8 FE1 bLACK			
48	INT-	FD9 BLUE			
B003-68-865	11				-1A01
65	INT-	FD8 FD9 FE0			
B003-68-865	7				1A01-
65	INT-	FD8 FD9 FE0 FE1 OFF-BLACK			
68-865D		FASTENER			

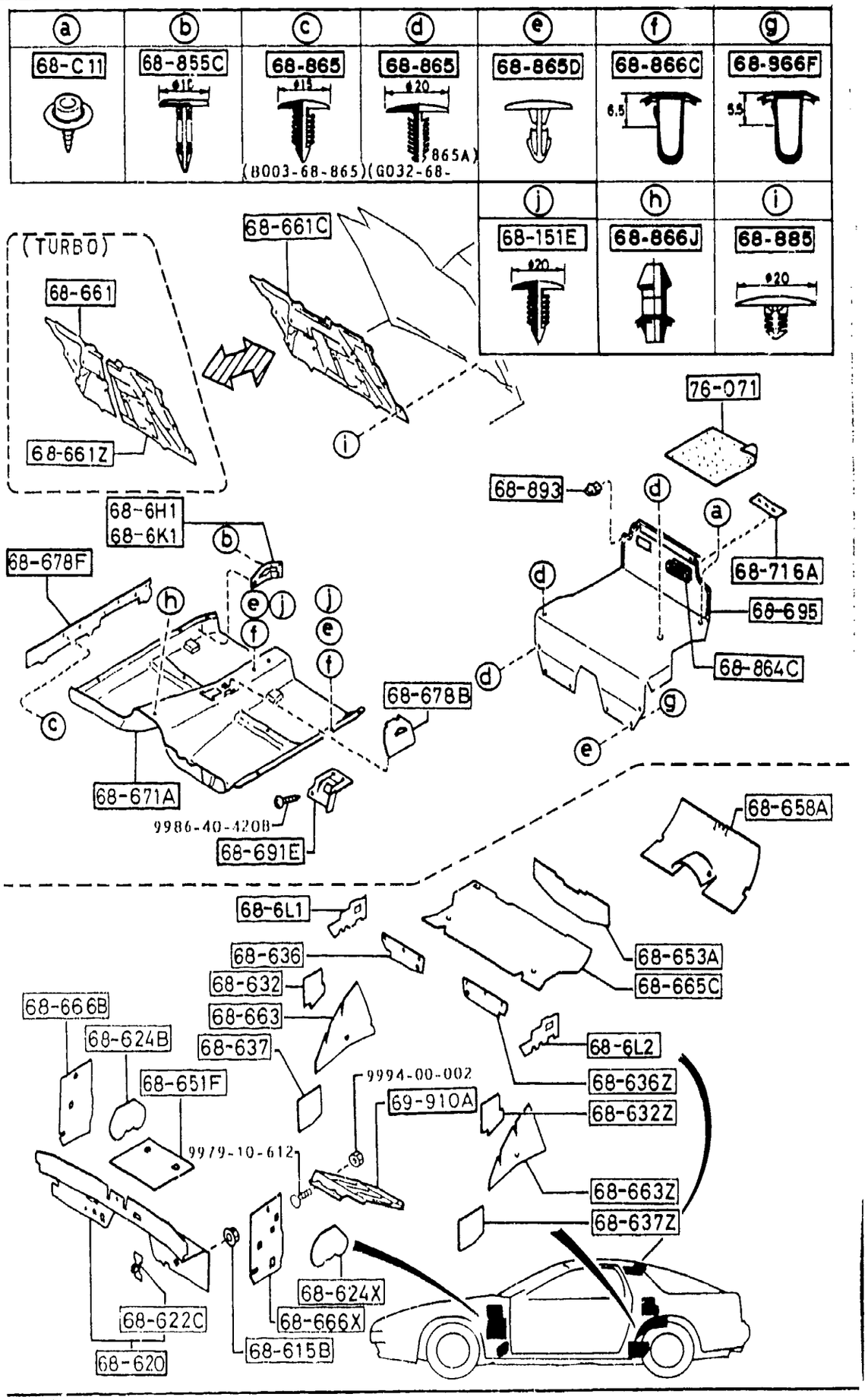

AUFA03

PART NO.	QTY	MODEL/RESTRICTION	MODEL/RESTRICTION	MODEL/RESTRICTION	FROM-TO
CONT'D					
S083-68-865A	7				-1A01
00	INT-	FD8 FE1 BLACK			
48	INT-	FD9 BLUE			
S083-68-865A	3				1A01-
00	INT-	FD8 FE1 BLACK			
48	INT-	FD9 BLUE			
+---------+ | 68-866C | +---------+		FASTENER,SEAL			
B235-68-865A	7				-1A01
B235-68-865A	3				1A01-
+---------+ | 68-866F | +---------+		FASTENER,SEAL			
G031-68-866B	4				
+---------+ | 68-866J | +---------+		FASTENER,SEAL			
FB01-68-866	1				
+---------+ | 68-885 | +---------+		FASTENER			
G030-68-885C	16				
00	INT-	FD8 FD9 FE1 BLACK			
+---------+ | 68-893 | +---------+		LATCH,TRUNK END TRIM			
FB01-68-893	2				
02	INT-	FD8 FE1 BLACK			
48	INT-	FD9 BLUE			
+---------+ | 69-910A | +---------+		SUPPORT,FOOT			
FB01-69-697A	1				
+---------+ | 76-071 | +---------+		SILENCER,FLOOR			
0208-76-071	1	30CMX30CM			

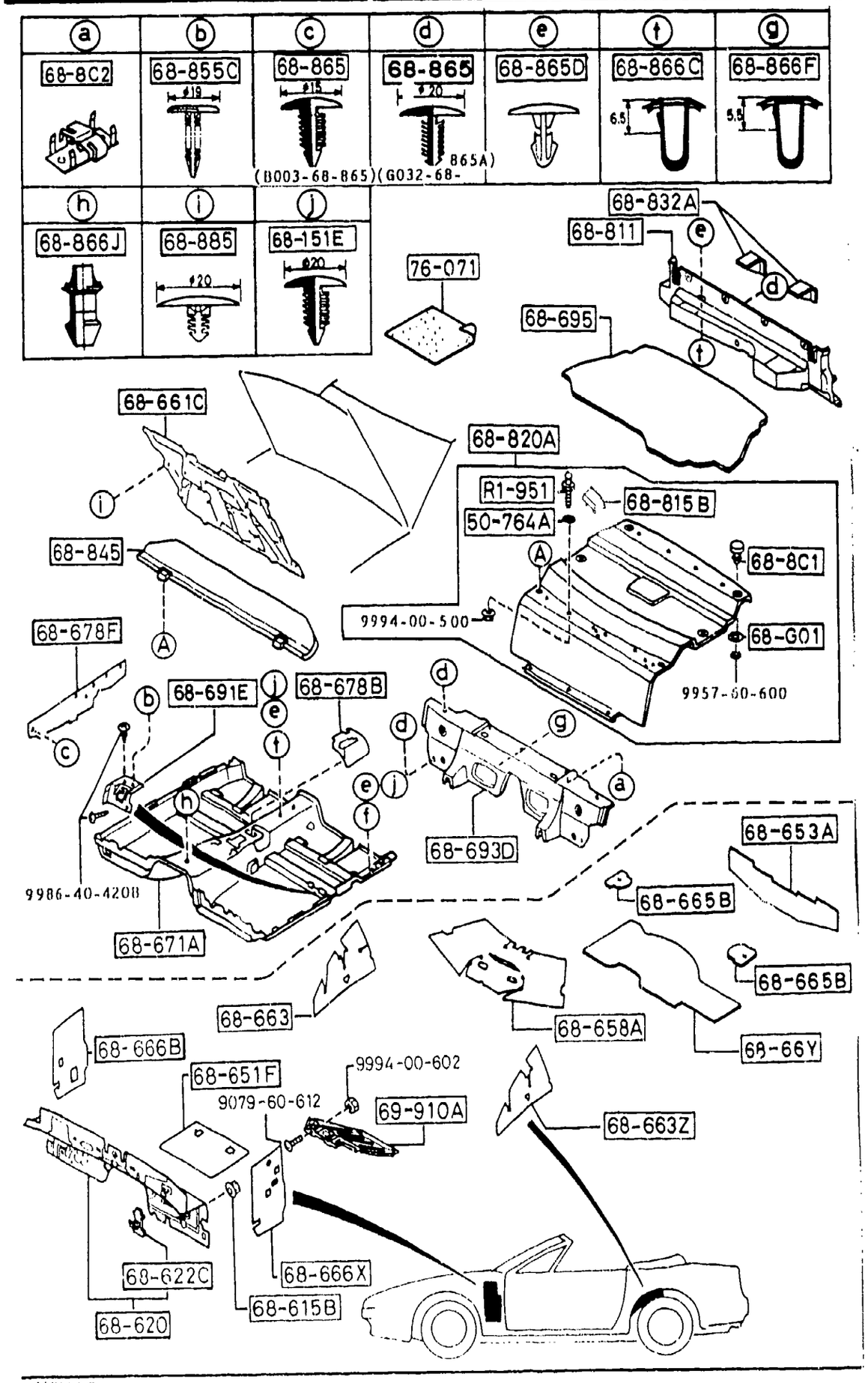

AUFA03

PART NO.	QTY	MODEL/RESTRICTION	MODEL/RESTRICTION	MODEL/RESTRICTION	FROM-TO
R1-951		HOOK'A',HOOD COVER-REAR			
B235-R1-951C	2				
50-764A		WASHER,COVER-SPARE TIRE			
FB67-50-764A	2				
68-G01		WASHER,SPARE TIRE COVER			
FB67-68-G01	6				
68-151E		CLIP			
B102-68-865	4				1A01-
00	INT-	FD8 FE1 BLACK			
48	INT-	FD9 BLUE			
68-615B		NUT,FLANGE-CAP			
B100-68-615	11				
68-620		INSULATOR,DASHBOARD			
FB67-68-620	1				
68-622C		CLIP,DASHBOARD INSULATOR			
FB01-68-622	4				
68-651F		PAD,FRONT FLOOR			
FB01-68-652	1				
68-653A		INSULATOR,SPARE TIRE			
FB01-68-653	1				
68-658A		PAD,STRAGE BOX			
FB67-68-658A	1				
68-66Y		PAD,FLOOR-REAR			
FB67-68-66Y	1				
68-661C		INSULATOR,BONNET			
FB03-68-661A	1				
68-663		INSULATOR(R),TIRE HOUSE			
FB01-68-663	1				

CAT. AUFA03-07

1993-12

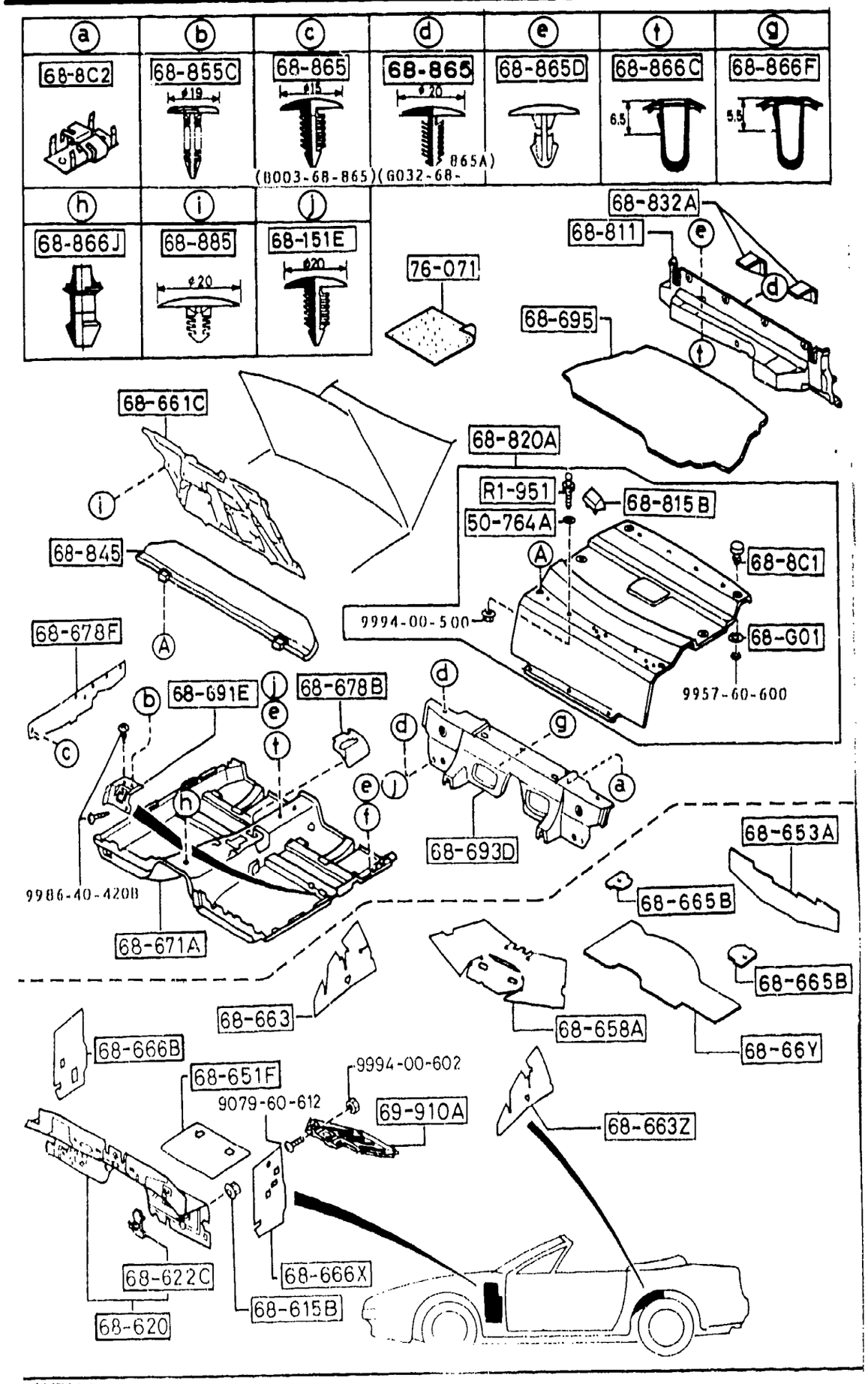

AUFA03

PART NO.	QTY	MODEL/RESTRICTION	MODEL/RESTRICTION	MODEL/RESTRICTION	FROM-TO
68-663Z		INSULATOR(L),TIRE HOUSE			
FB01-68-664	1				
68-665B		PAD,SUSPENSION			
FB67-68-665	2				
68-666B		PAD(R),SIDE-DASHBOARD			
FB03-68-666A	1				
68-666X		PAD(L),SIDE-DASHBOARD			
FB03-68-667A	1				
68-671A		MAT,FLOOR			
FC66-68-671	1				
02	INT-	FD8 BLACK			
48	INT-	FD9 BLUE			
68-678B		MAT,PARKING BRAKE			
FB67-68-673	1				
02	INT-	FD8 FE1 BLACK			
48	INT-	FD9 BLUE			
68-678F		GUARD,HARNESS-FRONT			
FB67-68-678	2				
68-691E		COVER,OPENER-FLOOR MAT			
FB01-68-691D	1				
02	INT-	FD8 FE1 BLACK			
48	INT-	FD9 BLUE			
68-693D		MAT,REAR END			
FC66-68-693	1				
02	INT-	FD8 FE1 BLACK			
48	INT-	FD9 BLUE			
68-695		MAT,TRUNK ROOM			
FB67-68-831B	1				
07	INT-	FD8 FD9 FE1 GRAY/DARK GRAY			

CAT. AUFA03-07

1993-12

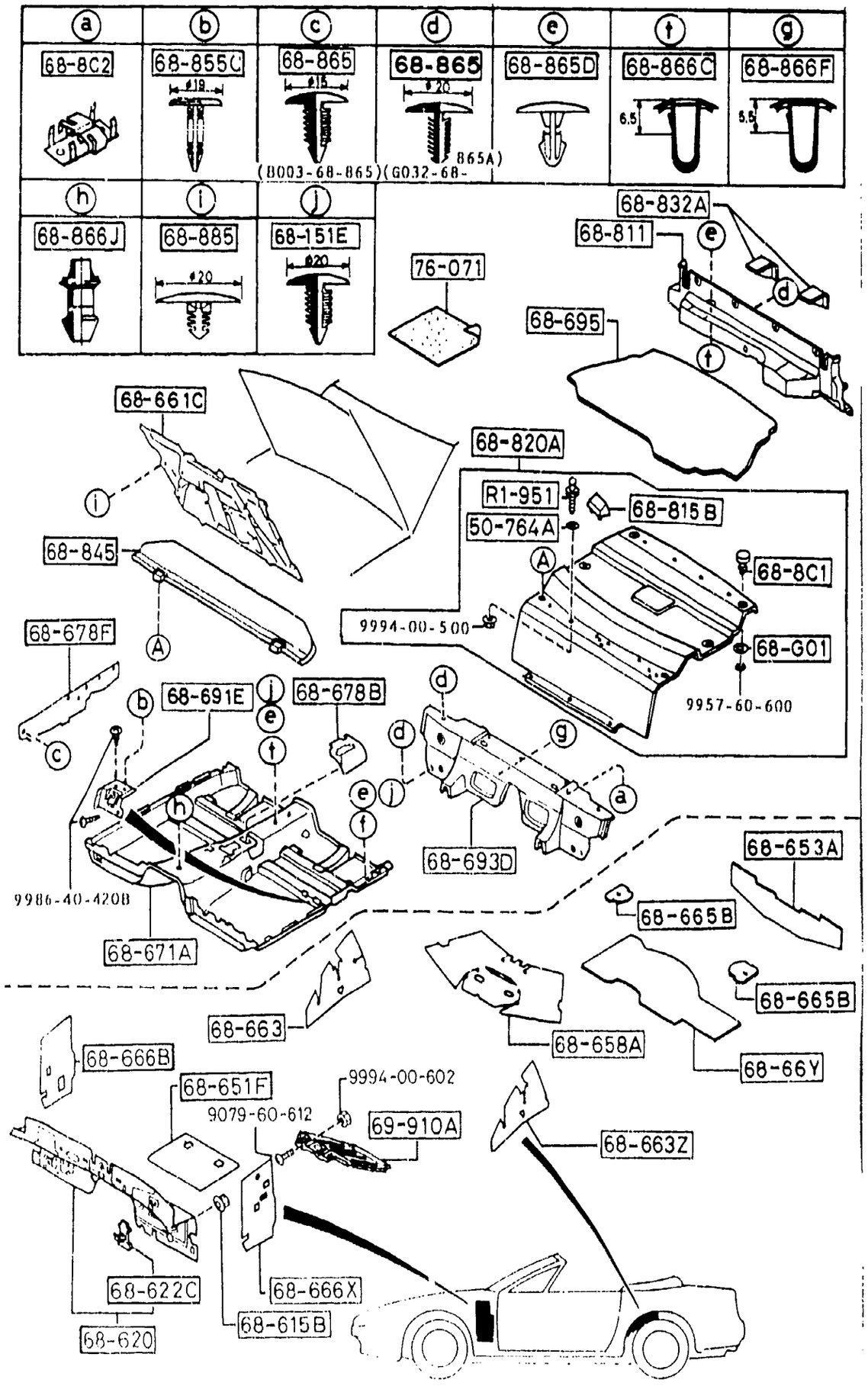

PART NO.	QTY	MODEL/RESTRICTION	MODEL/RESTRICTION	MODEL/RESTRICTION	FROM-TO
68-8C1		FASTENER,TAPPING			
FB67-68-8C1	6				
02	INT-	FD8 FE1 BLACK			
48	INT-	FD9 BLUE			
68-8C2		NUT,EXPANSION			
FB67-68-8C2	2				
68-811		BOARD,PARTITION			
FC33-68-82XA	1				
07	INT-	FD8 FD9 FE1 DARK GRAY			
68-815B		RUBBER,CUSHION			
FB67-68-815	2				
68-820A		COVER,SPARE TIRE			
FB67-68-810D	1				
02	INT-	FD8 FE1 BLACK			
48	INT-	FD9 BLUE			
68-832A		BRACKET,TRUNK BOARD			
FB67-68-832	2				
68-845		BOARD,AIR			
FB67-68-845	1				
02	INT-	FD8 FE1 BLACK			
48	INT-	FD9 BLUE			
68-855C		FASTENER			
G043-68-865B	1				
00	INT-	FE1 FE0 FD8 BLACK			
48	INT-	FD9 BLUE			
68-865		FASTENER			
*G032-68-865A	14				
* 00	INT-	FD8 FE1 BLACK			
09	INT-	FD8 FD9 FE0 FE1 DARK GRAY			

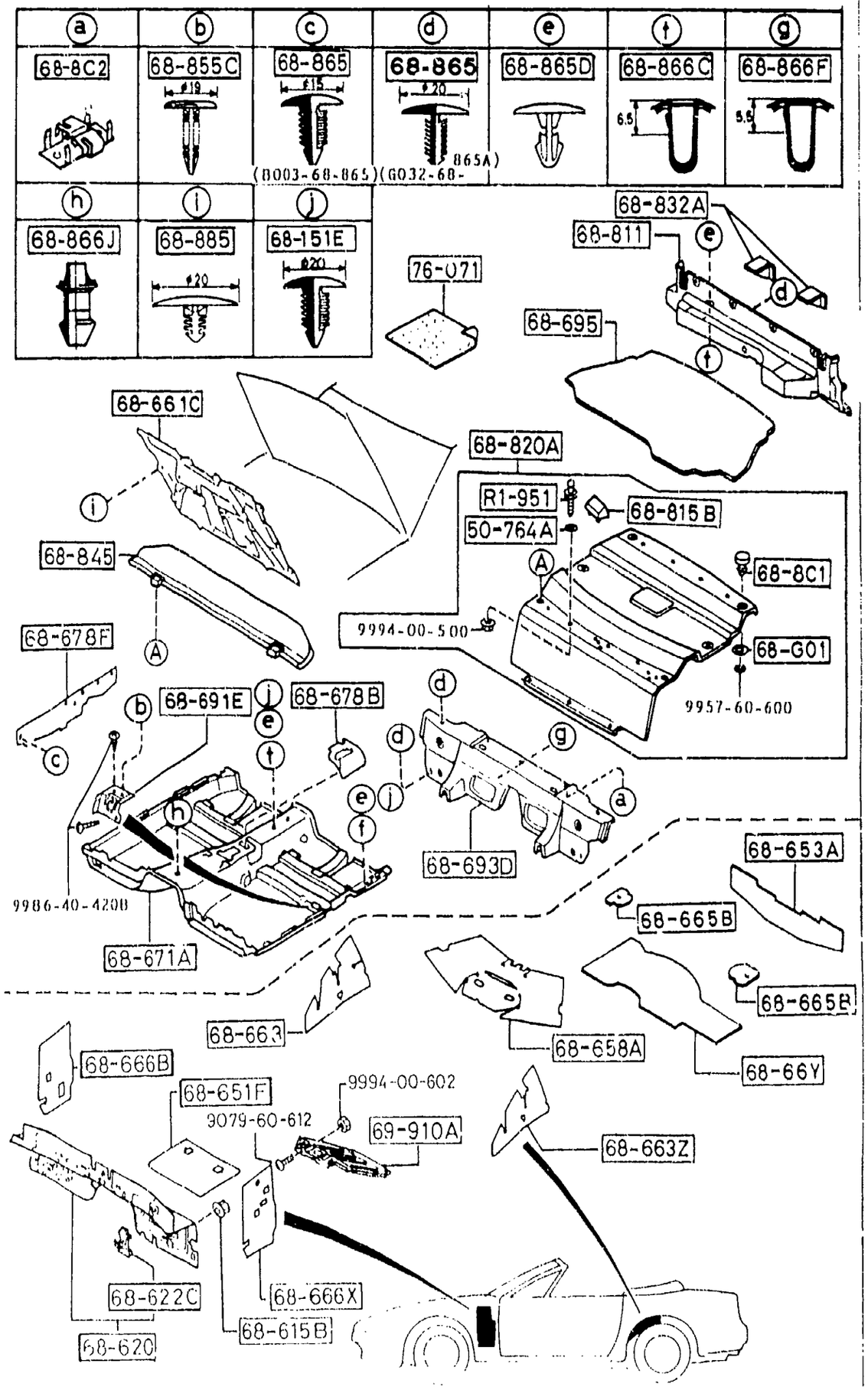

PART NO.	QTY	MODEL/RESTRICTION	MODEL/RESTRICTION	MODEL/RESTRICTION	FROM-TO
CONT'D					
* 48	INT-	FD9 BLUE			
B003-68-865	11				-1A01
65	INT-	FD8 FD9 FE0 FE1 OFF-BLACK			
B003-68-865	7				1A01-
65	INT-	FD8 FD9 FE0 FE1 OFF-BLACK			
68-865D		FASTENER			
S083-68-865A	12				-1A01
09	INT-	FD8 FE1 FE0 FD9 DARK GRAY			
48	INT-	FD9 BLUE			
*S083-68-865A	3				1A01-
09	INT-	FD8 FE1 FE0 FD9 DARK GRAY			
48	INT-	FD9 BLUE			
68-866C		FASTENER,SEAL			
B235-68-865A	7				-1A01
B235-68-865A	3				1A01-
68-866F		FASTENER,SEAL			
G031-68-866B	2				
68-866J		FASTENER,SEAL			
FB01-68-866	1				
68-885		FASTENER			
G030-68-885C	16				
00	INT-	FD8 FD9 FE1 BLACK			
69-910A		SUPPORT,FOOT			
FB01-69-697A	1				
76-071		SILENCER,FLOOR			
0208-76-071	1	30CMX30CM			

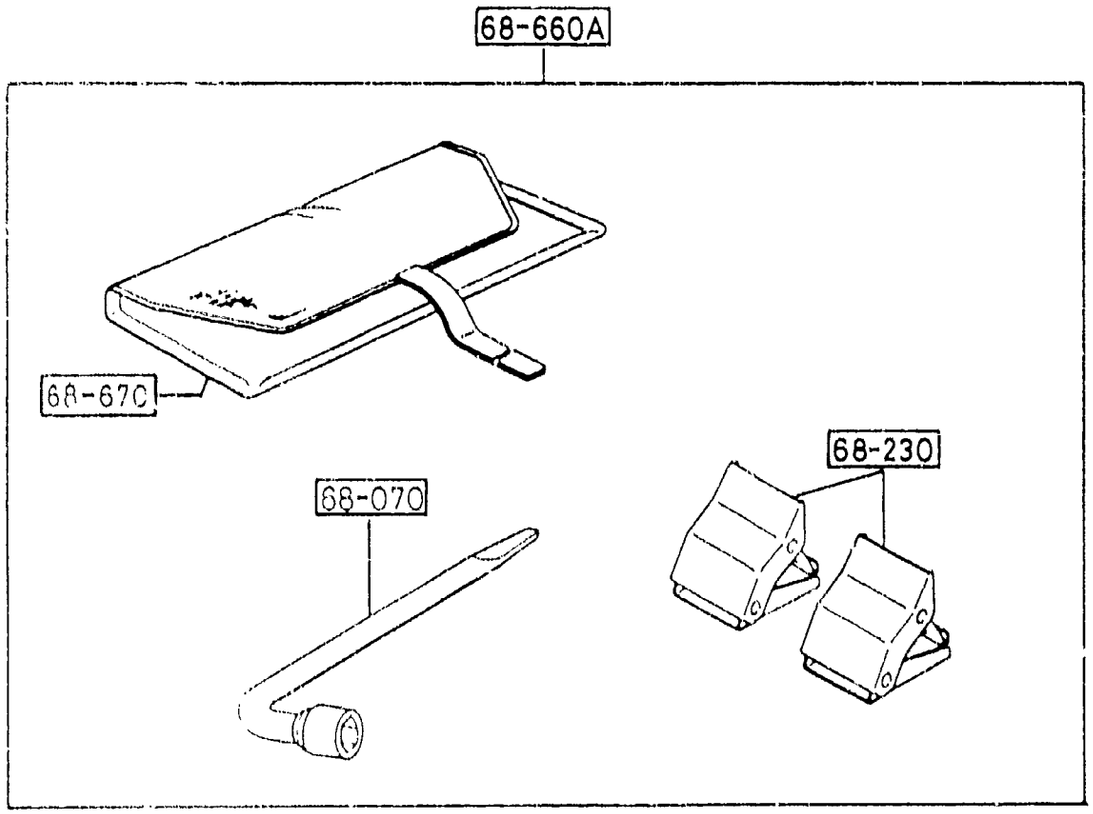

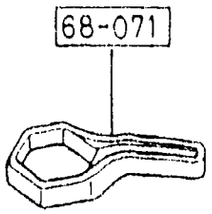

PART NO.	QTY	MODEL/RESTRICTION	MODEL/RESTRICTION	MODEL/RESTRICTION	FROM-TO
68-070		WRENCH,HUB NUT			
0810-68-070E	1				
68-071		WRENCH,WHEEL CAP			
F057-68-071	1				
68-230		STOPPER,WHEEL			
0208-68-230	2				
68-660A		TOOL SET			
FB01-69-650A	1				
68-670		BAG,TOOL			
FB01-69-670A	1				

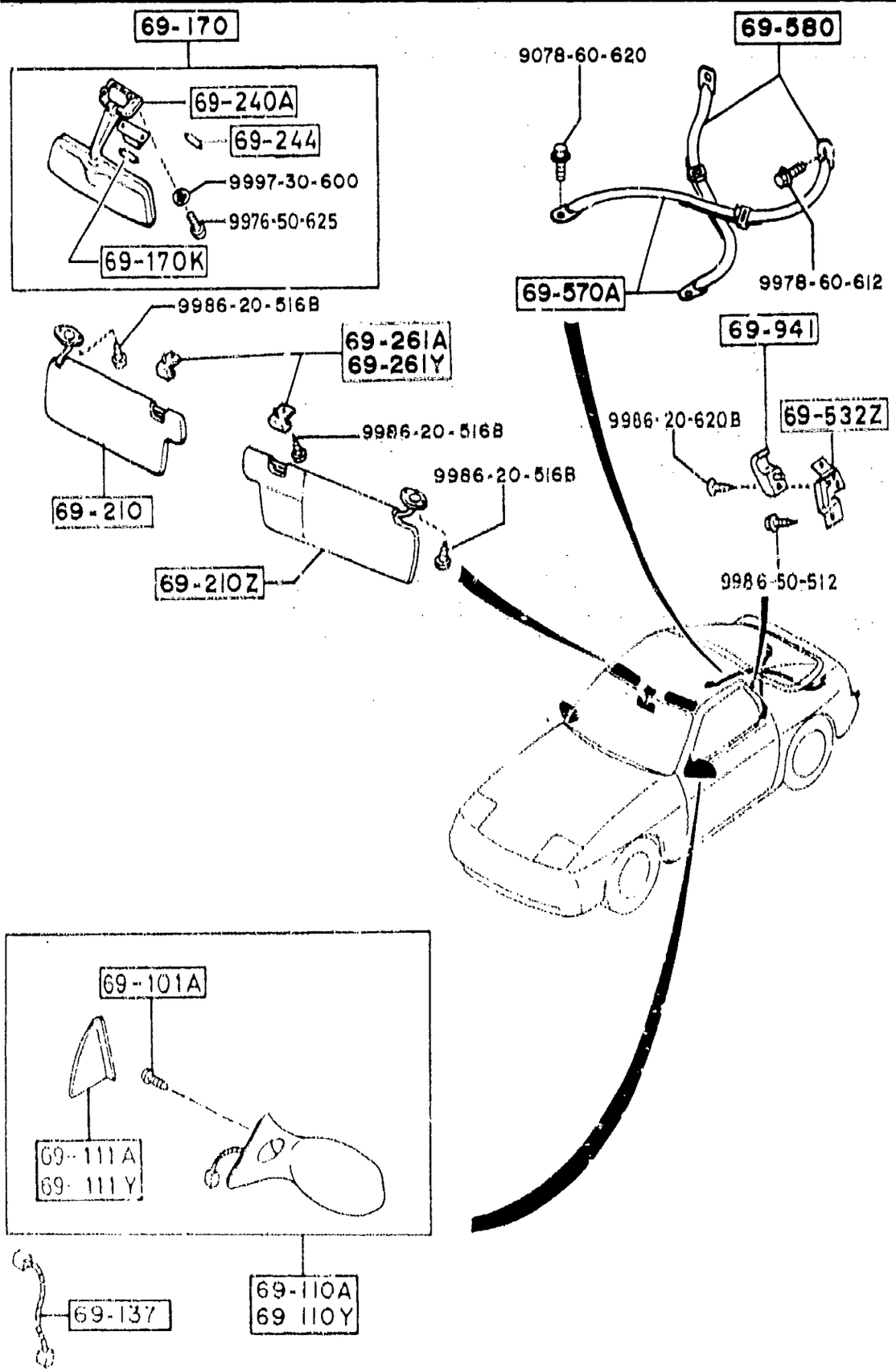

PART NO.	QTY	MODEL/RESTRICTION	MODEL/RESTRICTION	MODEL/RESTRICTION	FROM-TO
69-101A		SCREW,DOOR MIRROR			
G032-69-126	6	ICHIKO			
69-110A		MIRROR(R),DOOR			
FC01-69-110	1				
PZ	EXT-	PZ BRILLIANT BLACK			
SQ	EXT-	SQ BLAZE RED			
UC	EXT-	UC CRYSTAL WHITE			
5N	EXT-	5N BRAVE BLUE MC			
69-110Y		MIRROR(L),DOOR			
FC01-69-170	1				
PZ	EXT-	PZ BRILLIANT BLACK			
SQ	EXT-	SQ BLAZE RED			
UC	EXT-	UC CRYSTAL WHITE			
5N	EXT-	5N BRAVE BLUE MC			
69-111A		GARNISH(R),SAIL-IN.			
F045-69-112A	1				
69-111Y		GARNISH(L),SAIL-IN.			
F045-69-172A	1				
69-137		WIRE,REMOCON MIRROR			
F045-69-108A	2				
69-170		MIRROR,INTERIOR			
FB35-69-220F	1				
00	INT-	FC8 FD9 FE0 BLACK			
69-170K		BULB,INTERIOR MIRROR			
99700-5100	1	12V 10W			
69-210		SUN VISOR(R)			
FC02-69-270	1	(W/O SUN-RF)			
02	INT-	FD8 BLACK			
48	INT-	FD9 BLUE			

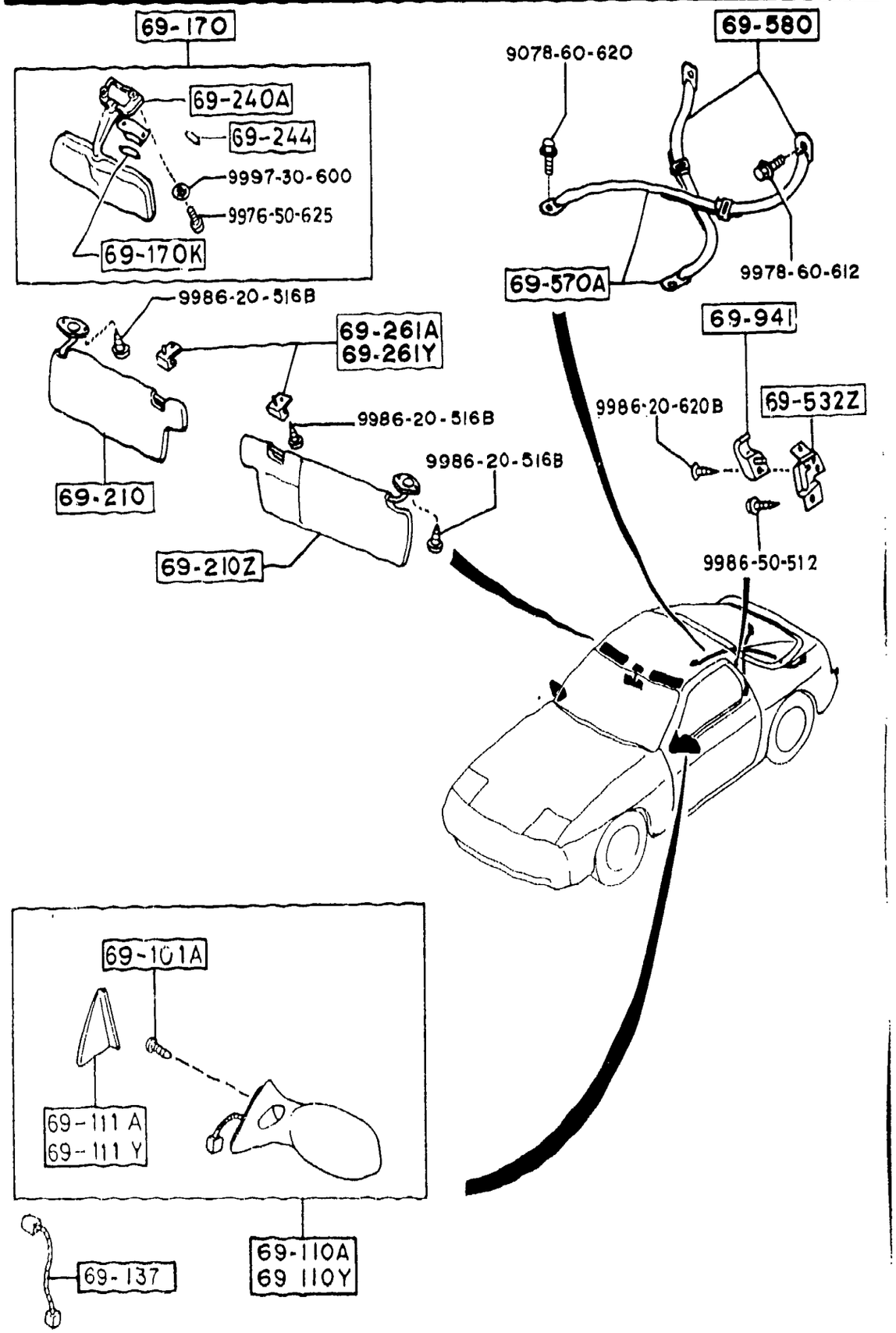

PART NO.	QTY	MODEL/RESTRICTION	MODEL/RESTRICTION	MODEL/RESTRICTION	FROM-TO
CONT'D					
FC04-69-270	1	(SUNROOF)			
02	INT-	FD8 BLACK			
48	INT-	FD9 BLUE			
+---------+					
| 69-210Z |		SUN VISOR(L)			
+---------+					
FC01-69-320	1	(W/O SUN-RF)			
02	INT-	FD8 BLACK			
48	INT-	FD9 BLUE			
FC03-69-320	1	(SUNROOF)			
02	INT-	FD8 BLACK			
48	INT-	FD9 BLUE			
+---------+					
| 69-240A |		BASE, INTERIOR MIRROR			
+---------+					
FB10-69-240	1				
+---------+					
| 69-244 |		PIN, INTERIOR MIRROR			
+---------+					
FB10-69-244	2				
+---------+					
| 69-261A |		ADAPTER(R), CTR-SUN V ISOR			
+---------+					
FB01-69-261	1	(W/O SUN-RF)			
02	INT-	FD8 FE1 BLACK			
48	INT-	FD9 BLUE			
FB03-69-261	1	(SUNROOF)			
02	INT-	FD8 FE1 BLACK			
48	INT-	FD9 BLUE			
+---------+					
| 69-261Y |		ADAPTER(L), CTR-SUN V ISOR			
+---------+					
FB01-69-262	1	(W/O SUN-RF)			
02	INT-	FD8 FE1 BLACK			
48	INT-	FD9 BLUE			
FB03-69-262	1	(SUNROOF)			
02	INT-	FD8 FE1 BLACK			
48	INT-	FD9 BLUE			
+---------+					
| 69-532Z |		BRKT(L), COAT HANGER			
+---------+					
FC01-69-542	1				

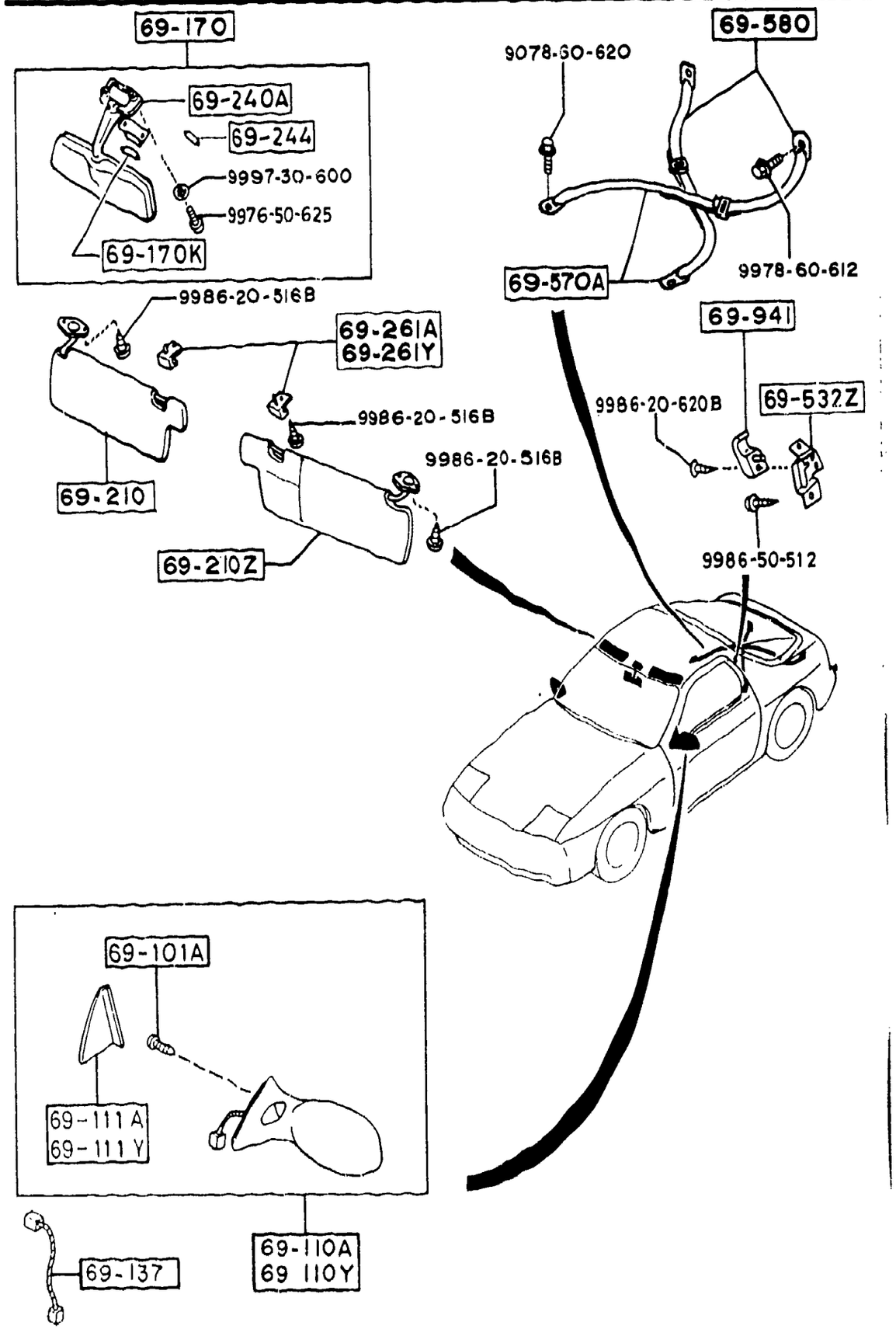

PART NO.	QTY	MODEL/RESTRICTION	MODEL/RESTRICTION	MODEL/RESTRICTION	FROM-TO
69-570A		STRAP'A',CARGOROOM			
FA54-69-571	2	(SUNROOF)			
00	INT-	FD8 BLACK			
48	INT-	FD9 BLUE			
69-580		STRAP'B',CARGOROOM			
FA54-69-572	2	(SUNROOF)			
00	INT-	FD8 BLACK			
48	INT-	FD9 BLUE			
69-941		HANGER,COAT			
FB01-69-531	1				
02	INT-	FD8 FE1 BLACK			
48	INT-	FD9 BLUE			

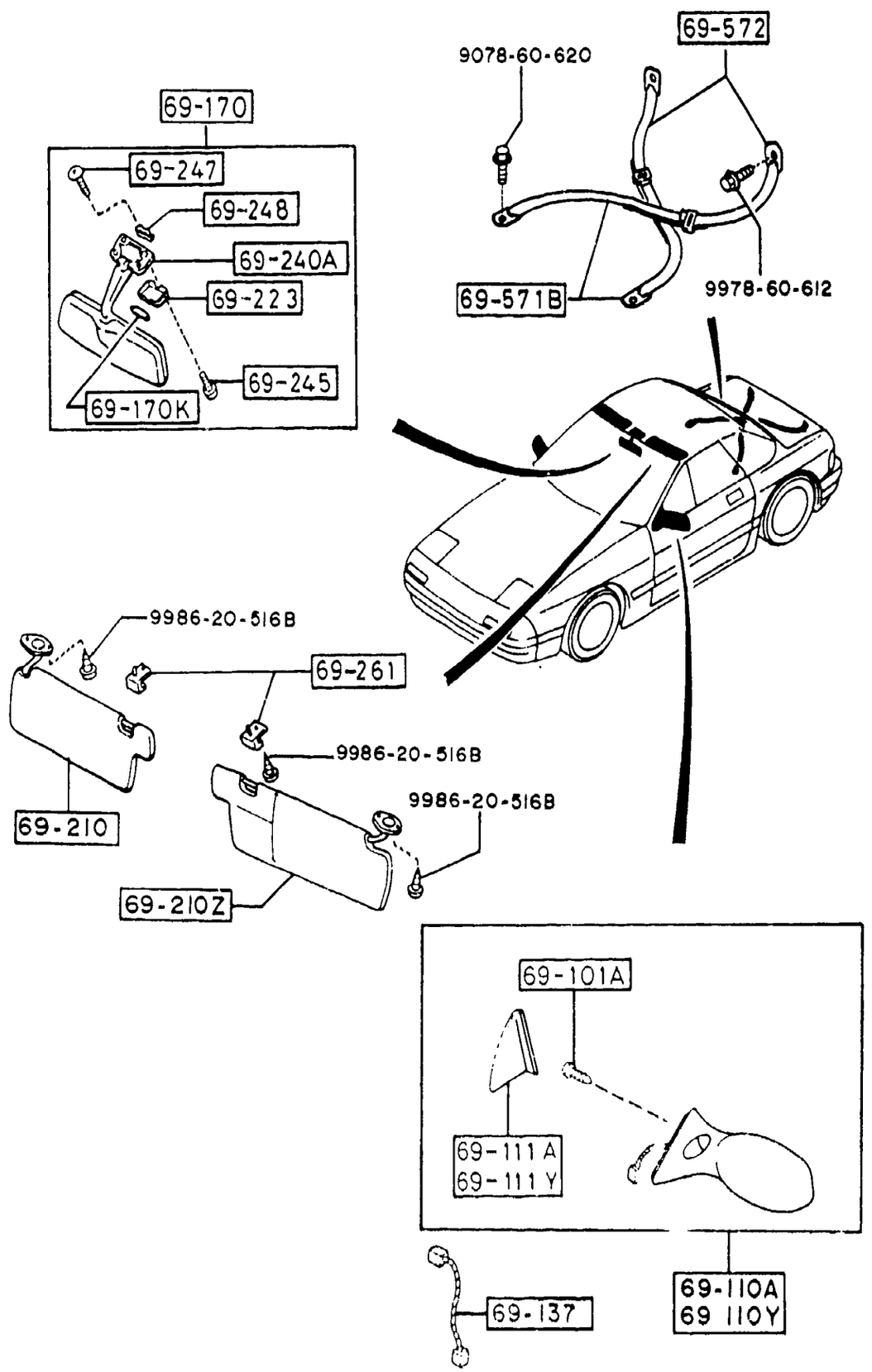

PART NO.	QTY	MODEL/RESTRICTION	MODEL/RESTRICTION	MODEL/RESTRICTION	FROM-TO
69-101A		SCREW,DOOR MIRROR			
G032-69-126	6	ICHIKO			
69-110A		MIRROR(R),DOOR			
FC01-69-110	1				
PZ	EXT-	PZ BRILLIANT BLACK			
SQ	EXT-	SQ BLAZE RED			
UC	EXT-	UC CRYSTAL WHITE			
5N	EXT-	5N BRAVE BLUE MC			
69-110Y		MIRROR(L),DOOR			
FC01-69-170	1				
PZ	EXT-	PZ BRILLIANT BLACK			
SQ	EXT-	SQ BLAZE RED			
UC	EXT-	UC CRYSTAL WHITE			
5N	EXT-	5N BRAVE BLUE MC			
69-111A		GARNISH(R),SAIL-IN.			
F045-69-112A	1				
69-111Y		GARNISH(L),SAIL-IN.			
F045-69-172A	1				
69-137		WIRE,REMOCON. MIRROR			
F045-69-108A	2				
69-170		MIRROR,INTERIOR			
FB68-69-220B	1				
02	INT-	FD8 FE1 BLACK			
48	INT-	FD9 BLUE			
69-170K		BULB,INTERIOR MIRROR			
99700-5100	1	12V 10W			
69-210		SUN VISOR(R)			
FB67-69-270A	1				
02	INT-	FD8 FE1 BLACK			

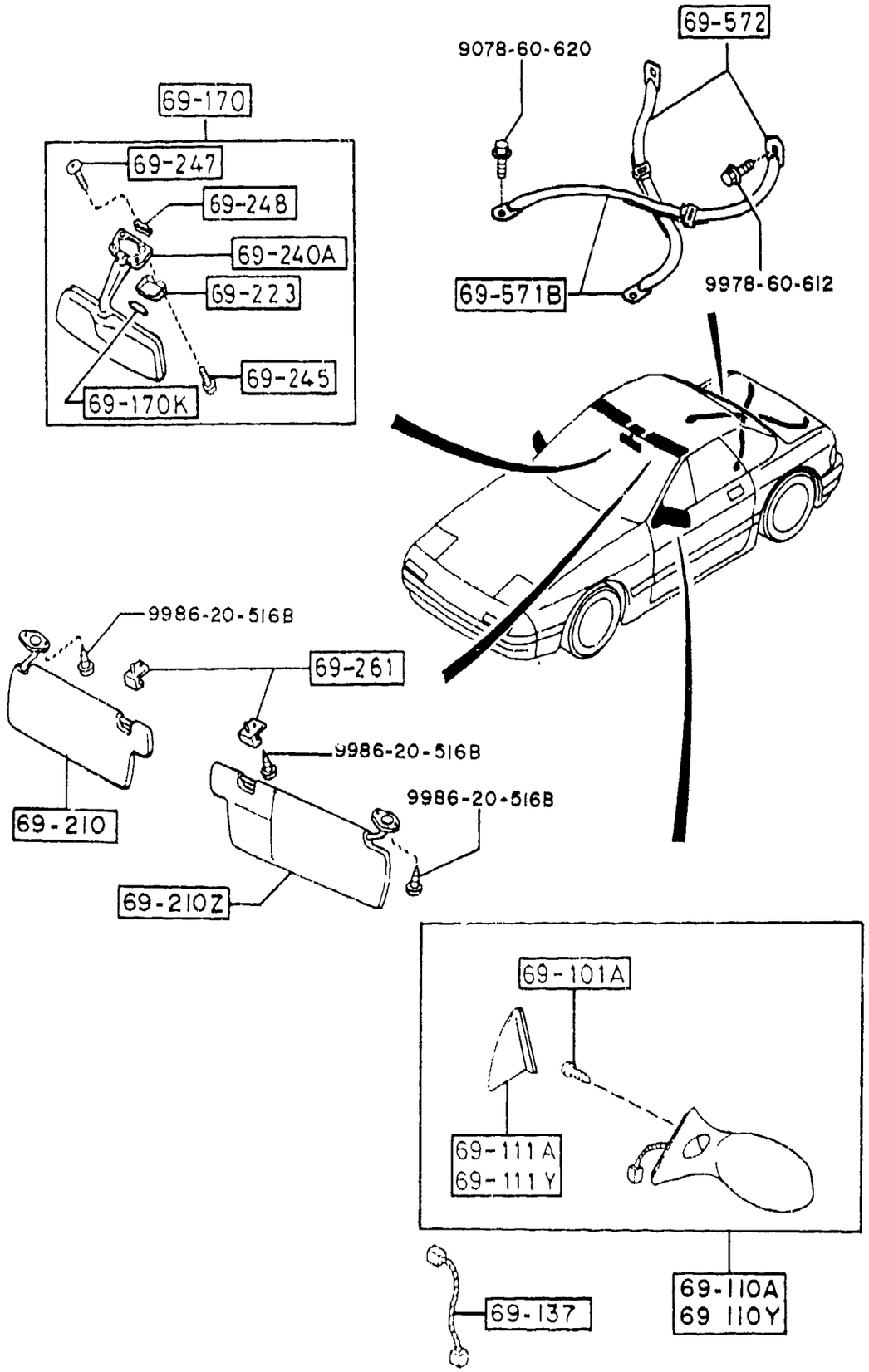

6900A -2 ✱ VISORS,ASSIST HANDLES & MIRRORS
(CONVERTIBLE)

PART NO.	QTY	MODEL/RESTRICTION	MODEL/RESTRICTION	MODEL/RESTRICTION	FROM-TO
CONT'D					
48	INT-	FD9 BLUE			
69-210Z		SUN VISOR(L)			
FC66-69-320A	1				
02	INT-	FD8 FE1 BLACK			
48	INT-	FD9 BLUE			
69-223		LENS,INTERIOR LAMP			
FB67-69-233	1				
69-240A		BASE,INTERIOR MIRROR			
FB67-69-240	1				
02	INT-	FD8 FE1 BLACK			
48	INT-	FD9 BLUE			
69-245		SCREW,INTEROR MIRROR			
FB67-69-245	2				
69-247		HOLDER,PIN			
FB67-69-247	1				
69-248		SPRING,INTERIOR MIRROR			
FB67-69-248	1				
69-261		ADAPTER,SUN VISOR			
H260-69-261	2				
02	INT-	FD8 FE1 BLACK			
48	INT-	FD9 BLUE			
69-571B		STRAP'A',L/CPMT			
FB67-69-571	2				
69-572		STRAP'B',L/CPMT			
FB67-69-572	2				

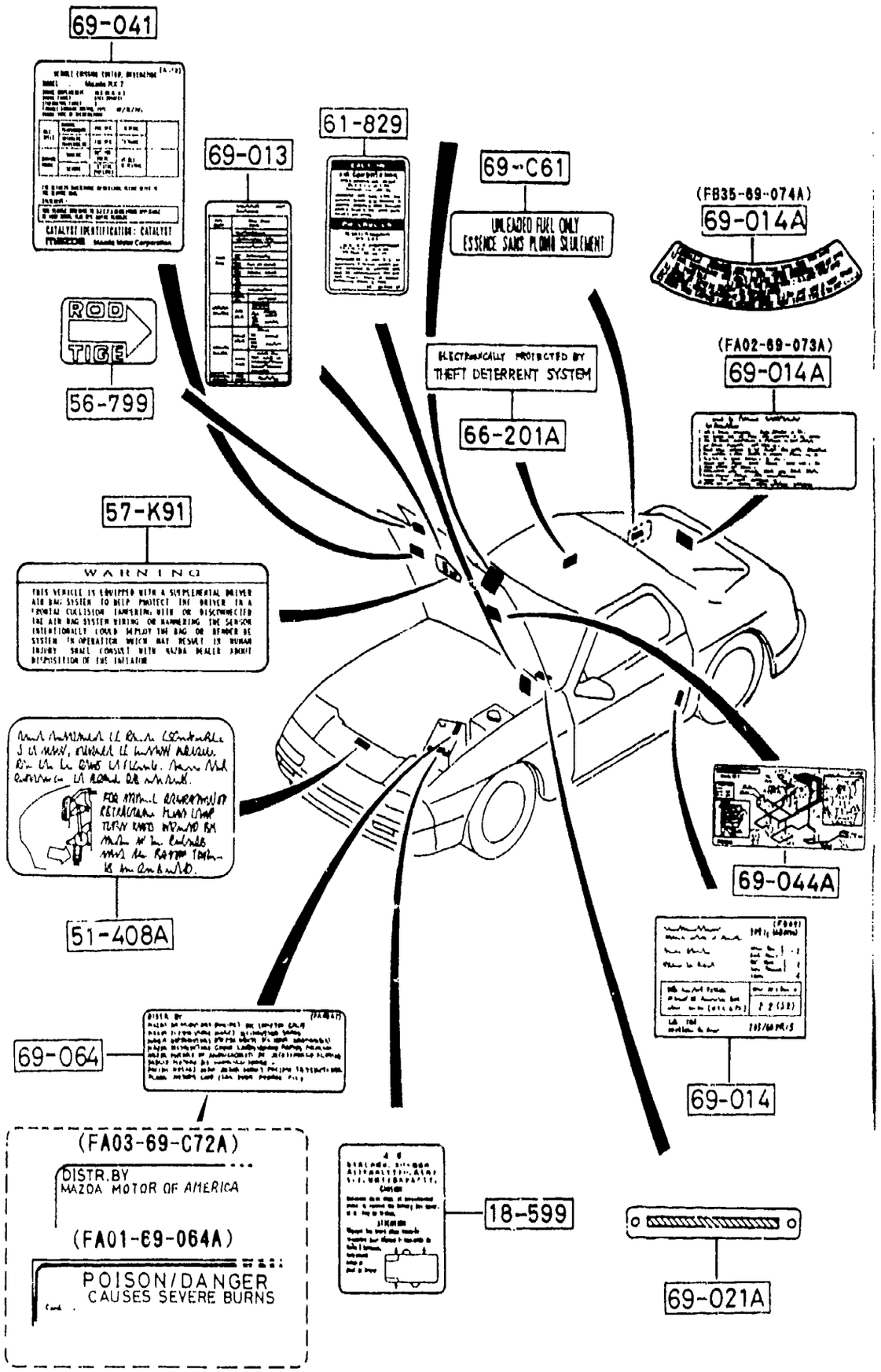

PART NO.	QTY	MODEL/RESTRICTION	MODEL/RESTRICTION	MODEL/RESTRICTION	FROM-TO
18-599		LABEL,CAUTION-BATTERY BOX			
N318-18-599	1	(75D26L MF BATTERY)			
51-408A		LABEL,CAUTION-RETRACTABLE			
FB34-51-408	1				
56-799		LABEL,BONNET STAY			
UB39-56-799	1				
57-K91		LABEL'A',CAUTION-A/B			
NA01-57-K91	1	(CONVERTIBLE)			
61-829		LABEL,CAUTION			
FB01-61-439B	1	(W/AIR CON.)			
*UE38-61-439	1	(A) (OPTION)			
66-201A		LABEL,BURGLAR ALARM			
FB01-66-201	1				
69-C61		LABEL,UNLEADED FUEL			
UB40-69-C61	1				
69-013		LABEL,OIL			
FB01-69-D21A	1				-1601
AN(FB01-69-D21B)					
FB01-69-D21B	1				1601-
69-014		LABEL,TIRE			
FB05-69-014A	1	((CONVERTIBLE))('91 MODEL))			
FC01-69-014A	1	((CONVERTIBLE))('92 MODEL)) ((CPE))(W/O TURBO))			
FC17-69-014A	1	((CPE))(TURBO))			
69-014A		LABEL,TEMPORARY TIRE			
FA02-69-073A	1	ENGLISH (TURBO)			
FB35-69-074A	1	ENGLISH (W/O TURBO)			

1601 FC3***-907848

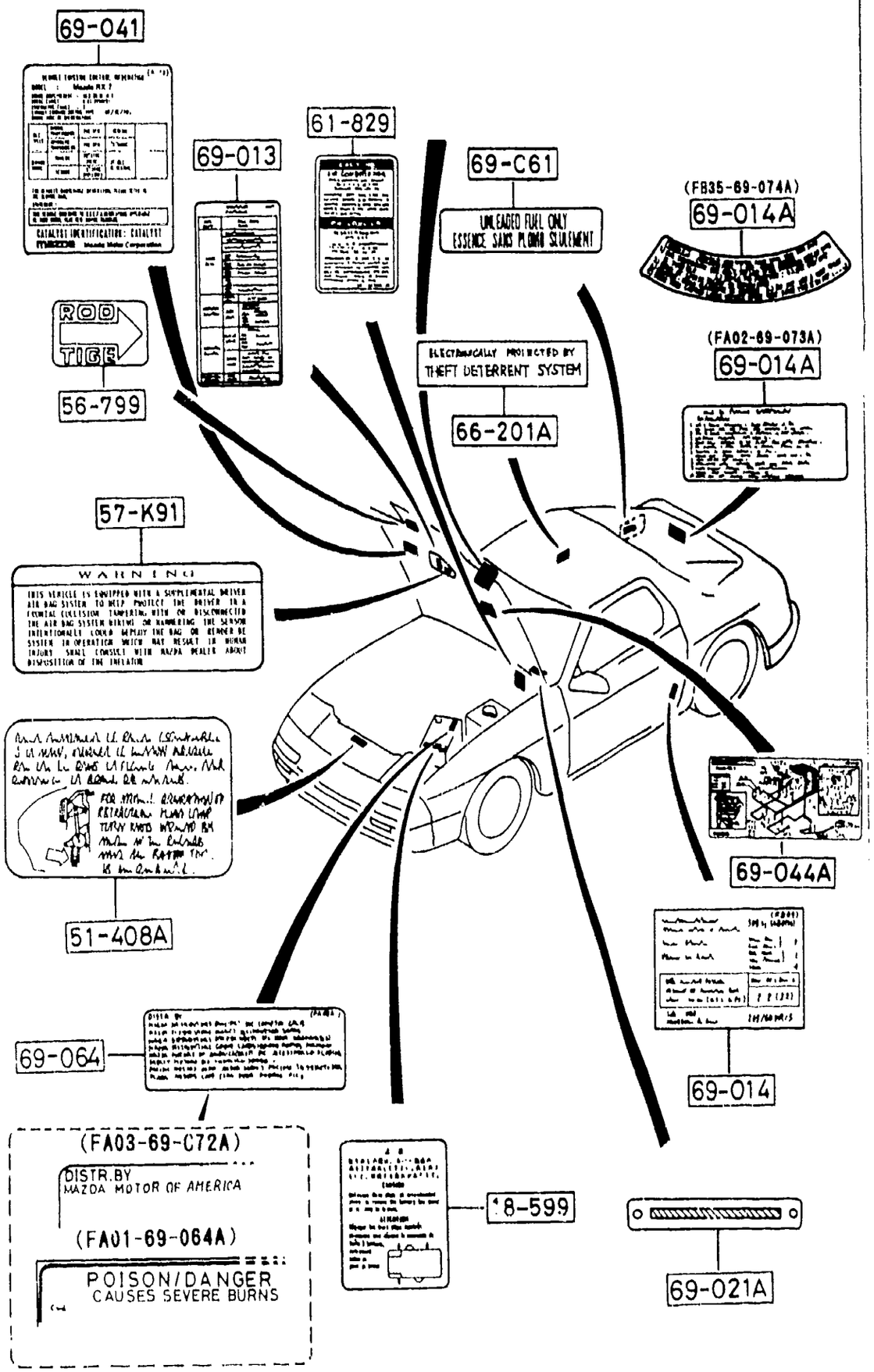

PART NO.	QTY	MODEL/RESTRICTION	MODEL/RESTRICTION	MODEL/RESTRICTION	FROM-TO
69-021A		PLATE,CAUTION			
GA02-69-068	1	(CPE)			
NA01-69-068 A (NA01-69-068A)	1				-0B01
NA01-69-068A	1	(CONVERTIBLE)			0B01-
69-041		LABEL,EMISSION			
N3B1-69-036	1	(W/EM LABEL-FED.) ((CONVERTIBLE)>('92 MODEL))			
N3B2-69-036A	1	(W/EM LABEL-CALIF.) ((CONVERTIBLE)>('92 MODEL))			
N350-69-036B	1	(W/EM LABEL-FED.) ((CPE)>(W/O TURBO))			
N350-69-036B	1	(W/EM LABEL-FED.) ((CONVERTIBLE)>('91 MODEL))			
N351-69-036B	1	(W/EM LABEL-CALIF.) ((CPE)>(W/O TURBO))			
N351-69-036B	1	(W/EM LABEL-CALIF.) ((CONVERTIBLE)>('91 MODEL))			
N370-69-036B	1	(W/EM LABEL-FED.) ((CPE)>(TURBO))			
N371-69-036B	1	(W/EM LABEL-CALIF.) ((CPE)>(TURBO))			
69-044A		LABEL,VAC.DIAPHRAGM			
N350-69-044B	1	(W/O TURBO)			
N370-69-044B	1	(TURBO)			
69-064		LABEL,BATTERY			
FA03-69-C72A	1				
FA01-69-064A	1				

0B01 FC3***-903509

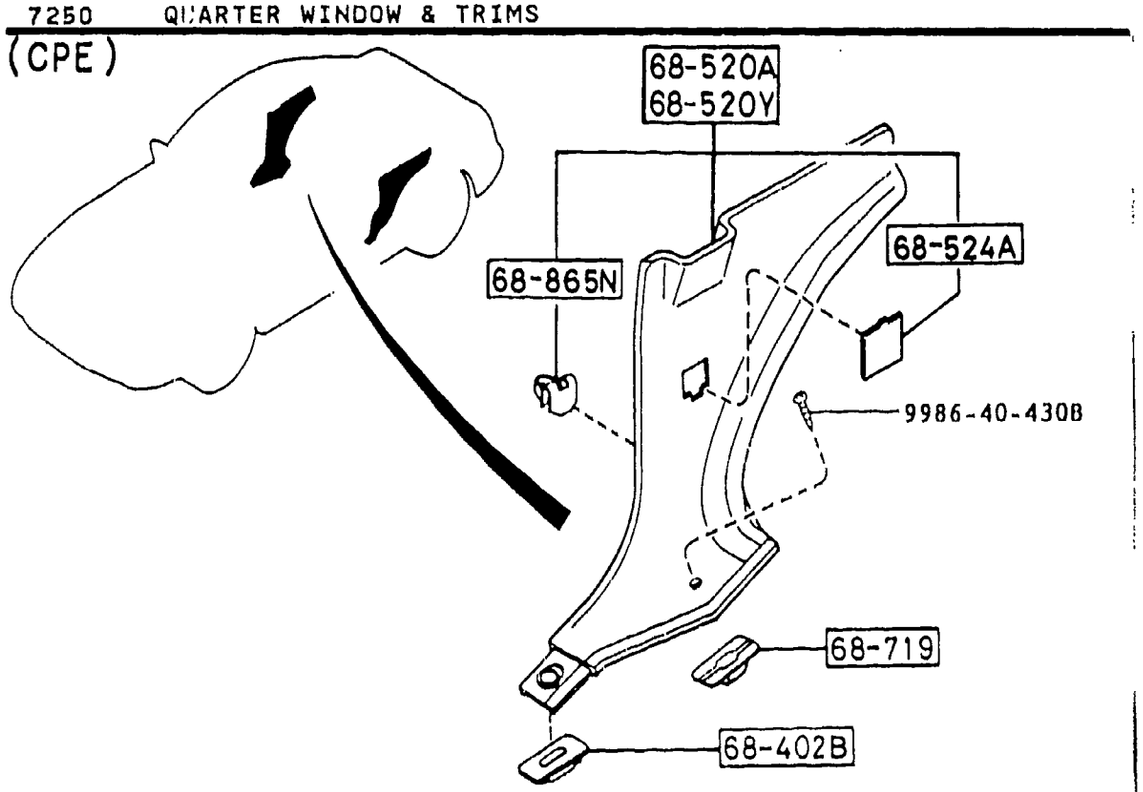

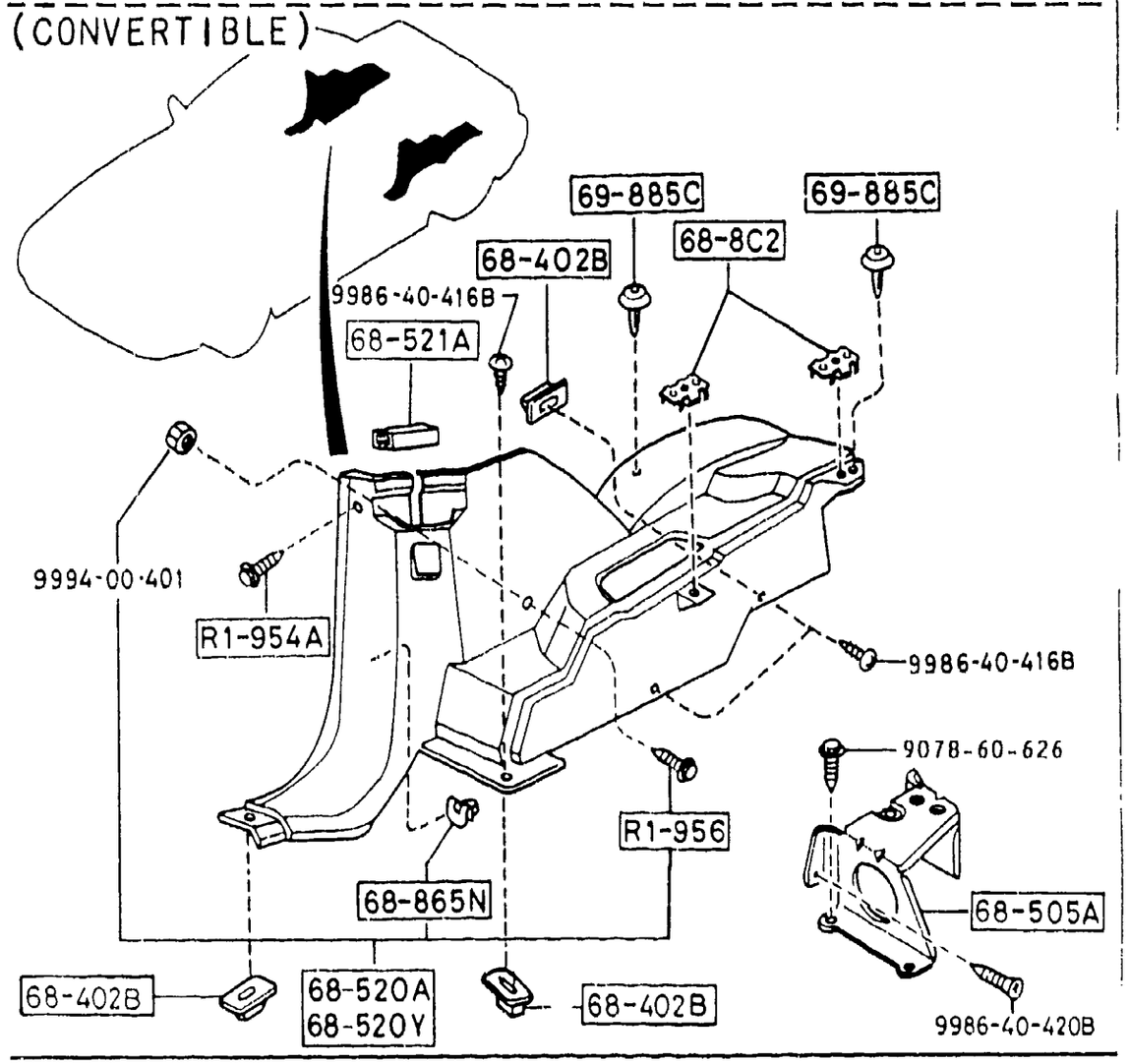

AUFA03

PART NO.	QTY	MODEL/RESTRICTION	MODEL/RESTRICTION	MODEL/RESTRICTION	FROM-TO
R1-954A		HOOK,SCREW-QTR TRIM			
FB67-R1-954A	2	(CONVERTIBLE)			
R1-956		HOOK,SCREW-QTR TRIM			
FB67-R1-956A	2	(CONVERTIBLE)			
68-402B		GROMMET,SCREW			
FA54-68-719B	2	(CPE)			
FA54-68-719B	8	(CONVERTIBLE)			
68-505A		BRACKET,QUARTER TRIM			
FB67-68-505B	1	(CONVERTIBLE)			
68-520A		TRIM(R),QUARTER			
FB67-68-520E	1	(CONVERTIBLE)			
02	INT-	FD8 FE1 BLACK			
48	INT-	FD9 BLUE			
FC01-68-520A	1	(CPE)			
02	INT-	FD8 FE1 BLACK			
48	INT-	FD9 BLUE			
68-520Y		TRIM(L),QUARTER			
FB67-68-550E	1	(CONVERTIBLE)			
02	INT-	FD8 FE1 BLACK			
48	INT-	FD9 BLUE			
FC01-68-550A	1	(CPE)			
02	INT-	FD8 FE1 BLACK			
48	INT-	FD9 BLUE			
68-521A		CLIP,QUARTER TRIM			
FB67-68-523	2	(CONVERTIBLE)			
68-524A		COVER,HOLE-QTR TRIM			
FC01-68-524	2	(CPE)			
02	INT-	FD8 FE1 BLACK			
48	INT-	FD9 BLUE			
68-719		GROMMET,SCREW			

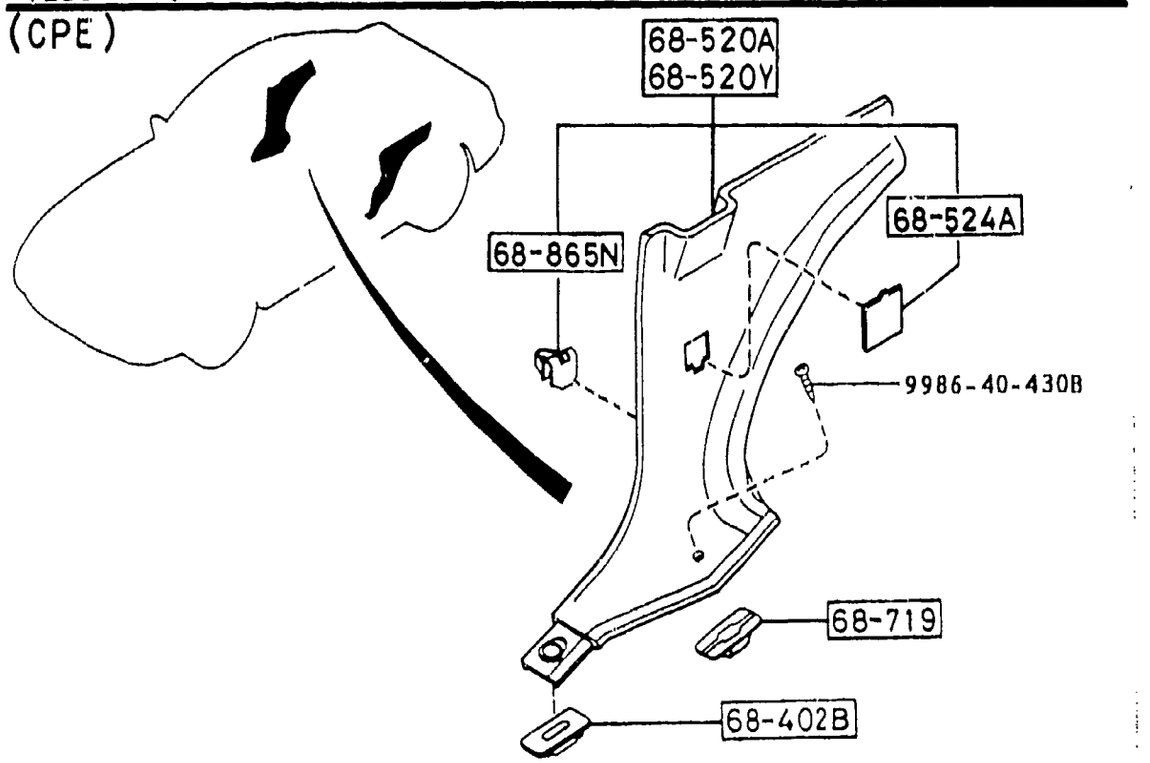

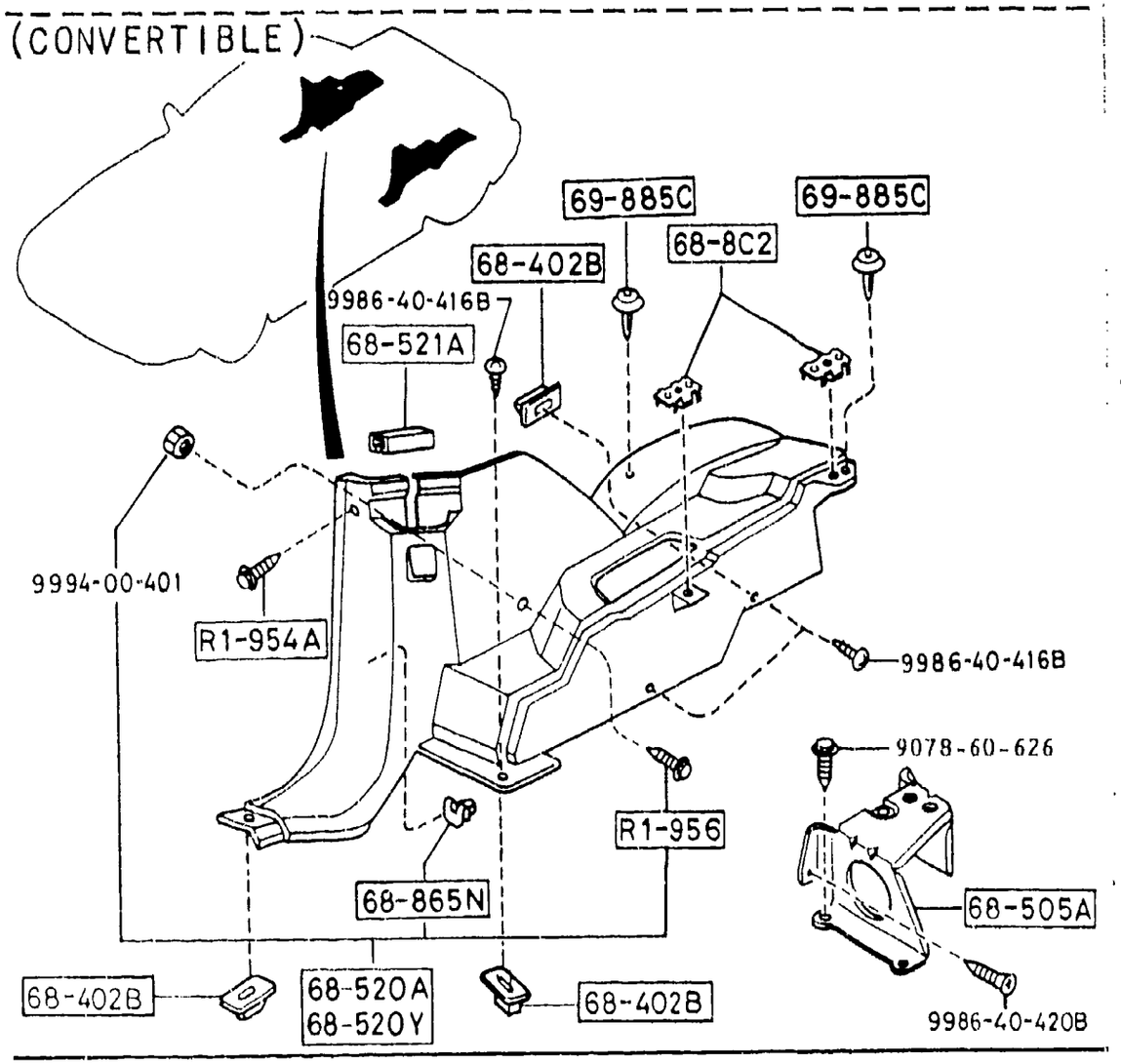

PART NO.	QTY	MODEL/RESTRICTION	MODEL/RESTRICTION	MODEL/RESTRICTION	FROM-TO
CONT'D					
FB01-68-719	2	(CPE)			
68-8C2		NUT,EXPANSION			
FB67-68-8C2	4	(CONVERTIBLE)			
68-865N		CLIP,TRIM			
H002-68-865	6	(CPE)			
*H002-68-865	14	(CONVERTIBLE)			
69-885C		FASTENER			
UB54-68-885	4	(CONVERTIBLE)			
00	INT-	FD8 FD9 FE1 BLACK			
48	INT-	FD9 BLUE			

7800 -1 SPOILERS & RELATED PARTS

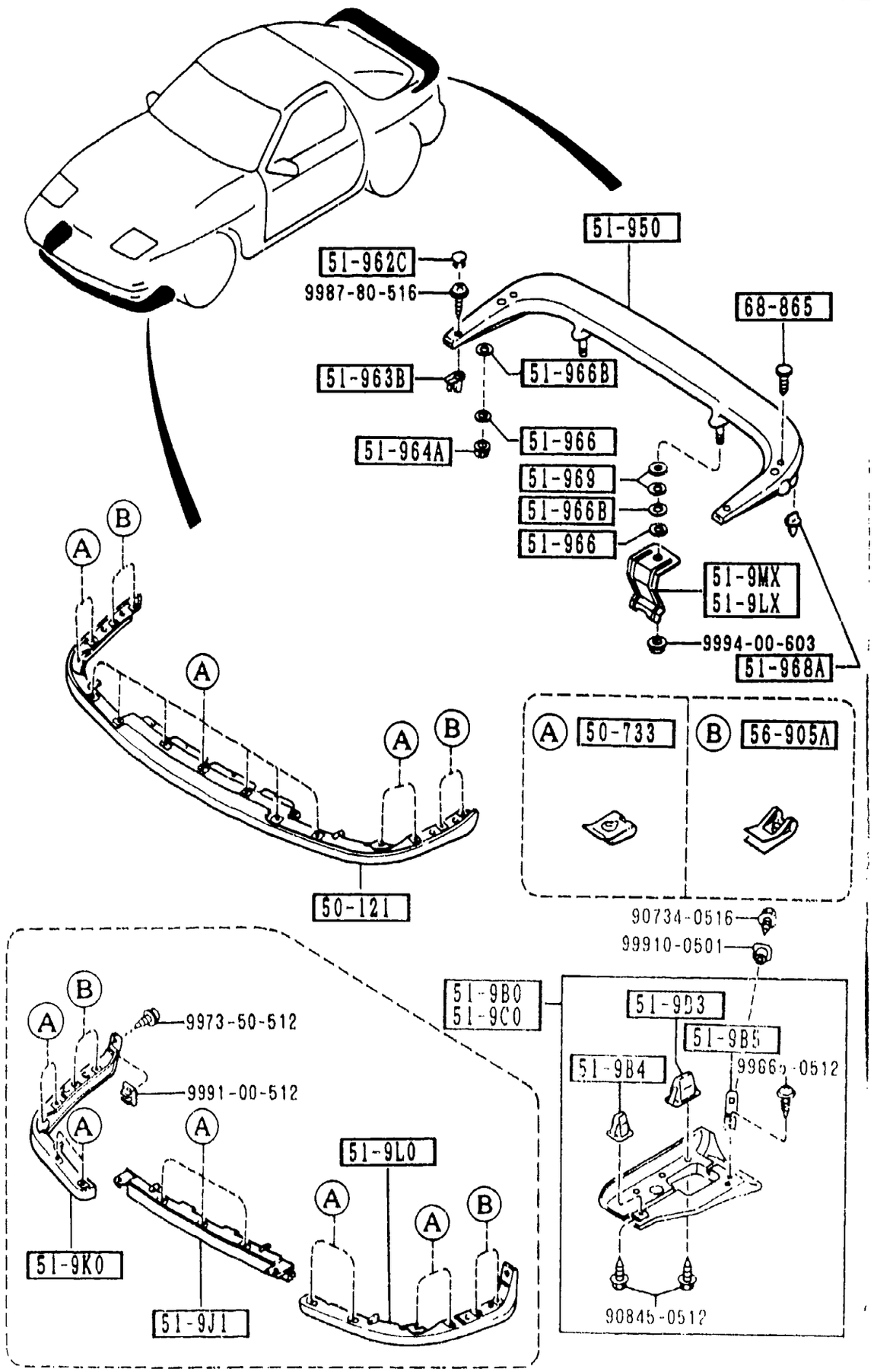

PART NO.	QTY	MODEL/RESTRICTION	MODEL/RESTRICTION	MODEL/RESTRICTION	FROM-TO
50-121		DAM,AIR-SKIRT			
FC17-51-9H0A	1	(TURBO)			
PZ	EXT-	PZ BRILLIANT BLACK			
SQ	EXT-	SQ BLAZE RED			
UC	EXT-	UC CRYSTAL WHITE			
5N	EXT-	5N BRAVE BLUE MC			
50-733		NUT,SPRING-AIR DAM SKIRT			
FB01-50-733	11				
51-9B0		SPOILER(R),SIDE			
FB01-51-9B0A	1	('92 MODEL)			
51-9B3		GROMMET,SCREW-S.SPLR 'C'			
FB01-51-9B3	6	('92 MODEL)			
51-9B4		GROMMET,SCREW-S.SPLR 'A'			
FB01-51-9B4	2	('92 MODEL)			
51-9B5		GROMMET,SCREW-S.SPLR 'B'			
FB01-51-9B5	2	('92 MODEL)			
51-9C0		SPOILER(L),SIDE			
FB01-51-9C0A	1	('92 MODEL)			
51-9J1		DAM(C),AIR-SKIRT			
FC01-51-9J1A	1				
51-9K0		SKIRT(R),FRONT AIR DAM			
FC01-51-9K1A	1				
51-9LX		STIFFENER(L),REAR SPOILER			
FB02-51-9LXB	1				
51-9L0		SKIRT(L),FRONT AIR DAM			
FC01-51-9L1A	1				
51-9MX		STIFFENER(R),REAR SPOILER			
FB02-51-9MXB	1				

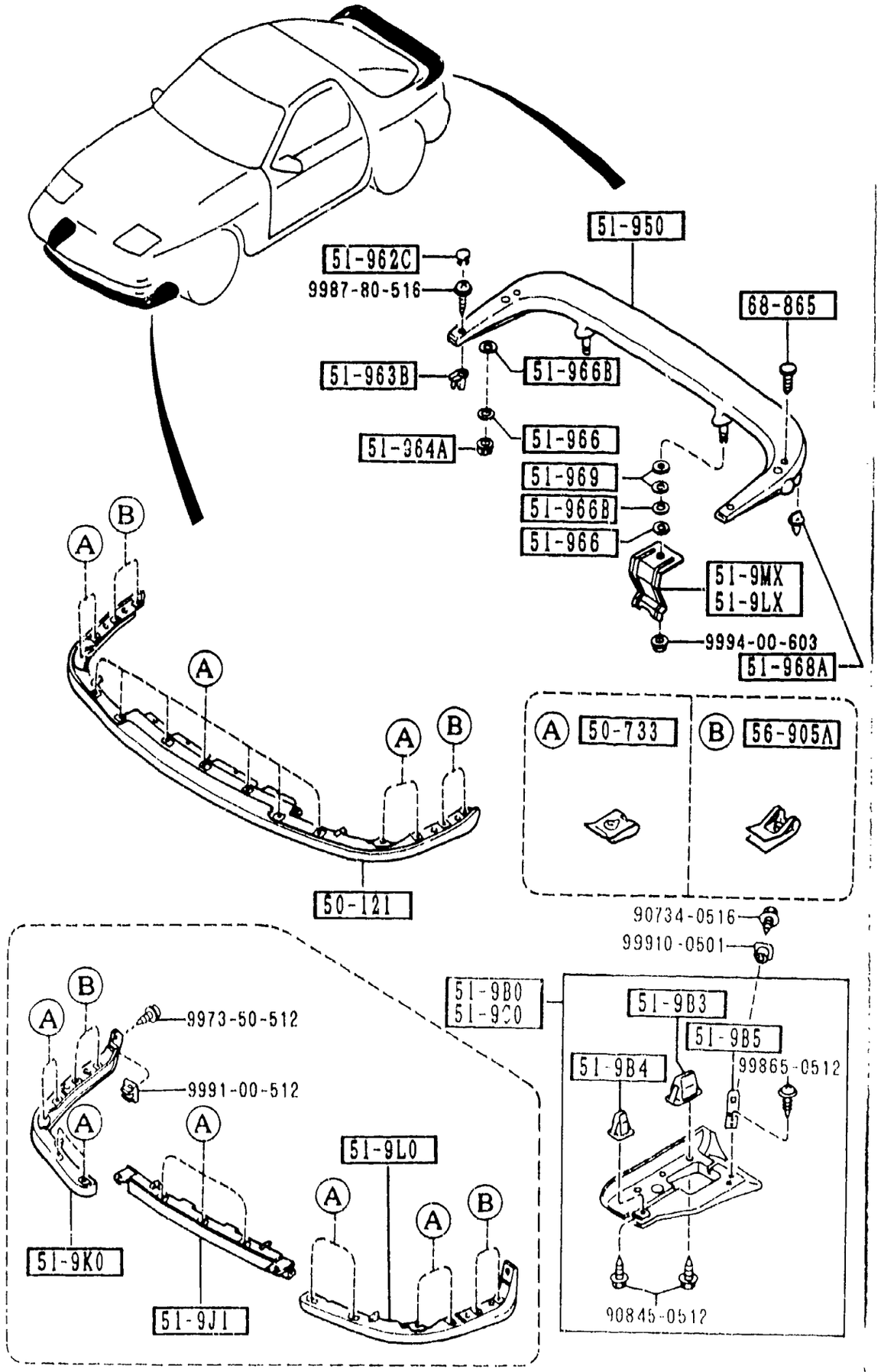

PART NO.	QTY	MODEL/RESTRICTION	MODEL/RESTRICTION	MODEL/RESTRICTION	FROM-TO
51-950		SPOILER,REAR			
FC17-51-960A	1				
PZ	EXT-	PZ BRILLIANT BLACK			
SQ	EXT-	SQ BLAZE RED			
UC	EXT-	UC CRYSTAL WHITE			
5N	EXT-	5N BRAVE BLUE MC			
51-962C		CAP,REAR SPOILER			
FB03-51-962	2				
PZ	EXT-	PZ BRILLIANT BLACK			
SQ	EXT-	SQ BLAZE RED			
UC	EXT-	UC CRYSTAL WHITE			
5N	EXT-	5N BRAVE BLUE MC			
51-963B		GROMMET,SCREW-REAR SPOILER			
FB02-51-963A	2				
51-964A		NUT,CAP-REAR SPOILER			
FB02-51-964A	2				
51-966		PROTECTOR			
FB01-51-966B	4				
51-966B		GASKET,SPOILER			
FB02-51-966	4				
51-968A		CLIP			
FC17-51-968	2				
51-969		PROTECTOR,RR SPOILER -CTR			
FC17-51-969	4				
56-905A		NUT,SPRING			
W023-60-122	4				
68-865		FASTENER			
G045-68-865	2				
00	INT-	FD8 FD9 BLACK			

R1-000

FB67-R1-03X	4-H4
FB67-R1-03Y	4-H4
FB67-R1-100	4-H4
FB67-R1-14X	4-H4
FB67-R1-14Y	4-H4
FB67-R1-146A	4-H4
FB67-R1-147A	4-H4
FB67-R1-148A	4-H4
FB67-R1-149	4-H4
FB67-R1-15X	4-H4
FB67-R1-16X	4-H4
FB67-R1-17X	4-H4
FCZ3-R1-210	4-H4
FB67-R1-212C02	4-I4
FB67-R1-212C48	4-I4
FB67-R1-213	4-I4
FB67-R1-214A	4-I4
FC33-R1-217	4-H4
FB67-R1-218	4-I4
FB67-R1-219	4-I4
FB67-R1-221	4-I4
FB67-R1-222	4-L4
FB67-R1-231	4-I4
FB67-R1-232	4-I4
FB67-R1-233	4-I4
FB67-R1-234	4-I4
FB67-R1-235	4-I4
FB67-R1-236	4-I4
FB67-R1-237A	4-I4
FB67-R1-251	4-J4
FB67-R1-252	4-J4
FB67-R1-421A	4-J4
FB67-R1-421B	4-J4
FB67-R1-5A1	4-J4
FB67-R1-5A2	4-J4
FB67-R1-510D	4-J4
FB67-R1-520B	4-J4
FB67-R1-711E	4-J4
FB67-R1-711F	4-J4
FB67-R1-721E	4-J4
FB67-R1-810H	4-J4
FB67-R1-860D	4-J4
FB67-R1-870D	4-K4
FB67-R1-881C	4-K4
FB67-R1-882C	4-K4
FB67-R1-9A3A	4-K4
FB67-R1-9B3A	4-K4
FB67-R1-91YC	4-K4
FB67-R1-91ZC	4-K4
FB67-R1-910H02	4-K4
FB67-R1-910H48	4-K4
FB67-R1-911A	4-K4
FB67-R1-912A	4-K4
FB67-R1-913A	4-K4
FB67-R1-916	3-M7
FB67-R1-920E	4-K4
FB67-R1-921A02	4-L4
FB67-R1-921A48	4-L4
FB67-R1-926A	4-L4
FB67-R1-930A	4-L4
FB67-R1-940A	4-L4
B235-R1-951C	4-I10
FC54-R1-951B	4-L4
FC54-R1-952B	4-L4
B235-R1-953	4-L4
FB67-R1-954A	3-K13 4-I11
FB67-R1-956A	4-I11
B235-R1-958A	4-L4
NA01-R1-96Z 00	4-L4
FB67-R1-960G02	4-J4
FB67-R1-960G48	4-J4

02-000

N3B1-02-200	1-C3
N3B2-02-200	1-C3
N350-02-200A	1-C3
N351-02-200A	1-C3
N370-02-200A	1-D3
FC02-09-010 02 3-C3	
FC02-09-010 48 3-C3	
FC07-09-010 02 3-C3	
FC07-09-010 48 3-C3	
FC07-09-010A02 3-C3	
FC07-09-010A48 3-C3	
FC66-09-010 02 3-C3	
FC66-09-010 48 3-C3	
FC66-09-010A02 3-C3	
FC66-09-010A48 3-C3	
FC67-09-010 02 3-C3	
FC67-09-010 48 3-C3	
FC67-09-010A02 3-C3	
FC67-09-010A48 3-C3	

09-000

10-000

N326-10-B06	1-E3
	1-G3
N318-10-B10A	1-G3
N350-10-B10A	1-E3
N318-10-B50C	1-G3
N350-10-B50A	1-E3
N326-10-B71A	1-E3
	1-G3
N326-10-B72	1-E3
	1-G3
N350-10-C00A	1-I3
N370-10-C00B	1-L3
N326-10-C15	1-E3
	1-G3
N350-10-C50A	1-I3
N370-10-C50A	1-L3
N350-10-C85	1-I3
	1-L3
N350-10-D00C	1-F3
N370-10-D00C	1-H3
N318-10-D10B	1-H3
N370-10-E00C	1-F3
	1-H3
N350-10-E02	1-F3
	1-H3
N370-10-E10B	1-F3
	1-H3
N350-10-E50A	1-J3
	1-M3
N350-10-E51B	1-J3
	1-M3
N350-10-E56	1-I3
	1-L3
N350-10-E61A	1-J3
	1-M3
N350-10-S60	1-C3
N370-10-S60	1-D3
N326-10-T11	4-N4
0839-10-105	1-E3
	1-G3

11-000

1757-10-111	1-E3
	1-G3
N231-10-173	1-E3
	1-G3
N231-10-174	1-I3
	1-L3
0839-10-203	1-I3
	1-L3
8562-10-205	1-I3
	1-L3
1757-10-206A	1-I3
	1-L3
1757-10-207A	1-I3
	1-L3
1757-10-208	1-I3
	1-L3
N249-10-219	1-I3
	1-L3
8871-10-250A	1-E3
	1-G3
8871-10-252	1-E3
	1-G3
8AFD-10-271	1-C3
8AF5-10-271	1-C3
8AF6-10-271	1-D3
N225-10-305	1-I3
	1-L3
1757-10-309	1-I3
	1-L3
N326-10-323	1-E3
	1-G3
N328-10-400E	1-I3
	1-L3
N225-10-415	1-F3
	1-H3
8562-10-417	1-F3
	1-H3
N332-10-420B	1-H3
N350-10-420	1-F3
N318-10 424	1-H3
N3Y6-10-427	1-J3
	1-M3
N318-10-441	1-G3
N326-10-441	1-E3
N326-10-450B	1-F3
N332-10-450A	1-H3
0839-10-455	1-J3
	1-M3
N326-10-470	4-N4
NF01-10-500	1-M3
N350-10-500A	1-J3
N326-10-502A	1-J3
	1-M3
N386-10-502	1-J3
0820-10-502B	1-F3
	1-H3
N326-10-506	1-J3
	1-M3
0813-10-555A	1-F3
	1-H3
1668-10-556A	1-F3
	1-H3
N318-10-566A	1-M3
N350-10-566	1-J3
N318-10-570B	1-M3
0820-10-605	1-J3
	1-M3
N249-10-619	1-J3
	1-M3
8871-10-631A	1-J3
	1-M3
N231-10-735	4-N4
N225-10-861	1-J3

13-000

N3Y5-11-B10	1-G4
N3Y5-11-B10A	1-G4
N3Y8-11-B10	1-G4
N3Y8-11-B10B	1-G4
N326-11-C00C	1-F4
N351-11-C00	1-F4
N326-11-C02A	1-F4
N326-11-C03A	1-F4
N326-11-C04A	1-F4
N326-11-C06A	1-F4
N3Y1-11-C11	1-G4
N3Y6-11-C11	1-G4
N326-11-C17	1-F4
N326-11-C20A	1-F4
N326-11-C22A	1-F4
N326-11-D00B	1-C4
N327-11-D00B	1-C4
N326-11-D03	1-C4
N326-11-D11	1-C4
N326-11-D15	1-C4
N326-11-D17	1-C4
NF01-11-D51	1-D4
N390-11-D52	1-D4
NF01-11-D53	1-E4
NF01-11-D54	1-D4
NF01-11-D55	1-D4
NF01-11-D56	1-D4
NF01-11-D57	1-D4
NF01-11-D58	1-D4
NF01-11-D59	1-D4
N3A7-11-D61	1-E4
N3A8-11-D61	1-E4
N326-11-D61A	1-E4
N350-11-D61	1-E4
N326-11-D75	1-E4
1011-11-111	1-F4
1202-11-323A	1-F4
0820-11-341	1-F4
8341-11-343	1-F4
N225-11-351	1-F4
1011-11-353A	1-G4
N225-11-361	1-G4
1011-11-363A	1-G4
N3B1-11-400	1-C4
N350-11-400B	1-C4
1881-11-404	1-C4
N390-11-406	1-C4
N350-11-408A	1-C4
0839-11-412	1-C4
N318-11-420B	1-C4
N350-11-500	1-C4
N370-11-500	1-C4
1011-11-501	1-D4
N318-11-502A	1-D4
0839-11-5[illegible]	1-D4
1011-11-5[illegible]	1-D4
0813-11-505B	1-D4
0839-11-506	1-D4
1011-11-507	1-E4
0839-11-508	1-D4
0839-11-509	1-D4
8519-11-517	1-D4
8534-11-518	1-D4
N351-11-521	1-E4
0839-11-531	1-E4
0866-11-702	1-D4
0820-11-705	1-E4
0810-11-711	1-E4

13-000

N350-13-B70	1-H4
N351-13-B70A	1-H4
N350-13-B73	1-H4
N350-13-B80A	1-H4
N351-13-B80A	1-I4
N350-13-B87	1-I4
N350-13-B96	1-I4
N351-13-C60	1-E5
N350-13-C61A	1-E5
N326-13-C80A	1-K4
N350-13-C90	1-G6
	1-K6
N350-13-W6X	1-J5
N351-13-W6X	1-J5
N370-13-W6X	1-M5
N332-13-W60	1-M5
N350-13-W60	1-J5
N351-13-W60	1-J5
N327-13-W61	1-J5
N332-13-W61	1-M5
N326-13-W64	1-J5
N337-13-W64	1-M5
N326-13-W68	1-J5
	1-M5
N326-13-W69	1-J5
	1-M5
N350-13-W7Y	1-J5
N351-13-W7Y	1-J5
N370-13-W7Y	1-M5
N350-13-W70	1-J5
	1-M5
N326-13-W76	1-J5
N350-13-W8Y	1-J5
N351-13-W8Y	1-J5
N370-13-W8Y	1-M5
N350-13-W80	1-J5
N351-13-W80	1-J5
N370-13-W80	1-M5
N326-13-W86	1-J5
N327-13-W86	1-K5
N370-13-W86	1-M5
N326-13-W87	1-K5
	1-M5
N350-13-W89	1-K5
	1-M5
N350-13-W90	1-K5
N351-13-W90	1-K5
N370-13-W90	1-M5
N327-13-ZE1	2-D8
FEH2-13-ZE4	2-D8
BP02-13-ZE5	2-D8
N370-13-ZLY	1-M4
N326-13-Z01	1-G5
	1-I5
N326-13-Z34A	1-G5
	1-H5
N350-13-Z40	1-G5
	1-I5
8871-13-087A	4-D6
N350-13-100A	1-H4
N372-13-100A	1-J4
N350-13-104	1-F5
1010-13-104	1-H4
	1-J4
	1-K5
N3B1-13-111	1-H4
N350-13-111	1-H4
N370-13-111	1-J4
8AF4-13-111	1-C3
8AF5-13-111	1-D3
8AF6-13-111	1-C3
N3B1-13-112	1-H4
N350-13-112	1-H4
N370-13-112	1-J4
8527-13-113	1-J4
N350-13-130A	1-H4
N370-13-130C	1-J4
N3B1-13-135	1-H4
N350-13-135	1-H4
N370-13-140B	1-J4
N326-13-150	1-E5
N351-13-150	1-E5
N370-13-150	1-E5
N371-13-150	1-E5
8574-13-157	1-C5

8574-13-157	2-D10
N326-13-158	1-E5
N225-13-160A	1-H4
N318-13-164A	1-I5
	1-N4
N350-13-164	1-E5
N350-13-165	1-E5
N225-13-173A	1-H4
N225-13-184	1-I4
N225-13-186	1-I4
N225-13-188A	1-I4
N350-13-201	1-F5
	1-H5
N350-13-202	1-G5
	1-I5
1481-13-205C	1-F5
N350-13-210	1-F5
N370-13-210	1-H5
N350-13-214	1-F5
	1-H5
N370-13-220	1-H5
N326-13-221A	1-F5
N350-13-222	1-F5
N352-13-23XA	1-I4
N352-13-23XB	1-I4
N370-13-24X	1-M4
FE05-13-240	1-F5
1481-13-240A	1-G6
	1-K6
1482-13-240A	1-G6
N370-13-245	1-L4
N318-13-246C	1-L4
N350-13-250	1-E5
N370-13-250	1-E5
8574-13-252	1-E5
N236-13-253A	1-G6
	1-K6
8574-13-253	1-E5
N350-13-257	1-E5
N236-13-260A	1-E5
N236-13-265	1-H5
N304-13-283A	1-G6
	1-K6
N350-13-310	1-F5
	1-H5
N350-13-320	1-F5
	1-H5
FE51-13-329	1-F5
	1-H5
2850-13-331	1-C12
N370-13-332	1-L4
N351-13-35ZB	2-D8
N370-13-35ZB	2-D8
N350-13-350	2-D8
N380-13-350B	2-D8
FE51-13-363	1-G5
	1-H5
N236-13-363	1-C5
N318-13-363	1-L4
N326-13-363B	1-G6
	1-K6
N327-13-363	1-F11
N370-13-38XA	1-M4
N370-13-380B	1-M4
N326-13-390B	1-K4
N370-13-390A	1-K4
8574-13-422	1-C5
F267-13-428	1-C5
G601-13-428	1-C5
N318-13-428	1-C5
N326-13-428A	1-C5
N370-13-428	1-C5
N326-13-431B	1-C5
0118-13-431	3-D6
JE39-13-447	3-G13
N326-13-447	1-G6
	1-K6
N350-13-450	1-K4
N370-13-450B	1-K4
N370-13-456	1-K4

N319-13-457B	2-I7
N318-13-461	1-K4
N350-13-461	1-K4
N236-13-483	1-M4
N370-13-491	2-I7
B630-13-496	2-D10
E5A1-13-497A	2-D10
N318-13-498	1-C5
N319-13-530A	1-M4
N370-13-540	1-M4
N318-13-546	1-M4
N370-13-550	1-L4
N318-13-555A	1-L4
N319-13-556A	1-L4
N318-13-557	1-L4
N318-13-56X	1-L4
N236-13-631	1-M4
N236-13-638	1-F7
	1-M4
N3B1-13-645	1-G6
N350-13-645	1-G6
N370-13-645	1-K6
N350-13-650B	1-K5
N351-13-650B	1-K5
N370-13-650B	1-N5
N350-13-660	1-I4
N370-13-660A	1-J4
N350-13-680	1-G6
N370-13-681	1-K6
N370-13-700	1-N4
N370-13-708	1-M4
N370-13-710A	1-N4
N350-13-720	1-H6
N370-13-720A	1-L6
N304-13-724A	1-D6
N370-13-725	1-K6
N304-13-726	1-D6
	1-H6
	1-L6
1480-13-726	1-G5
	1-I5
1480-13-730	1-D6
N318-13-736A	1-L4
SL50-13-736	1-L4
	1-M4
N370-13-74YA	1-N4
N350-13-740	1-H6
N319-13-742	1-L6
N350-13-742	1-H6
N318-13-744A	1-L6
N236-13-746A	1-N4
N319-13-750A	1-K6
N326-13-750A	1-G6
N332-13-752A	1-L6
N350-13-752	1-H6
N326-13-753A	1-G6
	1-K6
N326-13-755	1-G6
N332-13-755A	1-L6
N350-13-760A	1-H6
N304-13-761A	1-L6
N370-13-761A	1-L6
N350-13-762	1-H6
N370-13-762A	1-L6
N370-13-765	1-I5
N350-13-772	1-H6
N370-13-772A	1-L6
N350-13-810	1-D6
N370-13-810	1-D6
N350-13-811	1-E6
N350-13-812	1-D6
N370-13-812	1-D6
N370-13-813A	1-D6
N332-13-814A	2-K7
N370-13-886	1-N4
N326-13-887	1-H6
N350-13-887	1-H6
N370-13-889	1-L6
N350-13-921	1-D6
N370-13-921A	1-D6

1700-13-945A	1-I5	N350-14-602	1-D7	N350-15-141	1-K7			M502-17-265C	1-L9	M501-17-342	1-D14	M513-17-520 00	1-D11
	1-L6		1-G7	N326-15-142	1-L7	**********		M504-17-265A	1-L9		1-I10		1-M10
N326-13-961A	1-C5	N236-14-603B	1-D7	N350-15-15XA	1-M7	* *		R502-17-265A	1-G10	0114-17-351	1-K10	0884-17-530	1-F9
N326-13-970	1-C5		1-G7	N350-15-150	1-M7	* 17-000 *		R503-17-265A	1-G10		1-N10		1-I9
N326-13-971	1-C5	N350-14-604	1-D7	N326-15-151	1-L7	* *		R506-17-265B	1-G10	M501-17-370A	1-F9	M510-17-540	1-F9
N236-13-980A	1-K5		1-G7	N326-15-153	1-M7	**********		R506-17-265C	1-G10	R501-17-371A	1-H9	R505-17-540	1-I9
N304-13-980A	1-K5	N350-14-606	1-D7	N326-15-162A	1-L7			R507-17-265B	1-G10	R501-17-373	1-H9	R506-17-540	1-I9
	1-N5	N370-14-606	1-G7	N386-15-162	1-L7	M505-17-070	1-C10	R507-17-265C	1-G10	R501-17-375	1-H9	M501-17-543A	1-G9
N326-13-980	1-K5	N350-14-607	1-D7	8AF3-15-171	1-L7	R503-17-070	1-I10	R514-17-265B	1-G10	0810-17-381A	1-I9		1-I9
N370-13-986	1-I5	N370-14-607	1-G7	N350-15-172	1-L7	M525-17-100	1-F9	R513-17-270A	1-G10	1281-17-383	1-I9	R505-17-543	1-I9
8931-13-986	1-G5	N350-14-608	1-D7	N350-15-173	1-L7	H501-17-103	1-C9	M510-17-271	1-L9	R501-17-385A	1-I9	1281-17-550	1-I9
	1-H6	N370-14-608	1-G7	N350-15-174A	1-L7		1-D9	0259-17-274A	1-M9	M503-17-402	1-K10	M504-17-552	1-M10
	1-I5	N326-14-609A	1-M6	N350-15-175	1-L7	M501-17-103	1-F9	0884-17-274	1-G10	R501-17-402A	1-N10	R523-17-610	1-I10
	1-L6	N370-14-609	1-G7	N350-15-185	1-L7	B501-17-121	1-H9	0884-17-275B	1-G10	M501-17-404B	1-K10	M512-17-611	1-N9
N3B1-13-990	1-D6	N318-14-616A	1-H7	N350-15-186	1-L7	F401-17-121	1-G12	3648-17-275A	1-G10	R501-17-404B	1-N10	R501-17-612	1-I10
N3B2-13-990	1-D6	N326-14-617	1-H7	N350-15-200	1-L7	0107-17-121	1-H9	8540-17-275A	1-M9	M504-17-406A	1-K10	R501-17-613	1-I10
N350-13-990A	1-D6	N350-14-620	1-D7	N351-15-200A	1-L7	0810-17-121	1-F9	0259-17-276	1-M9	R505-17-406	1-D11	M505-17-620	1-N9
N351-13-990A	1-D6		1-H7	N326-15-202	1-M7		1-H9	0839-17-276	1-G10	M503-17-411	1-K10	R502-17-620C	1-I10
N370-13-990A	1-D6	0813-14-623	1-D7	N332-15-202	1-M7		2-J3	0259-17-277	1-M9	R504-17-411	1-N10	M505-17-621	1-C10
HE41-13-995	1-H6		1-H7	N326-15-203	1-M7		2-N3	0839-17-277	1-G10	0014-17-411	1-K10	R502-17-621A	1-I10
	1-K5	0820-14-625A	1-D7	N350-15-205	1-M7	M501-17-140	1-N9	0259-17-278	1-M9	0103-17-411	1-D11	R501-17-622	1-I10
	1-M6		1-H7	N350-15-211	1-M7	R505-17-200B	1-H9	0839-17-278	1-G10		1-M10	M501-17-628A	1-C10
	1-N5	N318-14-631	1-E7	N332-15-350B	1-M7	R506-17-200A	1-H9	0259-17-279	1-M9	M507-17-412	1-K10	R501-17-628A	1-J10
N3B1-13-996	1-E6		1-H7	N332-15-355	1-N7	M515-17-201A	1-K9	M507-17-281B	1-M9	R502-17-412A	1-N10	M501-17-629A	1-C10
N318-13-996	1-D6	N326-14-633	1-E3	N332-15-370B	1-M7	M503-17-204	1-K9	R505-17-281	1-G10	M503-17-421	1-K10	R503-17-629A	1-J10
			1-G3	N350-15-381	1-M7	R501-17-204	1-E10	R502-17-283	1-H10	R505-17-421	1-N10	3648-17-629	1-J10
**********		N318-14-635	1-E7	N332-15-382	1-N7	R502-17-204	1-E10	4069-17-283A	1-L9	M507-17-422	1-K10	8601-17-629	1-C10
* *			1-H7	N326-15-421	1-M7	M501-17-205	1-K9	4069-17-284E	1-L9	R506-17-422	1-N10	R501-17-631A	1-J10
* 14-000 *		N350-14-660B	1-D7	N326-15-441	1-M7	R501-17-21XA	1-E10	0839-17-287	1-H10	M506-17-431A	1-K10	R501-17-632A	1-J10
* *		N370-14-660A	1-H7	N337-15-610	4-N4	M501-17-210	1-K9	0839-17-288	1-H10	R506-17-431	1-N10	0884-17-632B	1-C10
**********		N350-14-667	1-D7	8553-15-611	4-N4	M510-17-221	1-K9	M502-17-295C	1-K9	M508-17-432	1-K10	R501-17-633A	1-J10
		N370-14-667	1-G7	N326-15-812	1-C8	R507-17-221	1-E10	R501-17-295	1-E10	R502-17-432A	1-N10	0884-17-633B	1-C10
N318-14-100A	1-F7	N350-14-668A	1-E7	N326-15-908	1-C8	0317-17-225	1-E10	M502-17-297A	1-M9	R502-17-435	1-K10	R501-17-634A	1-J10
N326-14-100A	1-C7	N370-14-668A	1-H7	N326-15-909	1-C8		1-K9	M502-17-298A	1-M9		1-N10	0884-17-634B	1-C10
0810-14-113	1-C7	N350-14-670B	1-E7	N326-15-910B	1-C8	R505-17-230C	1-E10	M502-17-299A	1-N9	0221-17-441	1-N10	R501-17-635	1-J10
	1-F7	N370-14-670A	1-H7	N327-15-910B	1-C8	M510-17-231A	1-K9	R501-17-299	1-H10	1669-17-441A	1-F9	0884-17-635B	1-C10
0221-14-115	1-C7	N350-14-680A	1-E7	N249-15-932A	1-C8	M502-17-240C	1-K9	M518-17-300	1-M9		1-G12	R501-17-636	1-J10
	1-F7	N370-14-680A	1-H7	N326-15-932	1-C8	M502-17-240D	1-K9	R506-17-300G	1-H10		1-I9	M502-17-640C	4-N4
0839-14-115	1-K3	N350-14-690A	1-E7	N249-15-933	1-C8	R501-17-240A	1-E10	M503-17-302B	1-M9	1669-17-442B	1-F9	R505-17-640	4-N4
	1-M3	N370-14-690A	1-H7	N326-15-933	1-C8	R504-17-240	1-E10	R504-17-302A	1-H10		1-G12	8130-17-640C	4-N4
0221-14-116	1-C7	N326-14-700A	1-J7	N326-15-934	1-C8	R504-17-240A	1-E10	0821-17-303	1-H10		1-I9	0821-17-641B	1-J10
	1-F7	N326-14-705	1-J7	N249-15-940	1-C8	R504-17-240B	1-E10	M501-17-304B	1-N9	1011-17-443	1-F9	M501-17-651	1-C10
N326-14-117	1-C7	N326-14-710B	1-J7	R230-15-940	1-C8	M501-17-241B	1-K9	M504-17-304	1-M9		1-G12	M502-17-651	1-J10
	1-F7	N326-14-717B	1-J7	N249-15-942	1-C8	M501-17-241C	1-K9	R501-17-304	1-H10		1-I9	M501-17-652	1-C10
0839-14-119B	1-C7	N326-14-720B	1-J7	N326-15-966	1-C8	R501-17-241	1-F10	0839-17-305B	1-H10	M515-17-450	1-L10	M502-17-652	1-J10
	1-F7	N304-14-726	4-N7	N328-15-966	1-C8	R501-17-241B	1-F10		1-N9	R503-17-450	1-N10	M501-17-653	1-C10
8553-14-125	1-C7	N326-14-736	1-J7			F401-17-242A	1-K9	R502-17-306A	1-E10	M510-17-46Y	1-K10	M502-17-653	1-J10
	1-F7	N326-14-737	1-J7	**********		R501-17-242	1-F10		1-K9		1-N10	M501-17-654	1-C10
N326-14-131	1-C7	N326-14-760C	1-J7	* *		R502-17-242C	1-F10	0727-17-306	1-H10	M501-17-465B	1-L10	M502-17-654	1-J10
	1-F7	8871-14-810	1-J7	* 16-000 *		R502-17-242D	1-F10	M507-17-308	1-N9		1-N10	M501-17-655	1-C10
N318-14-135A	1-F7	N201-14-820	4-N4	* *		R504-17-242	1-F10	R524-17-308	1-H10	M512-17-470A	1-C11	M502-17-655	1-J10
N326-14-135A	1-C7	1757-14-821	1-J7	**********		F401-17-243A	1-F10	M501-17-309	1-H10		1-L10	0862-17-660C	1-I9
N318-14-140	1-F7	1757-14-822	1-J7				1-K9		1-N9	M501-17-474	1-C11	W501-17-724	1-C10
N326-14-140	1-E7	1757-14-823	1-J7	N310-16-102	1-D9	M501-17-250	1-L9	M504-17-310C	1-N9		1-L10		1-J10
N326-14-143	1-C7			0603-16-102B	1-C9	R517-17-250	1-F10	R505-17-310B	1-H10	0303-17-474	1-C11	V501-17-725	1-C10
	1-F7	**********		N302-16-118A	1-D9	M508-17-251	1-L9	M501-17-313	1-N9		1-L10	W501-17-725A	1-J10
N326-14-151	1-C7	* *		N302-16-140	1-D9	M505-17-260A	1-L9	0821-17-313	1-I10	M501-17-475	1-C11	W501-17-732B	1-D10
	1-F7	* 15-000 *		N204-16-145	1-C9	M505-17-260B	1-L9	0884-17-315	1-I10		1-L10		
0810-14-171A	1-C7	* *		N302-16-150B	1-C9	R501-17-260A	1-F10	M504-17-316	1-K10	M502-17-476A	1-C11	**********	
	1-F7	**********			1-D9	R501-17-260D	1-F10	R501-17-316A	1-H10		1-L10	* *	
												* 18-000 *	
N326-14-240B	1-C7	N350-15-V03	1-J7	N310-16-210	1-D9	R501-17-260E	1-F10	R502-17-316	1-N9	M501-17-477	1-C11	* *	
	1-G7	N350-15-V12	1-J7	N302-16-214	1-D9	R501-17-260F	1-F10	4069-17-323	1-I10		1-L10	**********	
N386-14-248	1-C7	8AF8-15-010A	1-K7	3975-16-214A	1-C9	M502-17-261	1-L9	0884-17-325B	1-H9	M514-17-480A	1-C11		
3648-14-250	1-D7	8AFC-15-010A	1-K7	N309-16-220	1-C9	R501-17-261	1-F10	0305-17-327	1-I10		1-L10	N326-18-T11	1-F11
	1-G7	8AFD-15-010	1-K7	JF07-16-221	1-D9	R501-17-261B	1-F10		1-N9	8AF2-17-481	1-C11	N327-18-T11	1-F11
N370-14-260B	1-G7	8AFE-15-010	1-K7	8540-16-225	1-C9	M503-17-262	1-L9	0305-17-328	1-I10		1-L10	N326-18-T12	1-F11
N370-14-270B	1-M4	8AFF-15-010	1-K7	F214-16-232	1-D9	M503-17-262A	1-L9		1-N9	M505-17-482	1-C11	N326-18-T15	1-F11
0839-14-273A	1-K3	N350-15-035A	1-K7	1416-16-232A	1-C9	R501-17-262	1-F10	M520-17-330A	1-F9		1-L10	F885-18-T41	4-N4
	1-N3	N350-15-090A	1-K7	8540-16-241A	1-C9	R501-17-262C	1-F10	R523-17-330A	1-H9	0824-17-483	1-C11	N326-18-V99	4-N4
0839-14-274	1-K3	N351-15-090A	1-K7	N309-16-410B	1-C9	R501-17-262D	1-F10	M502-17-335A	1-H9		1-L10	N336-18-W10	1-J11
	1-N3	N370-15-090	1-K7	N310-16-410B	1-D9	R501-17-262E	1-F10	M507-17-335	1-F9	M501-17-486A	1-C11	RF71-18-W20	1-J11
N370-14-280A	1-N4	8AF3-15-100	1-K7	N309-16-460B	1-C9	W501-17-263A	1-F10				1-L10	JE15-18-W25	1-I11
N370-14-290B	1-N4	N304-15-103	1-E6	N310-16-460B	1-D9	F401-17-264A	1-L9	R501-17-335A	1-G12	M501-17-490B	1-C11	RF71-18-W26	1-J11
N370-14-293A	1-N4	N350-15-116	1-K7	N309-16-510	1-C9	G401-17-264	1-F10	R401-17-337A	1-D9	M502-17-490A	1-L10	F811-18-W27	1-I11
B6Y1-14-302	1-E7	N386-15-116	1-K7		1-D9		1-L9	R504-17-337	1-H9	0183-17-491	1-C11	JE15-18-W35A	1-J11
	1-H7	N350-15-117	1-K7	N302-16-520	1-C9	R501-17-264	1-G10	R505-17-337	1-H9		1-M10	N336-18-W36	1-I11
8341-14-310	1-D7	8630-15-120	1-K7	N310-16-520	1-D9	G501-17-265A	1-L9	R502-17-338	1-H9	G402-17-495	1-F9	JF07-18-W45	1-I11
	1-G7	N304-15-125	1-K7			M502-17-265A	1-G10	R501-17-341A	1-D14	R502-17-495	1-I9	N350-18-W50	1-I11
N350-14-600B	1-D7	N350-15-131	1-K7				1-L9		1-I10	M522-17-510	1-C11	N370-18-W50	1-I11
	1-G7	N350-15-140	1-M7			M502-17-265B	1-L9	1281-17-341	1-N9		1-M10	N350-18-W51	1-I11

N370-18-W51	1-I11	N326-18-141A	1-G11			BV01-19-476	1-I13	1758-19-616	1-E14	0338-19-837	1-J12	N350-20-751	1-G5
N349-18-W54	1-J11	N380-18-141	1-G11	**********		0338-19-476	1-I13	1758-19-617	1-E14	BU17-19-838	4-D5	N370-20-751	1-H5
N370-18-W54	1-J11	N318-18-144	1-G11	*	*	BV01-19-480	1-I13	1758-19-618	1-E14	BU17-19-838A	4-E5	N350-20-752	1-D6
B675-18-W59	1-I11	N326-18-144	1-G11	* 19-000	*	0338-19-480	1-I13	0338-19-619	1-E14	BU27-19-838	1-K12	N370-20-752	1-D6
N350-18-W60	1-I11	N326-18-151	1-G11	*	*	0338-19-486	1-I13	0338-19-621	1-L13	BV09-19-850	1-K12	N326-20-811	2-D8
F285-18-W70	1-I11	N318-18-160B	1-G11	**********		0338-19-487	1-I13	0338-19-622	1-E14	BV09-19-870	1-K12	N318-20-820	1-L4
JE15-18-W70A	1-I11	N326-18-160B	1-G11			0338-19-488	1-I13		1-L13	BV05-19-880A	1-K12	N332-20-820B	1-M6
N350-18-W70	1-I11	N318-18-170B	1-G11	BU17-19-020B	1-C12	BU17-19-498	1-I13	0338-19-623A	1-L13	BU17-19-890B	1-K12	N350-20-840A	2-H7
FE2H-18-W77	1-J11	N326-18-170B	1-G11	0842-19-025	1-C12	0338-19-498	1-I13	0338-19-624	1-L13	BV09-19-980A	1-D12	N370-20-840	2-K7
N350-18-W80	1-J11	N318-18-180B	1-G11	BU17-19-027	1-C12	BV01-19-499	1-I13	0338-19-631	1-L13	BV09-19-904	1-D12	N332-20-850A	2-K7
N318-18-X00	1-K11	N326-18-180B	1-G11	BV09-19-031	1-G14	FT01-19-499	1-I13	0338-19-632	1-L13	BV09-19-910A	1-D12	1480-20-950A	1-I6
N326-18-X00	1-K11	N318-18-190B	1-G11	BV09-19-040	1-G12	BV04-19-5K0	1-D14	0338-19-633	1-L13	BV09-19-920B	1-D12		1-M6
N327-18-X00	1-K11	N326-18-190B	1-G11	BU17-19-050	1-C12	BV04-19-5K1	1-D14	0338-19-634	1-L13	BV09-19-930B	1-D12		
E356-18-X01	1-L11	N350-18-211	4-N4	3649-19-064A	1-C12	BU17-19-500	1-J13	0338-19-635	1-L13	BV09-19-933A	1-E12	**********	
N326-18-X05	1-L11	N370-18-211	4-N4	BV09-19-090B	1-C12	BU17-19-500A	1-J13	0338-19-636	1-L13	BU17-19-940	1-E12	*	*
N326-18-X10	1-M11	N326-18-230	4-N4	BV09-19-090C	1-C12	1758-19-503	1-J13	0338-19-639	1-L13	BV09-19-960	1-K12	* 21-000	*
N318-18-X20	1-K11	N326-18-237	4-C5	BV03-19-100	1-C12	3959-19-503	1-J13	BV01-19-650	1-E14	BU17-19-961A	1-E12	*	*
N326-18-X20	1-K11	N326-18-251A	1-H11	BV03-19-100A	1-C12	1758-19-504	1-J13	BV01-19-655	1-E14	BV09-19-980	1-E12	**********	
N318-18-X25	1-L11	N327-18-251	1-H11	BV03-19-211	1-C12	3959-19-504	1-J13	0436-19-656	1-E14	BV10-19-980	1-E12		
N326-18-X25	1-L11	N350-18-300B	1-I11	BU01-19-215	1-C12	BV02-19-505	1-J13		1-M13	BV10-19-986	1-E12	FU01-21-091	1-D13
N326-18-X30	1-K11	N370-18-300B	1-I11	BU46-19-215	1-C12	1758-19-505	1-J13	BU17-19-670	1-F14	**********		FU01-21-097	1-D13
N326-18-X40	1-L11	N336-18-361	1-H11	BU01-19-216	1-C12	3959-19-505	1-J13	0338-19-676	1-F14	*	*	BV01-21-112A	1-D13
F225-18-X56	1-K11	N350-18-381	1-H11	BV03-19-220B	1-C12	BV02-19-506	1-J13	BU17-19-701	1-G14	* 20-000	*	BV01-21-123A	1-D13
N326-18-X56	1-K11	N326-18-397	1-H11	BV03-19-220C	1-D12	3959-19-506	1-J13	0338-19-702A	1-G14	*	*	BV02-21-129	1-D13
N326-18-X57	1-L11	N318-18-400A	1-K11	0338-19-223A	1-D12	BV02-19-507	1-J13	BU17-19-703	1-G14	**********		BV01-21-149A	1-D13
F214-18-X60	1-K11	N318-18-400B	1-K11	BV03-19-240B	1-D12	3959-19-507	1-J13	BU17-19-704	1-G14			BV02-21-154	1-D13
F214-18-X60A	1-K11	N326-18-400A	1-K11	BV03-19-240C	1-D12	BV02-19-508	1-J13	0338-19-706	1-G14	N370-20-130	1-N5	BV01-21-155	1-D13
N327-18-X60	1-K11	N326-18-400B	1-K11	0338-19-245A	1-D12	3959-19-508	1-J13	BV09-19-710	1-I12	N3B1-20-155	1-I4	BV01-21-156	1-D13
N327-18-X60A	1-K11	N327-18-400	1-K11	0338-19-247	1-D12	BV01-19-509	1-J13	0338-19-731	1-H14	N350-20-155	1-I4	BV01-21-195	1-D13
N326-18-X62	1-L11	N327-18-400A	1-K11	0338-19-248	1-D12	0338-19-509	1-K13	BU26-19-732	1-H14	N350-20-160	1-I4	BV01-21-196	1-E13
N326-18-X62A	1-L11	N327-18-401	1-H11	0338-19-255	1-D12	3959-19-509	1-J13	0338-19-733C	1-H14	N350-20-190	1-K5	BU46-21-2F3	1-K12
N326-18-X65	1-K11	JE15-18-51X	4-C5	BU01-19-256	1-G12	BV01-19-510	1-K13	0338-19-734A	1-H14		1-N5	BV09-21-2J1	4-E5
N327-18-X65	1-K11	AM15-18-520A	1-N11	BU01-19-257	1-G12	1758-19-511	1-K13	BT28-19-735	1-I12	N326-20-200A	1-F5	BV09-21-2K0	1-L12
F214-18-X66	1-M11	E566-18-520A	1-N11	0338-19-258	1-D12	BV04-19-530	1-K13	0338-19-735	1-I12		1-H5	BV01-21-201	1-E13
N319-18-X66	1-M11	N251-18-520A	1-N11		1-G12	BV04-19-531	1-K13	0338-19-737	1-I12	N326-20-210A	1-F5	BV01-21-202	1-E13
JE01-18-X70	1-M11	N350-18-522	1-N11	BU46-19-3J4	1-I12	BV01-19-533	1-K13	0338-19-739	1-J12		1-H5	BV01-21-204	1-E13
JF01-18-X70	1-M11	N318-18-59XE	1-N11	BV09-19-310	1-G12	BV04-19-533	1-D14	BV09-19-750	1-N12	N350-20-220	1-F5	BV01-21-207	1-E13
N318-18-X71	1-M11	N318-18-592A	1-N11	BV09-19-310A	1-G12		1-K13	BV01-19-760F	1-N12		1-H5	BV01-21-211	1-E13
N326-18-X71	1-M11	N318-18-593C	1-N11	0338-19-331A	1-G12	BU03-19-534	1-K13	0338-19-768	1-N12	JF01-20-250B	1-I5	BV01-21-213	1-E13
N327-18-X71	1-M11	N318-18-599	4-G11	0338-19-336	1-H12	0338-19-534	1-D14	BV01-19-771	1-N12	N370-20-285A	1-M6	BV01-21-214	1-E13
N318-18-X80	1-L11	N350-18-811	4-C5	0338-19-337	1-H12		1-K13	0338-19-772	1-N12	8574-20-309	1-L5	BV03-21-215A	1-E13
N318-18-X80A	1-L11	N326-18-821A	4-C5	0338-19-338	1-H12	BV09-19-540	1-K13	0338-19-773	1-N12	N370-20-34XA	1-N4	BV01-21-216	1-E13
N320-18-X80	1-L11	N374-18-831	4-C5	0397-19-340	1-H12	BV04-19-560	1-K13	BV01-19-774A	1-N12	B305-20-341	1-I6	BV01-21-217	1-E13
N320-18-X80A	1-L11	N322-18-835A	4-C5	0338-19-341	1-H12	BV04-19-565	1-K13	BV01-19-775A	1-N12		1-M6	BV01-21-221	1-E13
N326-18-X87	1-M11	N350-18-835	4-C5	0338-19-360B	1-I13	BV04-19-566	1-K13	1758-19-781	1-N12	N350-20-341	1-H6	BV01-21-222A	1-E13
JE01-18-X91	1-L11	PN41-18-840	4-C5	0338-19-361B	1-H12	BU02-19-567	1-K13	BV01-19-785	1-N12	N318-20-342	1-K6	BV01-21-224	1-E13
N326-18-X91	1-L11	8574-18-840	4-C5	BU17-19-363	1-H12	BV04-19-570	1-K13	BV01-19-786	1-N12	N332-20-342A	1-I6	BV01-21-228A	1-K12
N326-18-X92	1-L11	N326-18-845	4-C5	FT40-19-363	1-H12	0338-19-590	1-D14	BV01-19-787A	1-N12		1-M6	BV01-21-229A	1-F13
N326-18-X93	1-L11	N350-18-861	4-C5	BU20-19-368	1-H12	0338-19-591	1-D14	BV01-19-788	1-N12	N318-20-344	1-M6	BV01-21-250A	1-K12
E356-18-X95	1-L11	FE30-18-867A	1-E6	BV02-19-381	1-H12	0338-19-593	1-D14	0338-19-791A	1-C13	N370-20-345A	1-M6	BU01-21-253	1-K12
N350-18-0FYB	4-H7	N350-18-880	4-C5	3959-19-381	1-H12	0338-19-594	1-D14	BV01-19-792	1-C13	N350-20-381	1-I6	BU01-21-255	1-K12
	4-J7	N351-18-880	4-D5	3959-19-384	1-H12	0338-19-595	1-D14	BV01-19-793	1-C13	N370-20-381A	1-I5	BV01-21-261	1-F13
N351-18-0FY	4-H7	N352-18-880	4-D5	BV02-19-385	1-H12	0338-19-596	1-D14	0338-19-795B	1-C13	N350-20-41XB	1-I6	FU01-21-261C	1-F13
	4-J7	N353-18-880	4-D5	0338-19-385A	1-H12	0338-19-598	1-L13	BV01-19-797A	1-C13	N372-20-41XA	1-M6	FU01-21-261D	1-F13
N370-18-0FY	4-H7	N370-18-880	4-D5	0338-19-386A	1-H12	BV01-19-6C1	1-L13	BV01-19-798	1-C13	N350-20-41YC	1-I6	FU01-21-262C	1-F13
N3B1-18-05Z	4-J7	N370-18-880A	4-D5	0338-19-388A	1-I12	BV03-19-6C1	1-M13	BV01-19-8A2	1-C13	N350-20-410C	1-G6	FU01-21-262D	1-F13
N350-18-05ZD	4-H7	N3B1-18-881	4-D5	0338-19-389	1-I12	BV01-19-6C2	1-L13	BV01-19-8A9	1-C13	N370-20-410C	1-K6	FU01-21-263C	1-F13
N370-18-05ZD	4-H7	N3B3-18-881	4-D5	BV02-19-391	1-I12	BV03-19-6C2	1-M13	BV01-19-8B2	1-C13	B612-20-468	4-N7	FU01-21-263D	1-F13
N387-18-05ZC	4-J7	N326-18-883	4-D5	1758-19-392A	1-I12	BV01-19-6C3	1-L13	BV01-19-803	1-C13	N326-20-490	1-C5	FU01-21-265C	1-F13
N327-18-057D	4-H7	HE21-18-885A	4-D5	BV01-19-394	1-I12	BV03-19-6C3	1-M13	BV01-19-805C	1-C13	N326-20-490A	1-C5	BV01-21-267	1-F13
	4-J7	N326-18-885A	4-D5	1758-19-394A	1-I12	BV01-19-6C4	1-L13	0338-19-808	1-C13	N370-20-500A	2-I7	BV01-21-269	1-F13
N332-18-057A	4-H7	N387-18-885A	4-D5	0338-19-395	1-I12	BV03-19-6C4	1-M13	BV01-19-811B	1-C13	E508-20-523	1-K4	BV01-21-271	1-K12
N350-18-057	4-H7	N3A1-18-890	2-E7	1758-19-397	1-I12	BV01-19-6C5	1-L13	BV01-19-811C	1-C13		1-N4	BU01-21-274	1-K12
	4-J7	N326-18-890A	2-E7	0338-19-398	1-I12	BV03-19-6C5	1-M13	BV01-19-812A	1-D13	N350-20-550A	2-G7	BV01-21-275	1-L12
N326-18-100B	1-F11		2-I7	BU67-19-431	1-G14	BV01-19-6C6	1-M13	0338-19-814	1-D13	N350-20-600A	2-E7	BU01-21-277	1-L12
N327-18-100	1-F11	N351-18-9E1B	4-D5	BV17-19-431	1-G14	BV03-19-6C6	1-M13	BV01-19-815	1-D13	N370-20-600	2-I7	BU01-21-292A	4-E5
N338-18-100	1-F11	N351-18-9E1C	4-D5	0338-19-432	1-G14	BV01-19-6C7	1-M13	BV01-19-819	1-D13	N350-20-65Y	1-G6	BU01-21-294	4-E5
N339-18-100	1-F11	N350-18-911B	1-K5	0338-19-433A	1-G14	BV03-19-6C7	1-M13	0338-19-822	1-J12	N370-20-65Y	1-M6	BV01-21-294	1-F13
N326-18-105	1-G11	N380-18-911	1-N5	BU17-19-440	1-G14	BV01-19-6C8	1-M13	BV04-19-823A	1-J12	N350-20-66Y	1-H6	BU01-21-295	4-E5
N3X4-18-110	1-F11	N304-18-912	1-I4	BU55-19-440	1-G14	BV03-19-6C8	1-M13	0338-19-825	1-J12	N370-20-66YA	1-M6	BV01-21-296	1-F13
N328-18-110	1-F11		1-K5	BV45-19-443	1-G14	BT08-19-600	1-D14	0338-19-826	1-J12	N350-20-660	1-I6	BV01-21-297	1-F13
N329-18-110	1-F11		1-N5	0338-19-443	1-G14	0338-19-603	1-D14	0338-19-827	1-J12	N370-20-660A	1-M6	BV01-21-299	1-F13
N342-18-110	1-F11	N318-18-921	4-D5	BV09-19-444	4-D5	0338-19-604	1-E14	0338-19-828	1-J12	N3B1-20-661	1-I6	BV01-21-3A0A	1-F13
N343-18-110	1-F11	N361-18-945B	4-C5	0338-19-446	4-D5	0338-19-606	1-E14	0338-19-829	1-J12	N350-20-661	1-I6	BV09-21-3A5	4-E5
N326-18-115A	1-G11	N361-18-946A	4-C5	0338-19-449	1-G14	0338-19-607	1-E14	0338-19-831	1-J12		1-M6	BV01-21-301	1-L12
N319-18-14Y	4-N7	N350-18-996	1-K5	BU17-19-450	1-G14	0338-19-609	1-E14	0338-19-832	1-J12	N318-20-662A	1-K6	BV01-21-302	1-L12
N350-18-14Y	4-N7			BV03-19-460B	1-I13	BU17-19-610	1-E14	0338-19-833	1-J12	N350-20-665	1-G6	BV02-21-302	1-G13
N326-18-140C	1-G11			BV03-19-460C	1-I13	1758-19-613	1-E14	BT28-19-835	1-J12	N250-20-725	1-E6	BV01-21-303	1-L12
N380-18-140	1-G11			BV01-19-470B	1-I13	1758-19-614	1-E14	0338-19-835B	1-J12	N304-20-725	1-E6	BV01-21-305B	1-G13
N318-18-141	1-G11			0338-19-475	1-I13	1758-19-615	1-E14	BV02-19-836	1-J12	N326-20-750	2-H7	BV01-21-306	1-G13

BV01-21-320D	1-L12			FB01-26-610B	2-G3	P094-27-270A	2-C4	FC01-28-170	2-H4	FB05-32-152	2-E5				
BU01-21-322	1-L12	**********		FB05-26-610B	2-G3	P094-27-270B	2-C4	FB01-28-200A	2-F4		2-H5	**********			
BV01-21-330	1-L12	*	*	FB01-26-668	2-G3	P094-27-280A	2-C4	FC01-28-210	2-I4	FB05-32-153	2-E5	*	*		
BV01-21-333	1-G13	* 24-000	*	FB01-26-669	2-G3	P094-27-280B	2-C4	FB43-28-300B	2-I4		2-H5	* 33-000	*		
BU01-21-386	1-L12	*	*	1243-26-671	2-G3	0110-27-301	2-C4	H001-28-333	2-F4	FB05-32-154	2-E5	*	*		
BU20-21-391	1-L12	**********		FA18-26-680	2-H3	0290-27-301	2-L3	FB43-28-350D	2-I4		2-H5	**********			
BU01-21-395	1-L12			FB01-26-694	2-H3	0290-27-302	2-L3	F044-28-398A	2-I4	FB05-32-155	2-E5				
BV01-21-446	1-G13	8599-24-521	1-I11	FA66-26-695	2-H3	0578-27-302	2-C4	FB01-28-401	2-F4		2-H5	FB01-33-021B	2-M5		
	1-L12	8028-24-533	1-J11	FB01-26-710B	2-G3	0118-27-350A	2-C4	FB01-28-460	2-I4	FB01-32-157	2-N4	F051-33-021B	2-M5		
BV01-21-5A1	1-M13			FB05-26-710B	2-G3	0221-27-350	2-L3	FB01-28-470A	2-I4	FB05-32-157	2-N4	FB01-33-031B	2-M5		
BV01-21-5A2	1-M13	**********		H001-26-731A	2-H3	0223-27-401A	2-C4	FB01-28-473	2-I4	FB01-32-168	2-N4	F051-33-031B	2-M5		
BV01-21-5A3	1-M13	*	*	FB01-26-800A	2-H3		2-L3	FC02-28-700	2-G4	B001-32-169A	2-N4	0662-33-042	2-M5		
BV01-21-5A4	1-M13	* 25-000	*	FB01-26-810A	2-H3	0223-27-402A	2-D4	FB43-28-800G	2-J4	FB05-32-180	2-E5	1011-33-043	2-M5		
BV01-21-5A5	1-M13	*	*	H001-26-812	2-H3		2-L3	FB01-28-830	2-J4		2-H5	0662-33-049	2-M5		
BV09-21-5H1	4-E5	**********		FB01-26-851	2-H3	0223-27-403A	2-D4	FB43-28-840	2-J4	FB05-32-186	2-H5	FB01-33-065A	2-M5		
BV01-21-510B	1-M13			FB01-26-861	2-H3		2-L3	FB43-28-845B	2-J4	FB01-32-210	2-C5	FB01-33-071A	2-M5		
BU05-21-525	1-J13	M051-25-100C	2-C3	FB01-26-980F	2-H3	0223-27-404A	2-D4	FB43-28-855B	2-J4	FC01-32-230	2-K5	FB05-33-251	2-M5		
BV01-21-530C	1-N13	M092-25-100	2-C3	FB05-26-980F	2-H3		2-L3	FB01-28-880A	2-J4	FC02-32-230A	2-K5	FB05-33-260B	2-M5		
BV01-21-533	1-N13	P039-25-100A	2-C3	FB01-26-990F	2-H3	0223-27-405A	2-D4	FB01-28-890C	2-E4	FB01-32-240A	2-E5	FB05-33-260D	2-N5		
BV01-21-534	1-N13	P039-25-100B	2-C3	FB05-26-990F	2-I3		2-L3		2-M3		2-H5	FB05-33-270B	2-N5		
BV01-21-535	1-M13	P012-25-123	2-C3	FA66-26-998	2-H3	0223-27-406A	2-D4	FB01-28-896	2-J4	FB01-32-241	2-E5	FB05-33-270D	2-N5		
BV01-21-536	1-N13	1368-25-124	2-C3				2-L3	F055-28-919	2-F4		2-H5	FC02-33-28Z	2-E6		
BV01-21-540B	1-N13		2-D3	**********		0223-27-407A	2-D4	FC01-28-980	2-J4	8021-32-279	2-E5	FC01-33-281	2-D6		
BV01-21-548	4-E5		2-I4	*	*		2-L3				2-H5	FCY1-33-29Z	2-F6		
BV01-21-560	1-N13	G003-25-421	2-J3	* 27-000	*	0223-27-408A	2-D4	**********		8AF1-32-280	2-E5	FC01-33-291	2-D6		
BU03-21-565	1-N13	M030-25-500C	2-D3	*	*		2-L3	*	*		2-H5	F048-33-471	2-N5		
BU03-21-567	1-N13	M040-25-500E	2-D3	**********		0223-27-409A	2-D4	* 32-000	*	FB05-32-380	2-I5	FB05-33-610B	2-D6		
BV01-21-570A	1-N13	M055-25-901	2-C3				2-L3	*	*	FC01-32-380	2-E5	FC01-33-610	2-D6		
BU01-21-631	1-N13	M055-25-902	2-C3	0223-27-012	2-J3	0223-27-411A	2-D4	**********		FC01-32-410	2-K5	G030-33-661	2-I3		
BU01-21-632	1-N13	M055-25-903	2-C3		2-N3		2-L3			FB01-32-411A	2-C5	B001-33-691	2-D6		
BU01-21-633	1-N13	M055-25-904	2-C3	0223-27-030	2-J3	0223-27-412A	2-D4	FC66-32-019A	2-M4	FB78-32-439	2-K5	B107-33-691	2-I3		
BU01-21-634	1-N13				2-M3		2-M3	B001-32-020	2-N4	FB05-32-451	2-E5	FB05-33-691A	2-D6		
BU01-21-635	1-N13	**********		M055-27-100E	2-J3	0223-27-413A	2-D4	FC66-32-020	2-M4		2-I5	0233-33-691	2-D6		
BU01-21-636	1-N13	*	*	M067-27-100E	2-J3		2-M3	FC66-32-030	2-M4	FB05-32-452A	2-I5	0259-33-691	2-L7		
BV01-21-677	1-E12	* 26-000	*	P094-27-100B	2-N3	0223-27-414A	2-D4	FC66-32-040	2-M4	FB05-32-470A	2-K5	FB05-33-693	2-D6		
BV01-21-678C	1-D12	*	*	P094-27-100C	2-N3		2-M3	FB05-32-049	2-K4	FB05-32-471	2-K5	0259-33-693	2-I3		
BU01-21-679	1-N13	**********		P094-27-100D	2-N3	0223-27-415A	2-D4	FC17-32-049	2-K4	FB05-32-481A	2-F5		2-L7		
BV01-21-681	1-G13			M055-27-110A	2-J3		2-M3	FC66-32-049A	2-M4		2-I5	0600-33-693	2-D6		
BV01-21-682	1-G13	H001-26-042	2-F3	M067-27-110A	2-J3	M005-27-421	2-M3	W001-32-084	2-N4	FB05-32-482	2-F5	FC01-33-694	2-D6		
BV01-21-684	1-G13	0730-26-060	2-J3	P012-27-110A	2-N3	P016-27-421	2-D4	FB05-32-090F	2-N4		2-I5	FB05-33-696B	2-E6		
BV01-21-797	1-G13		2-N3	M055-27-120E	2-J3	P017-27-421A	2-D4	B455-32-099	2-N4	FB05-32-490E	2-K5	FD01-33-697	2-E6		
BV01-21-798	1-G13	FB01-26-065A	2-F3	P016-27-120F	2-N3	P044-27-431A	2-D4	FB01-32-100	2-N4	FC01-32-490A	2-K5	FA66-33-699	2-E6		
BV01-21-814	1-G13	FB05-26-113A	2-M5	P016-27-120G	2-N3		2-M3	FB05-32-100B	2-N4	FB78-32-498	2-H5	FB05-33-710B	2-D6		
BV01-21-816	1-G13	H001-26-113	2-E3	M055-27-143	2-J3	M0A1-27-600	2-M3	FC66-32-100B	2-N4	FB78-32-499	2-F5	FC01-33-710	2-D6		
BV01-21-821A	1-C14	H266-26-114	2-E3	P016-27-143	2-N3	P016-27-600B	2-D4	FB05-32-101	2-N4		2-I5	FC01-33-980	2-E6		
		FB01-26-121A	2-E3	M055-27-150B	2-J3	M053-27-604	2-M3	FB05-32-102	2-N4	FC01-32-600A	2-K5	FC02-33-980A	2-E6		
**********		FB01-26-122	2-E3	P016-27-150A	2-N3	M053-27-605	2-D4	FB78-32-110C	2-G5	FC02-32-600A	2-K5	FB01-33-981	2-N5		
*	*	FB01-26-132	2-E3	P090-27-157	2-K3		2-M3	FC01-32-110A	2-D5	FC01-32-610	2-L5	FC01-33-990	2-E6		
* 22-000	*	FB01-26-133	2-E3		2-N3	M0A1-27-609A	2-M3	FB05-32-111	2-D5	FB78-32-611	2-K5	FC02-33-990A	2-E6		
*	*	FB01-26-134	2-E3	M055-27-165	2-J3	M055-27-609	2-D4		2-G5	FB78-32-614	2-L5				
**********		FB01-26-135	2-E3	P090-27-165	2-N3			FB05-32-112	2-D5	FB05-32-620	2-K5	**********			
		FB01-26-136	2-E3	M035-27-171	2-K3	**********			2-G5	FB78-32-630	2-L5	*	*		
M030-22-510B	2-D3	FB01-26-137	2-C7	0305-27-171	2-C4	*	*	FB05-32-113	2-D5	FB05-32-631	2-L5	* 34-000	*		
M040-22-510C	2-D3		2-D7	M055-27-172B	2-K3	* 28-000	*		2-G5	FB05-32-632	2-L5	*	*		
M030-22-520A	2-D3		2-M5	P016-27-172B	2-C4	*	*	FB05-32-115	2-D5	FB05-32-642	2-L5	**********			
M040-22-520A	2-D3	FB05-26-137	2-E3	P094-27-200A	2-C4	**********			2-G5	FB78-32-690	2-L5				
M030-22-530A	2-D3	FB01-26-138	2-E3	P094-27-200B	2-C4			FB05-32-119	2-G5	FC01-32-690	2-L5	FB01-34-011B	2-I6		
M040-22-530B	2-D3	FB01-26-139	2-E3	M025-27-210	2-J3	B214-28-C10	3-J3	FC01-32-11[illegible]	2-D5	FC66-32-730	2-M4	FB67-34-011	2-I6		
M030-22-540A	2-D3	FB01-26-151A	2-F3		2-N3	FC01-28-011	2-G4	FB05-32-120[illegible]	2-G5	FB05-32-740	2-K4	FB01-34-012	2-G6		
M040-22-540A	2-D3	0603-26-161	2-K6	0755-27-210	2-J3	FC33-28-011	2-G4	FC01-32-120	2-D5	FB06-32-740	2-K4	FB01-34-019	2-G6		
M030-22-550A	2-D3	H001-26-205	2-G3	0604-27-220	2-N3	F044-28-013	2-F4	FB05-32-123	2-D5			FB44-34-021	2-I6		
M040-22-550B	2-D3	FB01-26-220	2-I4	M069-27-231	2-K3	FB01-28-014	2-F4		2-G5	FC66-32-740	2-M4	FB67-34-021	2-I6		
8AF3-22-900	1-J14	FB01-26-221A	2-F3	8051-27-235	2-C4	F044-28-015	2-F4	FB01-32-124	2-D5	FC17-32-751	2-K4	FC01-34-021	2-I6		
8AH2-22-900	1-J14	FB01-26-230	2-I4		2-K3	FB01-28-020	2-F4		2-G5	FC17-32-752	2-K4	H260-34-037A	2-F4		
		FB01-26-233	2-G3	8051-27-236	2-C4	FB01-28-025	2-F4	FB01-32-125	2-D5	FC17-32-753	2-K4	FB01-34-091	2-J6		
**********		FB05-26-233	2-G3		2-K3	FB01-28-030A	2-F4		2-G5	FC17-32-754	2-K4	FB01-34-098	2-G6		
*	*	FB05-26-240A	2-F3	M0A1-27-238	2-K3	FB01-28-040	2-F4	FB01-32-126	2-D5	FC66-32-770	2-M4	FB01-34-111A	2-G6		
* 23-000	*	F048-26-240A	2-F3	P016-27-238	2-C4	FB01-28-050	2-F4		2-G5	FB06-32-800A	2-K4	8871-34-134A	2-G6		
*	*	FB05-26-241A	2-F3	M069-27-251	2-K3	B037-28-091	2-I4	FB05-32-129	2-D5	FC17-32-800A	2-K4	FC02-34-151	2-J6		
**********		FB01-26-250	2-I4	0290-27-252	2-K3	FB01-28-091	2-I4		2-G5	FB06-32-801	2-K4	FC18-34-151	J6		
		FB05-26-251A	2-F3	0290-27-253	2-K3	FB01-28-091A	2-I4	FB05-32-131	2-D5	FC17-32-801	2-K4	FB01-34-155	6		
8871-23-129	1-D4	FC01-26-251	2-F3	0290-27-254	2-K3	H266-28-091	2-G6		2-G5	FB05-32-802	2-K4	FB43-34-156B	J6		
8735-23-180	1-G4	FB01-26-261B	2-F3	M025-27-255B	2-K3	FB01-28-092	2-I4	FB05-32-133	2-D5	FC17-32-802[illegible]	2-K4	FC01-34-160	2-G6		
8871-23-180	1-G4	FB01-26-281A	2-G3	M025-27-256	2-K3	FB01-28-099	4-K6		2-G5	FB06-32-980C	2-K4	FC01-34-170	2-J6		
		FB05-26-281A	2-G3	0290-27-256	2-K3	FC01-28-151	2-H4	FB01-32-134	2-E5	FC17-32-980B	2-K4	FC01-34-201	2-G6		
		FB01-26-285A	2-G3	0290-27-259	2-K3	FC02-28-151	2-H4		2-H5	FC66-32-980B	2-M4	8871-34-222	2-J4		
		FB01-26-335	2-F3	M025-27-261A	2-L3	FB01-28-155	2-H4	FB05-32-147	2-E5	FC66-32-980C	2-M4	FC02-34-300	2-G6		
		FC01-26-410	2-F3	0114-27-262	2-L3	FB01-28-156	2-H4		2-H5	FB05-32-986	2-K4	FC02-34-313	2-G6		
		FA67-26-45Z	2-I3	M055-27-270B	2-L3	FB43-28-156A	2-H4	FB05-32-151	2-E5	FC17-32-986	2-L4	H260-34-318	2-G6		
		F048-26-471	2-F3	M055-27-270C	2-L3	FB01-28-160A	2-H4		2-H5			FB01-34-341	2-G6		

FC02-34-350	2-G6	N350-40-100B	2-F7	0727-41-023	2-H8			F048-43-7A9A	2-K9	FB01-45-380E	2-H9	FB02-49-290B	2-I3
FB01-34-380C	2-G6	N351-40-100B	2-F7	FB01-41-031C	2-H8	**********		F048-43-7B0B	2-K9	FB01-45-510A	2-N7	FB05-49-290B	2-F6
FB01-34-460	2-H6	N362-40-100C	2-F7	W090-41-041	2-H8	*	*	FB55-43-7Z1A	2-K9	FB44-45-510	2-N7	FB06-49-290B	2-I3
FB01-34-470	2-H6	N367-40-100B	2-F7	0183-41-043	2-H8	* 43-000	*	F051-43-70XB	2-K9	FB01-45-611E	2-D10	FB01-49-460	2-L7
FB44-34-700C	2-I6	N378-40-100A	2-J7	0824-41-051A	2-H8	*	*	F051-43-708A	2-K9	FB01-45-711B	2-D10	FB01-49-470	2-M7
FB01-34-800G	2-J6	N304-40-161A	2-F7	B092-41-081	2-I8	**********		F051-43-709	2-K9	FB01-45-712D	2-D10	H115-49-570B	2-L7
FB67-34-800C	2-J6	1114-40-161	2-F7		2-K8			F051-43-71YC	2-K9	FC01-45-720	2-D10	B093-49-580	2-L7
FB44-34-900C	2-I6		2-J7	0559-41-081A	2-H8	FB01-43-028A	2-K8	FB05-43-710B	2-E9	FB55-45-721	2-D10		2-M8
		0820-40-166	2-F7	0824-41-084	2-H8	S083-43-028	2-H8		2-G9	FB55-45-722A	2-E10	B603-49-580	2-M8
**********			2-J7	0727-41-131	2-H8	B001-43-029	2-C8	F051-43-72YC	2-K9	FB55-45-731	2-D10	H115-49-580A	2-C9
*	*	N350-40-200B	2-F7	FB05-41-140A	2-H8		2-H8	FB05-43-720B	2-E9	FB55-45-732A	2-E10	FB05-49-610A	2-N8
* 37-000	*	N351-40-200B	2-F7	0613-41-308	2-M9		2-K8		2-G9	UA01-45-902	2-H9	FB05-49-620A	2-N8
*	*	N362-40-200C	2-F7	H005-41-341	2-L7	G030-43-029	2-I8	F051-43-73XB	2-K9	0866-45-903A	1-E12	GA02-49-638	2-M8
**********		N367-40-200B	2-G7	F044-41-370A	2-N7	FB01-43-031	2-I8	FB01-43-750	2-M8	FB01-45-910	2-E10	FB05-49-640A	2-N8
		N378-40-200A	2-J7	8871-41-370	2-N7	FB02-43-031	2-K8	FC39-43-750C	2-C9	FB67-45-910	2-E10	FB01-49-680	2-M8
B002-37-160	2-K6	B322-40-305	2-G7	FB01-41-380	2-N7	FB01-43-040B	2-I8	F048-43-776C	2-K9	FB01-45-912	2-E10	FB01-49-680A	2-M8
FB68-37-190	2-K6	N326-40-305	2-E7	F044-41-380B	2-N7		2-K8	FB55-43-799	2-K9	G037-45-913	2-E10	0305-49-686B	2-D9
FC02-37-190A	2-K6		2-I7	FB01-41-400C	2-L7	FB01-43-042	2-I8	FB05-43-800D	2-M8	FB01-45-914	2-E10		2-M7
FC73-37-190	2-K6	N327-40-305	2-G7	W001-41-412	2-L7		2-K8	FC06-43-800A	2-C9	B075-45-918	2-E10		2-N8
8BFF-37-600A	2-M6		2-J7	0813-41-422D	2-L7	0866-43-062	2-I8	FB01-43-810B	2-E9	B180-45-918	2-E10	FB05-49-720	2-N8
							2-K8		2-G9	FB01-45-919	2-E10	**********	
8BFL-37-600	2-M6	N350-40-305	2-G7	H005-41-424	2-L7								
8BFS-37-600	2-M6		2-J7	H001-41-443	2-H8	FB01-43-063	2-I8	FB05-43-810	2-E9	G030-45-919	2-E10	*	*
FB07-37-790A	2-M6	N378-40-305	2-E7		2-K8		2-K8		2-G9		2-F9	* 50-000	*
FC01-37-790	2-N6	N380-40-305	2-G7	B312-41-470	2-L7	FB01-43-070E	2-K8	FB01-43-830A	2-M8		2-H9	*	*
B210-37-810	2-N6	N378-40-307	2-G7	B312-41-52Z	2-M7	FB05-43-070A	2-I8	2192-43-835A	2-C9	FB01-45-920	2-E10	**********	
FB01-37-810	2-N6	N326-40-353	1-K4	B312-41-53Z	2-M7	FB02-43-090A	2-K8	FB01-43-836	2-M8	FB01-45-930	2-E10		
			2-E7	FB01-41-610	2-C8	1525-43-092	2-K8	FB44-43-836B	2-C9	F048-45-930	2-E10	FC01-50-A30A	3-G3
**********			2-I7	8239-41-619	2-C8	HF05-43-140	2-I8	FB01-43-840A	2-M8	FB01-45-940	2-F10	FC01-50-031	3-F3
*	*	N378-40-355	2-G7	B092-41-644	2-C8		2-K8	FC18-43-840	2-C9	FB55-45-951	2-H9	FB01-50-050A	3-G3
* 39-000	*	2158-40-355	1-K4	0259-41-644	2-H8	D001-43-152	2-G10	FB44-43-850B	2-C9	FB55-45-961B	2-F9	FB01-50-054	3-F3
*	*	8118-40-355	2-G7	FB01-41-650A	2-C8		2-I8	FB44-43-880B	2-C9		2-H9	FB01-50-071	3-F3
**********			2-J7	FC08-41-650	2-C8		2-K8	FB10-43-900	2-E9	H002-45-961	2-F9	FC01-50-071	3-F3
		8134-40-355	1-N4	FC01-41-660	2-C8	GE68-43-231	2-I8		2-G9		2-H9	FB01-50-072	3-F3
FB01-39-021A	2-C7		2-J7	FC17-41-660	2-C8	H001-43-301	2-I8	FB01-43-980	2-E9		2-K9		3-H3
	2-D7	N326-40-357	2-G7	FB44-41-666A	1-N6	FB55-43-310D	2-J9				3-C9	FB01-50-080A	3-F3
FB01-39-022	2-C7	1480-40-375	2-G7	FC17-41-671	2-C8	FB55-43-320D	2-J9	**********			4-K6	FB01-50-090A	3-F3
	2-D7		2-J7	FA54-41-711A	2-C8	FB55-43-330C	2-J9	*	*		4-N7	FC01-50-1A0	3-F3
FB01-39-023	2-F3	N332-40-500A	2-I7	FB44-41-770A	1-J4	FB55-43-350A	2-J9	* 44-000	*	FB01-45-980A	2-F10	FC01-50-1B0	3-F3
FB01-39-031	2-C7	N350-40-500B	2-E7	FB44-41-780A	2-G9	FB01-43-360	2-E9	*	*	FB01-45-990	2-F10	FC01-50-1C0	3-F3
	2-D7	N326-40-524	2-E7	FB01-41-920A	2-L7	FC06-43-360B	2-G9	**********				FC01-50-1D0	3-F3
			2-I7	F044-41-920C	2-L7	FB02-43-370	2-F9	FC01-44-010A	2-M9	**********			
B001-39-037B	2-F4		2-J4	N328-40-524	2-H7	FC06-43-370	2-H9	G030-44-031	2-M9	*	*	FC01-50-1E0	3-G3
FB01-39-040A	2-C7		2-K7	**********		FCY8-43-40Z	2-C9	FB01-44-033	2-M9	* 46-000	*	KA01-50-1G2	3-F3
	2-D7	N326-40-530B	2-H7	*	*	FB02-43-400C	2-N8	FC01-44-034A	2-M9	*	*	FC01-50-111	3-G3
FB67-39-040A	2-C7	N326-40-54XA	2-H7	* 42-000	*	FB02-43-400D	2-N8	FB01-44-061B	2-M9	**********		FC01-50-112	3-G3
	2-D7		2-K7	*	*	B4Y3-43-41Z	2-D9	FB01-44-062A	2-M9	F062-46-AT0A	2-G10	FB01-50-132	3-F3
3975-39-045	2-C7	N327-40-54X	2-H7	**********		H001-43-443	2-C9	FC01-44-063	2-M9	GN52-46-AT1B	2-G10	FB01-50-133	3-G3
	2-D7	N319-40-600B	2-F7				2-M8	FC01-44-063A	2-M9	H338-46-AT8	2-G10	FB01-50-133A	3-G3
FB01-39-340A	2-C7		2-J7	BC88-42-045	2-D8	W023-43-504	2-J9	FB01-44-150B	2-M9	H338-46-AT9	2-G10	FB01-50-133C	3-G3
	2-D7	N326-40-640A	2-H7	FC02-42-110A	2-D8	NA23-43-515	2-D9	0866-44-187A	2-M9	FC07-46-027	2-G10	FC89-50-14X	3-F3
FB67-39-340B	2-C7		2-K7	FB01-42-210B	2-D8	FB01-43-540	2-M8	0866-44-189	2-M9	FC08-46-030A	2-G10	FB01-50-140	3-F3
	2-D7	N326-40-69XB	2-G7	FB01-42-240E	2-D8	F065-43-540	2-C9	FB01-44-410E	2-M9	FC07-46-040A	2-G10	FB01-50-144	3-G3
FB02-39-350A	2-D7		2-J7	FB01-42-245A	2-F8	3597-43-542	2-C9	FB01-44-439A	2-N9	FB02-46-058C	2-G10	3597-50-152	3-H3
FC02-39-350	2-C7	N326-40-690B	2-G7	FB01-42-247A	2-E8		2-M8	1011-44-439	2-N9	1015-46-085	2-I8	FC01-50-180	3-F3
FB01-39-364	2-C7		2-J7	FB01-42-248	2-F8	F065-43-55ZA	2-C9				2-L8	FC01-50-221A	3-H3
	2-D7	N326-40-815	2-H7	FC02-42-250	2-E8	B533-43-62Z	2-D9	**********		FC08-46-100C	2-G10	BF82-50-233	3-G3
FB02-39-370C	2-D7	1480-40-815	2-H7	BF67-42-252	2-E8	NA23-43-625	2-D9	*	*	H338-46-211	2-C10	FB01-50-280	3-H3
FC02-39-370	2-C7		2-K7	GB53-42-270	2-E8	FC01-43-63XA	2-E9	* 45-000	*	FC08-46-300C	2-G10	G030-50-285	3-H3
FC18-39-370	2-C7	N332-40-823A	2-K7	FB01-42-285	2-E8		2-G9	*	*	FC08-46-363	2-G10	FB01-50-290	3-H3
FC02-39-385	2-C7	N332-40-860C	2-K7	FB01-42-289	2-E8	B533-43-63Z	2-D9	**********		FC07-46-571	2-G10	FC01-50-312	3-H3
												FC01-50-313	3-H3
**********		N326-40-861A	2-H7	FB01-42-290	2-E8	W023-43-635	2-E9	FB01-45-111C	2-D10	0187-46-683	2-J8		
*	*		2-K7	0223-42-307	1-I4		2-G9	FB70-45-111	2-D10	1015-46-684A	2-H10	H115-50-313A	3-D4
* 40-000	*	N332-40-865	2-K7	0866-42-366B	2-D8		2-M9	FA66-45-125A	1-C5	0604-46-785	2-J8	FB01-50-321	3-H3
*	*	N350-40-870	2-H7	FB01-42-410B	2-G8	0136-43-635	2-N7	FB55-45-146	2-D10			FB01-50-330B	3-H3
**********			2-K7	FB01-42-451C	2-G8	FC01-43-64XA	2-E9	8116-45-146	2-D10	**********		FB01-50-350	3-H3
		N326-40-874B	2-H7	FB01-42-531B	2-E8		2-G9	FA23-45-181	2-D10	*	*	FB01-50-360	3-H3
N326-40-060B	2-E7	N326-40-908	2-F7	FB01-42-561A	2-E8	FB01-43-640	2-M8	FA23-45-182	2-D10	* 49-000	*	FB01-50-370	3-H3
	2-I7		2-J7	FB01-42-562	2-F8	FC18-43-640A	2-C9	FB01-45-280E	2-E9	*	*	FB01-50-380	3-H3
N328-40-060B	2-E7	N378-40-908	2-F7	FB01-42-565	2-F8	B001-43-694A	2-E9	FB55-45-280F	2-G9	**********		FB01-50-390	3-I3
	2-I7	N380-40-908	2-F7	FB71-42-710	2-E8		2-G9	FB01-45-291A	2-E9			F044-50-425	3-F6
N225-40-061	2-E7		2-J7	FB71-42-715	2-E8		2-J9		2-G9	FB05-49-060E	2-M5	H260-50-6A7	3-L3
	2-I7	N326-40-990C	2-H7	FC01-42-720	2-E8	8573-43-694	2-M8	FB01-45-320	2-F9	FB01-49-130	2-E3	FB01-50-6A8	3-L3
N326-40-065	2-E7	N332-40-990A	2-K7	FB01-42-761	2-F8	F048-43-7A0J	2-J9	FB55-45-320H	2-H9	FB01-49-140	2-E3	FC01-50-6R0APZ	3-D4
	2-I7			8531-42-762A	2-E8	F048-43-7A2	2-J9	FC49-45-330C	2-G9	FB02-49-240	2-I3	FC01-50-6R0ASQ	3-D4
N304-40-073A	2-E7	**********		H260-42-780	2-F8	F048-43-7A3	2-J9	FC49-45-340B	2-H9	FB05-49-240	2-E6	FC01-50-6R0AUC	3-D4
	2-I7	*	*	H260-42-790	2-F8	F048-43-7A4B	2-J9	FB01-45-360C	2-F9	8341-49-240	2-E6	FC01-50-6R0A5N	3-D4
N304-40-078A	2-F7	* 41-000	*	FB01-42-910A	2-F8	F048-43-7A5	2-J9	FB55-45-360C	2-H9	FA66-49-250	2-E6	FC01-50-6S0APZ	3-D4
N326-40-080	2-F7	*	*	FB01-42-980	2-F8	F048-43-7A6	2-J9	FB01-45-370D	2-F9	FB06-49-250	2-I3	FC01-50-6S0ASQ	3-D4
	2-J7	**********		FB01-42-985	2-F8	F048-43-7A7	2-J9		2-H9	FA66-49-280	2-F6	FC01-50-6S0AUC	3-D4
N327-40-080	2-F7					F048-43-7A8	2-J9	FB01-45-380E	2-F9	FB06-49-280A	2-I3	FC01-50-6S0A5N	3-D4
												FC01-50-6V0APZ	3-E4

FC01-50-6V0ASQ 3-E4
FC01-50-6V0AUC 3-E4
FC01-50-6V0A5N 3-E4
FC01-50-6W0APZ 3-E4
FC01-50-6W0ASQ 3-E4
FC01-50-6W0AUC 3-E4
FC01-50-6W0A5N 3-F4
FB01-50-601A 3-L3
FB01-50-611C 3-L3
FB01-50-615C 3-L3
F044-50-650B 3-D6
F044-50-653A 3-D6
F044-50-655B 3-D6
F044-50-656A 3-D6
FC01-50-681APZ 3-D4
FC01-50-681ASQ 3-D4
FC01-50-681AUC 3-D4
FC01-50-681A5N 3-D4
FC01-50-682 PZ 3-D4
FC01-50-682 SQ 3-E4
FC01-50-682 UC 3-E4
FC01-50-682 5N 3-E4
FC01-50-683APZ 3-E4
FC01-50-683ASQ 3-E4
FC01-50-683AUC 3-E4
FC01-50-683A5N 3-E4
FC01-50-691APZ 3-D4
FC01-50-691ASQ 3-D4
FC01-50-691AUC 3-D4
FC01-50-691A5N 3-D4
FC01-50-692 PZ 3-E4
FC01-50-692 SQ 3-E4
FC01-50-692 UC 3-E4
FC01-50-692 5N 3-E4
FC01-50-693APZ 3-E4
FC01-50-693ASQ 3-E4
FC01-50-693AUC 3-E4
FC01-50-693A5N 3-E4
F044-50-7M1A 3-D6
F044-50-7M2 3-D6
FB01-50-7P1A 3-N5
FB01-50-733 4-K11
G043-50-753 3-N5
FB67-50-764A 4-I10
FB01-50-790B 3-N5
FB01-50-792 3-N5
FB01-50-795A 3-C6
UB39-50-795 3-J4
FB01-50-818 3-N5
FB01-50-841 3-N5
FB67-50-850B 3-N5
FC01-50-850 3-N5
FB67-50-852 3-N5
FB67-50-853 3-N5
FB67-50-854 3-N5
FB67-50-855A 3-N5
FB67-50-856A 3-C6
FB67-50-857A 3-N5
8AF1-50-860 3-L3
8AF1-50-870 3-L3
FB01-50-891 4-N3
FB01-50-893 4-C4
4-N3
FB67-50-894 4-C4
FB01-50-895A 4-N3
FB01-50-896 4-N3
FB01-50-897 4-C4
4-N3
B250-50-9V2 3-C6
H005-50-905 3-K3
FB01-50-942A 3-M3
FB01-50-943A 3-M3
FB01-50-945 3-D4
FB01-50-981B 3-H13
FB67-50-981A 3-K13
FB01-50-985B 3-H13
FB67-50-985A 3-K13

51-000

FC17-51-PJ0APZ 3-M3
FC17-51-PJ0ASQ 3-M3
FC17-51-PJ0AUC 3-M3
FC17-51-PJ0A5N 3-M3
FC17-51-PJ2 3-M3
FC17-51-PK0BPZ 3-M3
FC17-51-PK0BSQ 3-M3
FC17-51-PK0BUC 3-M3
FC17-51-PK0B5N 3-M3
FC17-51-PP0APZ 3-M3
FC17-51-PP0ASQ 3-M3
FC17-51-PP0AUC 3-M3
FC17-51-PP0A5N 3-M3
FC17-51-PR0BPZ 3-M3
FC17-51-PR0BSQ 3-M3
FC17-51-PR0BUC 3-N3
FC17-51-PR0B5N 3-N3
FC17-51-PS1A 3-N3
FC17-51-PS2 3-N3
FC17-51-PS3 3-N3
FC17-51-PS5 3-N3
FC17-51-PS6 3-N3
FC18-51-PS6 3-N3
FC17-51-PS7 PZ 3-N3
FC17-51-PS7 SQ 3-N3
FC17-51-PS7 UC 3-N3
FC17-51-PS7 5N 3-N3
FC17-51-PS8 PZ 3-N3
FC17-51-PS8 SQ 3-N3
FC17-51-PS8 UC 3-N3
FC17-51-PS8 5N 3-N3
FC17-51-PS9 3-M3
FB01-51-0G1 3-G4
FB06-51-031 3-G4
FB01 51-032 3-G4
8BF1-51-032 3-G4
BA03-51-033 3-G4
8239-51-035 3-G4
FC42-51-036 3-G4
FB01-51-037 3-G4
FB01-51-042 3-G4
8BF1-51-042 3-G4
FB01-51-047 3-G4
8BF4-51-060 3-L4
FC01-51-061 3-L4
FC01-51-062 3-L4
FC01-51-066 3-L4
8BF4-51-070 3-L4
FC01-51-071 3-L4
FC01-51-072 3-L4
FC01-51-076 3-L4
FC01-51-1G1 3-E5
FC33-51-1G1 3-E5
FC01-51-1H1 3-E5
FC33-51-1H1 3-E5
8BF5-51-120 3-L4
8BF5-51-130 3-L4
FB01-51-141 3-E5
FB67-51-14? 3-E5
8BFA-51-150 3-E5
8BF8-51-150 3-E5
FC01-51-151A 3-E5
FC33-51-151A 3-E5
FC01-51-152A 3-F5
FC01-51-155 3-E5
FB01-51-156 3-F5
FB01-51-157 3-H5
FC01-51-159A 3-F5
FC33-51-159A 3-F5
8BFA-51-160 3-E5
8BF8-51-160 3-E5
FC01-51-161A 3-F5
FC33-51-161A 3-F5
FC01-51-162A 3-F5
FC01-51-169A 3-F5
FC33-51-169A 3-F5
FC01-51-170A 3-E5
FC33-51-170A 3-E5
FB01-51-172 3-H5
FC01-51-180A 3-E5
FC33-51-180A 3-F5
8BF1-51-270 3-H5
FB67-51-272 3-H5
FB67-51-273 3-H5
FB67-51-276 3-H5
FB01-51-360B 3-H4
FB01-51-370B 3-H4
G113-51-401 3-J3
3972-51-402 3-J3
FB01-51-403A 3-J3
FB01-51-404A 3-J3
FB01-51-405A 3-J3
FB01-51-406A 3-J3
8965-51-406 3-J3
FB01-51-407 3-J3
FB34-51-408 4-G11
FB01-51-411A 3-H4
8871-51-411 3-H4
FB01-51-421A 3-H4
FC01-51-440 02 3-J5
FC01-51-441 3-J5
8545-51-460 3-J5
8545-51-461 3-J5
FC01-51-5E1 3-L4
FC01-51-5E2 3-L4
FC01-51-5F1 3-L4
FB01-51-510F 3-H4
FB01-51-511A 3-H4
H001-51-511 3-H4
FB01-51-512 3-H4
FB01-51-513D 3-I4
H001-51-513 3-J4
FB01-51-514A 3-I4
FB01-51-515 3-I4
FB01-51-516 3-I4
FB01-51-517 3-I4
FB01-51-518 3-I4
FB01-51-520F 3-H4
FB01-51-521A 3-H4
FB01-51-522 3-H4
FB01-51-523D 3-I4
FB01-51-524A 3-I4
FB01-51-525 3-I4
FB05-51-530 3-H15
3-N14
FB05-51-531 3-H15
3-N14
8BF1-51-550 3-H5
FB01-51-552A 3-H5
FB01-51-554 3-H5
FB01-51-555 3-H5
8BF1-51-560 3-H5
FB01-51-565 3-I5
FB01-51-580B 3-F5
FB01-51-582A 3-F5
FB01-51-583A 3-F5
FB01-51-584A 3-F5
FB01-51-586 3-F5
FB01-51-587 3-F5
FB05-51-590 3-H15
3-N14
FB05-51-591 3-H15
3-N14
FC01-51-6G0A 3-M4
FC04-51-6G1 3-M4
FC01-51-6G2 3-M4
FC04-51-6G2 3-M4
FC04-51-6G3 3-N4
FC04-51-6G4 3-M4
FC04-51-6G5 3-M4
FC04-51-6G6A 3-M4
FC04-51-6G7 3-M4
FC04-51-6G8 3-M4
FC04-51-6G9 3-M4
FC01-51-6H0A 3-M4
FC04-51-6H1 3-M4
FC01-51-6H2 3-M4
FC04-51-6H2 3-N4
FC04-51-6H3 3-C5
FC04-51-6H5 3-N4
FC04-51-6H6A 3-N4
FC04-51-6H7 3-N4
FC01-51-6H9 3-N4
FC04-51-6H9 3-N4
8AF2-51-610 3-I4
FB01-51-611 3-I4
FB01-51-621A 3-I4
FB01-51-622A 3-I4
FB01-51-623 3-H4
FB01-51-631A 3-J4
FB01-51-632A 3-J4
FB01-51-633 3-H4
8AF2-51-650 3-I4
FB01-51-651A 3-J4
FB01-51-652A 3-J4
FB01-51-66X 3-J4
FB01-51-662A 3-J4
FB01-51-664A 3-J4
FB01-51-665 3-J4
FB01-51-669 3-J4
FB01-51-67X 3-J4
FB01-51-672A 3-J4
FC04-51-674 3-J4
3-N4
4-C8
FC04-51-675 3-N4
FC04-51-680A 3-N4
FC04-51-685 3-N4
FC04-51-688A 3-N4
FC04-51-690A 3-N4
FC04-51-698 3-N4
FB02-51-720 3-L5
FB02-51-740 3-L5
H001-51-782 3-L5
FC01-51-811 3-K3
FC01-51-812 3-J3
FC01-51-813 3-J3
B002-51-814 3-J3
FB01-51-814 3-J3
FB01-51-816 3-J3
4-D8
FB01-51-819 3-J3
FB01-51-82XC 3-K3
B092-51-833 3-C7
3-F7
3-I6
3-L6
FB01-51-850 3-K3
F044-51-890A 3-C6
FB03-51-9A1 3-N3
FB03-51-9A2 3-C4
FB01-51-9B0A 4-K11
FB01-51-9B3 4-K11
FB01-51-9B4 4-K11
FB01-51-9B5 4-K11
FB01-51-9C0A 4-K11
FC17-51-9H0APZ 4-K11
FC17-51-9H0ASQ 4-K11
FC17-51-9H0AUC 4-K11
FC17-51-9H0A5N 4-K11
FC01-51-9J1A 4-K11
FC01-51-9K1A 4-K11
FB02-51-9LXB 4-K11
FC01-51-9L1A 4-K11
FB02-51-9MXB 4-K11
S232-51-906 3-G3
FC01-51-910 3-C6
F044-51-912 3-N5
FC01-51-917 3-C6
FB01-51-920A 3-C6
FB01-51-922 3-C6
FC01-51-930 3-C6
FB01-51-940A 3-C6
FC17-51-960APZ 4-L11
FC17-51-960ASQ 4-L11
FC17-51-960AUC 4-L11
FC17-51-960A5N 4-L11
FB03-51-962 PZ 4-L11
FB03-51-962 SQ 4-L11
FB03-51-962 UC 4-L11
FB03-51-962 5N 4-L11
FB02-51-963A 4-L11
FB02-51-964A 4-L11
FB01-51-966B 4-L11
FB02-51-966 4-L11
FC17-51-968 4-L11
FC17-51-969 4-L11
B129-51-993 3-N3

52-000

FC01-52-111 3-D7
3-M6
FC17-52-111 3-M6
FC01-52-211 3-D7
3-M6
FC17-52-211 3-M6
FB01-52-310H 3-D6
FB01-52-310J 3-D6
FB13-52-310J 3-D6
FB13-52-310K 3-D6
F049-52-310N 3-D6
F049-52-310P 3-D6
0866-52-398A 2-K9
2-M6
FB01-52-410E 3-D6
FB13-52-410E 3-D6
FB01-52-420E 3-D6
FB13-52-420E 3-D6
FB01-52-510D 3-E6
FB01-52-512 3-E6
FB01-52-514B 3-E6
FB67-52-514 3-E6
FB01-52-518 3-E6
FB01-52-519A 3-E6
FB67-52-610A 3-G6
FB67-52-610B 3-G6
FB67-52-610C 3-G6
FB67-52-710A 3-G6
FB67-52-720A 3-G6
FB67-52-750 3-M7
FB67-52-760 3-M7

53-000

FB67-53-021 3-J6
FB01-53-100N 3-H6
FC66-53-100 3-J6
FB67-53-101 3-J6
FB67-53-102 3-J6
FB01-53-110A 3-H6
3-K6
FB01-53-12XD 3-H6
FB67-53-12XD 3-J6
FB01-53-120C 3-H6
FB01-53-131A 3-H6
0187-53-134 3-C9
FB01-53-150D 3-H6
FC66-53-150 3-J6
FB01-53-160 3-H6
FB67-53-160 3-J6
0305-53-160 3-G7
3-H7
3-J8
3-N7
3-N8
FC01-53-170 3-H6
FC66-53-170 3-J6
FB01-53-172 3-H6
3-J6
FC01-53-18X 3-H6
3-J6
FC66-53-180 3-H6
3-J6
FC01-53-190 3-H6
3-J6
FB01-53-192 3-H6
3-J6
FB01-53-200F 3-M6
FB01-53-200G 3-M6
FB34-53-200F 3-M6
FB34-53-200G 3-M6
FC66-53-200 3-D7
FC66-53-200A 3-D7
FB01-53-210J 3-M6
FB01-53-210K 3-M6
FB34-53-210H 3-M6
FB34-53-210J 3-M6
FC66-53-210 3-D7
FC66-53-210A 3-D7
FB34-53-225 3-M6
FC66-53-240C 3-D7
3-M6
FB01-53-250A 3-D7
3-M6
FB01-53-287A 3-H7
FB67-53-287 3-M7
FB01-53-289 3-H7
3-M7
FC01-53-310 3-N6
FC33-53-310A 3-D7
FB67-53-38YC 3-D7
FB01-53-391A 3-N6
FB67-53-391A 3-D7
B092-53-413 3-K8
FB01-53-510C 3-G7
FC66-53-510 3-G7
FC56-53-59X 3-D7
FB01-53-592B 3-H7
FB67-53-592 3-M7
FC01-53-600 3-H8
FC07-53-600 3-H8
FC33-53-600A 3-K8
FC47-53-600A 3-K8
FB67-53-603A 3-K8
FB67-53-606 3-K8
FB67-53-607A 3-K8
FB67-53-612A 3-K8
FB67-53-660 3-K8
FC01-53-660 3-H8
F056-53-660 3-K8
FB01-53-685 3-H8
3-K8
FB67-53-698 3-C8
FC01-53-710A 3-H8
3-K8
FB67-53-726A 3-N8
FB01-53-731B 3-H8
3-K8
FB01-53-732A 3-H8
3-K8
FC01-53-74X 3-H8
FC33-53-74X 3-K8
FC33-53-75X 3-L8
FC01-53-75Y 3-H8
FB01-53-750B 3-H8
FB67-53-750A 3-K8
FB01-53-760H 3-H8
FB67-53-760B 3-L8
0305-53-781A 3-H6
3-K6
3-M7
FC01-53-790 3-H8
FC33-53-790 3-C8
FB01-53-796 3-H8
3-L8
FB67-53-81XA 3-L8
FB67-53-81YA 3-L8
FC01-53-810 3-H8
FC01-53-810A 3-H8
FC33-53-810 3-L8
FC33-53-810A 3-L8
FB01-53-895B 3-I8
FC66-53-91X 3-I8
3-L8
FC66-53-910 3-L8
FB67-53-917 3-L8
FB67-53-918 3-L8
FB67-53-92X 3-L8
FC01-53-920 3-I8
FC33-53-920 3-L8
FC01-53-930A 3-I8
3-M8
FB67-53-94X 3-L8
FB67-53-950 3-M8
FB01-53-951 3-I8
FB67-53-98XA 3-M8

54-000

FB67-54-021 3-J6
FB67-54-101 3-K6
FB67-54-102 3-K6
FB67-54-103 3-K6
FB01-54-110B 3-I6
3-K6
FB01-54-12XE 3-I6
FB67-54-12XD 3-K6
FB01-54-120D 3-I6
FB01-54-131A 3-I6
FC01-54-190 3-I6
3-K6
FB01-54-192 3-I6
3-K6
FB01-54-200K 3-N6
FB01-54-200L 3-N6
FC49-54-200A 3-N6
FC49-54-200B 3-N6
FC66-54-200 3-E7
FC66-54-200A 3-E7
FB01-54-210N 3-M6
FB01-54-210P 3-M6
FC66-54-210 3-D7
FC66-54-210A 3-D7
F044-54-210N 3-M6
F044-54-210P 3-M6
FC66-54-240C 3-E7
3-N6
FB01-54-250A 3-E7
3-N6
FB01-54-287A 3-H7
FB67-54-287 3-M7
FB01-54-289 3-H7
3-M7
FC01-54-310 3-N6
FC33-54-310A 3-E7
FB67-54-38YC 3-E7
FB01-54-391A 3-N6
FB67-54-391A 3-E7
FB01-54-400H 3-G7
FB55-54-400D 3-G7
FB67-54-400E 3-G7
FC56-54-59X 3-D7
FB01-54-592B 3-H7
FB67-54-592 3-M7
FB67-54-603A 3-M8
FB67-54-606 3-M8
FB67-54-607A 3-M8
FB67-54-660 3-M8
FC01-54-660 3-I8
FB01-54-685 3-I8
3-M8

FB67-54-698 3-E8
FB01-54-731B 3-I8
3-M8
FC01-54-74X 3-I8
FC33-54-74X 3-M8
FC33-54-75X 3-M8
FC01-54-75Y 3-I8
FB01-54-750B 3-I8
FB67-54-750A 3-M8
FC01-54-790 3-I8
FC33-54-790 3-E8
FB01-54-796 3-I8
3-M8
FB67-54-81XA 3-M8
FB67-54-81YA 3-N8
FC01-54-810A 3-I8
FC01-54-810B 3-J8
FC33-54-810A 3-N8
FC33-54-810B 3-N8
FB01-54-895B 3-J8

FB67-54-917 3-N8
FB67-54-94X 3-N8
FB01-54-950 3-J8
FB67-54-950 3-N8

****
* *
* 55-000 *
* *
****

FC01-55-210A 3-C10
FC01-55-212 3-C10
FB01-55-216A 3-J10
B001-55-225A 4-G5
FC01-55-225 3-F10
FC03-55-23Y 4-G6
FC03-55-235 4-G6
B092-55-257 3-C10
FC01-55-257 3-C10

8545-55-261 3-H10
8548-55-261 3-H10
FC07-55-280 3-D11
G032-55-280A 3-C10
8531-55-412 3-D11
FC01-55-420 3-F10
FC66-55-420 3-F10
FB01-55-422 3-F10
FC01-55-423 3-F10
FB01-55-424 3-F10
FC01-55-430A 3-H10
FC07-55-430A 3-H10
FC17-55-430A 3-H10
FB02-55-431 3-C10
FC66-55-431 3-C10
FC07-55-432 3-H10
FB01-55-433 3-C10
FB01-55-437 3-H10
FC01-55-441 3-H10
FC01-55-442 3-H10

FC07-55-442 3-H10
FC17-55-442 3-I10
FC01-55-444 3-I10
FB02-55-447B 3-C10
FC01-55-447 3-I10
FC02-55-448 3-C10
FC06-55-448 3-C10
FC07-55-448 3-H10
FC66-55-448 3-C10
FC07-55-449 3-H10
FC17-55-451 3-I10
FC07-55-452 3-I10
FC01-55-461 3-I10
FC07-55-461 3-I10
FC17-55-461 3-I10
KA01-55-465 3-H10
KA01-55-466 3-H10
FC01-55-471 3-I10
FC17-55-471 3-I10
FC01-55-481 3-I10

FC17-55-481 3-I10
FC01-55-489 3-I10
FC01-55-491 3-I10
FC66-55-616 4-I5
FC67-55-617 4-I5
F055-55-71XB02 3-D10
F055-55-71XB48 3-D10
FC02-55-710 3-D10
FC06-55-710 3-D10
FC66-55-710 3-D10
FB01-55-713 3-D10
FB01-55-714 3-D10

****
* *
* 56-000 *
* *
****

FB01-56-030 1-N11

B001-56-051 3-C9
FB67-56-051 3-C9
1011-56-051 3-C9
B092-56-052 3-C9
H260-56-052 3-C9
FB01-56-056 3-C9
FB01-56-057 3-C9
FB31-56-058 3-D9
FB01-56-111C 3-E9
FC01-56-130 3-N6
FC66-56-130 3-E7
8173-56-135 3-E7
3-N6
FC01-56-140 3-N6
FC66-56-140 3-E7
FB01-56-172A 2-M6
FB01-56-176 2-M6
G030-56-176 3-G10
FB01-56-177 2-M6
FB01-56-181A 3-E7
3-N6
FB01-56-182A 3-E7
3-N6
FB01-56-19XA 3-E9
FB01-56-191A 3-E9
FB01-56-192A 3-E9
FB01-56-22X 3-C7
3-E7
FC66-56-220A 3-E7
FB01-56-221A 3-C7
FC66-56-230A 3-F7
FB01-56-231A 3-C7
0243-56-231 1-N11
0118-56-241 3-C9
8477-56-241 3-C9
0118-56-242B 3-C9
FB01-56-26X 3-E9
FB01-56-260C 3-E9
FC01-56-27X 3-D13
FC01-56-28X 3-D13

FB01-56-280C 3-E9
FB67-56-352A 3-E9
FB67-56-353A 3-E9
FB67-56-36YA 3-E9
FB01-56-361A 3-I6
3-K6
FB01-56-410B 3-E9
FB01-56-414 2-K9
3-F9
FB01-56-416 2-C7
3-E9
FB01-56-420A 3-F9
FB01-56-430C 3-F9
FB01-56-450D 3-F9
FB01-56-460D 3-F9
FB71-56-470 3-F9
FC01-56-510A 3-F9
FC01-56-521A 3-F9
FB02-56-620G 3-E6
FB15-56-620G 3-E6

0810-56-639 3-D9
FB01-56-651 3-E6
FB01-56-710C 3-E6
FB67-56-74XA 3-N8
FB67-56-740 3-F6
FB67-56-76XB 3-F9
FB01-56-761 3-H7
FC01-56-770 3-E6
FB01-56-780D 3-F6
FB67-56-780 3-N8
FB01-56-786A 3-E6
FB01-56-787A 3-E6
FB01-56-788 3-E6
U839-56-799 4-G11
FB67-56-802 3-G6
FB01-56-81X 3-I6
3-K6
FC01-56-81Z 3-I6
3-K6
FC01-56-811 3-I6
3-K6
FB01-56-812 3-I6
3-K6
FB67-56-820 3-G6
FB67-56-835 3-G6
FB67-56-840 3-G6
FB02-56-850E 2-G8
F055-56-860 2-G8
8BF1-56-860 3-G6
FB01-56-870B 2-G8
8BF1-56-870 3-G6
FB01-56-880C 2-G8
FB01-56-890 2-G8
FB67-56-890 3-M7
B130-56-897 3-F6
FB67-56-904 3-D3
0820-56-905 3-G3
FB01-56-920 3-F9
FB67-56-920G 2-G8
FB67-56-930F 2-G8

FB01-56-940 3-F9
FB67-56-940F 2-G8
FB01-56-944 3-F9
FB67-56-952 3-G6
FB67-56-960A 2-M6
FB01-56-961B 2-M6
FB03-56-961B 2-M6
FB01-56-963 3-I6
3-L6
FB01-56-964 3-I6
3-L6
FB01-56-971 2-M6
FB67-56-971 2-M6
0866-56-971 3-D9
FB01-56-981D 1-N11
FC01-56-99X 3-F9
FB01-56-990B 3-E9

****
* *
* 57-000 *
* *
****

FC66-57-K00A 3-G13
FC66-57-K1XD 3-G13
FC66-57-K2XG 3-G13
FC66-57-K2YG 3-G13
FC66-57-K40B 3-G13
FC66-57-K9XB 3-F7
FC66-57-K9YB 3-F7
NA01-57-K91 3-G13
4-G11
NA01-57-K92 3-G13
FC67-57-K95 3-G13
FC66-57-K98 3-G13
FC66-57-K99 3-G13
B455-57-05X 3-J11
3-K12
FCY3-57-100 02 3-K12
FCY3-57-100 48 3-K12

FCY4-57-100 02 3-J11
FCY4-57-100 48 3-J11
FCY5-57-100 02 3-J11
FCY5-57-100 48 3-J11
FC11-57-100C02 3-J11
FC11-57-100C48 3-J11
FC13-57-100C02 3-J11
FC13-57-100C48 3-J11
FC17-57-100B02 3-J11
FC17-57-100B48 3-J11
FC34-57-100C02 3-K12
FC34-57-100C48 3-K12
0259-57-109 3-J11
3-K12
FCY3-57-150 02 3-K12
FCY3-57-150 48 3-K12
FCY4-57-150 02 3-J11
FCY4-57-150 48 3-J11
FCY5-57-150 02 3-J11
FCY5-57-150 48 3-J11
3-K6
FC11-57-150B02 3-J11
FC11-57-150B48 3-K11
FC13-57-150B02 3-K11
FC13-57-150B48 3-K11
FC17-57-150A02 3-K11
FC17-57-150A48 3-K11
FC34-57-150B02 3-K12
FC34-57-150B48 3-K12
FB10-57-620C02 3-F13
FB10-57-620C48 3-F13
FC01-57-620A02 3-D13
FC01-57-620A48 3-D13
FC33-57-630 00 3-F13
FC33-57-630 48 3-F13
FC01-57-631 02 3-D13
FC01-57-631 48 3-D13
FC02-57-631 02 3-D13
FC02-57-631 48 3-D13
FB10-57-680A02 3-F13
FB10-57-680A48 3-F13

FC01-57-680A02 3-D13
FC01-57-680A48 3-D13
FC66-57-690A00 3-F13
FC66-57-690A48 3-F13
FC01-57-811 3-D13
FC02-57-811 3-D13
FC01-57-920B02 3-D13
FC01-57-920B48 3-D13
FC01-57-930B 3-D13
FC01-57-940B02 3-E13
FC01-57-940B48 3-E13
FC01-57-980B02 3-E13
FC01-57-980B48 3-E13
FC01-57-990B 3-D13
FC01-57-999A 3-E13

****
* *
* 58-000 *
* *
****

FC01-58-020A 3-H13
FC01-58-020B 3-H13
FC33-58-020A 3-K13
FC33-58-020B 3-K13
FC01-58-031 3-H13
FC01-58-031A 3-H13
FC33-58-031 3-K13
FC33-58-031A 3-K13
B092-58-201A 3-H13
3-K13
FB67-58-210 3-H13
3-K13
BA54-58-225 3-I13
3-L13
GJ21-58-226 3-H13
3-K13
FB67-58-240 3-H13
3-L13
H260-58-265C 3-C14

H260-58-265C 3-I14
FB01-58-270B 3-C14
3-I14
HG30-58-302A 3-C14
3-I14
FB01-58-303B02 3-C14
3-I14
FB01-58-303B48 3-C14
3-I14
FB01-58-309A 3-C14
3-I14
FB02-58-309 3-C14
3-I14
FB05-58-310A 3-I14
FC01-58-310 3-C14
G030-58-315 3-C3
3-C14
3-I14
H001-58-315 3-C14
3-I14
4-K3
FB02-58-316A02 3-G14
3-K14
FB02-58-316A48 3-G14
3-L14
FB05-58-318 3-D14
3-J14
FB02-58-330A02 3-D14
3-J14
FB02-58-330A48 3-D14
3-J14
FB01-58-335 3-D14
3-J14
FB06-58-350A 3-D14
3-J14
FB06-58-350B 3-D14
3-J14
B093-58-351 3-D14
3-J14
G212-58-351 3-D14
3-J14
B092-58-355 3-F14
3-K14
4-K3
B001-58-361A 3-F14
3-K14
FB02-58-410BPZ 3-D14
3-J14
FB02-58-410BSQ 3-D14
3-J14
FB02-58-410BUC 3-D14
3-J14
FB02-58-410B5N 3-E14
3-J14
FB02-58-410CPZ 3-E14
3-K14
FB02-58-410CSQ 3-E14
3-K14
FB02-58-410CUC 3-E14
3-K14
FB02-58-410C5N 3-E14
3-K14
FB01-58-412 3-D14
3-J14
H043-58-492 3-C3
H043-58-493 3-C3
FB01-58-495 3-D3
FB03-58-496 3-E14
3-K14
S084-58-502 3-I13
B092-58-505 3-F14
FB67-58-510C 3-L13
FB01-58-511 3-J13
FB05-58-560J 3-F14
FB67-58-560E 3-K14
FB05-58-58X 3-F14
FB05-58-581 3-F14
FB05-58-583A 3-F14
B094-58-584 3-F14
FB05-58-590B 3-F14

FB05-58-592B 3-F14
B094-58-593 3-H14
B094-58-595 3-D14
FB05-58-596 3-G14
FB05-58-597 3-G14
FB67-58-6A0A 3-L13
FB01-58-60XD 3-I13
FB01-58-603B 3-I13
FB01-58-604A 3-I13
FB01-58-606A 3-I13
FB67-58-61XB 3-L13
0259-58-612 4-N9
FB67-58-651 3-L13
FB67-58-661B 3-L13
FB01-58-760C 3-I13
FB67-58-760B 3-L13
FB02-58-762A 3-J13
3-M13
G031-58-762 3-J13
3-M13
FB67-58-770F 3-M13
1011-58-772 3-M13
FB01-58-810 3-N14
FB67-58-810D 3-H15
FB01-58-815 3-H15
3-N14
FB01-58-821 3-N14
FB67-58-821 3-H15
FB01-58-831E 3-J13
FB70-58-861 3-L14
FC04-58-861 3-G14
FB67-58-865 3-M7
FB68-58-865 3-N7
B038-58-866 3-G14
0559-58-868 2-F9
2-H7
2-K7
G067-58-873 3-G14
3-L14
FB01-58-876 3-G14
3-L14
FB67-58-877C 3-M13
FB67-58-879 3-M13
FB67-58-910 3-M13
H272-58-911 3-M13
0187-58-922 3-F15
3-K15

****
* *
* 59-000 *
* *
****

FC01-59-020A 3-H13
FC01-59-020B 3-H13
FC33-59-020A 3-K13
FC33-59-020B 3-K13
FC01-59-031 3-H13
FC01-59-031A 3-H13
FC33-59-031 3-K13
FC33-59-031A 3-K13
FB67-59-210 3-H13
3-K13
FB67-59-240 3-I13
3-L13
FB01-59-303B02 3-C14
3-I14
FB01-59-303B48 3-C14
3-I14

****
* *
* 60-000 *
* *
****

FB01-60-070A 3-G10
FB02-60-070A 3-G10
FB67-60-070 3-G10
FC47-60-070 3-G10
UB40-60-071 2-C8
3-G10
FB01-60-121B 3-C16
W023-60-122 4-L11
FB01-60-141B 3-C16

FB02-59-330A02 3-D14
3-J14
FB02-59-330A48 3-D14
3-J14
B001-59-335 3-D14
3-J14
FB02-59-410BPZ 3-E14
FB02-59-410BSQ 3-E14
FB02-59-410BUC 3-E14
FB02-59-410B5N 3-E14
FB02-59-410CPZ 3-E14
FB02-59-410CSQ 3-E14
FB02-59-410CUC 3-E14
FB02-59-410C5N 3-E14
FB06-59-410CPZ 3-E14
3-K14
FB06-59-410CSQ 3-E14
3-K14
FB06-59-410CUC 3-E14
3-K14
FB06-59-410C5N 3-E14
3-K14
FB06-59-410DPZ 3-E14
3-K14
FB06-59-410DSQ 3-E14
3-K14
FB06-59-410DUC 3-E14
3-K14
FB06-59-410D5N 3-E14
3-K14
FB03-59-496 3-F14
3-K14
FB06-59-496 3-G14
3-L14
FB67-59-510C 3-L13
FB01-59-511 3-I13
FB05-59-560J 3-F14
FB67-59-560E 3-K14
FB05-59-58X 3-F14
FB05-59-583A 3-G14

FB05-59-590B 3-F14
FB67-59-6A0A 3-L13
FB01-59-60XD 3-I13
FB01-59-603B 3-I13
FB01-59-604A 3-I13
FB67-59-606 3-M13
FB67-59-61XB 3-L13
FB67-59-651 3-L13
FB67-59-661B 3-L13
FB01-59-760C 3-I13
FB67-59-760B 3-M13
FB02-59-762A 3-J13
3-M13
FB67-59-770F 3-M13
FB01-59-810 3-N14
FB67-59-810D 3-H15
FB01-59-821 3-N14
FB67-59-821 3-H15
FB01-59-831E 3-J13
FB70-59-861 3-L14

FC04-59-861 3-G14
FB67-59-865 3-N7
FB68-59-865 3-N7
FB67-59-877C 3-M13

PART NUMBER INDEX / INDEX DES NUMEROS DE PIECES / TEILENUMNER-INDEX / INDICE DE NUMERO DE PARTES

FB01-60-161A02	3-G11	FB04-61-J14	4-J3	FC20-61-467	3-L16	FB01-62-866B	4-L3	FB01-64-45X 02	3-E11	FB01-66-A9Y	4-L6	GJ21-66-450A	2-N9
FB01-60-161A48	3-G11	FB01-61-J15	4-I3	FC01-61-468	3-I16	FB01-62-867A	4-L3	FB01-64-45X 48	3-E11	HE02-66-A9Z	4-K6	BR70-66-490A	2-J8
FB01-60-171A02	3-G11	FB04-61-J15	4-J3	UC86-61-468	3-L16	B499-62-868	3-D9	FC01-64-45X	3-E11	FB01-66-A90	4-L6		2-L8
FB01-60-171A48	3-G11	FCY0-61-J17	4-C3	FB01-61-471	3-I16		3-H14	FC01-64-450A02	3-E11	FB01-66-A91	4-K6	B002-66-490A	2-J8
FB01-60-181	3-G11	FCY1-61-J17	4-C3	FB04-61-471	3-L16		3-L14	FC01-64-450A48	3-E11	FB01-66-A92	4-L6		2-L8
FB01-60-191	3-G11	FCY6-61-J17	4-C3	FB02-61-472	3-J16	FB01-62-868	4-L3	FB03-64-451	3-D11	HE02-66-A94	4-K6	LA01-66-490A	2-H8
FC66-60-220A	3-D10	FB01-61-J20	4-I3	FB01-61-473A	3-I16	FB01-62-869	4-L3	FB07-64-451	3-D11	HE02-66-A96	4-K6	FA54-66-540	3-K10
FB01-60-221A	3-D10	FB04-61-J20	4-J3	FB02-61-473	3-J16	FB01-62-911C	4-L3	FB01-64-452	3-E11	FC04-66-BC1	4-I6	FB02-66-540	4-C6
BR70-60-222	3-D10	FB02-61-K00A	4-D3	FB04-61-473B	3-L16	FB01-62-912B	4-L3	FC01-64-452	3-E11	LA05-66-BC2	4-H6	G030-66-540B	4-N9
FB01-60-230A	3-D10	FC20-61-K00	4-G3	FB05-61-473A	3-L16	FB01-62-913C	4-L3	FB01-64-453	3-E11	LA05-66-BC3	4-H6	LA01-66-546	4-C6
FC66-60-230B	3-D10	F044-61-K04	4-D3	FB01-61-474	3-J16	FB02-62-913B	4-L3	FC01-64-46X	3-E11	F055-66-BL1	4-H6	FC66-66-6S0	4-G5
FB01-60-232	3-D10	FB02-61-K05	4-D3	FB02-61-474	3-J16			FB01-64-490B	3-D11	F055-66-BL2	4-H6	FB02-66-600B	4-G5
FC66-60-232	3-D10	FC20-61-K1X	4-G3	FB01-61-475A	3-J16	**********		FB01-64-491	3-F11	FC01-66-BR1	4-I6	FC01-66-730	4-D7
FB01-60-233	3-D10	F044-61-K10A	4-D3	FB04-61-475E	3-L16	*	*	H001-64-493	3-F11	FC01-66-BR2	4-I6	FC66-66-730A	4-F7
FC66-60-233	3-D10	FC20-61-K12	4-G3	FB05-61-475	3-L16	* 63-000	*	FB01-64-495	3-F11	FC01-66-BR3	4-H6	FC01-66-731	4-D7
FB01-60-261A	3-D10	FC20-61-K13	4-G3	8562-61-475	3-J16	*	*	FC01-64-610A	3-E10	0483-66-061A	3-G4	FC66-66-731	4-F7
FB01-60-350E02	3-J10	FC20-61-K17	4-H3	FB04-61-476A	3-M16	**********		FC01-64-612	3-D10	FB01-66-117	4-H5	H001-66-733	4-D7
FB01-60-350E48	3-J10	D001-61-K19A	4-D3	8562-61-476	3-J16			FC01-64-613	3-E10	FB01-66-119	4-H5		4-F7
FC66-60-350B02	3-J10	FC20-61-K19	4-G3	FB01-61-477	3-J16	FB01-63-310E	4-L3	FC01-64-614	3-E10	FB01-66-120	4-H5	H001-66-739	4-D7
FC66-60-350B48	3-J10	FC20-61-K20	4-G3	FB02-61-477	3-J16	8BF3-63-620	4-L3	FC01-64-621	3-E10	FC66-66-120A	4-H5		4-F7
FC66-60-36XB02	3-J10	FC20-61-K21	4-G3	FB04-61-477	3-M16	FB01-63-865A	4-M3	FC01-64-625	3-E10	FB01-66-126	4-H5	FC01-66-760	4-H7
FC66-60-36XB48	3-J10	FB01-61-K25	4-D3	FB01-61-478A	3-J16	FB01-63-866B	4-M3	FB01-64-728	3-G11	FB01-66-127	4-H5	FC66-66-760A	4-J7
FC66-60-361B02	3-J10	FC20-61-K25	4-G3	FB04-61-478A	3-M16	FB03-63-901E	4-C4	FC01-64-760	3-G11	FC01-66-130	4-I5	FC01-66-762	4-H7
FC66-60-361B48	3-J10	FC20-61-K27	4-H3	FB01-61-480A	3-J16	FC02-63-901	4-N3	FB01-64-770	3-G11	FC66-66-130	4-H5	FC66-66-762A	4-J7
B092-60-408	3-J10	FC20-61-K29	4-H3	FB04-61-480E	3-M16	8182-63-903	4-C4	FC66-64-770	3-G11	FC01-66-131	4-I5	FB03-66-780	4-C6
FC01-60-420B	3-K10	FC20-61-K30	4-G3	FC20-61-481	3-M16		4-N3	FB01-64-828	3-G11	FC01-66-132	4-I5	FB01-66-790	4-C6
FC66-60-420B	3-K10	FB01-61-K39	4-E3	UB39-61-481A	3-M16	FB02-63-912B	4-M3	FC01-64-832	3-G11	FC01-66-151	3-D3	FB05-66-792	4-C6
FC01-60-610	3-I16	FB01-61-L10	4-E3	FB04-61-500B	3-M16	FB01-63-930	4-N3	FC01-64-833	3-G11	FC02-66-151	3-D3	FC66-66-9BX	4-L6
FB01-60-635	3-K10	FC20-61-L10	4-H3	FB04-61-500C	3-M16	FB02-63-930	4-N3	FC01-64-840	3-G11	H043-66-154	3-D3	FC67-66-9BX	4-L6
FB01-60-720A02	3-K10	FB01-61-L11	4-D3	FB01-61-501	3-J16	FB67-63-931A	4-C4	FB01-64-850 02	3-M10	BC46-66-158	3-D3	FC01-66-9B6	4-K6
FB01-60-720A48	3-K10	FC20-61-L11	4-G3	8572-61-510	3-I16	FB67-63-932B	4-C4	FB01-64-850 48	3-M10	FC01-66-160A	4-I5	FC02-66-9C0A	4-H6
FB01-60-728A	3-K10	FB01-61-L12	4-E3	FB01-61-52X	3-J16	FB01-63-959	4-N3	BE32-64-903	3-M10	FC07-66-160A	4-I5	F055-66-9L0A	4-H6
FB01-60-731A02	3-K10	FC20-61-L12	4-H3	FB04-61-52X	3-M16			BE32-64-904	3-M10	FC66-66-160A	4-I5	FC03-66-9W0A	4-H6
FB01-60-731A48	3-K10	FB01-61-L13	4-E3	FB01-61-520A	4-I3	**********		FB01-64-905 02	3-K10	FB01-66-161	4-I5	FC04-66-9W0	4-H6
FB01-60-732A02	3-L10	FC20-61-L13	4-H3	FB04-61-520A	4-J3	*	*	FB01-64-905 48	3-K10	FB01-66-162	4-I5	FC66-66-9W0	4-H6
FB01-60-732A48	3-L10	FC20-61-L16	4-G3	FB04-61-526A	3-M16	* 64-000	*	FB01-64-911A02	3-N10	FC01-66-163	4-I5	FC02-66-920A	4-I6
FB01-60-733	3-L10	FC20-61-L17	4-H3	FB05-61-526	3-M16	*	*	FB01-64-911A48	3-N10	FB01-66-164	4-I5	FC04-66-920	4-I6
FB01-60-734A	3-L10	FC20-61-L30	4-H3	FB01-61-527A	3-J16	**********		FB01-64-912 02	3-N10	FC01-66-166	4-I5	FC32-66-920	4-I6
FB01-60-735	3-L10	FC05-61-R12	3-K16	FB04-61-527B	3-M16			FB01-64-912 48	3-N10	FC66-66-166	4-J5	FC66-66-920	4-I6
FB01-60-736	3-L10	1708-61-031	3-D9	FB01-61-528	3-J16	FC01-64-030 02	3-L10	FB01-64-913	3-N10	FC01-66-167	4-J5	FB01-66-930B	4-K6
FB67-60-785A02	3-L10	FB01-61-130C	3-E16	FB04-61-528	3-N16	FC01-64-030 48	3-L10	FB01-64-914 02	3-N10	FC66-66-167A	4-J5	FB67-66-930	4-L6
FB67-60-785A48	3-L10	FC01-61-140	3-G16	FC20-61-545	3-N16	FC33-64-030 02	3-L10	FB01-64-914 48	3-N10	FC01-66-168	4-J5	FB02-66-940B	4-L6
FB01-60-786A	3-L10	FC07-61-140	3-G16	F044-61-545A	3-K16	FC33-64-030 48	3-L10	FB01-64-921A02	3-N10	FB01-66-169	4-J5	FB68-66-940B	4-L6
FB01-60-795B02	3-L10	FB01-61-150A	3-C16	FB04-61-546A	3-N16	FB01-64-043	3-M10	FB01-64-921A48	3-N10	FC01-66-170	4-J5	FC01-66-940B	4-L6
FB01-60-795B48	3-L10	FB02-61-155C02	3-D16	FC01-61-546	3-K16	FB01-64-044	3-M10	FB01-64-922 02	3-N10	FC01-66-171	4-J5	FB02-66-941	4-L6
FB01-60-821 02	3-J10	FB02-61-155C48	3-D16	FB04-61-557	3-N16	B092-64-046	3-J10	FB01-64-922 48	3-N10	FC01-66-172	4-J5	GB08-66-941	4-D8
FB01-60-321 48	3-J10	FB02-61-156B	3-D16	FC01-61-690	3-K16	FB01-64-048	3-J10	FB01-64-923	3-N10	FC01-66-173	4-J5		4-H8
FC02-60-960	2-F8	FB01-61-161	3-G11	FB01-61-691	3-K16	FB67-64-049	3-M10	FB01-64-924 02	3-N10	FC02-66-173	4-K5		4-N7
FC01-60-962	2-D8	FB01-61-185B	3-C16		3-N16	H043-64-050	3-M10	FB01-64-924 48	3-N10	FB01-66-174	4-J5	FB02-66-942A	4-L6
		FC01-61-190B	3-F16	FB02-61-691	3-G16	FC01-64-06X	3-M10	H043-64-996A	3-N10	FC01-66-180	4-J5	FB01-66-945	4-L6
**********		FB03-61-191	3-F16	FB03-61-691	3-G16	HF05-64-092	3-M10	H199-64-998	3-C11	FC07-66-180	4-J5	FC01-66-960	4-M6
*	*	FB01-61-211C	3-C16	FB01-61-731	3-K16	FB67-64-10X	3-M10			FC66-66-180	4-J5	FC02-66-960A	4-L6
* 61-000	*	FB03-61-211	3-C16	FB04-61-732	3-N16	FB01-64-161A	3-M10	**********		FC01-66-181	4-J5	FC03-66-960A	4-M6
*	*	FB01-61-212B	3-C16	FB01-61-769	3-G16	FB02-64-161A	3-M10	*	*	FC01-66-182	4-J5	FC04-66-960	4-M6
**********		FB01-61-213	3-C16	FA38-61-883	3-N16	FB67-64-161A	3-M10	* 66-000	*	FC01-66-183	4-K5	FC07-66-960	4-M6
		8871-61-219A	3-C16	FA38-61-884	3-N16	FB01-64-221A02	3-D11	*	*	FB01-66-184	4-K5	FC08-66-960	4-M6
FB01-61-A01	3-E16	FB01-61-220C	3-C16	FA54-61-973	3-K16	FB01-64-221A48	3-D11	**********		FB01-66-201	4-G11	FC09-66-960	4-M6
FB01-61-A02A	3-E16	FB44-61-220A	3-C16			FB01-64-231A02	3-D11			FB01-66-241	4-G5	FC10-66-960	4-M6
FB01-61-A10	3-E16	FB01-61-251A	3-C16	**********		FB01-64-231A48	3-D11	FC03-66-AC0A	4-G6	FB01-66-250	4-G5	FC12-66-960	4-M6
FB01-61-A15	3-E16	FB01-61-252	3-C16	*	*	H002-64-245	4-N9	FC04-66-AC0	4-G6	UB40-66-251	4-G5	FC33-66-960	4-M6
FB01-61-A20	3-E16	FB01-61-256	3-C16	* 62-000	*								
FB01-61-A30A	3-E16	FA38-61-340	3-I16	*	*	FC01-64-250A02	3-K10	FC03-66-AE0	4-I6	FB01-66-310A	4-D6	FC66-66-960A	4-M6
FB01-61-A40	3-E16	FB01-61-439B	4-G11	**********		FC01-64-250A48	3-K10	FC04-66-AF0	4-G6	F046-66-310B	4-D6	FC67-66-960A	4-M6
FB01-61-A60A	3-E16	UE38-61-439	4-G11	FC01-62-020	4-K3	FB01-64-270A02	3-K10	FC66-66-AF0	4-G6	FB44-66-311A	4-D6	F055-66-960	3-K12
FB01-61-A70A	3-E16	FB02-61-450A	4-D3	FC02-62-020	4-K3	FB01-64-270A48	3-K10	FC01-66-AT1	4-H6	FC01-66-311	4-D6	F056-66-960	3-K12
FB01-61-B01	3-G16	FC20-61-450	4-G3	FC73-62-210	4-K3	FC01-64-331	3-D11	FC32-66-AT1	4-I6	B107-66-319	4-D6	FC02-66-968	4-M6
FB01-61-B02A	3-G16	FB01-61-461	3-I16	FB01-62-212	4-K3	FC01-64-340B	3-D11	FC01-66-AT2	4-I6	FC01-66-320A	4-D6	FB01-66-970	4-C7
UB94-61-B10	3-G16	FB02-61-461	3-I16	FB01-62-310D	4-K3	FC66-64-343	4-I5	FC32-66-AT2	4-I6	FC17-66-320A	4-D6	FB03-66-970	4-C7
FC01-61-B16	3-G16	FC20-61-461	3-L16	FB01-62-350E	4-K3	FC07-64-350E	3-D11	FB03-66-AT3	4-G6	FB01-66-330	4-D6	UB42-66-971	4-N7
FC07-61-B16	3-G16	FB02-61-462	3-I16	FB01-62-361B	4-K3	FC07-64-390A	3-D11	FC32-66-AT3	4-G6	FC01-66-34X	4-K5	0222-66-971	3-D9
UB39-61-B40	3-G16	FC20-61-462	3-L16	FB01-62-495	3-D3	FB02-64-410C02	3-D11	FC01-66-AT7	4-G6	FC66-66-34X	4-H5	FC66-66-980A02	4-N6
FB01-61-B60	3-G16	FB04-61-463A	3-L16	FB02-62-496A	4-K3	FB02-64-410C48	3-D11	FC04-66-AT7	4-G6	FB07-66-340	4-G5	FC66-66-980A48	4-N6
FC01-61-C05	3-F16	FB01-61-464B	3-I16	FB01-62-615	4-K3	FC01-64-410B02	3-F11	HE02-66-A3X	4-K6	8AF3-66-340	4-D6	FB01-66-991B	4-C7
FB01-61-J01	4-I3	FB01-61-465A	3-I16	8BF1-62-620B	4-K3	FC01-64-410B48	3-E11	FB01-66-A3Y	4-K6	8AF4-66-340	4-D6	FB01-66-994A	4-C7
FB04-61-J01	4-J3	FB04-61-465B	3-L16	8BF7-62-620	4-K3	FC02-64-410B02	3-E11	FB67-66-A3Y	4-K6	FC01-66-350B	4-L5		
FB01-61-J02	4-I3	FB01-61-466C	3-I16	FB01-62-625	4-K3	FC02-64-410B48	3-E11	FB01-66-A30	4-K6	FC01-66-361	4-D6	**********	
FB04-61-J02	4-J3	FB04-61-466C	3-L16	FB01-62-626	4-L3	FC01-64-43Y	3-E11	FB67-66-A30	4-K6	B258-66-365	2-J8	*	*
FB01-61-J10	4-I3	FB01-61-467A	3-I16	FB01-62-761C	4-L3	FB01-64-430	3-E11	FB01-66-A32	4-K6	UB40-66-365	4-D6	* 67-000	*
FB04-61-J10	4-J3	FB06-61-467C	3-L16	FB01-62-8A1A	4-L3	FB01-64-44X	3-E11	FB01-66-A35	4-K6	FC01-66-370B	4-L5	*	*
B111-61-J14	4-I3	FB44-61-467C	3-I16	FB01-62-865A	4-L3	FB01-64-440B02	3-E11	FB67-66-A35	4-K6	F044 66-4B0	4-G5	**********	
						FB01-64-440B48	3-E11	FB01-66-A9X	4-L6	FB01-66-4D0	2-J8		

FC66-67-BW1A	4-F7	FB01-67-4C0B	4-D8			FB67-68-29XB02	4-D9	FC04-68-450B02	3-D15	FB67-68-665	4-J10	FB01-68-864 02	4-G10
FC01-67-SH0D	4-K7	FB01-67-4T0D	4-D8	**********		FB67-68-29XB48	4-D9	FC04-68-450B48	3-D15	FB03-68-666A	4-F10	FB01-68-864 48	4-G10
FC07-67-SH0D	4-K7	FB01-67-4T0E	4-D8	*	*	FC01-68-3D1 02	4-H9	FC06-68-450B02	3-D15		4-J10	B003-68-865 65	4-G10
FC04-67-010G	4-D7	FB02-67-402A	4-I8	* 68-000	*	FC01-68-3E1 02	4-H9	FC06-68-450B48	3-D15	FB03-68-667A	4-F10		4-L10
FC09-67-010G	4-D7	FB02-67-406	4-I8	*	*	FC01-68-3E3A	4-H9	FC17-68-450B02	3-E15		4-J10	B003-68-865	4-G10
FC18-67-010F	4-D7	FB03-67-406	4-J8	**********		FC01-68-3P0A02	4-K9	FC17-68-450B48	3-E15	FC02-68-671A02	4-F10		4-L10
FC66-67-010E	4-F7	FB02-67-408A	4-J8			FC01-68-3P0A48	4-K9	FC17-68-450C02	3-E15	FC02-68-671A48	4-F10	B003-68-865 65	4-G10
FC67-67-010E	4-F7	FC01-67-421	4-H8	FC01-68-AD1A	4-E9	FC01-68-3S0A02	4-K9	FC17-68-450C48	3-E15	FC04-68-671A02	4-F10		4-L10
FB01-67-012	4-N7	FB02-67-450A	4-H8	FC01-68-C11B	4-D10	FC01-68-3S0A48	4-K9	FC33-68-450B02	3-I15	FC04-68-671A48	4-F10	B006-68-865	3-G4
S083-67-012A	3-F9	FB02-67-451	4-K8	FB67-68-G01	4-I10	FC01-68-301A	4-H9	FC33-68-450B48	3-I15	FC66-68-671 02	4-J10	B040-68-865A00	4-J9
FB01-67-014	4-N7	FB02-67-458B	4-H8	FB67-68-0D1 02	4-N8	FC01-68-310D02	4-H9	F061-68-450B02	3-D15	FC66-68-671 48	4-J10	B040-68-865A48	4-J9
FB02-67-019A	4-N7	FB02-67-480A	4-H8	FB67-68-0D1 48	4-N8	FC01-68-310D48	4-H9	F061-68-450B48	3-D15	FB67-68-673 02	4-J10	B042-68-865 00	4-L4
FB01-67-021	3-G10	FB01-67-481	4-E8	FB67-68-0E1 02	4-N8	FB01-68-370 02	4-H9	FB67-68-452	3-K15	FB67-68-673 48	4-J10	B102-68-865 00	4-D10
FC01-67-030D	4-K7	FB02-67-481	4-I8	FB67-68-0E1 48	4-N8	FB01-68-370 48	4-H9	FB01-68-453 02	3-E15	B100-68-675 02	4-D9		4-I10
FC07-67-030D	4-K7	FB01-67-482B	4-E8	B102-68-C12	4-L8	FB67-68-370 02	4-L9		3-J15	B100-68-675 48	4-D9	B102-68-865 48	4-D10
FC66-67-030B	4-K7	FB01-67-483	4-E8	FB01-68-020 02	4-L8	FB67-68-370 48	4-L9	FB01-68-453 48	3-E15	FB67-68-678	4-F10		4-I10
FC67-67-030B	4-K7	FB04-67-485	4-E8	FB01-68-020 48	4-L8	FB01-68-390 02	4-H9		3-J15		4-J10	B235-68-865A	4-H10
UB42-67-031	4-N7	FB01-67-488A	4-D8	FB67-68-020A02	4-N8	FB01-68-390 48	4-H9	FB67-68-456	3-J15	FC02-68-679 02	4-F10		4-J9
FC04-67-050F	4-D7	FB01-67-5A0A	4-G5	FB67-68-020A48	4-N8	FB67-68-390 02	4-L9	FB67-68-457 02	3-J15	FC02-68-679 48	4-F10		4-L10
FC18-67-050F	4-D7	FB01-67-500C	4-D8	FB67-68-03XB02	4-N8	FB67-68-390 48	4-L9	FB67-68-457 48	3-J15	FB01-68-691D02	4-F10		4-M9
FC66-67-050B	4-F7	FB02-67-500	4-H8	FB67-68-03XB48	4-N8	FC04-68-4E0B02	3-C15	FC04-68-463 02	3-E15		4-J10	FB67-68-865 09	4-M9
B001-67-051	4-N7	FB04-67-500B	4-H8	FC01-68-030 02	4-L8		3-I15		3-J15	FB01-68-691D48	4-G10	GJ12-68-865	4-D9
FB01-67-051	2-G8	FB01-67-501C	4-D8	FC01-68-030 48	4-L8	FC04-68-4E0B48	3-C15	FC04-68-463 48	3-E15		4-J10		4-F9
UB42-67-051	4-N7	H001-67-502	4-D8	FC03-68-030 02	4-L8		3-I15		3-J15	FC66-68-693 02	4-J10	G032-68-865A00	4-G10
W029-67-051A	4-N7	H261-67-502	4-D8	FC03-68-030 48	4-L8	FC01-68-4H0A02	3-C15	FB01-68-47X 02	3-F15	FC66-68-693 48	4-J10		4-J9
8545-67-052	3-C11	SA70-67-502	4-I8	FC04-68-030 02	4-L8	FC01-68-4H0A48	3-C15		3-K15	FB01-68-710A02	4-H9		4-K10
FB02-67-056	4-H8	S013-67-502	4-I8	FC04-68-030 48	4-L8	FC04-68-4Q0B02	3-C15	FB01-68-47X 48	3-F15	FB01-68-710A48	4-H9	G032-68-865A09	4-K10
FB02-67-057	4-H8	S084-67-502	4-D8	FB67-68-032 02	4-N8		3-I15		3-K15	FB67-68-710 02	4-L9		4-M9
F055-67-06YB	4-F7	S092-67-502	3-K3	FB67-68-032 48	4-N8	FC04-68-4Q0B48	3-C15	FB67-68-505B	4-I11	FB67-68-710 48	4-L9	G032-68-865A48	4-G10
FB01-67-060B	4-E7	4116-67-502	4-D8	FB01-68-040 02	4-L8		3-I15	FB67-68-520E02	4-I11	B003-68-712	4-I9		4-J9
FB02-67-060B	4-E7		4-I8	FB01-68-040 48	4-L8	B100-68-401	3-C15	FB67-68-520E48	4-I11	B235-68-712	4-L9		4-L10
FB67-67-060A	4-L4	FB01-67-503B	4-D8	FB01-68-042	4-L8		3-I15	FC01-68-520A02	4-I11	B235-68-719	4-L9	G043-68-865B00	4-G10
G001-67-061	4-N6	FB02-67-503A	4-E8	0810-68-070E	4-M10	FA54-68-402	3-C15	FC01-68-520A48	4-I11	FA54-68-719B	4-I11		4-K10
FC01-67-070F	4-H7	FB04-67-503A	4-D8	F057-68-071	4-M10		3-I15	FB67-68-523	4-I11	FB01-68-719	4-I11		4-N6
FC07-67-070F	4-H7	FB01-67-504A	4-E8	FB67-68-095A	4-N8	FB01-68-403	3-H15	FC01-68-524 02	4-I11	H001-68-719B	4-F9	G043-68-865B48	4-G10
FC17-67-070G	4-H7	G043-67-506	3-D9	FC01-68-1A0B02	4-E9		3-N14	FC01-68-524 48	4-I11		4-I9		4-K10
FC66-67-070B	4-J7	G033-67-509	4-I8	FC01-68-1A0B48	4-E9	FB01-68-413	3-C15	FB67-68-550E02	4-I11	FB01-68-720A02	4-I9	G045-68-865 00	4-L11
FC67-67-070B	4-J7	G044-67-509	4-I8	FC01-68-1B0B02	4-E9		3-I15	FB67-68-550E48	4-I11	FB01-68-720A48	4-I9	H002-68-865	4-F9
N351-67-071A	2-F8	FB01-67-510	4-E8	FC01-68-1B0B48	4-E9	FB01-68-414	3-C15	FC01-68-550A02	4-I11	FB67-68-720 02	4-L9		4-G9
FC01-67-072A	4-C8	FB02-67-510	4-H8	FC01-68-1C0A02	4-E9		3-I15	FC01-68-550A48	4-I11	FB67-68-720 48	4-L9		4-J9
GC77-67-072	3-C11	FB01-67-517	4-I8	FC01-68-1C0A48	4-E9	FB01-68-415	3-C15	FC01-68-6H1B02	4-D10	FB67-68-8C1 02	4-K10		4-J11
HE20-67-072	4-C8	FB01-67-519A	4-E8	FC01-68-1D0A02	4-E9		3-I15	FC01-68-6H1B48	4-D10	FB67-68-8C1 48	4-K10		4-L8
FB01-67-073A	4-C8	H260-67-519A	3-E6	FC01-68-1D0A48	4-E9	FC04-68-420B02	3-D15	FC01-68-6K1B02	4-D10	FB67-68-8C2	4-J11		4-N8
H261-67-073	4-C8		4-D8	FB01-68-151 02	4-E9	FC04-68-420B48	3-D15	FC01-68-6K1B48	4-D10		4-K10	S049-68-865 00	3-G3
FB01-67-099	4-H7	FB02-67-520A	4-I8		4-L8	FC06-68-420B02	3-D15	FC01-68-6L1	4-D10	FC01-68-8S0 02	4-I9		4-D9
	4-J7	FC01-67-560	4-M5	FB01-68-151 48	4-E9	FC06-68-420B48	3-D15	FC01-68-6L2	4-D10	FC01-68-8S0 48	4-I9		4-J9
FC01-67-099	4-H7	FC66-67-560A	4-M5		4-L8	FC17-68-420B02	3-D15	B100-68-615	3-C7	G225-68-8X2	4-N8		4-M9
	4-J7	FB01-67-564	4-M5	UB39-68-153	4-E9	FC17-68-420B48	3-D15		4-D10	UB39-68-805	3-F15	S049-68-865 48	4-D9
H115-67-099	4-H7	FC01-67-564	4-M5	FB01-68-155	4-E9	FC17-68-420C02	3-D15		4-I10		3-K15		4-J9
	4-J7	FC66-67-564	4-M5	FB67-68-160A02	4-G9	FC17-68-420C48	3-D15	FB02-68-620A	4-D10	FC02-68-81XA02	4-G10		4-M9
FC01-67-100C	4-E7	FC01-67-566	4-M5	FB67-68-160A48	4-G9	FC33-68-420B02	3-I15	FB04-68-620A	4-D10	FC02-68-81XA48	4-G10	S083-68-865A00	4-H10
FC03-67-100C	4-E7	FC01-67-567	4-M5	FC01-68-160C02	4-E9	FC33-68-420B48	3-I15	FB67-68-620	4-I10	FC04-68-81XA02	4-G10		4-J9
FC33-67-100	4-G7	FC01-67-568	4-M5	FC01-68-160C48	4-E9	F061-68-420B02	3-D15	FB01-68-622	4-D10	FC04-68-81XA48	4-G10	S083-68-865A09	4-L10
FC04-67-190F	4-L7	FB01-67-569	4-M5	FB67-68-170A02	4-G9	F061-68-420B48	3-D15		4-I10	FB67-68-810D02	4-K10		4-M9
FC33-67-190F	4-L7	NA01-67-7F0A	4-M5	FB67-68-170A48	4-G9	FB67-68-422	3-K15	FD01-68-624	4-D10	FB67-68-810D48	4-K10	S083-68-865A48	4-H10
FC04-67-200F	4-L7	NA01-67-7G0A	4-M5	FC01-68-170C02	4-F9	FB01-68-423 02	3-E15	FB01-68-625	4-D10	FC01-68-814	4-F10		4-J9
FC33-67-200F	4-L7	B311-67-740	4-M5	FC01-68-170C48	4-F9		3-I15	FB01-68-632	4-E10	FC02-68-814	4-F10		4-L10
FB55-67-230E	2-L9	H270-67-740	4-E5	FC01-68-190A02	4-F9	FB01-68-423 48	3-E15	FB01-68-636A	4-E10	FB67-68-81[illegible]	4-K10	S083-68-865A	4-G10
FB01-67-240A	4-E7	H320-67-740	4-E5	FC01-68-190A48	4-F9		3-I15	FB01-68-637	4-E10	1011-68-815	3-E13		4-L10
8871-67-242	4-G7	H430-67-740	3-N16	FB67-68-201	4-C9	FB01-68-425 02	3-H15	FB01-68-642	4-E10		3-F13	S083-68-865A00	4-H10
S083-67-253	4-C8		4-E5	FB67-68-21XC02	4-C9		3-N14	FB01-68-646A	4-E10	FC33-68-82XA07	4-K10	S083-68-865A09	4-L10
S113-67-254A	4-C8		4-M5	FB67-68-21XC48	4-C9	FB01-68-425 48	3-H15	FB01-68-647	4-E10	FB67-68-831B07	4-J10	S083-68-865A48	4-H10
FB01-67-280C	4-I7	H432-67-740	4-M5	FC01-68-210A02	4-F9		3-N14	FB01-68-652	4-E10	FB67-68-832	4-K10		4-L10
	4-J7	H440-67-740	4-M5	FC01-68-210A48	4-F9	FB67-68-426	3-J15		4-I10	FB67-68-845 02	4-K10	FB01-68-866	4-H10
FB01-67-304	4-F8	H320-67-742	4-E5	G030-68-213B	4-L8	FB01-68-427 02	3-F15	FB01-68-653	4-E10	FB67-68-845 48	4-K10		4-L10
FB01-67-321B	4-F8	H311-67-744	4-F5	B100-68-215A	4-F9		3-K15		4-I10	FB01-68-85X	4-I9	G031-68-866B	4-H10
FB02-67-321A	**4-F8**	**FC01-67-780A**	**4-N5**	**0208-68-230**	**4-M10**	**FB01-68-427 48**	**3-F15**	**FB01-68-658**	**4-E10**		**4-L9**		**4-L10**
FB02-67-330	**4-H8**	**FC33-67-830**	**4-N5**	**FB67-68-24YA02**	**4-C9**		**3-K15**	**FB03-68-658**	**4-E10**	**FC01-68-85Y 02**	**4-I9**	**FB01-68-868 02**	**4-K9**
HE76-67-330A	4-F8	FC01-67-880A	4-N5	FB67-68-24YA48	4-C9	FB67-68-427 02	3-J15	FB67-68-658A	4-I10	FC01-68-85Y 48	4-I9	FB01-68-868 48	4-K9
FB02-67-331	4-I8	FC33-67-9A1	4-N5	FB67-68-25YA02	4-C9	FB67-68-427 48	3-J15	FB67-68-66Y	4-I10	FC04-68-85Y 02	4-I9	FC01-68-87Y 02	4-I9
HE76-67-331A	4-F8	FC66-67-9A2	4-N5	FB67-68-25YA48	4-C9	G033-68-432	3-E15	FB03-68-661A	4-E10	FC04-68-85Y 48	4-I9	FC01-68-87Y 48	4-I9
FB06-67-350	4-F8	FC66-67-9A3	4-N5	FB67-68-261B02	4-C9		3-J15		4-I10	FB01-68-852	4-I9	FC04-68-87Y 02	4-J9
FB05-67-351	4-G8	FB01-67-980E	4-I7	FB67-68-261B48	4-C9	FC04-68-433 02	3-E15	F046-68-661B	4-E10		4-L9	FC04-68-87Y 48	4-J9
GJ83-67-354	4-G8		4-J7	FB67-68-271B02	4-C9		3-J15	F046-68-662A	4-E10	FB01-68-853	4-F9	FB01-68-870 02	4-J9
FB01-67-360C	4-F8			FB67-68-271B48	4-C9	FC04-68-433 48	3-E15	FB01-68-663	4-E10	FB02-68-853	4-D9	FB01-68-370 48	4-J9
FB01-67-361	4-F8			B100-68-279	4-C9		3-J15		4-I10		4-I9	FB67-68-871 07	4-M9
FB01-67-362	4-F8			FB67-68-28XB02	4-C9	FB01-68-44X 02	3-F15	FB03-68-663	4-F10	FB01-68-860 02	4-J9	FB01-68-878 02	4-K9
FB01-67-363	4-F8			FB67-68-28XB48	4-C9		3-J15	FB01-68-664	4-F10	FB01-68-860 48	4-J9	FB01-68-878 48	4-K9
FB01-67-364	4-F8			F367-68-285 02	4-D9	FB01-68-44X 48	3-F15		4-J10	FB67-68-861 07	4-L9	GJ21-68-885B02	3-N13
FB02-67-366A	4-H8			FB67-68-285 48	4-D9		3-J15	FB03-68-664	4-F10	FB03-68-862	4-G10		4-D9

GJ21-68-885B48 3-N13
4-D9
G030-68-885C00 4-H10
4-L10
UB54-68-885 00 4-F9
4-J11
4-M8
UB54- 8-885 48 4-F9
4-J11
FB67-68-891B07 4-M9
FB01-68-893 02 4-H10
FB01-68-893 48 4-H10
FB01-68-894B02 4-K9
FB01-68-894B48 4-K9
FB01-68-895B02 4-K9
FB01-68-895B48 4-K9
FB01-68-911 02 3-J13
FB01-68-911 48 3-J13
FB67-68-911C02 3-N13
FB67-68-911C48 3-N13

FB01-68-912 02 3-J13
FB01-68-912 48 3-J13
FB67-68-912C02 3-N13
FB67-68-912C48 3-N13
FB67-68-921A02 3-N13
FB67-68-921A48 3-N13
FB67-68-922A02 3-N13
FB67-68-922A48 3-N13
G030-68-964C02 3-F15
3-K15
G030-68-964C48 3-F15
3-K15

****
* *
* 69-000 *
* *
****

UB40-69-C61 4-G11

FA03-69-C72A 4-H11
FB01-69-D21A 4-G11
FB01-69-D21B 4-G11
FB05-69-014A 4-G11
FC01-69-014A 4-G11
FC17-69-014A 4-G11
N3B1-69-036 4-H11
N3B2-69-036A 4-H11
N350-69-036B 4-H11
N351-69-036B 4-H11
N370-69-036B 4-H11
N371-69-036B 4-H11
N350-69-044B 4-H11
N370-69-044B 4-H11
FA01-69-064A 4-H11
GA02-69-068 4-H11
NA01-69-068 4-H11
NA01-69-068A 4-H11
FA02-69-073A 4-G11
FB35-69-074A 4-G11

F045-69-108A 4-E11
4-N10
FC01-69-110 PZ 4-E11
4-N10
FC01-69-110 SQ 4-E11
4-N10
FC01-69-110 UC 4-E11
4-N10
FC01-69-110 5N 4-E11
4-N10
F045-69-112A 4-E11
4-N10
G032-69-126 4-E11
4-N10
FC01-69-170 PZ 4-E11
4-N10
FC01-69-170 SQ 4-E11
4-N10
FC01-69-170 UC 4-E11
4-N10
FC01-69-170 5N 4-E11
4-N10
F045-69-172A 4-E11
4-N10
FB35-69-220F00 4-N10
FB68-69-220B02 4-E11
FB68-69-220B48 4-E11
FB67-69-233 4-F11
FB10-69-240 4-C11
FB67-69-240 02 4-F11
FB67-69-240 48 4-F11
FB10-69-244 4-C11
FB67-69-245 4-F11
FB67-69-247 4-F11
FB67-69-248 4-F11
FB01-69-261 02 4-C11
FB01-69-261 48 4-C11
FB03-69-261 02 4-C11
FB03-69-261 48 4-C11
H260-69-261 02 4-F11

H260-69-261 48 4-F11
FB01-69-262 02 4-C11
FB01-69-262 48 4-C11
FB03-69-262 02 4-C11
FB03-69-262 48 4-C11
FB67-69-270A02 4-E11
FB67-69-270A48 4-F11
FC02-69-270 02 4-N10
FC02-69-270 48 4-N10
FC04-69-270 02 4-C11
FC04-69-270 48 4-C11
FC01-69-320 02 4-C11
FC01-69-320 48 4-C11
FC03-69-320 02 4-C11
FC03-69-320 48 4-C11
FC66-69-320A02 4-F11
FC66-69-320A48 4-F11
B316-69-361 3-F15
3-K15
FB01-69-370 02 3-F15
3-K15
FB01-69-370 48 3-F15
3-K15
FB01-69-390 02 3-G15
3-K15
FB01-69-390 48 3-G15
3-K15
FB01-69-531 02 4-D11
FB01-69-531 48 4-D11
FC01-69-542 4-C11
FA54-69-571 00 4-D11
FA54-69-571 48 4-D11
FB67-69-571 4-F11
FA54-69-572 00 4-D11
FA54-69-572 48 4-D11
FB67-69-572 4-F11
FB01-69-650A 4-M10
FB01-69-670A 4-M10
FB01-69-697A 4-H10
4-L10

FC01-69-760A03 4-N9
FC01-69-760A49 4-N9
FB01-69-762 03 4-N9
FB01-69-762 49 4-N9
FB01-69-774 07 4-N9
FB01-69-774 48 4-N9
FB01-69-775 07 4-N9
FB01-69-775 48 4-N9
FB01-69-776 4-N9
FB01-69-780 03 4-N9
FB01-69-780 49 4-C10
FB01-69-782A03 4-C10
FB01-69-782A49 4-C10
FB03-69-8H2A 4-D4
FB03-69-8H3A 4-D4
FB03-69-8H4 4-D4
FB03-69-8H5 4-D4
FB03-69-8H6 4-D4
FB03-69-810H 4-D4
FB03-69-831J 4-E4
FB03-69-832C 4-D4
FB03-69-833C 4-D4
FB03-69-838C 4-D4
FB03-69-839C 4-D4
FB03-69-842A 4-E4
FB03-69-843A 4-E4
FB03-69-844A 4-E4
FB03-69-845 4-E4
FB03-69-846B 4-E4
FB03-69-847B 4-E4
FB03-69-848B 4-E4
FB03-69-849 4-E4
FB03-69-857A 4-E4
FB03-69-858 4-E4
FB03-69-860C02 4-E4
FB03-69-860C48 4-E4
FB03-69-865 4-E4
FB03-69-866 4-F4
FB01-69-87X 3-K5
FB02-69-870A02 3-K5

FB02-69-870A48 3-K5
FB03-69-870A02 3-K5
FB03-69-870A48 3-K5
FB01-69-872 02 3-K5
FB01-69-872 48 3-K5
FB01-69-873 3-K5
FB03-69-873 4-D4
FB01-69-874 3-K5
FB03-69-885 4-F4
FB03-69-891A 4-F4
FB03-69-892A 4-G4
FB03-69-895B 4-F4
FB03-69-895C 4-F4
FB03-69-896A 4-F4
FB03-69-897 4-F4
FB03-69-898 02 4-F4
FB03-69-898 48 4-F4
FB03-69-9W4 4-F4
FB03-69-9W5 4-F4
FB03-69-9W6 4-F4

FB03-69-9W7 4-F4
FB03-69-9W8 4-F4
FB03-69-9W9 4-G4
FB03-69-915A02 4-D4
FB03-69-915A48 4-D4
FB03-69-923 4-G4
FB03-69-925A 4-G4
FB03-69-927 4-G4
FB03-69-928 4-D4

****
* *
* 70-000 *
* *
****

FB01-70-020 3-I7
FB67-70-020C 3-C8
FC01-70-050 3-H7
FC03-70-050 3-H7

FC01-70-052 3-I7
FC01-70-100C 3-H7
FC33-70-100A 3-N7
FB01-70-112A 3-H7
3-N7
FB67-70-113 3-N7
FC01-70-113 3-H7
FB01-70-114A 3-I7
FB67-70-114 3-N7
FB01-70-118A 3-I7
3-N7
FB01-70-119A 3-I7
FB67-70-130D 3-N7
FB67-70-150D 3-N7
FC01-70-150B 3-I7
FB67-70-160B 3-N7
FB67-70-169A 3-N7
FCY1-70-200A 3-I7
FCY1-70-200B 3-I7
FBY1-70-210C 3-K7
FBY1-70-210D 3-L7
FB01-70-210E 3-H7
FB67-70-210A 3-F8
FB01-70-220D 3-I7
FB67-70-220C 3-F8
FB67-70-222A 3-C8
FB67-70-230C 3-N7
FB67-70-240B 3-C8
FC01-70-240B 3-I7
FB67-70-246B 3-M7
FBY1-70-251 3-I7
FBY1-70-251A 3-I7
FB67-70-260 3-C8
FC33-70-270 3-C8
FC89-70-270 3-C8
FCY1-70-271A 3-I7
FCY1-70-271B 3-I7
FB67-70-272 3-C8
FB01-70-273 3-I7
FB01-70-321A 3-J7

FCY1-70-400 3-L7
FCY1-70-400A 3-L7
FC33-70-400 3-F8
FC89-70-400 3-F8
FB67-70-420 3-C8
FB67-70-441A 3-C8
FB67-70-491A 3-C8
8871-70-491 2-G8
FB67-70-500D 3-C8
FB67-70-512 3-C8
FC01-70-601 3-G8
FC03-70-601 3-G8
FB01-70-609A 3-G8
FB01-70-610L 3-G7
FB67-70-610E 3-G7
FB01-70-613B 3-G7
FB03-70-630E 3-G8
FB67-70-631B 3-N7
FB01-70-640A 3-G8
FB67-70-640A 3-D8

FB67-70-654 3-D8
FB67-70-690A 3-D8
FC01-70-700 3-G8
FC01-70-75X 3-J7
FC33-70-750A 3-D8
FB67-70-752 3-D8
FB01-70-760C 3-J7
FB01-70-77X 3-J7

****
* *
* 71-000 *
* *
****

FB01-71-020 3-K7
FB67-71-020C 3-E8
FC01-71-050 3-J7
FC03-71-050 3-J7
FC01-71-052 3-K7

FC01-71-100C 3-J7
FC33-71-100A 3-D8
FB01-71-112D 3-D8
3-J7
FB67-71-113 3-D8
FC01-71-113 3-J7
FB01-71-114A 3-J7
FB67-71-114 3-D8
FB01-71-118A 3-D8
3-J7
FB01-71-119A 3-J7
FB67-71-130D 3-D8
FB67-71-150D 3-D8
FC01-71-150B 3-J7
FB67-71-160B 3-D8
FB67-71-169A 3-E8
FCY1-71-200A 3-K7
FCY1-71-200B 3-K7
FBY1-71-210C 3-L7
FBY1-71-210D 3-L7
FB01-71-210F 3-J7
FB67-71-210A 3-F8
FB01-71-220D 3-K7
FB67-71-220C 3-F8
FB67-71-222A 3-E8
FB67-71-230C 3-D8
FB67-71-240B 3-E8
FC01-71-240B 3-K7
FB67-71-246B 3-M7
FBY1-71-251 3-K7
FBY1-71-251A 3-K7
FB67-71-260 3-E8
FC33-71-270 3-E8
FC89-71-270 3-E8
FCY1-71-271A 3-K7
FCY1-71-271B 3-K7
FB67-71-272 3-E8
FB01-71-273 3-K7
FB01-71-321A 3-K7
FCY1-71-400 3-L7

FCY1-71-400A 3-L7
FC33-71-400 3-F8
FC89-71-400 3-F8
FB67-71-420 3-E8
FB67-71-441A 3-E8
FB67-71-491A 3-E8
FB67-71-512 3-E8
FB01-71-613B 3-G7
FB67-71-654 3-F8
FB67-71-690A 3-F8
FB01-71-760B 3-K7
FB01-71-771A 3-K7

****
* *
* 72-000 *
* *
****

H043-72-411 3-C14
3-I14

****
* *
* 75-000 *
* *
****

1907-75-102A 3-I10
3625-75-139 3-C10
3-H10

****
* *
* 76-000 *
* *
****

0208-76-071 4-H10
4-L10

FB02-76-190 3-E3
FA55-76-196 3-F16
HA43-76-201A 3-E3
H043-76-201 3-D3
HA43-76-202 3-D3
FB01-76-210B 3-D3
FB01-76-220B 3-D3
FB68-76-230 3-D3
FB02-76-250 02 3-D3
FB02-76-250 48 3-D3
FB01-76-260 3-E3
FC01-76-290 3-E3
FC07-76-290 3-E3
FC07-76-290A 3-E3
FC66-76-290 3-E3
FC66-76-290A 3-E3
FC67-76-290 3-E3
FC67-76-290A 3-E3
8871-76-420 3-E16
G030-76-448 3-H14
G030-76-448 3-L14
4-M3
FA55-76-455 3-H16
8871-76-456 3-G16
FA55-76-474 3-G16
D001-76-605 4-H8
D001-76-605A 4-H8
B002-76-619A 4-K8
H043-76-619A 4-G8
B092-76-623 4-G8
B093-76-641 4-I8
B094-76-662 4-G8
B094-76-663 4-G8
8532-76-672 4-I8
G030-76-673A 4-I8
1243-76-674 3-K3
1273-76-704 4-I3
B001-76-725 4-E3
B001-76-726 4-E3
B001-76-727 4-E3

B001-76-728 4-E3
B001-76-729 4-E3
B001-76-731 4-E3
B001-76-732 4-F3
B001-76-734 4-E3
FA54-76-893A 4-D3
FA54-76-896 4-F3
B001-76-897 4-E3
FA54-76-897 4-F3
FA54-76-898 4-D3
FA54-76-899 4-D3
FA54-76-902 4-D3
FA54-76-904 4-D3
FA54-76-905 4-E3
B001-76-908 4-E3
FA54-76-909 4-D3

****
* *
* 88-000 *
* *
****

B001-88-081 02 3-K11
3-K12
B001-88-081 48 3-K11
3-K12
B001-88-091 02 3-K11
3-K12
B001-88-091 48 3-K11
3-K12
FB01-88-101 3-K11
3-L12
FC01-88-102A 3-K11
FC34-88-102A 3-L12
FC34-88-103 3-L12
FC50-88-103 3-K11
F001-88-105 3-L11
3-L12
FB67-88-105 3-L12
F062-88-106 3-L11
3-L12
FB01-88-107 3-L11
FB67-88-107 3-L12
H115-88-108 3-L11
3-L12
B095-88-109 3-L11
3-L12
FB44-88-109 3-L11
3-L12
FB69-88-110 02 3-L12
FB69-88-110 48 3-L12
FCX7-88-110B02 3-L11
FCX7-88-110B48 3-L11
FCY4-88-110A02 3-L11
FCY4-88-110A48 3-L11
FCY5-88-110 02 3-L11
FCY5-88-110 48 3-L11
FC11-88-110A02 3-M11
FC11-88-110A48 3-M11
FC13-88-110A02 3-M11
FC13-88-110A48 3-M11
FB69-88-111 02 3-M12
FB69-88-111 48 3-M12
FC01-88-111A02 3-M11
FC01-88-111A48 3-M11
FC03-88-111A02 3-M11
FC03-88-111A48 3-M11
FC70-88-111A02 3-M11
FC70-88-111A48 3-M11
FB44-88-112 3-M12
FC01-88-112 3-M11
FC03-88-112 3-M11
FB68-88-113 3-M12
FC11-88-113A 3-M11
FC13-88-113A 3-M11
FB68-88-115 3-N12
3966-88-116 3-K11
3-K12
1243-88-117 3-M12
3-N11

FC11-88-127A02 3-M11
FC11-88-127A48 3-M11
F044-88-127A02 3-M12
F044-88-127A48 3-M12
FB46-88-130 02 3-N11
FB46-88-130 48 3-N11
FC01-88-130 02 3-N11
FC01-88-130 48 3-N11
FC03-88-130 02 3-N11
FC03-88-130 48 3-N11
FC07-88-130 02 3-N11
FC70-88-130 02 3-N11
FC70-88-130 48 3-N11
FC72-88-130 02 3-M12
FC72-88-130 48 3-M12
FB46-88-131 02 3-N11
FB46-88-131 48 3-N11
FC01-88-131 02 3-N11
FC01-88-131 48 3-N11

FC03-88-131 02 3-N11
FC03-88-131 48 3-N11
FC07-88-131 02 3-C12
FC07-88-131 48 3-C12
FC70-88-131 02 3-C12
FC70-88-131 48 3-C12
FC72-88-131 02 3-M12
FC72-88-131 48 3-M12
FB44-88-132 3-C12
FC01-88-132 3-C12
FC03-88-132 3-C12
FC01-88-133 3-C12
FC03-88-133 3-C12
FB69-88-140 02 3-L12
FB69-88-140 48 3-L12
FC03-88-140 02 3-L11
FC03-88-140 48 3-L11
FC70-88-140 02 3-L11
FC70-88-140 48 3-L11
FB69-88-141 02 3-M12

FB69-88-141 48 3-M12
FC03-88-141 02 3-C12
FC03-88-141 48 3-C12
FC70-88-141 02 3-C12
FC70-88-141 48 3-C12
FB01-88-151 3-D12
3-N12
FC01-88-152 3-D12
3-N12
FC03-88-152 3-D12
FC01-88-153 3-D12
FC03-88-153 3-D12
FC34-88-153 3-N12
FCX7-88-160A02 3-D12
FCX7-88-160A48 3-D12
FCY5-88-160 02 3-D12
FCY5-88-160 48 3-D12
FC11-88-160A02 3-D12
FC11-88-160A48 3-D12
FC13-88-160A02 3-D12

FC13-88-160A48	3-D12	
FC70-88-160 02	3-D12	
FC70-88-160 48	3-E12	
FC72-88-160 02	3-N12	
FC72-88-160 48	3-N12	
FB69-88-161 02	3-N12	
FB69-88-161 48	3-N12	
C01-88-161A02	3-E12	
FC01-88-161A48	3-E12	
FC03-88-161A02	3-E12	
FC03-88-161A48	3-E12	
FC70-88-161A02	3-E12	
FC70-88-161A48	3-E12	
FB44-88-162	3-N12	
FC01-88-162	3-E12	
FC03-88-162	3-E12	
FC13-88-163A	3-E12	
FC34-88-163	3-N12	
FC11-88-177A02	3-E12	
FC11-88-177A48	3-E12	
FC13-88-177 02	3-E12	
FC13-88-177 48	3-E12	
F044-88-177A02	3-N12	
F044-88-177A48	3-N12	
FB46-88-180 02	3-F12	
FB46-88-180 48	3-F12	
FB69-88-180 02	3-N12	
FB69-88-180 48	3-N12	
FC01-88-180 02	3-F12	
FC01-88-180 48	3-F12	
FC03-88-180 02	3-F12	
FC03-88-180 48	3-F12	
FC07-88-180 02	3-F12	
FC07-88-180 48	3-F12	
FC70-88-180 02	3-F12	
FC70-88-180 48	3-F12	
FB46-88-181 02	3-F12	
FB46-88-181 48	3-F12	
FB69-88-181 02	3-N12	
FB69-88-181 48	3-N12	
FC01-88-181 02	3-F12	
FC01-88-181 48	3-F12	
FC03-88-181 02	3-F12	
FC03-88-181 19	3-F12	
FC03-88-181 48	3-F12	
FC07-88-181 02	3-F12	
FC07-88-181 48	3-G12	
FC70-88-181 02	3-G12	
FC70-88-181 48	3-G12	
FC01-88-183	3-G12	
FC03-88-183	3-G12	
FC01-88-312	3-G12	
FC01-88-313A	3-G12	
FB46-88-330 02	3-G12	
FB46-88-330 48	3-G12	
FC07-88-330 02	3-G12	
FC07-88-330 48	3-G12	
FB46-88-331 02	3-G12	
FB46-88-331 48	3-G12	
FC07-88-331 02	3-G12	
FC07-88-331 48	3-G12	
FB68-88-335	3-M12	
FA58-88-336	3-C13	
	3-H12	
FC01-88-362	3-H12	
FC03-88-362A	3-H12	
FC01-88-363A	3-H12	
FC03-88-363A	3-H12	
FB03-88-385 02	3-H12	
FB03-88-385 48	3-H12	
FB03-88-386 02	3-H12	
FB03-88-386 48	3-I12	
B092-88-519	3-C13	
	3-H12	
FB03-88-815	3-H12	
B092-88-818	3-C13	
	3-H12	
B093-88-818	3-K11	
FA58-88-831 02	3-C12	
FA58-88-831 48	3-C12	

F044-88-833	3-C13	
	3-I12	
BA49-88-860	3-I12	
FB68-88-970	3-C13	
**********		
* *		
* 90-000 *		
* *		
**********		
90620-17635	2-K6	
90620-17636	2-K6	
90620-35706	2-K6	
90620-65706	2-K6	
90620-66705	2-K6	
90623-06705	2-K6	
90623-46705	2-K6	
**********		
* *		
* 99-000 *		
* *		
**********		
99236-0571	1-C4	
99351-04999	1-I6	
	1-N6	
	2-F10	
99351-05150	2-F10	
99351-05400	2-F10	
99351-06130	2-D8	
99351-06999	1-N6	
	2-F8	
99351-08999	2-F10	
99358-08999	2-F10	
99359-0813	1-C5	
99359-0814	1-D5	
99359-0822	1-D5	
99359-0826P	2-D10	
99541-00403	2-D9	
	2-N8	
99541-01105	1-E4	
99541-01201	1-G12	
99541-01252	1-E5	
99541-01401	2-K5	
99541-01601	1-E7	
	1-H7	
	1-K12	
99541-03501	4-N4	
99586-08166	1-F9	
	1-G12	
	1-I9	
99606-22030	1-C8	
99611-1500	2-L7	
99636-01110	2-K6	
99636-04130	2-K6	
99636-04140	2-K6	
99651-04060	2-M6	
99651-74050	2-K6	
99655-90005	2-K6	
99655-90010	2-L6	
99655-90015	2-L6	
99655-90020	2-L6	
99655-90025	2-L6	
99655-90030	2-L6	
99655-90035	2-L6	
99655-90040	2-L6	
99655-90045	2-L6	
99655-90050	2-L6	
99655-90055	2-L6	
99655-90060	2-L6	
99656-10005	2-L6	
99656-10010	2-L6	
99656-10015	2-L6	
99656-10020	2-L6	
99656-10025	2-L6	
99656-10030	2-L6	
99656-10035	2-L6	
99656-10040	2-L6	
99656-10045	2-L6	

99656-10050	2-L6
99656-10055	2-L6
99656-10060	2-M6
99700-5100	4-E11
	4-N10
99701-2070	3-H5
99701-3270	3-E5
99701-4278	3-E5
99701-4278Y	3-L4
99701-5050	3-J5
99701-6030	3-C10
	3-H10
	3-J10
	4-N9
99701-6038	3-H5
99701-6040	3-H15
	3-M4
	3-N14
99701-6050	3-K5
99705-1107	4-D7
	4-F7
99705-1115	4-D7
	4-F7
99705-1130	4-D7
	4-F7
99963-6310	1-M9
99963-6315	1-M9
99963-6330	1-M9
99963-6930	1-E10
99963-6940	1-E10
99963-6950	1-E10
99963-6960	1-E10
99963-6970	1-E10
**********	
* *	
* STANDARD PARTS *	
* *	
**********	
99541-00707	1-N12

A

A.C.C.SET---------- 4-D6
ABSORBER,ENERGY---------- 2-L4
ACTUATOR(R),POWER LOCK--- 3-D14
3-J14
ACTUATOR,A.C.C.---------- 4-D6
ACTUATOR,A.P.V.---------- 1-H4
ACTUATOR,MODE-HEATER UNIT 3-E16
ACTUATOR,RECYCLE & FRESH- 3-G16
ACTUATOR,SHIFT LOCK------ 2-G10
ACTUATOR,SHUTTER VALVE--- 1-N5
ACTUATOR,TEMP---------- 3-E16
ADAPTER(L),CTR-SUN VISOR- 4-C11
ADAPTER(R),CTR-SUN VISOR- 4-C11
ADAPTER,SUN VISOR-------- 4-F11
ADJUSTER NO.3---------- 3-D12
3-N12
ADJUSTER NO.4---------- 3-D12
3-N12
ADJUSTER,GLASS-FRT DOOR-- 3-I13
ADJUSTER,NO.1---------- 3-K11
3-L12
ADJUSTER,NO.2---------- 3-K11
3-L12
ALTERNATOR---------- 1-I11
AMP,PILLOW-AUDIO---------- 4-I6
AMP,WOOFER-AUDIO---------- 4-I6
ANTENNA,MOTOR-RADIO------ 4-K6
4-L6
ARM NO.1,LINK---------- 4-F8
ARM NO.2,LINK---------- 4-F8
ARM(L),LOWER---------- 2-G6
ARM(L),LOWER-LID HINGE--- 3-I4
ARM(L),LOWER-REAR-------- 2-I4
ARM(L),UPPER-LID HINGE--- 3-I4
ARM(R),LOWER---------- 2-G6
ARM(R),LOWER-LID HINGE--- 3-I4
ARM(R),LOWER-REAR-------- 2-I4
ARM(R),UPPER-LID HINGE--- 3-I4
ARM,WIPER---------- 4-F8
4-H8
ARMATURE---------- 1-K11
4-D3
ARMATURE,MAGNETIC CLUTCH- 4-G3
ATTACHMENT,PAD-FRONT----- 2-F6
ATTACHMENT,PAD-REAR------ 2-I3
AUDIO SET---------- 4-H6

B

BACK(C),FRT SEAT--------- 3-G12
BACK(L),FRONT SEAT------- 3-F12
3-N12
BACK(R),FRONT SEAT------- 3-M12
3-N11
BAG,ROOF PANEL---------- 4-N8
BAG,TOOL---------- 4-M10
BALL---------- 1-D12
BALL,PILLOW-RR LOWER ARM- 2-I4
BALL,STEEL---------- 1-L11
2-L7
BAND---------- 3-H14
3-K11
3-K12
3-N12
4-N7
BAND(L),TANK FIX.-------- 2-E8
BAND(R),TANK FIX.-------- 2-E8
BAND,BATTERY---------- 1-N11
BAND,BRAKE---------- 1-I13
BAND,PIPE---------- 3-J3
BAR,FORMING-SOFT TOP----- 4-H4
BASE,HORN BUTTON--------- 2-M4
BASE,INTERIOR MIRROR----- 4-C11
BASE,INTERIOR MIRROR----- 4-F11
BATTERY---------- 1-N11
BEARING---------- 1-C8
1-M9
2-C4
2-G3
2-L3
BEARING,BALL---------- 1-H10
1-N9
BEARING,BALL-ALT. FRONT-- 1-I11
BEARING,BALL-ALT. REAR--- 1-I11
BEARING,BALL-COUNTER SHAF 1-M9
BEARING,BALL-DRIVE PINION 2-J3
2-N3
BEARING,BALL-MAIN DRIVE G 1-E10
1-K9
BEARING,BALL-MAIN SHAFT-- 1-E10
1-K9
BEARING,NEEDLE---------- 1-C4
1-D4
1-E14
1-G10
1-H10
1-I10
1-K9
1-L9
1-L13
BEARING,PINION---------- 2-E5
2-H5
2-J3
2-N3
BEARING,ROLLER---------- 1-E10
1-K9
BEARING,ST. GEAR--------- 2-D5
2-G5
BEARING,WHEEL---------- 2-F3
BELT(L),LAP---------- 3-E13
BELT(R),LAP---------- 3-E13
BELT,AUTO SHOULDER-RETRAC 3-D13
BELT'A'(L),CORNER-SOFTTOP 4-H4
BELT'A'(L),FRT SEAT------ 3-D13
3-F13
BELT'A'(R),CORNER-SOFTTOP 4-H4
BELT'A'(R),FRT SEAT------ 3-D13
3-F13
BELT'A',BACK WINDOW------ 4-H4
BELT'B'(L),AUTO SHOULDER- 3-D13
BELT'B'(L),BACK WINDOW--- 4-H4
BELT'B'(L),CORNER-SOFTTOP 4-H4
BELT'B'(L),FRT SEAT------ 3-F13
BELT'B'(R),AUTO SHOULDER- 3-D13
BELT'B'(R),BACK WINDOW--- 4-H4
BELT'B'(R),CORNER-SOFTTOP 4-H4
BELT'B'(R),FRT SEAT------ 3-F13
BELT'C',BACK WINDOW------ 4-H4
BELT'V'---------- 1-C8
1-D6
1-H11
BEZEL(L),HEAD LAMP-LOWER- 3-J4
BEZEL(L),HEAD LAMP-UPPER- 3-J4
BEZEL(R),HEAD LAMP-LOWER- 3-I4
BEZEL(R),HEAD LAMP-UPPER- 3-I4
BEZZEL,AUTO CLOCK-------- 3-D10
BLADE(L) WIPER-FRONT----- 4-F8
BLADE,WIPER-REAR--------- 4-H8
BLOCK,FUSE---------- 4-D7
4-F7
BLOCK,MAIN FUSE---------- 4-H7
4-J7
BLOWER UNIT---------- 3-G.6
BOARD,AIR---------- 4-K10
BOARD,PARTITION---------- 4-K10
BOARD,PRINT-BURGLAR ALARM 4-M5
BODY & PISTON(L),CALIPER- 2-D6
2-G3
BODY & PISTON(R),CALIPER- 2-D6
2-G3
BODY SET,WATER PUMP------ 1-K7
BODY(L),FRONT DOOR------- 3-H13
3-K13
BODY(R),FRONT DOOR------- 3-H13
3-K13
BODY,CONTROL VALVE-UP---- 1-N12
BODY,FILLER CAP---------- 1-L7
BODY,OIL FILTER---------- 1-D7
1-G7
BODY,THROTTLE---------- 1-K5
1-N5
BODY,VALVE LWR---------- 1-C13
BODY,WATER PUMP---------- 1-K7
BOLT---------- 1-C12
1-D9
1-D12
1-F9
1-F13
1-G5
1-G13
1-G14
1-H5
1-H9
1-H12
1-I4
1-I12
1-K5
1-K12
1-L11
1-M7
1-N5
2-C3
2-C7
2-D7
2-E3
2-G6
2-H3
2-J3
2-L5
2-N4
3-C13
3-F3
3-H12
3-K11
3-M10
4-D5
4-E3
4-E5
4-H3
BOLT SET---------- 1-I10
BOLT,ADJUST---------- 1-C8
2-I4
BOLT,ADJUSTER-FRT SEAT--- 3-C13
3-I12
BOLT,ALTERNATOR---------- 1-H11
BOLT,ANCHOR END---------- 1-H12
BOLT,BRACKET-STAY DAMPER- 4-K3
BOLT,BRIDGE-FRT BRAKE---- 2-E6
BOLT,CARRIER---------- 2-D4
2-M3
BOLT,CLAMP---------- 1-N11
BOLT,CLUTCH CUT SWITCH--- 2-I8
BOLT,COMPRESSOR-AIR CON.- 4-D3
4-G3
BOLT,CONNECTOR---------- 1-D7
1-E7
1-G7
1-H7
2-E9
2-G9
2-J9
2-M8
BOLT,CONTROL LINK-------- 2-I4
BOLT,CONTROL VALVE------- 1-G13
1-J12
1-L12
BOLT,COVER-REG. GUIDE---- 3-G14
BOLT,DAMPER-REAR---------- 2-I4
BOLT,DUST COVER---------- 2-E3
BOLT,FLANGE-ST. KNUCKLE-- 2-G6
BOLT,FUEL DIST. REAR SIDE 1-E5
BOLT,FUEL DISTRIBUTOR---- 1-E5
BOLT,HINGE---------- 3-H4
BOLT,HINGE-H.L.RETRACTABL 3-I4
BOLT,HOOD OUTER---------- 4-I4
BOLT,HUB---------- 2-E3
2-M5
BOLT,INSULATOR,FRT HEAT-- 2-K9
3-F9
BOLT,JACK SET---------- 2-M6
BOLT,JOINT---------- 2-L7
BOLT,LINK---------- 3-J11
BOLT,LINK---------- 3-K12
BOLT,LOCK---------- 1-C7
1-F7
BOLT,LOWER ARM---------- 2-E3
BOLT,LOWER TRAY-STOP.BRKT 3-E9
BOLT,MOTOR-RETRACT H/LAMP 3-J4
BOLT,OIL PAN---------- 1-J12
BOLT,PULLEY---------- 1-C4
BOLT,REAM-SHTR V.ACTUATOR 1-H4
BOLT,REAR BRAKE---------- 2-E3
BOLT,REAR HOOK---------- 3-E9
BOLT,REAR SENSOR--------- 2-K9
BOLT,RING GEAR---------- 2-C4
2-K3
BOLT,SEAT BELT---------- 3-D13
BOLT,SET---------- 1-C7
1-F7
3-D3
3-I13
3-L13
BOLT,SHAFT---------- 2-N4
BOLT,SILENCER---------- 2-C7
3-E9
BOLT,SPECIAL---------- 3-M4
BOLT,SPLASH SHIELD------- 3-E9
BOLT,STARTER---------- 1-H11
BOLT,TENSION---------- 1-J3
1-M3
BOLT,TENSION ROD--------- 2-G6
BOLT,TIE DOWN HOOK-FRONT- 3-C7
3-E7
BOLT,VANE PUMP---------- 2-L5
BOLT'B',LINK---------- 2-F4
BONNET---------- 3-D6
BOOT KIT,FRT CALIPER----- 2-E6
BOOT KIT,RR CALIPER------ 2-I3
BOOT SET,INNER JOINT----- 2-D3
BOOT SET,OUTER JOINT----- 2-D3
BOOT,BALL JOINT-LWR ARM-- 2-G6
BOOT,CHANGE---------- 3-D11
BOOT,DUST-CHANGE LEVER--- 1-C11
1-L10
BOOT,MOTOR-RETRACT H/L--- 3-J4
BOOT,RACK---------- 2-D5
2-G5
BOOT,RELAY-WATER PROOF--- 4-F5
BOOT,TOP---------- 4-J4
BOSS,STEERING WHEEL------ 2-K4
2-M4
BOX(L),TORQUE---------- 3-E7
3-N6
BOX(R),TORQUE---------- 3-D7
3-N6
BOX,AMP-HEATER CONTROL--- 3-C16
BOX,BATTERY---------- 1-N11
BOX,BULB---------- 3-M10
BOX,CON-AUTO SHOULD.BELTS 4-N5
BOX,CONTROL-E.C.P.S.SYS.- 4-N5
BOX,GLOVE---------- 3-L10
3-M10
BOX,LAMP-(C) PANEL------- 3-C10
BOX,STORAGE---------- 4-N9
BRACKET---------- 1-E12
1-K12
3-J16
3-L16
4-C5
4-I8
BRACKET NO 1,A.B.S.------ 2-J9
BRACKET NO 2,A.B.S.------ 2-J9
BRACKET NO.1,FINISHER-REA 3-N5
BRACKET NO.2---------- 3-K10
BRACKET NO.2,FINISHER-REA 3-C6
BRACKET NO.5,A.B.S.------ 2-J9
BRACKET(L)---------- 3-J4
BRACKET(L),CABLE---------- 2-H3
BRACKET(L),CLOSING PLATE- 3-E7
BRACKET(L),ENGINE-------- 2-C7
2-D7
BRACKET(L),FENDER-------- 3-I6
3-K6
BRACKET(L),HINGE-LAMP LID 3-H4
BRACKET(L),HINGE-ROOF---- 4-K4
BRACKET(L),RADIATOR------ 1-J7
BRACKET(L),RR PKG-------- 4-H9
BRACKET(L),SEAT BELT----- 3-D13
BRACKET(L),SPEAKER------- 4-L6
BRACKET(L),TRIM-QTR PANEL 3-E8
BRACKET(L),TUNER--------- 4-I6
BRACKET(R)---------- 3-J4
BRACKET(R),ANTENNA------- 4-G6
BRACKET(R),CABLE--------- 2-H3
BRACKET(R),CLOSING PLATE- 3-D7
BRACKET(R),ENGINE-------- 2-C7
2-D7
BRACKET(R),FENDER-------- 3-H6
3-K6
BRACKET(R),HINGE-LAMP LID 3-H4
BRACKET(R),HINGE-ROOF---- 4-K4
BRACKET(R),RADIATOR------ 1-J7
BRACKET(R),RR PKG-------- 4-H9
BRACKET(R),SEAT BELT----- 3-D13
BRACKET(R),SPEAKER------- 4-L6
BRACKET(R),TRIM-QTR PANEL 3-C8
BRACKET(R),TUNER--------- 4-H6
4-I6
BRACKET(RR),AUDIO-------- 4-G6
BRACKET,A.C.C.BOX-------- 4-D6
BRACKET,ACCEL WIRE------- 1-I4
1-J4
BRACKET,ACCEL.WIRE-BY.A.C 1-N6
BRACKET,ACCEL.WIRE-SURG.T 1-J4
BRACKET,AIR CLEANER------ 1-F5
1-H5
BRACKET,AIR PUMP--------- 1-D6
BRACKET,BATT. CABLE------ 4-I7
4-J7
BRACKET,BATTERY---------- 3-E9
BRACKET,BONNET BULGE----- 3-D6
BRACKET,BUMPER----------- 3-G3
BRACKET,CANISTER--------- 1-C5
BRACKET,CENTER PANEL----- 3-J10
BRACKET,CLIP---------- 4-H7
4-J7
BRACKET,CLIP-ENG.WIRING-- 4-H7
4-J7
BRACKET,COMPRESSOR------- 1-C8
BRACKET,CONSOLE-NO.1----- 3-E11
BRACKET,CONTROL UNIT----- 4-C5
4-D5
BRACKET,COUPLER---------- 2-M4
BRACKET,FLOOR---------- 3-G7
3-H7
3-J8
3-N7
3-N8
BRACKET,FRONT---------- 1-K11
BRACKET,GARNISH-INST.---- 3-L10
BRACKET,GRILLE-C--------- 3-H6
3-K6
3-M7
BRACKET,HANGER---------- 2-F7
2-G7
2-H7
2-J7
2-K7
BRACKET,HANGER-ENGINE---- 1-M3
BRACKET,HANGER-FRONT PIPE 2-H7
BRACKET,HARNES---------- 4-F7
BRACKET,HNGR -MONOLITH CO 2-H7
2-K7
BRACKET,HOLE-ENG.WIRING-- 4-H7
4-J7
BRACKET,HORN---------- 4-C6
BRACKET,HT.CORD SUPPORTER 1-G11
BRACKET,IG.COIL---------- 1-G11
BRACKET,IG.COIL-TRAILING- 1-F11
BRACKET,INSULATOR-------- 1-K12
BRACKET,INTER COOLER----- 1-L4
BRACKET,LIQUID TANK------ 3-J16
BRACKET,LWR ARM---------- 2-G6
BRACKET,MAIN FUSE CASE--- 4-I7
4-J7
BRACKET,MASTER CYL.------ 2-I8
2-K8
BRACKET,MAT-TRUNK ROOM--- 3-K8
BRACKET,NO.2---------- 3-N3
BRACKET,OIL HOSE---------- 1-J7

BRACKET,OVERHEAD CONSOLE- 3-K5
BRACKET,P.B.VALVE-------- 2-G9
BRACKET,PIPE------------- 1-E12
BRACKET,PIPE HOLDER------ 2-K9
BRACKET,QUARTER TRIM----- 4-I11
BRACKET,REAR------------- 1-L11
BRACKET,RELAY------------ 4-E5
4-N5
BRACKET,RELAY-SET PLATE-- 3-H6
3-J6
BRACKET,SET-S. ROOF FRAME 4-E4
BRACKET,STAB -RR--------- 2-H4
BRACKET,STABILIZER------- 2-G6
BRACKET,SUB TANK--------- 1-M7
BRACKET,SUPPORT-H.T. CORD 1-G11
BRACKET,T/MISSION MT----- 2-C7
2-D7
BRACKET,TRUNK BOARD------ 4-K10
BRACKET,VACUUM PIPE------ 2-C9
BRACKET,WASHER TANK------ 4-E8
BREAKER------------------ 4-D7
4-F7
BREATHER----------------- 2-J3
2-N3
BREATHER,AIR------------- 1-H12
BREATHER,AIR-T/MISSION--- 1-F9
1-I9
BRKT NO.1(L),GRILLE-TRIM- 3-C15
3-I15
BRKT NO.1(R),GRILLE-TRIM- 3-C15
3-I15
BRKT SET,DASH POT-THROT-- 1-J5
1-M5
BRKT(L),BELT-FORMING----- 4-H4
BRKT(L),COAT HANGER------ 4-C11
BRKT(L),DAMPER STAY-QTR-- 3-M7
BRKT(L),FORMING BAR------ 3-D8
BRKT(L),INST.------------ 3-E8
BRKT(L),MOTOR-SIDE FRAME- 3-N8
BRKT(L),PILLAR GARNISH--- 3-G7
BRKT(L),SILENCER-S/PANEL- 3-I8
3-M8
BRKT(L),STOPPER-R. FRAME- 3-N8
BRKT(L),TRIM-QTR PANEL--- 3-J7
BRKT(R),BELT-FORMING----- 4-H4
BRKT(R),DAMPER STAY-QTR-- 3-M7
BRKT(R),FORMING BAR------ 3-N7
BRKT(R),INST.------------ 3-C8
BRKT(R),MOTOR-SIDE FRAME- 3-L8
BRKT(R),PILLAR GARNISH--- 3-G7
BRKT(R),SILENCER-S/PANEL- 3-H8
3-K8
BRKT(R),STOPPER-R. FRAME- 3-L8
BRKT(R),TRIM-QTR PANEL--- 3-I7
BRKT,AIR FLOW METER------ 1-F5
1-H5
BRKT,IGNITION COIL------- 1-G11
BRKT,MOTOR-ANTENA-------- 4-L6
BRKT,SURGE TANK---------- 1-J4
BRKT'A',CONTROL UNIT----- 3-H8
3-K8
BRKT'B',CONTROL UNIT----- 3-I8
3-M8
BRUSH-------------------- 1-J11
BRUSH,YOKE--------------- 1-M11
BULB--------------------- 3-C10
3-E5
3-F16
3-H5
3-H10
3-H15
3-J5
3-J10
3-L4
3-M4
3-N14
4-N9
BULB & SOCKET------------ 3-C10
3-D11
BULB,AUTO CLOCK---------- 3-C10
BULB,FRONT FOG LAMP------ 3-N4
BULB,INTERIOR MIRROR----- 3-K5
4-E11
4-N10
BULB'A',CLUSTER SWITCH--- 4-I5
BULB'A',METER SET-------- 3-H10
BULB'B',CLUSTER SWITCH--- 4-I5
BULB'B',WARNING UNIT----- 3-C10
BULB'C',CLUSTER SWITCH--- 4-I5
BULB'D',CLUSTER SWITCH--- 4-I5
BUMPER,BOUND------------- 2-G6
BUMPER,REAR-------------- 3-H3
BUSH--------------------- 1-C8
1-I4
2-C8
2-H8
2-H10
2-I8
2-L8
3-L12
BUSH SET,CHANGE LEVER---- 1-C11
1-L10
BUSH,ELBOW JOINT--------- 2-D9
2-M7
2-N8
BUSH,HINGE--------------- 3-L11
BUSH,INNER--------------- 4-I8
BUSH,RUBBER-------------- 2-E5
2-H5
BUSH,RUBBER-LWR ARM------ 2-H6
BUSH,RUBBER-REAR DAMPER-- 2-F4
BUSH,RUBBER-RR LOWER ARM- 2-I4
BUSH,STABILIZER-RR------- 2-H4
BUSHING,LOWER ARM-------- 2-I4
BUSHING,RUBBER-FRT------- 2-H6
BUTTON,HORN-------------- 2-M4
BUTTON,RELEASE----------- 2-M9
BUZZER,TOP MOTOR--------- 4-J4

****
*   *
*   C   *
*   *
****

CABLE(R),R.-PARK.-------- 2-M9
CABLE,ACCEL.------------- 2-C8
CABLE,F/LID OPENER------- 2-G8
CABLE,INTER LOCK--------- 2-G10
CABLE,OPENER------------- 2-G8
CABLE,PARKING-FRT-------- 2-M9
CABLE,SPEEDOMETER-------- 3-G10
CALIPER(L),FRT BRAKE----- 2-E6
CALIPER(L),RR BRAKE------ 2-H3
2-I3
CALIPER(R),FRT BRAKE----- 2-E6
CALIPER(R),RR BRAKE------ 2-H3
CAM,CANCEL--------------- 4-H5
CAM,CHANGE LEVER--------- 2-G10
CAM,FIRST IDLE----------- 1-J5
1-K5
1-M5
CANISTER----------------- 1-C5
CAP---------------------- 1-I4
2-F9
2-H9
2-K9
3-C9
3-F14
3-K14
4-E9
4-K3
4-K6
4-L8
4-N7
CAP SET,RESERVE TANK----- 2-C9
2-L7
2-M8
CAP,BLEEDER SCREW-------- 2-D6
2-I3
2-L7
CAP,BLIND---------------- 1-F5
1-H4
1-J4
1-K5
1 K6
CAP,BLIND-CRANK ANGLE SEN 4-N4
CAP,CENTER--------------- 2-K6
CAP,CRANK ANGLE SENSOR--- 4-C5
CAP,DAMPER--------------- 2-G6
CAP,FILLER--------------- 2-E8
2-K5
CAP,GARNISH-------------- 3-K10
CAP,HINGE-H.L.RETRACTABLE 3-I4
CAP,HORN----------------- 2-K4
CAP,HUB------------------ 2-M5
CAP,IDLE SWITCH---------- 1-F5
CAP,LOCKING-------------- 3-N4
CAP,OIL FILLER----------- 1-E3
CAP,PARK BRAKE LEVER----- 2-M9
CAP,RADIATOR------------- 1-M7
CAP,REAR SPOILER--------- 4-L11
CAP,RUBBER--------------- 2-D6
CAP,SEAL----------------- 4-H8
CAP,SPRING--------------- 1-C11
1-L10
1-M10
CAP,SUB TANK------------- 1-N7
CAP,TANK----------------- 3-K3
4-E8
4-I8
CARRIER,DIFFERENTIAL----- 2-J3
2-N3
CARRIER,FRONT------------ 1-K13
CARRIER,OVER DRIVE------- 1-N13
CARRIER,REAR------------- 1-K13
CARTRIDGE,OIL FILTER----- 1-E7
1-H7
CASE--------------------- 2-K3
CASE(L),BLOWER----------- 3-G16
CASE(L),HEATER UNIT------ 3-E16
CASE(R),BLOWER----------- 3-G16
CASE(R),HEATER UNIT------ 3-E16
CASE,CHANGE CONTROL------ 1-C11
1-L10
CASE,CONTROL UNIT-------- 4-M5
CASE,COOLING UNIT-------- 4-I3
4-J3
CASE,LAMP---------------- 3-D10
CASE,METER--------------- 3-H10
CASE,OVER DRIVE---------- 1-L12
CASE,T/MISSION----------- 1-F9
1-G12
1-H9
CASING,DIFFERENTIAL------ 2-D4
2-M3
CASING,STOPPER----------- 2-C7
2-D7
CATALYST,THREE WAY------- 2-I7
CEILING,TOP-------------- 4-L8
CHAIN,OIL PUMP----------- 1-C7
1-F7
CHAMBER(L),EXTRACTOR----- 3-C6
CHAMBER(R),EXTRACTOR----- 3-C6
CHAMBER,AIR-------------- 1-G6
1 K6
CHANNEL(L),DIVISION-DOOR- 3-L13
CHANNEL(L),GLASS RUN----- 3-I13
CHANNEL(R),DIVISION-DOOR- 3-L13
CHANNEL(R),GLASS RUN----- 3-I13
CHARGE,AIR COOLER-------- 1-L4
CHECKER,DOOR------------- 3-C14
3-I14
CLAMP,BATTERY------------ 1-N11
CLAMP,HOSE--------------- 1-F5
1-L4
1-M4
3-G13
CLAMP,HOSE-A.I.PIPE SIDE- 1-L4
CLAMP,SPARE TIRE--------- 2-M6
CLIP--------------------- 1-C5
1-E6
1-E12
1-F13
1-G6
1-K5
1-K6
2-C8
2-D4
2-D8
2-D10
CLIP---------------------- 2-G8
2-H9
2-J3
2-J8
2-L5
2-M3
2-M9
3-C11
3-C14
3-D3
3-D14
3-F3
3-G6
3-G10
3-G14
3-H3
3-H14
3-I14
3-J3
3-J14
3-J16
3-L14
3-M3
3-M16
3-N3
3-N4
4-C8
4-D6
4-D10
4-H8
4-I9
4-I10
4-K3
4-L6
4-L9
4-L11
4-M3
4-N7
4-N8
CLIP (R)----------------- 3-C3
3-C14
3-I14
CLIP KIT,ST. GEAR-------- 2-H5
CLIP SET,DRIVE SHAFT----- 2-D3
CLIP(L),INNER HANDLE----- 3-D14
3-J14
CLIP(L),TUBE-LOWER------- 4-D4
CLIP(L),TUBE-UPPER------- 4-D4
CLIP(R),TUBE-LOWER------- 4-D4
CLIP(R),TUBE-UPPER------- 4-D4
CLIP,AIR BAG------------- 3-G13
CLIP,AIR HOSE------------ 1-D6
1-G5
1-H6
1-I5
1-L6
CLIP,ANTILOCK BRAKE SYS.- 2-K9
CLIP,CABLE--------------- 2-C8
2-N9
3-J4
3-N4
4-C8
CLIP,CORD-CLUSTER SWITCH- 4-J5
CLIP,DASHBOARD INSULATOR- 4-D10
4-I10
CLIP,DEFLECTOR LINK------ 4-F4
CLIP,DEFROSTER GRILLE---- 3-L10
CLIP,DRAIN HOSE-FRONT---- 4-D4
CLIP,DRAIN HOSE-SUN ROOF- 4-G4
CLIP,FLEXIBLE HOSE------- 2-E9
2-G9
2-M9
2-N7
CLIP,FLUID HOSE---------- 1-M6
CLIP,FUEL PIPE----------- 2-E10
CLIP,GARNISH------------- 4-L8
CLIP,GARNISH-INST.------- 3-K10
CLIP,HARNESS-OUT. HANDLE- 3-D14
3-J14
CLIP,INTER LOCK CABLE---- 2-G10
CLIP,M.OIL TUBE---------- 1-E7
1-H7
CLIP,OIL HOSE------------ 1-J7
CLIP,OIL TUBE------------ 1-D7
1-G7
CLIP,OPENER CABLE-------- 3-F6
4-H8
CLIP,PIPE---------------- 1-E12
2-E10
2-F9
2-H9
3-I16
3-L16
4-E8
CLIP,QUARTER TRIM-------- 4-I11
CLIP,RR. PILLAR TRIM----- 4-C9
CLIP,SEAL RUBBER-INT.CLR- 1-L4
CLIP,SLIDE--------------- 4-E9
CLIP,STEP MOULD---------- 3-M3
CLIP,STOP LAMP-HI. MOUNT- 3-F5
CLIP,TRIM---------------- 4-D9
4-F9
4-G9
4-J9
4-J11
4-L8
4-N8
CLIP,TUBE-REGULATOR GUIDE 3-G14
CLIP,TUBULAR------------- 3-L5
CLIP,WATER HOSE-BY.A.C.V. 1-L4
CLIP,WEATHERSTRIP-OUTER-- 3-H15
3-N14
CLIP,WIRE-BONNET--------- 3-E6
4-D8
CLIP'B',PIPE-REAR WASHER- 4-H8
CLUTCH,DIRECT------------ 1-M13
CLUTCH,FRONT------------- 1-I13
CLUTCH,MAGNET------------ 4-E3
4-H3
CLUTCH,ONE WAY----------- 1-D14
1-N13
CLUTCH,REAR-------------- 1-K13
COCK,DRAIN--------------- 1-M7
COIL & IGNITER,LEADING--- 1-F11
COIL & IGNITER,TRAILING-- 1-F11
COIL,FIELD--------------- 4-E3
4-H3
COIL,IGNITION-LEADING---- 1-F11
COIL,IGNITION-TRAILING--- 1-F11
COLLAR,CLUTCH REL.------- 1-C9
1-D9
COLLAR,COMP.BRKT--------- 1-C8
COLLAR,COMP.BRKT-PULLEY-- 1-C8
COLLAR,HARNESS-SIDE SILL- 3-F9
COLLAR,LONG-DRIVING&DIFF. 2-C4
2-K3
COMPRESSOR--------------- 4-D3
4-G3
COMPRESSOR,AIR CON.------ 4-D3
4-G3
CONDENSER---------------- 3-J16
3-M16
4-C7
CONNECTING,SHELL--------- 1-N13
CONNECTOR---------------- 1-I5
1-L6
CONNECTOR SET------------ 1-J11
CONNECTOR,AIR TUBE------- 1-H7
CONNECTOR,CHANGE LEVER--- 2-G10
CONNECTOR,DISCHARGE VALVE 4-D3
CONNECTOR,SUCTION VALVE-- 4-D3
CONSOLE,OVERHEAD--------- 3-K5
CONSOLE,REAR------------- 3-D11
3-E11
CONTACT,HORN------------- 4-H5
CONTROL,HEATER----------- 3-F16
CONTROL,REMOTE-AUDIO----- 4-H6
CONTROLLER,AE SYSTEM-DISC 4-G6
CONVERTER,CATALYST------- 2-E7
2-I7
CONVERTER,MONOLITH------- 2-G7
CONVERTER,TORQUE--------- 1-C12
COOLER,OIL--------------- 1-J7
CORD--------------------- 2-F8
CORD SET,HI.TENSION------ 1-G11
CORD,EARTH--------------- 4-C7
CORD,FRONT FOG LAMP------ 3-N4

CORD,HIGH TENSION (L-1)-- 1-G11
CORD,HIGH TENSION (L-2)-- 1-G11
CORD,HIGH TENSION (T-1)-- 1-G11
CORD,HIGH TENSION (T-2)-- 1-G11
CORD,HORN-ST. WHEEL------ 2-M4
CORD,LICENSE LAMP-------- 3-H5
CORD,SHORT--------------- 4-K7
CORD,SHORT-FRT SEAT BACK- 3-C13
CORE,HEATER------------- 3-E16
COTTER,TAPER------------ 1-C10
1-J10
COUPLER,SOLENOID VALVE--- 1-L12
COVER------------------- 1-I4
2-M9
4-H3
COVER (L),SERVICE-RR FLOO 3-F9
COVER (R),SERVICE-RR FLOO 3-F9
COVER(L),BELT----------- 4-C9
COVER(L),CLUSTER SWITCH-- 4-I5
COVER(L),DUST----------- 2-N5
COVER(L),DUST-DOOR TRIM-- 3-E15
3-J15
COVER(L),GARNISH-INST.--- 3-L10
COVER(L),HINGE---------- 4-D9
COVER(L),HOLE-DASH. INSU. 4-D10
COVER(L),IN.HANDLE------- 3-C14
3-I14
COVER(L),KNUCKLE-------- 3-E12
3-N12
COVER(L),LAP BELT-------- 4-D10
COVER(L),LINK----------- 4-C9
COVER(L),PASSING HOLE---- 3-H4
COVER(L),POCKET-DOOR TRI 3-E15
3-J15
COVER(L),RAIL-FRT----
COVER(L),RAIL-RR------
COVER(L),RETRACTOR-FRON
COVER(L),RETRACTOR-REAR-
COVER(L),SIDE----------
COVER(L),SIDE NO.2------- 3
COVER(L),T/END TRIM------ 4-K
COVER(R),BELT----------- 4-C9
COVER(R),CLUSTER SWITCH-- 4-I5
COVER(R),DUST----------- 2-M5
2-N5
COVER(R),DUST-DOOR TRIM-- 3-E15
3-I15
COVER(R),GARNISH-INST.--- 3-K10
COVER(R),HINGE---------- 4-C9
COVER(R),HOLE-DASH. INSU. 4-D10
COVER(R),IN.HANDLE------- 3-C14
3-I14
COVER(R),KNUCKLE-------- 3-M11
3-M12
COVER(R),LAP BELT-------- 4-D10
COVER(R),LINK----------- 4-C9
COVER(R),PASSING HOLE---- 3-H4
COVER(R),POCKET-DOOR TRIM 3-E15
3-J15
COVER(R),RAIL-FRT-------- 4-E9
COVER(R),RAIL-RR--------- 4-E9
COVER(R),RETRACTOR------- 4-E10
COVER(R),RETRACTOR-FRONT- 4-E10
COVER(R),SIDE----------- 3-N10
COVER(R),SIDE NO.2------- 3-N10
COVER(R),T/END TRIM------ 4-K9
COVER,ACTUATOR---------- 4-D6
COVER,AIR CLEANER-------- 1-G5
1-I5
COVER,ANCHOR------------ 3-D13
COVER,BEARING----------- 1-F9
1-H9
COVER,BLIND------------- 1-C11
1-I9
1-L10
COVER,BOX-BATTERY-------- 1-N11
COVER,BRACKET-DAMPER STAY 4-L3
COVER,CLUTCH------------ 1-C9
1-D9
COVER,COLUMN-LOWER------- 3-D10
COVER,COLUMN-UPPER------- 3-D10
COVER,DAMPER STAY-------- 4-K3
COVER,DIAL-------------- 3-H12
3-I12
COVER,DOOR BODY--------- 3-G14
3-L14
COVER,DUST-------------- 1-C8
1-I3
1-L3
2-C5
2-D5
2-F3
2-G5
COVER,DUST-CLUTCH FORK--- 1-C9
1-D9
COVER,END--------------- 2-E5
2-H5
COVER,FRONT------------- 1-J3
1-M3
COVER,FRONT CLUTCH------- 1-C9
1-D9
COVER,FRONT-ALTERNATOR--- 1-I11
COVER,FUSE BLOCK-------- 4-D7
4-F7
COVER,HOLE-------------- 3-C9
3-D9
4-G5
COVER,HOLE-CLUSTER SWITCH 3-F10
COVER,HOLE-H/FRAME&FEADER 4-I8
COVER,HOLE-LIFT GATE----- 3-D9
3-H14
3-L14
COVER,HOLE-QTR TRIM------ 4-I11
COVER,HORN PAD---------- 2-K4
COVER,IG.COIL-LEADING---- 1-F11
COVER,IG.COIL-T-1-------- 1-F11
COVER,IG.COIL-T-2-------- 1-F11
COVER,JACK-------------- 4-I9
COVER,KNOB-HINGE-------- 4-L4
COVER,MAIN FUSE BLOCK---- 4-H7
4-J7
COVER,MAIN-C. P. UNIT---- 4-M5
ER,MOTOR---------- 3-G16
MOTOR-SLIDING ROOF- 4-F4
OIL PUMP---------- 1-D12
ER-FLOOR MAT---- 4-F10
4-G10
4-J10
CO R HEAD CONSOLE-- 3-K5
COV -ALTERNATOR---- 1-I11
COVE 4-N5
COVER, 1-C11
1-L10
COVER,SEA VL PANEL---- 3-D9
COVER,SEAL OUD-------- 3-G4
COVER,SERVICE OLE------- 3-D9
COVER,SERVICE HOLE-CLUST. 3-F10
COVER,SERVO------------- 1-I12
COVER,SET--------------- 2-M5
COVER,SOCKET-F.FOG LAMP-- 3-M4
COVER,SOUND PROOF-------- 4-L6
COVER,SPARE TIRE--------- 4-K10
COVER,STEERING SHAFT----- 2-C5
COVER,SUB-C. P. UNIT----- 4-M5
COVER,THERMOSTAT--------- 1-L7
COVER,TOP--------------- 1-C12
COVER,UNDER------------- 1-C12
1-H9
COVER,UNDER CLUTCH HOUS.- 1-D9
COVER,UNDER-FRONT-------- 3-E9
COVER,VALVE BODY--------- 1-D13
COVER,VENT.------------- 1-C9
1-D9
COVER,WHEEL CORE--------- 2-K4
2-M4
COVER,WIPER ARM-REAR----- 4-I8
COVER,WIPER MOTOR-------- 4-H8
COVER'A'(L),FRAME-G.HATCH 4-M3
COVER'A'(R),FRAME-G.HATCH 4-L3
COVER'A',HOLE----------- 4-D10
COVER'B'(L),FRAME-G.HATCH 4-M3
COVER'B'(R),FRAME-G.HATCH 4-L3
COVER'B',HOLE----------- 4-D10
COVER'I',HYDRAULIC UNIT-- 2-J9
COVER'L',HYDRAULIC UNIT-- 2-J9
COWLING,FAN------------- 1-M7
COWLING,RADIATOR-------- 1-M7
CUP,SECONDARY----------- 2-D9
CUSHION(L),FRT SEAT------ 3-D12
3-E12
3-N12
CUSHION(R),FRT SEAT------ 3-L11
3-L12
3-M11
CUSHION,RUBBER---------- 3-G14
3-J10
3-L14
4-N9
CYL.,CLUTCH MASTER------- 2-L7
CYL.,CLUTCH RELEASE------ 2-L7
CYL.,TANDEM MASTER------- 2-C9
2-N8

****
* *
* D *
* *
****

DAM(C),AIR-SKIRT--------- 4-K11
DAM,AIR-SKIRT----------- 4-K11
DAM,FRT.WSHLD GLASS------ 4-C4
4-N3
DAM,RR.WINDOW GLASS------ 4-N3
DAMPER------------------ 3-E10
DAMPER(L),FRONT---------- 2-I6
DAMPER(R),FRONT---------- 2-I6
DAMPER,DYNAMIC---------- 1-C10
1-I10
DAMPER,REAR------------- 2-G4
DASH POT---------------- 1-K5
1-N5
DECK(L),FLOOR----------- 3-F9
DECK(R),FLOOR----------- 3-F9
DEFLECTOR--------------- 4-E4
DIAL,LUMBAR SUPPORT------ 3-H12
DIAPHRAGM--------------- 1-J5
1-M5
DIAPHRAGM,VACUUM-------- 1-J12
DIFFERENTIAL------------ 2-C4
DISC,CLUTCH------------- 1-C9
1-D9
DISPLAY,SECURITY-ALARM--- 4-G5
DISTRIBUTOR(P),FUEL------ 1-E5
DISTRIBUTOR(S),FUEL------ 1-E5
DISTRIBUTOR,OIL---------- 1-E14
DOWEL,TUBULAR----------- 1-E3
1-G3
DRIVING & DIFF.---------- 2-J3
2-N3
DRUM,CLUTCH------------- 1-I13
DRUM,CONNECTING---------- 1-D14
DRUM,DIRECT------------- 1-N13
DRUM,REAR CLUTCH-------- 1-K13
DUCT NO.1(L)------------ 3-G11
DUCT NO.1(L),LAP-VENT.--- 3-G11
DUCT NO.1(R)------------ 3-G11
DUCT NO.2(L),LAP VENT.--- 3-G11
DUCT(L),'A' AIR---------- 3-N4
DUCT(L),AIR------------- 3-M4
3-N4
DUCT(L),AIR-BRAKE PIPE--- 2-E9
2-G9
DUCT(L),SHOWER---------- 3-D16
DUCT(L),SIDE DEMIST.----- 3-G11
DUCT(R),'A' AIR---------- 3-M4
DUCT(R),'B' AIR---------- 3-M4
DUCT(R),AIR------------- 3-M4
DUCT(R),AIR-BRAKE PIPE--- 2-E9
2-G9
DUCT(R),SHOWER---------- 3-D16
DUCT(R),SIDE DEMIST.----- 3-G11
DUCT,AIR---------------- 1-F5
1-H5
3-C16
DUCT,AIR-RADIATOR SHROUD- 3-I6
3-K6
DUCT,CENTER------------- 3-G11
DUCT,DEFROSTER---------- 3-C16
DUCT,FRESH AIR---------- 1-F5
1-G5
1-H5
DUCT,FRESH AIR---------- 1-I5

****
* *
* E *
* *
****

ELECTRIC UNIT,A.B.S.----- 2-K9
ELEMENT,AIR CLEANER------ 1-G5
1-I5
END,CONTROL LEVER-------- 1-K10
1-N10
END,S/ROD(1ST&2ND)------- 1-K10
1-N10
END,S/ROD(3RD&4TH)------- 1-K10
1-N10
END,SHIFT--------------- 1-N10
END,SHIFT ROD(O/TOP&REV.) 1-K10
ENGINE,SHORT------------ 1-C3
1-D3
EQUALIZER,GRAPHIC-------- 4-I6
EVAPORATOR-------------- 4-I3
4-J3
EYE BOLT KIT,ST. GEAR---- 2-F5
2-H5
2-I5

****
* *
* F *
* *
****

FABRIC COVERING,ROOF PANE 4-H4
FABRIC,TOP-SOFT TOP------ 4-H4
FACE,FRONT BUMPER-------- 3-F3
FAN & FAN DRIVE---------- 1-M7
FAN DRIVE--------------- 1-M7
FAN,ADDITIONAL---------- 1-K7
FAN,COOLING------------- 1-K7
1-L7
FAN,MOTOR--------------- 3-G16
FASTENER---------------- 3-G3
3-G4
3-J13
3-M13
3-N3
3-N5
3-N13
4-D9
4-F9
4-G10
4-H10
4-J9
4-J11
4-K10
4-L4
4-L10
4-L11
4-M8
4-M9
4-N6
FASTENER(L)------------- 3-J13
3-M13
FASTENER(R)------------- 3-J13
3-M13
FASTENER,BONNET BURDGE--- 3-D6
FASTENER,CTR.P/UPP.------ 4-F9
FASTENER,DOOR TRIM------- 3-C15
3-I15
FASTENER,DUCT PANEL------ 3-I6
3-K6
FASTENER,F.WIND.MLD.----- 3-L3
FASTENER,HINGE COVER----- 4-D9
FASTENER,REAR BUMPER----- 3-G3
FASTENER,SEAL----------- 3-F15
3-K15
4-H10
4-J9
4-L10
4-M9
FASTENER,TAPPING-------- 4-K10
FASTENER,TOP CEILING----- 4-L8
FASTENER,TRIM-SLIDE ROOF- 4-F4
FASTENER,TURN-SIDE LID--- 4-I9
4-L9
FEEDER & COVER---------- 4-L6
FEEDER-ANTENNA---------- 4-L6
FEEDER,ANTENNA---------- 4-L6
FILM,PANEL-NO.1--------- 3-F16
FILTER,FUEL------------- 1-C5
FILTER,FUEL PUMP-------- 2-D8
FINISHER,REAR----------- 3-N5
FLANGE------------------ 1-D14
FLANGE,COMPANION-------- 2-J3
2-N3
FLANGE,DRIVE------------ 1-D14
FLANGE,REAR AXLE-------- 2-F3
FLOAT------------------- 2-C9
2-M8
FOAM(L),ENGY.ABS.-RR BUMP 3-H3
FOAM(L),ENGY.ABS-FRT BUMP 3-G3
FOAM(R),ENGY.ABS.-RR BUMP 3-H3
FOAM(R),ENGY.ABS-FRT BUMP 3-G3
FORK,BRAKE-------------- 2-I8
2-K8
FORK,CLUTCH------------- 2-H8
FORK,CLUTCH RELEASE------ 1-C9
1-D9
FORK,SHIFT-------------- 1-K10
FORK,SHIFT(1ST&2ND)------ 1-K10
1-N10
FORK,SHIFT(3RD&4TH)------ 1-K10
1-N10
FORK,SHIFT-5TH & REVERSE 1-D11
FRAME(L),BACK-FRT-------- 3-G12
FRAME(L),CUSHION-FRT----- 3-E12
3-N12
FRAME(L),LAMP LID-------- 3-H4
FRAME(L),REAR SIDE------- 3-I8
3-J8
3-N8
FRAME(L),REAR SIDE-UPPER- 3-M8
FRAME(L),SIDE-FRONT------ 3-E7
3-N6
FRAME(L),SIDE-OUTER------ 3-K7
FRAME(R),BACK-FRT-------- 3-C12
FRAME(R),CUSHION-FRT----- 3-M11
3-M12
FRAME(R),LAMP LID-------- 3-H4
FRAME(R),REAR SIDE------- 3-H8
3-L8
FRAME(R),REAR SIDE-UPPER- 3-L8
FRAME(R),SIDE-FRONT------ 3-D7
3-N6
FRAME(R),SIDE-OUTER------ 3-I7
FRAME(RR.L),FRONT-------- 3-I8
3-M8
FRAME(RR.R),FRONT-------- 3-H8
3-K8
FRAME,BACK WINDOW-------- 4-J4
FRAME,GLASS HATCH-------- 4-K3
FRAME,INST.PANEL--------- 3-K10
FRAME,PIPE-UPPER--------- 3-I16
FRAME,SLIDING ROOF------- 4-E4
FRAME,SUB--------------- 2-J4
FUSE(100A)-------------- 4-H7
4-J7
FUSE(15A)--------------- 4-D7
4-F7
FUSE(30A)--------------- 4-D7
4-F7
4-H7
4-J7
FUSE(60A)--------------- 4-H7
4-J7
FUSE(7.5A)-------------- 4-D7
4-F7

****
* *
* G *
* *
****

GARNISH(L),DOOR---------- 3-K15
GARNISH(L),SAIL-IN.------ 4-E11

GARNISH(L),SAIL-IN.------ 4-N10
GARNISH(R),DOOR---------- 3-K15
GARNISH(R),SAIL-IN.------ 4-E11
4-N10
GARNISH,TAIL PIPE-------- 2-H7
2-K7
GARNISH,TOP-FRONT-------- 4-L8
GARNISH,TOP-REAR--------- 4-L8
GARNISH,UPPER------------ 3-K10
GASKET------------------- 1-D13
1-H4
1-I5
1-I12
1-J7
1-L6
1-L7
1-M4
1-M11
1-N4
2-D8
2-F7
2-G7
2-H8
2-J7
2-K8
3-D4
4-D3
4-J8
4-N4
GASKET & SEAL KIT-------- 1-J14
GASKET KIT,COMPRESSOR---- 4-G3
GASKET NO.2,IN. MANIFOLD- 1-H4
1-J4
GASKET SET,ENGINE-------- 1-C3
1-D3
GASKET SET,SUB-ENG.------ 1-C3
1-D3
GASKET(L)---------------- 3-G11
GASKET(L),F.COMB.-------- 3-L4
GASKET(R)---------------- 3-G11
GASKET(R),F.COMB.-------- 3-L4
GASKET,A.C.V.------------ 1-E6
GASKET,A.C.VALVE--------- 1-D6
GASKET,B.A.C. VALVE------ 1-I6
1-M6
GASKET,BLIND COVER------- 1-I9
GASKET,CAP--------------- 2-E8
GASKET,COVER PLATE------- 1-C11
1-L10
GASKET,DRUM SUPPORT------ 1-K12
GASKET,EX.MANIFOLD------- 1-K4
GASKET,EXH.PIPE-CONVERTER 2-E7
2-I7
GASKET,EXHAUST PIPE------ 2-I7
GASKET,EXTENSION--------- 1-I12
GASKET,FILLER PIPE------- 2-D8
GASKET,FRONT COVER------- 1-C9
1-J3
1-M3
GASKET,HINGE-LIFT GATE--- 4-K3
GASKET,IN.MANIFOLD------- 1-H4
1-J4
GASKET,KEY CYLINDER------ 3-D3
GASKET,LICENSE----------- 3-H5
GASKET,LICENSE LAMP------ 3-H5
GASKET,METERING OIL------ 1-D7
1-G7
GASKET,O/DRIVE CASE------ 1-L12
GASKET,OIL CAP----------- 1-E3
1-G3
GASKET,OIL FILLER PIPE--- 1-H3
GASKET,OIL PAN----------- 1-J3
1-J12
1-M3
GASKET,OIL PIPE---------- 1-F7
1-M4
GASKET,OIL PUMP---------- 1-C12
GASKET,OIL STRAINER------ 1-C7
1-F7
1-N4
GASKET,RR.COMB.---------- 3-F5
GASKET,RR.SIDE TURN------ 3-H5
GASKET,SEAL-------------- 3-H3
GASKET,SHUTTER VALVE----- 1-I4

GASKET,SPOILER----------- 4-L11
GASKET,SPRING CAP-------- 1-C11
1-L10
GASKET,STOP LAMP-HI.MOUNT 3-F5
GASKET,SURGE TANK-------- 1-H4
GASKET,THERMO------------ 1-K5
1-M5
GASKET,THERMOSTAT COVER-- 1-L7
GASKET,TUBE-CLIP--------- 4-D4
GASKET,TURBOCHARGER------ 1-N4
GASKET,UNDER COVER------- 1-H9
GASKET,VAC POWER ASSIST- 2-C9
2-M8
GASKET,VAPOR VALVE------- 2-F8
GASKET,WATER DRAIN-INTER. 1-E3
1-G3
GASKET,WATER PUMP-------- 1-K7
GASKET'A',REAR BUMPER---- 3-H3
GAUGE UNIT,OIL PRES.----- 4-N4
GAUGE,FUEL TANK---------- 2-F8
GAUGE,OIL LEVEL---------- 1-F3
1-H3
1-K12
GEAR--------------------- 1-L11
GEAR SET,FINAL----------- 2-J3
2-N3
GEAR,COUNTER------------- 1-H10
1-N9
GEAR,COUNTER REVERSE----- 1-H10
1-M9
GEAR,COUNTER SHAFT------- 1-H10
1-M9
GEAR,DIFF.SIDE----------- 2-K3
GEAR,DRIVE--------------- 1-E4
GEAR,DRIVE-OIL PUMP------ 1-E4
GEAR,DRIVEN-------------- 1-D7
1-F9
1-G12
1-H7
1-I9
GEAR,INTERNAL------------ 1-D14
1-K13
GEAR,INTERNAL-STARTER---- 1-K11
GEAR,MAIN DRIVE---------- 1-E10
1-K9
GEAR,OVER DRIVE---------- 1-N13
GEAR,OVER TOP------------ 1-I10
1-N9
GEAR,REVERSE------------- 1-G10
1-M9
GEAR,REVERSE IDLE-------- 1-H10
1-N9
GEAR,RING-FLY WHEEL------ 1-D4
GEAR,SHAFT--------------- 4-G8
GEAR,SPEEDO.DRIVE-------- 1-D14
1-I10
1-N9
GEAR,STATIONARY-FRT.----- 1-F3
1-H3
GEAR,STATIONARY-RR.------ 1-F3
1-H3
GEAR,STEERING------------ 2-D5
2-G5
GEAR,SUN----------------- 1-K13
GEAR,1ST----------------- 1-G10
1-L9
GEAR,2ND----------------- 1-F10
1-L9
GEAR,3RD----------------- 1-E10
1-K9
GENERATOR,SPEED PULSE---- 4-E5
GLASS(L),DOOR-FRT-------- 3-I13
3-L13
GLASS(L),QUARTER-F.DOOR-- 3-L13
GLASS(R),DOOR-FRT-------- 3-I13
3-L13
GLASS(R),QUARTER-F.DOOR-- 3-L13
GLASS,BACK WINDOW-------- 4-C4
4-N3
GLASS,FRONT-WARNING UNIT- 3-C10
GLASS,WINDSHIELD--------- 4-C4
4-N3
GRILLE(L),DEF.NOZZLE----- 3-L10
GRILLE(L),DEMISTER------- 3-G11

GRILLE(L),EXTRACTOR------ 3-C6
GRILLE(L),SPEAKER-------- 3-J10
GRILLE(L),SPEAKER-T/TRIM- 4-K9
GRILLE(L),VENT.-DOOR TRIM 3-F15
3-K15
GRILLE(R),COWL-LOWER----- 3-N5
GRILLE(R),DEF.NOZZLE----- 3-L10
GRILLE(R),DEMISTER------- 3-G11
GRILLE(R),EXTRACTOR------ 3-C6
GRILLE(R),SPEAKER-T/TRIM- 4-K9
GRILLE(R),VENT.-DOOR TRIM 3-F15
3-J15
GRILLE,COWL-------------- 3-N5
GRILLE,EXTRACT.-T.S. TRIM 4-G10
GRILLE,SPEAKER----------- 4-N6
GRILLE,SPEAKER-FRT------- 3-C15
GROMMET------------------ 1-E5
3-C16
3-D9
3-F9
3-J16
3-K3
3-N16
GROMMET,AIRFLOW METER---- 1-F5
1-H5
GROMMET,DRAIN HOSE------- 3-M16
GROMMET,KNOB-METER SET--- 3-H10
GROMMET,PROTECTOR-------- 3-D4
GROMMET,SCREW------------ 3-C15
3-F15
3-G4
3-H15
3-I13
3-I15
3-K15
3-N5
3-N14
4-E9
4-F9
4-I9
4-I11
4-L9
GROMMET,SCREW-F. WIND.MLD 3-L3
GROMMET,SCREW-QTR TRIM--- 4-C9
GROMMET,SCREW-R.COME----- 3-E5
GROMMET,SCREW-REAR SPOILE 4-L11
GROMMET,SCREW-ROLL B.GARN 3-C6
GROMMET,SCREW-S.SPLR 'A'- 4-K11
GROMMET,SCREW-S.SPLR 'B'- 4-K11
GROMMET,SCREW-S.SPLR 'C'- 4-K11
GROMMET,SCREW-T/SIDE TRIM 4-D9
4-F9
4-I9
GROMMET,WASHER TANK------ 3-J3
4-D8
GUARD(L),MUD------------- 3-E7
3-N6
GUARD(R),MUD------------- 3-E7
3-N6
GUARD,HARNESS-FRONT------ 4-F10
4-J10
GUIDE(L),REAR------------ 4-E4
GUIDE(L),REG.-POWER WIND. 3-F14
GUIDE(R),REAR------------ 4-E4
GUIDE(R),REG.-POWER WIND. 3-F14
GUIDE,OIL---------------- 1-I9
GUIDE,POLE-NO.1---------- 3-M12
GUIDE'A'(L),GLASS-------- 3-I13
GUIDE'A'(R),GLASS-------- 3-I13
GUIDE'B'(L),GLASS-------- 3-I13
3-L13
GUIDE'B'(R),GLASS-------- 3-I13
3-L13
GUSSET(L),CROSSMEMBER NO1 3-J6
GUSSET(L),HINGE PILLAR--- 3-E8
GUSSET(L),INST.PANEL-DASH 3-D8
3-F8
GUSSET(L),LOCK TOWER----- 3-J8
GUSSET(L),WHEEL HOUSE---- 3-F8
GUSSET(R),CROSSMEMBER NO1 3-J6
GUSSET(R),HINGE PILLAR--- 3-C8
GUSSET(R),LOCK TOWER----- 3-I8
GUSSET(R),WHEEL HOUSE---- 3-D8
GUSSET,FRONT FLOOR------- 3-N8

GUSSET,FRONT FLOOR PAN---.3-M8

HANDLE(L),INNER---------- 3-D14
3-J14
HANDLE(L),OUT.----------- 3-E14
3-K14
HANDLE(R),INNER---------- 3-D14
3-J14
HANDLE(R),OUT.----------- 3-D14
3-E14
3-J14
3-K14
HANDLE,EMERGENCY--------- 3-E13
HANDLE,JACK-------------- 2-N6
HANGER,COAT-------------- 4-D11
HANGER,ENGINE------------ 1-J3
HANGER,ENGINE-REAR------- 1-J3
1-M3
HANGER,SILENCER---------- 2-E7
2-F7
2-I7
2-J7
HANGER,STRAP------------- 4-H9
HARNESS NO.1,REAR-------- 4-E7
HARNESS NO.2,REAR-------- 4-E7
HARNESS NO.3,REAR-------- 4-F7
HARNESS(L),ILLUMI.&SWITCH 3-G14
3-L14
HARNESS,BLOWER UNIT------ 3-G16
HARNESS,DOOR-DRIVER SIDE- 4-L7
HARNESS,DOOR-PASSENGER SI 4-L7
HARNESS,ENGINE----------- 4-H7
4-J7
HARNESS,FRONT------------ 4-D7
4-F7
HARNESS,INSTRUMENT------- 4-K7
HARNESS,INT.LAMP--------- 4-E7
4-G7
HARNESS,LIGHT-CLUSTER SW. 4-J5
HARNESS,REAR------------- 4-D7
4-F7
HARNESS,REAR DEFFOGER---- 4-L4
HARNESS,SLIDING ROOF----- 4-E4
HARNESS,WIPER-CLUSTER SW. 4-I5
4-J5
HARNESS,WIRE------------- 3-K16
3-N16
HEAD,CYL.-COMPRESSOR----- 4-D3
4-G3
HEADER,FRONT------------- 3-G8
HEADER,FRONT-INNER------- 3-D8
HEADER,FRONT-OUTER------- 3-N7
HEADER,REAR-------------- 3-G8
HEATER UNIT-------------- 3-E16
HINGE-------------------- 3-E11
HINGE NO.1,STORAGE BOX--- 4-N9
HINGE NO.2,STORAGE BOX--- 4-N9
HINGE(L),BONNET---------- 3-D6
HINGE(L),DOOR-LOWER------ 3-I13
3-L13
HINGE(L),DOOR-UPPER------ 3-H13
3-K13
HINGE(L),LID-LAMP-------- 3-H4
HINGE(L),TRUNK LID------- 3-G6
HINGE(R),BONNET---------- 3-D6
HINGE(R),DOOR-LOWER------ 3-H13
3-L13
HINGE(R),LID-LAMP-------- 3-H4
HINGE(R),TRUNK LID------- 3-G6
HINGE,CONSOLE LID-RR----- 3-E11
HINGE,DOOR--------------- 3-H13
3-K13
HINGE,GLASS HATCH-------- 4-K3
HINGE,GLOVE LID---------- 3-M10
HOLDER(L),MOTOR-REGULATOR 3-G14
HOLDER(LOW),ROD-IN.HANDLE 3-C14
3-I14
HOLDER(R),MOTOR-REGULATOR 3-F14

HOLDER(UP.),ROD-IN.HANDLE 3-C14
3-I14
HOLDER,BONNET STAY------- 3-E6
HOLDER,BONNET STAY-SHROUD 3-E6
HOLDER,BRUSH------------- 1-M11
HOLDER,CLUTCH------------ 2-N7
HOLDER,FUSE-------------- 4-D7
4-F7
HOLDER,HINGE-GRILLE------ 4-H9
HOLDER,JACK HANDLE------- 2-M6
3-G10
HOLDER,KEY CYLINDER------ 3-D10
HOLDER,MOTOR-H.L.CLEANER- 3-J3
HOLDER,NO. PLATE--------- 3-F3
HOLDER,P.B.VALVE--------- 2-C9
2-M8
HOLDER,PIN--------------- 4-F11
HOLDER,PIPE-------------- 2-E10
2-F9
2-F10
2-H9
HOLDER,SOCKET------------ 1-K12
HOLDER,STEERING GEAR----- 2-E5
2-H5
HOLDER,VALVE------------- 4-I3
HOLDER'A'---------------- 2-E10
3-J3
HOLDER'B'---------------- 3-J3
HOLDER'B',PIPE----------- 2-E10
HOLDER'C',PIPE----------- 2-E10
HOLDER'D',PIPE----------- 2-F10
HOLDER'K',PIPE-FUEL------ 2-F10
HOOD,METER & CLUSTER SW.- 3-F10
HOOK(L),REAR------------- 3-E9
HOOK(L),TIE DOWN-FRONT--- 3-C7
3-F7
HOOK(R),REAR------------- 3-E9
HOOK(R),TIE DOWN-FRONT--- 3-C7
3-E7
HOOK,GLOVE LID----------- 3-M10
HOOK,HOOD-REAR CORNER---- 4-L4
HOOK,SCREW-QTR TRIM------ 3-K13
4-I11
HOOK,SCREW-TRUNK MAT----- 4-D10
HOOK,TOP BOOT------------ 4-L4
HOOK'A',HOOD------------- 4-K4
HOOK'A',HOOD COVER-REAR-- 4-I10
HOOK'B',HOOD------------- 4-K4
HORN,HIGH TONE----------- 4-C6
HORN,LOW TONE------------ 4-C6
HOSE--------------------- 1-D5
1-I6
1-N6
2-F8
2-F10
3-E16
HOSE NO.1,FLEXIBLE------- 2-E9
2-G9
HOSE NO.1,WATER---------- 3-C16
HOSE NO.2,WATER---------- 3-C16
HOSE NO.3,WATER---------- 3-C16
HOSE,AIR----------------- 1-D6
1-G5
1-G6
1-H5
1-H6
1-I4
1-K6
1-L6
2-H7
2-K7
HOSE,AIR INTAKE---------- 1-F5
HOSE,AIR-A.B.S.V.&SURGE T 1-I5
HOSE,AIR-A.C.V.&VAC. PIPE 1-M6
1-N4
HOSE,AIR-AIR P.&BY.A.C.V. 1-H6
1-L6
HOSE,AIR-EXT.MANIFOLD---- 1-L6
HOSE,BREATHER------------ 2-F8
HOSE,DEFROSTER----------- 3-C16
HOSE,DRAIN--------------- 3-J16
3-M16
HOSE,DRAIN-REAR---------- 4-G4
HOSE,DRAIN-SUN ROOF FRONT 4-F4

HOSE,EVAPORATION--------- 2-E8
HOSE,FLEXIBLE------------ 2-E9
2-G9
2-N7
HOSE,FLEXIBLE-HIGH------- 3-I16
3-L16
HOSE,FLEXIBLE-LOW-------- 3-I16
3-L16
HOSE,FUEL---------------- 1-C5
1-D5
2-D10
2-F10
HOSE,FUEL MAIN----------- 1-C5
2-D10
HOSE,FUEL RETURN--------- 1-C5
HOSE,JOINT-FILLER PIPE--- 2-D8
HOSE,JOINT-FUEL TANK SIDE 2-E8
HOSE,OIL----------------- 1-E12
1-J7
HOSE,OIL-OIL PUMP-------- 1-D12
HOSE,PRESSURE------------ 2-K5
HOSE,RETURN-------------- 2-K5
HOSE,VACUUM-------------- 1-D12
1-G6
1-H6
1-I6
1-K6
1-M6
2-C9
2-D8
2-M8
HOSE,VENT---------------- 2-F8
HOSE,VENT.-PURGE CONT. V. 1-H6
HOSE,VENTILATION--------- 1-C5
1-H6
1-L6
1-N4
HOSE,WATER--------------- 1-G6
1-K6
1-L7
1-M6
HOSE,WATER BY-PASS------- 1-M6
HOSE,WATER SUB TANK------ 1-M7
HOSE,WATER-B.A.C.V.&R.H.- 1-G6
1-H6
HOSE,WATER-B.A.C.V.&T.B.- 1-G6
HOSE,WATER-T/C WATER-PIPE 1-M4
HOSE'A',WASHER----------- 4-D8
HOSE'B',WASHER----------- 4-D8
HOSE'C',WASHER----------- 4-E8
HOUSING(L),F.COMB.------- 3-L4
HOUSING(L),FOG LAMP------ 3-M4
3-N4
HOUSING(L),LAMP-LID HINGE 3-I4
HOUSING(L),LAMP-RR FENDER 3-E8
HOUSING(R),F.COMB.------- 3-L4
HOUSING(R),FOG LAMP------ 3-M4
HOUSING(R),LAMP-LID HINGE 3-I4
HOUSING(R),LAMP-RR FENDER 3-C8
HOUSING,AIR CLEANER------ 1-F5
1-H5
HOUSING,CLUTCH----------- 1-D9
HOUSING,CONVERTER-------- 1-C12
HOUSING,EXTENSION-------- 1-F9
1-H9
1-I12
HOUSING,FRONT------------ 1-I3
1-L3
HOUSING,GEAR------------- 2-D5
2-G5
HOUSING,INTERMEDIATE----- 1-F3
1-H3
HOUSING,REAR------------- 1-I3
1-L3
HOUSING,ROTOR-FRONT------ 1-E3
1-G3
HOUSING,ROTOR-REAR------- 1-E3
1-G3
HOUSING,WAX-------------- 1-J5
1-M5
HUB SET,CLUTCH-O.T. & REV 1-I10
1-N9
HUB SET,CLUTCH-1ST & 2ND- 1-F10
1-L9
HUB SET,CLUTCH-3RD & 4TH- 1-E10
1-K9
HUB(L),TOE CONTROL-OUTER- 2-E3
HUB(R),TOE CONTROL-OUTER- 2-E3
HUB,CLUTCH--------------- 1-C10
1-F10
1-I10
1-K9
1-L9
HUB,O/DRIVE CLUTCH------- 1-N13
HUB,REAR CLUTCH---------- 1-K13
HUB,W.PUMP PULLEY-------- 1-K7
HUB,WHEEL---------------- 2-M5
HYDRAULIC UNIT,A B S----- 2-J9

****
* *
* I *
* *
****

IGNITER,IG.COIL-LEADING-- 1-H11
IGNITER,IG.COIL-TRALING-- 1-H11
INDICATOR---------------- 3-D11
INDICATOR,LEVEL---------- 2-C9
2-M8
INJECTION,FUEL-M.P.ELECT. 1-E5
INSULATOR---------------- 2-C7
2-F8
2-H7
2-K7
INSULATOR NO.2.FRONT----- 3-F9
INSULATOR NO.3,FRONT----- 3-F9
INSULATOR(L)------------- 3-F9
INSULATOR(L),BONNET------ 4-E10
INSULATOR(L),CROSSMEMBER- 4-E10
INSULATOR(L),TIRE HOUSE-- 4-F10
4-J10
INSULATOR(R)------------- 3-F9
INSULATOR(R),BONNET------ 4-E10
INSULATOR(R),CROSSMEMBER- 4-E10
INSULATOR(R),TIRE HOUSE-- 4-E10
4-F10
4-I10
INSULATOR,BONNET--------- 4-E10
4-I10
INSULATOR,DASHBOARD------ 4-D10
4-I10
INSULATOR,EX.MANIFOLD---- 1-K4
INSULATOR,FUEL DIST.----- 1-E5
INSULATOR,HEAT----------- 1-M4
INSULATOR,HEAT-FRONT----- 3-E9
INSULATOR,HYDRAULIC UNIT- 2-J9
INSULATOR,INJECTION------ 1-E5
INSULATOR,OIL PAN-------- 1-G12
INSULATOR,ROD-ANTENNA---- 4-K6
INSULATOR,SPARE TIRE----- 4-E10
4-I10
INSULATOR,TANK-FUEL------ 3-F9
INSULATOR,THROTTLE BODY-- 1-G6
1-K6
INSULATOR,TOP CEILING---- 4-I4

****
* *
* J *
* *
****

JACK--------------------- 2-M6
2-N6
JOINT-------------------- 3-C14
3-I14
3-J3
JOINT SET,BALL----------- 2-E5
2-H5
JOINT SET,INNER---------- 2-D3
JOINT SET,OUTER---------- 2-D3
JOINT,BACK WINDOW MOULD-- 3-L3
JOINT,BALL--------------- 2-E5
2-H5
JOINT,ELBOW-------------- 4-I8
JOINT,ELBOW-W.TANK------- 4-D8
JOINT,FLARE-------------- 2-K9
JOINT,HOSE--------------- 4-D8
4-I8
JOINT,PIPE--------------- 1-F3
1-H3
2-E9
2-G9
2-J9
JOINT,RUBBER------------- 1-L4
1-N4
JOINT'L'----------------- 3-K3
JUNCTION(L),CORNER-Q/PANE 3-D8
3-J7
JUNCTION(R),CORNER-Q/PANE 3-I7
3-N7

****
* *
* K *
* *
****

KEY---------------------- 1-C7
1-D14
1-F7
1-I10
4-E3
KEY SET------------------ 3-C3
KEY SUB SET(L),DOOR------ 3-D3
KEY SUB SET(R),DOOR------ 3-D3
KEY SUB SET,GLOVE-------- 3-D3
KEY SUB SET,IG.SWICH----- 3-E3
KEY SUB SET,LIFT GATE---- 3-E3
KEY SUB SET,ST.LOCK------ 3-E3
KEY SUB SET,STOWAGE------ 3-E3
KEY SUB SET,TRUNK-------- 3-D3
KEY,BLANK---------------- 3-D3
KEY,BLANK-PRIMARY-------- 3-E3
KEY,FLY WHEEL------------ 1-E4
KEY,PRIMARY-------------- 3-C3
KEY,SECONDARY------------ 3-C3
KEY,SYNCHRONIZER--------- 1-F10
1-K9
KEY,WOODRUFF-PULLEY------ 1-C4
KNOB (R),DOOR LOCK------- 3-G14
3-K14
3-L14
KNOB NO.1---------------- 3-F16
KNOB(L),DOOR LOCK-------- 3-G14
3-L14
KNOB(L),KNUCKLE---------- 3-K11
3-K12
KNOB(R),KNUCKLE---------- 3-K11
3-K12
KNOB,BALANCE-TUNER------- 4-H6
KNOB,BALANCE-TUNER & DECK 4-H6
KNOB,CHANGE LEVER-------- 1-D11
1-M10
2-G10
KNOB,CLOCK--------------- 3-D10
KNOB,DUMMY-CLUSTER SWITCH 4-K5
KNOB,HAZARD-CLUSTER SW.-- 4-K5
KNOB,LIGHT-CLUSTER SWITCH 4-J5
KNOB,PANEL LIGHT-CLUSTER- 4-J5
KNOB,REAR DEFFOG-CLUSTER- 4-J5
KNOB,SMALL--CLUSTER SW.-- 4-J5
KNOB,SURROUND-REMOTE CONT 4-H6
KNOB,SWITCH-RR WIPER----- 4-K5
KNOB,TONE-TUNER---------- 4-I6
KNOB,TONE-TUNER & DECK--- 4-H6
KNOB,TRIPMETER----------- 3-I10
KNOB,TURN-CLUSTER SWITCH- 4-I5
KNOB,VOL.-REMOTE CONTROL- 4-H6
KNOB,VOLUME TUNER-------- 4-I6
KNOB,WASHER-CLUSTER SW.-- 4-J5
KNOB,WIPER-CLUSTER SWITCH 4-J5
KNUCKLE(L),RECLINING----- 3-D12
3-M12
KNUCKLE(L),STEERING------ 2-M5
KNUCKLE(R),RECLINING----- 3-K11
3-L12
KNUCKLE(R),STEERING------ 2-M5

****
* *
* L *
* *
****

LABEL,BATTERY------------ 4-H11
LABEL,BONNET STAY-------- 4-G11
LABEL,BURGLAR ALARM------ 4-G11
LABEL,CAUTION------------ 4-G11
LABEL,CAUTION-BATTERY BOX 4-G11
LABEL,CAUTION-RELAY------ 4-N5
LABEL,CAUTION-RETRACTABLE 4-G11
LABEL,EMISSION----------- 4-H11
LABEL,INDICATOR---------- 3-D10
LABEL,OIL---------------- 4-G11
LABEL,TEMPORARY TIRE----- 4-G11
LABEL,TIRE--------------- 4-G11
LABEL,UNLEADED FUEL------ 4-G11
LABEL,VAC.DIAPHRAGM------ 4-H11
LABEL'A',CAUTION-A/B----- 3-G13
4-G11
LABEL'B',CAUTION-A/B----- 3-G13
LAMP SET(L),FRT COMB----- 3-L4
LAMP SET(L),RR.COMB.----- 3-E5
LAMP SET(L),SIDE TURN---- 3-L4
LAMP SET(R),FRT COMB----- 3-L4
LAMP SET(R),RR.COMB.----- 3-E5
LAMP SET(R),SIDE TURN---- 3-L4
LAMP SUB SET(L),HEAD----- 3-G4
LAMP SUB SET(R),HEAD----- 3-G4
LAMP(L),COURTESY-DR TRIM- 3-H15
3-N14
LAMP(L),F.FOG------------ 3-N4
LAMP(L),SIDE TURN-RR----- 3-H5
LAMP(R),COURTESY-DR TRIM- 3-H15
3-N14
LAMP(R),F.FOG------------ 3-N4
LAMP(R),SIDE TURN-RR----- 3-H5
LAMP,CARGO ROOM---------- 3-J5
LAMP,COURTESY------------ 3-J5
LAMP,LICENSE------------- 3-H5
LAMP,STOP-HI.MOUNT.------ 3-F5
LATCH,TRUNK END TRIM----- 4-H10
LENS--------------------- 3-J5
LENS & BODY(L)----------- 3-L4
LENS & BODY(L),RR COMB.-- 3-E5
3-F5
LENS & BODY(R)----------- 3-L4
LENS & BODY(R),RR COMB.-- 3-E5
LENS NO.2(L),RR.COMB----- 3-F5
LENS NO.2(R),RR.COMB----- 3-F5
LENS(L),COURTESY LAMP---- 3-H15
3-N14
LENS(L),FRT COMB.-------- 3-L4
LENS(L),RR.COMB.--------- 3-F5
LENS(R),COURTESY LAMP---- 3-H15
3-N14
LENS(R),FRT COMB.-------- 3-L4
LENS(R),RR.COMB.--------- 3-E5
LENS,A/T INDICATOR-METER- 3-H10
LENS,COLUMN COVER-------- 3-D10
LENS,COURTESY------------ 3-J5
LENS,FRONT--------------- 3-I10
LENS,INDICATOR----------- 3-I10
LENS,INDICATOR-METER----- 3-H10
LENS,INTERIOR LAMP------- 4-F11
LENS,ROOM LAMP-HEAD CONS. 3-K5
LENS,SIDE WALL----------- 4-N9
LENS,STOP LAMP-HI.MOUNT-- 3-F5
LENS,WARNING------------- 3-I10
LENS,WARNING UNIT-------- 3-C10
LEVER-------------------- 1-L11
LEVER SET,THROTTLE BODY-- 1-J5
1-M5
LEVER(L),OPERATING------- 2-H3
LEVER(R),OPERATING------- 2-H3
LEVER,CHANGE------------- 1-C11
1-M10
LEVER,CONTROL------------ 1-N10
LEVER,LIFTER------------- 3-C12
LEVER,OPENER------------- 2-G3
LEVER,PARKING BRAKE------ 2-M9
LEVER,SELECT------------- 1-G14
2-G10
LEVER,THROTTLE----------- 1-J5
1-M5
LID(L),LAMP-------------- 3-H4
LID(L),TOP TRIM---------- 4-N8
LID(R),LAMP-------------- 3-H4
LID(R),TOP TRIM---------- 4-N8
LID,CONSOLE-------------- 3-E11
LID,FUEL FILLER---------- 2-G8
LID,INNER-STORAGE BOX---- 4-C10
LID,OUTER-STORAGE BOX---- 4-C10
4-N9
LID,SIDE-TRUNK ROOM------ 4-I9
4-L9
LID,TRUNK---------------- 3-G6
LIGHTER,CIGAR------------ 4-G5
LINER,HEAD-SOFT TOP------ 4-I4
LINK SET,MODE------------ 3-E16
LINK SET,TEMP------------ 3-E16
LINK(L),DEFLECTOR-------- 4-E4
LINK(R),DEFLECTOR-------- 4-E4
LINK,CONNECTING---------- 2-H3
LINK,CONTROL-LWR ARM----- 2-I4
LINK,CONTROL-STAB-------- 2-H4
2-J6
LINK,LATERAL------------- 2-F4
LINK,SUB-LOWER ARM------- 2-J4
LINK,WIPER--------------- 4-F8
LOCK(L),DOOR------------- 3-C14
3-I14
LOCK(L),GLASS HATCH------ 4-L3
LOCK(L),HINGE-TOP-------- 4-K4
LOCK(L),TOP-------------- 4-K4
LOCK(R),DOOR------------- 3-C14
3-I14
LOCK(R),GLASS HATCH------ 4-K3
LOCK(R),HINGE-TOP-------- 4-K4
LOCK(R),TOP-------------- 4-J4
LOCK,BONNET-------------- 3-E6
LOCK,CONSOLE-REAR-------- 3-E11
LOCK,LID----------------- 3-G6
LOUVER,CENTER------------ 3-G11
LOUVER,LAP-LOWER PANEL--- 3-M10

****
* *
* M *
* *
****

MAGNET------------------- 1-G12
1-H9
4-H3
MANIFOLD,EXHAUST--------- 1-K4
MANIFOLD,EXTENSION-IN.MAN 1-I4
MANIFOLD,INLET----------- 1-H4
1-J4
MAT,FLOOR---------------- 4-F10
4-J10
MAT,PARKING BRAKE-------- 4-F10
4-J10
MAT,REAR END------------- 4-J10
MAT,TRUNK ROOM----------- 4-G10
4-J10
MEMBER NO.3,CROSS-LOWER-- 3-I8
3-L8
MEMBER NO.3,CROSS-UPPER-- 3-I8
3-L8
MEMBER NO.4,CROSS-------- 3-I8
3-M8
MEMBER,CRASH PAD--------- 3-K10
MEMBER,CROSS------------- 2-J6
3-H6
3-J6
MEMBER,CROSS-FRONT FRAME- 3-F9
MEMBER,FRONT FLOOR------- 3-N8
MEMBER,REAR END---------- 3-D8
MEMBER,T/MISSION MT.----- 2-C7
2-D7
METAL,ROTOR-------------- 1-F4
METAL,STATIONARY GEAR---- 1-F3
1-H3
METER SET---------------- 3-H10

METER,BOOST & OIL-------- 3-I10
METER,FUEL & THERMO------ 3-I10
METER,OIL & VOLTAGE------ 3-I10
MIRROR(L),DOOR----------- 4-E11
4-N10
MIRROR(R),DOOR----------- 4-E11
4-N10
MIRROR,INTERIOR---------- 4-E11
4-N10
MODULE,AIR BAG----------- 3-G13
MODULE,POWERTRAIN CONTROL 4-C5
4-D5
MODULE,PWT.CONTROL------- 4-D5
MOTOR-------------------- 4-H8
MOTOR(L)----------------- 3-J4
MOTOR(L),TOP------------- 4-J4
MOTOR(L),WINDOW---------- 3-F14
MOTOR(R)----------------- 3-J4
MOTOR(R),TOP------------- 4-J4
MOTOR(R),WINDOW---------- 3-F14
MOTOR,BLOWER------------- 3-G16
MOTOR,COOLING FAN-------- 1-L7
MOTOR,SLIDING ROOF------- 4-E4
MOTOR,WIPER-------------- 4-F8
MOULD SET(L),F. SIDE----- 3-L3
MOULD SET(R),F. SIDE----- 3-L3
MOULD(L),REAR------------ 3-M3
MOULD(L),SASH-DOOR------- 3-H13
3-K13
MOULD(L),STEP-FRT-------- 3-M3
MOULD(L),STEP-RR--------- 3-M3
3-N3
MOULD(R),REAR------------ 3-M3
MOULD(R),SASH-DOOR------- 3-H13
3-K13
MOULD(R),STEP-FRT-------- 3-M3
MOULD(R),STEP-RR--------- 3-M3
MOULD,RR.WINDOW---------- 3-L3
MOULD,WINDOW-FRONT------- 3-L3

****
* *
* N *
* *
****

NOZZLE(L),DEFROSTER------ 3-C16
NOZZLE(R),DEFROSTER------ 3-C16
NOZZLE,WASHER-F.WIND----- 4-E8
NOZZLE,WASHER-H.L.CLEANER 3-K3
NOZZLE,WASHER-R.WIND----- 4-H8
NUT---------------------- 1-D13
1-I12
1-J5
1-K4
1-M5
1-N4
2-C3
2-D3
2-F3
2-F4
2-G6
2-G7
2-G10
2-I4
2-J4
2-J6
2-J7
2-M5
3-C13
3-G13
3-H12
4-E3
4-H8
NUT SET------------------ 1-J11
NUT,ADJUST--------------- 2-E5
2-H5
NUT,ADJUST-S/ROOF FRAME-- 4-G4
NUT,BONNET BULGE--------- 3-F6
NUT,CAP-REAR SPOILER----- 4-L11
NUT,CLIP----------------- 3-G3
NUT,EXPANSION------------ 3-N10
4-J11
4-K10
NUT,FLANGE--------------- 2-F4
NUT,FLANGE-CAP----------- 3-C7
4-D10
4-I10
NUT,HOOD OUTER----------- 4-I4
NUT,HUB------------------ 2-K6
NUT,LOCK----------------- 1-E4
2-J3
2-N3
NUT,LOCK-CLUTCH HUB------ 1-C10
1-J10
NUT,LOCK-COUNTER SHAFT BR 1-H10
1-N9
NUT,LOCK-RACK------------ 2-D5
2-G5
NUT,LOWER ARM------------ 2-E3
NUT,MOUNTING-ANTENNA----- 4-K6
NUT,SHAFT---------------- 1-G14
NUT,SPEED---------------- 3-E15
3-J15
4-G10
NUT,SPEED-STEERING LOCK-- 3-D3
NUT,SPRING--------------- 3-G3
3-J10
4-L11
NUT,SPRING-AIR DAM SKIRT- 4-K11
NUT,STOPPER-------------- 1-J7
NUT,WIPER ARM-FRONT------ 4-F8

****
* *
* O *
* *
****

OIL,COMPRESSOR----------- 4-E3
OPENER,FILLER LID-------- 2-G8
OPENER,L/GATE & F/LID---- 2-G8
OPENER,T/LID & F/LID----- 2-G8
ORIFICE------------------ 1-G5
1-H6
1-I5
1-L6
ORNAMENT,CAR NAME-REAR--- 3-L5
ORNAMENT,MAKER NAME-REAR- 3-L5
ORNAMENT,STEREO---------- 4-G6
ORNAMENT,STEREO-UPPER---- 4-G6

****
* *
* P *
* *
****

PACK,SILENT-------------- 3-F11
PAD---------------------- 4-K6
PAD NO.1,GARNISH-UPPER--- 3-L10
PAD NO.1,INST PANEL------ 3-J10
PAD NO.2,GARNISH-UPPER--- 3-L10
PAD SUB SET,FRT CALIPER-- 2-E6
2-F6
PAD SUB SET,RR CALIPER--- 2-I3
PAD(CTR),SPACER-SOFT TOP- 4-I4
PAD(L),CUSHION-FRT------- 3-E12
3-N12
PAD(L),SIDE-DASHBOARD---- 4-F10
4-J10
PAD(L),SPACER-SOFT TOP--- 4-I4
PAD(R),BACK-FRT---------- 3-C12
PAD(R),CUSHION-FRT------- 3-M11
3-M12
PAD(R),SIDE-DASHBOARD---- 4-F10
4-J10
PAD(R),SPACER-SOFT TOP--- 4-I4
PAD,ACCEL.PEDAL---------- 2-C8
PAD,CHANGE BOOT---------- 3-F11
PAD,CRASH---------------- 3-J10
PAD,FLOOR-REAR----------- 4-I10
PAD,FOOT REST------------ 2-I8
2-K8
PAD,FRONT FLOOR---------- 4-E10
4-I10
PAD,FUEL TANK------------ 2-E8
PAD,HORN----------------- 2-K4
PAD,MOUNTING-ANTENNA----- 4-K6
PAD,PEDAL---------------- 2-H8
2-K8
PAD,PROTECTOR------------ 4-N6
PAD,REAR SUSPENSION------ 4-K6
PAD,SIDE-FRT CUSHION----- 3-G12
3-H12
PAD,STRAGE BOX----------- 4-E10
4-I10
PAD,SUSPENSION----------- 4-J10
PAD,TANK PROTECTOR------- 2-K9
2-M6
PAD,TRUNK---------------- 4-F10
PAN,FLOOR-FRONT---------- 3-H8
3-K8
PAN,FLOOR-REAR----------- 3-H8
3-K8
PAN,OIL------------------ 1-I3
1-J12
1-L3
PAN,SPARE TIRE----------- 3-H8
3-L8
PANEL(L),COWL SIDE------- 3-D8
3-J7
PANEL(L),DUCT-RAD. SHROUD 3-I6
3-K6
PANEL(L),FENDER-FRT.----- 3-D7
3-M6
PANEL(L),FENDER-REAR----- 3-F8
3-L7
PANEL(L),LOWER----------- 3-K10
PANEL(L),LOWER-SLDG ROOF- 4-D4
PANEL(L),OUT.-FRT DOOR--- 3-H13
3-K13
PANEL(L),QTR-REAR END---- 3-K7
PANEL(L),QUARTER--------- 3-D8
3-J7
PANEL(L),SHROUD---------- 3-I6
3-K6
PANEL(L),SHROUD-SIDE----- 3-I6
PANEL(L),SIDE SEAL------- 3-J8
3-N8
PANEL(L),SIDE SILL------- 3-E8
3-K7
PANEL(L),SIDE-CRASH PAD-- 3-N10
PANEL(L),WHEEL APRON----- 3-D7
3-E7
3-M6
3-N6
PANEL(L),WHEEL HOUSE----- 3-D8
3-J7
PANEL(R),COWL SIDE------- 3-H7
3-N7
PANEL(R),DUCT-RAD. SHROUD 3-I6
3-K6
PANEL(R),FENDER-FRT.----- 3-D7
3-M6
PANEL(R),FENDER-REAR----- 3-F8
3-L7
PANEL(R),LOWER----------- 3-K10
PANEL(R),LOWER-SLDG ROOF- 4-D4
PANEL(R),OUT.-FRT DOOR--- 3-H13
3-K13
PANEL(R),QTR-REAR END---- 3-J7
PANEL(R),QUARTER--------- 3-H7
3-N7
PANEL(R),SHROUD---------- 3-H6
3-J6
PANEL(R),SHROUD-SIDE----- 3-H6
PANEL(R),SIDE SILL------- 3-C8
3-I7
3-I8
3-M8
PANEL(R),SIDE-CRASH PAD-- 3-N10
PANEL(R),SIDE-RR FLOOR--- 3-H8
3-K8
PANEL(R),WHEEL APRON----- 3-D7
3-M6
PANEL(R),WHEEL HOUSE----- 3-I7
3-N7
PANEL(RR ,L),QUARTER-LOW. 3-D8
3-J7
PANEL(RR ,R),QUARTER-LOW. 3-H7
3-N7
PANEL,BULK HEAD---------- 3-N8
PANEL,CENTER------------- 3-C10
PANEL,COWL--------------- 3-G7
PANEL,DASH-LOWER--------- 3-G7
PANEL,DASH-UPPER--------- 3-G7
PANEL,RAD.SHROUD--------- 3-H6
3-J6
PANEL,REAR END----------- 3-D8
3-J7
PANEL,ROOF--------------- 3-G8
4-J4
PANEL,SLIDING ROOF------- 4-D4
PANEL,SWITCH------------- 3-D11
PARTS KIT,INN.-BRAKE----- 2-D9
2-N8
PARTS KIT,INN.-CLUTCH---- 2-M7
PARTS KIT,INNER---------- 2-L7
2-N8
PARTS SET---------------- 4-G8
4-K8
PARTS SET,ST. WHEEL------ 2-K4
PASS,OIL----------------- 1-F9
1-I9
PAWL,PARKING------------- 1-H14
PEDAL & ARM-------------- 2-C8
PEDAL,BRAKE-------------- 2-I8
2-K8
PEDAL,CLUTCH------------- 2-H8
PELLET,THERMO------------ 1-J7
PELLET,THERMO-ECCENTRIC-- 1-C4
PIECE,DISTANCE----------- 2-C4
2-K3
PIECE,SIDE--------------- 1-F4
PIECE,2ND.-APEX SEAL----- 1-F4
PILLAR(L),FRONT-OUT.----- 3-F8
3-L7
PILLAR(L),FRT.-INNER----- 3-E8
3-K7
PILLAR(L),HINGE---------- 3-E8
3-K7
PILLAR(L),HINGE-OUT.----- 3-F8
PILLAR(L,UP.),FRONT------ 3-K7
PILLAR(R),FRONT-OUT.----- 3-F8
3-K7
3-L7
PILLAR(R),FRT.-INNER----- 3-C8
3-I7
PILLAR(R),HINGE---------- 3-C8
3-I7
PILLAR(R),HINGE-OUT.----- 3-F8
PILLAR(R,UP.),FRONT------ 3-I7
PIN---------------------- 2-E6
2-J8
2-L3
PIN,BELT-BACK WINDOW----- 4-H4
PIN,CHECKER-------------- 3-C14
3-I14
PIN,COMPRESSOR----------- 4-G3
PIN,DOWEL---------------- 1-I3
1-L3
PIN,DRIVEN GEAR---------- 1-D7
1-H7
PIN,GUIDE---------------- 2-H3
PIN,GUIDE-FRT CALIPER---- 2-D6
PIN,INTER LOCK----------- 1-K10
1-N10
PIN,INTERIOR MIRRUR------ 4-C11
PIN,JOINT---------------- 3-I12
PIN,LOCK----------------- 2-H3
PIN,PAD-FRONT BRAKE------ 2-E6
PIN,PIVOT-CLUTCH REL.FORK 1-C9
1-D9
PIN,ROLL----------------- 4-E3
PIN,SNAP----------------- 2-G10
2-I8
2-K8
PIN,SPRING--------------- 1-E3
1-G3
PIN.SPRING-STEERING GEAR- 2-E5
2-H5
PIN,TOP INDICATOR-------- 1-J3
1-M3
PIN,TUBULAR-------------- 1-I3
1-L3
PINION------------------- 1-L11
PINION,DIFFERENTIAL------ 2-K3
PIPE--------------------- 3-J3
4-D6
4-D8
4-I3
4-J3
4-L6
PIPE NO.1,COOLER--------- 3-I16
PIPE NO.2,OIL FILLER----- 1-H3
PIPE NO.2,VACUUM--------- 1-I6
1-M6
PIPE NO.4,COOLER--------- 3-I16
3-L16
PIPE NO.5,COOLER--------- 3-I16
3-L16
PIPE NO.6,COOLER--------- 3-I16
3-L16
PIPE NO.7,COOLER--------- 3-I16
3-L16
PIPE NO.8,COOLER--------- 3-L16
PIPE(L),BRAKE-FRONT------ 2-E9
2-F9
2-G9
2-H9
PIPE(L),REAR BRAKE------- 2-F9
2-H9
PIPE(R),BRAKE-FRONT------ 2-E9
2-G9
PIPE(R),REAR BRAKE------- 2-F9
2-H9
PIPE,AIR----------------- 1-L4
2-H7
2-K7
PIPE,AIR INTAKE-INT.COOLE 1-M4
PIPE,AIR-VALVE ACTUATOR-- 1-I6
PIPE,BRAKE-FRT----------- 2-E9
2-G9
PIPE,BRAKE-REAR---------- 2-F9
2-H9
PIPE,CLUTCH-------------- 2-N7
PIPE,DRAIN-RR FENDER----- 3-H7
PIPE,EVAPORATION--------- 2-D10
2-E8
PIPE,EVAPORATION-FRONT--- 2-D10
PIPE,EVAPORATOR---------- 2-D10
PIPE,EXHAUST-FRONT------- 2-E7
2-I7
PIPE,FILLER-------------- 2-D8
PIPE,FILLER NO.2--------- 2-E8
PIPE,FILLER-F.WASHER TANK 4-D8
PIPE,FILLER-WASHER TANK-- 3-K3
PIPE,FUEL-MAIN----------- 2-D10
PIPE,FUEL-RETURN--------- 2-D10
PIPE,HEATER-------------- 3-C16
PIPE,HEATER UNIT--------- 3-E16
PIPE,MIDDLE-------------- 2-F7
2-J7
PIPE,OIL----------------- 1-D12
1-N4
PIPE,OIL FILLER---------- 1-F3
1-H3
PIPE,OIL INLET----------- 1-M4
1-N4
PIPE,OIL LEVEL GAUGE----- 1-E3
1-G3
PIPE,OIL OUTLET-F.COVER-- 1-G7
PIPE,PEDAL--------------- 2-I8
2-K8
PIPE,REAR WASHER-LOWER--- 4-H8
PIPE,REAR WASHER-UPPER--- 4-H8
PIPE,RETURN-------------- 2-K5
PIPE,SCREEN WASHER------- 4-E8
PIPE,VACUUM-------------- 1-D12
1-G6
1-K6
2-C9
2-M8
PIPE,VANE PUMP----------- 2-L5
PIPE,VINYL--------------- 4-D8
PIPE,WATER IN -T/C------- 1-M4
PIPE,WATER OUT -T/C------ 1-M4
PIPE'A',CYLINDER--------- 2-F5
2-I5

PIPE'A',ST. GEAR--------- 2-E5
2-I5
PIPE'B',CYLINDER--------- 2-F5
2-I5
PIPE'B',ST. GEAR--------- 2-I5
PISTON,ACCUM------------- 1-E13
PISTON,ACCUMULATOR------- 1-K12
PISTON,BAND SERVO-------- 1-H12
PISTON,CLUTCH------------ 1-I13
PISTON,FLOATING---------- 2-D9
PISTON,LOW & REVERSE----- 1-D14
PISTON,N/D ACCUM--------- 1-E13
PISTON,O.W.VALVE--------- 2-L7
PISTON,PRIMARY----------- 2-D9
2-N8
PISTON,1/2 ACCUM--------- 1-E13
PLATE-------------------- 1-D4
2-K8
3-C6
4-H3
PLATE NO.1,PRINT--------- 3-H10
3-I10
PLATE NO.1,SEAL---------- 3-M16
PLATE NO.1,SET-F. BUMPER- 3-F3
PLATE NO.2(L),SET-F.BUMPE 3-F3
PLATE NO.2(R),SET-F.BUMPE 3-F3
PLATE NO.2,SEAL---------- 3-N16
PLATE NO.3(L),SET-F.BUMPE 3-G3
PLATE NO.3(R),SET-F.BUMPE 3-F3
PLATE SET,REAR DAMPER---- 2-F4
PLATE(C),SET-REAR BUMPER- 3-H3
PLATE(F.,L),CLOSING------ 3-E7
3-N6
PLATE(F.,R),CLOSING------ 3-D7
3-M6
PLATE(FRT),SET-ROOF PANEL 4-J4
PLATE(L),CORNER---------- 3-E8
PLATE(L),END------------- 3-J7
PLATE(L),FIXING-SIDE SILL 3-E8
PLATE(L),FRONT SCUFF----- 4-I9
4-L9
PLATE(L),KICK-D.TRIM----- 3-C15
3-I15
PLATE(L),REAR CORNER-IN.- 3-D8
PLATE(L),SEAL------------ 3-D8
PLATE(L),SEAL-CLOSING---- 3-E7
3-N6
PLATE(L),SEAL-RR S/FRAME- 3-I8
3-M8
PLATE(L),SET-RR BUMPER S. 3-H3
3-I3
PLATE(R),CORNER---------- 3-C8
PLATE(R),END------------- 3-H7
PLATE(R),FIXING-SIDE SILL 3-C8
PLATE(R),FRONT SCUFF----- 4-H9
4-L9
PLATE(R),KICK-D.TRIM----- 3-C15
3-I15
PLATE(R),REAR CORNER-IN.- 3-N7
PLATE(R),SEAL------------ 3-N7
PLATE(R),SEAL-CLOSING---- 3-E7
3-N6
PLATE(R),SEAL-RR S/FRAME- 3-H8
3-K8
PLATE(R),SET-REAR BUMPER- 3-H3
PLATE(R),SET-RR BUMPER S. 3-H3
PLATE(RR.,L),CLOSING----- 3-E7
3-N6
PLATE(RR.,R),CLOSING----- 3-D7
3-M6
PLATE(RR),SET-ROOF PANEL- 4-J4
PLATE(UP.),SET-FASCIA---- 3-H6
3-J6
PLATE(UP,L),COWL SIDE-OU- 3-H7
3-M7
PLATE(UP,R),COWL SIDE-OU- 3-H7
3-M7
PLATE,ABSORBER----------- 1-K4
PLATE,BACKING------------ 1-C12
PLATE,BAFFLE-DIFF CASING- 2-D4
2-M3
PLATE,CAM---------------- 2-I4
PLATE,CAUTION------------ 4-H11
PLATE,CLAMP-------------- 2-D5
PLATE,CLAMP-------------- 2-E5
2-G5
2-H5
PLATE,COATING-SHAFT------ 2-N4
PLATE,CONTACT------------ 2-M4
PLATE,CRANKSHAFT PULLEY-- 1-C4
PLATE,DISC--------------- 2-F3
PLATE,DISHED------------- 1-I13
PLATE,DRAIN PLUG-UNDER C. 1-H9
PLATE,DRIVE-------------- 1-C12
PLATE,DRIVEN------------- 1-E14
1-I13
1-J13
PLATE,EARTH-MOTOR ANTENNA 4-K6
PLATE,FIXING------------- 3-G8
PLATE,FLASHER-C. P. UNIT- 4-M5
PLATE,FRONT-SOFT TOP----- 4-I4
PLATE,GUARD-CALIPER BRAKE 2-G3
PLATE,HOLDER-BRUSH------- 4-G8
4-K8
PLATE,HUB/DISK----------- 2-M5
PLATE,LIGHT GUIDE-METER-- 3-I10
PLATE,LOCATING----------- 1-I4
PLATE,LOCK--------------- 2-C4
2-L3
4-N9
PLATE,LOCK-ASHTRAY------- 3-E10
PLATE,MANUAL------------- 1-G14
PLATE,MIDDLE------------- 1-C7
1-F7
PLATE,MOUNTING-RR DAMPER- 2-F4
PLATE,PARTITION---------- 3-C10
PLATE,RETAINING---------- 1-C14
1-E14
1-G14
1-J13
PLATE,SEAL--------------- 3-J16
PLATE,SEAL-FRONT BUMPER-- 3-F3
PLATE,SEAL-RAD. SHROUD--- 3-I6
3-L6
PLATE,SEPARATOR---------- 1-C13
1-D13
PLATE,SET---------------- 2-K4
PLATE,SET-FASCIA--------- 3-H6
3-J6
PLATE,SET-HINGE BRACKET-- 3-M7
PLATE,SET-HOLDER--------- 3-E6
PLATE,SET-HOOD REAR------ 4-I4
PLATE,SHROUD-UPPER------- 3-H6
3-J6
PLATE,SIDE'A'------------ 1-C13
PLATE,SIDE'B'------------ 1-C13
PLATE,SIDE'D'------------ 1-N12
PLATE,STABILIZER--------- 2-J6
PLATE,STABILIZER-RR------ 2-H4
PLATE,THRUST------------- 1-D4
PLATE,UPPER-------------- 3-D11
PLATE,VALVE-------------- 4-D3
4-H3
PLATE,WATER BAFFLE------- 1-K7
PLATE'A'(L),CLOSING-FRT-- 3-I8
3-M8
PLATE'A'(L),CLOSING-RR--- 3-I8
3-M8
PLATE'A'(R),CLOSING-FRT-- 3-H8
3-K8
PLATE'A'(R),CLOSING-RR--- 3-H8
3-K8
PLATE'B'(L),CLOSING-FRAME 3-I8
PLATE'B'(R),CLOSING-FRAME 3-H8
PLATE'C'(L),CLOSING-FRAME 3-I8
3-M8
PLATE'C'(R),CLOSING-FRAME 3-H8
3-L8
PLATE'E',SIDE------------ 1-E13
PLATE'F',SIDE------------ 1-E13
PLUG--------------------- 1-F9
1-I9
1-I11
1-K3
1-N3
3-C9
PLUG SET,SPARK----------- 1-F11
PLUG,BLIND--------------- 1-C9
PLUG,BLIND--------------- 1-I3
1-L3
PLUG,CAP----------------- 1-N10
PLUG,COMPRESSOR---------- 4-G3
PLUG,CORNER SEAL--------- 1-F4
PLUG,DRAIN--------------- 2-D8
3-C9
3-D9
PLUG,DRAIN HOSE-RR FLOOR- 4-I4
PLUG,DRAIN-VENT. HOSE---- 2-F8
PLUG,HOLE---------------- 3-C9
3-D9
PLUG,HOLE-F.SIDE FRAME--- 3-C9
PLUG,HOLE-HATCH FRAME LOW 4-L3
PLUG,HOLE-HATCH FRAME UP. 4-L3
PLUG,HOLE-LAMP & WIP.HARN 4-L3
PLUG,JET----------------- 1-E3
1-G3
PLUG,LOCK UP------------- 1-E13
PLUG,MAGNET-------------- 1-F9
1-H9
2-J3
2-N3
PLUG,OIL JET------------- 1-C4
PLUG,PINION-------------- 2-D5
2-G5
PLUG,REGULATOR----------- 1-N12
PLUG,SERVICE COVER------- 2-F9
2-H7
2-K7
PLUG,SOCKET-------------- 1-F3
1-H3
PLUG,SPARK--------------- 1-F11
PLUG,SQUARE HEAD--------- 1-G12
PLUG,STOPPER------------- 1-D13
PLUG'A',BLIND-S.SPOILER-- 3-N3
PLUG'B',BLIND-S.SPOILER-- 3-C4
PLUNGER,CONTROL---------- 1-C7
1-F7
1-K3
1-M3
POCKET(L),DOOR TRIM------ 3-J15
POCKET(R),DOOR TRIM------ 3-J15
POLE,ANTENNA------------- 4-L6
PROTECTOR---------------- 1-C5
1-D13
1-J7
1-L3
2-I8
3-J16
4-G5
4-L11
4-N4
PROTECTOR NO.2----------- 2-H7
PROTECTOR(L),AIR BAG----- 3-F7
PROTECTOR(L),DOOR SASH--- 3-M13
PROTECTOR(L),RETRACTABLE- 3-H4
PROTECTOR(L),RR.COMB----- 3-F5
PROTECTOR(L),SPLASH------ 3-D8
3-J7
PROTECTOR(R),AIR BAG----- 3-F7
PROTECTOR(R),DOOR SASH--- 3-M13
PROTECTOR(R),RETRACTABLE- 3-H4
PROTECTOR(R),RR.COMB----- 3-F5
PROTECTOR(R),SPLASH------ 3-I7
3-N7
PROTECTOR,BONNET BULGE--- 3-D6
PROTECTOR,CONVERTER------ 2-H7
2-K7
PROTECTOR,COWL GRILLE---- 3-N5
PROTECTOR,EVAPO HOSE----- 2-E10
PROTECTOR,EVAPO HOSE-FRT- 2-E10
PROTECTOR,FORMING BAR---- 4-I4
PROTECTOR,FRONT PIPE----- 2-K7
PROTECTOR,FUEL HOSE------ 2-D10
PROTECTOR,HANGER BRACKET- 2-H7
PROTECTOR,HOSE-SUB TANK-- 1-N7
PROTECTOR,NO. PLATE------ 3-G3
PROTECTOR,R.FINISHER----- 3-N5
PROTECTOR,RR SPOILER-CTR- 4-L11
PROTECTOR,RR.FINISHER---- 3-N5
PROTECTOR,SPONGE--------- 1-N4
PROTECTOR,SPONGE-AIR HOSE 1-H6
PROTECTOR,SPONGE-WAT.HOSE 1-H6
PROTECTOR,STOP LAMP-HI.MO 3-F5
PROTECTOR'A'(L),SIDE----- 3-D4
PROTECTOR'A'(R),SIDE----- 3-D4
PROTECTOR'B'(L),SIDE----- 3-D4
PROTECTOR'B'(R),SIDE----- 3-D4
PROTECTOR'C'(L),SIDE----- 3-E4
PROTECTOR'C'(R),SIDE----- 3-D4
3-E4
PROTECTOR'D'(L),SIDE----- 3-E4
PROTECTOR'D'(R),SIDE----- 3-E4
PROTECTOR'E'(L),SIDE----- 3-E4
3-F4
PROTECTOR'E'(R),SIDE----- 3-E4
PROTR,STUD-DIVISION CHAN- 3-M13
PULLEY------------------- 1-J11
4-E3
4-H3
PULLEY,AIR PUMP---------- 1-E6
PULLEY,CRANKSHAFT-------- 1-C4
PULLEY,IDLE-------------- 1-C8
PULLEY,VANE PUMP--------- 2-K5
PULLEY,WATER PUMP-------- 1-K7
PUMP KIT----------------- 3-K3
PUMP SET,WATER----------- 1-K7
PUMP,AIR----------------- 1-D6
PUMP,FUEL---------------- 2-D8
PUMP,METERING OIL-------- 1-D7
1-G7
PUMP,OIL----------------- 1-C7
1-C12
1-D12
1-F7
PUMP,VANE---------------- 2-K5
PUMP,WASHER-------------- 4-E8
4-I8
RACE,BEARING------------- 1-L13
RACE,BEARING OIL DISTR--- 1-E14
1-M13
RACE,BRG.HUB CLUTCH------ 1-N13
RACE,BRG.PUMP COVER------ 1-L13
RACE,INNER--------------- 1-G10
1-H12
1-L9
RACE,OUTER--------------- 1-D14
RACE,OUTER-ONE WAY CLUTCH 1-N13
RACE,SHELL BEARING------- 1-K13
RACE,SIDE-ONE WAY CLUTCH- 1-M13
RACK,STEERING GEAR------- 2-D5
2-G5
RADIATOR----------------- 1-L7
RAIL(L),GUIDE------------ 4-D4
RAIL(L),RAIN------------- 3-E8
3-K7
RAIL(L),ROOF-INNER------- 3-J7
RAIL(L),ROOF-OUTER------- 3-K7
RAIL(R),GUIDE------------ 4-D4
RAIL(R),RAIN------------- 3-C8
3-J7
RAIL(R),ROOF-INNER------- 3-H7
RAIL(R),ROOF-OUTER------- 3-I7
RECTIFIER---------------- 1-I11
4-G7
REFRIGERANT DRUM--------- 3-K16
REGULATOR(L),WINDOW------ 3-F14
3-K14
REGULATOR(R),WINDOW------ 3-F14
3-K14
REGULATOR,PRESSURE------- 1-D7
1-G7
REGULATOR,[illegible]---- 1-I11
REINF.(L),COWL SIDE PANEL 3-H7
3-M7
REINF.(L),COWL SIDE-INNER 3-H7
3-M7
REINF.(L),F. PILLAR INNER 3-M7
REINF.(L),NO.3 MEMBER-UP. 3-N8
REINF.(L),QTR PANEL-REAR- 3-E8
REINF.(L),RAD. SHROUD---- 3-I6
REINF.(L),ROOF RAIL------ 3-K7
REINF.(L),SIDE SILL------ 3-E8
3-K7
REINF.(L),STRIKER-------- 3-E8
REINF.(L),WHEEL APRON---- 3-D7
REINF.(LWR),FINISHER-REAR 3-N5
REINF.(R).ROOF RAIL------ 3-I7
REINF.(R),A.B.S.-APRON--- 3-M6
REINF.(R),COWL SIDE PANEL 3-H7
3-M7
REINF.(R),COWL SIDE-INNER 3-H7
3-M7
REINF.(R),F. PILLAR INNER 3-M7
REINF.(R),NO.3 MEMBER-UP. 3-L8
REINF.(R),QTR PANEL-REAR- 3-N7
REINF.(R),RAD. SHROUD---- 3-H6
REINF.(R),SIDE SILL------ 3-C8
3-I7
REINF.(R),STRIKER-------- 3-C8
REINF.(R),WHEEL APRON---- 3-D7
REINF.(UP),FINISHER-REAR- 3-N5
REINF.,CROSSMEMBER NO3-UP 3-L8
REINF.,JOINT HOSE-FUEL--- 2-E8
REINF.,SPARE TIRE-------- 3-L8
REINF.'A'(L),FRONT FLOOR- 3-M8
REINF.'A'(L),RAD. SHROUD- 3-K6
REINF.'A'(R),FRONT FLOOR- 3-K8
REINF.'A'(R),RAD. SHROUD- 3-J6
REINF.'B'(L),FRONT FLOOR- 3-M8
REINF.'B'(L),RAD. SHROUD- 3-K6
REINF.'B'(R),FRONT FLOOR- 3-K8
REINF.'B'(R),RAD. SHROUD- 3-J6
REINF.'C'(L),FRONT FLOOR- 3-M8
REINF.'C'(L),RAD. SHROUD- 3-K6
REINF.'C'(R),FRONT FLOOR- 3-K8
REINF.LOCK-R.END PANEL--- 3-M7
REINFORCEMENT,BUMPER----- 3-F3
3-H3
REINFORCEMENT,ROOF------- 3-G8
REINFORCEMENT,TUNNEL-FRT- 3-K8
REINFORCEMENT,TUNNEL-REAR 3-L8
RELAY-------------------- 3-G16
3-K16
3-N16
RELAY & COVER,NORMAL CLOS 4-M5
RELAY & COVER,NORMAL OPEN 3-N16
4-E5
4-M5
RELAY,FUEL PUMP---------- 4-C5
RELAY,MAIN--------------- 4-C5
RELAY,MOTOR-ANTENNA------ 4-K6
RELAY,MOTOR-HYD. UNIT-- - 2-J9
RELAY,N.O.--------------- 4-E5
4-M5
RELAY,SLIDE ROOF--------- 4-D4
RELAY,SLIDING ROOF------- 4-E4
RELAY,TRANSFER----------- 4-M5
RELAY,VALVE-HYD. UNIT---- 2-J9
REPAIR KIT--------------- 2-N8
RESISTOR,SOL.-FUEL PUMP-- 4-C5
REST(L),ARM-------------- 3-G15
3-K15
REST(R),ARM-------------- 3-F15
3-K15
REST,FOOT---------------- 2-I8
2-K8
RESTRAINT,HEAD----------- 3-L11
3-L12
RETAINER----------------- 1-G14
RETAINER(C),FORMING BAR-- 4-K4
RETAINER(L),FORMING BAR-- 4-K4
RETAINER(L),ROOF PANEL--- 4-L4
RETAINER(R),FORMING BAR-- 4-K4
RETAINER(R),ROOF PANEL--- 4-L4
RETAINER,ACCEL. ROD------ 2-C8
RETAINER,FRT.BUMPER------ 3-G3
RETAINER,LOCK CYL.------- 3-D3
RETAINER,SERVO----------- 1-I12
1-L12
RETAINER,SPRING---------- 1-I13
RETRACTOR SET(L),HEAD L.- 3-I4
RETRACTOR SET(R),HEAD L.- 3-I4
RING--------------------- 1-F14
1-L7

RING SET,'O'---------- 1-C3
1-D3
RING(L)MOUNTING---------- 3-C5
3-G4
RING(R)MOUNTING---------- 3-G4
3-N4
RING,'O'---------- 1-D7
1-E3
1-E4
1-E5
1-E7
1-E12
1-F3
1-F9
1-F13
1-G3
1-G7
1-G12
1-G14
1-H3
1-H7
1-I3
1-I9
1-I12
1-J4
1-J5
1-K12
1-L3
1-L12
1-M5
1-N12
2-K5
4-D5
4-E5
4-G3
4-N4
RING,'O'-ANTENNA--------- 4-K6
RING,'O'-FUEL PUMP------- 2-D8
RING,'O'-INNER----------- 1-F4
RING,'O'-MASTER CYL.----- 2-D9
2-N8
RING,'O'-MOUNTING ANTENNA 4-K6
RING,'O'-NO.1------------ 4-C3
RING,'O'-NO.2------------ 4-C3
RING,'O'-NO.3------------ 4-C3
RING,'O'-OIL LEVEL SENSOR 4-N4
RING,'O'-OUTER----------- 1-F4
RING,'O'-ST. GEAR-------- 2-K5
RING,'O'-TENSION BOLT---- 1-I3
1-L3
RING,'O'-VANE PUMP------- 2-L5
RING,'O'-WATER THERMO SW. 4-N4
RING,BACK UP------------- 2-E5
2-H5
RING,BACKUP-------------- 1-E3
1-G3
RING,CONTACT------------- 2-K4
RING,ILLUMINATION-------- 4-G5
RING,PUSH-DUST SEAL------ 3-F10
RING,RETAINING----------- 1-I10
1-K9
1-K10
1-N10
2-E3
2-M8
3-G4
RING,RETAINING-BALL BEARI 1-H10
1-N9
RING,SEAL---------------- 1-E13
1-E14
1-G12
3-J16
RING,SNAP---------------- 1-C7
1-D14
1-E10
1-E14
1-F7
1-G14
1-H10
1-I13
1-J10
1-J13
1-K9
1-K13

RING,SNAP---------------- 1-L13
1-N13
4-D3
4-E3
RING,SNAP-MAGNET CLUTCH-- 4-G3
RING,SQUARE-------------- 1-E3
1-G3
RING,SQUARE-OUTER-------- 1-E3
1-G3
RING,STOPPER------------- 3-C13
3-H12
RING,SYNCHRONIZER-------- 1-C10
1-G10
1-J10
1-L9
RING,THRUST WASHER------- 1-C10
1-J10
RING'A',SNAP-LOWER UNIT-- 4-F4
RING'B',SNAP-LOWER UNIT-- 4-F4
RING'C',SPROCKET-REG.---- 3-F14
RIVET-------------------- 3-C7
3-F7
3-I6
3-J4
3-L6
3-N3
RIVET,SEAL PLATE-SHROUD-- 3-I6
3-L6
ROD(R),DOOR LOCK-POWER--- 3-D14
3-J14
ROD,CLUTCH PEDAL--------- 2-H8
ROD,CONTROL-------------- 1-L10
ROD,DIAPHRAGM------------ 1-J12
ROD,MOTOR---------------- 3-J4
ROD,PARKING-------------- 1-G14
ROD,PUSH----------------- 2-H8
2-L7
ROD,SELECTOR------------- 2-G10
ROD,SHIFT(1ST&2ND)------- 1-K10
1-N10
ROD,SHIFT(3RD&4TH)------- 1-K10
1-N10
ROD,SHIFT-OVER TOP & REVE 1-K10
1-N10
ROD,TRUNK OPENING-------- 3-G6
ROD'A'------------------- 3-J4
ROD'B'------------------- 3-J4
ROTOR-------------------- 1-F7
1-G4
1-J11
ROTOR SET,OIL PUMP------- 1-E7
ROTOR,SENSOR-FRT A.B.S.-- 2-N5
ROTOR,SENSOR-RR A.B.S.--- 2-F3
RUBBER(C),CUSHION-BONNET- 3-E6
RUBBER(C),SEAL-BONNET FRT 3-E6
RUBBER(L),SEAL-SIDE PANEL 3-N10
RUBBER(R),SEAL-SIDE PANEL 3-N10
RUBBER,BLADE-FRONT------- 4-F8
RUBBER,BLADE-REAR-------- 4-I8
RUBBER,CUSHION----------- 3-G6
3-J4
4-K10
RUBBER,CUSHION-BONNET FRT 3-E6
RUBBER,CUSHION-BONNET RR- 3-E6
RUBBER,CUSHION-GARNISH--- 3-L10
RUBBER,DUST SEAL--------- 3-C9
RUBBER,ENGINE MT.-------- 2-C7
2-D7
RUBBER,HANGER------------ 2-E7
2-I7
RUBBER,INSULATION-------- 1-C5
1-G6
1-J7
1-K6
1-L4
RUBBER,INSULATOR--------- 3-K16
3-M16
RUBBER,MOUNT------------- 1-M7
2-D10
3-M4
RUBBER,MOUNT.-DIFF.CASING 2-E4
2-M3
RUBBER,MOUNT-HYD. UNIT--- 2-J9
RUBBER,MOUNTING---------- 1-G5

RUBBER,MOUNTING---------- 1-H5
2-D5
2-G5
2-G6
RUBBER,MOUNTING-DIFF.---- 2-J4
RUBBER,MOUNTING-IG.COIL-- 1-F11
RUBBER,SEAL-------------- 1-C9
1-G9
1-I9
RUBBER,SEAL-COWL PANEL--- 3-F6
RUBBER,SEAL-INTER COOLER- 1-L4
RUBBER,SEAL-RR LOWER ARM- 2-I4
RUBBER,SEALING----------- 1-I4
RUBBER,SEAT-SRG HOUSING-- 2-F3
RUBBER,STAB -FRT--------- 2-J6
RUBBER,STOP-------------- 3-E7
3-N6
RUBBER,STOPPER----------- 2-C8
2-E7
2-H8
2-I7
2-I8
2-K8
RUBBER,STOPPER-RR DAMPER- 2-F4
RUBBER,SUB FRAME--------- 2-J4
RUBBER,T/MISSION MT.----- 2-C7
2-D7

****
*   *
*   S   *
*   *
****

SCOOP,BONNET------------- 3-D6
SCREEN(L),FRONT DOOR----- 3-G14
3-L14
SCREEN(R),FRONT DOOR----- 3-G14
3-L14
SCREW-------------------- 2-G10
3-C6
3-G4
3-H16
4-G8
SCREW & WASHER,TURN KNOB- 4-I5
SCREW SET---------------- 1-J11
1-L11
3-N4
SCREW SET,ST. WHEEL------ 2-M4
SCREW SET,THROTTLE BODY-- 1-J5
1-M5
SCREW,ADJUST------------- 2-C4
2-L3
2-M9
3-G4
3-M4
SCREW,ANTENNA------------ 4-L6
SCREW,ASHTRAY------------ 3-E10
SCREW,BLEEDER------------ 2-D6
2-I3
2-L7
SCREW,CHANGE LEVER KNOB-- 2-G10
SCREW,CLUSTER SWITCH----- 4-J5
SCREW,COWL GRILLE-------- 3-C6
SCREW,DOOR MIRROR-------- 4-E11
4-N10
SCREW,DOOR SWITCH-------- 4-C6
SCREW,EARTH PLATE-ANTENNA 4-K6
SCREW,GLOVE LID---------- 3-C11
SCREW,GROMMET------------ 3-N3
3-N4
SCREW,HEAD LAMP BEZEL---- 3-I4
SCREW,HORN CAP----------- 2-K4
SCREW,ID.ADJUST-TH. BODY- 1-J5
SCREW,INTEROR MIRROR----- 4-F11
SCREW,KNUCKLE------------ 3-J11
3-K12
3-L11
3-L12
3-M12
3-N11
SCREW,LOUD SPEAKER-DOOR-- 4-M6
SCREW,PROTECTOR-SASH----- 3-M13
SCREW,RESET KNOB--------- 3-D10

SCREW,SEAL RUBBER-INT.CLR 1-L4
SCREW,ST. WHEEL BOSS----- 2-K4
SCREW,STOPPER------------ 3-H4
SCREW,STRIKER------------ 4-L4
SCREW,TAPPING------------ 3-F15
3-G13
3-H15
3-K15
3-N14
4-E9
4-L8
4-M5
SCREW,TAPPING-DOOR LOCK-- 3-C14
3-I14
SCREW,TAPPING-LOWER UNIT- 4-F4
SCREW,WINDOW REGULATOR--- 3-F14
SCREW'A',FIXING BAND----- 2-F8
SCREW'A',LOWER UNIT-S/R-- 4-F4
SCREW'B',FIXING BAND----- 2-F8
SCREW'B',LOWER UNIT-S/R-- 4-F4
SEAL--------------------- 4-D3
SEAL KIT----------------- 2-M7
SEAL KIT,CALIPER-FRT----- 2-E6
SEAL KIT,CALIPER-RR------ 2-I3
SEAL KIT,ST. GEAR-------- 2-E5
2-H5
SEAL KIT,VANE PUMP------- 2-L5
SEAL SET,OIL------------- 1-G4
SEAL(L),DUST------------- 3-E9
SEAL(L),RADIATOR--------- 1-M7
SEAL(R),RADIATOR--------- 1-M7
SEAL,'O'RING------------- 1-E14
1-I13
1-J12
1-K12
1-L12
SEAL,APEX---------------- 1-F4
SEAL,CORNER-------------- 1-F4
SEAL,CUT RING------------ 1-D12
1-G12
SEAL,DUST-BALL JOINT----- 2-E5
2-H5
SEAL,DUST-CLUSTER SWITCH- 3-F10
SEAL,LATHE CUT----------- 1-I12
1-I13
SEAL,OIL----------------- 1-C4
1-C9
1-D9
1-D12
1-F3
1-F9
1-G12
1-H3
1-H9
1-I9
1-J3
1-M3
2-C4
2-J3
2-K3
2-N3
SEAL,OIL-AXLE------------ 2-M5
SEAL,OIL-REAR AXLE------- 2-F3
SEAL,PISTON-------------- 1-D14
1-H12
2-G3
SEAL,RUBBER-------------- 1-L4
3-C6
SEAL,RUBBER-BATTERY BOX-- 1-N11
SEAL,SHAFT-COMPR.-------- 4-G3
SEAL,SIDE---------------- 1-G4
SEAL,SIDE FRAME&BATT.BRKT 3-F9
SEAL,WATER-PUMP---------- 1-K7
SEAT(L),FRONT------------ 3-J11
3-K11
3-K12
SEAT(R),FRONT------------ 3-J11
3-K12
SEAT,REGULATOR SPRING---- 1-N12
SENSOR(L),AIR BAG-------- 3-G13
SENSOR(L),FRT-A.B.S.----- 2-K9
SENSOR(L),RR-A.B.S.------ 2-K9
SENSOR(R),AIR BAG-------- 3-G13
SENSOR(R),FRT-A.B.S.----- 2-K9

SENSOR(R),RR A.B.S.------ 2-K9
SENSOR,AIR BAG----------- 3-G13
SENSOR,AIR BAG-INNER----- 3-G13
SENSOR,AIR FLOW---------- 1-F5
1-H5
SENSOR,CRANKSHAFT POSI.-- 4-N4
SENSOR,IN.AIR TEMP------- 4-C5
SENSOR,KNOCK------------- 4-D5
SENSOR,M.A.P.------------ 4-N4
SENSOR,OIL LEVEL--------- 4-N4
SENSOR,OXYGEN------------ 4-C5
SENSOR,STEERING PRESSURE- 2-K5
SENSOR,TEMP.-ENG.COOLANT- 4-C5
SENSOR,THROTTLE POSITION- 1-K5
1-N5
SENSOR,TURN CANCEL------- 4-H5
SENSOR,WATER LEVEL------- 4-N4
SEPARATOR,WARNING UNIT--- 3-C10
SHADE(L),REAR COMB. LAMP- 3-E5
SHADE(R),REAR COMB. LAMP- 3-E5
SHADE,LAMP-LICENSE------- 3-H5
SHAFT-------------------- 1-F14
1-L11
SHAFT(L),OUTPUT---------- 2-C4
SHAFT,CYLINDER----------- 4-D3
SHAFT,DIFF. PINION------- 2-L3
SHAFT,DRIVE-------------- 2-D3
SHAFT,DRIVE NO.1--------- 4-F8
SHAFT,DRIVE NO.2--------- 4-F8
SHAFT,DRIVEN GEAR-------- 1-D7
1-H7
SHAFT,ECCENTRIC---------- 1-C4
SHAFT,ENGY.ABSORBER------ 2-N4
SHAFT,INPUT-------------- 1-D12
SHAFT,INTERMED.---------- 2-N4
SHAFT,INTERMEDIATE------- 1-N13
SHAFT,MAIN--------------- 1-E10
1-K9
SHAFT,MANUAL------------- 1-G14
SHAFT,OIL PUMP----------- 1-C7
1-F7
SHAFT,OUTPUT------------- 2-C4
SHAFT,PARKING PAWL------- 1-H14
SHAFT,PINION------------- 1-K11
SHAFT,PROPELLER---------- 2-C3
SHAFT,PULLEY------------- 1-C8
SHAFT,REV. IDLE GEAR----- 1-I10
1-N9
SHAFT,V.P.V.CONTROL------ 1-H4
1-I4
SHEET,------------------- 2-E8
SHEET,BOOT--------------- 3-F11
SHEET,DAMPER-UPPER------- 2-F4
SHEET,RUBBER------------- 2-G6
SHEET,SPRING------------- 2-G6
2-H8
SHEET,SPRING-REAR DAMPER- 2-F4
SHELL,CONNECTING--------- 1-K13
SHIELD(L),SPLASH-S. FRAME 3-E9
SHIELD(R),SPLASH-S. FRAME 3-E9
SHIM,ADJUST-------------- 1-E10
1-H10
1-M9
SHIM,ADJUST-COUNTER SHAFT 1-I10
1-N9
SHIM,HINGE-DOOR---------- 3-H13
3-K13
SHIM,LOWER PANEL FRONT--- 4-F4
SHIM,LOWER PANEL REAR---- 4-G4
SHUTTING(L),SLIDING ROOF- 4-F4
SHUTTING(R),SLIDING ROOF- 4-E4
SILENCER(L),MAIN--------- 2-F7
2-G7
2-J7
SILENCER(R),MAIN--------- 2-F7
2-J7
SILENCER,FLOOR----------- -H10
4-L10
SILENCER,RELIEF---------- 1-G6
1-K6
SKIRT(L),FRONT AIR DAM--- 4-K11
SKIRT(R),FRONT AIR DAM--- 4-K11
SLEEVE,BEARING-FRONT----- 1-L11
SLEEVE,BEARING-REAR------ 1-L11

SLEEVE,CLUTCH HUB-------- 1-D10
1-F10
1-I10
1-K9
1-L9
SLEEVE,GEAR------------- 1-M9
SLEEVE,GUIDE-CONTROL HUB- 2-K9
SLEEVE,LOWER ARM--------- 2-F3
SLEEVE,MAIN-FRT CALIPER-- 2-I3
SLEEVE,REGULATOR PLUG---- 1-N12
SLEEVE,SEAL-O.D.CARRIER-- 1-M13
SLEEVE,SPEEDOMETER------- 1-F9
1-G12
1-I9
SOCKET------------------ 3-H10
SOCKET,AIR BLEED--------- 1-E5
SOCKET,BULB------------- 3-H10
SOCKET,LICENSE LAMP------ 3-H5
SOCKET,RR SIDE TURN LAMP- 3-H5
SOCKET,RR.COMB.---------- 3-E5
SOCKET,SIDE TURN--------- 3-L4
SOCKET,STOP LAMP-HI.MOUNT 3-F5
SOLENOID,LOCK UP CONTROL- 4-E5
SPACER------------------ 1-C8
1-D4
1-E6
1-F5
1-H5
1-H10
1-I9
1-K10
1-M9
1-N9
2-C4
2-D4
2-D10
2-E7
2-H8
2-I7
2-I8
2-K8
2-L3
2-M3
2-M9
3-L11
3-L12
4-C4
4-N3
SPACER,AIR CLEANER------- 1-C12
SPACER,BONNET STAY------- 3-E6
SPACER,DOWEL------------ 1-H14
SPACER,REAR DAMPER------- 2-F4
SPACER,WINDOW------------ 4-N3
SPACER'A'---------------- 4-C4
4-N3
SPACER'C'---------------- 4-C4
4-N3
SPEAKER(L),LOUD-FRONT---- 4-M6
SPEAKER(L),REAR---------- 4-M6
SPEAKER(L),W/BOX & AMP--- 3-K12
SPEAKER(R),LOUD-FRT------ 4-L6
4-M6
SPEAKER(R),LOUD-RR------- 4-M6
SPEAKER,DOOR------------- 4-M6
SPEAKER,LOUD-REAR-------- 4-M6
SPEEDOMETER-------------- 3-I10
SPINDLE,ADJUSTER--------- 2-H3
SPINDLE,SELECT LOCK------ 1-C11
1-L10
SPOILER(L),SIDE---------- 4-K11
SPOILER(R),SIDE---------- 4-K11
SPOILER,REAR------------- 4-L11
SPRING------------------- 1-C4
1-C11
1-C13
1-D11
1-D12
1-D13
1-K3
1-L10
1-M10
1-N3
2-L7
3-D11
SPRING------------------- 4-D6
4-H5
4-I5
SPRING SET,THROTTLE BODY- 1-J5
1-M5
SPRING(L),COIL-FRONT----- 2-I6
SPRING(L),LEVER---------- 2-G3
SPRING(R),COIL-FRONT----- 2-I6
SPRING(R),LEVER---------- 2-G3
SPRING,ACCUM N-R--------- 1-E13
SPRING,ACCUM 1-2--------- 1-E13
SPRING,ADJUST------------ 3-G4
SPRING,APEX SEAL--------- 1-F4
SPRING,ASHTRAY----------- 3-D10
SPRING,BACK UP----------- 1-G13
SPRING,BALANCE-SHAFT----- 2-N4
SPRING,BALL PARK--------- 1-G14
SPRING,BRUSH------------- 1-I11
1-M11
SPRING,CENTER PANEL------ 3-C10
SPRING,COIL-FRONT-------- 2-I6
SPRING,COIL-REAR--------- 2-G4
SPRING,CORNER SEAL------- 1-F4
SPRING,CUSHION-PSTN.STEM- 1-H12
SPRING,DAMPER------------ 1-J5
1-M5
SPRING,FRT.-INNER-------- 1-F4
SPRING,FRT.-OUTER-------- 1-G4
SPRING,GLOVE LID--------- 3-M10
SPRING,INTERIOR MIRROR--- 4-F11
SPRING,LIFT-------------- 2-G8
SPRING,MODIFIER---------- 1-C13
SPRING,N/D ACCUM--------- 1-E13
SPRING,O.W.VALVE--------- 1-L7
SPRING,OUTER-APEX SEAL--- 1-F4
SPRING,PARKING REVER----- 2-M9
SPRING,PAWL RETURN------- 1-H14
SPRING,PELLET------------ 1-J7
SPRING,PISTON------------ 1-E14
SPRING,PISTON RETURN----- 1-H12
1-I13
SPRING,PRESSURE---------- 1-C7
1-F7
SPRING,REAR-INNER-------- 1-G4
SPRING,REAR-OUTER-------- 1-G4
SPRING,REDUCING---------- 1-E13
SPRING,REGULATOR--------- 1-N12
SPRING,RETURN------------ 2-C8
2-H8
2-M9
SPRING,RETURN-BRAKE------ 2-I8
2-K8
SPRING,RETURN-SHAFT------ 2-N4
SPRING,SELECT------------ 1-L10
1-N10
SPRING,SHIFT ROD-REVERSE- 1-K10
SPRING,SIDE SEAL--------- 1-F4
SPRING,SYNCHRO. KEY------ 1-F10
1-L9
SPRING,SYNCHRO.KEY------- 1-C10
1-J10
SPRING,SYNCHRONIZER------ 1-G10
1-L9
SPRING,THERMO PELLET-E/S- 1-C4
SPRING,THROTTLE BACK-UP-- 1-C13
SPRING,THROTTLE RELIEF--- 1-F13
SPRING,YOKE-------------- 2-D5
2-G5
SPRING,1-2 SHIFT--------- 1-N12
SPRING,1/2 REDUCING------ 1-E13
SPRING,2-3 SHIFT--------- 1-N12
SPRING,3-2 TIMING-------- 1-G13
SPRING,3-4 SHIFT--------- 1-G13
SPRING'V',REAR BRAKE----- 2-G3
SPROCKET,REGULATOR GUIDE- 3-F14
STABILIZER,FRONT--------- 2-J6
STABILIZER,RR------------ 2-H4
STARTER------------------ 1-K11
STATOR------------------- 1-I11
STAY(L),DAMPER----------- 4-L3
STAY(L),DAMPER-TRUNK LID- 3-G6
STAY(L),FENDER-LOWER----- 3-I6
3-K6
STAY(L),FENDER-UPPER----- 3-I6
STAY(L),FENDER-UPPER----- 3-K6
STAY(L),FRONT BUMPER----- 3-F3
STAY(L),RR. BUMPER------- 3-H3
STAY(R),DAMPER----------- 4-K3
STAY(R),DAMPER-TRUNK LID- 3-G6
STAY(R),FENDER-LOWER----- 3-H6
3-J6
STAY(R),FENDER-UPPER----- 3-H6
3-J6
STAY(R),FRONT BUMPER----- 3-F3
STAY(R),RR. BUMPER------- 3-H3
STAY,BONNET-------------- 3-E6
STAY,DAMPER-------------- 4-K3
STAY,LOCK-BONNET--------- 3-E6
STAY,SET PLATE-FASCIA---- 3-H6
3-J6
STEM,PISTON-------------- 1-H12
STEM,PISTON BAND--------- 1-L12
STIFFENER(L),REAR SPOILER 4-K11
STIFFENER(R),REAR SPOILER 4-K11
STOPPER SET-------------- 1-K11
STOPPER(L),GLOVE LID----- 3-M10
STOPPER(R),GLOVE LID----- 3-M10
STOPPER,CALIPER-RR------- 2-H3
STOPPER,CONSOLE LID------ 3-E11
STOPPER,FILLER LID------- 2-G8
STOPPER,GLASS------------ 3-M13
STOPPER,LOWER ARM-------- 2-F3
STOPPER,REAR DAMPER------ 2-F4
STOPPER,WHEEL------------ 4-M10
STRAINER,INNER----------- 1-F13
STRAINER,OIL------------- 1-C7
1-D13
1-F13
1-G7
STRAP,AIR PUMP----------- 1-D6
STRAP,ALTERNATOR--------- 1-H11
STRAP'A',CARGOROOM------- 4-D11
STRAP'A',L/CPMT---------- 4-F11
STRAP'B',CARGOROOM------- 4-D11
STRAP'B',L/CPMT---------- 4-F11
STRIKER------------------ 3-F14
3-K14
3-M10
STRIKER(L),LOCK-TOP------ 4-K4
STRIKER(R),LOCK-TOP------ 4-K4
STRIKER,LID-------------- 3-G6
STRIKER,LOCK------------- 4-K3
STRIKER,STORAGE BOX------ 4-N9
STRUT,BAND--------------- 1-H12
STUD--------------------- 1-H4
1-I3
1-K4
1-L3
1-M4
2-E7
2-I7
STUD,CLUTCH HOUSING------ 1-D9
STUD,COVER--------------- 1-J3
1-M3
STUD,DIFF. CARRIER------- 2-K3
2-N3
STUD,FRONT COVER--------- 1-J3
1-M3
STUD,HEX-HYD. UNIT------- 2-J9
STUD,HOUSING------------- 1-I3
1-L3
STUD,ROTOR HOUSING------- 1-E3
1-G3
SUN VISOR(L)------------- 4-C11
4-F11
SUN VISOR(R)------------- 4-C11
4-E11
4-F11
4-N10
SUPPORT(L),MOUNTING------ 2-D6
SUPPORT(R),MOUNTING------ 2-D6
SUPPORT,CENTER----------- 1-N13
SUPPORT,DRUM------------- 1-K12
SUPPORT,FOOT------------- 4-H10
4-L10
SUPPORT,MOUNTING--------- 2-G3
SUPPORTER---------------- 1-G11
SUPPORTER,ACTUATOR------- 1-G14
SUPPORTER,CORD----------- 1-G11
4-N7
SUPPORTER,FORK----------- 1-C9
1-D9
SWITCH------------------- 1-M11
4-N4
SWITCH(L),LOCK-CYLINDER-- 3-F14
3-K14
SWITCH(R),LOCK-CYLINDER-- 3-E14
3-K14
SWITCH,ADJUSTABLE DAMPER- 4-G5
SWITCH,CLUSTER----------- 4-I5
SWITCH,CLUTCH------------ 2-H8
SWITCH,CLUTCH CUT-------- 2-J8
SWITCH,COMBINATION------- 4-H5
SWITCH,CRUISE-CLUSTER---- 4-H5
4-K5
SWITCH,DOOR-------------- 4-C6
SWITCH,FOG LAMP---------- 4-G5
SWITCH,GLOVE TRAY-------- 3-K10
4-N9
SWITCH,IGNITION---------- 3-D3
SWITCH,INHIBITOR--------- 4-D5
SWITCH,LEVEL-WASHER TANK- 4-D8
SWITCH,LIGHT-CLUSTER SW.- 4-J5
SWITCH,LIMIT-TOP MOTOR--- 4-J4
SWITCH,LOCK CYLINDER----- 4-K3
SWITCH,OIL PRESSURE------ 4-E5
SWITCH,OVER DRIVE CONTROL 2-G10
SWITCH,PARK & NEUTRAL---- 4-N4
SWITCH,PARKING LAMP------ 2-N9
SWITCH,POWER WINDOW------ 4-L5
SWITCH,RMT.MIRROR-------- 4-G5
SWITCH,SOFT TOP---------- 4-G5
SWITCH,STOP-------------- 2-J8
2-L8
SWITCH,THERMO------------ 2-E7
2-I7
SWITCH,TURN-CLUSTER SW.-- 4-H5
4-I5
SWITCH,WIPER-CLUSTER SW.- 4-J5
T/MISSION CPT.----------- 1-C12
TAB,EARTH---------------- 4-C7
TACHOMETER--------------- 3-I10
TACKER------------------- 3-E13
3-F13
TAG,CAUTION-CHANGE------- 2-G10
TANK SET,RESERVE--------- 2-C9
2-L7
2-M8
TANK,FUEL---------------- 2-D8
TANK,LIQUID-------------- 3-M16
TANK,RESERVE------------- 3-I16
TANK,SUB-RADIATOR-------- 1-M7
TANK,SURGE--------------- 1-H4
1-J4
TANK,VANE PUMP----------- 2-L5
TANK,WASHER-------------- 3-J3
4-E8
TANK,WASHER-FRONT-------- 4-D8
TANK,WASHER-REAR--------- 4-H8
TANK,WASHER-RR WIPER----- 4-I8
TAPE'A',SEAL-TOP FABRIC-- 4-I4
TAPE'B',SEAL-TOP FABRIC-- 4-I4
TERMINAL SET------------- 1-J11
TERMINAL,BACK WIND. GLASS 4-N3
THERMOSTAT--------------- 4-I3
4-J3
THERMOSTAT SET----------- 1-L7
TIRE--------------------- 2-K6
TOOL SET----------------- 4-M10
TOWER(L),LOCK-RR END PANE 3-K7
TOWER(R),LOCK-RR END PANE 3-J7
TRANSISTOR,POWER--------- 3-G16
TRAY(UP.),LOCK HOOK------ 3-E9
TRAY,ASH----------------- 3-E10
TRAY,BATTERY------------- 1-N11
TRAY,PACKAGE------------- 3-C8
TRAY,REAR PACKAGE-------- 4-H9
TRIM(C),FRT BACK--------- 3-G12
TRIM(L),'A'PILLAR-------- 4-F9
4-G9
TRIM(L),'B'PILLAR-------- 4-F9
TRIM(L),DOOR------------- 3-D15
3-E15
3-I15
TRIM(L),FRONT SIDE------- 4-H9
4-L9
TRIM(L),QUARTER---------- 4-I11
TRIM(L),SEAT BACK-------- 3-F12
3-G12
3-N12
TRIM(L),SEAT CUSHION----- 3-E12
3-N12
TRIM(L),TRUNK SIDE------- 4-M9
TRIM(L),TRUNK SIDE-LOWER- 4-I9
4-J9
TRIM(L),TRUNK SIDE-UPPER- 4-J9
TRIM(R),'A'PILLAR-------- 4-E9
4-G9
TRIM(R),'B'PILLAR-------- 4-F9
TRIM(R),DOOR------------- 3-D15
3-I15
TRIM(R),FRONT SIDE------- 4-H9
4-L9
TRIM(R),QUARTER---------- 4-I11
TRIM(R),SEAT BACK-------- 3-C12
3-M12
3-N11
TRIM(R),SEAT CUSHION----- 3-M11
3-M12
TRIM(R),TRUNK SIDE------- 4-L9
TRIM(R),TRUNK SIDE-LOWER- 4-I9
TRIM(R),TRUNK SIDE-UPPER- 4-J9
TRIM,FORMING BAR--------- 4-C9
TRIM,FRONT HEADER-------- 4-N8
TRIM,HEAD REST-FRT------- 3-C12
3-M12
TRIM,SLIDING ROOF-------- 4-E4
TRIM,TOP----------------- 4-N8
TRIM,TRUNK END----------- 4-M9
TUBE NO.1,AIR------------ 1-D7
1-G7
TUBE NO.2,AIR------------ 1-D7
1-G7
TUBE NO.3,AIR------------ 1-D7
1-G7
TUBE NO.4,AIR------------ 1-G7
1-M6
TUBE SET,VACUUM-THROTTLE- 1-K5
1-M5
TUBE,AIR INLET----------- 1-H7
TUBE,CORRUGATE----------- 4-I8
TUBE,FILLER-------------- 1-K12
TUBE,METERING OIL-------- 1-D7
1-E7
1-H7
TUBE,OIL FILTER-UPPER---- 1-K12
TUBE,REGULATOR GUIDE----- 3-F14
TUBE,VACUUM-------------- 1-I5
1-I6
1-M6
TUBE,VACUUM-SOL. VALVE--- 1-I6
1-M6
TUBE,VACUUM-TURBO CHARGER 1-M4
TUNER & DECK,COMB.------- 4-G6
TURBOCHARGER------------- 1-N4
TYRAP-------------------- 3-I16
UNIT(L),FOG LAMP--------- 3-M4
UNIT(L),SIDE TURN-RR----- 3-I5
UNIT(R),FOG LAMP--------- 3-M4
UNIT(R),SIDE TURN-RR----- 3-H5
UNIT,A.C.CONTROL--------- 4-D6
UNIT,BACK UP POWER-A.BAG- 4-M5

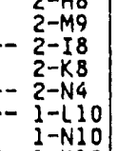

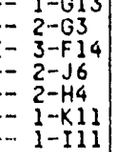

UNIT,CENTRAL CONTROL----- 4-M5
UNIT,COOLING------------ 4-I3
4-J3
UNIT,DIAGNOSIS-AIR BAG--- 4-M5
UNIT,DOOR LOCK & TIMER--- 4-N5
UNIT,DRIVE-------------- 4-E4
UNIT,HEAD LAMP---------- 3-G4
UNIT,HEAT GAUGE--------- 4-C5
UNIT,OPENER-GLASS HATCH-- 4-K3
UNIT,WARNING------------ 3-D10

V

VACUUM POWER ASSIST------ 2-C9
2-M8
VALVE------------------- 4-F3
VALVE(L),SHUTTER-------- 3-N7
VALVE(R),SHUTTER-------- 3-M7
3-N7
VALVE,AIR--------------- 2-K6
VALVE,AIR BYPASS-------- 1-I5
VALVE,AIR CONTROL------- 1-D6
VALVE,CHECK------------- 1-D6
1-H5
1-H6
1-K5
1-M6
1-N5
2-F8
3-J3
VALVE,CONTROL----------- 1-N12
VALVE,CONTROL BACK UP---- 1-G13
VALVE,DELAY------------- 1-K5
VALVE,DUAL PROPORTIONING- 2-E9
2-G9
VALVE,DUTY SOLENOID------ 1-M6
VALVE,EXPANSION---------- 4-I3
4-J3
VALVE,FUEL VAPOR.-------- 2-F8
VALVE,IDLE AIR CONTROL--- 1-I6
1-M6
VALVE,MANUAL------------ 1-N12
VALVE,MODIFIER---------- 1-C13
VALVE,NON RETURN-------- 2-E8
VALVE,ONE WAY----------- 1-G13
1-L12
VALVE,ORIFICE CHECK------ 1-C13
VALVE,PURGE------------- 1-I6
1-M6
VALVE,REDUCING---------- 1-D13
VALVE,REGULATOR--------- 1-N12
VALVE,RELIEF------------ 4-G3
VALVE,SHIFT 3-4--------- 1-G13
VALVE,SHUTTER-MANIFOLD--- 1-I4
VALVE,SOL.-AIR BLEED EXTE 1-H6
1-K6
VALVE,SOL.-AIR BLEED SURG 1-L6
VALVE,SOLENOID---------- 1-E6
VALVE,SOLENOID NO1------- 1-F13
VALVE,ST. GEAR---------- 2-E5
2-I5
VALVE,THERMO------------ 1-K5
1-N5
VALVE,THROTTLE---------- 1-C13
VALVE,THROTTLE BACK-UP--- 1-C13
VALVE,THROTTLE RELIEF---- 1-F13
VALVE,VACUUM DELAY------- 1-L5
VALVE,VARIABLE PORT------ 1-H4
VALVE,WATER------------- 3-E16
VALVE,1-2 REDUCING------- 1-D13
VALVE,1-2 SHIFT--------- 1-N12
VALVE,2-3 SHIFT--------- 1-N12
VALVE,3-4 SHIFT-COAST---- 1-G13
VALVE,3WAY-------------- 1-G6
1-K6
VESSEL(L),CHANNEL-------- 3-J15
VESSEL(R),CHANNEL-------- 3-J15

W

WALL(L),SIDE------------ 3-D11
WALL(R),SIDE------------ 3-D11
WASHER------------------ 1-D13
1-G14
1-M13
2-C7
2-D7
2-F4
2-F7
2-G7
2-H7
2-J3
2-J7
2-K3
2-K7
2-N3
3-C15
3-F15
3-I15
3-K15
3-L12
3-N16
4-E3
4-G8
4-I8
4-J8
WASHER SET-------------- 1-L11
WASHER(L),STOP-LOWER ARM- 2-J4
WASHER(R),STOP-LOWER ARM- 2-J4
WASHER,BALANCE WEIGHT---- 2-C3
WASHER,BONNET BULGE------ 3-D6
WASHER,CLAW------------- 2-M5
WASHER,CONTACT SPRING---- 4-H5
WASHER,COVER-SPARE TIRE-- 4-I10
WASHER,DISHED----------- 1-G13
1-L12
WASHER,FRONT CLUTCH------ 1-L13
1-M13
WASHER,HINGE------------ 3-L11
3-L12
WASHER,HOOK-HOOD COVER--- 4-L4
WASHER,HOOK'A'&'B'------- 4-L4
WASHER,HORN CAP---------- 2-K4
WASHER,HYD. UNIT--------- 2-J9
WASHER,LOCK------------- 2-I7
WASHER,LOCK-PUMP FILTER-- 2-D8
WASHER,LOWER UNIT-S/ROOF- 4-G4
WASHER,MOUNT RUBBER-DIFF. 2-J4
WASHER,PLAIN------------ 1-H12
1-I12
1-J12
1-K4
1-N4
2-E3
3-G16
WASHER,PLAIN-DUST COVER-- 2-N5
WASHER,PLAIN-LOWER ARM--- 2-C7
2-D7
2-E3
2-M5
WASHER,PLAIN-REAR BRAKE-- 2-E3
WASHER,ROOF MOULD-------- 3-G3
WASHER,RUBBER----------- 3-D6
3-M10
WASHER,SEAL------------- 1-J3
1-M3
WASHER,SETTING---------- 3-H13
3-K13
WASHER,SLEEVE-REAR BRAKE- 2-E3
WASHER,SPARE TIRE COVER-- 4-I10
WASHER,SPRING----------- 4-E3
4-F3
WASHER,SPRING-LOWER ARM-- 2-F3
WASHER,STOP------------- 2-J4
2-N4
WASHER,THRUST----------- 1-C10
1-E4
WASHER,THRUST----------- 1-G10
1-J10
1-M9
2-K3
WASHER,THRUST LOCK-OVER T 1-C10
1-J10
WASHER,THRUST-REVERSE IDL 1-I10
1-N9
WASHER,TOOTHED---------- 4-G8
WASHER,WAVE-CHANGE CONT.C 1-C11
1-L10
WAX,THERMO-------------- 1-K5
1-M5
WEATHERSTRIP(L)--------- 3-L13
WEATHERSTRIP(L),CAB. SIDE 3-M13
WEATHERSTRIP(L),DOOR----- 3-I13
3-M13
WEATHERSTRIP(L),INN.----- 3-H15
3-N14
WEATHERSTRIP(L),OUT.----- 3-H15
3-N14
WEATHERSTRIP(L),RAIN RAIL 3-J13
WEATHERSTRIP(R)--------- 3-L13
WEATHERSTRIP(R),CAB. SIDE 3-M13
WEATHERSTRIP(R),DOOR----- 3-I13
3-L13
WEATHERSTRIP(R),INN.----- 3-H15
3-N14
WEATHERSTRIP(R),OUT.----- 3-H15
3-N14
WEATHERSTRIP(R),RAIN RAIL 3-J13
WEATHERSTRIP,GLASS HATCH- 4-L3
WEATHERSTRIP,LID-------- 3-G6
WEATHERSTRIP,RR.WIND----- 4-C4
WEATHERSTRIP,S/ROOF------ 4-F4
WEIGHT,BALANCE---------- 1-E4
WEIGHT,COUNTER---------- 1-E4
WEIGHT,DISC WHEEL-ALUMI-- 2-K6
2-L6
2-M6
WELT(L),SEAMING--------- 3-J13
3-N13
WELT(L),SEAMING-GLS HATCH 4-M3
WELT(R),SEAMING--------- 3-J13
3-N13
WELT(R),SEAMING-GLS HATCH 4-L3
WELT,SEAMING------------ 4-D4
WELT,SEAMING-GLS HATCH LW 4-L3
WELT,SEAMING-GLS HATCH UP 4-L3
WELT,SEAMING-JACK-------- 2-M6
WELT,SEAMING-ROOF-------- 4-N8
WHEEL SET,DISC-ALUMI----- 2-M6
WHEEL,DISC-ALUMI.-------- 2-M6
WHEEL,DISC-STEEL--------- 2-K6
WHEEL,FLY--------------- 1-C4
WHEEL,SPROCKET---------- 1-C7
1-F7
WIRE,A.C.C.------------- 4-D6
WIRE,EARTH-FILLER PIPE--- 2-E8
WIRE,EARTH-HYD. UNIT----- 2-K9
WIRE,RELEASE------------ 3-L11
3-L12
WIRE,RELEASE-BONNET------ 3-E6
WIRE,REMOCON. MIRROR----- 4-E11
4-N10
WIRING,ANTILOCK BRAKE SYS 2-L9
WIRING,ENGINE----------- 4-H7
4-J7
WIRING,STORAGE---------- 4-E7
WRENCH,HUB NUT---------- 4-M10
WRENCH,WHEEL CAP-------- 4-M10
WTHSTP.,HOMING BAR-FRONT- 4-J4
WTHSTP(L),ROOF PANEL----- 4-L4
WTHSTP(R),ROOF PANEL----- 4-L4
WTHSTP,FRONT HEADER------ 4-J4

Y

YOKE-------------------- 1-K11
YOKE,DIFFERENTIAL-------- 2-L3
YOKE,SUPPORT------------ 2-D5
2-G5

MODEL IDENTIFICATION

This parts catalog has been compiled to cover the following models.

Model No.	Specifications of vehicles																																VIN (Chassis No.)
	Basic spec.	Engine	Turbo	T/mission		Speed		Body		Roof	Suspension	Diff.		Brake	Air bag	Wiper	Production period		Model year		U.S.A.						Guam & Saipan						
																						Trim level						Trim level					
	U.S.A.	RE13B	Turbo	Manual T/mission	Automatic T/mission	4 speed	5 speed	Coupe	Convertible	Sun roof	Auto adjusting suspension	Normal diff.	Limited slip diff.	Anti lock brake system	Air bag	Rear wiper	From	To	1991	1992	U.S.A. Production for	BASE	OPT1	OPT2	Turbo	Convertible	Guam & Saipan Production for	BASE	OPT1	OPT2	Turbo	Convertible	
	(US)	(13)	(TR)	(NT)	(AT)	(4S)	(5S)	(CP)	(CN)	(SR)	(AS)	(ND)	(LS)	(AL)	(AB)	(RW)						(BS)	(01)	(02)	(TR)	(CN)		(BS)	(01)	(02)	(TR)	(CN)	
FC73	US	13		MT			5S	CP				ND					Aug. '90	Jul. '91	→		Yes	BS					Yes	BS					FFC3***-900001~950000
FC74	US	13			AT	4S		CP				ND					Aug. '90	Jul. '91	→		Yes	BS					Yes	BS					FFC3***-900001~950000
FC75	US	13		MT			5S	CP		SR		ND					Aug. '90	Jul. '91	→		Yes	BS					Yes	BS					FFC3***-900001~950000
FC76	US	13			AT	4S		CP		SR		ND					Aug. '90	Jul. '91	→		Yes	BS					Yes	BS					FFC3***-900001~950000
FC77	US	13		MT			5S	CP		SR	AS	ND				RW	Aug. '90	Jul. '91	→		Yes		01	02			Yes		01	02			FFC3***-900001~950000
FC78	US	13			AT	4S		CP		SR	AS	ND				RW	Aug. '90	Jul. '91	→		Yes		01	02			Yes		01	02			FFC3***-900001~950000
FC79	US	13	TR	MT			5S	CP		SR			LS	AL		RW	Aug. '90	Jul. '91	→		Yes				TR		Yes				TR		FFC3***-900001~950000
FC80	US	13		MT			5S		CN			ND			AB		Aug. '90	Jul. '91	→		Yes					CN	Yes					CN	FFC3***-900001~950000
FC81	US	13			AT	4S			CN			ND			AB		Aug. '90	Jul. '91	→		Yes					CN	Yes					CN	FFC3***-900001~950000
FC89	US	13		MT			5S		CN			ND			AB		Jul. '91	Sep. '92		→	Yes					CN	Yes					CN	FC35*-100001~200000
FC90	US	13			AT	4S			CN			ND			AB		Jul. '91	Sep. '92		→	Yes					CN	Yes					CN	FC35*-100001~200000

MODEL IDENTIFICATION

Coupe

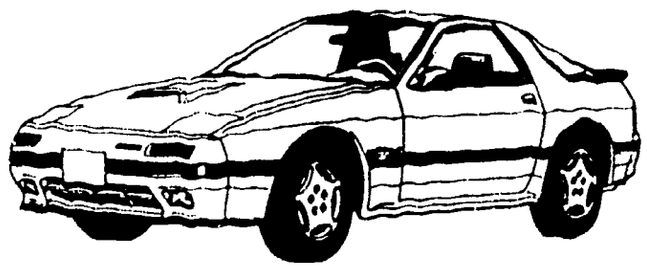

Convertible

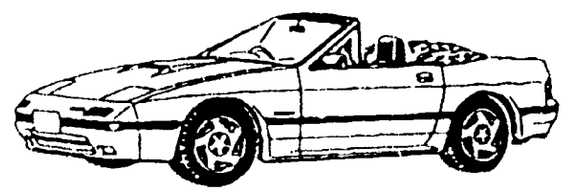

BODY PAINTS AND INTERIOR COLORS

THIS LIST SHOWS COMBINATION OF BODY PAINT AND INTERIOR COLOR. USING THIS LIST YOU WILL BE ABLE TO FIND OUT NECESSARY COLOR CODE OF PART YOU NEED IN THE TEXT.

BODY PAINT		INTERIOR COLOR CODE			
NAME	CODE				
Brilliant black	PZ	FD8		FD8	
Blaze red	SQ	FD8		FD8	
Crystal white	UC	FD8	FD9	FD8	FD9
Brave blue mica	5N	FD8	FD9		FD9
Applied model		Coupe		Convertible	

NOTE:1)
COLORS OF INTERIOR CODES ARE AS FOLLOWS.

FD8	Black
FD9	Blue

NOTE:2)
THE FOLLOWING INTERIOR COLOR CODES ARE NOT SHOWN IN THIS LIST THOUGH THESE ARE IN THE TEXT.

BECAUSE, THESE ARE NOT USED ON THE PRODUCTION LINE AT PRESENT (UP TO Dec 1993)

FE0	Red
FE1	Black/Tan

COMPLETE ASSEMBLY PARTS NUMBERS

Engine

Specifications of vehicles				Parts number
Turbo	T/mission	Body	Model year	
W/O turbo	Manual T/mission	Coupe	※	N350 – 02 – 000
		Convertible	1991	N387 – 02 – 000
			1992	N3B1 – 02 – 000
	Automatic T/mission	Coupe	※	N351 – 02 – 000
		Convertible	1991	N388 – 02 – 000
			1992	N3B2 – 02 – 000
Turbo	※	※	※	N370 – 02 – 000

T/mission

Specifications of vehicles			Parts number
T/mission	Turbo	Body	
Manual T/mission	W/O turbo	Coupe	M50P – 03 – 000
		Convertible	M50X – 03 – 000
	Turbo	※	R553 – 03 – 000
Automatic T/mission	※		BV09 – 19 – 090C

Cabin

(1/1)

Specifications of vehicles					Parts number
Body	Roof	T/mission	Suspension	Turbo	
Coupe	W/O sun roof	Manual T/mission	※	※	FC21 – 07 – 000
		Automatic T/mission			FC07 – 07 – 000
	Sun roof	Manual T/mission	W/O auto adjusting suspension	W/O turbo	FC23 – 07 – 000
				Turbo	FC18 – 07 – 000
			Auto adjusting suspension	※	FC22 – 07 – 000
		Automatic T/mission	W/O auto adjusting suspension		FC08 – 07 – 000
			Auto adjusting suspension		FC09 – 07 – 000
Convertible	※	Manual T/mission	※		FC66 – 07 – 000
		Automatic T/mission			FC67 – 07 – 000

The ※ mark in the above chart does not affect on part number selection.
Complete assemblies are available and manufactured in accordance with current production specifications only.

VEHICLE IDENTIFICATION SYSTEM FOR RX-7 SERIES (1991,1992)

VIN (= Vehicle Identification Number) for RX-7series (1991,1992 Year Model) consists of WMI(= World Manufacturer Identifier), VDS(= Vehicle Description Section) and VIS(= Vehicle Identification Section). VDS consisting of six alphanumeric characters denotes the "MODEL SERIES". VIS consisting of eight alphanumeric characters denotes the serial unit number of vehicle and is sequentially numbered within each VDS.

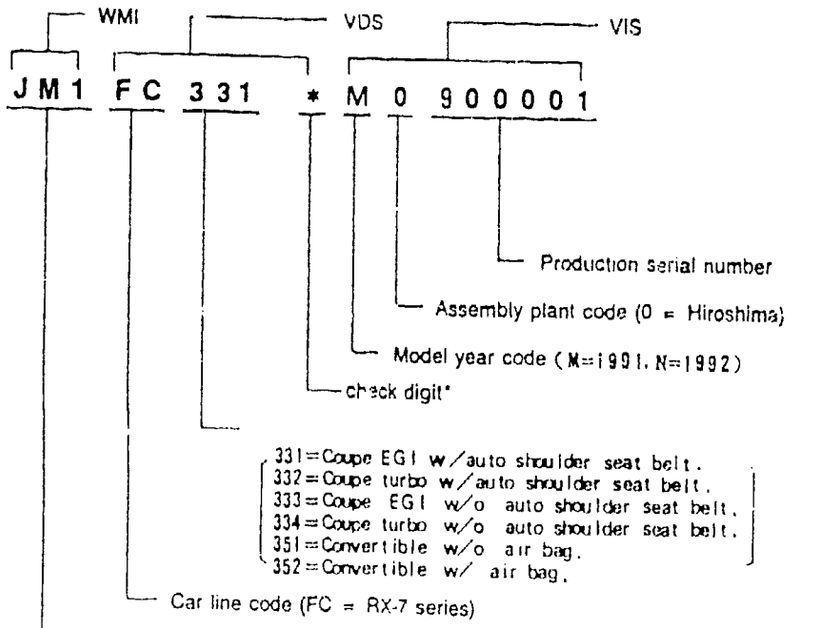

* Check digit is included as a VIN security feature to permit law enforcement verification of the authenticity of a suspected illegal VIN plate. This single digit number is determined, based upon a complex mathematical formula which is applied to each vehicle's VIN number.

** Miscellaneous Identification Code identifies major components such as engine, brake system, cab type, etc.

LOCATION OF VIN PLATE

The plate is attached to the top ledge of the dash panel under the bonnet (engine hood), refer to the illustration shown right.

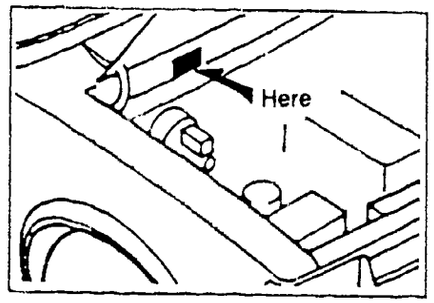

[NOTE]

If the VIN (chassis) reference number in the PCM (Parts catalog microfiche) appeared as:

FC3***-900001

..... the vehicle's VIN would be e.g. JM1FC331*M0900001.

[NOTE]

If the VIN (chassis) reference number in the PCM (Parts catalog microfiche) appeared as:

FC35* -100001

.... the vehicle's VIN would be e.g. JM1FC352*N0100001.

ABBREVIATIONS

The following abbreviations are used throughout Mazda Microfiche parts catalog : in the illustration, tox, section number index, alphabetical index.

Abbreviation	Definition
1ST	First
2ND	Second
2D	2-Door
2-SEAT	2-Seater
3D	3-Door
3RD	Third
3-SP	3-Speed
4D	4-Door
4-SP or 4-SPD	4-Speed
4/5-SP	4-Speed/5-Speed
4TH	Fourth
5D	5-Door
5-LINK	5-Link Suspension
5-SP or 5-SPD	5-Speed
10TH-ANNIV	10th-Anniversary
[A]	
A	Ampere
A.A.S. or A.A.SUSP	Automatic Adjusting Suspension
ABS	Absorber
A.B.S.	Anti-lock Brake System
A.B.S.V.	Air Bleed Solenoid Valve
A.C.	Air Conditioner
A.C.C.	Automatic Cruise Controls
ACCEL	Accelerator
ACTR	Actuator
A.C.V	Air Control Valve
ADJ.	Adjuster or Adjustable or Adjusting
ADJ.SUSP	Adjustable Suspension
AIR P.	Air Pipe
AIR CON.	Air Conditioner
ALTN	Alternator
ALUMI.	Aluminum
AMP	Amplifier
ANALOG	Analogue
ANNIV	10th Anniversary
ANT	Antenna
ARG	Argent
A.S. ABSORBER	Adjust Shock Absorber
ASH	Ashtray
ASS'Y	Assembly
AT	Automa. . Transmission
ATT	Attachment
AUS	Austria
AUST	Australia
AUTO	Automatic
[B]	
BAL	Balance
BAT	Battery
B.COLOR	Body Color
B.DOOR	Back Door
BDY	Body
BELT	Beltline
BLK	Black
BLU	Blue
BLU.GRY	Bluish Gray
BLU.M	Blue Metallic
BLVA	Bolivia
BRG	Bearing
BRKT	Bracket
BRN	Brown
BRT	Britain (Great Britain)
B.S.V	Bleed Solenoid Valve
BTHR	Breather
BUMP	Bumper
BURG.	Burglar
BY.A.C.V.	Bypass Air Control Valve
[C]	
C. or (C)	Center
CALIF	California
C/AREA	Cold Area
CAN.	Canada
CARB.	Carburetor
CAT	Catalyst
C.DISC	Compact Disc
CE	Conventional Engine (=Reciprocating Gasoline Engine)
C.G.R	Constant Gear Ratio
CH	Coach
CHG	Change
CHMBR	Chamber
CHK	Check
CLG	Cooling
CLNR	Cleaner
C/LTR	Cigarette Lighter
CLU	Clutch
..CM	Centimeter (s)
C MEMBER	Crossmember
CNTNR	Container
COMB.	Combination
COMP	Companion
COMPR	Compressor
COMPS	Compensator
CONDSR	Condenser
CONN.	Connector or Connecting
CONS.	Console
CONT.	Control
CONV.	Conventional
CONVR	Converter
COVR	Cover
CPE	Coupe
CPT	Complete Assembly
CPU	Computer
C.P.UNIT	Central Processing Unit
CRK	Crank
CRUST	Cruster
C/SHIFT	Column Shift
CTR	Center
CUSH	Cushion
CYL	Cylinder
[D]	
D ..OR	Door
D-	Diameter
DBL CAB	Double Cab (=Crew Cab)
D BLUE	Dark Blue
D BRN	Dark Brown
DE	Diesel Engine
DEF	Defroster
DEFG	Defogger
DES	Design
DEMIST	Demister
D.GRY	Dark Gray
DIAPH	Diaphragm
DIFF.	Differential
DISC/B	Disc Brake
DIST	Distributor
DMPR	Dumper
DOHC	Double Overhead Camshaft
D.P.	Dual Proportioning
DRUM/B	Drum Brake
D/TIRE or D.TIRE	Double Tire (=Dual Tire)
D.T. TOP	Detachable Top
DUMP.	Dump Truck
DX.	Deluxe
D. YLW	Dark Yellow
[E]	
ECE	Economic Commission for Europe
ECON.	Economy
E.C.P.S. SYS	Electric Control Power Steering System
EGI	Electric Gasoline Injection
E.G.R.	Exhaust Gas Recirculation
ELECT.	Electric
EM.	Emission Controls
ENEGY or ENGY	Energy
ENG.	Engine
EQLZR	Equalizer
EQUIP.	Equipment
EX.	Exhaust
EXC.	Except
EXC 10TH-ANNIV.	Except 10th Anniversary
EXT	Extension
EXTRACT.	Extractor
[F]	
F.-	Front-
F	feet (foot)
FED.	Federal
FINIS	Finisher
F.I.P.	Fuel Injection Pump
FLEX	Flexible
F.I.MIXER	Fuel Injection Mixer
FIX	Fixing
FLID	Filler Lid
F.L.DECK	Full Logic Deck
FOLD	Folding
FRA	France
FRT	Front
F/SHIFT	Floor Shift
FULL CON.	Fully Controlled
[G]	
G	Gram(s)
GARN	Garnish
GAS.	Gasoline
GASOH	Gasohol
GEN	General
G.HATCH	Glass Hatch
GLD M	Gold Metallic
GLS	Glass
GOV	Governor
GRN	Green
GRY	Gray
GRY GRN	Grayish Green
[H]	

Abbreviation	Definition
H	Head
HARN.	Harness
H.A.C.	High Altitude Conpensator
H.A.CONPENSATOR	High. Altitude Conpensator
HB	Hatchback
H.B. RE	Hatchback Release
HC-A/T	Hydro Control Automatic T/Mission
H/DUTY	Heavy Duty
HEA. or HEAT.	Heater
HI -	High -
HI.ALTI	High Altitude
H.I.C	Head Injury Criteria
HIGH T	High-Tension
HL or H.L. or H/LAMP	Head Lamp
H. KONG	Hong Kong
HNGR	Hanger
HP	Horsepower(s)
H.P.R.	High Penetration Resisted
HSG	Housing
HT. H/T or H/TOP	Hardtop
HWI	Hawaii
[I]	
ID	Inner Diameter
IG or IGN.	Ignition
IL	Island
ILLUMI.	Illumination
IN	Inlet
IND.	Indicator
INHIB.	Inhibitor
INJ	Injection
INN.	Inner
INS	Insulation
INSP	Inspection
INST	Instrument
INT	Interior
INT COOLER	Inter Cooler
INTER	Intermediate
INTMT or INTERMIT	Intermittent
I.R.S. or I.R. SUSP	Independent Rear Suspension
I.S.C	Idle Speed Control
IVRY	Ivory
[K]	
KG	Kilogram(s)
KM	Kilometer(s)
KW	Kilowatt(s)
[L]	
L or (L)	Left
L -	Length -
L	Liter(s)
LT	Liter(s) Tank
L.	Less (-Without)
LAA SUSP	Less Automatic Adjusting Suspension
LAC	Less Air Conditioner
L.BODY	Long Body
L BOX	Long Box
L.COMPT	Luggage Compartment
L.C.DISPLAY	Liquid Crystal Display
L.EGI	Less Electric Gasoline
	Injection

Abbreviation	Definition
L/EM	Less Emission Controls
L.H.D	Left Hand Drive
LH SIDE	Left Hand Side
LKOUT	Lockout
L NOSE	Long Nose
L/NVGT. CPU	Less Navigation computer
LO	Low
L.S VALVE	Load Sensing Valve
L/PARTITION	Less Partition
L.P.G	L.P Gas (=Liquefied Petroleum Gas)
L.S.D. or L.S. DIFF	Less Slip Differential
LT	Liter(s) Tank
L/TAILGATE	Less Tailgate
LVR	Lever
LWR	Lower
LRG.	Large
LX-P	LX with Performance Package
[M]	
M	Meter(s)
MA. CYL	Master Cylinder
MAINT	Maintain or Maintenance
MAP	Manifold Absolute Pressure
M.A. SUSP	Multi-Adjustable Suspension
M. EAST	Middle East
M/F	Maintenance Free
MIR	Mirror
ML	Mainland
MLD or MLDG.	Moulding
MM	Millimeter(s)
M.P	Multipoint
MPX.	Multiplex
MRN	Maroon
MT & MTG	Mounting
MT	Manual Transmission
[N]	
N-	Number of Teeth
NARR	Narrow
N.C	Normal Close
N.O	Normal Open
NO	Number
NON-SP	Non-Special Equipment
NON TILT	Non Tilting
NOR	Normal
NOZ	Nozzle
N.S.W	New South Wales (Aust.)
NVGT. CPU	Navigation Computer
N.Z	New Zealand
[O]	
O	Over
OD	Outer Diameter
O.FLTR	Oil Filter
O.H	Over Head
OHC	Overhead Camshaft
OIL CONSUMP	Oil Consumption
OP	Optional
ORD BY	Order by
O/S	Oversize
O/T	Over Tire
OUT	Outer
OV	

Abbreviation	Definition
P	Panel
(P)	Primary
PARK or PARKG	Parking
PASS	Passenger
P.B.	Proportioning Brake
P.C.V	Positive Crankcase Ventilation
PHLPPNS	Philippines
PILR	Pillar
PIV	Pivot
PKG	Package
PNEUMA.	Pneumatic
PNL	Panel
PNT	Paint
POSI	Position
POSIT	Positive
POW WINDOW	Power Window
P.P	Polypropylene (Plastics)
PRLSS	Pressure
PROTN	Protection
PROTR	Protector
PORTGL	Portugal
P.S	Power Steering
P.SOUND	Premium Sound
PSTN	Piston
PTC	Positive Temperature Coefficient
P.T.O	Power Take Off
PU	Pickup
PW or P. WINDOW	Power Window
PWRGT LIFTR	Power Gate Lifter
PWT	Powertrain
[Q]	
QTR	Quarter
QTY	Quantity
[R]	
R	Final Gear Ratio
R	Right
RAD	Radiator
RE	Rotary Engine
RECIPRO	Reciprocating Engine (=Conventional Engine)
REFRIGER	Refrigerator Van
REG or REGU	Regular
REG. GAS	Regular Gasoline
REGUL	Regulator
REL	Release
REM. CON	Remote Controlled
RET	Return
RETAIN	Retaining
RETRACT	Retractable
REV	Reverse
R.H.D	Right Hand Drive
RICO	Puerto
R.H. SIDE	Right Hand Side
REINF	Reinforcement
R. / RR	Rear
[S]	
S	Sedan
S	Sport GTS
SAFT	Safety
S. AFRICA	South Africa
SAUDI	Saudi Arabia
S.B.T	Short Bed Truck
S.BOX	Short Box

Abbreviation	Definition	Abbreviation	Definition	Abbreviation	Definition
SDN	Sedan	U. LONG	Ultra Long		
S.DUTY	Standard Duty	UND	Under		
SELECT.	Selective Use	UP	Upper		
SEN.	Sensor	URETANE	Urethane Rubber		
SERV	Service	U.S.	Undersize		
S.FORK	Shift Fork	[V]			
SG SGN & SIG.	Signal	V	Voltage		
SHIFT	Shift	V	Valve		
SHRD	Shroud	VAC	Vacuum		
SHTR	Shutter	V CHAMBER	Vacuum Chamber		
SILV M or SILVER M	Silver Metallic	Vent	Ventilation or Ventilation		
SING	Singapore	V.G.R.	Variable Gear Ratio		
SILEN	Silencer	VNL	Vinyl		
SLDG	Sliding	[W]			
SLN	Saloon	W	Watts		
SML	Small	W or WIND	Window		
S NOSE	Short Nose	W+	Watts		
SOL	Solenoid	W/	With or Use with		
SP	Speed	W/O L.S. V-LVE	W/O Load Sensing Valve		
SPEC	Specification				
SPEEDO	Speedometer	W/O OIL CONSUMP	W/O Oil Consumption		
SPG	Spring	W/O P.T.O.	W/O Power Take-Off		
SPK	Speaker (=Loudspeaker)	WARN.	Warning		
		WAS	Washer		
SPLR	Spoiler	W/AUTO BELT	With Automatic Shoulder Belt		
ST	Steering				
STAB	Stabilizer	W/CHASSIS	Windshield Chassis		
STD	Standard	WAT	Water		
S/TIRE or S TIRE	Single Tire	WGN	Wagon		
STYL	Styled	WHL	Wheel		
SUB TRNS	Sub-transmission	WHT	White		
SUN SHLD	Sun Shield	WIND	Window		
SURGT	Surge Tank	WIP	Wiper		
SUP GAS	Super Gasoline	W/O AUTO BELT	Without Automatic Shoulder Belt		
SUSP	Suspension				
S V	Solenoid Valve	WTR	Without		
SW	Switch	WOOD	Wooden		
S WASHER	Screen Washer (Windshield Washer)	W PUMP	Water Pump		
		WSHLD or WNS SHLD	Windshield		
SWD	Sweeper	WTR or WTRSTP	Weatherstrip		
SYNC	Synchronizer	W T	With Tube (Tire)		
[T]		[Y]			
T	Tire	YLW	Yellow		
T+	Thickness	YLW/GRN	Yellowish Green		
TACH & TACHOM	Tachometer	YLW/WHT	Yellowish White		
T ADJUST	Tank Adjusting	[Z]			
TACHOZ TACHOM	Tachometer	Z TEMP	Zone Temperature		
T BELT	Timing Belt				
T CEILING	Top Ceiling				
TEMP	Temperature				
T F	Transfer				
TR	Throttle				
THAN	Thinner				
THERM	Thermostat				
THROT	Throttle				
T L	Tubeless				
T MISSION	Transmission				
TRD CLMT	Tornd. Climates				
TRK	Truck				
TRQ GLIDE	Torque Glide				
T TOBAGO	Trinidad and Tobago				
TURB	Turbocharge				
TWN	Twin				
[U]					
U K	[illegible]				