Parts Catalog

Mazda RX-7
U.S.A.
('95)

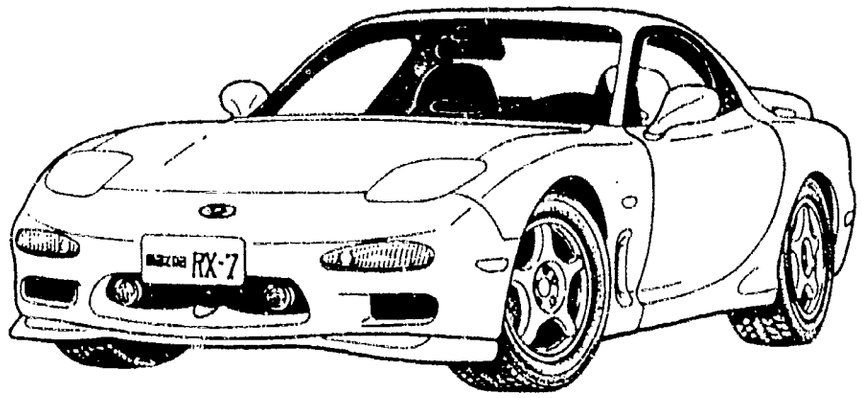

FD333 - 400001~500000

Feb.'97 (FINAL)

Catalog No. AU-FA06-04

mazda

© 1997 Mazda Motor Corporation

LAYOUT OF CONTENTS / DISPOSITION TYPOGRAPHIQUE DE CONTENU / DISPOSICION DEL CONTENIDO / ANORDNUNG DES INHALTS

- The following is a typical example of the layout of contents on Mazda microfiche parts catalog.
- Voici un exemple typique de la disposition typographique de contenu dans les microfiches de catalogue des pièces de Mazda.
- El siguiente es un ejemplo típico de la disposición del contenido en una microficha del catálogo de repuestos de Mazda.
- Folgendes ist ein typisches Beispiel der Inhaltsanordnung des Mazda-Mikrofiche-Teilekatalogs.

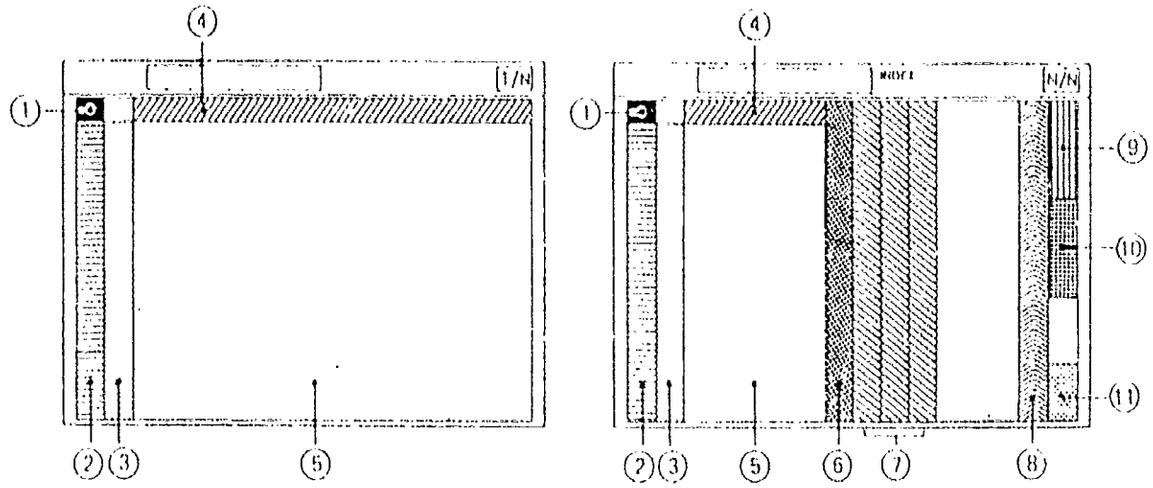

Remark : The items listed under ④ have been deleted from each fiche since Dec. '93

① • Layout of contents
• Disposition Typographique de Contenu
• Disposición del contenido
• Anordnung des Inhalts

② • Pictorial Index
• Index par Schémas
• Indice Gráfico
• Illustrierter Index

③ • Master Section No. Index
• Index des Numéros des Sections Totale
• Indice del Número de la Sección Maéstra
• Hauptabschnittsnummer-Index

~~④ • Section No. Index for the Column
• Index des Numéros des Sections pour les Colonnes
• N° de la Sección para el Indice
• Abschnittsnummer-Index für die Spalte~~

⑤ • Illustration & Text
• Illustrations et Textes
• Ilustración y Texto
• Abbildung und Text

⑥ • Part No. Index
• Index des Numéros des Pièces
• Indice del N° de Pieza
• Teile Nr.-Index

⑦ • Alphabetical Index
• Index Alphabétique
• Indice Alfabético
• Alphabetischer Index

⑧ • Model Identification
• Identification des Modèles
• Identificación del Modelo
• Modell-Kennzeichnung

⑨ • Vehicle Identification System
• Système d'Identification de Véhicule
• Sistema de Identification de Vehiculo
• Fahrzeug-Identifikations-system

PICTORIAL INDEX

ENGINE (1/2)

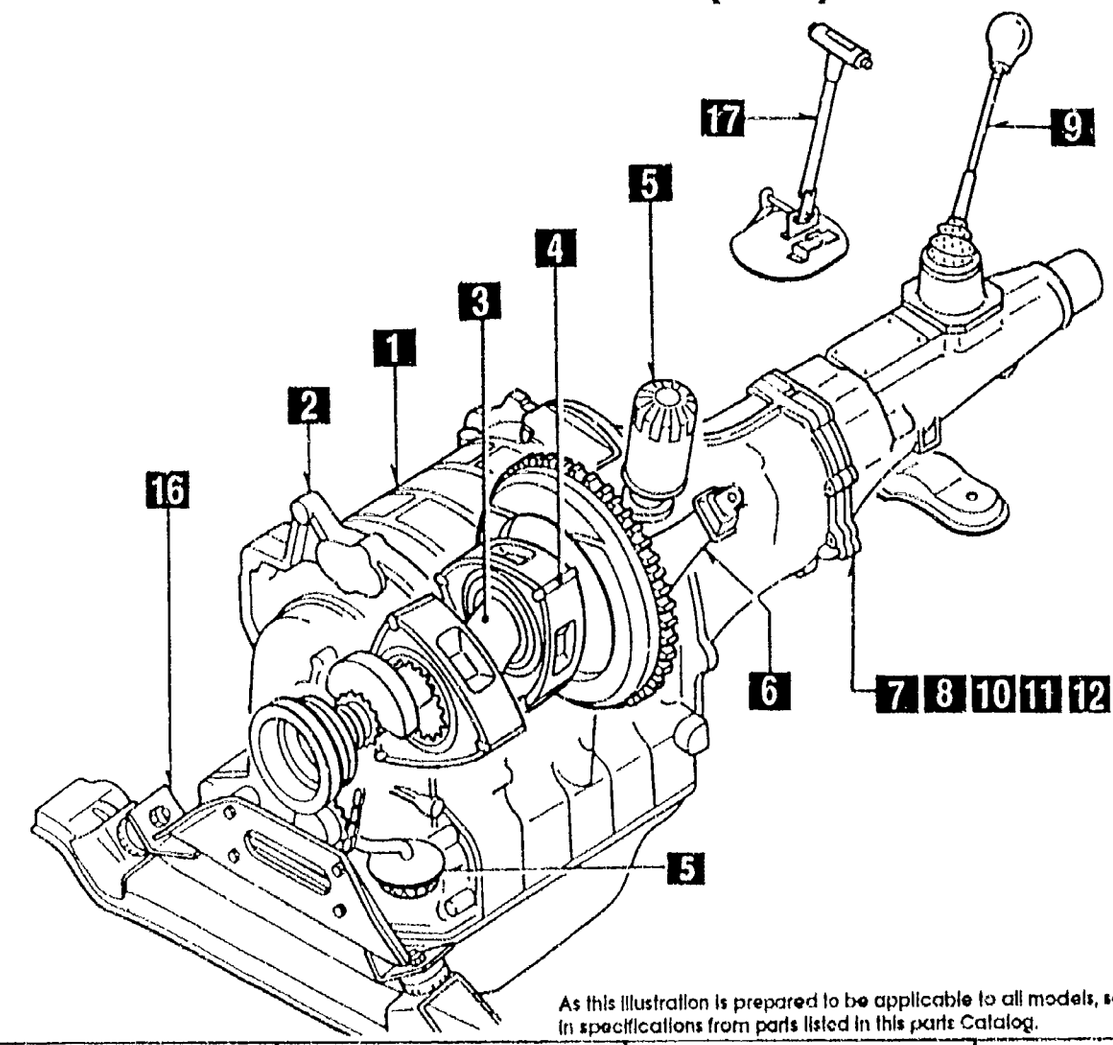

As this illustration is prepared to be applicable to all models, some parts are different in specifications from parts listed in this parts Catalog.

1000



ENGINE & GASKET SETS

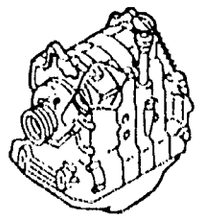

1 1030

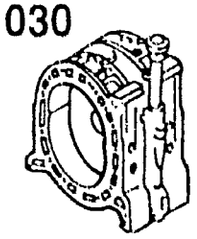

ROTOR HOUSINGS

2 1040

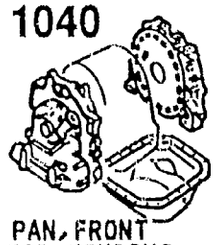

OIL PAN, FRONT & REAR HOUSING

3 1100

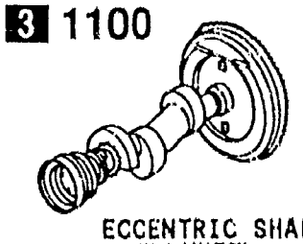

ECCENTRIC SHAFT & FLYWHEEL

4 1110



ROTORS & RELATED PARTS

5 1400

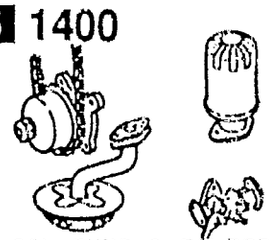

OIL PUMP & FILTER

6 1600

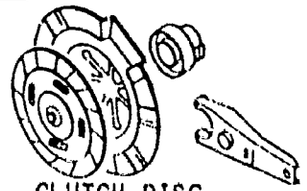

CLUTCH DISC & COVER (MANUAL)

7 1700

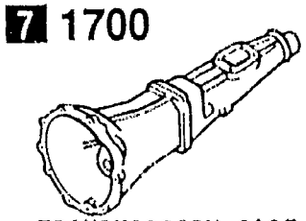

TRANSMISSION CASE (MANUAL)

8 1710

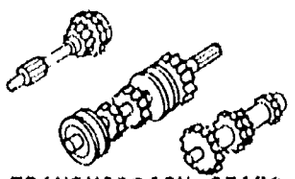

TRANSMISSION GEARS (MANUAL)

9 1720

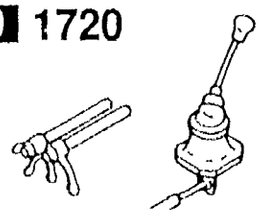

CHANGE CONTROL SYSTEM (MANUAL)

10 1910

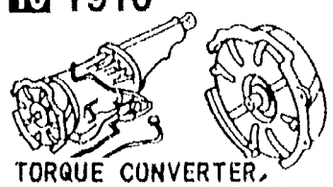

TORQUE CONVERTER, OIL PUMP & PIPINGS (AUTOMATIC)

11 1920 & 1925

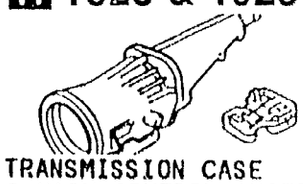

TRANSMISSION CASE & MAIN CONTROL SYSTEM (AUTOMATIC)

12 1930

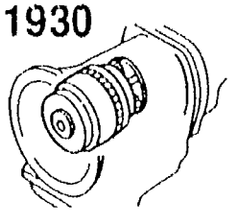

CLUTCHES & PLANETARY GEARS (AUTOMATIC)

13 1940

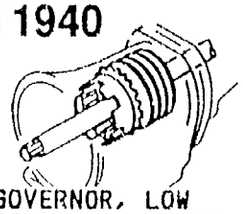

GOVERNOR, LOW & REVERSE PISTON (AUTOMATIC)

14 1950

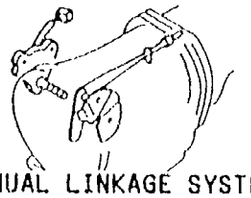

MANUAL LINKAGE SYSTEM (AUTOMATIC)

15 1960



GASKET & SEAL KIT (AUTOMATIC)

16 3900

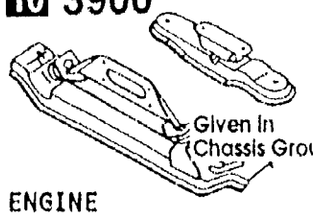

ENGINE & T/MISSION MOUNTINGS

17 4600



CHANGE CONTROL SYSTEM (AT)

PICTORIAL INDEX

1 1300

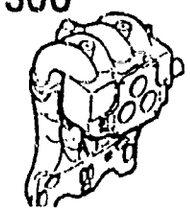

INLET MANIFOLD

2 1310

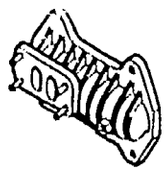

EXHAUST MANIFOLD

3 1311



INTER COOLER

4 1312

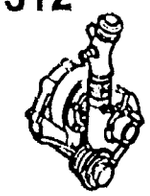

TURBO CHARGER

5 1320



FUEL SYSTEM

6 1325

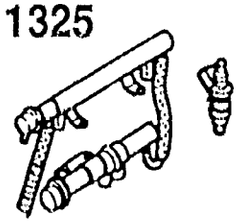

FUEL DISTRIBUTOR

ENGINE (2/2)

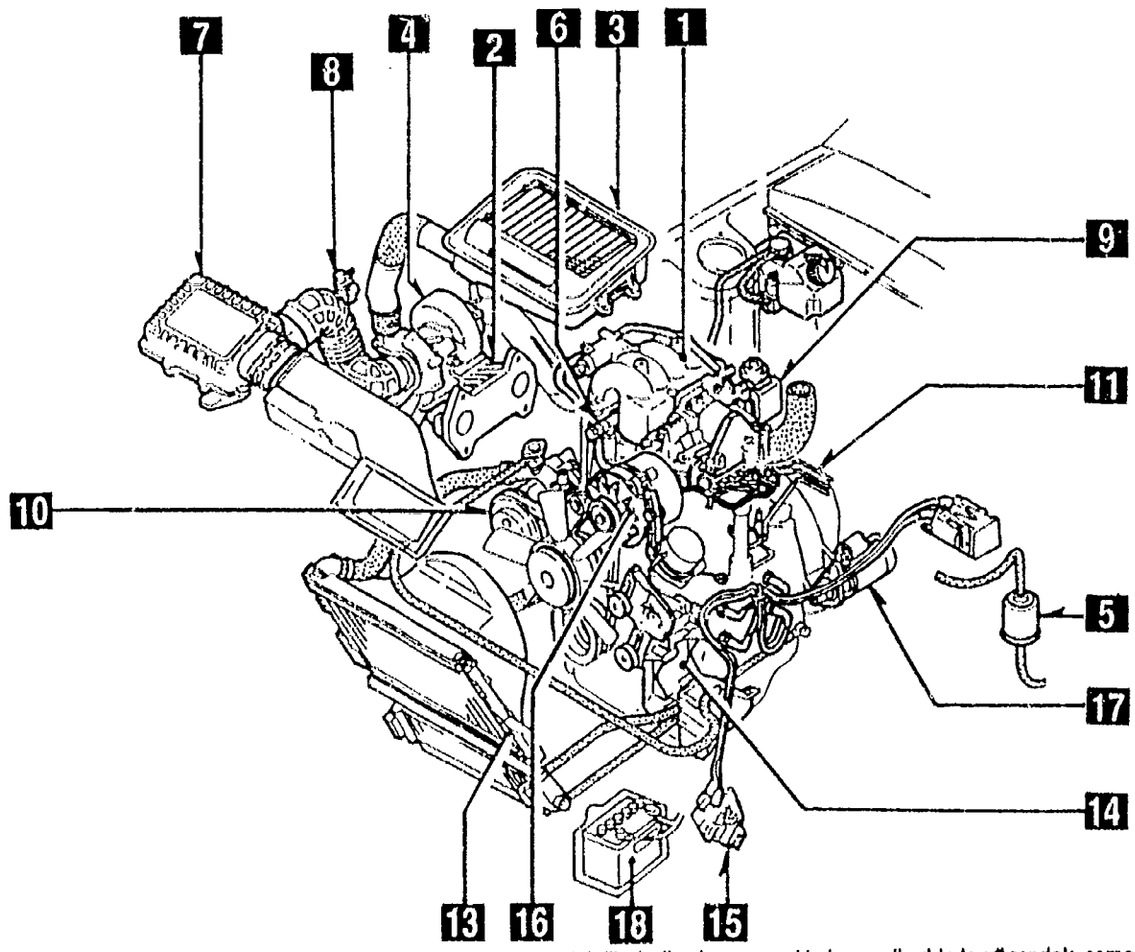

As this illustration is prepared to be applicable to all models, some parts are different in specifications from parts listed in this parts Catalog.

7 1330

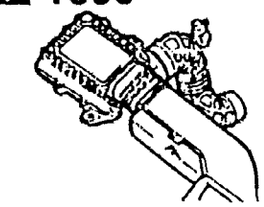

AIR CLEANER

8 1313



TWIN TURBO AIR INTAKE SYSTEM

9 1364

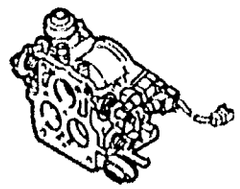

THROTTLE BODY

10 1371

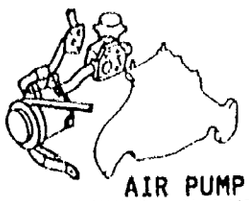

AIR PUMP & AIR CONTROL VALVE

11 1380

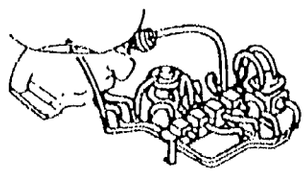

EMISSION CONTROL SYSTEM

12

13 1500

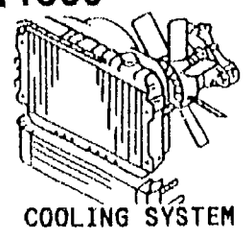

COOLING SYSTEM

14 1580

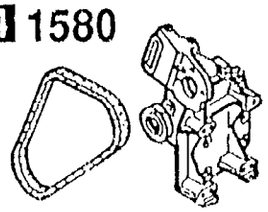

BRACKET, PULLEY & BELT

15 1800

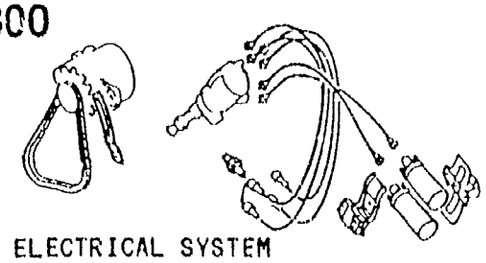

ENGINE ELECTRICAL SYSTEM

16 1830

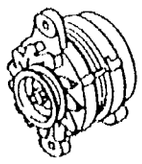

ALTERNATOR

17 1840

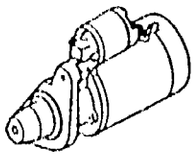

STARTER

18 1850

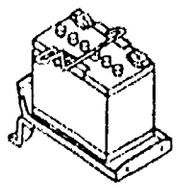

BATTERY

PICTORIAL INDEX

1 2505

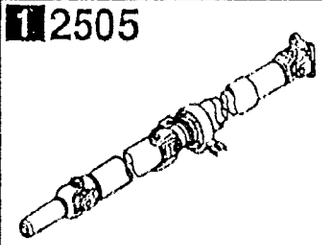

REAR PROPELLER SHAFT

2 2550

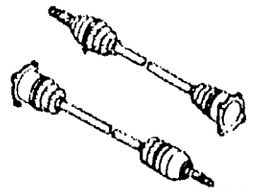

REAR DRIVE SHAFT

3 2600



REAR AXLE

4 2610



REAR BRAKE MECHANISMS

5 2710



REAR DIFFERENTIALS

6 2800

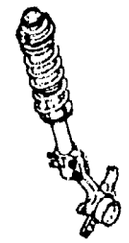

REAR SUSPENSION MECHANISMS

20 4000

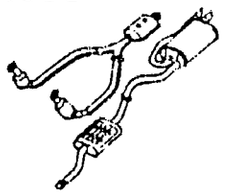

EXHAUST SYSTEM

21 4600

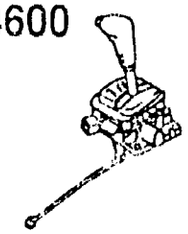

CHANGE CONTROL SYSTEM

22 1720

Given in Engine Group

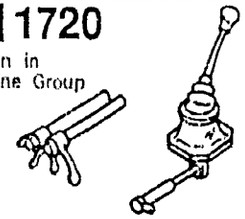

CHANGE CONTROL SYSTEM (MANUAL TRANSMISSION)

CHASSIS (1/2)

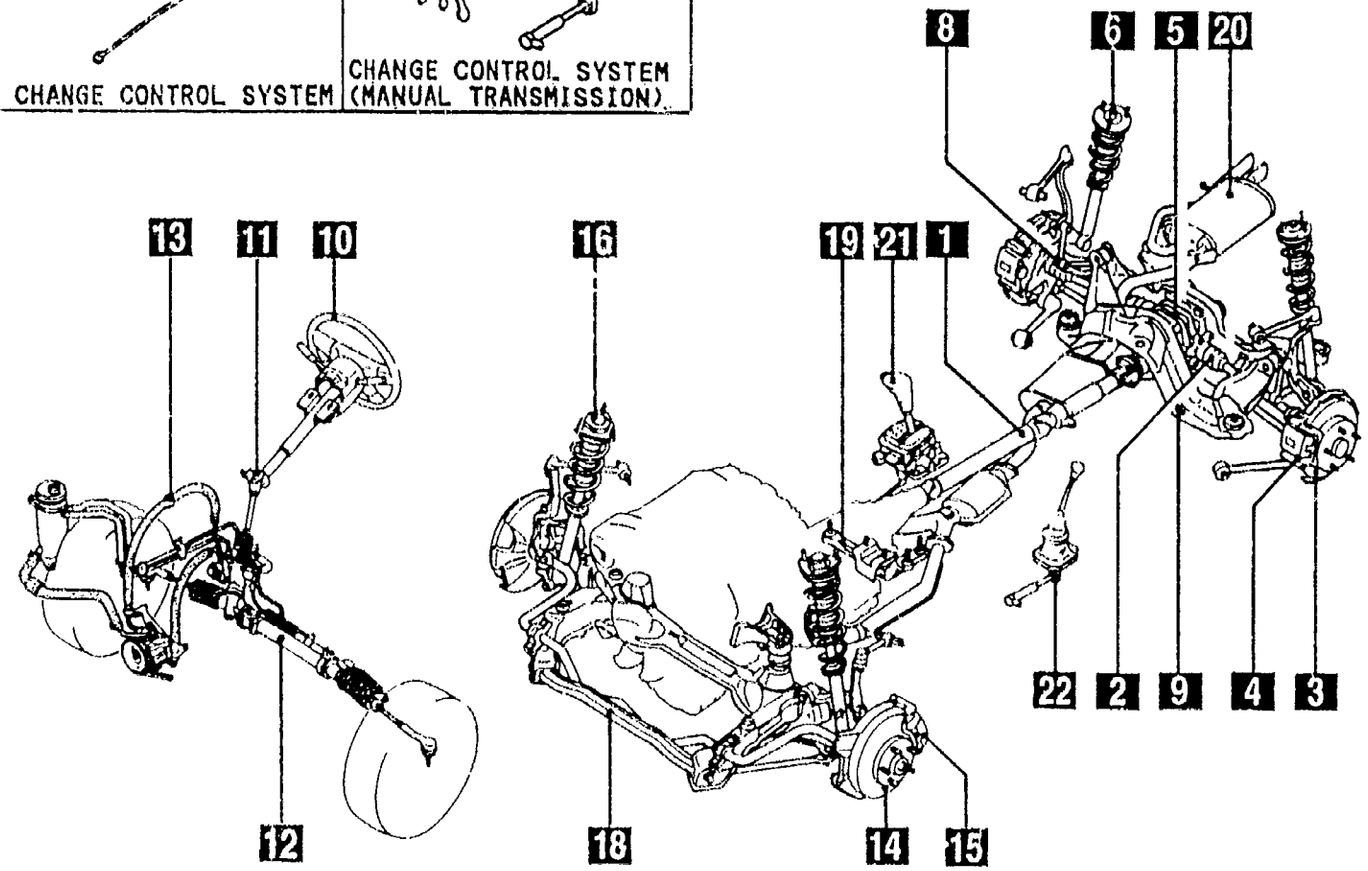

As this illustration is prepared to be applicable to all models, some parts are different in specifications from parts listed in this parts Catalog.

7

8 2810

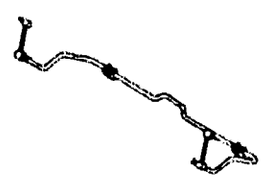

REAR STABILIZER

19 3900

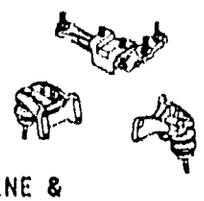

ENGINE & T/MISSION MOUNTINGS

9 2830

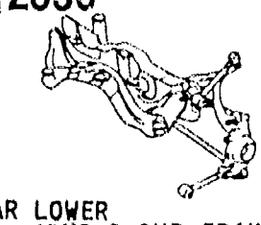

REAR LOWER ARMS & SUB FRAME

18 3410

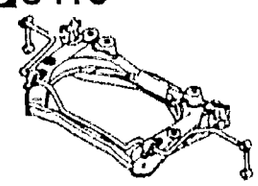

CROSSMEMBER & STABILIZER

17

10 3200



STEERING WHEEL

16 3400

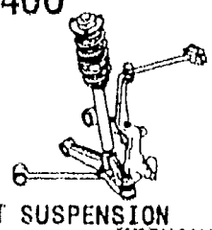

FRONT SUSPENSION MECHANISMS

15 3310



FRONT BRAKE MECHANISMS

14 3300



FRONT AXLE

13 3240

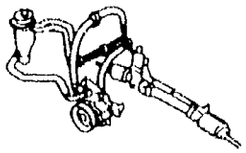

POWER STEERING SYSTEM (FRONT)

12 3220



STEERING GEAR

11 3210



STEERING COLUMN & SHAFTS

PICTORIAL INDEX

1 3700

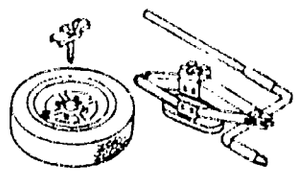

TIRES & JACK

2 4140

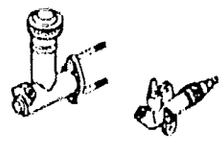

CLUTCH RELEASE & MASTER CYLINDERS

3 4145

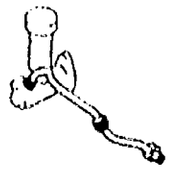

CLUTCH PIPINGS

4 4160

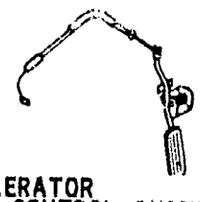

ACCELERATOR CONTROL SYSTEM

5 4200

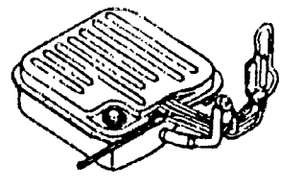

FUEL TANK

6 4210

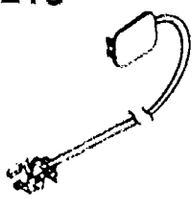

FUEL LID OPENER

CHASSIS (2/2)

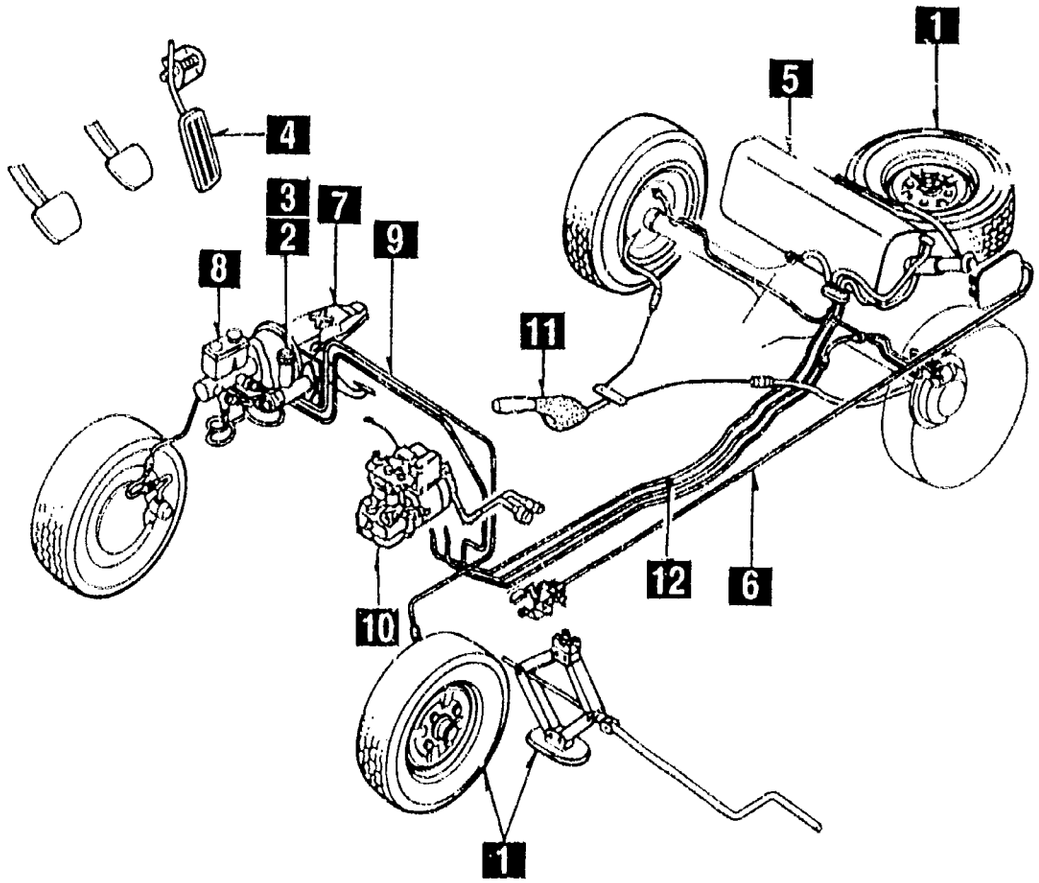

7 4300

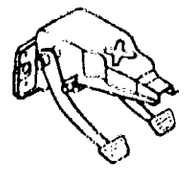

CLUTCH & BRAKE PEDALS

8 4340

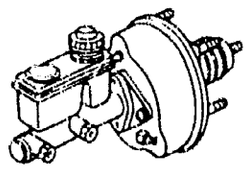

BRAKE MASTER CYLINDER & POWER BRAKE

9 4360

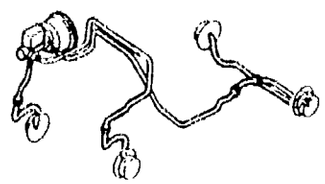

BRAKE PIPINGS

10 4370

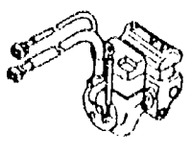

ANTILOCK BRAKE SYSTEM

As this illustration is prepared to be applicable to all models, some parts are different in specifications from parts listed in this parts Catalog.

12 4500

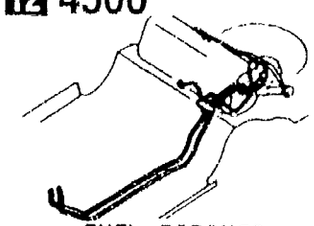

FUEL PIPINGS

11 4400

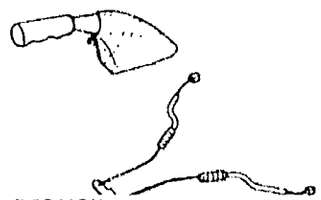

PARKING BRAKE SYSTEM

PICTORIAL INDEX

1 0900

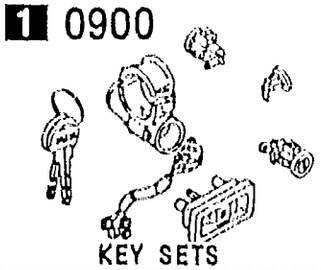

KEY SETS

2

3 5100



HEAD LAMPS

4 5103

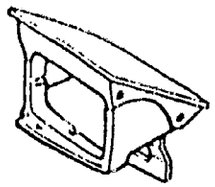

HEAD LAMP RETRACTORS

5 5105

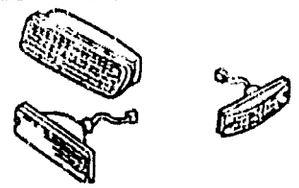

FRONT COMBINATION LAMPS

6 5110

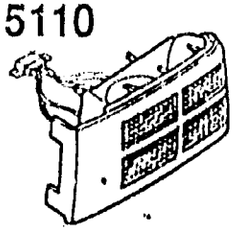

REAR COMBINATION LAMPS

19 6704

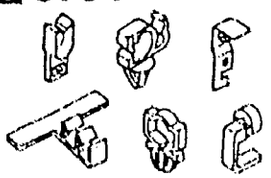

WIRING HARNESS CLAMPS

20 6720

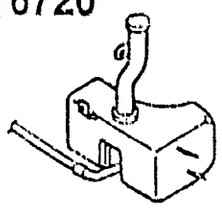

WINDSHIELD WASHER

21 6730

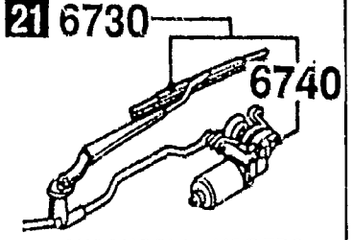

WINDSHIELD WIPERS

22 6750

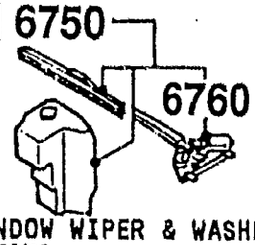

WINDOW WIPER & WASHER (REAR)

7 5120

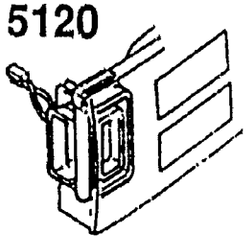

LICENSE LAMPS

18 6703

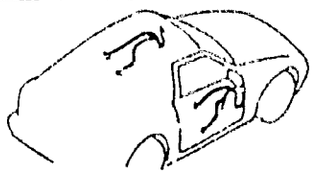

WIRING HARNESSES (DOOR, FLOOR/CEILING)

BODY (1/4)

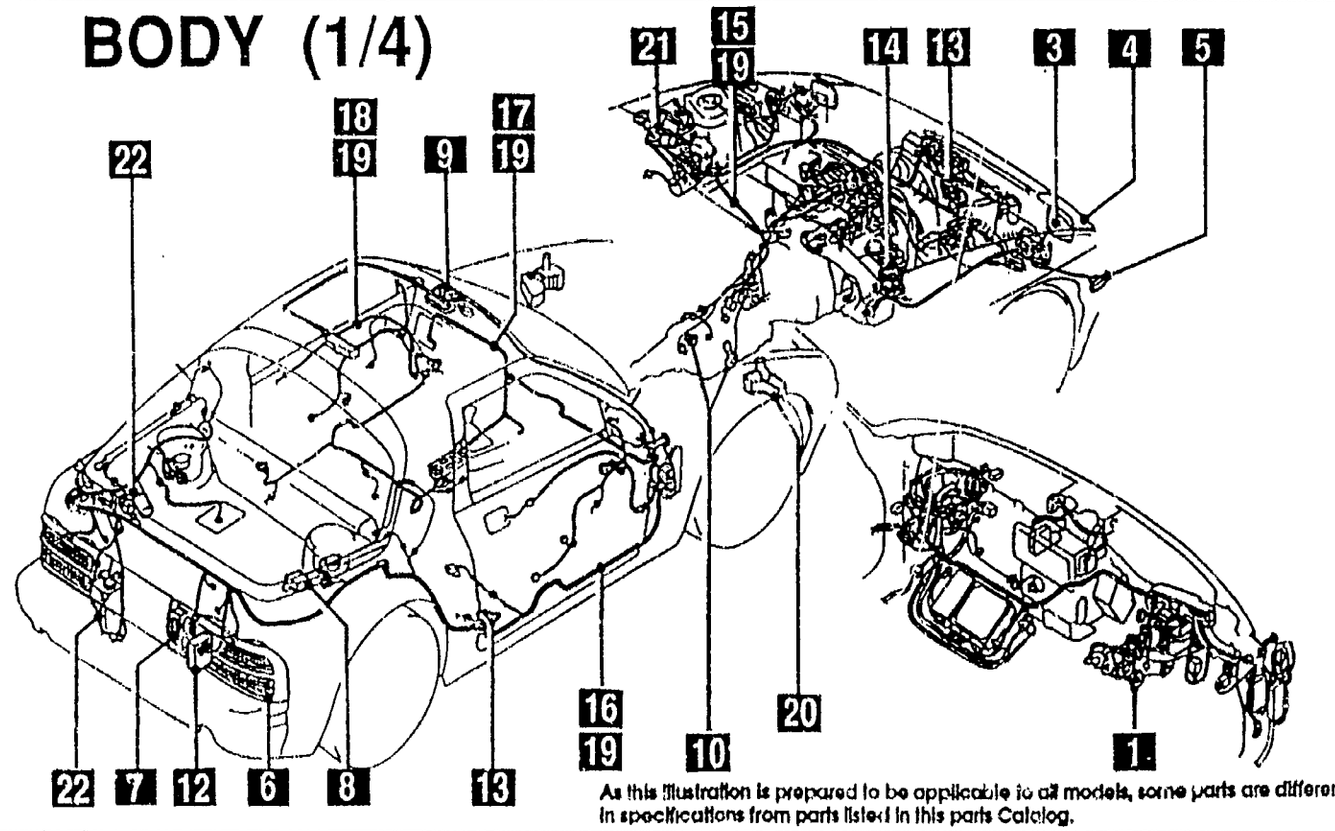

As this illustration is prepared to be applicable to all models, some parts are different in specifications from parts listed in this parts Catalog.

8 5125

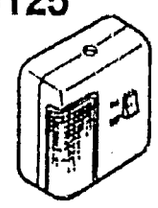

INTERIOR LAMPS

17 6702

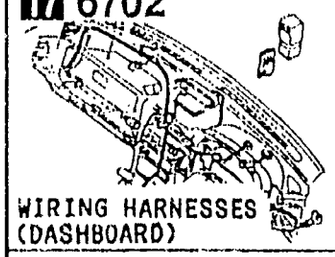

WIRING HARNESSES (DASHBOARD)

9 5130

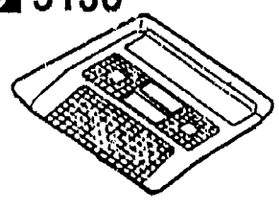

OVERHEAD CONSOLE

16 6700



WIRING HARNESSES (FRONT & REAR)

10 6600

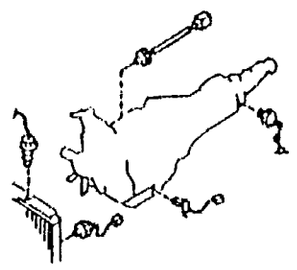

SWITCHES & RELAYS (ENGINE)

15 6701

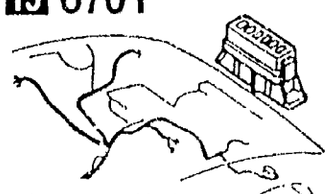

WIRING HARNESSES (ENGINE & T/MISSION)

14 6640

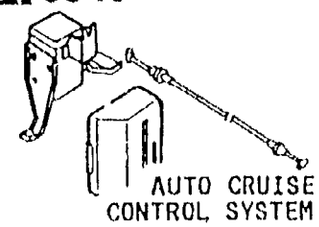

AUTO CRUISE CONTROL SYSTEM

13 6635

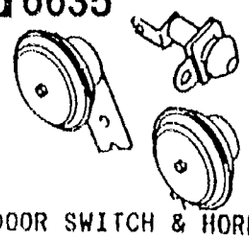

DOOR SWITCH & HORNS

12 6630

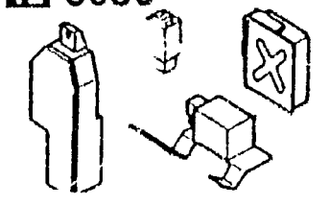

RELAYS & UNIT (BODY)

11

PICTORIAL INDEX

1 5000

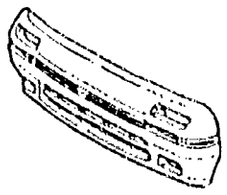

FRONT BUMPER

2 5010

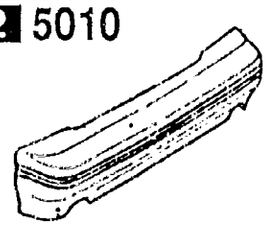

REAR BUMPER

3 5030

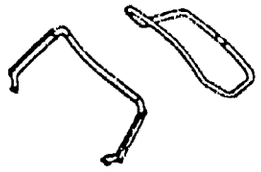

WINDOW MOULDINGS

4 5040



BODY MOULDINGS

5 5170



ORNAMENTS

6 5180

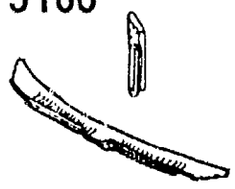

COWL
& EXTRACTOR GRILLES

20 6300

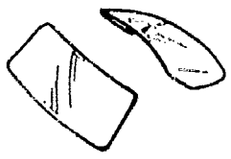

WINDOW GLASSES

21 6330

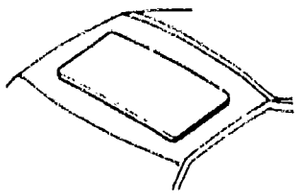

SUNROOF

22 7800

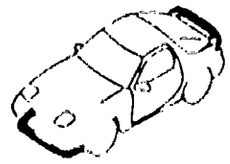

SPOILERS
& RELATED PARTS

BODY (2/4)

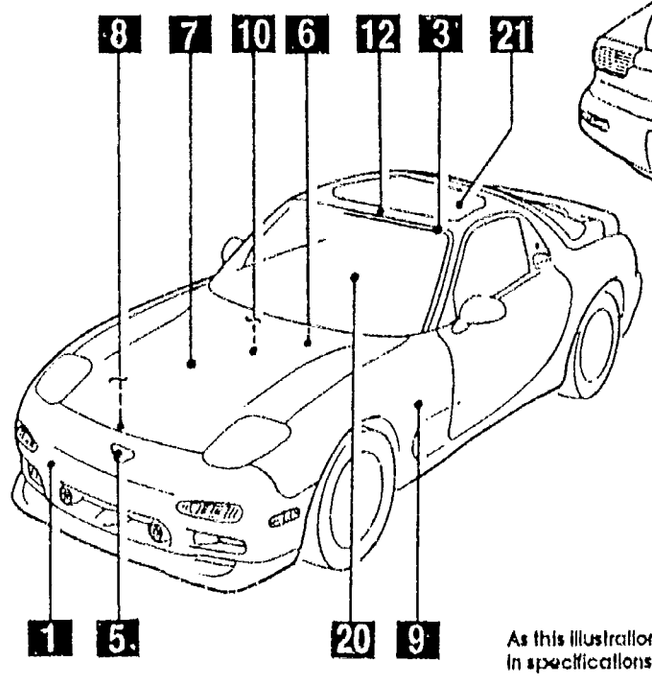

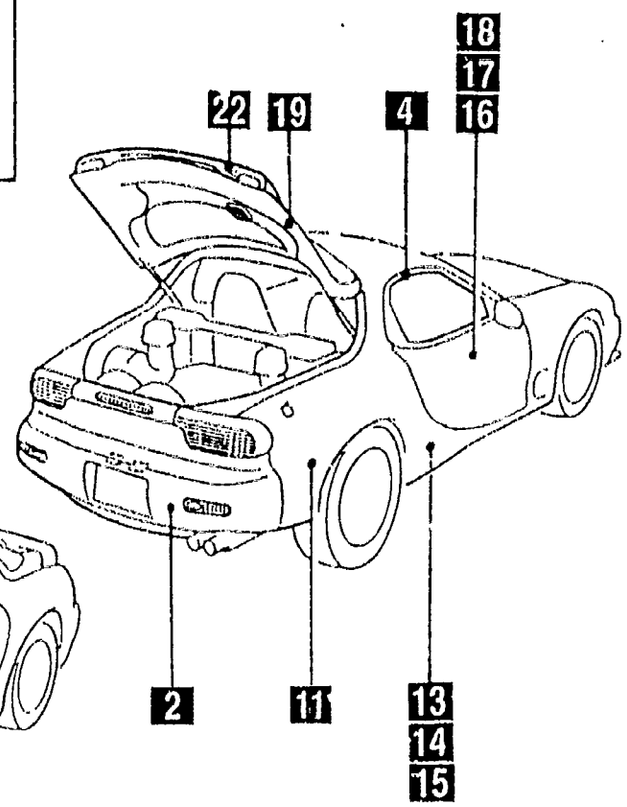

As this illustration is prepared to be applicable to all models, some parts are different in specifications from parts listed in this parts Catalog.

7 5230

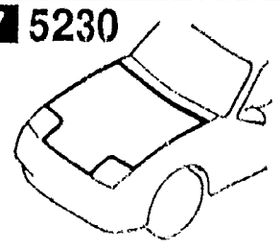

BONNET

8 5310

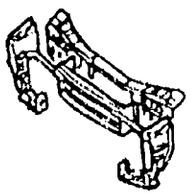

FRONT PANELS

9 5320

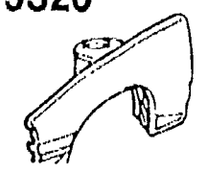

FENDER & WHEEL APRON
PANELS

10 5330



DASH & COWL PANELS

11 5340

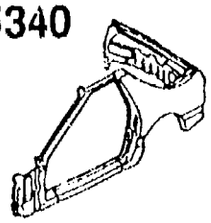

SIDE PANELS

12 5360

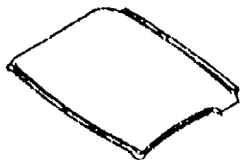

ROOF PANELS

13 5370

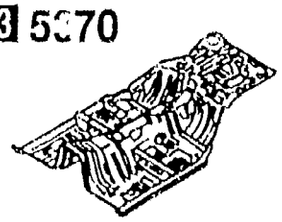

FLOOR PANELS

14 5380

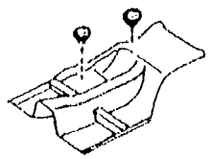

FLOOR ATTACHMENTS
(HOLE COVERS)

15 5390

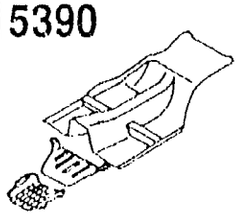

FLOOR ATTACHMENTS

16 5800

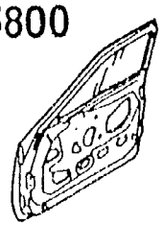

FRONT DOORS

17 5830

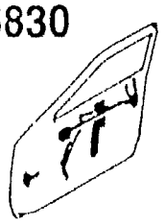

FRONT DOOR MECHANISMS

18 5840

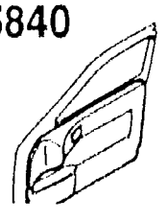

FRONT DOOR TRIMS
& RELATED PARTS

19 6230

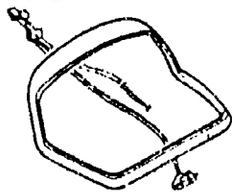

LIFT GATE MECHANISMS

PICTORIAL INDEX

1 5500

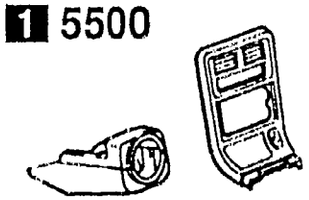

DASHBOARD EQUIPMENTS

2 5520

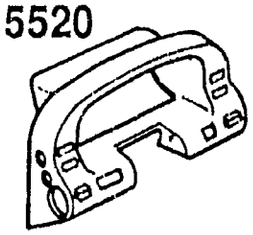

METER HOOD

3 5540

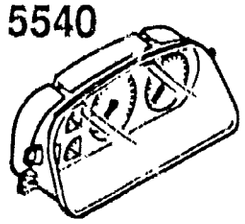

METER COMPONENTS

4 5560

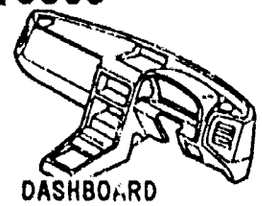

DASHBOARD & RELATED PARTS

5 5570

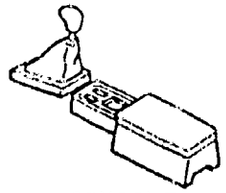

CONSOLE

6

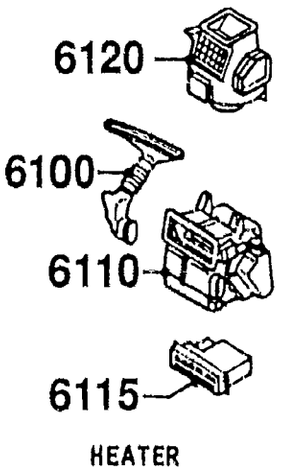

HEATER

BODY (3/4)

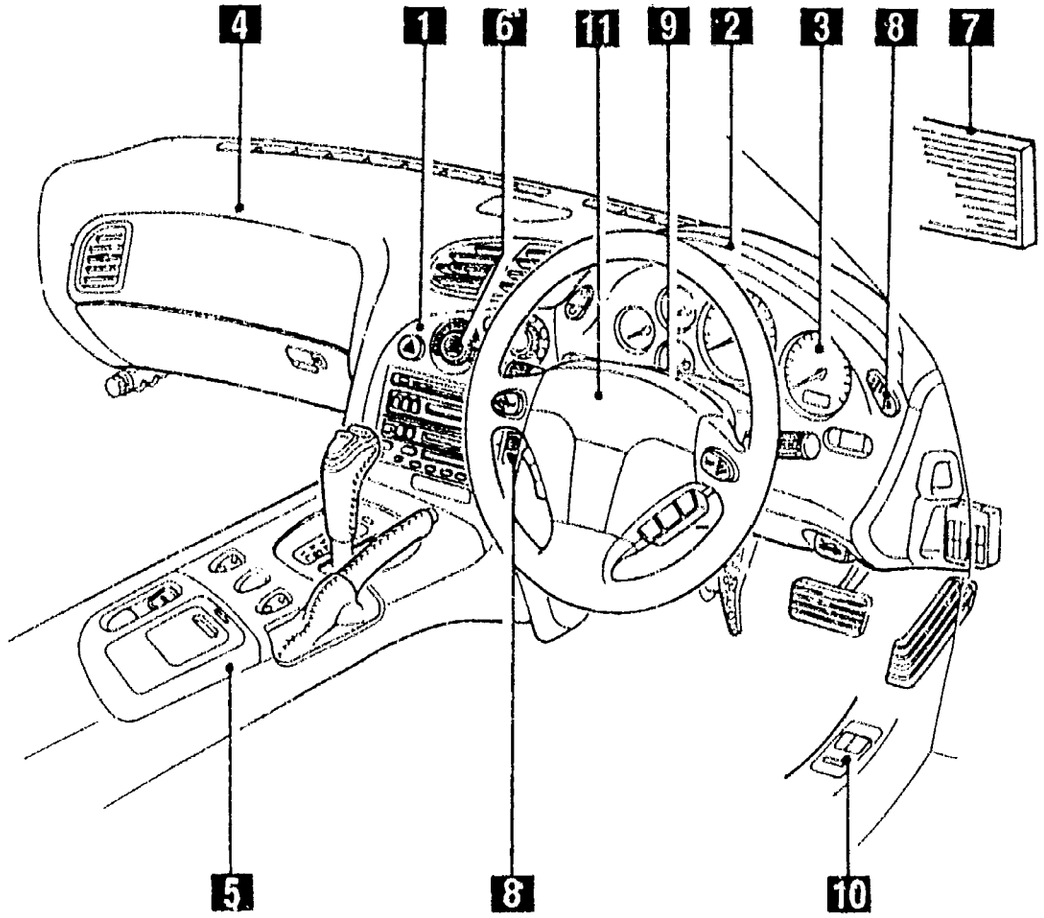

As this illustration is prepared to be applicable to all models, some parts are different in specifications from parts listed in this parts Catalog.

7

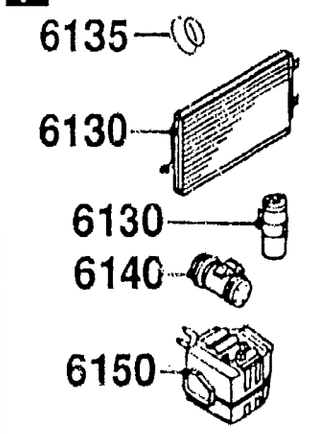

AIR CONDITIONER

8 6610

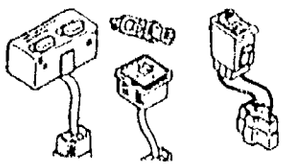

DASHBOARD SWITCHES

11 5795

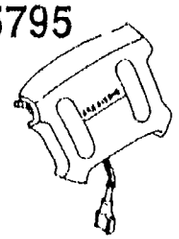

AIR BAG

10 6615

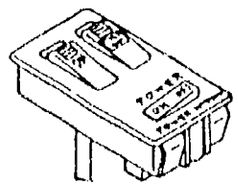

POWER WINDOW SWITCHES

9 6611

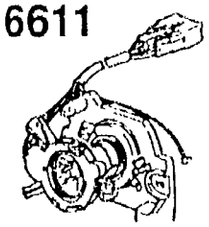

COMBINATION SWITCH

PICTORIAL INDEX

1 5580

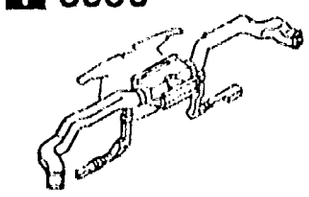

VENTILATOR

2 5700



FRONT SEATS

3

4 5790

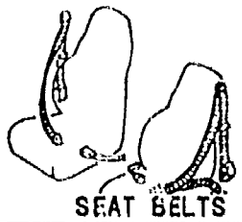

SEAT BELTS

5 6630

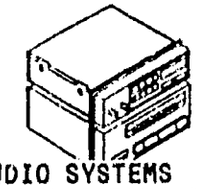

AUDIO SYSTEMS (RADIO & TAPE DECK)

6 6682

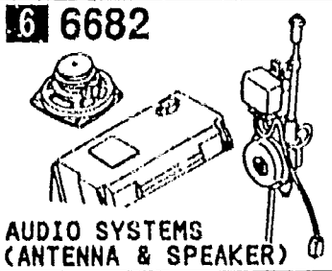

AUDIO SYSTEMS (ANTENNA & SPEAKER)

BODY (4/4)

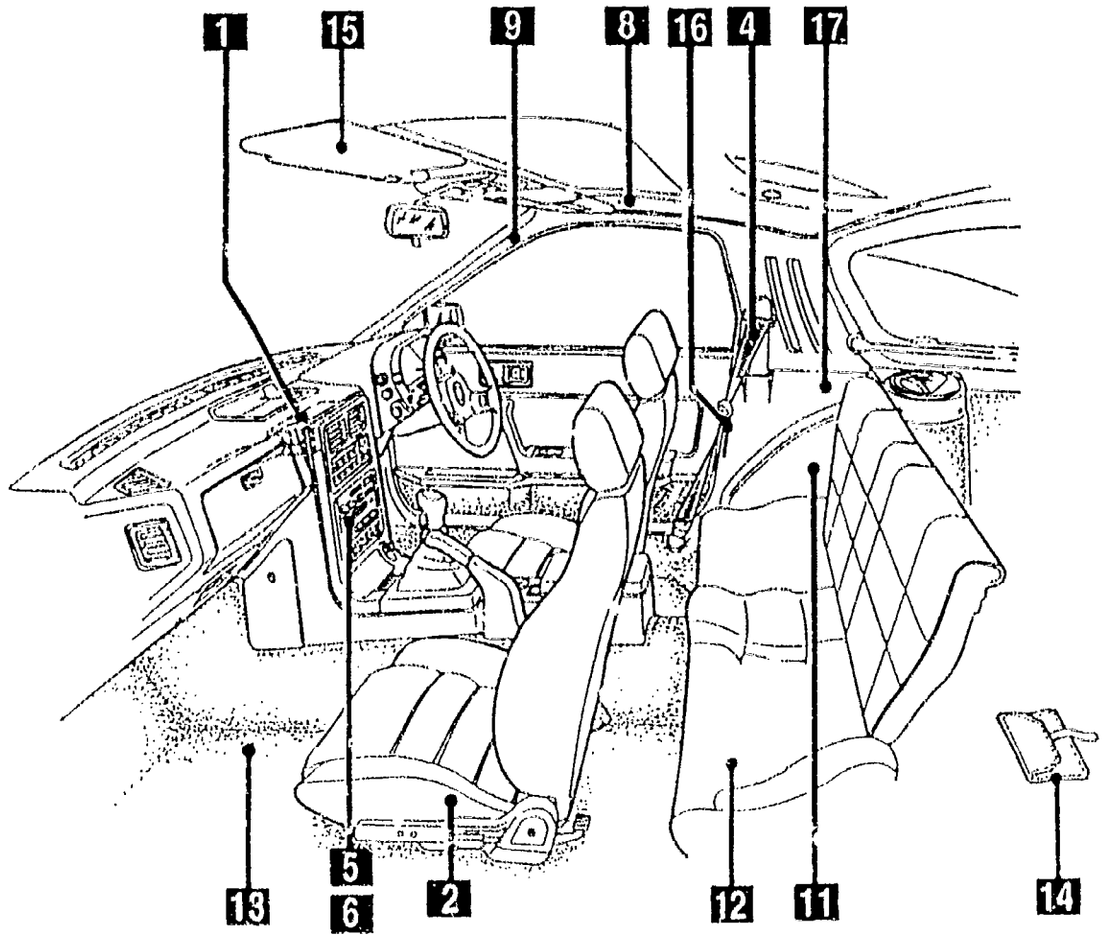

As this illustration is prepared to be applicable to all models, some parts are different in specifications from parts listed in this parts Catalog.

7

8 6800



CEILING TRIMS

9 6820



PILLAR TRIMS

10

17 7250

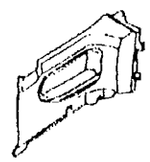

QUARTER WINDOW & TRIMS

16 6930



CAUTION PLATES & LABELS

15 6900

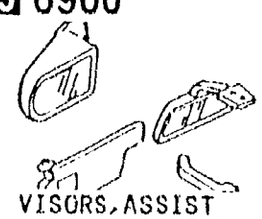

VISORS, ASSIST HANDLES & MIRRORS

14 6870

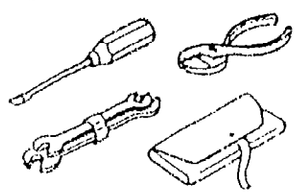

SERVICE TOOLS

13 6860

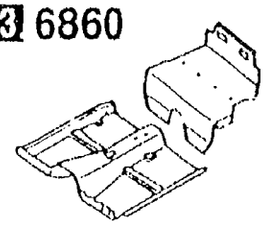

FLOOR MATS & PADS

12 6845

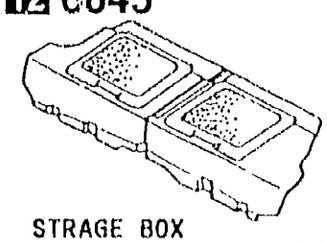

STRAGE BOX

11 6840

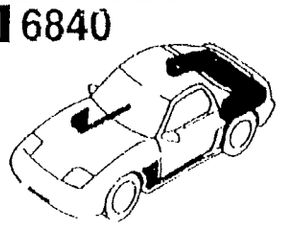

TRIMS & SCUFF PLATES

SECTION NAME INDEX (ENGINE)

LO.NO	SEC.NO	SECTION NAME
1-C03	1000	ENGINE & GASKET SETS
1-D03	1030	ROTOR HOUSING
1-G03	1040	OIL PAN, FRONT & REAR HOUSING
1-I03	1100	ECCENTRIC SHAFT & FLYWHEEL
1-L03	1110	ROTORS & RELATED PARTS
1-N03	1300	INLET MANIFOLD
1-C04	1310	EXHAUST MANIFOLD
1-D04	1311	INTER COOLER
1-E04	1312	TURBO CHARGER
1-G04	1313	TWIN TURBO AIR INTAKE SYSTEM
1-I04	1320	FUEL SYSTEM
1-K04	1325	FUEL DISTRIBUTOR
1-M04	1330	AIR CLEANER
1-D05	1364	THROTTLE BODY
1-F05	1371	AIR PUMP & AIR CONTROL VALVE
1-H05	1380	EMISSION CONTROL SYSTEM
1-D06	1400	OIL PUMP & FILTER
1-G06	1500	COOLING SYSTEM
1-N06	1580	BRACKET, PULLEY & BELT
1-C07	1600	CLUTCH DISC & COVER
1-E07	1700	MANUAL TRANSMISSION CASE
1-J07	1710	MANUAL TRANSMISSION GEARS
1-D08	1720	MANUAL TRANSMISSION CHANGE CONTROL SYSTEM
1-F08	1800	ENGINE ELECTRICAL SYSTEM
1-I08	1830	ALTERNATOR
1-K08	1840	STARTER (MT)
1-M08	1840 A	STARTER (AT)
1-C09	1850	BATTERY
1-D09	1910	AUTOMATIC TRANSMISSION TORQUE CONVERTER, OIL PUMP & PIPINGS
1-I09	1920	AUTOMATIC TRANSMISSION CASE & MAIN CONTROL SYSTEM
1-C10	1925	AUTOMATIC TRANSMISSION CONTROL VALVE
1-K10	1930	AUTOMATIC TRANSMISSION CLUTCHES & PLANETARY GEARS
1-H11	1940	AUTOMATIC TRANSMISSION GOVERNOR, LOW & REVERSE PISTON
1-K11	1950	AUTOMATIC TRANSMISSION MANUAL LINKAGE SYSTEM
1-M11	1960	AUTOMATIC TRANSMISSION GASKET & SEAL KIT

CATLOG NO= AUFA06-04

DATE. 1997-01

SECTION NAME INDEX (CHASSIS)

LO.NO	SEC.NO	SECTION NAME	LO.NO	SEC.NO	SECTION NAME	LO.NO	SEC.NO	SECTION NAME
2-C03	2505	REAR PROPELLER SHAFT						
2-D03	2550	REAR DRIVE SHAFT						
2-E03	2600	REAR AXLE						
2-G03	2610	REAR BRAKE MECHANISMS						
2-J03	2710	REAR DIFFERENTIALS						
2-N03	2800	REAR SUSPENSION MECHANISMS						
2-C04	2810	REAR STABILIZER						
2-D04	2830	REAR LOWER ARMS & SUB FRAME						
2-G04	3200	STEERING WHEEL						
2-H04	3210	STEERING COLUMN & SHAFTS						
2-I04	3220	STEERING GEAR						
2-K04	3240	POWER STEERING SYSTEM						
2-M04	3300	FRONT AXLE						
2-N04	3310	FRONT BRAKE MECHANISMS						
2-C05	3400	FRONT SUSPENSION MECHANISMS						
2-F05	3410	CROSSMEMBER & STABILIZER						
2-G05	3700	TIRES & JACK						
2-C06	3900	ENGINE & T/MISSION MOUNTINGS						
2-D06	4000	EXHAUST SYSTEM						
2-G06	4140	CLUTCH RELEASE & MASTER CYLINDERS (MANUAL TRANSMISSION)						
2-I06	4145	CLUTCH PIPINGS (MANUAL TRANSMISSION)						
2-J06	4160	ACCELERATOR CONTROL SYSTEM						
2-K06	4200	FUEL TANK						
2-C07	4210	FUEL LID OPENER						
2-D07	4300	CLUTCH & BRAKE PEDALS (MANUAL TRANSMISSION)						
2-F07	4300A	BRAKE PEDALS (AUTOMATIC TRANSMISSION)						
2-G07	4340	BRAKE MASTER CYLINDER & POWER BRAKE						
2-I07	4360	BRAKE PIPINGS						
2-L07	4370	ANTILOCK BRAKE SYSTEM						
2-N07	4400	PARKING BRAKE SYSTEM						
2-C08	4500	FUEL PIPINGS						
2-F08	4600	CHANGE CONTROL SYSTEM (AT)						

SECTION NAME INDEX (BODY)

LO.NO	SEC.NO	SECTION NAME
2-C10	0900	KEY SETS
2-E10	5000	FRONT BUMPER
2-H10	5010	REAR BUMPER
2-J10	5030	WINDOW MOULDINGS
2-K10	5040	BODY MOULDINGS
2-L10	5100	HEAD LAMPS
2-N10	5103	HEAD LAMP RETRACTORS
2-D11	5105	FRONT COMBINATION LAMPS
2-I11	5110	REAR COMBINATION LAMPS
2-N11	5120	LICENSE LAMPS
2-C12	5125	INTERIOR LAMPS
2-D12	5130	OVERHEAD CONSOLE
2-E12	5170	ORNAMENTS
2-F12	5180	COWL & EXTRACTOR GRILLES
2-H12	5230	BONNET
2-J12	5310	FRONT PANELS
2-K12	5320	FENDER & WHEEL APRON PANELS
2-N12	5330	DASH & COWL PANELS
2-C13	5340	SIDE PANELS
2-G13	5360	ROOF PANELS
2-H13	5370	FLOOR PANELS
2-J13	5380	FLOOR ATTACHMENTS (HOLE COVERS)
2-L13	5390	FLOOR ATTACHMENTS
2-C14	5500	DASHBOARD EQUIPMENTS
2-D14	5520	METER HOOD
2-E14	5540	METER COMPONENTS
2-G14	5560	DASHBOARD & RELATED PARTS
2-K14	5570	CONSOLE
2-N14	5580	VENTILATOR
2-C15	5700	FRONT SEATS
2-D16	5790	SEAT BELTS
2-E16	5795	AIR BAG
2-F16	5800	FRONT DOORS
2-I16	5830	FRONT DOOR MECHANISMS
2-L16	5840	FRONT DOOR TRIMS & RELATED PARTS
3-C03	6100	HEATER
3-D03	6110	HEATER UNIT COMPONENTS
3-E03	6115	HEATER CONTROLS COMPONENTS
3-F03	6120	HEATER BLOWER COMPONENTS
3-G03	6130	AIR CONDITIONER (DENSO MAKE)
3-J03	6130A	AIR CONDITIONER (MANA MAKE)
3-M03	6135	AIR CONDITIONING COOLING PIPE 'O' RING
3-C04	6140	AIR CONDITIONING COMPRESSOR COMPONENTS (DENSO MAKE)
3-E04	6140A	AIR CONDITIONING COMPRESSOR COMPONENTS (MANA MAKE)
3-G04	6150	AIR CONDITIONING COOLING UNIT (DENSO MAKE)
3-H04	6150A	AIR CONDITIONING COOLING UNIT (MANA MAKE)
3-J04	6230	LIFT GATE MECHANISMS
3-M04	6300	WINDOW GLASSES
3-N04	6330	SUNROOF
3-G05	6600	ENGINE SWITCHES & RELAYS
3-L05	6610	DASHBOARD SWITCHES
3-M05	6611	COMBINATION SWITCH
3-N05	6615	POWER WINDOW SWITCHES
3-C06	6630	BODY RELAYS & UNIT
3-E06	6635	DOOR SWITCH & HORNS
3-F06	6640	AUTO CRUISE CONTROL SYSTEM
3-G06	6680	AUDIO SYSTEMS (RADIO & TAPE DECK)
3-J06	6682	AUDIO SYSTEMS (ANTENNA & SPEAKER)
3-N06	6700	FRONT & REAR WIRING HARNESSES
3-F07	6701	ENGINE & TRANSMISSION WIRING HARNESSES
3-H07	6702	DASHBOARD WIRING HARNESSES
3-J07	6703	DOOR, FLOOR & CEILING WIRING HARNESSES
3-K07	6704	WIRING HARNESS CLAMPS
3-L07	6720	WINDSHIELD WASHER
3-N07	6730	WINDSHIELD WIPERS
3-D08	6740	WIPER MOTOR COMPONENTS (FRONT)
3-E08	6750	WINDOW WIPER & WASHER (REAR)
3-H08	6760	WINDOW WIPER MOTOR COMPONENTS (REAR)
3-I08	6800	CEILING TRIMS
3-J08	6820	PILLAR TRIMS
3-K08	6840	TRIMS & SCUFF PLATES
3-N08	6845	STRAGE BOX
3-C09	6860	FLOOR MATS & PADS
3-F09	6870	SERVICE TOOLS
3-G09	6900	SUNVISORS, ASSIST HANDLES & MIRRORS
3-J09	6930	CAUTION PLATES & LABELS
3-L09	7250	QUARTER WINDOW & TRIMS
3-N09	7800	SPOILERS & RELATED PARTS

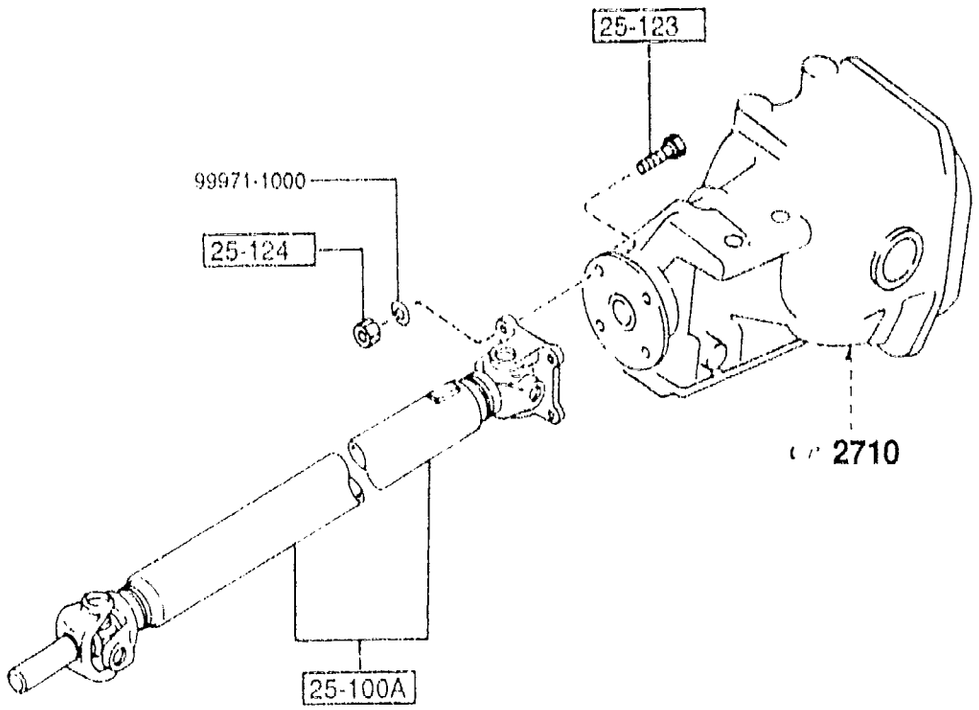

FWD

2505 -1 * REAR PROPELLER SHAFT

PART NO.	QTY	MODEL/RESTRICTION	MODEL/RESTRICTION	MODEL/RESTRICTION	FROM-TO
25-100A		SHAFT,PROPELLER			
PF03-25-100	1	(MT)			
PF04-25-100	1	(AT)			
25-123		BOLT			
P011-25-123	4				
25-124		NUT			
1368-25-124	4				

2550 REAR DRIVE SHAFT

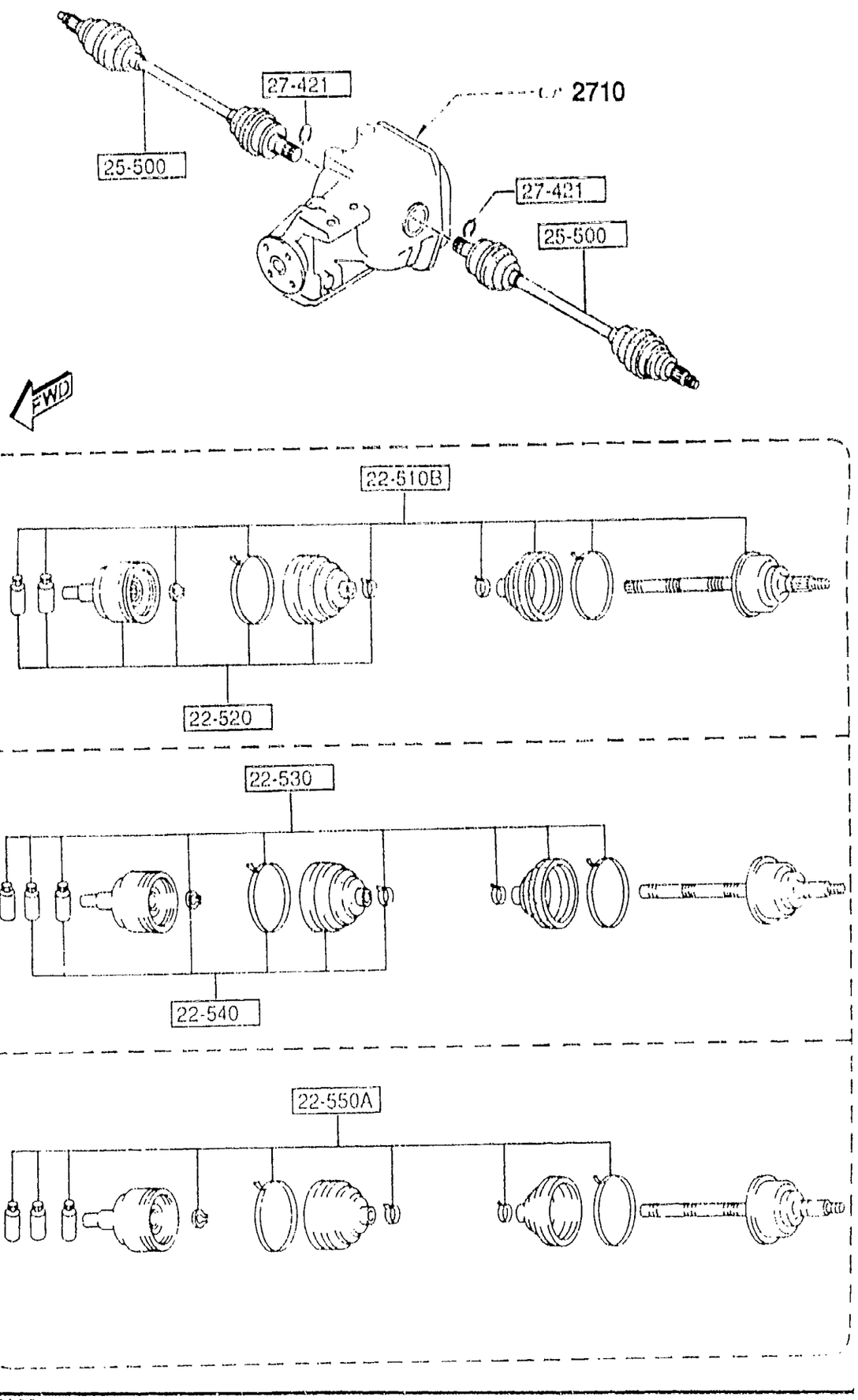

PART NO.	QTY	MODEL/RESTRICTION	MODEL/RESTRICTION	MODEL/RESTRICTION	FROM-TO
22-510B		JOINT SET,OUTER			
MA10-22-510	2				
22-520		JOINT SET,INNER			
MA10-22-520	2				
22-530		BOOT SET,OUTER JOINT			
MA10-22-530	2				
22-540		BOOT SET,INNER JOINT			
MA10-22-540	2				
22-550A		CLIP SET,DRIVE SHAFT			
MA10-22-550	2				
25-500		SHAFT,DRIVE			
MA10-25-500	2				
27-421		CLIP			
P017-27-421A	2				

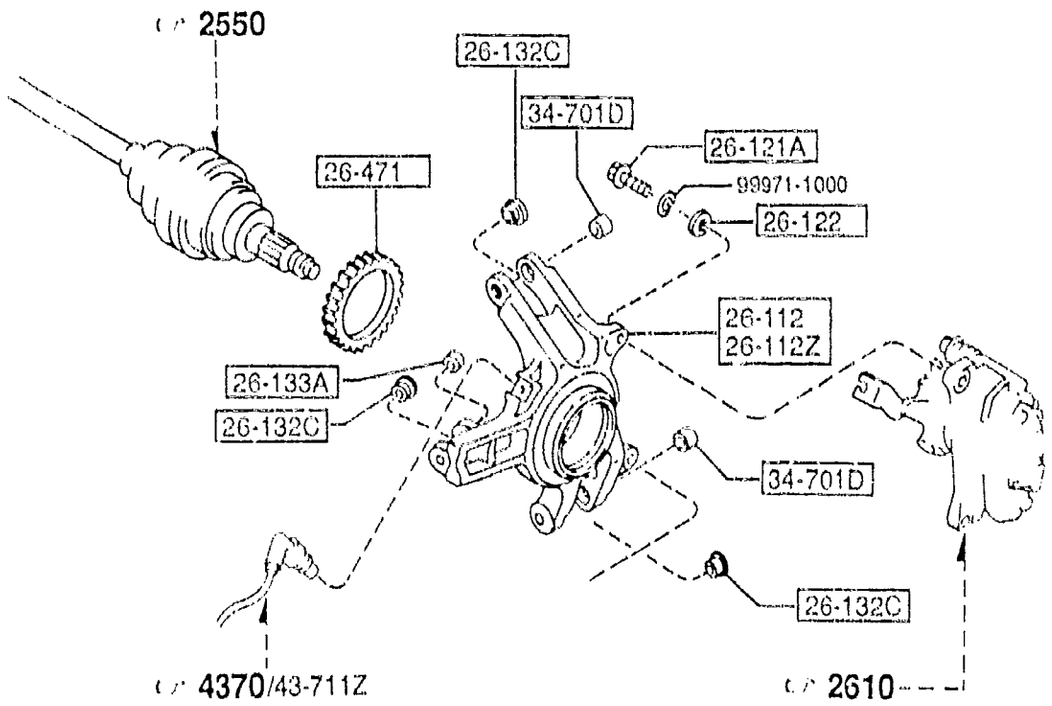

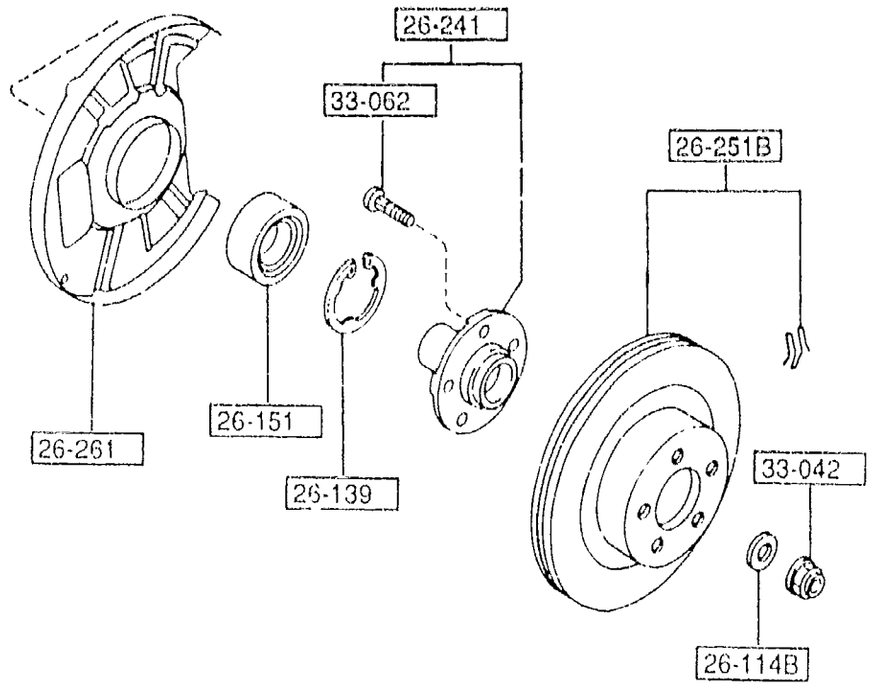

FWD

PART NO.	QTY	MODEL/RESTRICTION	MODEL/RESTRICTION	MODEL/RESTRICTION	FROM-TO
26-112 FD01-26-112	1	HUB(R),SUPPORT			
26-112Z FD01-26-122	1	HUB(L),SUPPORT			
26-114B J001-26-114	2	WASHER,PLAIN			
26-121A FB01-26-121A	4	BOLT,REAR BRAKE			
26-122 FB01-26-122	4	WASHER,PLAIN-REAR BRAKE			
26-132C FD01-26-132A	6	WASHER,SLEEVE-REAR BRAKE			
26-133A FD01-26-133B	2	SLEEVE			
26-139 J001-26-139A	2	RING,RETAINING			
26-151 J001-26-151	2	BEARING,WHEEL			
26-241 FD04-26-240A (J001-26-240B)	2	FLANGE,REAR AXLE			-4C01
J001-26-240B	2				4C01-
26-251B FD01-26-25X	2	PLATE,DISC			
26-261 FD01-26-261	2	COVER,DUST			
26-471 FD04-26-471	2	ROTOR,SENSOR-RR A.B.S.			

4C01 FD333 -400022

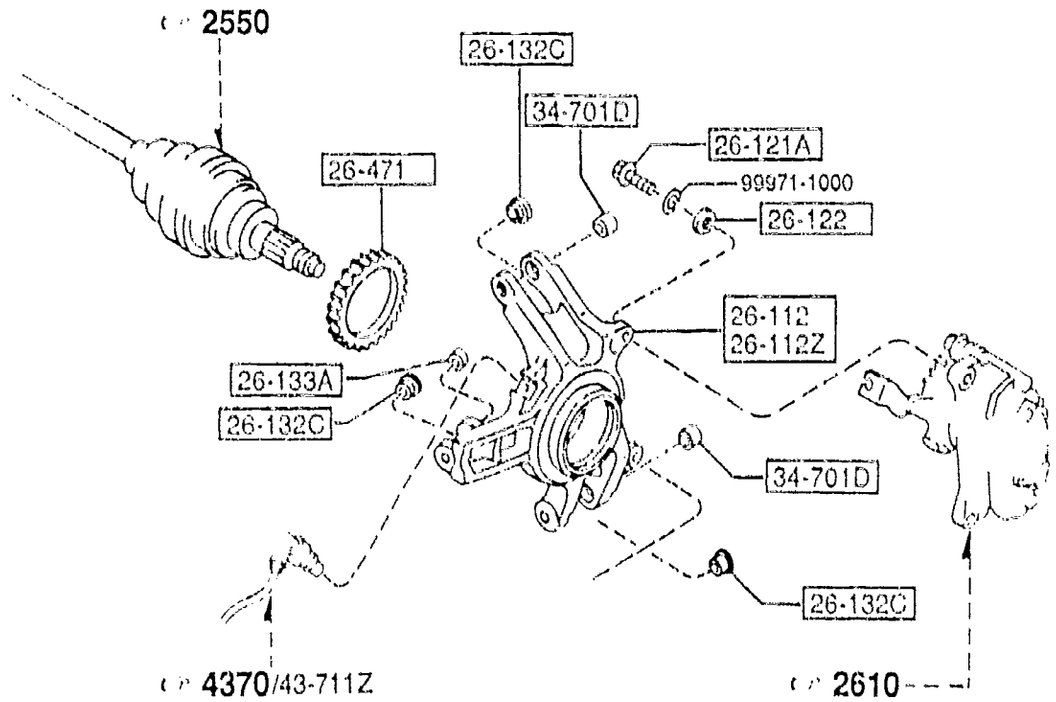

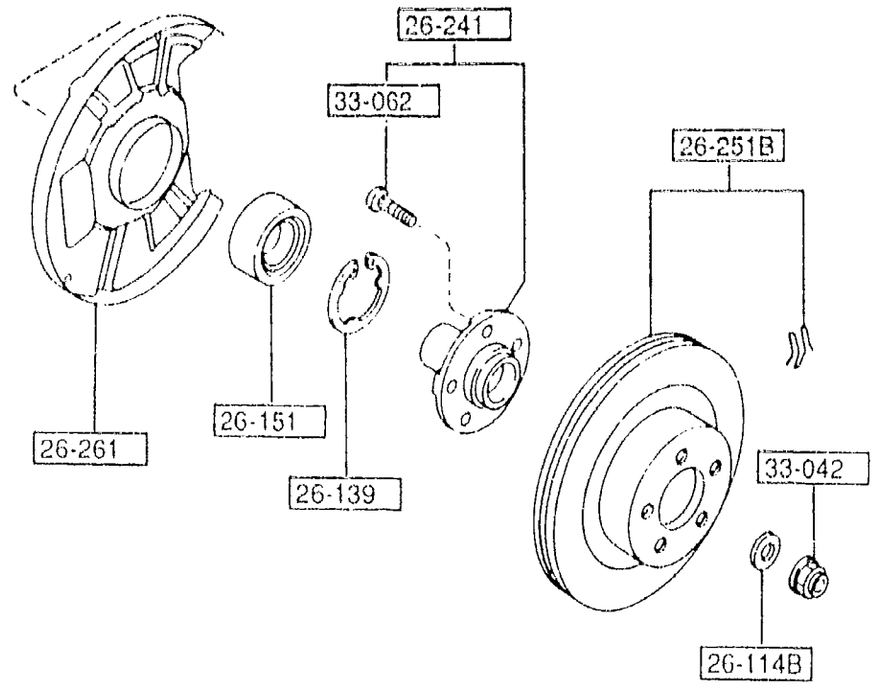

FWD

PART NO.	QTY	MODEL/RESTRICTION	MODEL/RESTRICTION	MODEL/RESTRICTION	FROM-TO
33-042		NUT			
LA01-33-042B	2				
33-062		BOLT,HUB			
B455-33-062	10				
34-701D		SLEEVE			
FD01-34-701B	4				

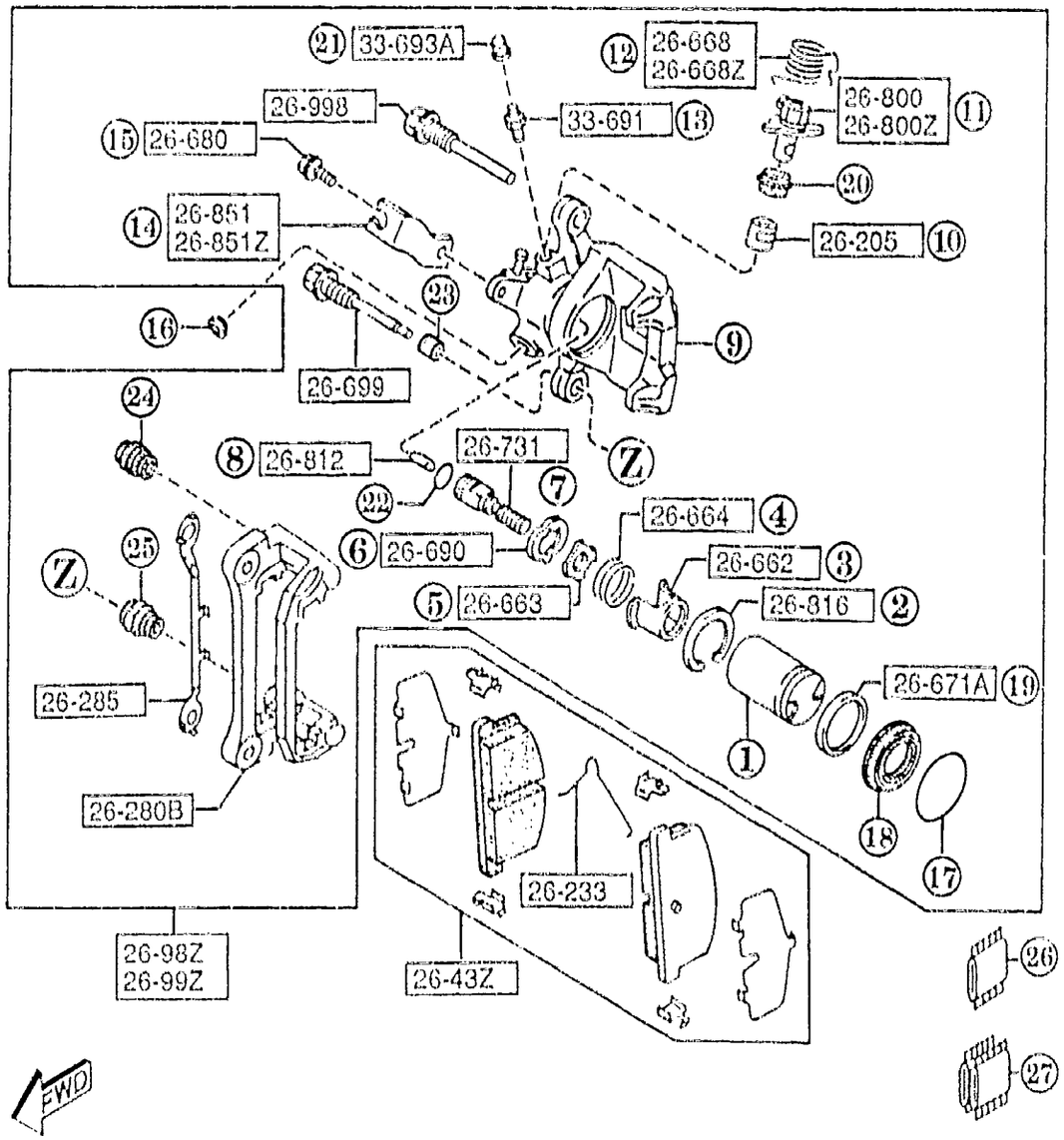

NOTE

① ··· ㉒ ⇨ 26-610 26-610Z

THE D-CODE OF 26-610 26-610Z CONSISTS OF FIGURE NUMBERS ① THROUGH ㉒.

NOTE

⑰ ··· ㉗ ⇨ 26-46Z

THE D-CODE OF 26-46Z CONSISTS OF FIGURE NUMBERS ⑰ THROUGH ㉗.

THOUGH ILLUSTRATIONS OF D-CODE 26-43Z AND 26-46Z ARE FOR LEFT SIDE ONLY, QUANTITIES OF THESE D-CODES IN THE TEXT ARE FOR ONE VEHICLE.

AUFA06

PART NO.	QTY	MODEL/RESTRICTION	MODEL/RESTRICTION	MODEL/RESTRICTION	FROM-TO
26-205		BEARING			
H001-26-205	2				
26-233		SPRING'V',REAR BRAKE			
FD01-26-233	2				
26-280B		SUPPORT,MOUNTING			
FD01-26-281	2				
26-285		PLATE,GUARD-CALIPER BRAKE			
FD01-26-285A	2				
26-43Z		PAD SET,RR CALIPER			
FDY1-26-43Z		NON ASBESTOS			
AN(FDY1-26-43ZA)	1				-5C01
*FDY1-26-43ZA	1				5C01-
26-46Z		SEAL & BOOT SET,CAL.-RR			
FDY1-26-46Z	1				
26-610		BODY & PISTON(R),CALIPER			
FD01-26-61X	1				
26-610Z		BODY & PISTON(L),CALIPER			
FD01-26-71X	1				
26-662		COVER,CASE			
B462-26-662	2				
26-663		WASHER,SPRING			
B462-26-663	2				
26-664		SPRING			
B462-26-664	2				
26-668		SPRING(R),LEVER			
FD01-26-668	1				
26-668Z		SPRING(L),LEVER			
FD01-26-669	1				

5C01 FD333 -400331

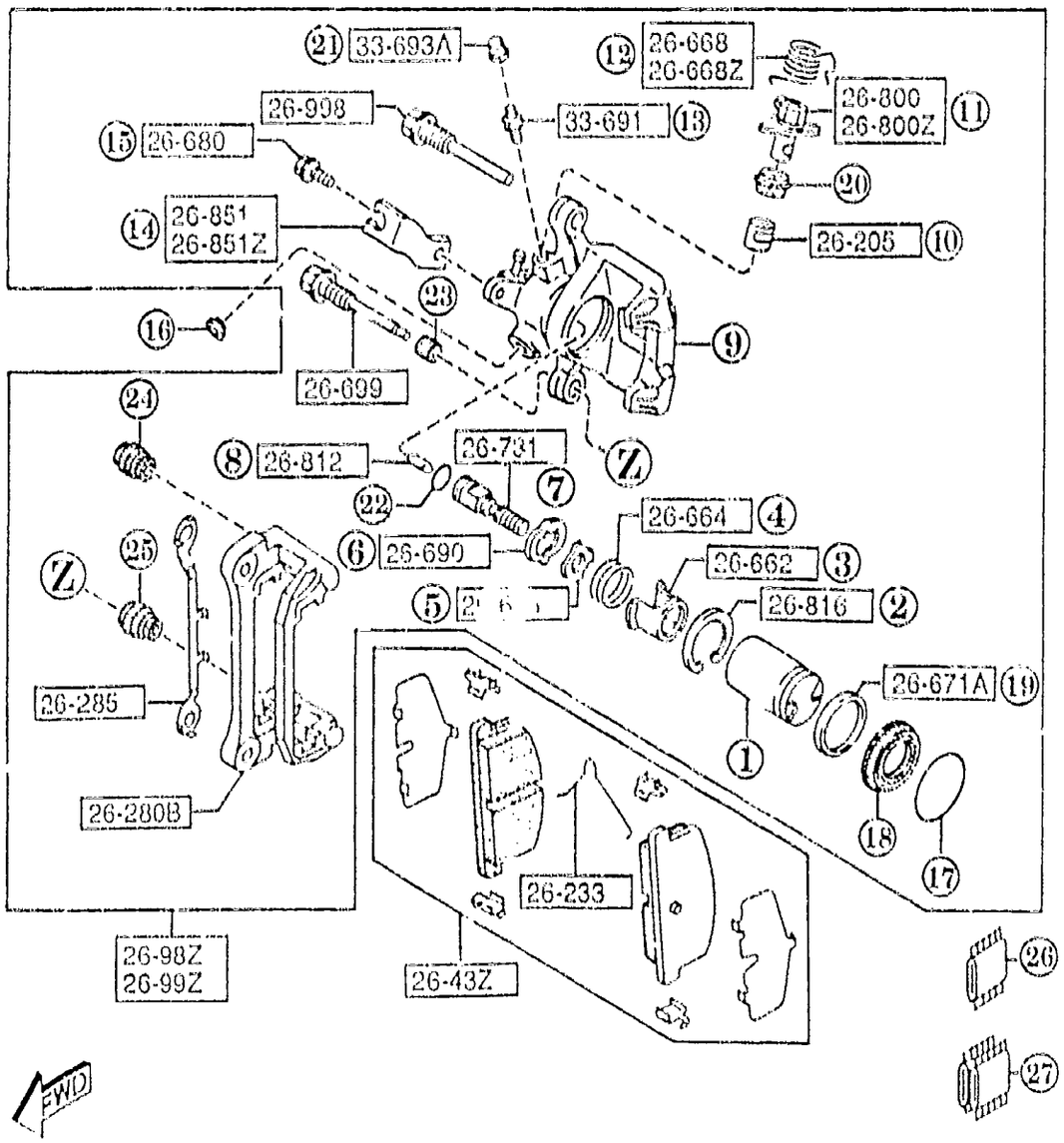

NOTE

① ··· ㉒ ⇨ 26-610 26-610Z

THE D-CODE OF 26-610 26-610Z CONSISTS OF FIGURE NUMBERS ① THROUGH ㉒.

NOTE

⑰ ··· ㉗ ⇨ 26-46Z

THE D-CODE OF 26-46Z CONSISTS OF FIGURE NUMBERS ⑰ THROUGH ㉗.

THOUGH ILLUSTRATIONS OF D-CODE 26-43Z AND 26-46Z ARE FOR LEFT SIDE ONLY, QUANTITIES OF THESE D-CODES IN THE TEXT ARE FOR ONE VEHICLE.

PART NO.	QTY	MODEL/RESTRICTION	MODEL/RESTRICTION	MODEL/RESTRICTION	FROM-TO
26-671A 1243-26-671	2	SEAL,PISTON			
26-680 FA18-26-680	2	BOLT			
26-690 B462-26-694	2	STOPPER,CALIPER-RR			
26-699 FD01-26-699	2	PIN,LOCK			
26-731 FD01-26-731	2	SPINDLE,ADJUSTER			
26-800 FD01-26-800	1	LEVER(R),OPERATING			
26-800Z FD01-26-810	1	LEVER(L),OPERATING			
26-812 H001-26-812	2	LINK,CONNECTING			
26-816 GJ25-26-816	2	RING,SNAP-RR CALIPER			
26-851 FD01-26-851	1	BRACKET(R),CABLE			
26-851Z FD01-26-861	1	BRACKET(L),CABLE			
26-98Z FD01-26-98Z	1	CALIPER(R),PADLESS-RR			
26-99Z FD01-26-99Z	1	CALIPER(L),PADLESS-RR			
26-998 FD01-26-998	2	PIN,GUIDE			

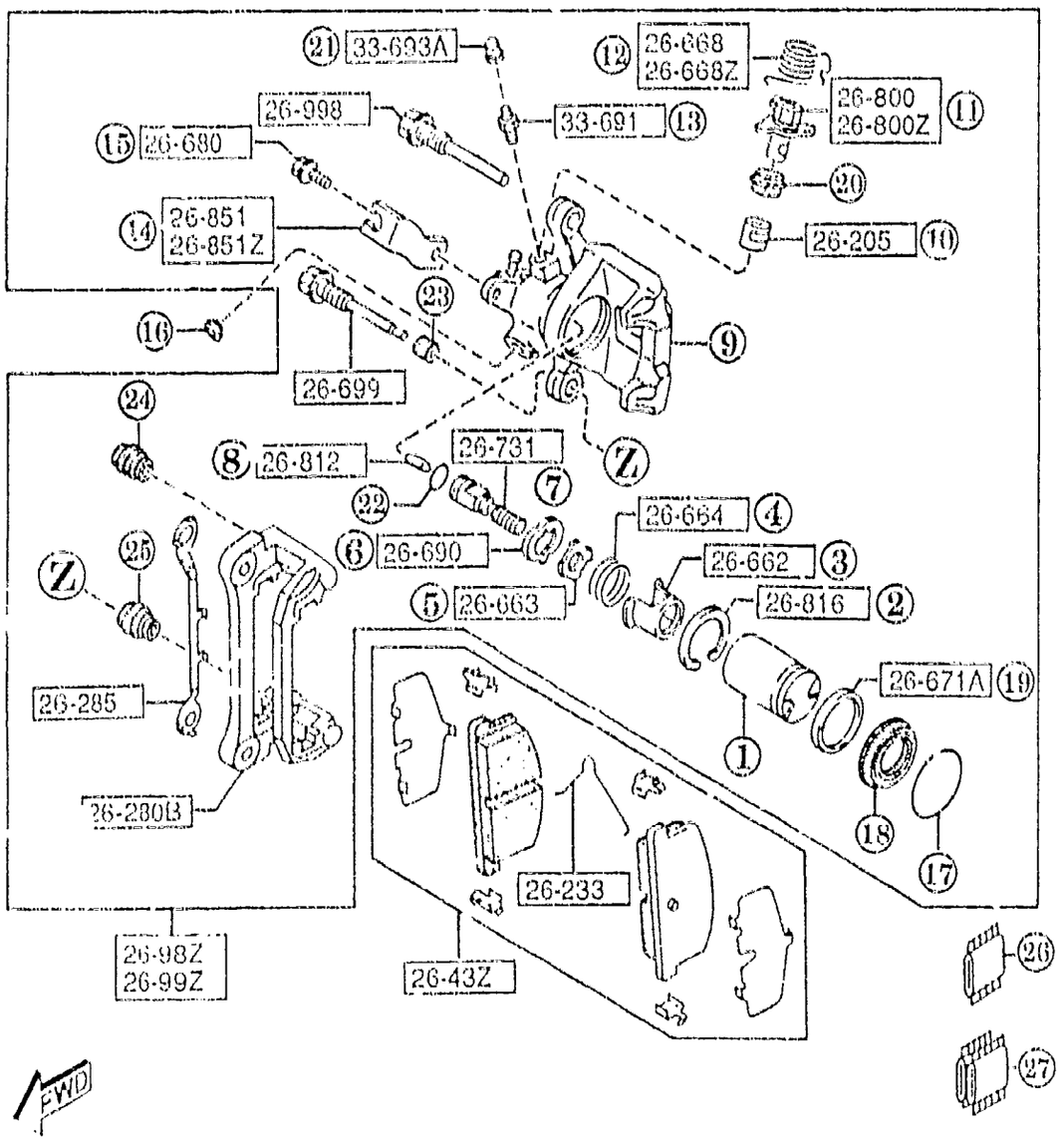

NOTE

① ··· ㉒ ⇨ 26-610 26-610Z

THE D-CODE OF 26-610 26-610Z CONSISTS OF FIGURE NUMBERS ① THROUGH ㉒.

NOTE

⑰ ··· ㉗ ⇨ 26-46Z

THE D-CODE OF 26-46Z CONSISTS OF FIGURE NUMBERS ⑰ THROUGH ㉗.

THOUGH ILLUSTRATIONS OF D-CODE 26-43Z AND 26-46Z ARE FOR LEFT SIDE ONLY, QUANTITIES OF THESE D CODES IN THE TEXT ARE FOR ONE VEHICLE.

PART NO.	QTY	MODEL/RESTRICTION	MODEL/RESTRICTION	MODEL/RESTRICTION	FROM-TO
33-691		SCREW,BLEEDER			
0233-33-691	2				
33-693A		CAP,BLEEDER SCREW			
1316-33-693	2				

2710 -1 REAR DIFFERENTIALS

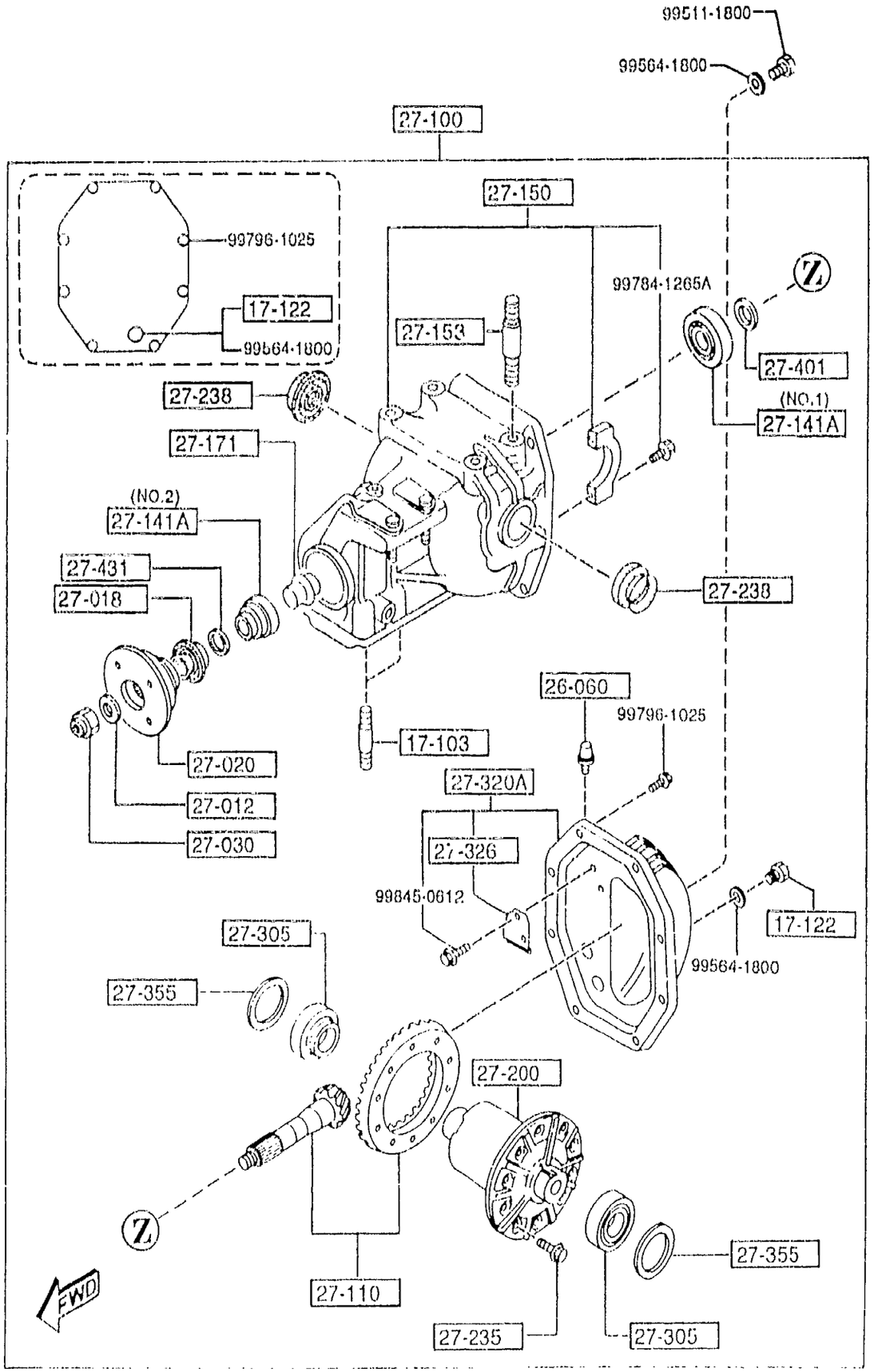

PART NO.	QTY	MODEL/RESTRICTION	MODEL/RESTRICTION	MODEL/RESTRICTION	FROM-TO
17-103		BOLT			
R526-17-103	2				
17-122		PLUG,MAGNET			
0810-17-121	1				
26-060		BREATHER			
0730-26-060	1				
27-012		WASHER			
0223-27-012	1				
27-018		SEAL,OIL			
R001-27-165	1				-5508
RA02-27-165	1				5508-
27-020		FLANGE,COMPANION			
P044-27-120B	1	(AT)			-5301
P045-27-120A	1	(MT)			-5301
P045-27-120B	1	(MT)			5301-
RA02-27-120	1	(AT)			5301-
27-030		NUT,LOCK			
0223-27-030	1				
27-100		DRIVING & DIFF.			
R010-27-100B	1	(AT)			
R008-27-100C	1	(MT)			-4C01
RM01-27-100	1	(MT)			4C01-
27-110		GEAR SET,FINAL			
P062-27-110	1	R=3.909 (AT)			
P061-27-110 AN(P061-27-110A)	1	R=4.100 (MT)			-5601
P061-27-110A	1	R=4.100 (MT)			5601-
27-141A		BEARING,PINION			
R001-27-210	1	(ILLUST. NO.1)			

4C01 FD333 -400022
5301 FD333 -400027
5508 FD333 -400229
5601 FD333 -400230

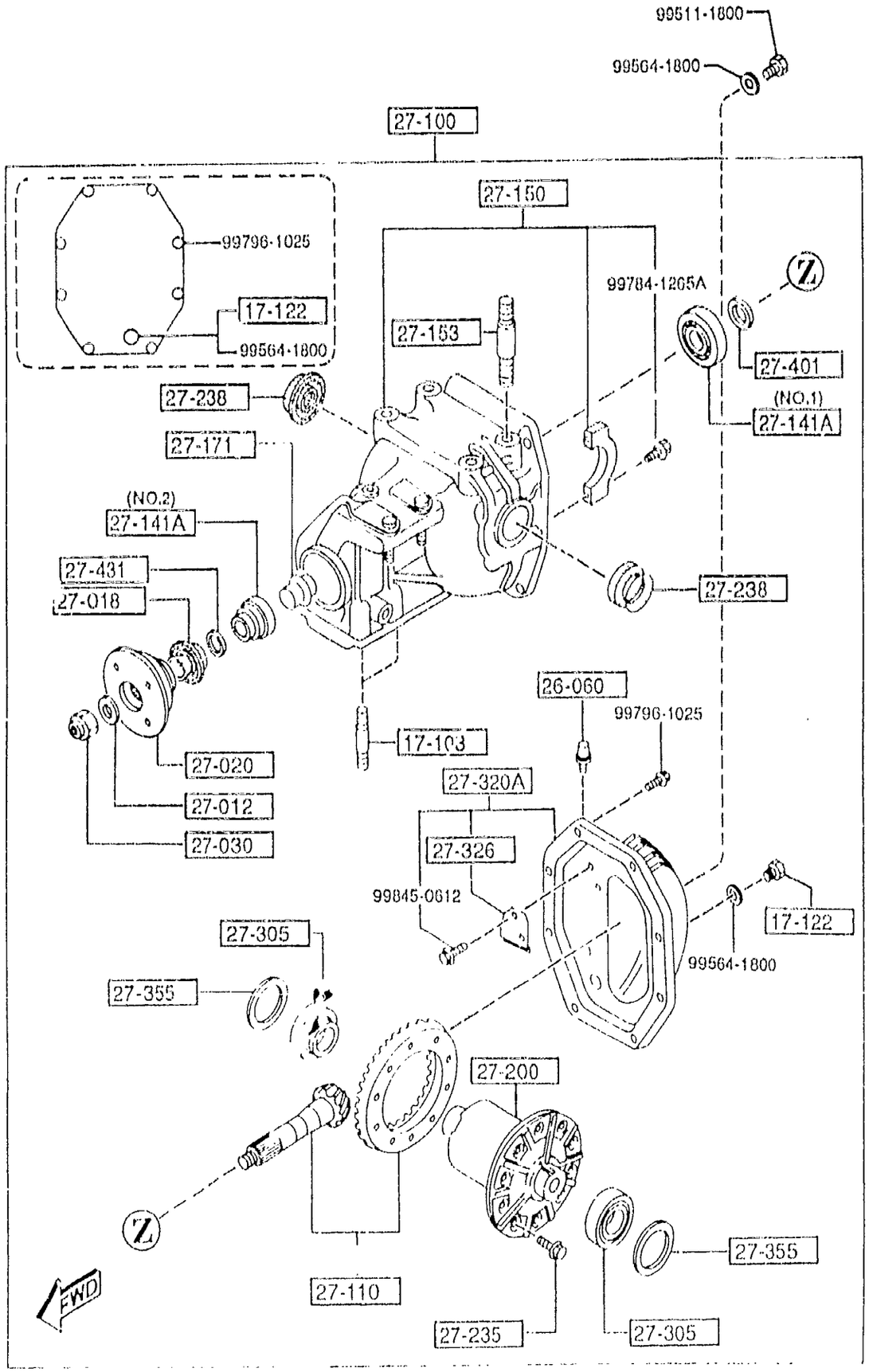

PART NO.	QTY	MODEL/RESTRICTION	MODEL/RESTRICTION	MODEL/RESTRICTION	FROM-TO
CONT'D					
0604-27-220	1	(ILLUS., NO.2)			
27-150		CARRIER,DIFFERENTIAL			
R005-27-150	1				
27-153		BOLT			
R003-27-153	4				
27-171		PIECE,DISTANCE			
R004-27-171	1				
27-200		DIFFERENTIAL			
P099-27-200E	1	(MT)			
R008-27-200B	1	(AT)			
27-235		BOLT,RING GEAR			
8051-27-235	10	D=10.0MM			
8051-27-236	10	D=10.2MM			
27-238		SEAL,OIL			
P043-27-238	2				-4C01
R004-27-238	2				4C01-
27-305		BEARING			
0118-27-350A	2				
27-320A		COVER,REAR			
R005-27-320	1				
27-326		PLATE,BAFFLE			
M005-27-326A	1				
27-355		SHIM,ADJUST			
R001-27-355	2	T=5.5MM			
R001-27-356	2	T=5.6MM			
R001-27-357	2	T=5.65MM			
R001-27-358		T=5.7MM			

4C01 FD333 -400022

2710 -3 REAR DIFFERENTIALS

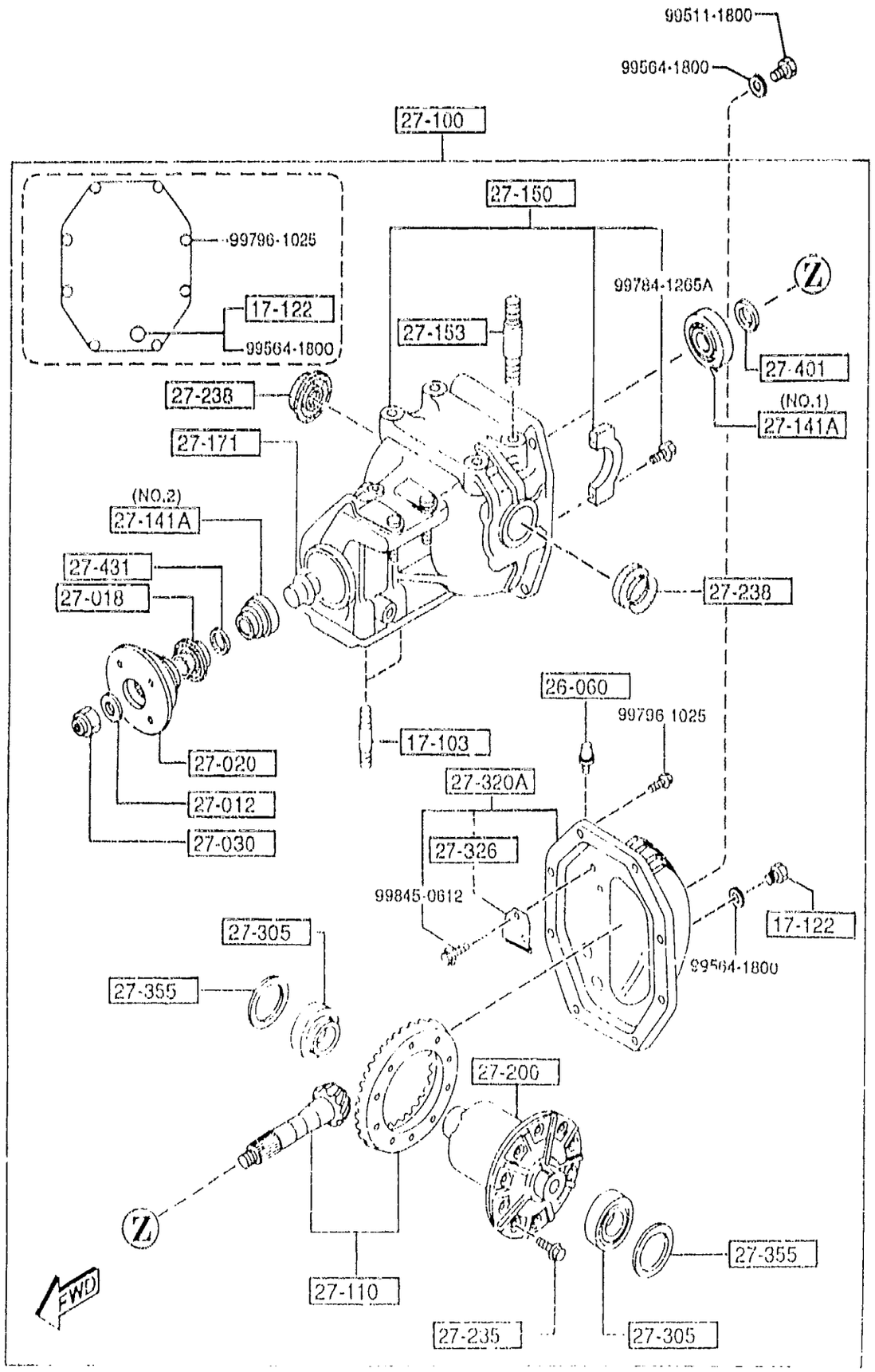

PART NO.	QTY	MODEL/RESTRICTION	MODEL/RESTRICTION	MODEL/RESTRICTION	FROM-TO
CONT'D	2				
R001-27-359	2	T=5.75MM			
R001-27-361	2	T=5.8MM			
R001-27-362	2	T=5.85MM			
R001-27-363	2	T=5.9MM			
R001-27-364	2	T=5.95MM			
R001-27-365	2	T=6MM			
R001-27-366	2	T=6.05MM			
R001-27-367	2	T=6.1MM			
R001-27-368	2	T=6.15MM			
R001-27-369	2	T=6.2MM			
R001-27-371	2	T=6.25MM			
R001-27-372	2	T=6.3MM			
R001-27-373	2	T=6.35MM			
R001-27-374	2	T=6.4MM			
R001-27-375	2	T=6.5MM			
27-401		SPACER			
R001-27-401	1	T=3.47MM			
R001-27-402	1	T=3.08MM			
R001-27-403	1	T=3.11MM			
R001-27-404	1	T=3.14MM			
R001-27-405	1	T=3.17MM			
R001-27-406	1	T=3.2MM			

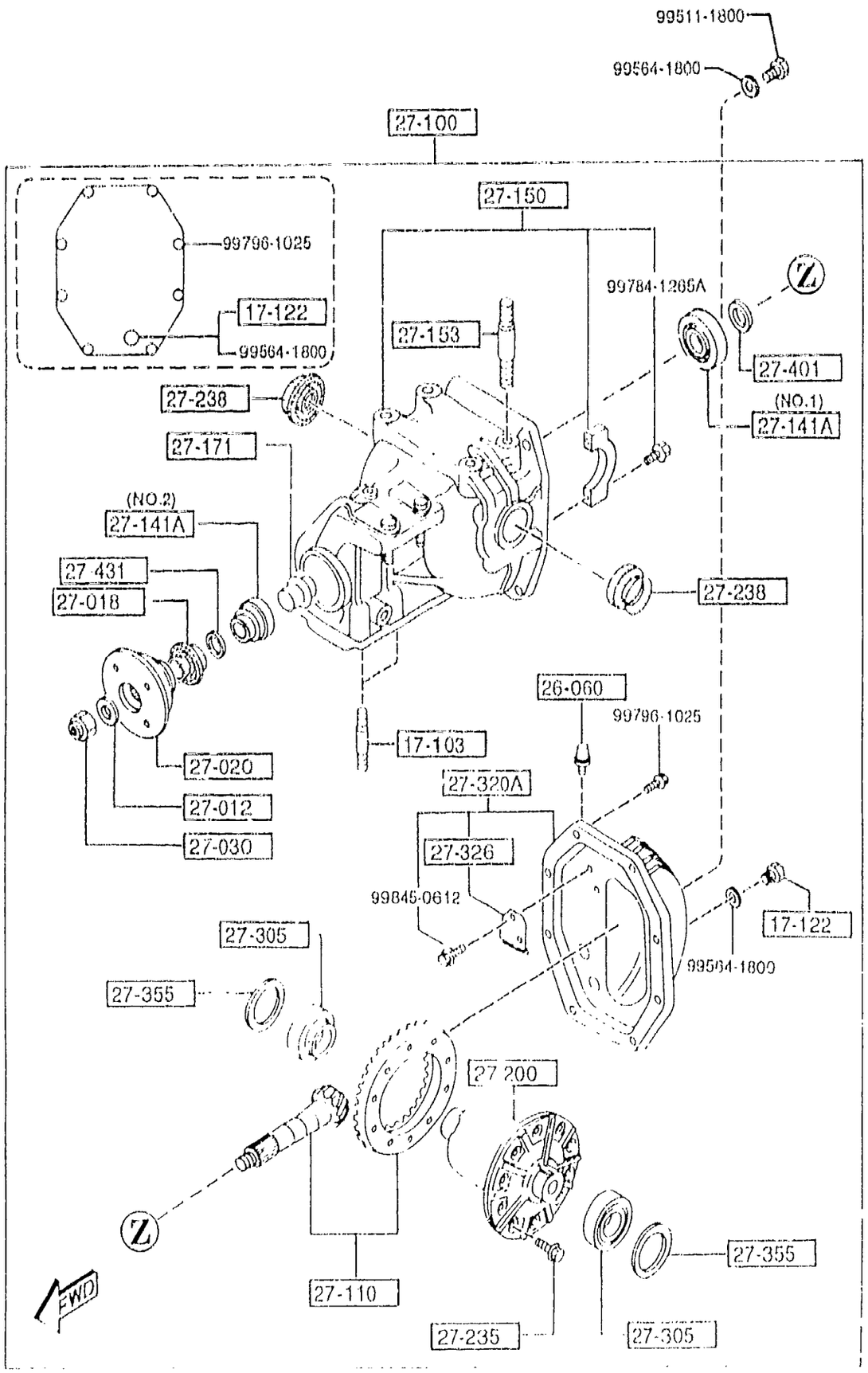

PART NO.	QTY	MODEL/RESTRICTION	MODEL/RESTRICTION	MODEL/RESTRICTION	FROM TO
CONT'D					
R001-27-407	1	T=3.23MM			
R001-27-408	1	T=3.26MM			
R001-27-409	1	T=3.29MM			
R001-27-411	1	T=3.32MM			
R001-27-412	1	T=3.35MM			
R001-27-413	1	T=3.38MM			
R001-27-414	1	T=3.41MM			
R001-27-415	1	T=3.44MM			
+---------+					
| 27-431 |		SPACER			
+---------+					
PA01-27-431	1				

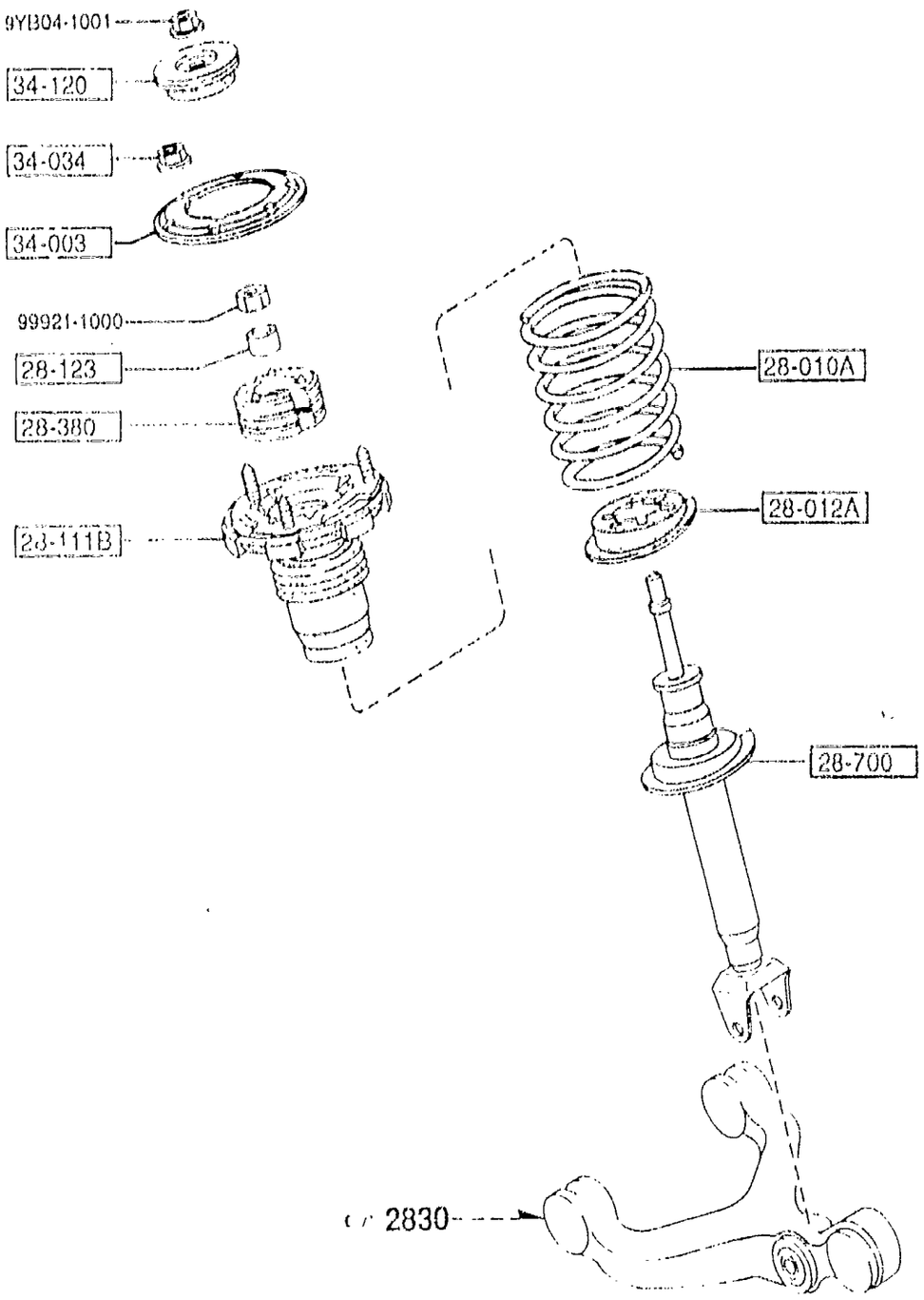

PART NO.	QTY	MODEL/RESTRICTION	MODEL/RESTRICTION	MODEL/RESTRICTION	FROM-TO
28-010A		SPRING,COIL-REAR			
FD15-28-011B	2				
28-012A		SHEET,RUBBER			
FD01-28-012	2				
28-111B		STOPPER,BUMP			
FD15-28-110A	2				
28-123		SPACER			
FD01-28-123A	2				
28-380		RUBBER,MOUNTING			
FD15-28-380A	2				
28-700		DAMPER,REAR			
FD15-28-700A	2	(NOR. SUSP)			
*FD16-28-700A	2	(HARD SUSP)			
34-003		SHEET,FRT DAMPER			
FD01-34-003	2				
34-034		NUT,FLANGE			
H380-34-034A	6				
34-120		STOPPER			
FD01-34-120	2				

2810 REAR STABILIZER

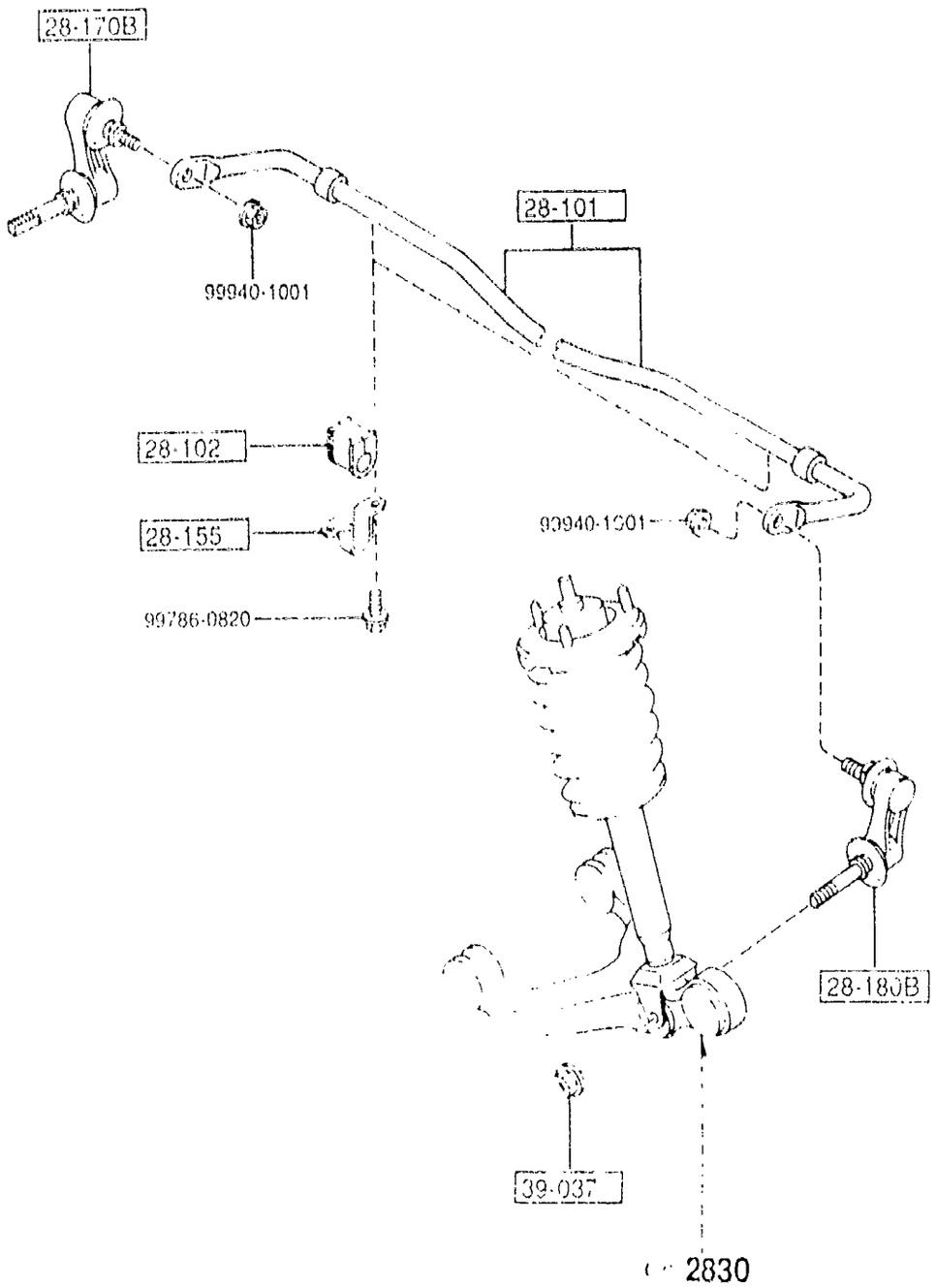

PART NO.	QTY	MODEL/RESTRICTION	MODEL/RESTRICTION	MODEL/RESTRICTION	FROM-TO
28-101		STABILIZER,RR			
FD15-28-151A	1	(HARD SUSP)			
F123-28-151	1	(NOR. SUSP)			
28-102		BUSH,STABILIZER-RR			
FD15-28-156A	2	(HARD SUSP)			
F123-28-156	2	(NOR. SUSP)			
28-155		PLATE,STABILIZER-RR			
FD01-28-155A	2				
28-170B		LINK,CONTROL-STAB			
FD01-28-170B	1				
28-180B		LINK,CONTROL			
FD01-28-180B	1				
39-037		NUT			
B001-39-037B	2				

2830 -1 REAR LOWER ARMS & SUB FRAME

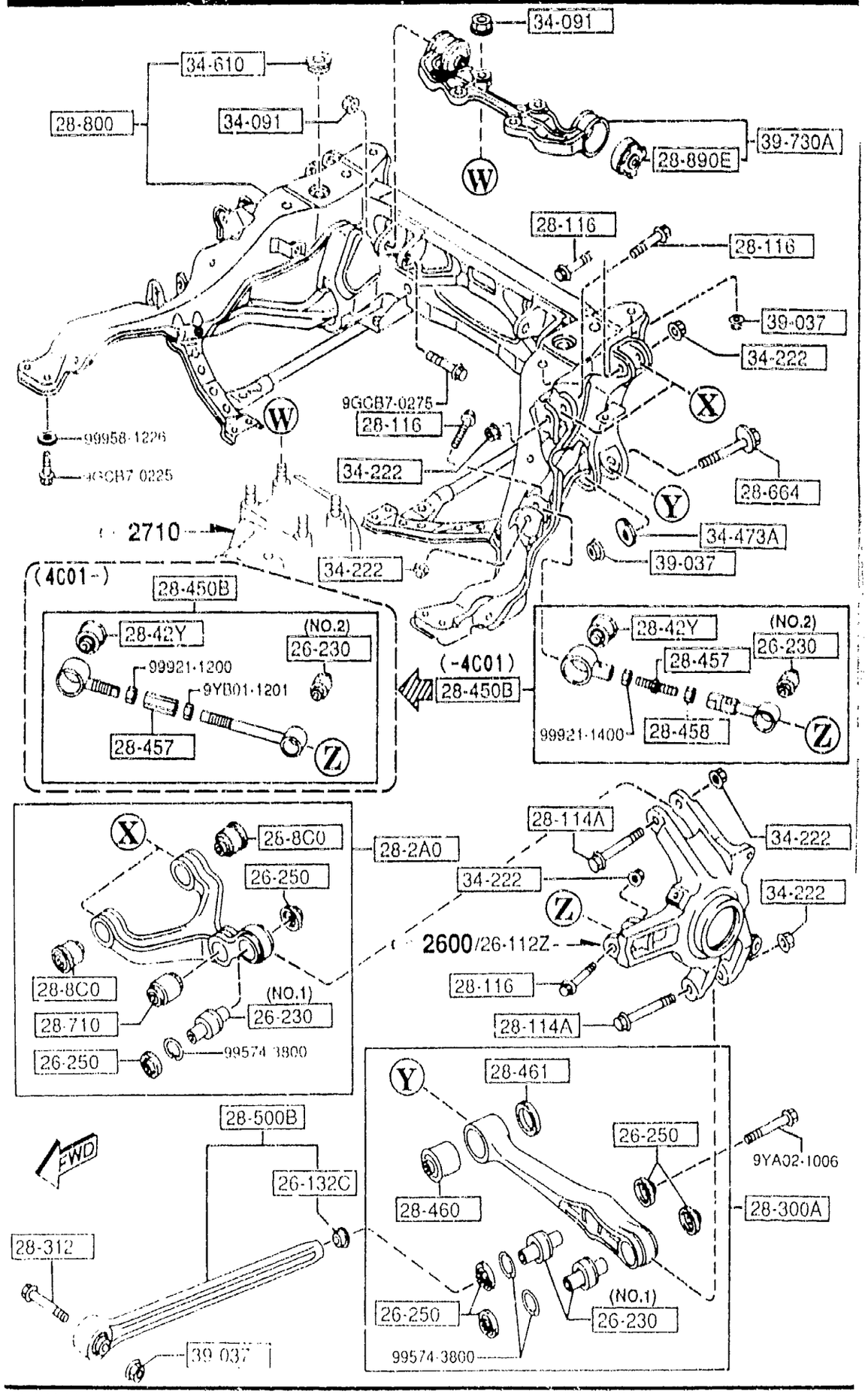

PART NO.	QTY	MODEL/RESTRICTION	MODEL/RESTRICTION	MODEL/RESTRICTION	FROM-TO
26-132C		WASHER,SLEEVE-REAR B RAKE			
FD01-26-132A	2				
26-230		BALL,PILLOW-RR LOWER ARM			
FD01-26-220	6	(ILLUST. NO.1)			
FD01-26-230	2	(ILLUST. NO.2)			
26-250		RUBBER,SEAL-RR LOWER ARM			
FD01-26-250	12				
28-114A		BOLT			
FD01-28-114	4				
28-116		BOLT			
FD01-28-116	8				
28-2A0		ARM,UPPER-REAR			
FD01-28-2A0B	2	(HARD SUSP)			
F123-28-2A0A	2	(NOR. SUSP)			
28-300A		ARM,LOWER-REAR			
FD01-28-300B	2				
28-312		BOLT'A',LINK			
H266-28-312	2				
28-42Y		BUSH,PILLOW BALL			
FD01-28-42Y	2				
28-450B		LINK,TOE CONTROL			
FD01-28-450B	2				-4C01
AN(FD02-28-450)					
FD02-28-450	2				4C01-
28-457		BOLT			
FD01-28-457	2				-4C01
FD02-28-456	2				4C01-
28-458		NUT			
FD01-28-458	2				-4C01

4C01 FD333 -400022

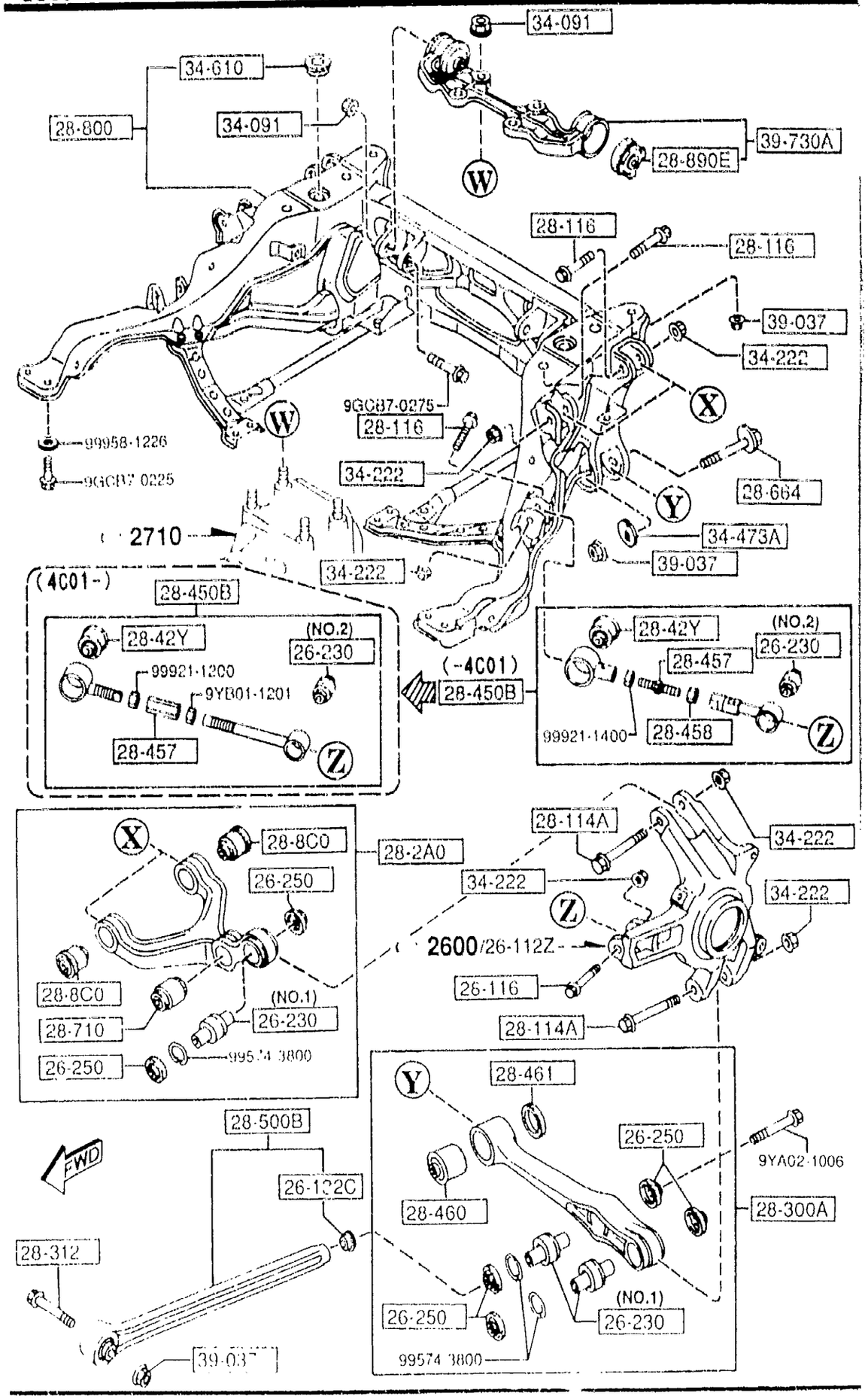

AUFA06

PART NO.	QTY	MODEL/RESTRICTION	MODEL/RESTRICTION	MODEL/RESTRICTION	FROM-TO
28-460		BUSHING,LOWER ARM			
FD01-28-460	2				
28-461		STOPPER,LOWER ARM			
FD01-28-461	2				
28-500B		LINK,LOWER-FRONT			
FD15-28-50X	2	(NOR. SUSP)			
FD16-28-50X	2	(HARD SUSP)			
28-664		BOLT,ADJUST			
FD01-28-664	2				
28-710		BUSH,DAMPER			
FD01-28-710A	2				
28-8C0		BUSHING,RUBBER			
FD01-28-8C0A	4	(HARD SUSP)			
28-800		FRAME,SUB			
FD15-28-80XB	1				
28-890E		RUBBER,MOUNT.-DIFF.CASING			
FD01-28-890A	2				
34-091		NUT			
B455-34-091	6				
34-222		NUT			
8871-34-222	12				
34-473A		PLATE,CAM			
FD01-34-473	2				
34-610		RUBBER,MOUNTING			
FD01-34-610A	2				
39-037		NUT			
B001-39-037B	8				

CAT. AUFA06-04

1997-01

2830 REAR LOWER ARMS & SUB FRAME

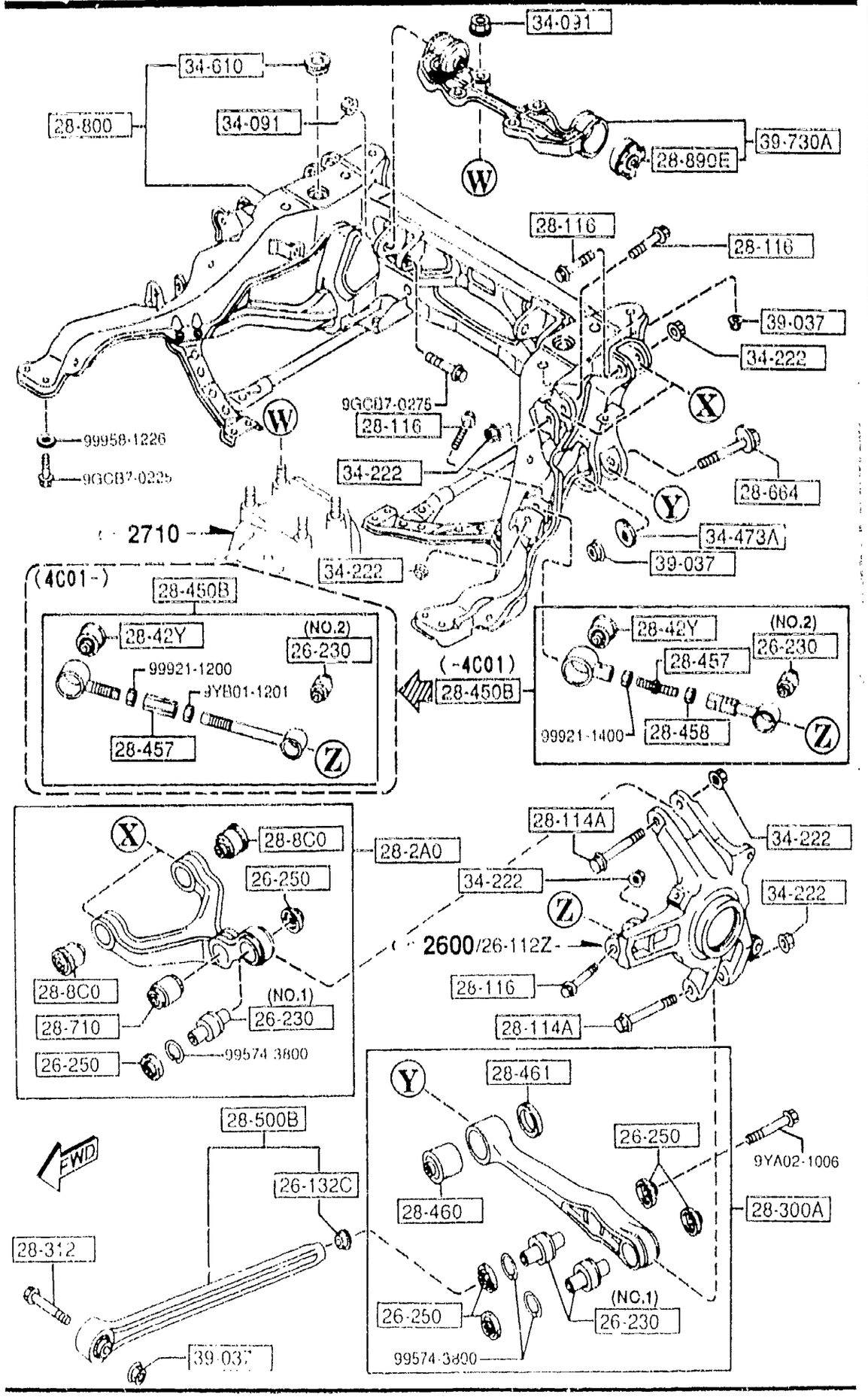

PART NO	QTY	MODEL/RESTRICTION	MODEL/RESTRICTION	MODEL/RESTRICTION	FROM-TO
39-730A		BRACKET,DIFF.MOUNTING			
FD01-39-730A	1				

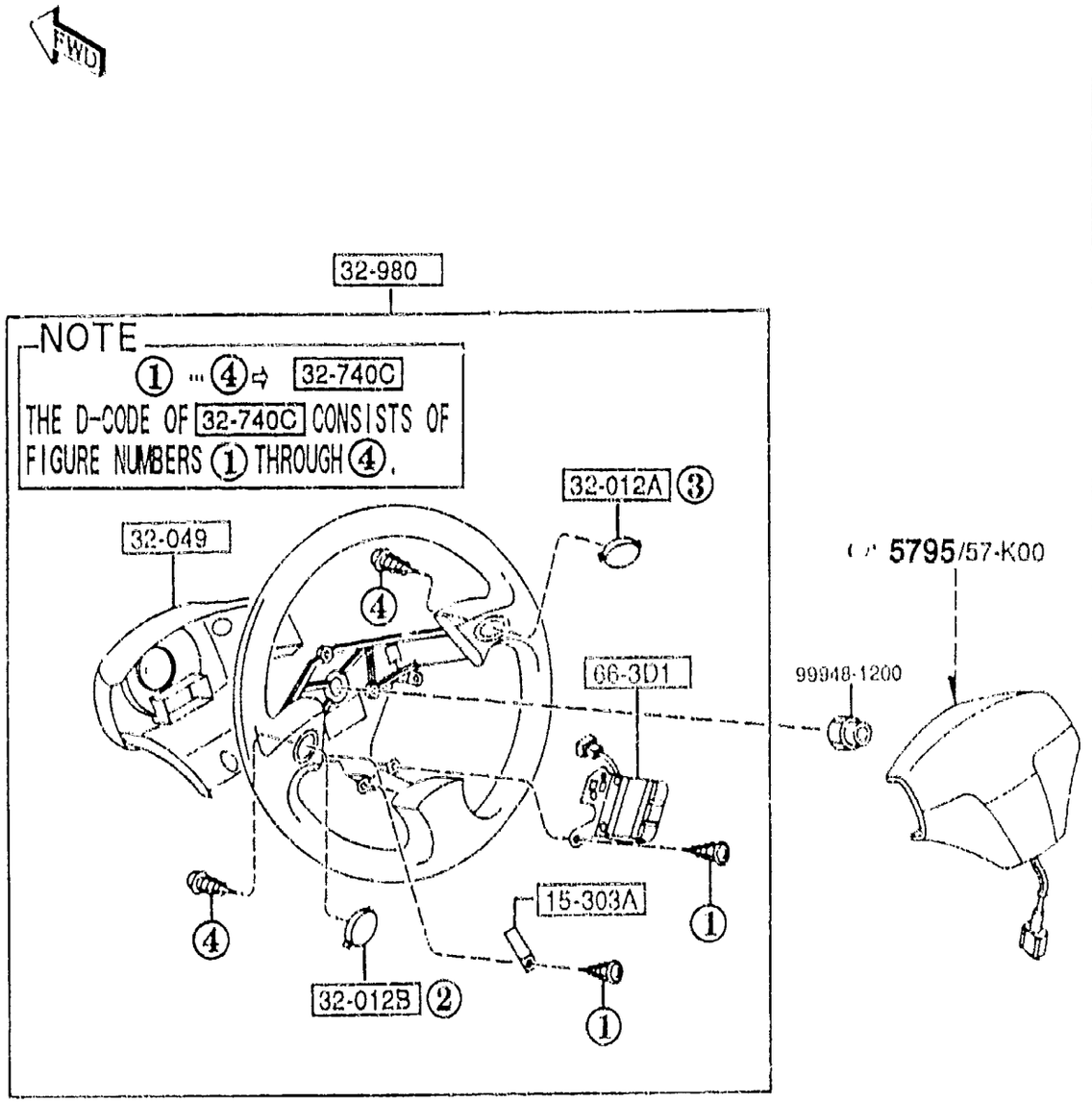

PART NO.	QTY	MODEL/RESTRICTION	MODEL/RESTRICTION	MODEL/RESTRICTION	FROM-TO
15-303A		CLIP			
2667-15-303A	2				
32-012A		BUTTON(R),HORN			
FD01-32-81X	1				
32-012B		BUTTON(L),HORN			
FD01-32-810	1				
32-049		COVER,WHEEL CORE			
FD01-32-049	1	(NOR. SUSP)			
FD03-32-049	1	(HARD SUSP)			
32-740C		PARTS SET,ST. WHEEL			
FD01-32-750	1				
32-980		BOSS,STEERING WHEEL			
FD01-32-980E	1	(NOR. SUSP)			
FD03-32-980E	1	(HARD SUSP)			
66-3D1		SWITCH,AUTOCRUISE			
FD01-66-3D1A	1	(NOR. SUSP)			

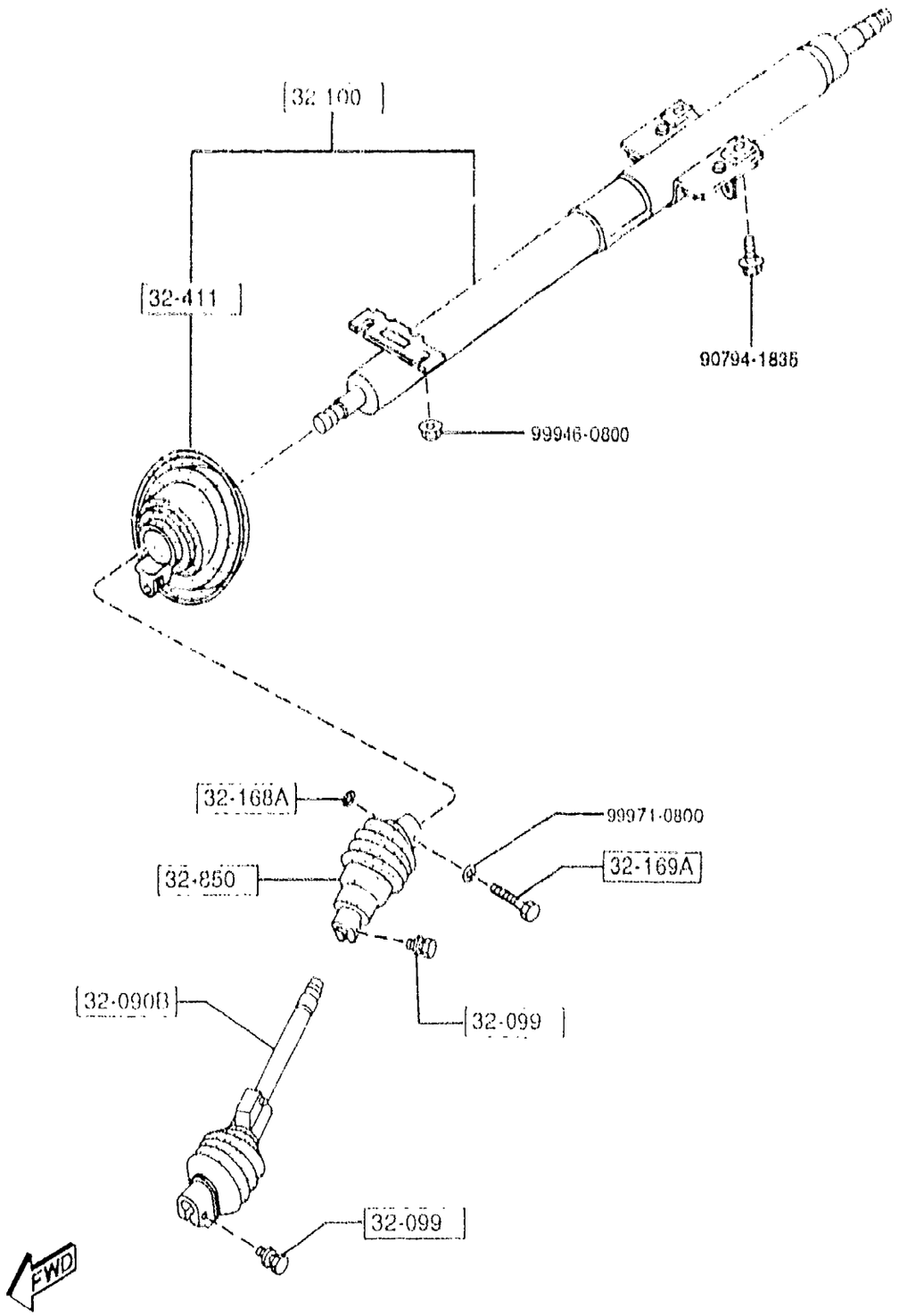

3210 -1 * STEERING COLUMN & SHAFTS

PART NO.	QTY	MODEL/RESTRICTION	MODEL/RESTRICTION	MODEL/RESTRICTION	FROM TO
32-090B		SHAFT,INTERMED.			
FD01-32-090A	1				
32-099		BOLT,SHAFT			
B455-32-099	2				
32-100		SHAFT,ENGY.ABSORBER			
FD15-32-100	1				
32-168A		WASHER,STOP			
FB01-32-168	1				
32-169A		BOLT			
B001-32-169A	1				
32-411		COVER,DUST			
FD15-32-411	1				
32-850		JOINT,STEERING			
FD15-32-850	1				

3220 -1 STEERING GEAR

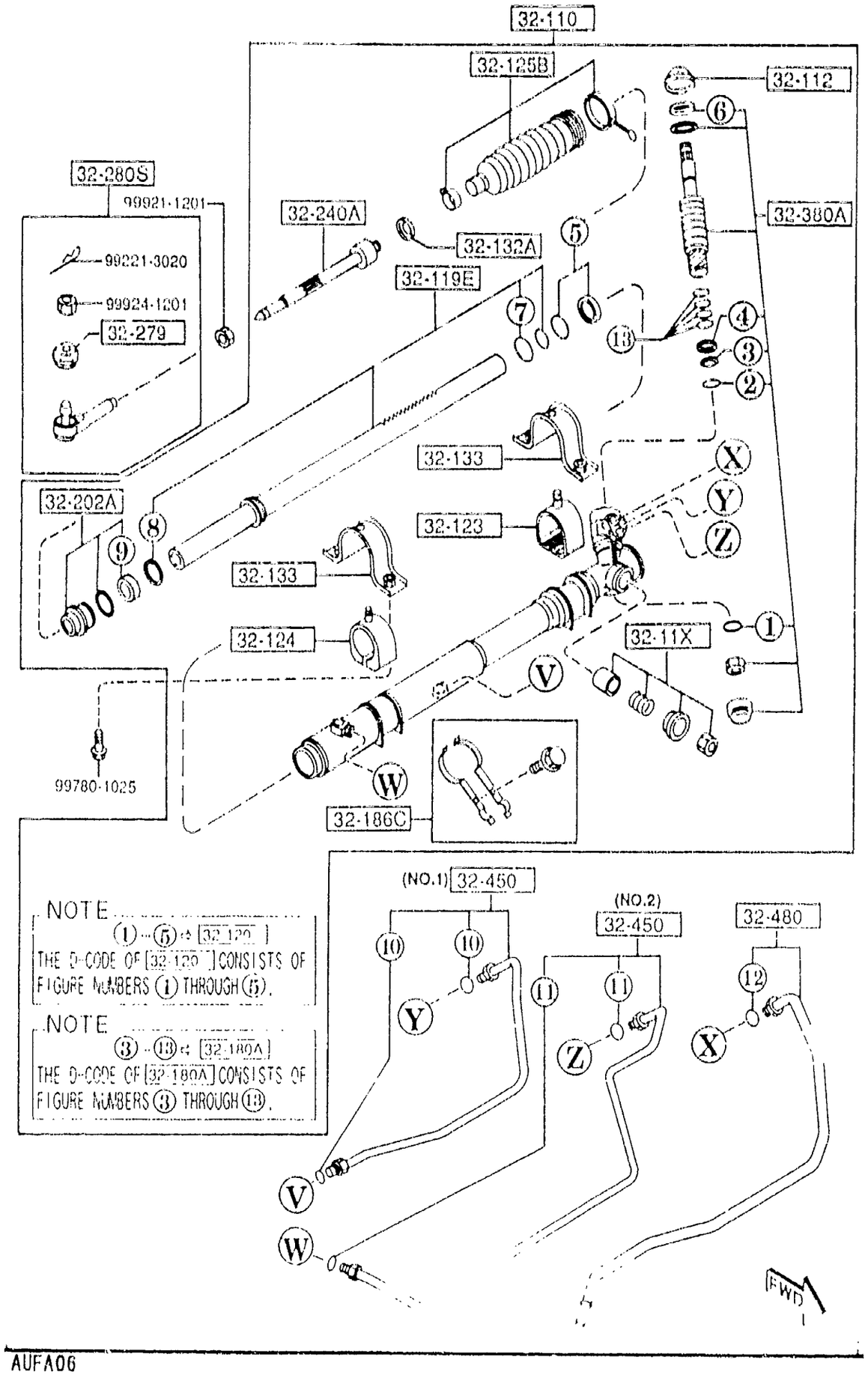

NOTE
① - ⑤ : [32-120]
THE D-CODE OF [32-120] CONSISTS OF FIGURE NUMBERS ① THROUGH ⑤.

NOTE
③ - ⑬ : [32-180A]
THE D-CODE OF [32-180A] CONSISTS OF FIGURE NUMBERS ③ THROUGH ⑬.

PART NO.	QTY	MODEL/RESTRICTION	MODEL/RESTRICTION	MODEL/RESTRICTION	FROM-TO
32-11X		YOKE SET,SUPPORT-ST. GEAR			
FD01-32-11X	1				
32-110		GEAR,STEERING			
FD15-32-110B	1				
32-112		COVER,DUST			
FD01-32-112	1				
32-119E		RACK,STEERING GEAR			
FD01-32-119A	1				
32-120		HOUSING,GEAR			
FD01-32-120	1				
32-123		RUBBER,MOUNTING			
F110 32-123	1				
32-124		RUBBER,MOUNTING			
FD01-32-124	1				
32-125B		BOOT,RACK			
FD01-32-125A	1	(FOR RIGHT)			
FD02-32-125A	1	(FOR LEFT)			
32-132A		WASHER			
FD01-32-132	2				
32-133		PLATE,CLAMP			
FD01-32-133	2				
32-180A		SEAL KIT,ST. GEAR			
FD01-32-180	1				
32-186C		CLIP KIT,ST. GEAR			
FD01-32-186	1				
32-202A		STOPPER,RACK-ST.GEAR			
FD01-32-202	1				

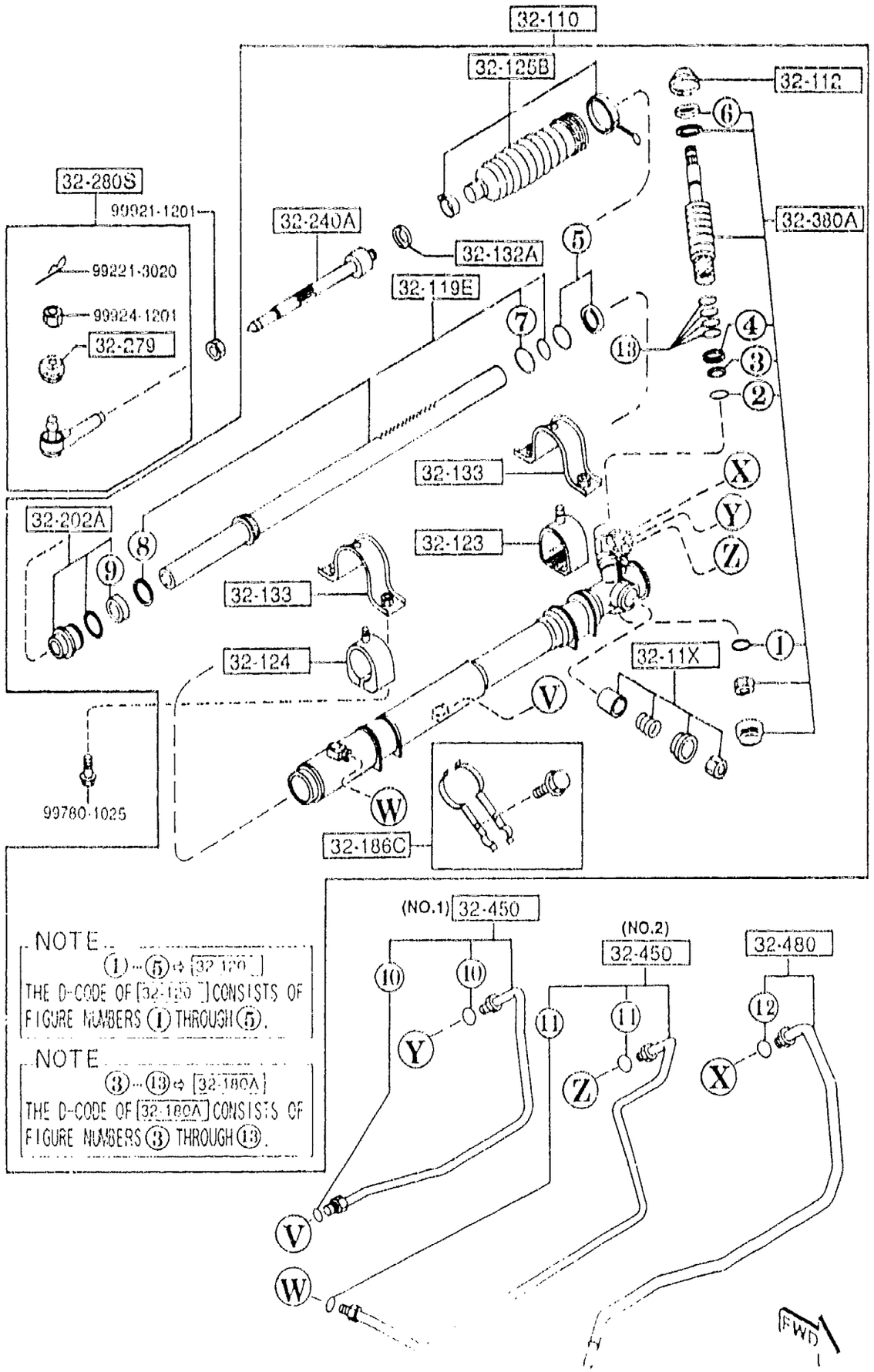

NOTE
①-⑤ ⇨ [32-120]
THE D-CODE OF [32-120] CONSISTS OF FIGURE NUMBERS ① THROUGH ⑤.

NOTE
③-⑬ ⇨ [32-180A]
THE D-CODE OF [32-180A] CONSISTS OF FIGURE NUMBERS ③ THROUGH ⑬.

PART NO.	QTY	MODEL/RESTRICTION	MODEL/RESTRICTION	MODEL/RESTRICTION	FROM-TO
32-240A		JOINT,BALL			
FD01-32-240A	2				
32-279		SEAL,DUST-BALL JOINT			
B455-32-279	2				
32-280S		JOINT SET,BALL			
8AB2-32-280	2				
32-380A		VALVE,ST. GEAR			
FD15-32-380	1				
32-450		PIPE,PRESSURE			
FD01-32-450	1	(ILLUST. NO.1)			
FD02-32-450	1	(ILLUST. NO.2)			
32-480		PIPE,RETURN			
FD02-32-480	1				

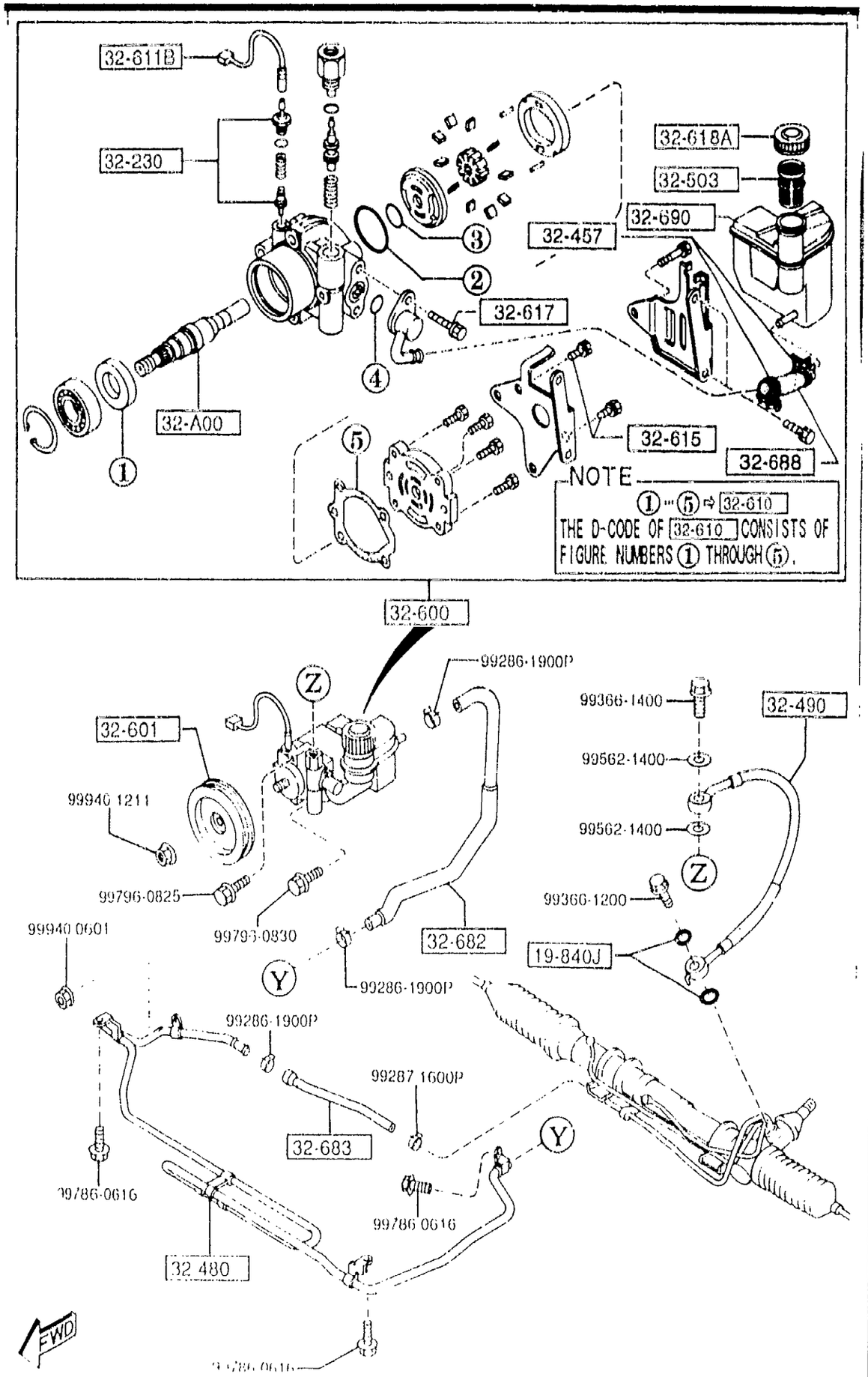

PART NO.	QTY	MODEL/RESTRICTION	MODEL/RESTRICTION	MODEL/RESTRICTION	FROM-TO
19-840J		RING,'O'			
99541-01401	2				
32-A00		SHAFT			
GA2A-32-607	1				
32-230		SENSOR,STEERING PRESSURE			
H380-32-230	1				
32-457		CLIP,HOSE			
FD01-32-457	1				
32-480		PIPE,RETURN			
FD01-32-480F	1				
32-490		HOSE,PRESSURE			
FD01-32-490D	1				
32-503		STRAINER			
BR71-32-503	1				
32-600		PUMP,VANE			
FD15-32-600A	1				
32-601		PULLEY,VANE PUMP			
FD01-32-620B	1				
32-610		SEAL KIT,VANE PUMP			
EA03-32-610	1				
32-611B		HARNESS			
FD01-32-611A	1				
32-615		KEY,VANE PUMP			
*FD01-32-615	1				
32-617		BOLT,VANE PUMP			
*FD01-32-617	1				
32-618A		CAP,VANE PUMP TANK			
0211-32-618A	1				

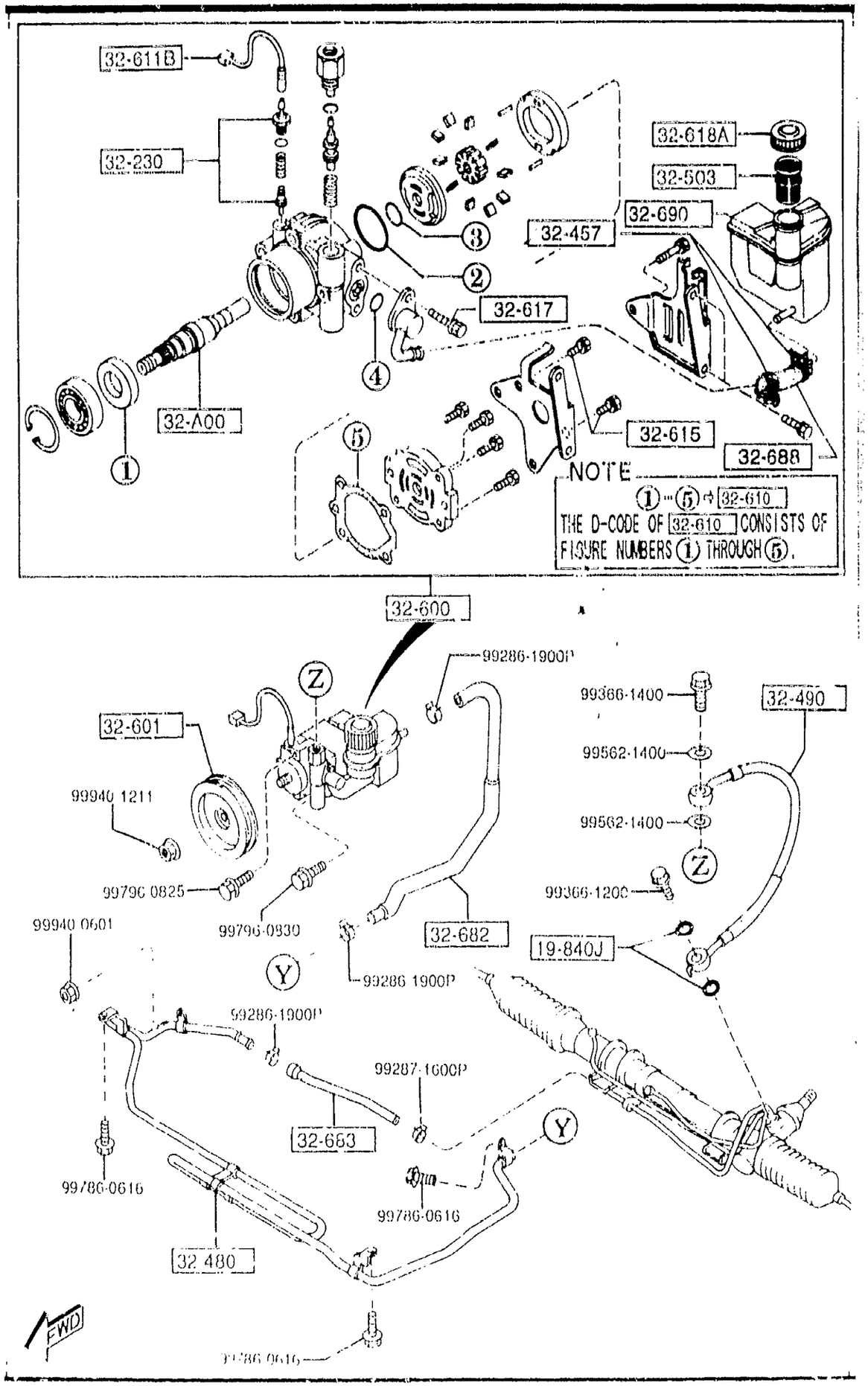

PART NO.	QTY	MODEL/RESTRICTION	MODEL/RESTRICTION	MODEL/RESTRICTION	FROM-TO
32-682		HOSE,RETURN			
FD01-32-682E	1				
32-683		CLAMP			
FD01-32-683A	1				
32-688		HOSE,SUCTION			
*FD01-32-688	1				
32-690		TANK,VANE PUMP			
FD01-32-690	1				

3300 FRONT AXLE

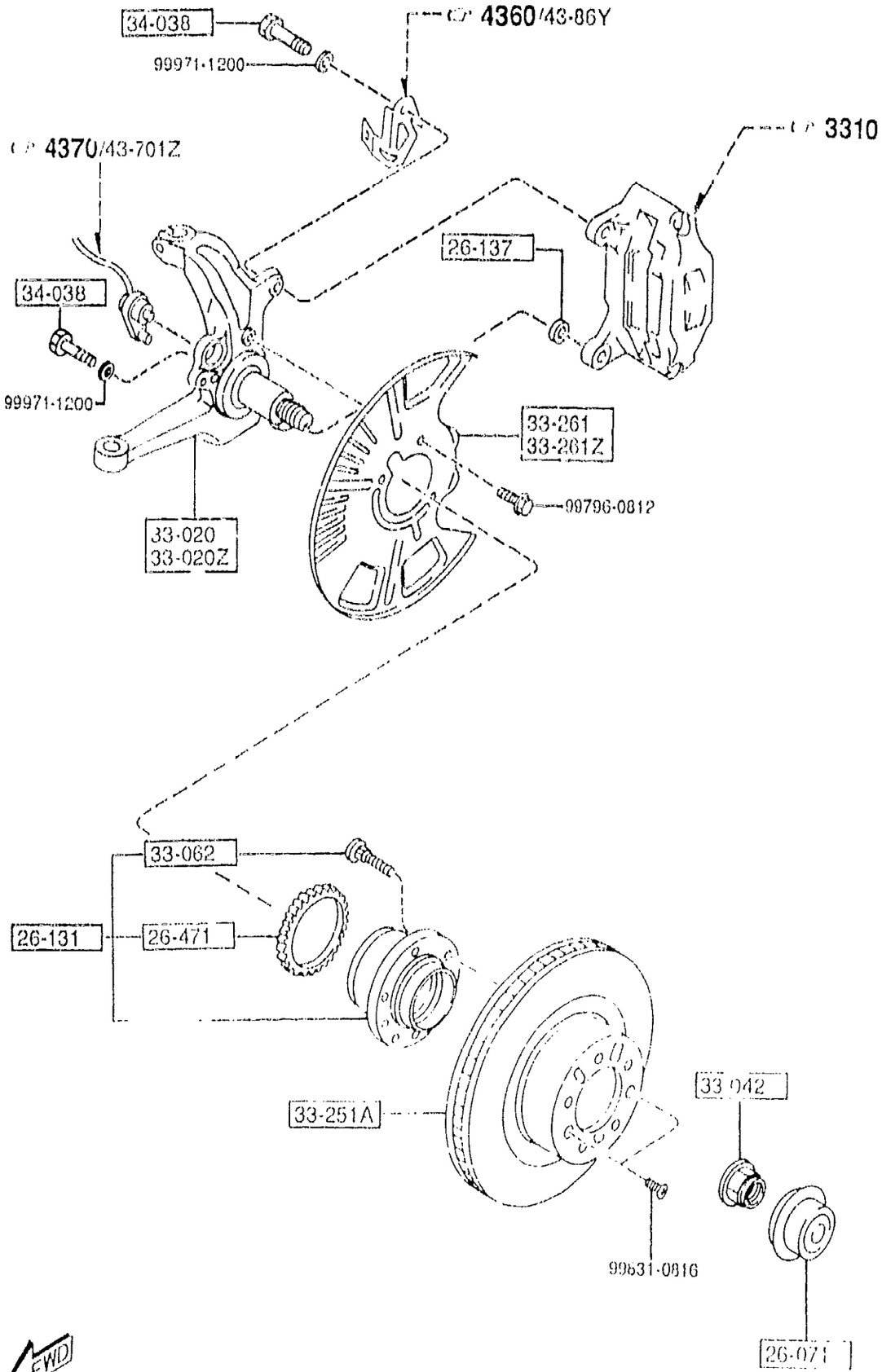

PART NO.	QTY	MODEL/RESTRICTION	MODEL/RESTRICTION	MODEL/RESTRICTION	FROM-TO
26-071		CAP,HUB			
GA2A-26-071	2				
26-131		BEARING & HUB			
GA5S-26-15X	2				
26-137		WASHER,PLAIN-LOWER ARM			
FB01-26-137	2				
26-471		ROTOR,SENSOR-RR A.B.S.			
GA5S-26-471	2				
33-020		KNUCKLE(R),STEERING			
FD15-33-021	1				
33-020Z		KNUCKLE(L),STEERING			
FD15-33-031	1				
33-042		NUT			
LA01-33-042B	2				
33-062		BOLT,HUB			
J00Y-33-062	10				
33-251A		PLATE,DISC			
FD01-33-25X	2				
33-261		COVER(R),DUST			
F124-33-261	1				
33-261Z		COVER(L),DUST			
F124-33-271	1				
34-038		BOLT,DAMPER-REAR			
LA01-34-038	4				

AUFA06

CAT. AUFA06-04

1997-01

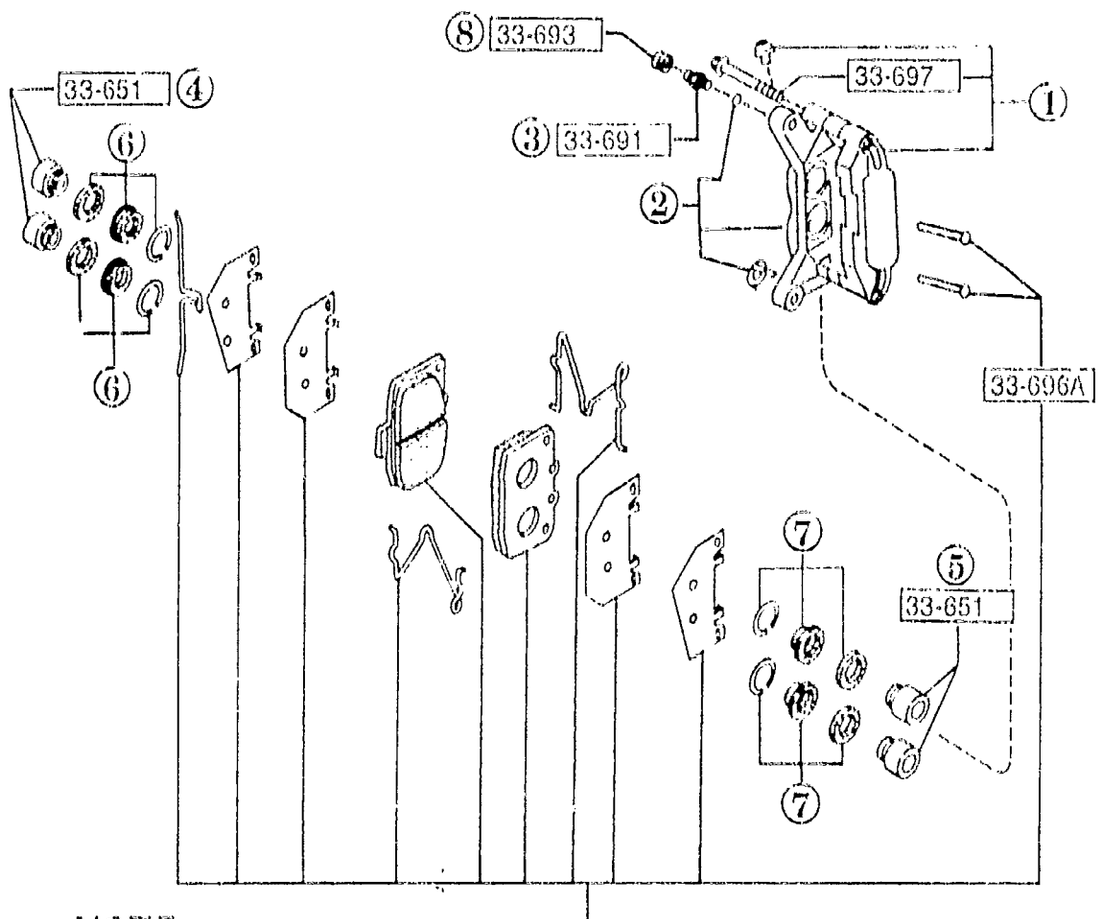

NOTE
①~⑧⇨ 33-98Z 33-99Z
THE D-CODE OF 33-98Z 33-99Z CONSISTS OF FIGURE NUMBERS ① THROUGH ⑧.

NOTE
⑥~⑧⇨ 49-240C
THE D-CODE OF 49-240C CONSISTS OF FIGURE NUMBERS ⑥ THROUGH ⑧.

NOTE
①~⑦⇨ 33 610 33-610Z
THE D-CODE OF 33-610 33-610Z CONSISTS OF FIGURE NUMBERS ① THROUGH ⑦.

THOUGH ILLUSTRATIONS OF D CODE 33 23Z AND 49-240C ARE FOR LEFT SIDE ONLY, QUANTITIES OF THESE D CODES IN THE TEXT ARE FOR ONE VEHICLE.

FWD

PART NO.	QTY	MODEL/RESTRICTION	MODEL/RESTRICTION	MODEL/RESTRICTION	FROM TO
33-23Z		PAD SET,FRT CALIPER			
FDZ3-33-23Z	1	NON ASBESTOS			
33-610		BODY & PISTON(R),CALIPER			
FD01-33-61XA	1				
33-610Z		BODY & PISTON(L),CALIPER			
FD01-33-71XA	1				
33-651		PISTON,CALIPER-FRT			
FB05-33-651A	8				
33-691		SCREW,BLEEDER			
B001-33-691	2				
33-693		CAP,RUBBER			
FB05-33-693	2				
33-696A		PIN,PAD-FRONT BRAKE			
FD01-33-696	4				
33-697		BOLT,BRIDGE-FRT BRAKE			
FD01-33-697	8				
33-98Z		CALIPER(R),PADLESS-FR			
FD13-33-98Z	1				
33-99Z		CALIPER(L),PADLESS FR			
FD13-33-99Z	1				
49-240C		SEAL KIT,CALIPER-FRT			
FB05-49-240	1				

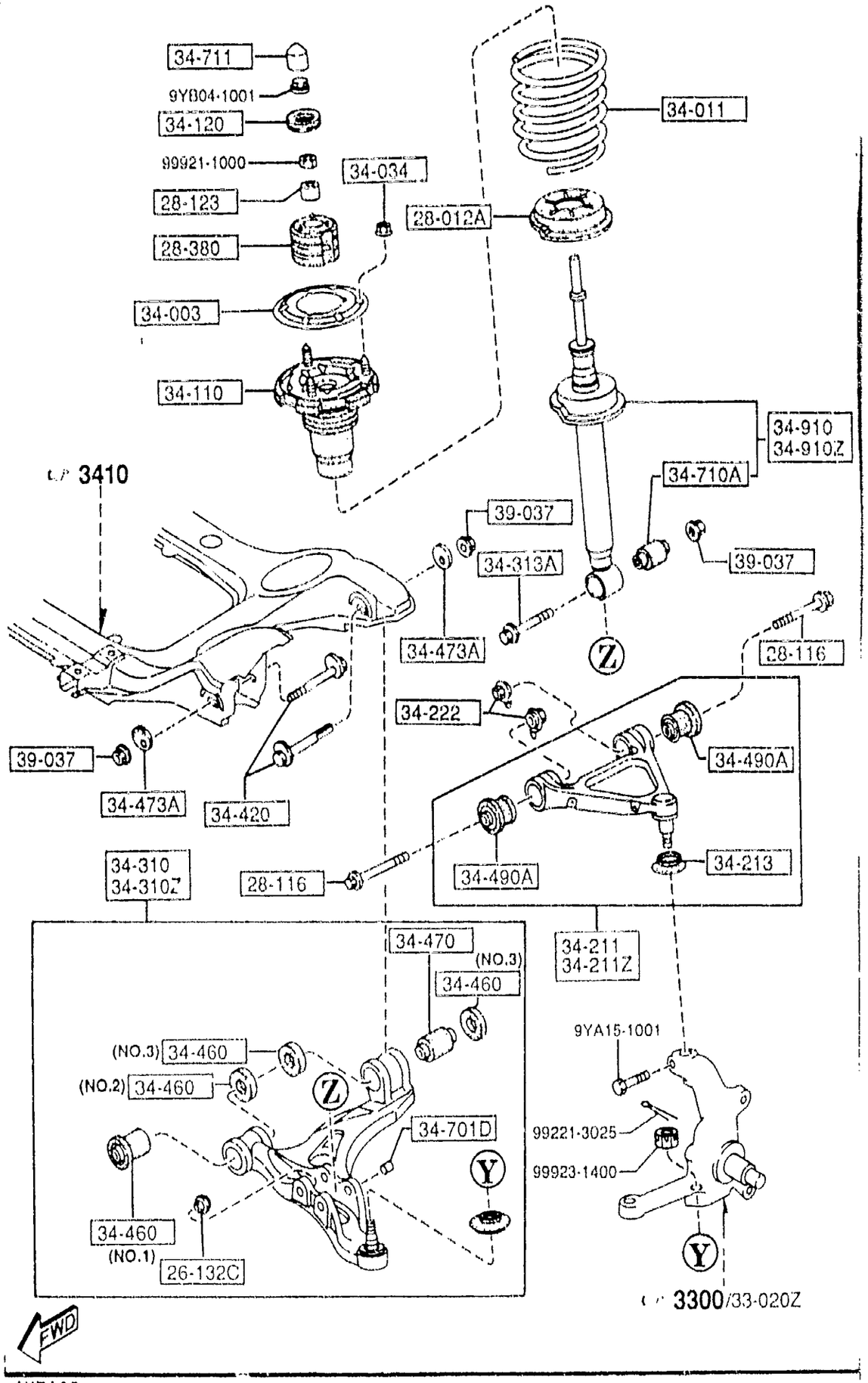

☞ 3410

☞ 3300/33-020Z

AUFA06

PART NO.	QTY	MODEL/RESTRICTION	MODEL/RESTRICTION	MODEL/RESTRICTION	FROM-TO
26-132C FB01-26-132	2	WASHER,SLEEVE-REAR BRAKE			
28-012A FD01-28-012	2	SHEET,RUBBER			
28-116 FD01-28-116	4	BOLT			
28-123 FD01-28-123A	2	SPACER			
28-380 FD15-28-380A	2	RUBBER,MOUNTING			
34-003 FD01-34-003	2	SHEET,FRT DAMPER			
34-011 FD01-34-011	2	((MT)>(W/O SUN ROOF)) ((MT)>(W/GLASS SUN ROOF))			
FD17-34-011	2	((MT)>(W/STEEL SUN ROOF)) (AT)			
34-034 H380-34-034A	6	NUT,FLANGE			
34-110 FD15-34-110B	2	BUMPER,BOUND			
34-120 FD01-34-120	2	STOPPER			
34-211 FD15-34-200	1	ARM(R),UPPER			
34-211Z FD15-34-250	1	ARM(L),UPPER			

3400 -2 FRONT SUSPENSION MECHANISMS

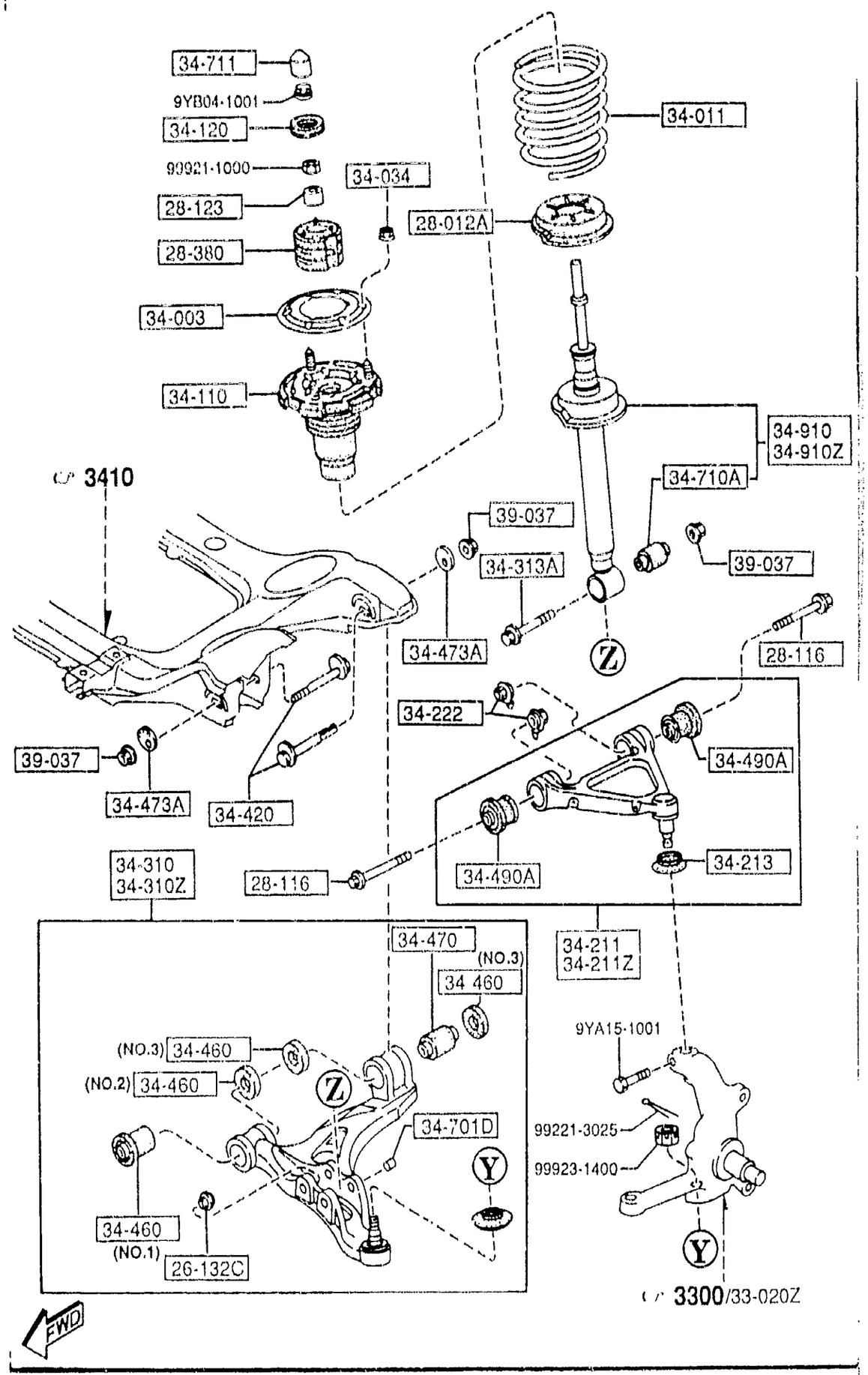

AUFA06

PART NO.	QTY	MODEL/RESTRICTION	MODEL/RESTRICTION	MODEL/RESTRICTION	FROM-TO
34-213		BOOT,BALL JOINT-UP.ARM			
FD01-34-213	2				
34-222		NUT			
8871-34-222	4				
34-310		ARM(R),LOWER			
FD15-34-300	1	(HARD SUSP)			
F123-34-300A	1	(NOR. SUSP)			
34-310Z		ARM(L),LOWER			
FD15-34-350	1	(HARD SUSP)			
F123-34-350A	1	(NOR. SUSP)			
34-313A		BOLT			
H260-34-313	2				
34-420		BOLT,ADJUST			
FD01-34-420	4				
34-460		BUSH,RUBBER-LWR ARM			
FD01-34-460B	2	(ILLUST. NO.1) (HARD SUSP)			
F123-34-460A	2	(ILLUST. NO.1) (NOR. SUSP)			
FD01-34-461	2	(ILLUST. NO.2)			
FD01-34-471A	4	(ILLUST. NO.3)			
34-470		BUSHING,RUBBER-FRT			
FD01-34-470A	2				
34-473A		PLATE,CAM			
FD01-34-473	4				
34-490A		BUSHING,RUBBER			
FD01-34-480A	4				
34-701D		SLEEVE			
FD01-34-701B	2				

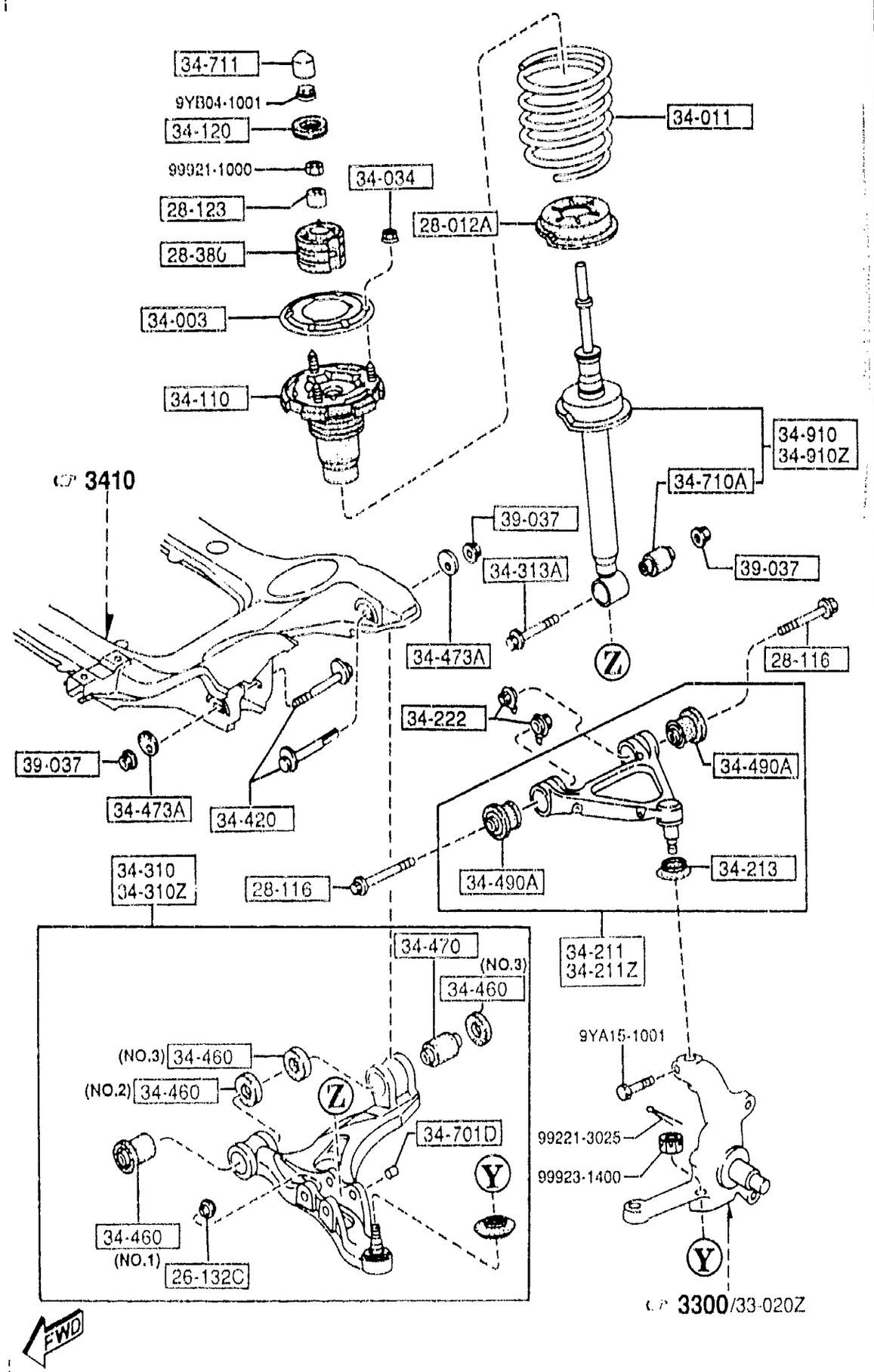

PART NO.	QTY	MODEL/RESTRICTION	MODEL/RESTRICTION	MODEL/RESTRICTION	FROM-TO
34-710A		BUSHING,DAMPER-LOWER			
FD01-34-710A	2	(HARD SUSP)			
F123-34-710A	2	(NOR. SUSP)			
34-711		CAP			
FD01-34-711A	2				
34-910		DAMPER(R),FRONT			
FD16-34-700A	1	(HARD SUSP)			
F123-34-700A	1	(NOR. SUSP)			
34-910Z		DAMPER(L),FRONT			
FD16-34-900A	1	(HARD SUSP)			
F123-34-900A	1	(NOR. SUSP)			
39-037		NUT			
B001-39-037B	10				

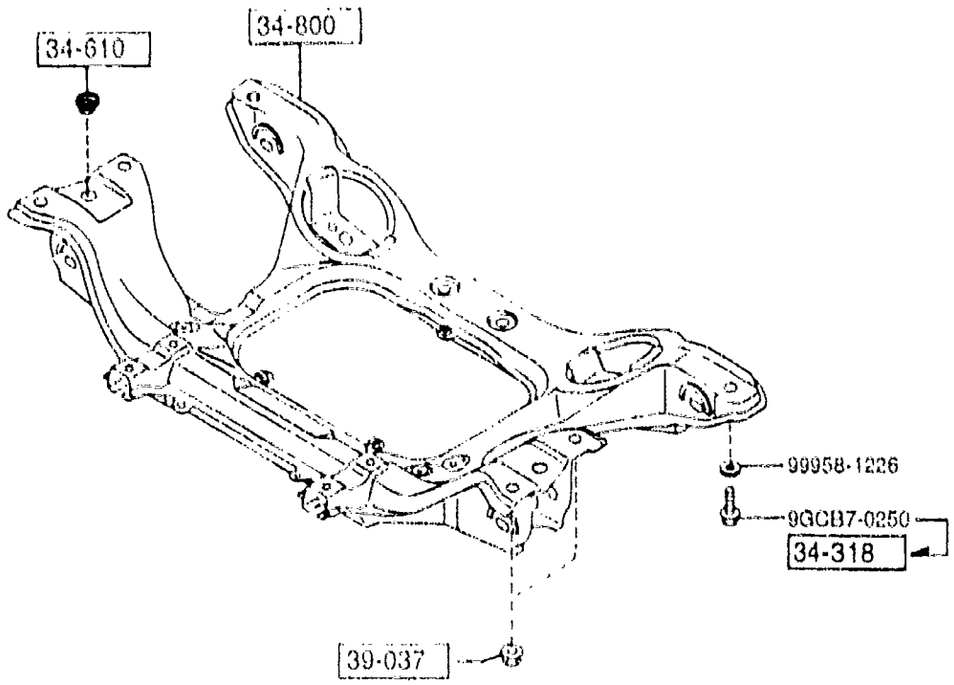

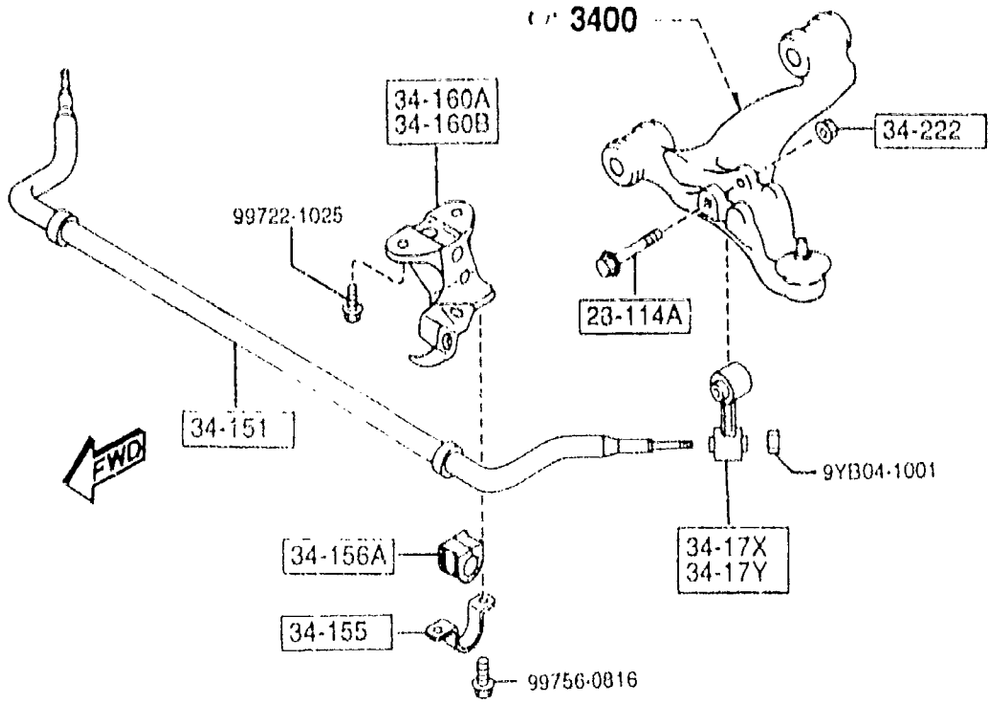

3410 -1 * CROSSMEMBER & STABILIZER

PART NO.	QTY	MODEL/RESTRICTION	MODEL/RESTRICTION	MODEL/RESTRICTION	FROM-TO
28-114A FD01-28-114	2	BOLT			
34-151 FD01-34-151A	1	STABILIZER,FRONT			
34-155 FD01-34-155	2	PLATE,STABILIZER			
34-156A FD01-34-156	2	RUBBER,STAB -FRT			
34-160A FD01-34-160D	1	BRACKET,STABILIZER (FOR RIGHT)			
34-160B FD01-34-180C	1	BRACKET,STABILIZER (FOR LEFT)			
34-17X FD01-34-17X	1	LINK(R),FRONT STABILIZER			
34-17Y FD01-34-19X	1	LINK(L),FRONT STABILIZER			
34-222 88/1-34-222	2	NUT			
34-318 H380-34-318A	2	BOLT,FLANGE-ST. KNUCKLE			5801-
34-610 FD01-34-610A	2	RUBBER,MOUNTING			
34-800 FD01-34-800H	1	MEMBER,CROSS			
39-037 B001-39-037B	4	NUT			

5801 FD333 -400230

3700 -1 TIRES & JACK

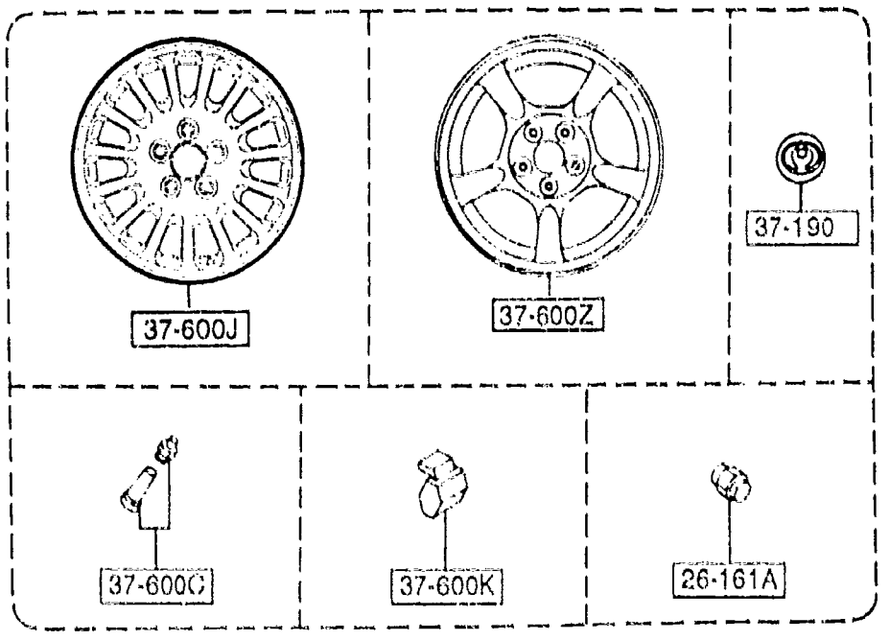

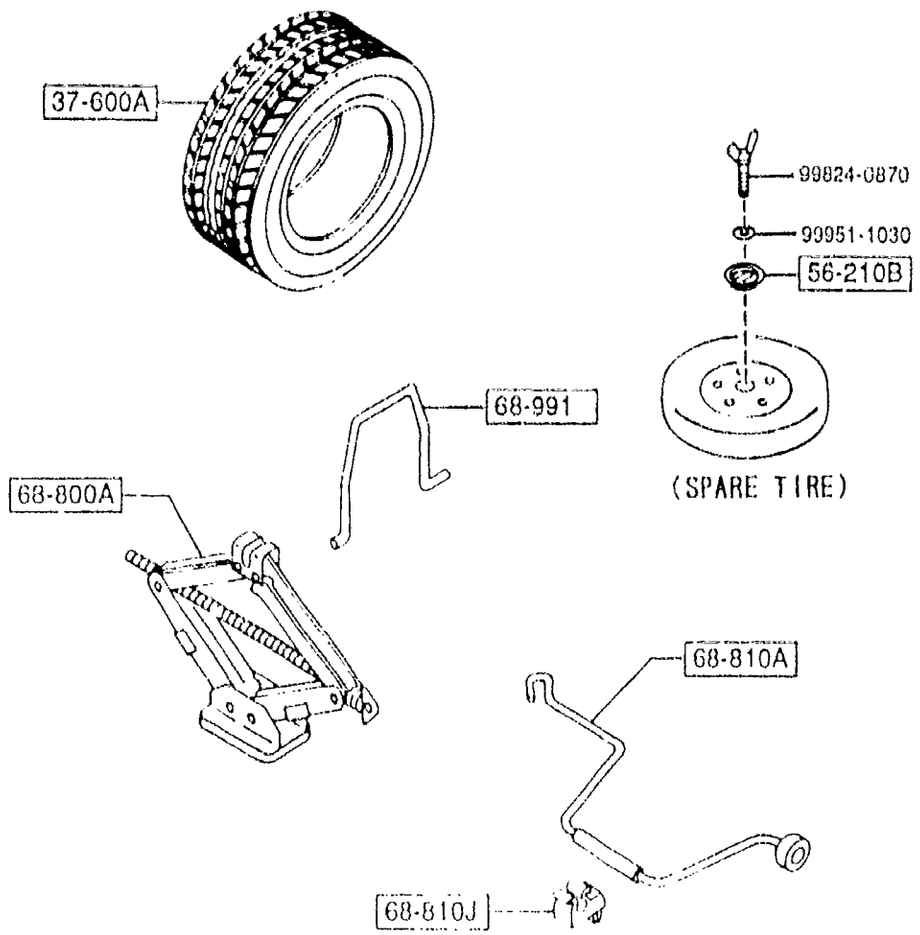

PART NO.	QTY	MODEL/RESTRICTION	MODEL/RESTRICTION	MODEL/RESTRICTION	FROM-TO
26-161A		NUT,HUB			
B002-37-160	20	PLATED			
37-190		CAP,CENTER			
FD01-37-191B	4				
37-600A		TIRE			
90620-17636	1	T135/70D16 BS			
90622-65726	4	225/50R16 (225/50VR16 GOOD YEAR)			
90623-25726	4	225/50R16 (225/50VR16 YOKOHAMA)			
90623-35726	4	225/50R16 (225/50VR16 DUNLOP)			
37-600C		VALVE,AIR			
99636-04130	4	TR413			
37-600J		WHEEL DISK-TEMPORARY			
99651-94060	1	4TX16 P-114/0=40			
37-600K		WEIGHT,DISC WHEEL-ALUMI			
99655-90005	4	5G FOR 1-PIECE WHL			
99655-90010	4	10G FOR 1-PIECE WHL			
99655-90015	4	15G FOR 1-PIECE WHL			
99655-90020	4	20G FOR 1-PIECE WHL			
99655-90025	4	25G FOR 1-PIECE WHL			
99655-90030	4	30G FOR 1-PIECE WHL			
99655-90035	4	35G FOR 1-PIECE WHL			
99655-90040	4	40G FOR 1-PIECE WHL			
99655-90045	4	45G FOR 1-PIECE WHL			

3700 -2 * TIRES & JACK

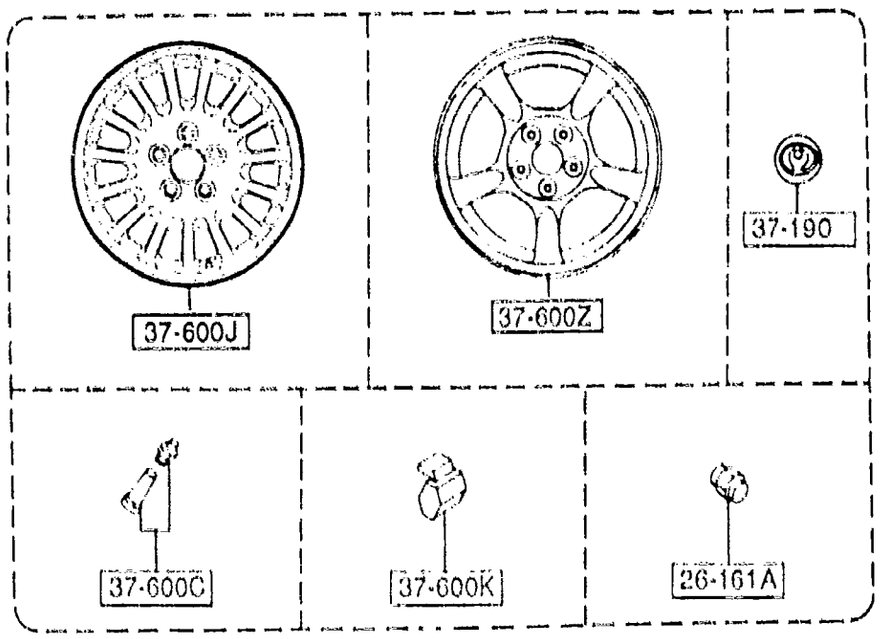

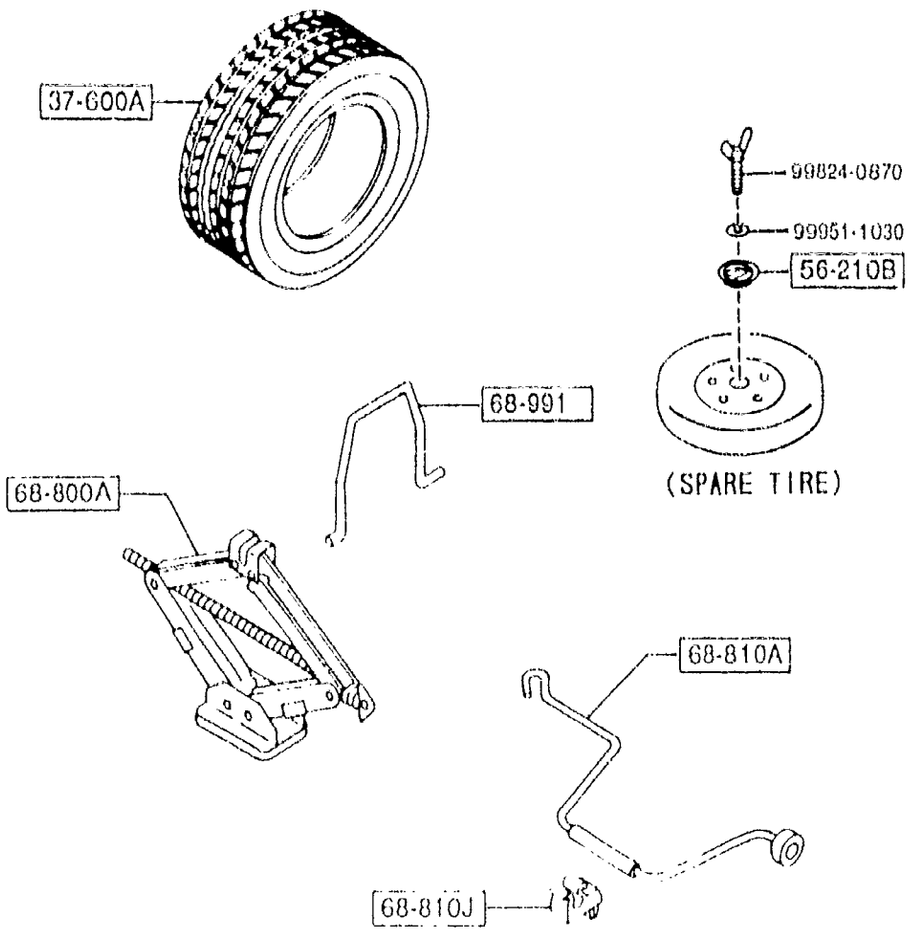

PART NO.	QTY	MODEL/RESTRICTION	MODEL/RESTRICTION	MODEL/RESTRICTION	FROM TO
CONT'D					
99655-90050	4	50G FOR 1-PIECE WHL			
99655-90055	4	55G FOR 1-PIECE WHL			
99655-90060	4	60G FOR 1-PIECE WHL			
+----------+					
| 37-600Z |		WHEEL,DISC-ALUMI.			
+----------+					
99650-28060	4	8JJX16 P=114/0=50			
99650-58060	4	8JJX16 P=114/0=50			
+----------+					
| 56-210B |		CLAMP,SPARE TIRE			
+----------+					
FB01-56-971	1				
+----------+					
| 68-800A |		JACK			
+----------+					
FD01-37-790A	1				
+----------+					
| 68-810A |		HANDLE,JACK			
+----------+					
FD01-37-810	1				
+----------+					
| 68-810J |		HOLDER,JACK HANDLE			
+----------+					
FD01-56-171A	1				
+----------+					
| 68-991 |		WIRE			
+----------+					
FD01-56-172	1				

3900 ENGINE & T/MISSION MOUNTINGS

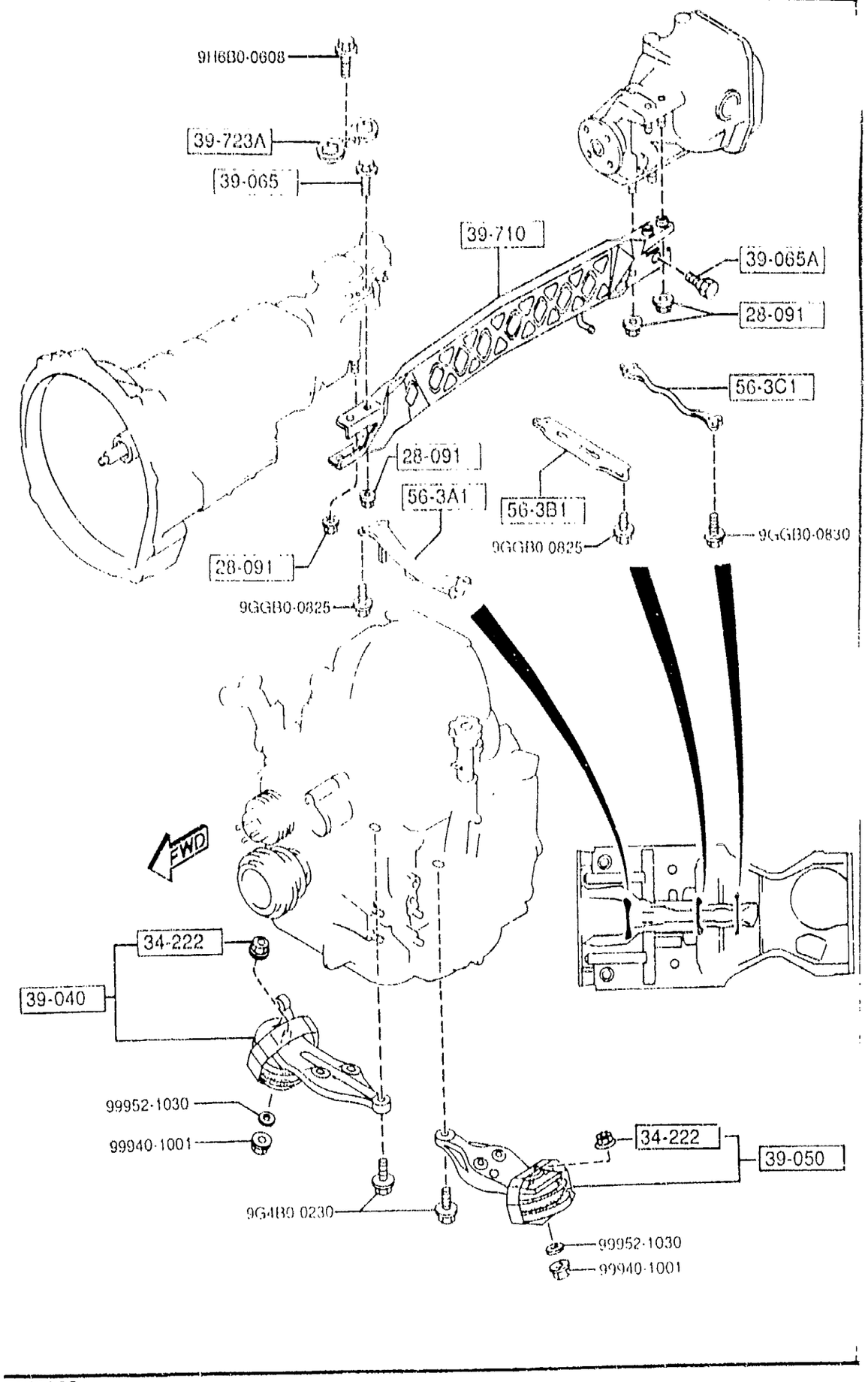

PART NO.	QTY	MODEL/RESTRICTION	MODEL/RESTRICTION	MODEL/RESTRICTION	FROM-TO
28-091		NUT			
FB01-28-091A	8				
34-222		NUT			
8871-34-222	2				
39-040		RUBBER(R),ENGINE MT.			
FD01-39-040C	1				-4A01
A (FD01-39-040D)					
FD01-39-040D	1				4A01-
39-050		RUBBER(L),ENGINE MT.			
FD01-39-050A	1				-5301
A (FD31-39-050)					
FD31-39-050	1				5301-5C06
A (FD31-39-050A)					
*FD31-39-050A	1				5C06-
39-065		BOLT			
FD01-39-065	2				
39-065A		BOLT			
FD01-39-066	1				
39-710		FRAME,POWER PLANT			
FD01-39-710C	1				-5C03
A (FD01-39-710D)					
*FD01-39-710D	1				5C03-
39-723A		STOPPER			
FD01-39-723	1				
56-3A1		MEMBER'A',TUNNEL			
FD01-56-3A1	1				
56-3B1		MEMBER'B',TUNNEL			
FD01-56-3B1	1				
56-3C1		MEMBER'C',TUNNEL			
FD01-56-3C1D	1				

4A01 FD333 -400014
5301 FD333 -400027
5C03 FD333 -400346
5C06 FD333 -400368

4000 EXHAUST SYSTEM

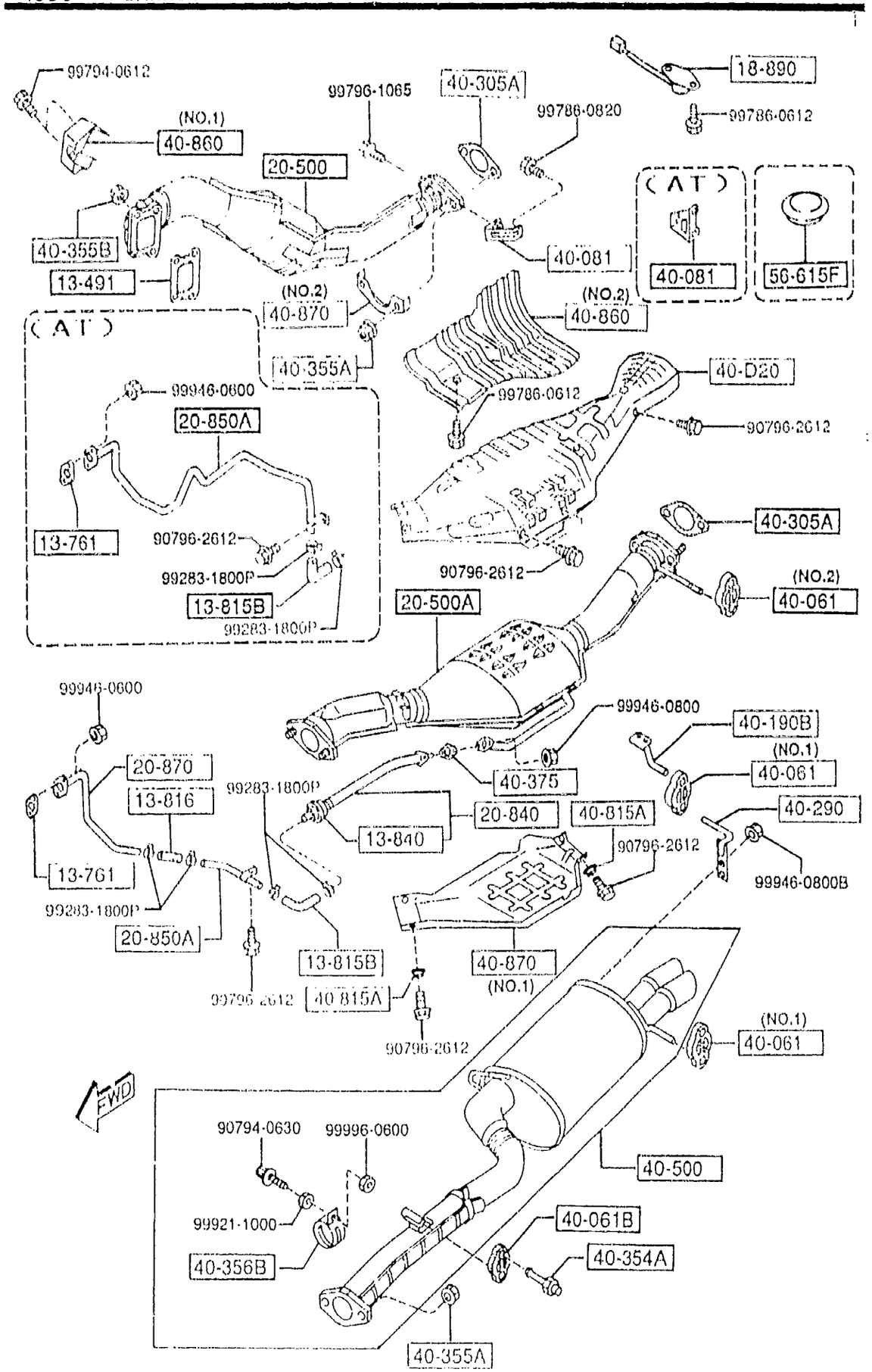

PART NO.	QTY	MODEL/RESTRICTION	MODEL/RESTRICTION	MODEL/RESTRICTION	FROM-TO
13-491		GASKET,JOINT PIPE			
N3A1-13-491	1				
13-761		GASKET			
N386-13-535	1	NON ASBESTOS			
13-815B		HOSE,AIR			
N3A1-13-815A	1	(AT)			
N3A7-13-815	1	(MT)			
13-816		HOSE,AIR			
N3A1-13-816A	1	(MT)			
13-840		VALVE,CHECK			
N3A2-13-840	1				
18-890		SWITCH,THERMO			
N3A1-18-890	1				
20-500		CONVERTER,CATALYST			
N3D8-20-500	1	(MT)			
N3D9-20-500	1	(AT)			
20-500A		CATALYST,THREE WAY			
N3D8-20-600	1	(MT)			
N3D9-20-600	1	(AT)			
20-840		PIPE,AIR			
N3A2-20-840B	1				
20-850A		PIPE,AIR			
N3A1-20-850A	1	(MT)			
N3C2-20-850	1	(AT)			
20-870		PIPE,AIR			
N3B7-20-870B	1	(MT)			
40-D20		INSULATOR,CONVERTER			
N3A1-40-D20F	1				

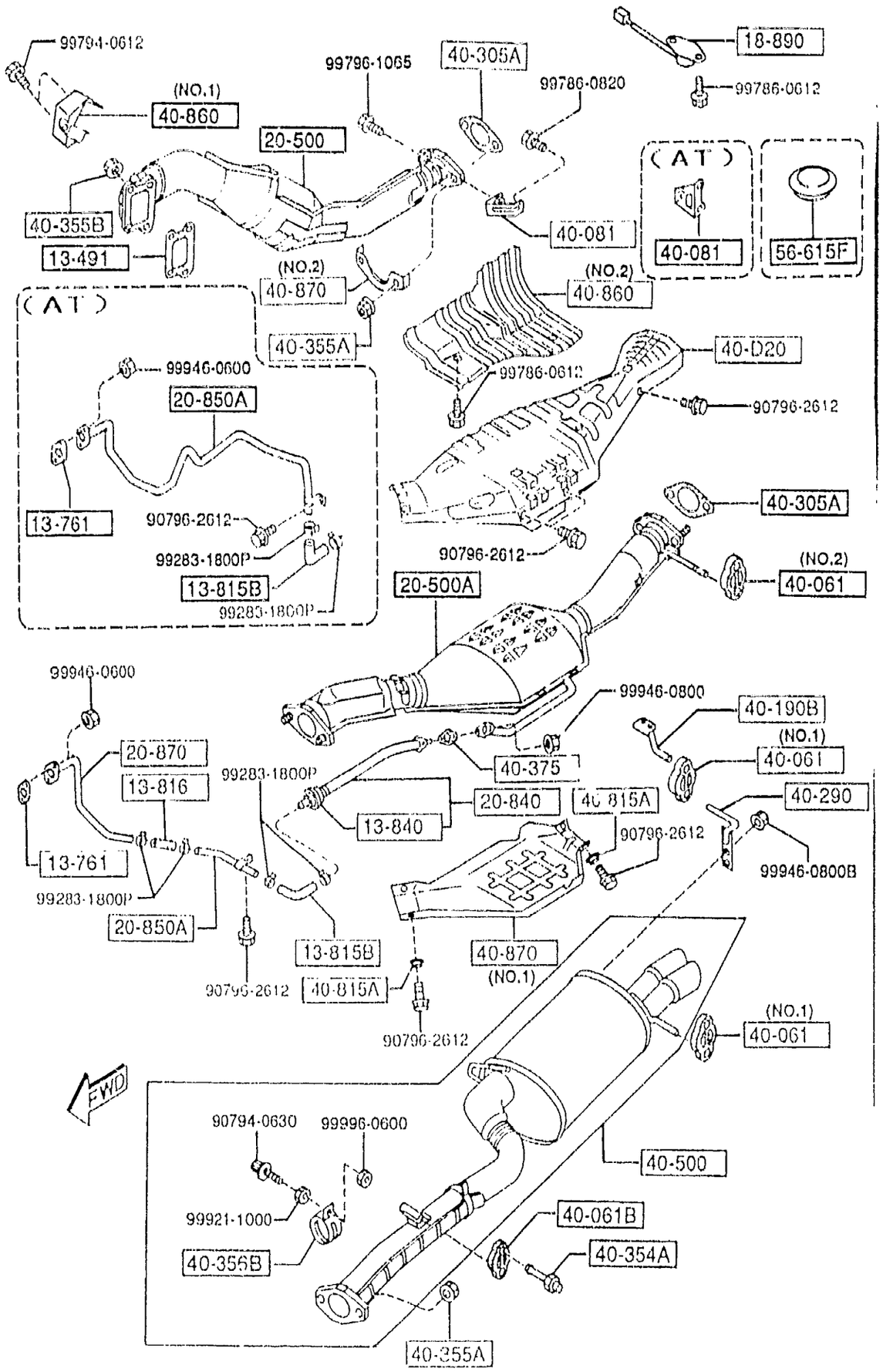

PART NO.	QTY	MODEL/RESTRICTION	MODEL/RESTRICTION	MODEL/RESTRICTION	FROM-TO
40-061		HANGER,SILENCER			
N3A2-40-061A	1	(ILLUST. NO.2)			
N3A1-40-061D	2	(ILLUST. NO.1)			-5801
A (N3A1-40-061E)					
N3A1-40-061E	2	(ILLUST. NO.1)			5801-
40-061B		RUBBER,HANGER			
FE20-40-061	1				
40-081		BRACKET,HANGER			
N3A1-40-080A	1	(MT)			
N3A2-40-080	1	(AT)			
40-190B		BRACKET,HANGER			
N3A1-40-190	1				
40-290		HANGER			
N3A1-40-290	1				
40-305A		GASKET			
RF36-40-305	2	NON ASBESTOS			
40-354A		BOLT			
N3A1-40-354	1				
40-355A		NUT			
JE11-40-355	4				
40-355B		NUT			
JE10-40-355	4				
40-356B		BAND			
N3A8-40-356	1				
40-375		GASKET			
N378-40-307	1				
40-500		SILENCER,MAIN			
N3C1-40-100A	1				

5801 FD333 -400230

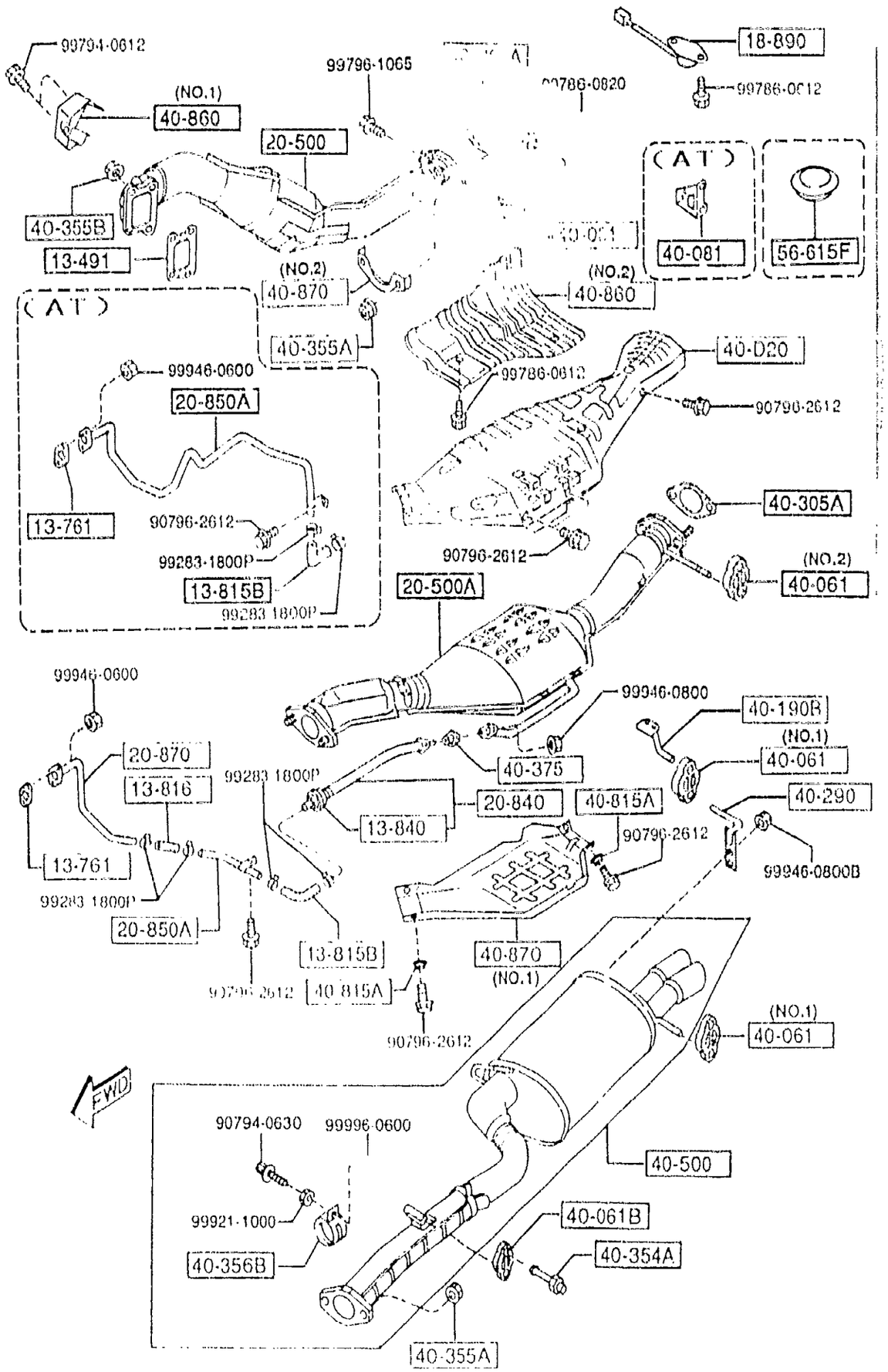

PART NO.	QTY	MODEL/RESTRICTION	MODEL/RESTRICTION	MODEL/RESTRICTION	FROM-TO
40-815A		WASHER			
8545-40-815	2				
40-860		PROTECTOR,CONVERTER			
N3C1-40-860	1	(ILLUST. NO.1)			
N3A1-40-865A	1	(ILLUST. NO.2)			
40-870		PROTECTOR			
N3A1-40-870B	1	(ILLUST. NO.1)			
N3A1-40-872	1	(ILLUST. NO.2)			
56-615F		PLUG,DRAIN			
0208-56-615	1				

4140 -1 CLUTCH RELEASE & MASTER CYLINDERS (MANUAL TRANSMISSION)

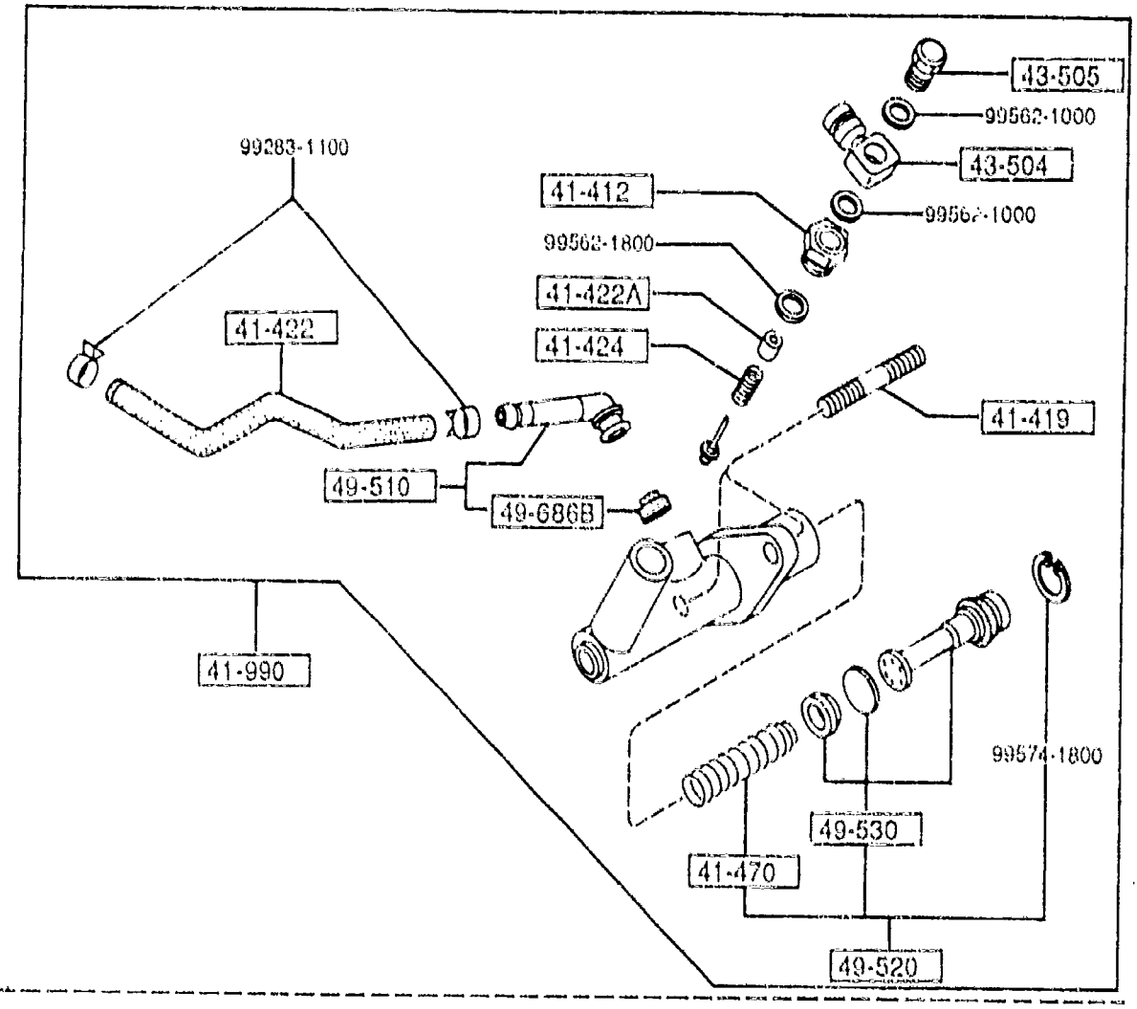

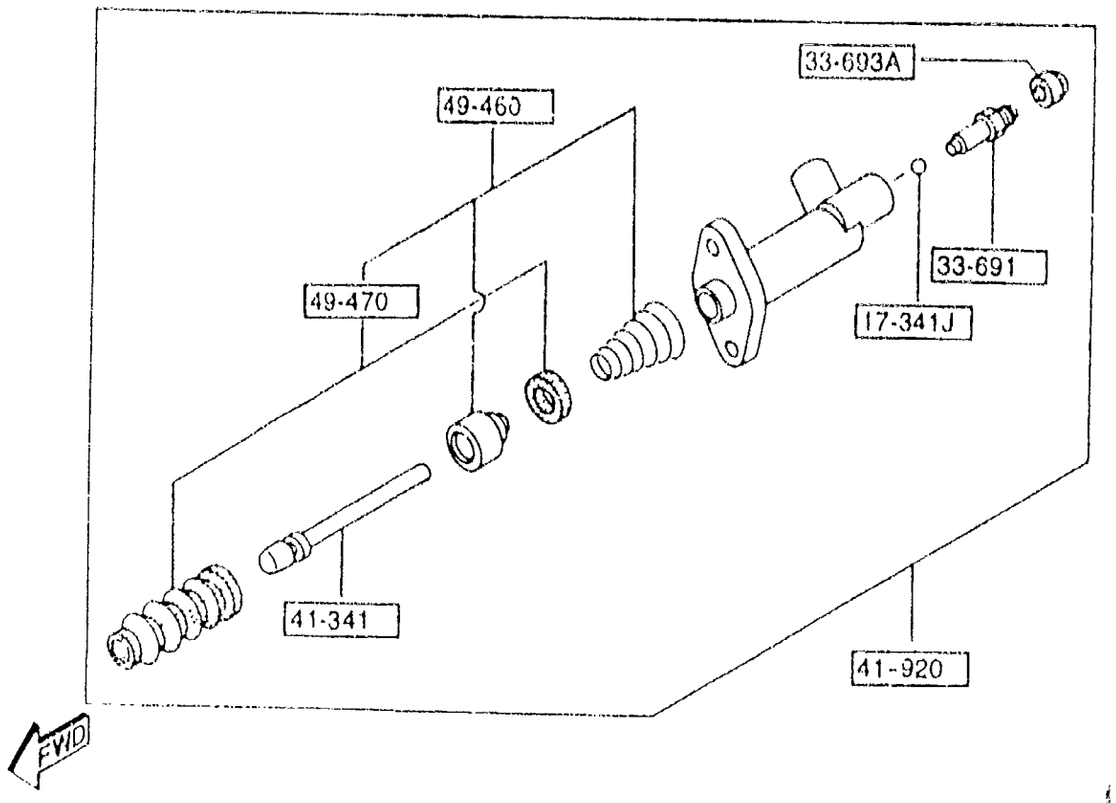

PART NO.	QTY	MODEL/RESTRICTION	MODEL/RESTRICTION	MODEL/RESTRICTION	FROM TO
17-341J 99611-1500	1	BALL,STEEL			
33-691 0259-33-691	1	SCREW,BLEEDER			
33-693A 0259-33-693	1	CAP,BLEEDER SCREW			
41-341 H266-41-341	1	ROD,PUSH			
41-412 G091-41-412	1	BOLT,JOINT			
41-419 FD01-41-419	2	STUD,CLUTCH CYL.			
41-422 F100-41-421	1	HOSE,RESERVE			
41-422A 0813-41-422D	1	PISTON,O.W.VALVE			
41-424 H005-41-424	1	SPRING,O.W.VALVE			
41-470 B312-41-470	1	SPRING			
41-920 FD01-41-920	1	CYL.,CLUTCH RELEASE			
41-990 F100-41-990B	1	CYL.,CLUTCH MASTER			
43-504 W023-43-504	1	JOINT,PIPE			
43-505 W023-43-505	1	BOLT,CONNECTOR			

4140 -2 * CLUTCH RELEASE & MASTER CYLINDERS (MANUAL TRANSMISSION)

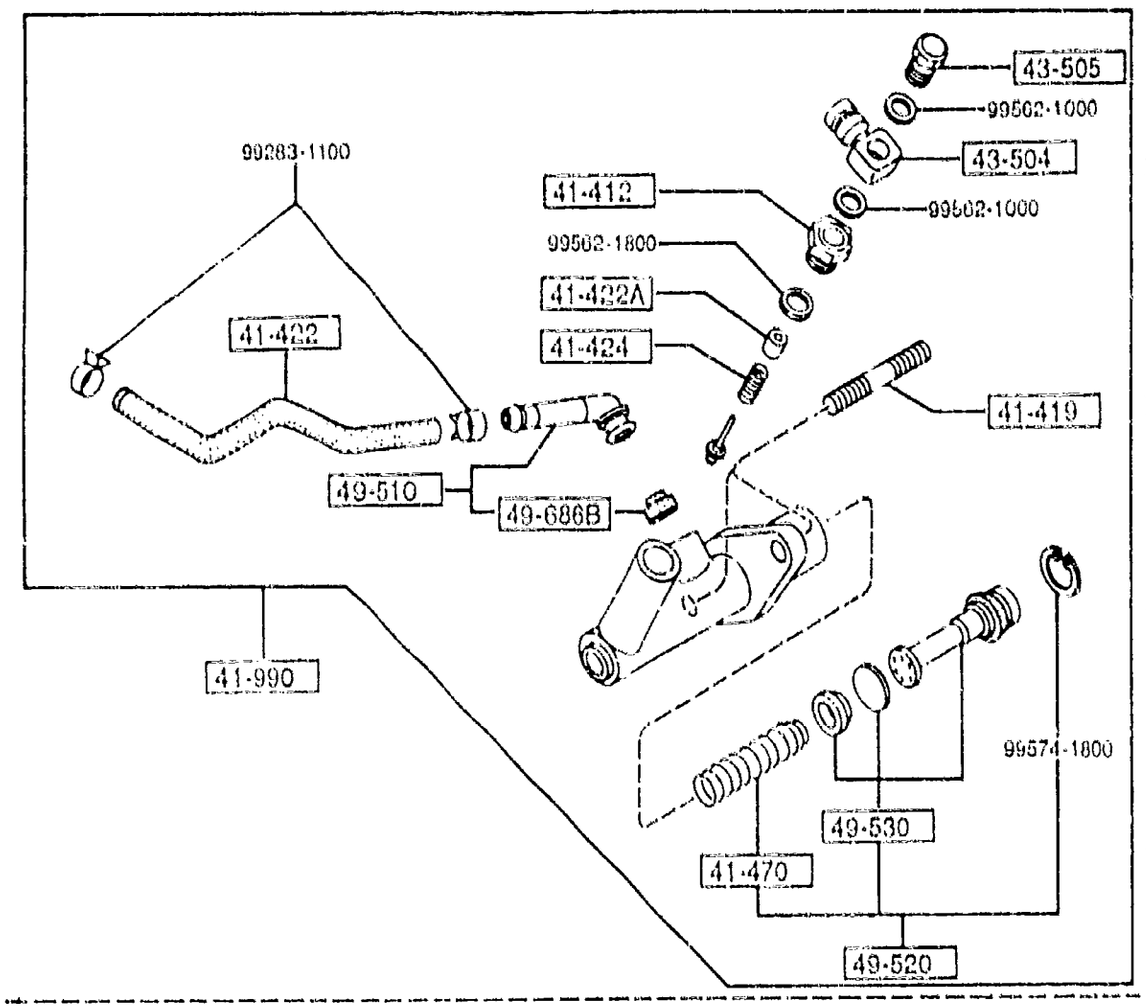

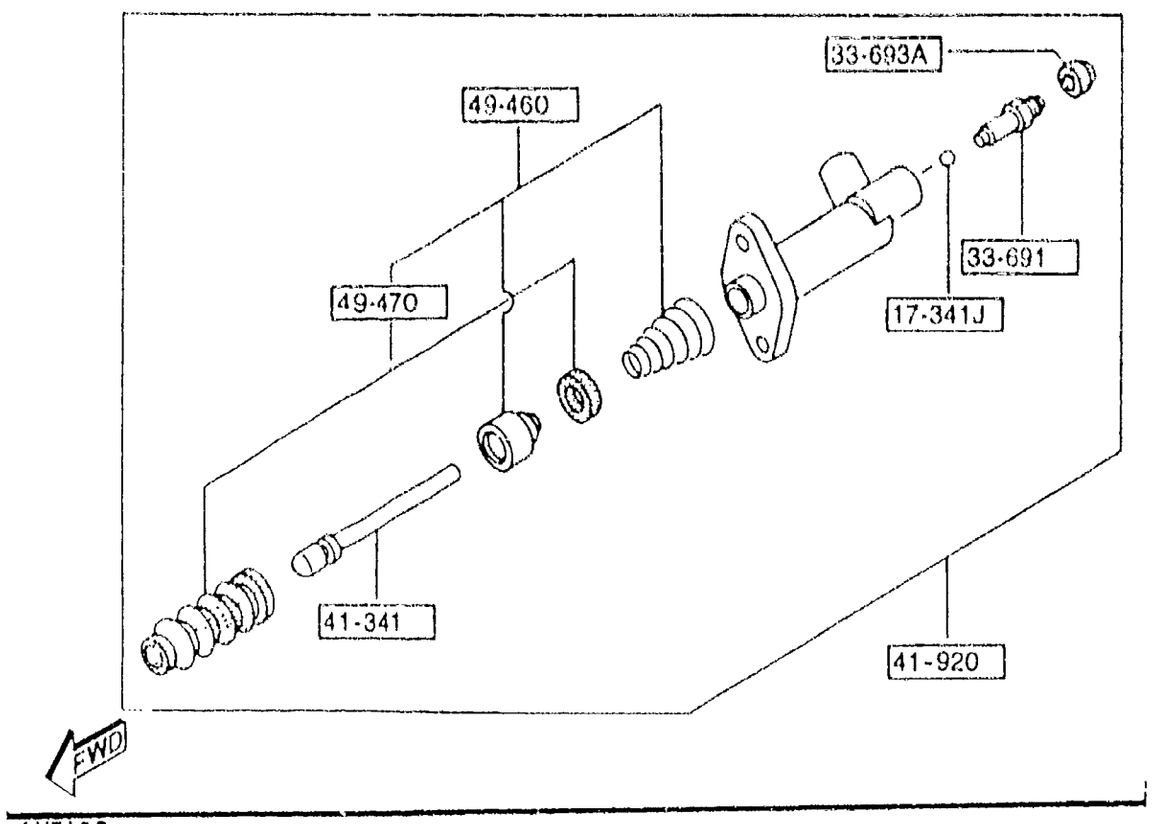

PART NO.	QTY	MODEL/RESTRICTION	MODEL/RESTRICTION	MODEL/RESTRICTION	FROM-TO
49-460		PARTS KIT,INNER			
FD01-49-460	1				
49-470		SEAL KIT			
FD01-49-470	1				
49-510		BUSH SET			
W001-49-510	1				
49-520		PARTS KIT,INN.-CLUTCH			
B312-41-52Z	1				
49-530		SEAL KIT			
B312-41-53Z	1				
49-686B		BUSH,ELBOW JOINT			
0839-49-686A	1				

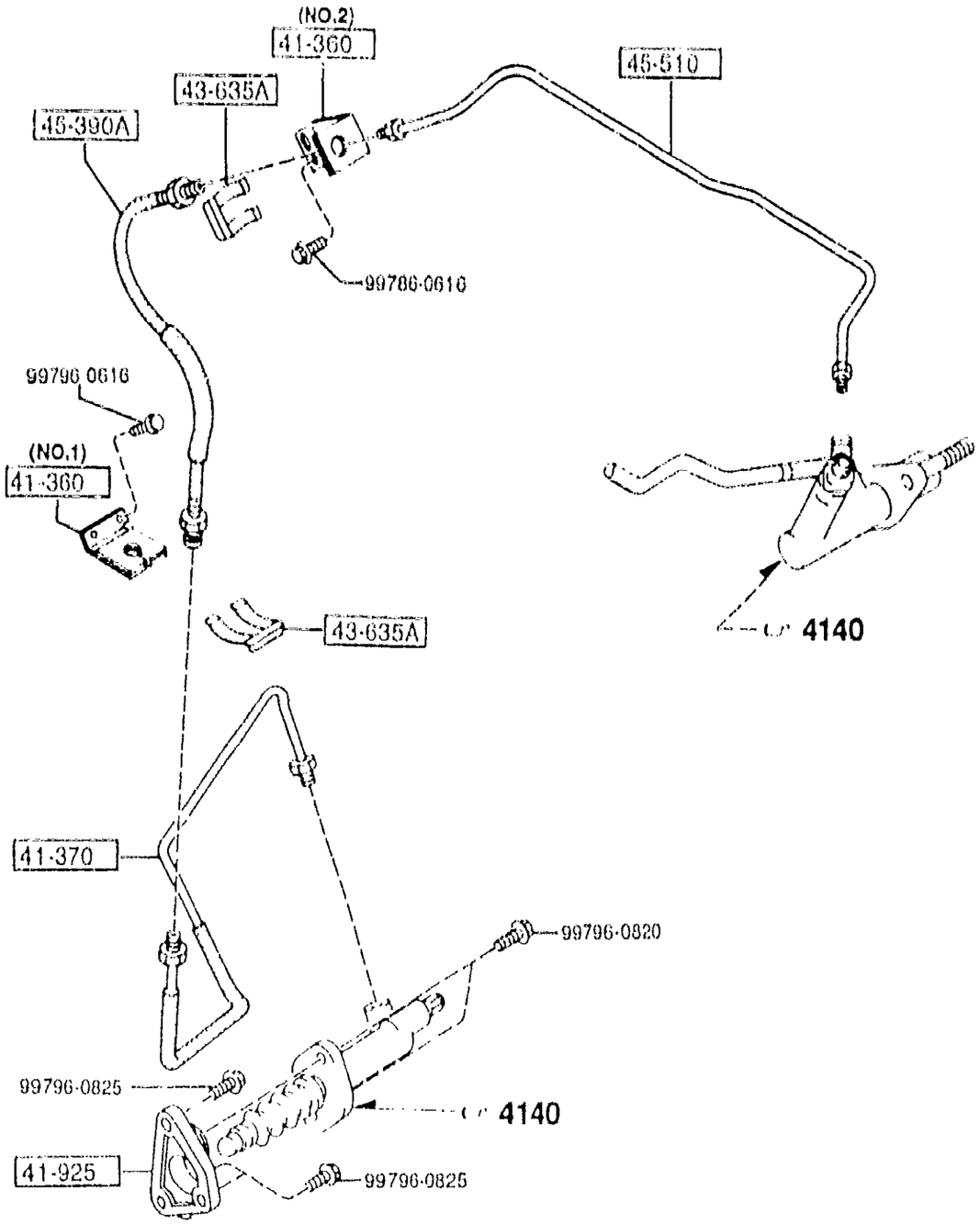

AUFA06

4145 -1 * CLUTCH PIPINGS (MANUAL TRANSMISSION)

PART NO.	QTY	MODEL/RESTRICTION	MODEL/RESTRICTION	MODEL/RESTRICTION	FROM-TO
41-360		HOLDER,CLUTCH			
FD03-41-370	1	(ILLUST. NO.1)			
F100-41-370	1	(ILLUST. NO.2)			
41-370		PIPE,CLUTCH			
FD01-41-360A	1				
41-925		SUPPORT,CLUTCH RELEASE			
N315-16-921	1				
43-635A		CLIP,FLEXIBLE HOSE			
0136-43-635	2				
45-390A		HOSE,CLUTCH FLEXIBLE			
HE01-45-540	1				
45-510		PIPE,CLUTCH			
FD01-45-510D	1				

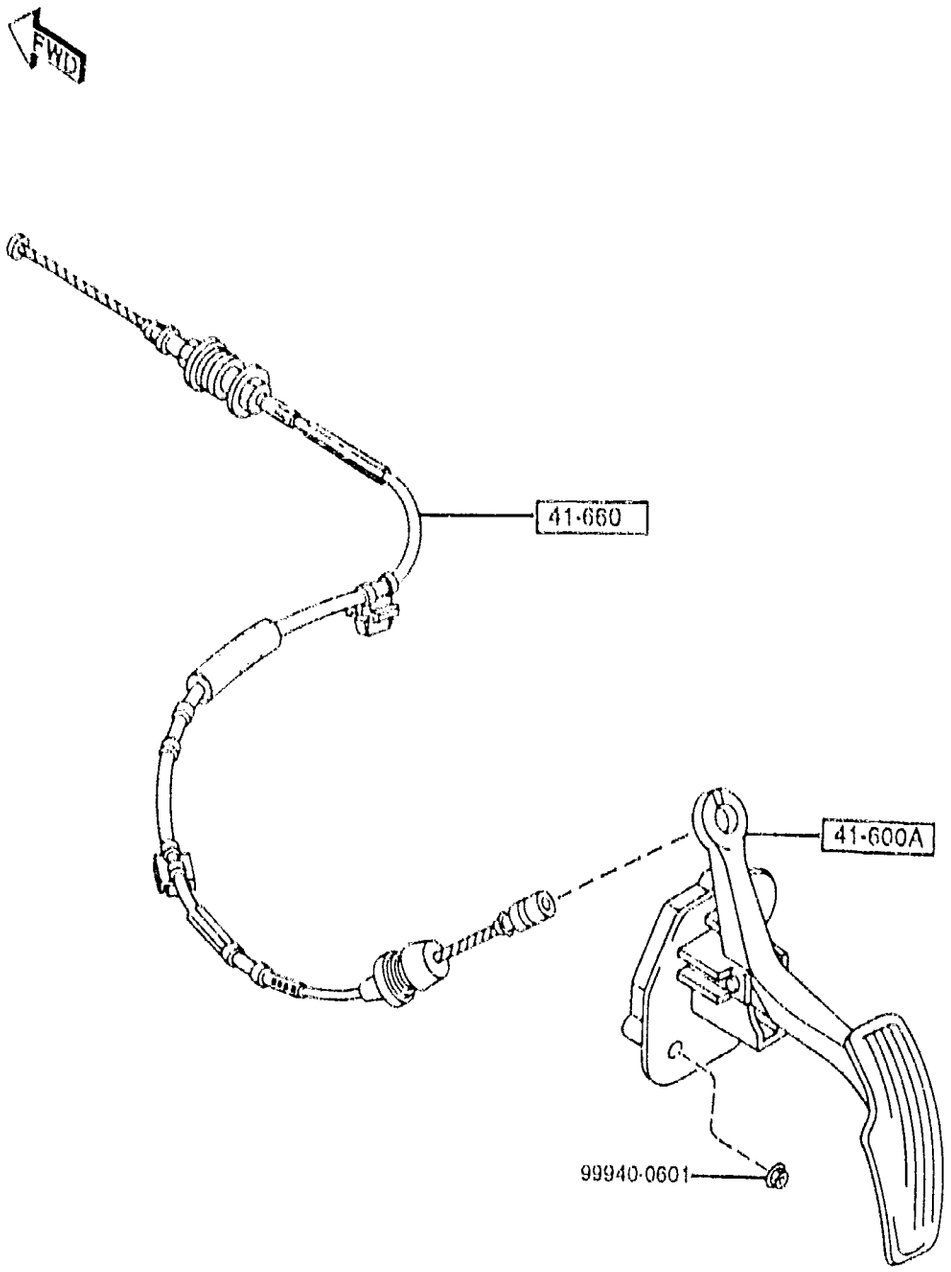

4160 -1 * ACCELERATOR CONTROL SYSTEM

PART NO.	QTY	MODEL/RESTRICTION	MODEL/RESTRICTION	MODEL/RESTRICTION	FROM-TO
41-600A		PEDAL,ACCEL.			
FD01-41-600B	1				
41-660		CABLE,ACCEL.			
FD01-41-660B	1				

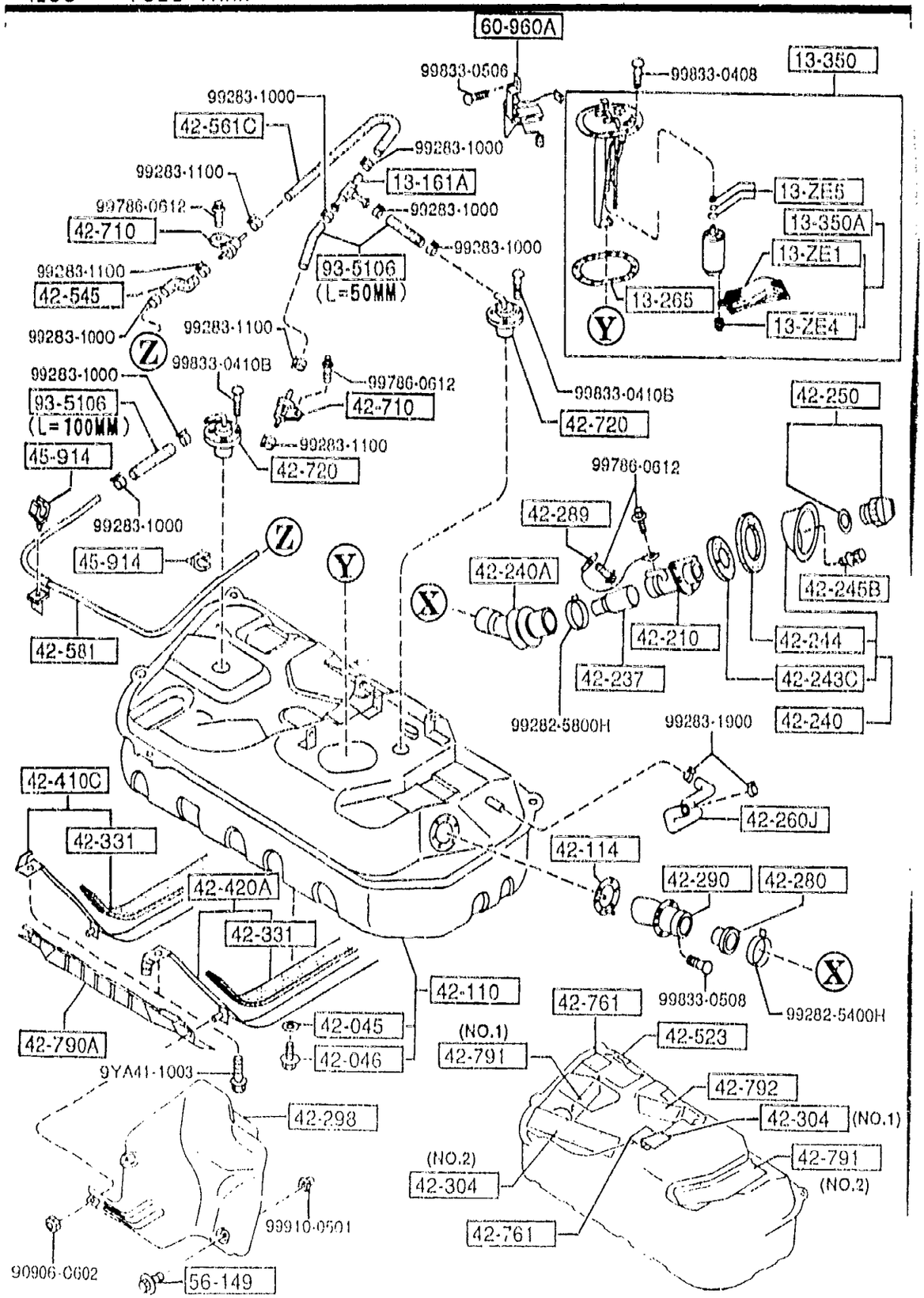

PART NO.	QTY	MODEL/RESTRICTION	MODEL/RESTRICTION	MODEL/RESTRICTION	FROM-TO
13-ZE1		FILTER,FUEL PUMP			
JE17-13-ZE1	1	DENSO			
13-ZE4		WASHER,LOCK-PUMP FILTER			
FEH2-13-ZE4	1	NIPPONDENSO (JAPAN)			
13-ZE5		RING,'O'-FUEL PUMP			
BP02-13-ZE5	1				
13-161A		JOINT'T'			
E580-13-161	1				
13-265		GASKET			
MG30-60-962	1				
13-350		PUMP,FUEL			
N3A1-13-35Z	1				
13-350A		PUMP,FUEL-SUB			
N390-13-350	1				
42-045		GASKET,DRAIN PLUG			
0866-42-046	1				
42-046		PLUG,DRAIN			
B596-42-045	1				
42-110		TANK,FUEL			
FD31-42-110	1	(MT)			
FD33-42-110	1	(AT)			
42-114		GASKET,FILLER PIPE/TANK			
MG31-42-114	1				
42-210		PIPE,FILLER			
FD01-42-210A	1				
42-237		PIPE,INNER			
FD01-42-237	1				

4200 -2 FUEL TANK

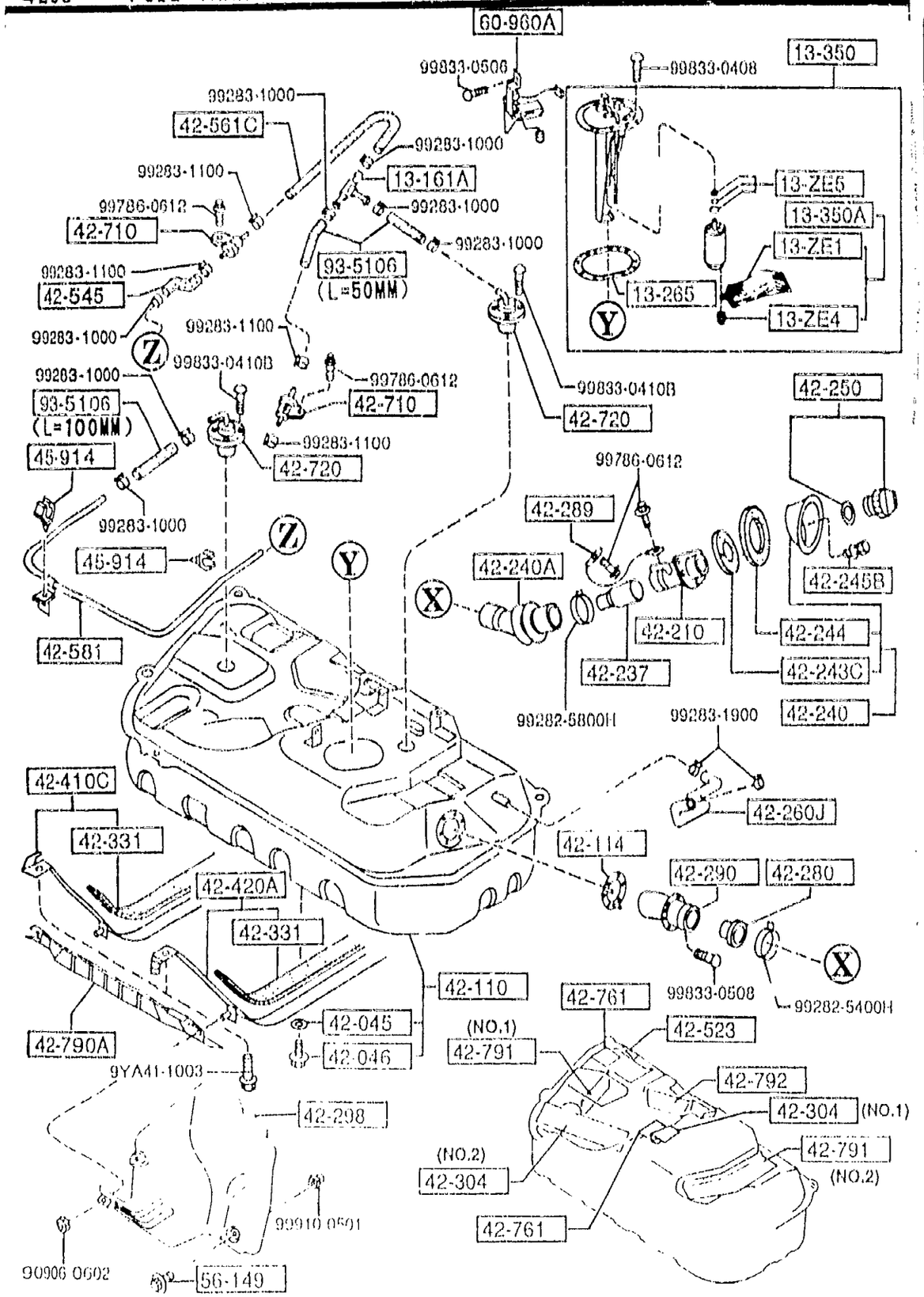

PART NO.	QTY	MODEL/RESTRICTION	MODEL/RESTRICTION	MODEL/RESTRICTION	FROM-TO
42-240		COVER,DUST			
FD01-42-24Z	1				
42-240A		HOSE,JOINT-FILLER PIPE			
FD01-42-231A	1				
42-243C		GASKET'A',REINFORCEMENT			
GE60-42-243	1				
42-244		GASKET'B',DUST COVER			
FD01-42-244	1				
42-245B		BOLT,DUST COVER			
H260-42-245A	2				
42-250		CAP,FILLER			
UE54-42-250	1				
42-260J		HOSE,BREATHER			
FD01-42-232	1				
42-280		VALVE,NON RETURN			
D061-42-270	1				
42-289		WIRE,EARTH-FILLER PIPE			
FD01-42-289	1				
42-290		PIPE,FILLER NO.2			
FD17-42-11X	1				
42-298		PROTECTOR,FILLER HOSE			
FD01-42-298	1				
42-304		PAD,FUEL TANK			
B455-42-761	1	NISSHO (ILLUST. NO.1)			
FD01-42-762	1	RYODEN (ILLUST. NO.2)			
42-331		SHEET			
J001-42-715	2				

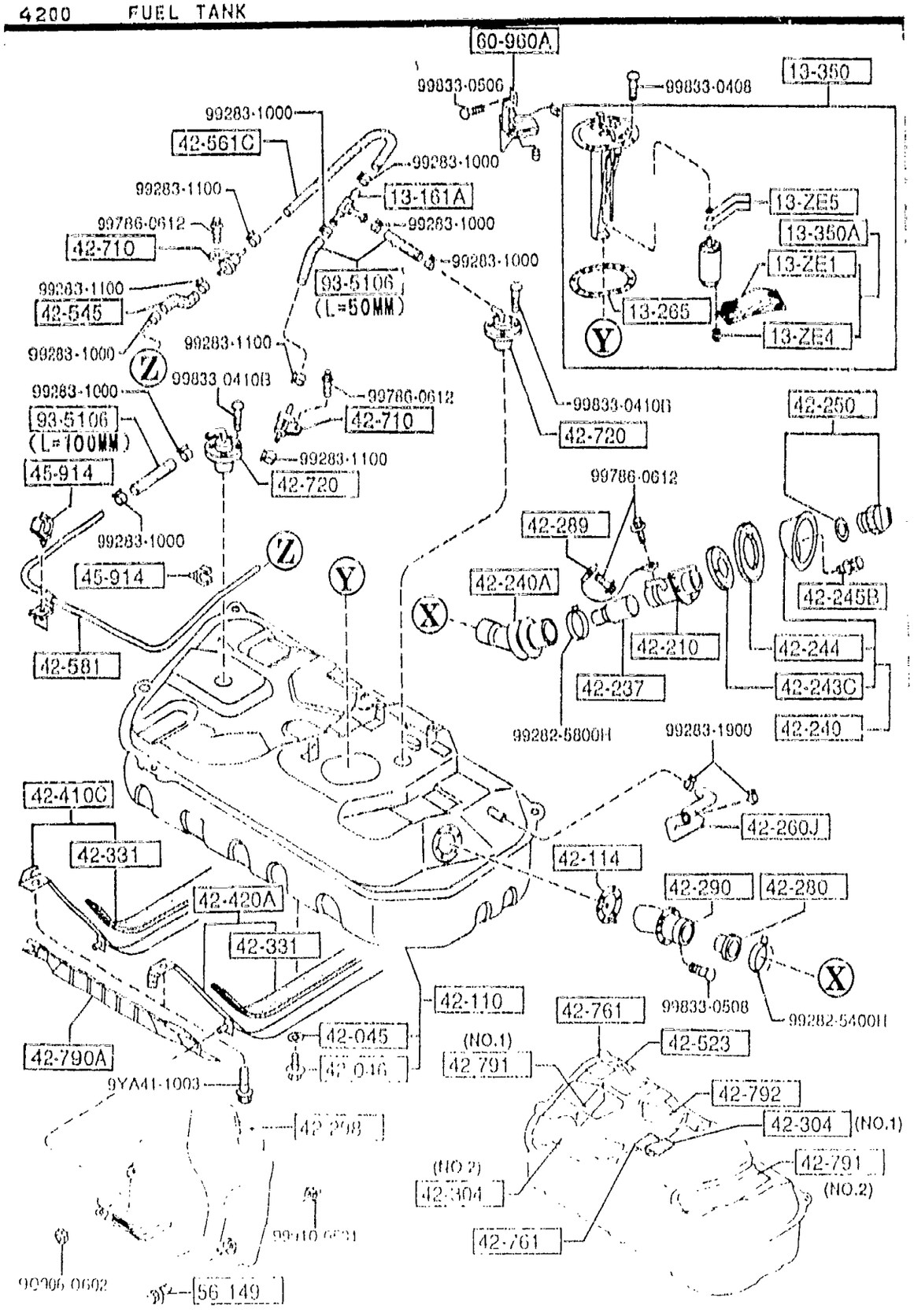

PART NO.	QTY	MODEL/RESTRICTION	MODEL/RESTRICTION	MODEL/RESTRICTION	FROM-TO
42-410C		BAND(R),TANK FIX.			
FD01-42-710	1				
42-420A		BAND(L),TANK FIX.			
FD01-42-720	1				
42-523		PAD,FUEL TANK			
FD01-42-767	1				
42-545		HOSE,FUEL			
FD01-42-545	1				
42-561C		HOSE NO.1,BREATHER			
HG30-42-561	1				
42-581		HOSE,BREATHER			
FD31-42-511A	1				
42-710		VALVE,CHECK			
GA5R-42-910	2				
42-720		VALVE,FUEL VAPOR.			
BC1M-42-980	2				-5501
A (BC1M-42-980A)					
BC1M-42-980A	2				5501-
42-761		PAD			
FD01-42-761	2				
42-790A		PROTECTOR,FUEL TANK			
FD01-42-790	1				
42-791		PAD,FUEL TANK			
8529-42-763	1	NISSHO (ILLUST. NO.1)			
FD01-42-763	1	MOLTEN (ILLUST. NO.2)			
42-792		PAD,FUEL TANK			
FD01-42-768	1				

5501 FD333 -400229

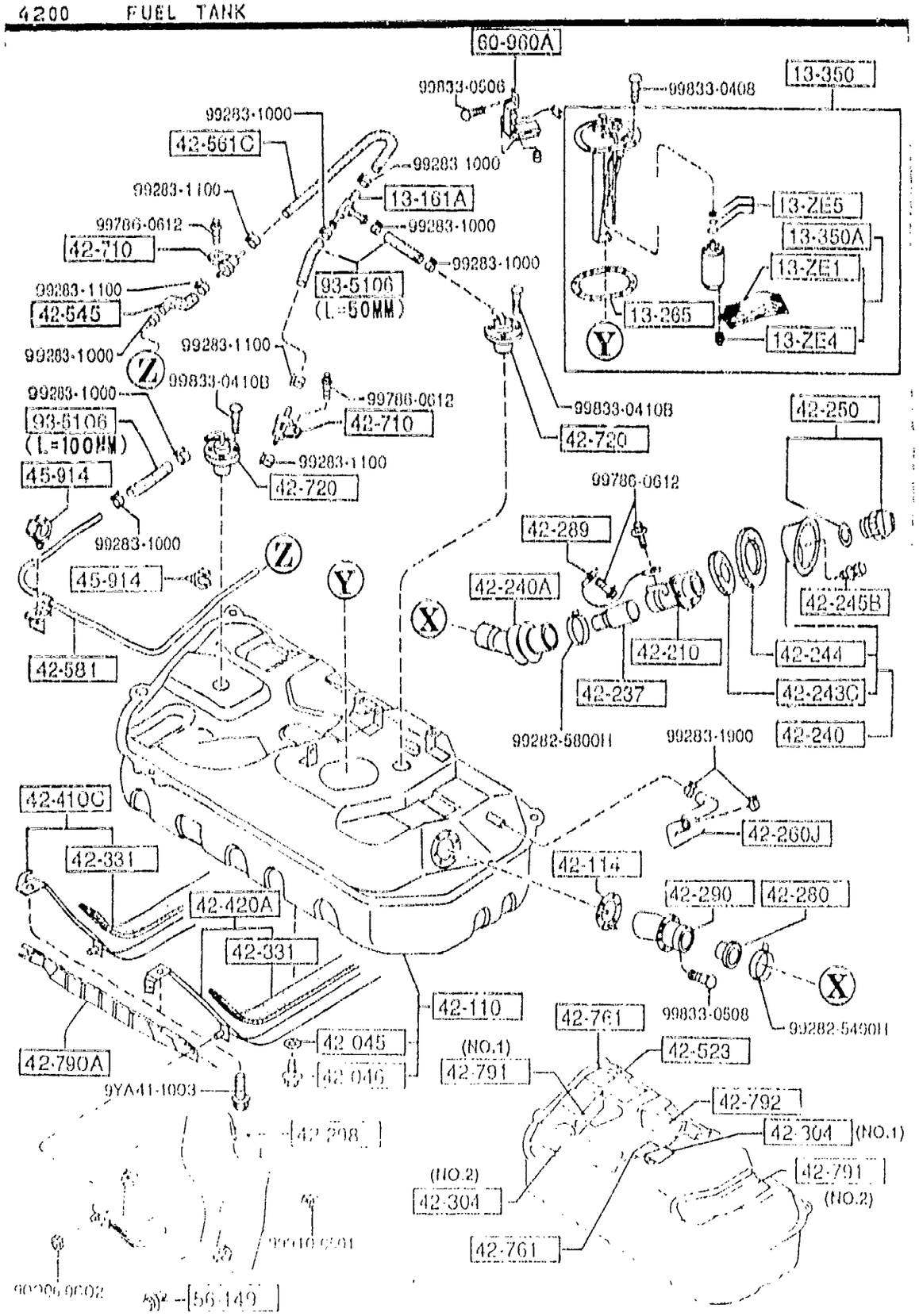

PART NO.	QTY	MODEL/RESTRICTION	MODEL/RESTRICTION	MODEL/RESTRICTION	FROM-TO
45-914		HOLDER,PIPE			
FB01-45-914	2	NIFUKO			
56-149		SCREW,TAPPING-MUD GUARD			
B455-56-149	3				
60-960A		GAUGE,FUEL TANK			
FD01-60-960A	1	(MT)			
FD17-60-960	1	(AT)			
93-5106		HOSE			
99351-06999	1	L=1M CUT IT TO USE			

4210 FUEL LID OPENER

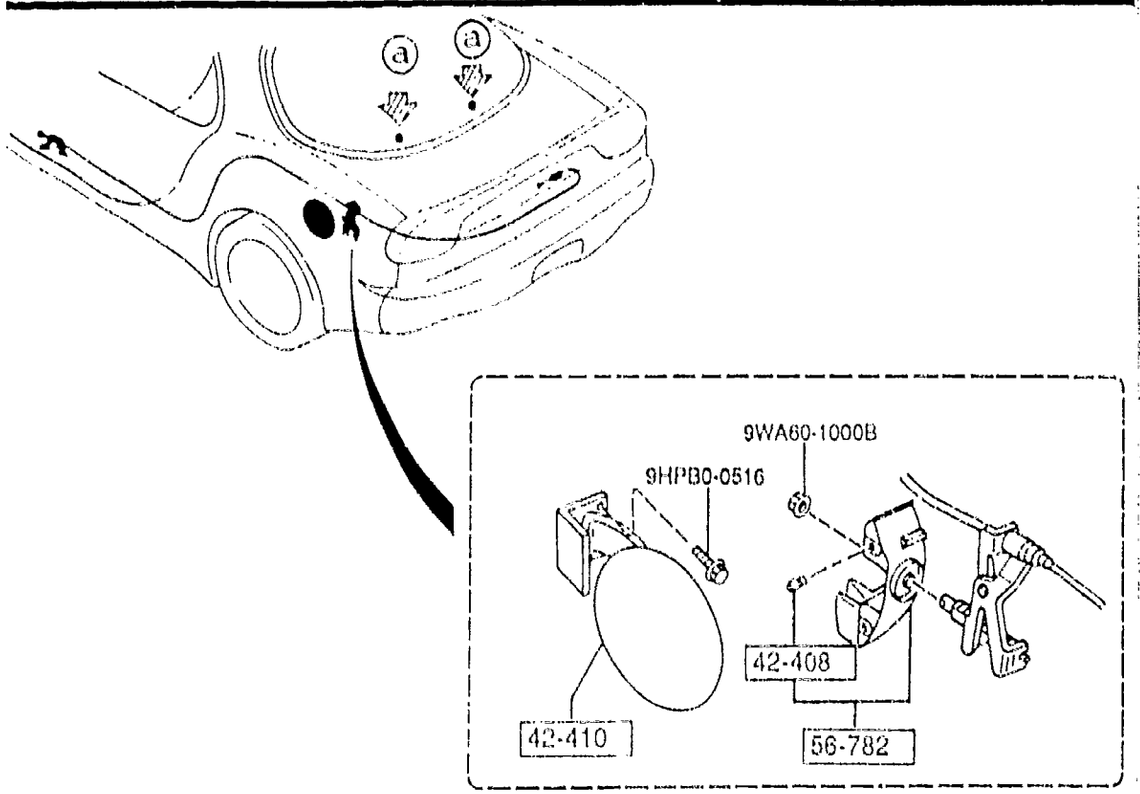

PART NO.	QTY	MODEL/RESTRICTION	MODEL/RESTRICTION	MODEL/RESTRICTION	FROM-TO
42-408		STOPPER,FILLER LID			
0187-70-491	2				
42-410		LID,FUEL FILLER			
FD01-42-41X	1				
45-961B		CAP			
H002-45-961	2				
56-782		BRACKET,STOPPER			
FD01-56-83XC	1				
56-860A		LEVER,OPENER			
FD01-56-860C	1				
62-352		CABLE,OPENER			
FD01-56-870A	1				

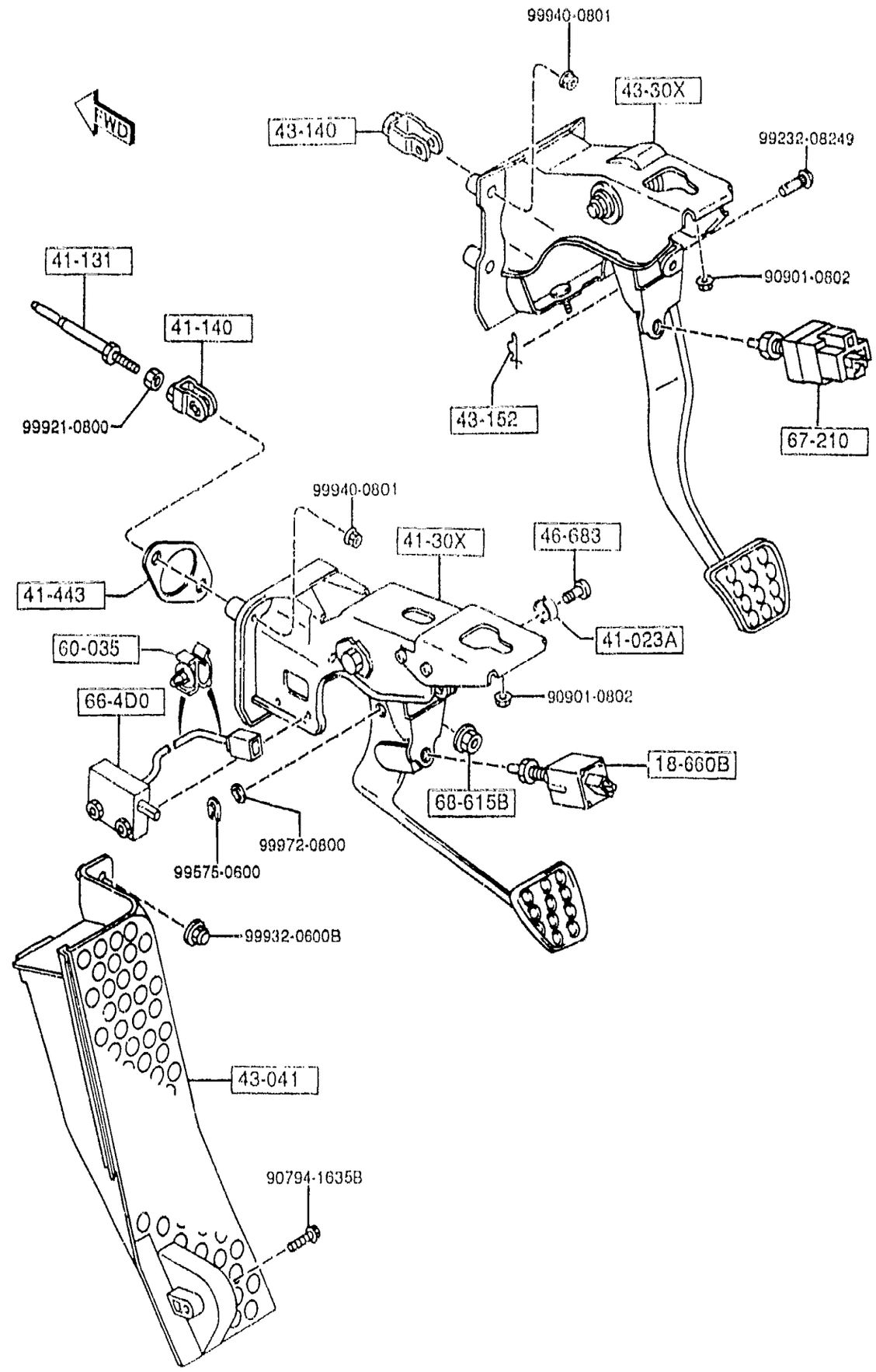

PART NO.	QTY	MODEL/RESTRICTION	MODEL/RESTRICTION	MODEL/RESTRICTION	FROM-TO
18-660B		SWITCH,CLUTCH			
LA01-66-490A	1				
41-023A		BUSH			
0727-41-023	1				
41-131		ROD,PUSH			
0727-41-131	1				
41-140		FORK,CLUTCH			
0305-41-140	1				
41-30X		PEDAL,CLUTCH			
FD01-41-30XA	1				
41-443		GASKET			
H001-41-443	1				
43-041		REST,FOOT			
FD01-43-041	1				
43-140		FORK,BRAKE			
HE01-43-140	1				
43-152		PIN,SNAP			
D001-43-152	1				
43-30X		PEDAL,BRAKE			
FD01-43-30XA	1				-4B14
AN(FD01-43-30XB)					
FD01-43-30XB	1				4B14-
46-683		PIN			
0187-46-683	1				
60-035		CLIP,C.S.D. WIRE			
W201-60-035	2				
66-4D0		SWITCH,CLUTCH CUT			
HF05-66-4D0	1				

4B14 FD333 -400022

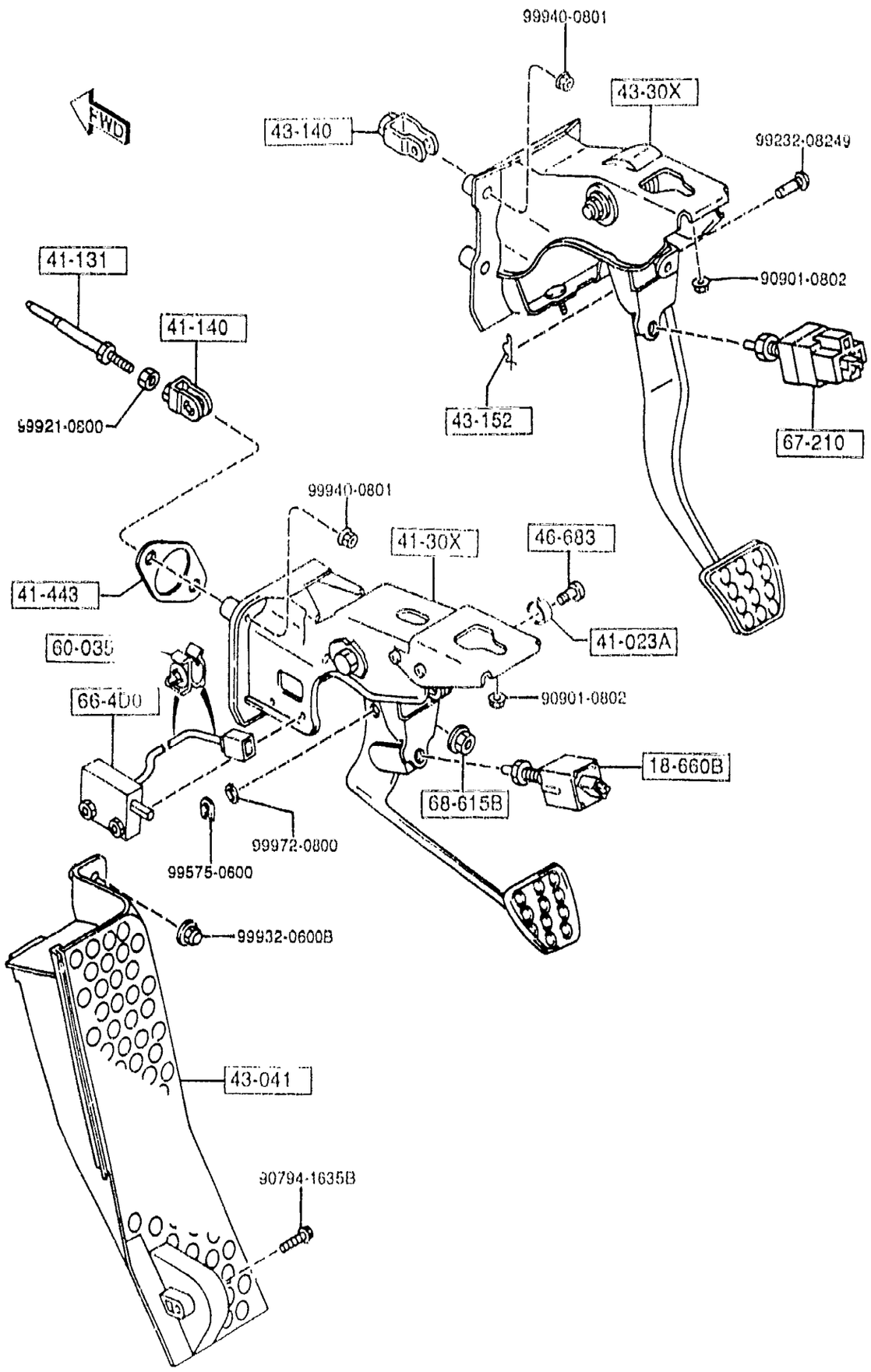

PART NO.	QTY	MODEL/RESTRICTION	MODEL/RESTRICTION	MODEL/RESTRICTION	FROM-TO
67-210		SWITCH,STOP-LAMP			
R70-66-490A	1				
68-615B		NUT,FLANGE-CAP			
B100-68-615	1				

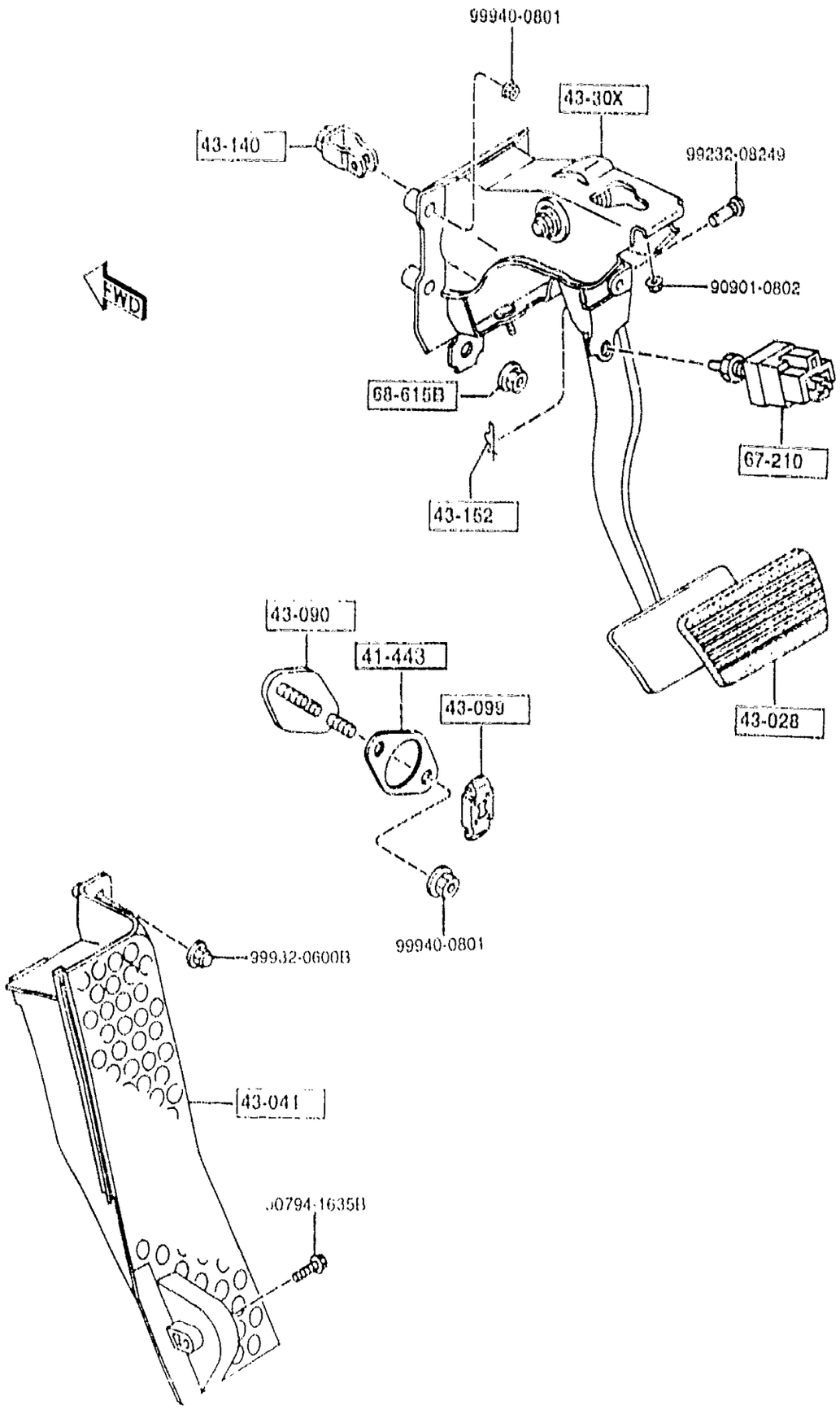

PART NO.	QTY	MODEL/RESTRICTION	MODEL/RESTRICTION	MODEL/RESTRICTION	FROM-TO
41-443		GASKET			
H001-41-443	1				
43-028		PAD,PEDAL			
H261-43-028	1				
43-041		REST,FOOT			
FD01-43-041	1				
43-090		PLATE			
HF23-43-090A	1				
43-099		HOLDER,PLATE			
HF23-43-099	1				
43-140		FORK,BRAKE			
HE01-43-140	1				
43-152		PIN,SNAP			
D001-43-152	1				
43-30X		PEDAL,BRAKE			
FD02-43-30XA	1				-4B07
AN(FD02-43-30XB)					
FD02-43-30XB	1				4B07-
67-210		SWITCH,STOP-LAMP			
BR70-66-490A	1				
68-615B		NUT,FLANGE-CAP			
B100-68-615	1				

4B07 FD333 -400022

4340 BRAKE MASTER CYLINDER & POWER BRAKE

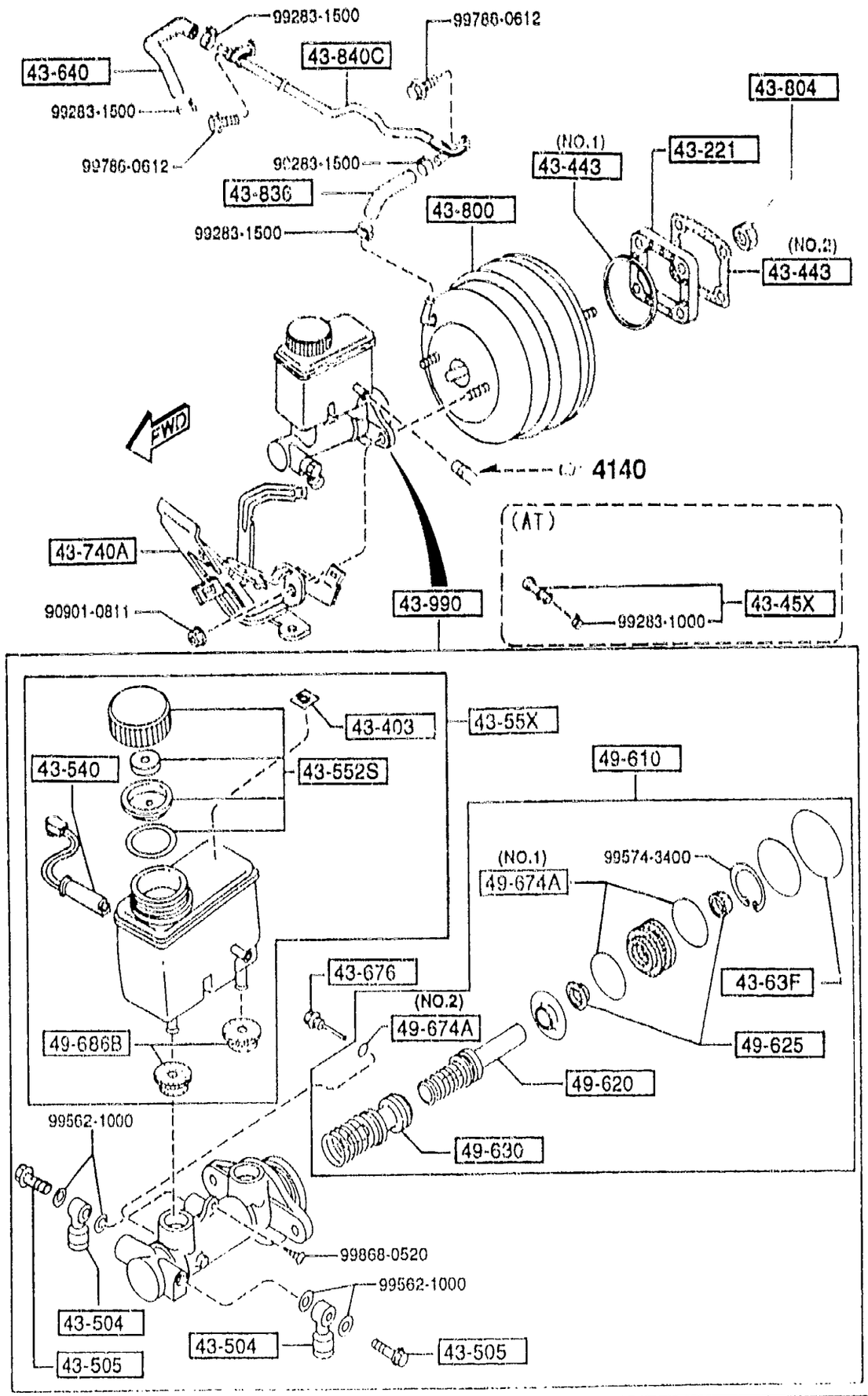

PART NO.	QTY	MODEL/RESTRICTION	MODEL/RESTRICTION	MODEL/RESTRICTION	FROM-TO
43-221		SPACER			
FD01-43-221A	1				
43-403		LABEL,ISO			
TA04-43-403A	1				
43-443		GASKET,VAC POWER ASSIST			
FD01-43-443A	1	(ILLUST. NO.1)			
H001-43-443	1	NON ASBESTOS (ILLUST. NO.2)			
43-45X		PROTECTOR			
B603-43-45XA	1	(AT)			
43-504		JOINT,PIPE			
W023-43-504	2				
43-505		BOLT,CONNECTOR			
W023-43-505	2				
43-540		INDICATOR,LEVEL			
FD04-43-540A	1				
43-55X		SET,TANK			
FDY1-43-55X	1				
43-552S		CAP SET,RESERVE TANK			
B603-49-580	1				
43-63F		RING,'O'			
*B252-49-512	1				
43-640		HOSE,VACUUM			
FD01-43-640B	1				
43-676		BOLT SET			
H381-43-676	1				
43-740A		BRACKET,CABLE			
FD01-43-740B	1				

4340 BRAKE MASTER CYLINDER & POWER BRAKE

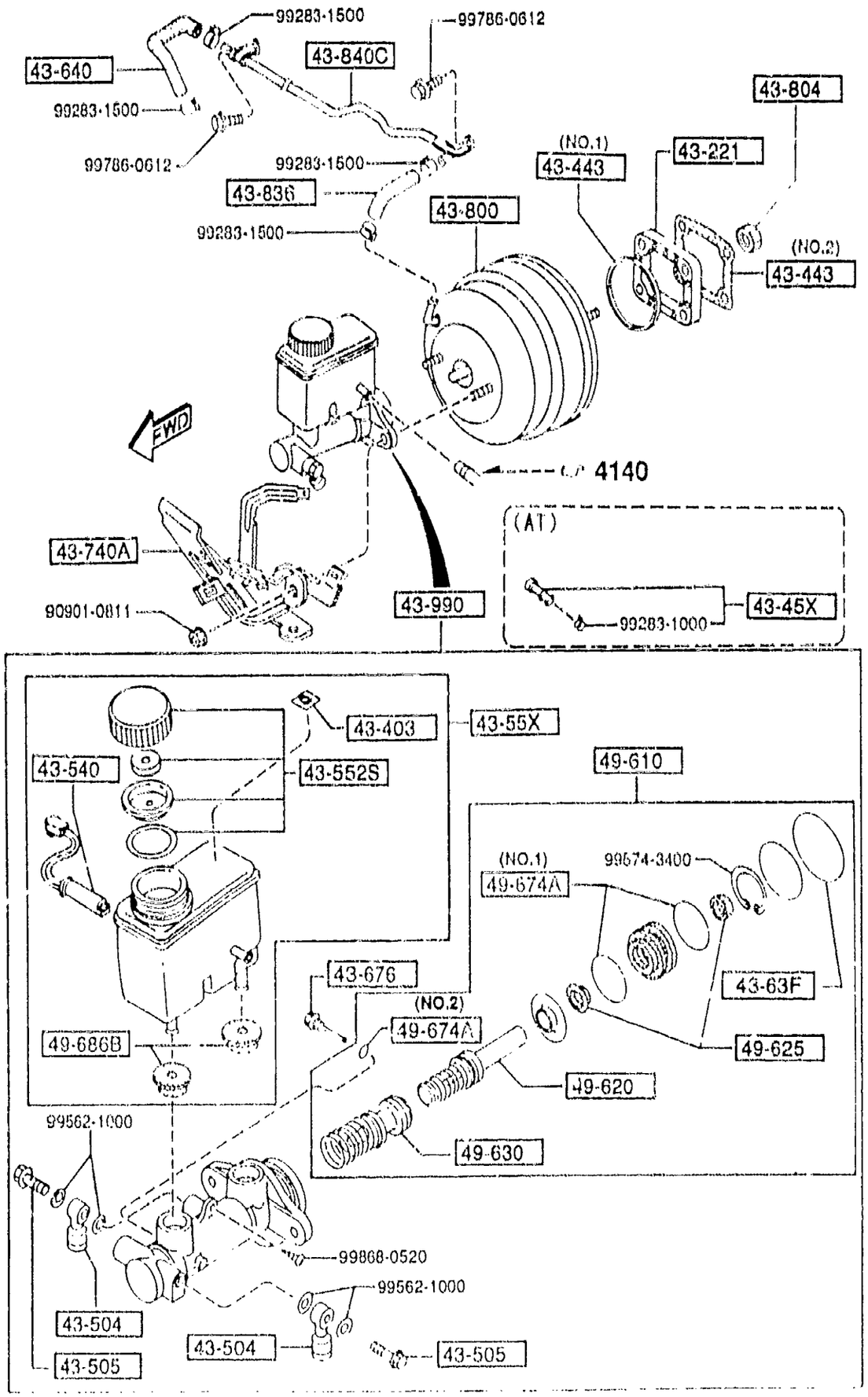

AUFA06

PART NO.	QTY	MODEL/RESTRICTION	MODEL/RESTRICTION	MODEL/RESTRICTION	FROM-TO
43-800		VACUUM POWER ASSIST			
FD04-43-800B	1				
43-804		NUT			
B01C-43-954	1				
43-836		HOSE,VACUUM			
FD01-43-836B	1				
43-840C		PIPE,VACUUM			
FD01-43-840B	1				
43-990		CYL.,TANDEM MASTER			
FD04-43-40Z	1				
49-610		PARTS KIT,INN.-BRAKE			
B6Y4-43-41Z	1				-5901
AN(B6Y4-43-41ZA)					
*B6Y4-43-41ZA	1				5901-
49-620		PISTON,PRIMARY			
B533-43-62Z	1				
49-625		CUP,SECONDARY			
NA23-43-625	2				
49-630		PISTON,FLOATING			
B604-43-63Z	1				
49-674A		RING,'O'-MASTER CYL.			
NA23-43-515	2	SHINEI KOGYO (ILLUST. NO.1)			
99541-00603	1	NOK (ILLUST. NO.2)			
49-686B		BUSH,ELBOW JOINT			
F100-49 686	2				

5901 FD333 -400232

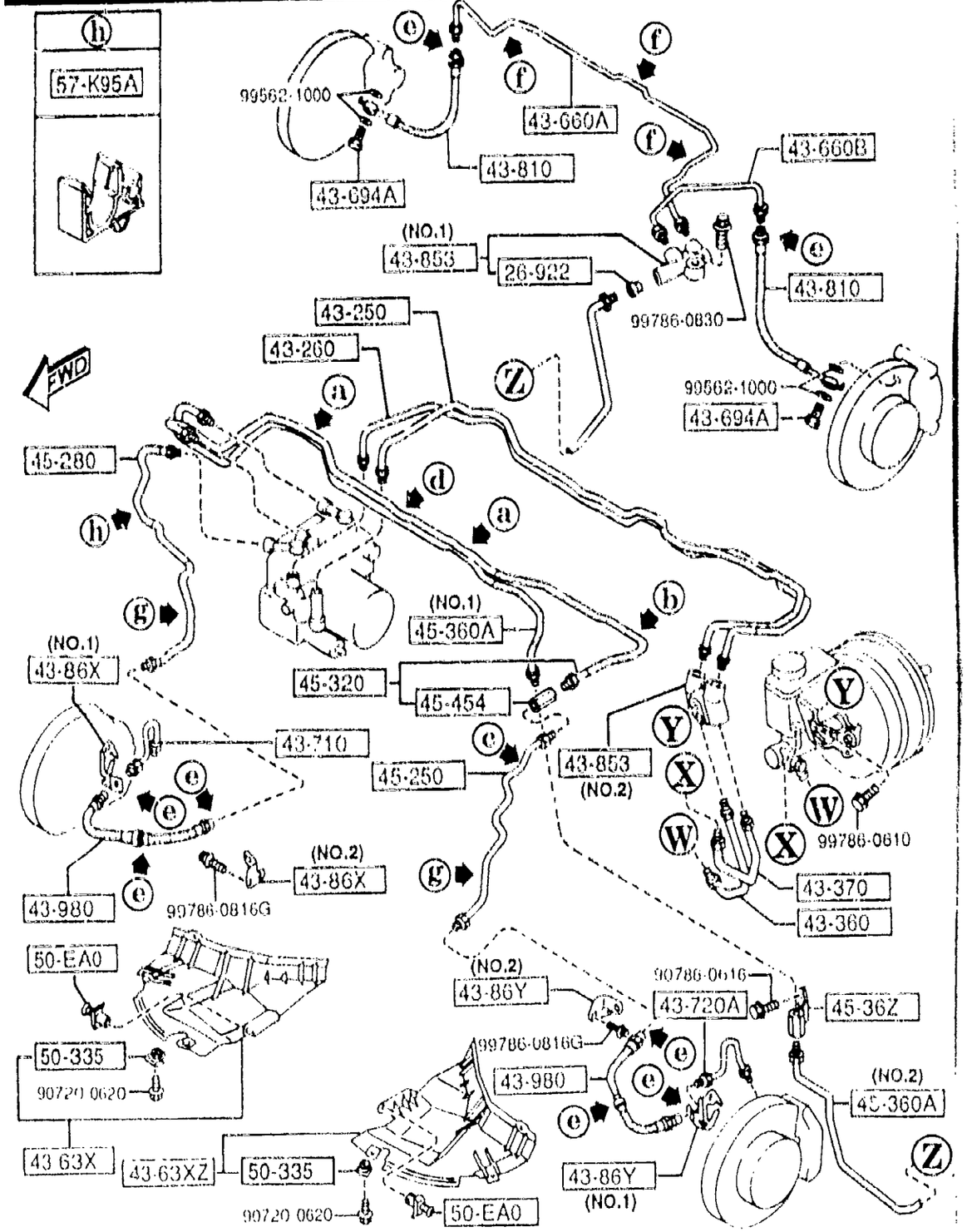

a	b	c	d	e	f	g
45-920	45-921A	45-903G	45-964	43-635	45-919	45-914
	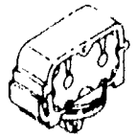	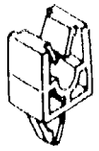	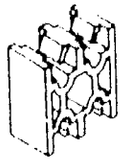			

PART NO.	QTY	MODEL/RESTRICTION	MODEL/RESTRICTION	MODEL/RESTRICTION	FROM-TO
26-922		SHEET,TUBE			
0613-26-922	1				
43-250		PIPE NO.1,BRAKE-A.B.			
FD31-43-250B	1				
43-260		PIPE NO.2,BRAKE-A.B.			
FD31-43-260C	1				
43-360		PIPE,BRAKE			
FD04-43-360B	1				
43-370		PIPE,BRAKE			
FD04-43-370B	1				
43-63X		DUCT(R),AIR-BRAKE PIPE			
FD01-43-63XF	1	(NOR. SUSP)			
FD03-43-63XF	1	(HARD SUSP)			
43-63XZ		DUCT(L),AIR-BRAKE PIPE			
FD01-43-64XE	1	(NOR. SUSP)			
FD03-43-64XE	1	(HARD SUSP)			
43-635		CLIP,FLEXIBLE HOSE			
W023-43-635	8				-4927
A (W023-43-635A)					
W023-43-635A	8				4927-
43-660A		PIPE(R),BRAKE-REAR			
FD01-43-670B	1				
43-660B		PIPE(L),BRAKE-REAR			
FD01-43-680B	1				
43-694A		BOLT,CONNECTOR			
B001-43-694A	2				
43-710		PIPE(R),BRAKE-FRONT			
FD01-43-710A	1				

4927 FD333 -400013

4360 BRAKE PIPINGS

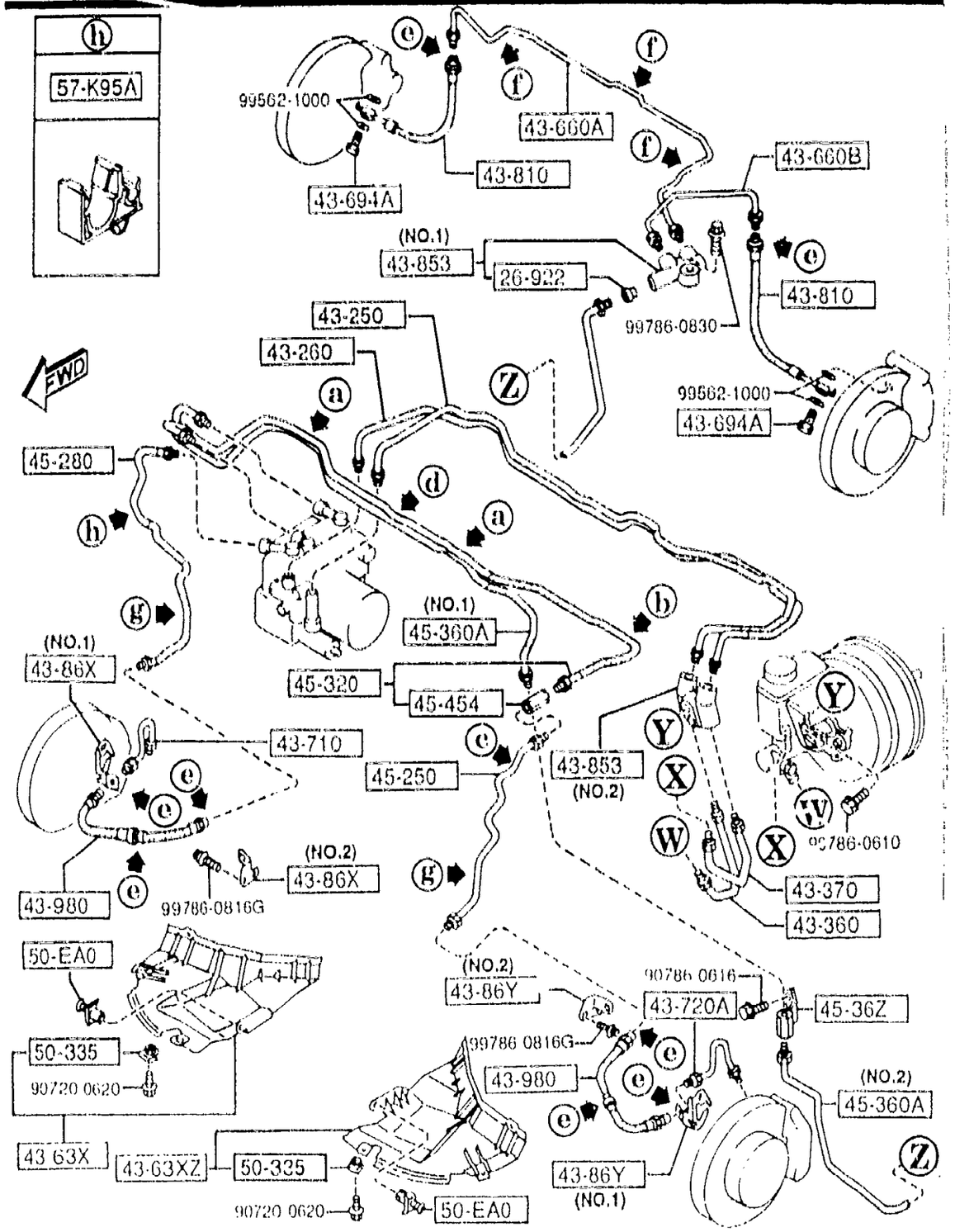

a	b	c	d	e	f	g
45 920	45 921A	45 903G	45-964	43-635	45-919	45-914
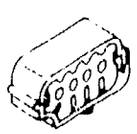	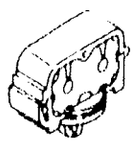	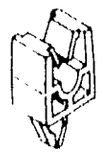	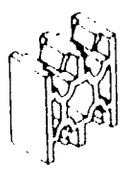			

PART NO.	QTY	MODEL/RESTRICTION	MODEL/RESTRICTION	MODEL/RESTRICTION	FROM-TO
43-720A		PIPE(L),BRAKE-FRONT			
FD01-43-720A	1				
43-810		HOSE,FLEXIBLE			
FD01-43-810A	2				
43-853		JOINT,PIPE			
F100-43-85X	1	(ILLUST. NO.1)			
B455-43-853	1	(ILLUST. NO.2)			
43-86X		BRACKET,HOSE			
FD01-43-86XB	1	(ILLUST. NO.1)			
FD01-43-87XA	1	(ILLUST. NO.2)			
43-86Y		BRACKET,HOSE			
FD01-43-86YB	1	(ILLUST. NO.1)			
FD01-43-87YA	1	(ILLUST. NO.2)			
43-980		HOSE,FLEXIBLE			
FD01-43-980B	2				
45-250		PIPE,BRAKE-FRT			
FD01-45-33XC	1				
45-280		PIPE(R),BRAKE-FRONT			
FD31-45-280A	1				
45-320		PIPE(L),BRAKE-FRONT			
FD31-45-320A	1				
45-36Z		JOINT,FUEL PIPE			
FD01-45-36ZA	1				
45-360A		PIPE,BRAKE-REAR			
FD31-45-36XA	1	(ILLUST. NO.1)			
FD01-45-360B	1	(ILLUST. NO.2)			
45-454		JOINT,PIPE			
D001-45-367	1				

4360 BRAKE PIPINGS

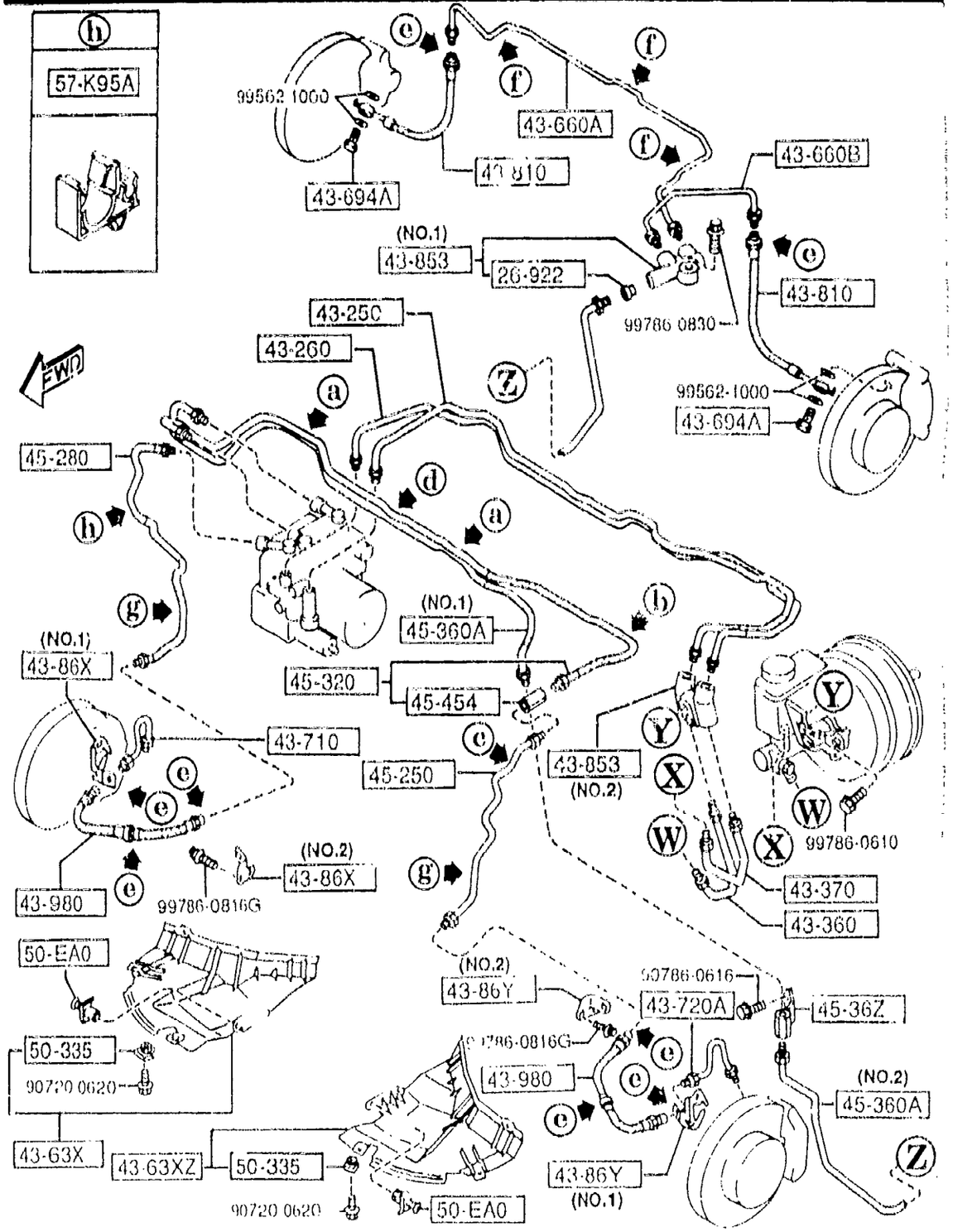

a	b	c	d	e	f	g
45-920	45-921A	45-903G	45-964	43-635	45-919	45-914

PART NO.	QTY	MODEL/RESTRICTION	MODEL/RESTRICTION	MODEL/RESTRICTION	FROM-TO
45-903G		CLIP,PIPE			
B455-45-916	1				
45-914		HOLDER,PIPE			
FB01-45-914	2	NIFUKO			
45-919		CLIP,PIPE			
B001-45-919B	3				
45-920		BRACKET			
NA20-45-920B	2				
45-921A		HOLDER,PIPE			
F100-45-92X	1				
45-964		HOLDER,PIPE-FRT BRAKE(L)			
F048-45-964B	1				
50-EA0		FASTENER			
EA01-50-EA0	2				
50-335		NUT,CLIP			
FB01-50-133C	4				
57-K95A		CLIP,AIR BAG			
FD14-57-K95	1				

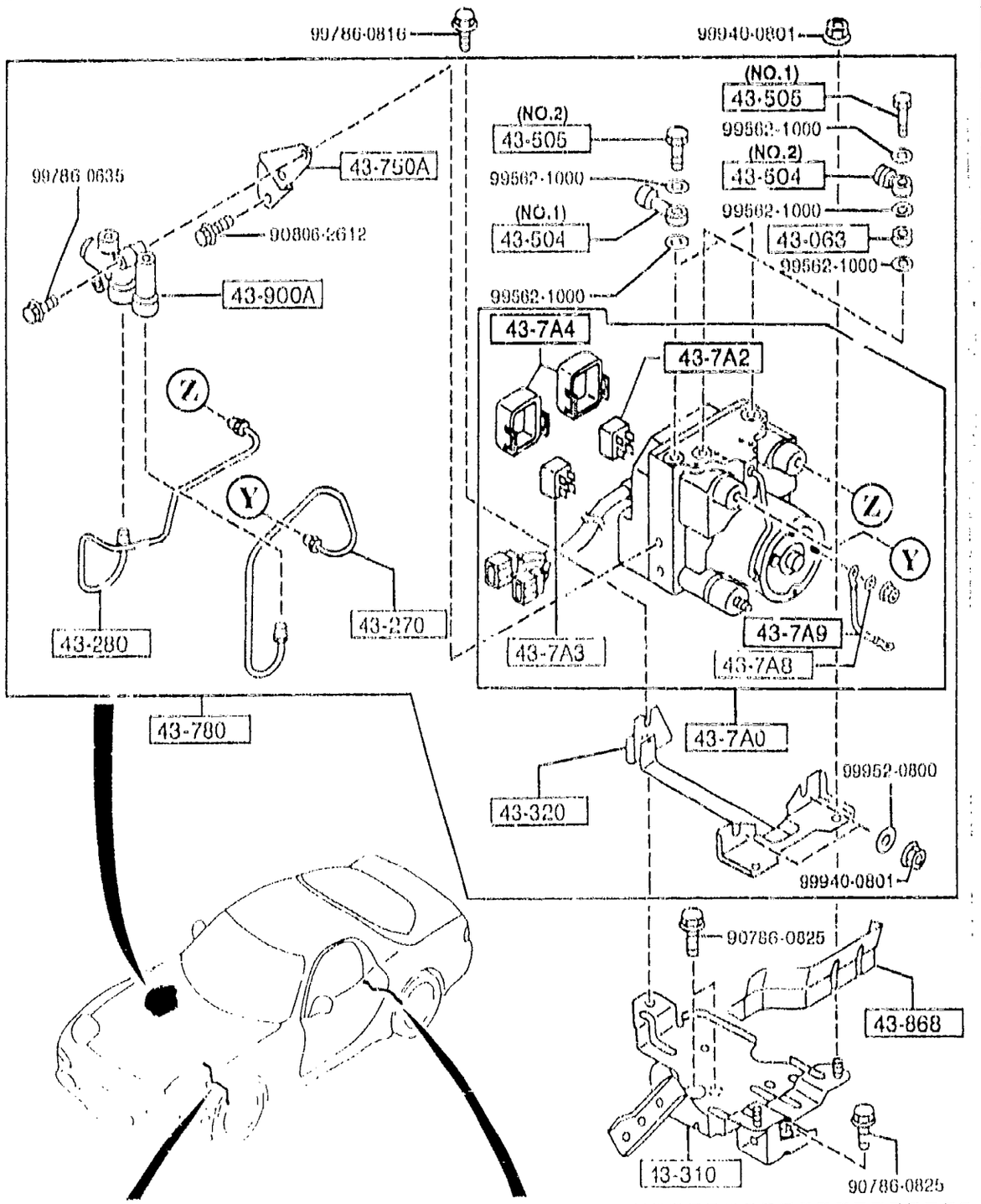

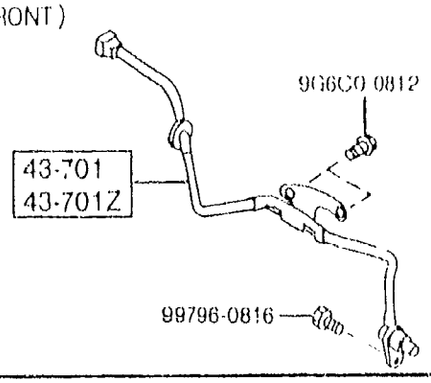

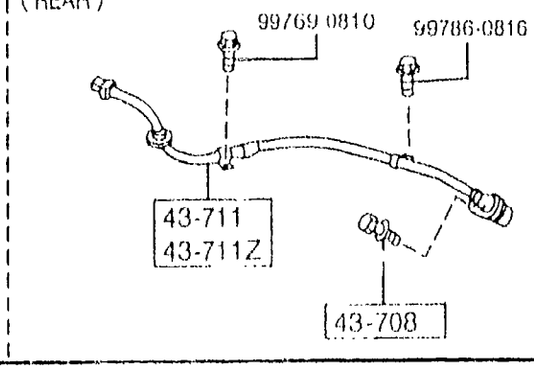

AUFA06

PART NO.	QTY	MODEL/RESTRICTION	MODEL/RESTRICTION	MODEL/RESTRICTION	FROM-TO
43-063		SPACER			
HG83-43-506	1				
43-270		PIPE NO.3,BRAKE-A.B.			
FD31-43-270C	1				
43-280		PIPE NO.4,BRAKE-A.B.			
FD31-43-280B	1				
43-310		BRACKET NO 1,A.B.S.			
FD31-43-310	1				
43-320		BRACKET NO 2,A.B.S.			
FD31-43-320A	1				
43-504		JOINT,PIPE			
EA03-43-504B	2	(ILLUST. NO.1)			
W023-43-504	1	(ILLUST. NO.2)			
43-505		BOLT,CONNECTOR			
HG83-43-505	1	(ILLUST. NO.1)			
W023-43-505	2	(ILLUST. NO.2)			
43-7A0		UNIT,HYDRAULIC-ABS			
FD31-43-7A0A	1				-5410
A (FD31-43-7A0B)					
FD31-43-7A0B	1				5410-
43-7A2		RELAY,MOTOR-HYD. UNIT			
*HG82-43-7A2	1				
43-7A3		RELAY,VALVE-HYD. UNIT			
NA23-43-7A3	1				
43-7A4		COVER'L',HYDRAULIC UNIT			
*HG82-43-7A4	2				
43-7A8		WASHER,HYD. UNIT			
NA23-43-7A8	1				

5410 FD333 -400028

4370 ANTILOCK BRAKE SYSTEM

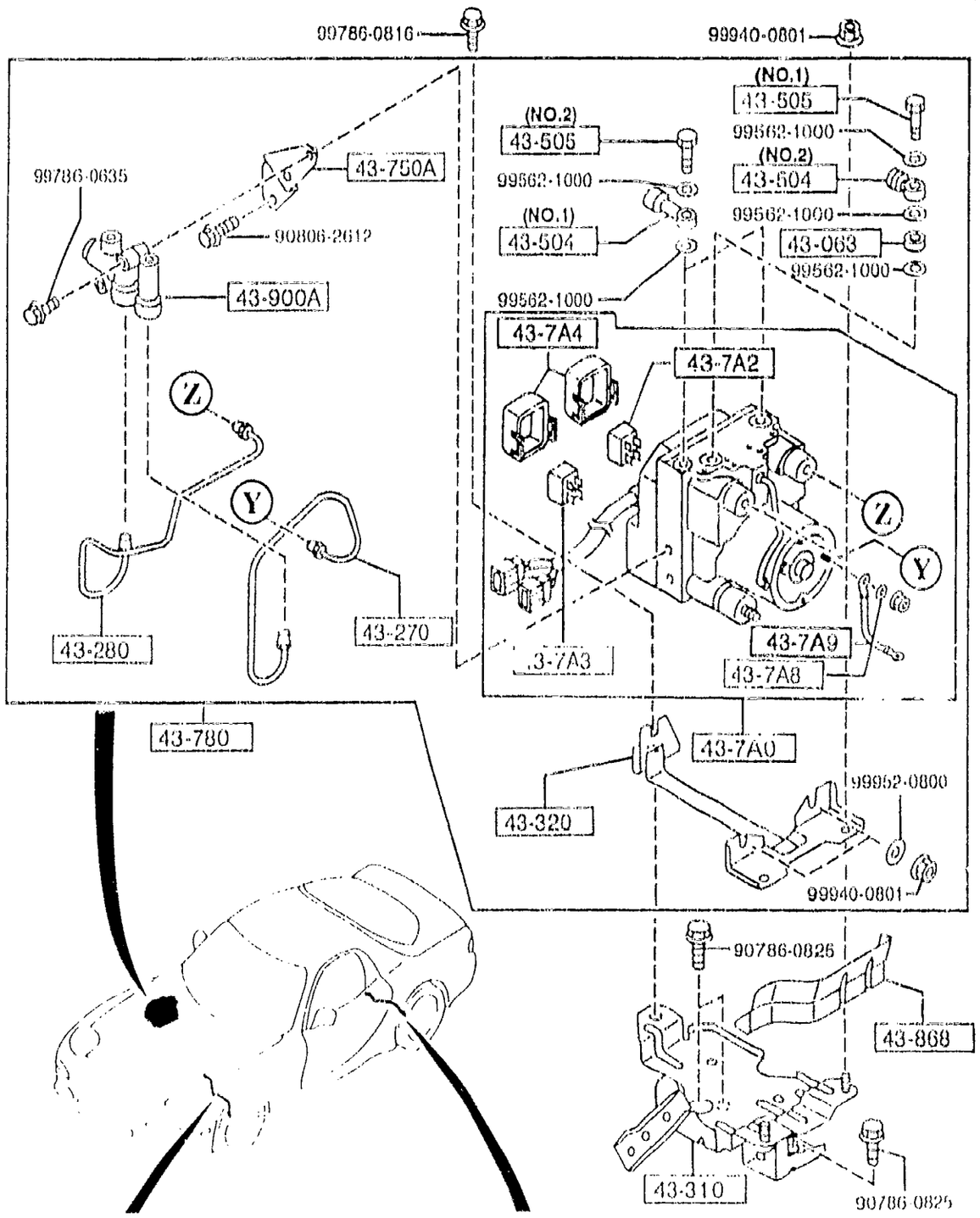

AUFA06

PART NO.	QTY	MODEL/RESTRICTION	MODEL/RESTRICTION	MODEL/RESTRICTION	FROM-TO
43-7A9		WIRE,EARTH-HYD. UNIT			
*FD31-43-7A9	1				
43-701		SENSOR(R),FRT-A.B.S.			
FD05-43-70XB	1				
43-701Z		SENSOR(L),FRT-A.B.S.			
FD05-43-73XC	1				
43-708		BOLT,REAR SENSOR			
F051-43-708A	2				
43-711		SENSOR(R),RR-A.B.S.			
FD04-43-71YC	1				
43-711Z		SENSOR(L),RR-A.B.S.			
FD04-43-72YC	1				
43-750A		HOLDER,P.B.VALVE			
FD31-43-750	1				
43-780		ANTILOCK BRAKE			
FD31-43-780C	1				-5410
A (FD31-43-780D)					
FD31-43-780D	1				5410-
43-868		INSULATOR			
FD31-43-867A	1				
43-900A		VALVE,P.B.			
F123-43-900	1				

5410 ID333 -400028

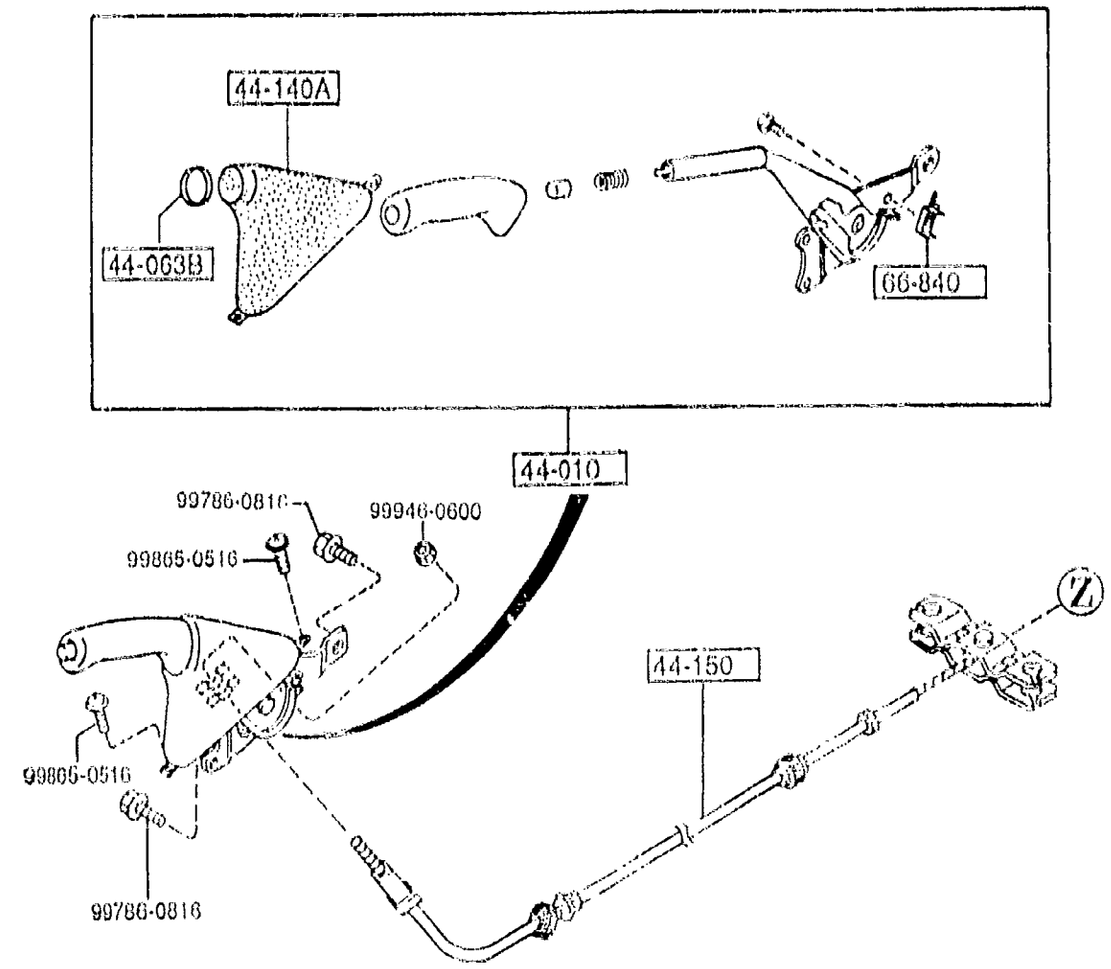

AUFA06

PART NO.	QTY	MODEL/RESTRICTION	MODEL/RESTRICTION	MODEL/RESTRICTION	FROM TO
44-010		LEVER,PARKING BRAKE			
FD01-44-010C AN(FD01-44-010H)	1				-4B01
FD01-44-010H	1				4B01-
44-063B		RING,PARK BRAKE LVR			
FD01-44-036	1				
44-140A		BOOT			
FD01-44-035	1				
44-150		CABLE,PARKING-PRT			
FD01-44-150	1				
44-375		CLIP,PARKING CABLE			
GA2B-44-375A	2	CHUOUHATSUJO			
44-375B		CLIP			
0118-44-375	2				
44-410		CABLE(R),R.-PARK.			
FD01-44-410A	1				
44-410A		CABLE(L),R.-PARK.			
FD01-44-420B	1				
66-840		SWITCH,PARKING LAMP			
FD01-66-450	1				

4B01 FD333 -400022

CAT. AUFA06-04

1997-01

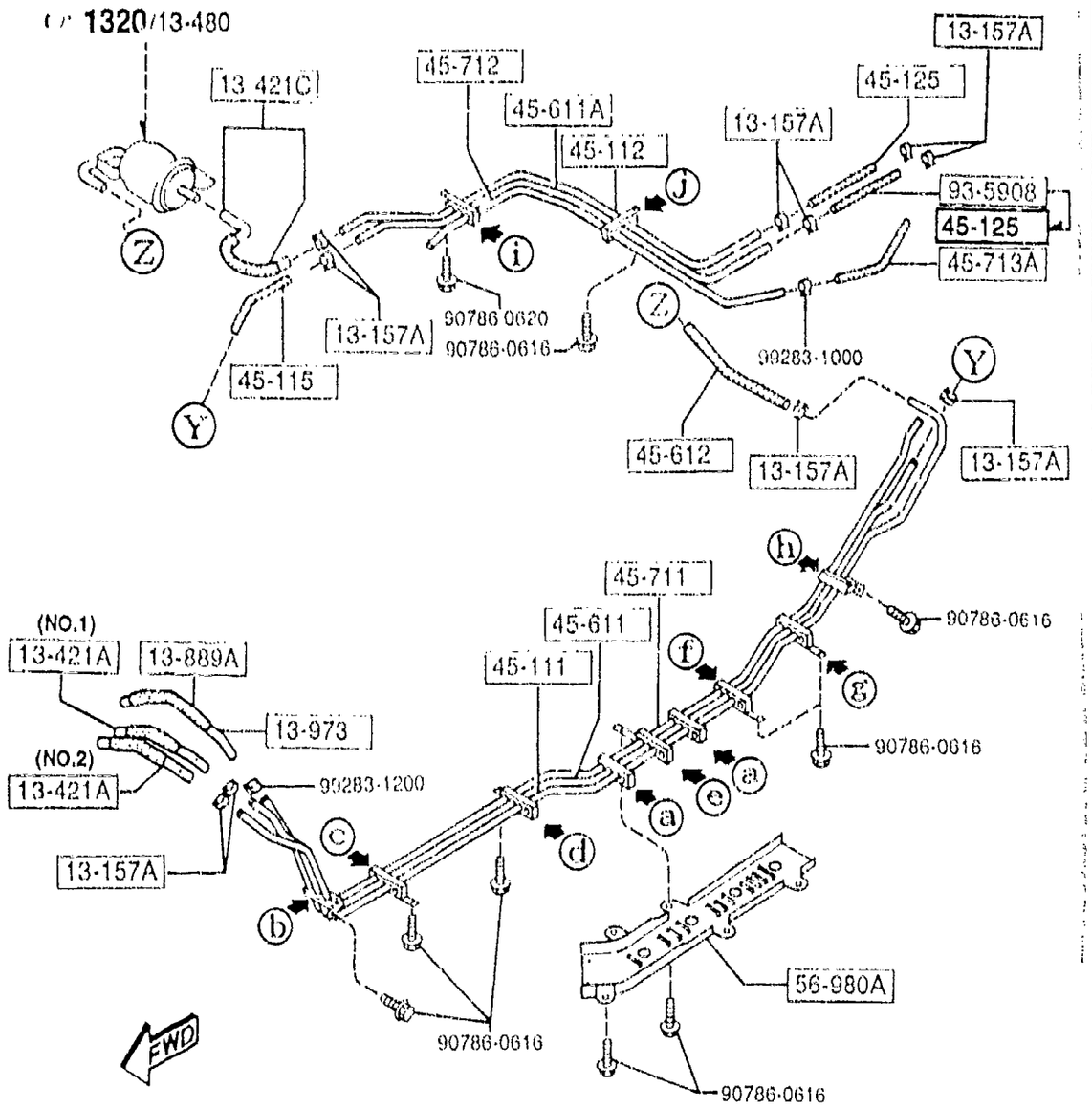

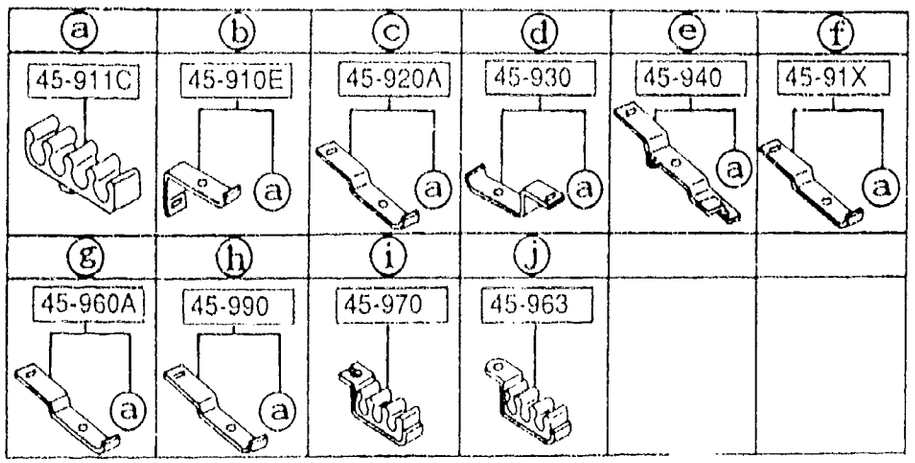

PART NO.	QTY	MODEL/RESTRICTION	MODEL/RESTRICTION	MODEL/RESTRICTION	FROM-TO
13-157A		CLIP			
8574-13-157	10				
13-421A		HOSE,FUEL MAIN			
N3A2-13-421	1	(ILLUST. NO.2)			
N3A1-13-421	1	(ILLUST. NO.1)			-5418
N3D8-13-421	1	(ILLUST. NO.1)			5418-
13-421C		HOSE,FUEL			
N3A1-13-410	1				
13-889A		PROTECTOR			
N3A2-13-889A	1				
13-973		HOSE,DRAIN			
N3A2-13-971A	1				
45-111		PIPE,FUEL-MAIN			
FD01-45-111	1				
45-112		PIPE,FUEL-MAIN			
FD01-45-112	1				
45-115		HOSE,FUEL-MAIN PIPE			
FD01-45-115B	1				
45-125		HOSE,FUEL			
99359-0815	1				-5701
99359-0815	2				5701-
45-611		PIPE,FUEL-RETURN			
FD01-45-611A	1				
45-611A		PIPE,FUEL-RETURN			
FD01-45-612	1				
45-612		HOSE,FUEL			
99359-0819	1				
45-711		PIPE,EVAPORATION			

5418 FD333 -400030
5701 FD333 -400230

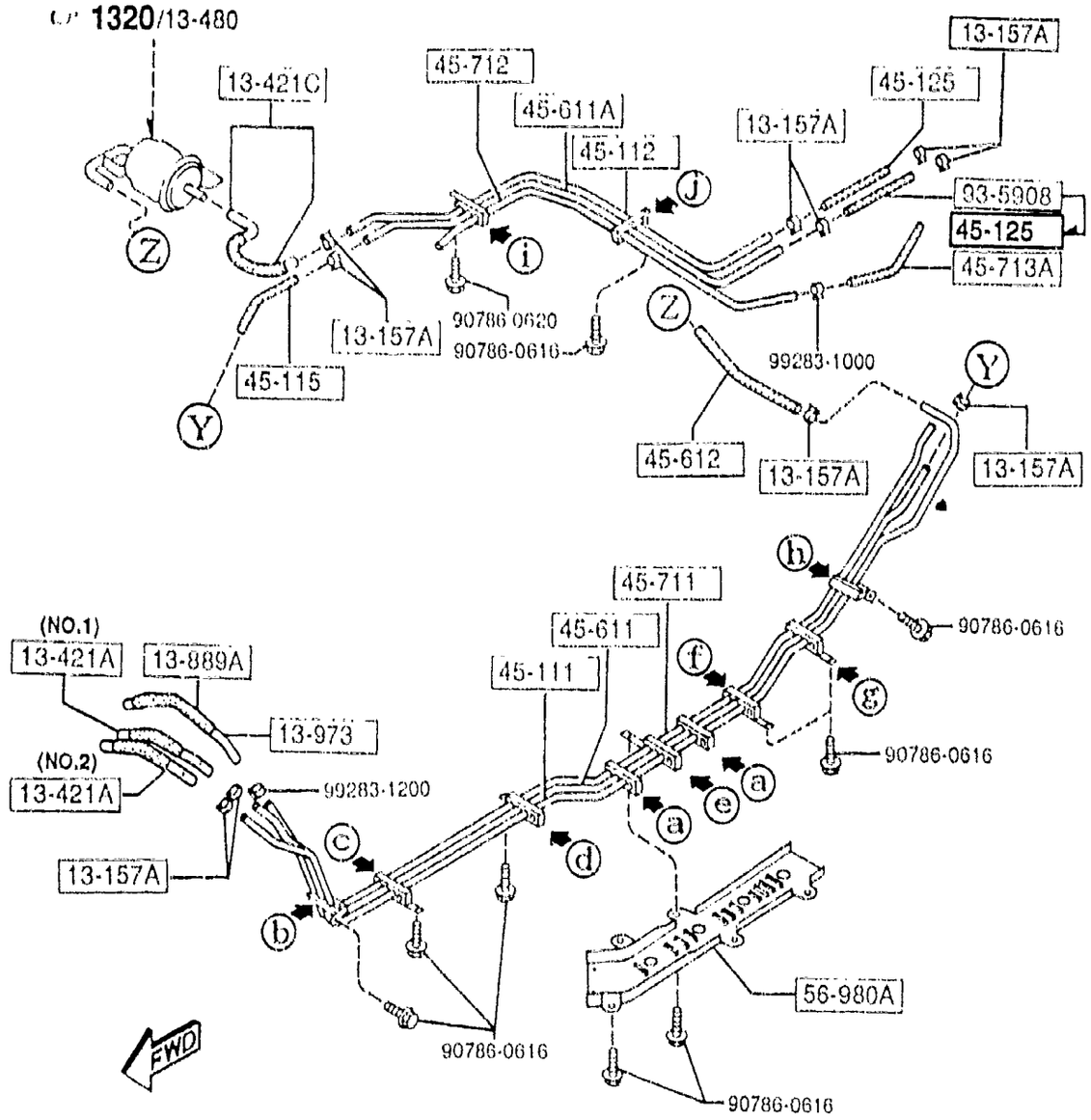

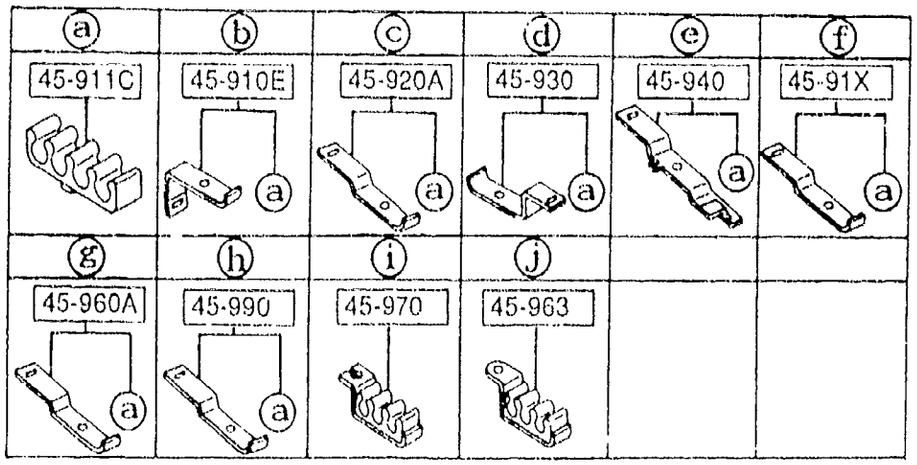

PART NO.	QTY	MODEL/RESTRICTION	MODEL/RESTRICTION	MODEL/RESTRICTION	FROM-TO
CONT'D					
FD01-45-711	1				
45-712		PIPE,EVAPORATOR			
FD01-45-712A	1				
45-713A		HOSE,FUEL			
FD01-45-713	1				
45-91X		HOLDER'E',PIPE-FUEL			
FD01-45-95X	1				
45-910E		HOLDER,PIPE			
FD01-45-910A	1				
45-911C		CLIP,PIPE			
FD01-45-911	9				
45-920A		HOLDER'B',PIPE			
FD01-45-920	1				
45-930		HOLDER'C',PIPE			
FD01-45-930	1				
45-940		HOLDER,PIPE			
FD01-45-940A	1				
45-960A		HOLDER'F',PIPE			
FD01-45-960	1				
45-963		HOLDER'J',PIPE			
FD01-45-980	1				
45-970		HOLDER'G',PIPE			
FD01-45-970	1				
45-990		HOLDER'K',PIPE-FUEL			
FD01-45-990	1				
56-980A		PROTECTOR,PIPE			
FD01-56-191A	1				

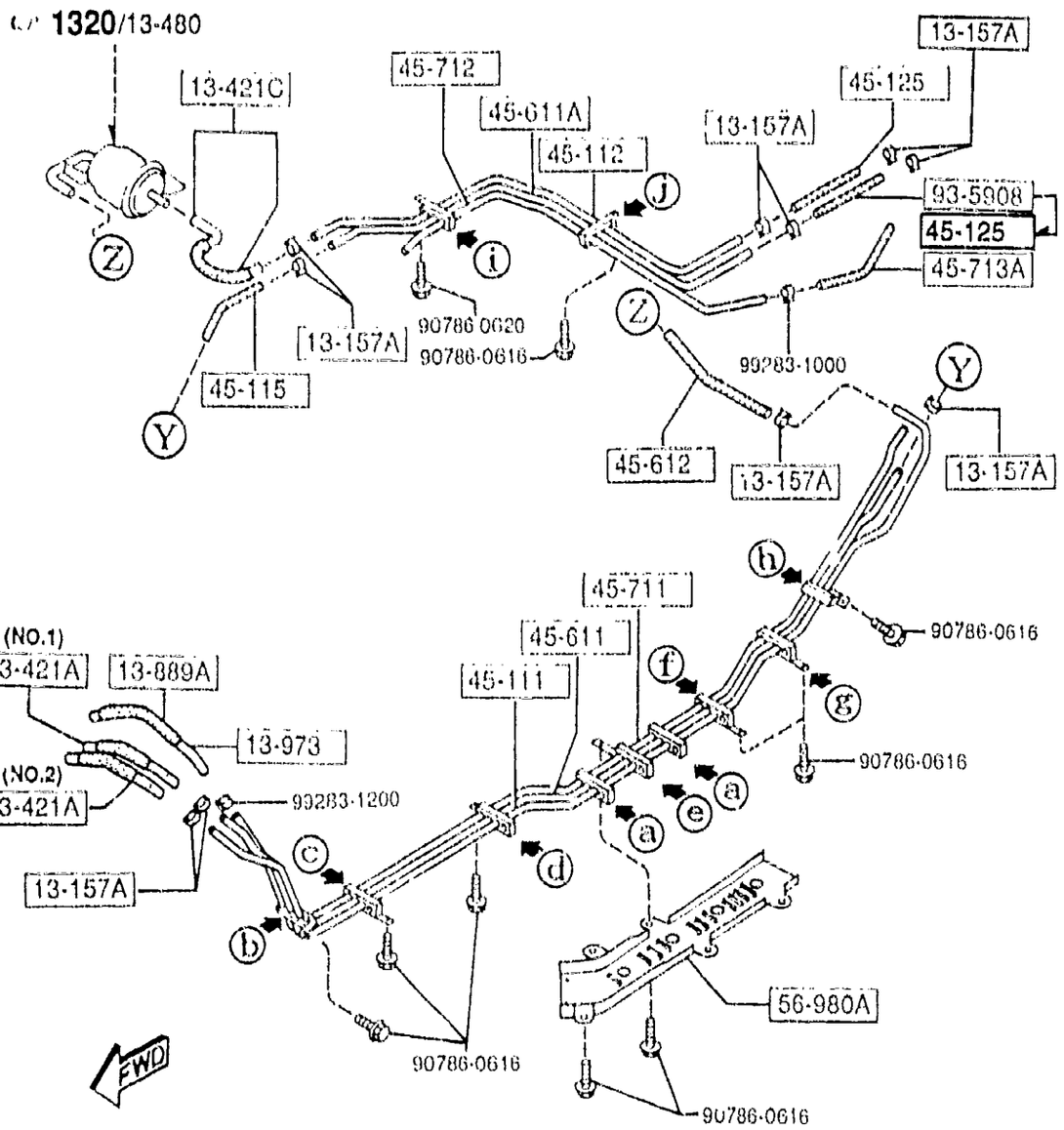

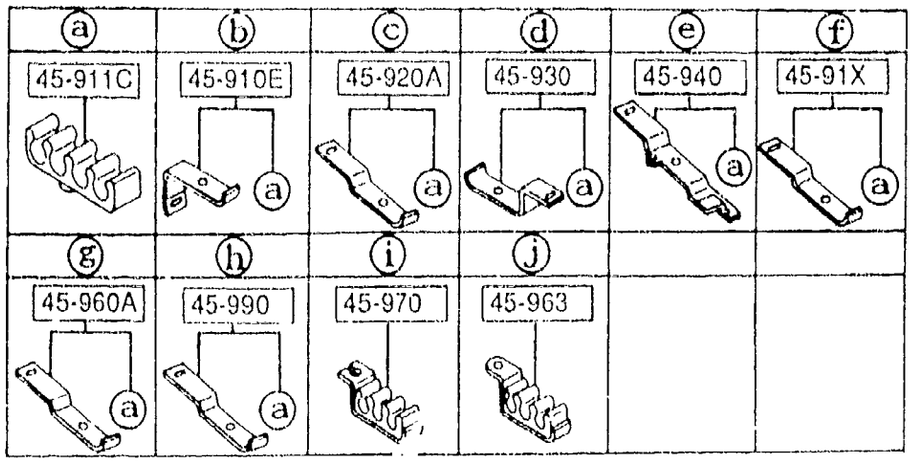

PART NO.	QTY	MODEL/RESTRICTION	MODEL/RESTRICTION	MODEL/RESTRICTION	FROM-TO
93-5908		HOSE			
99359-0815M	1				-5701

5701 FD333 -400230

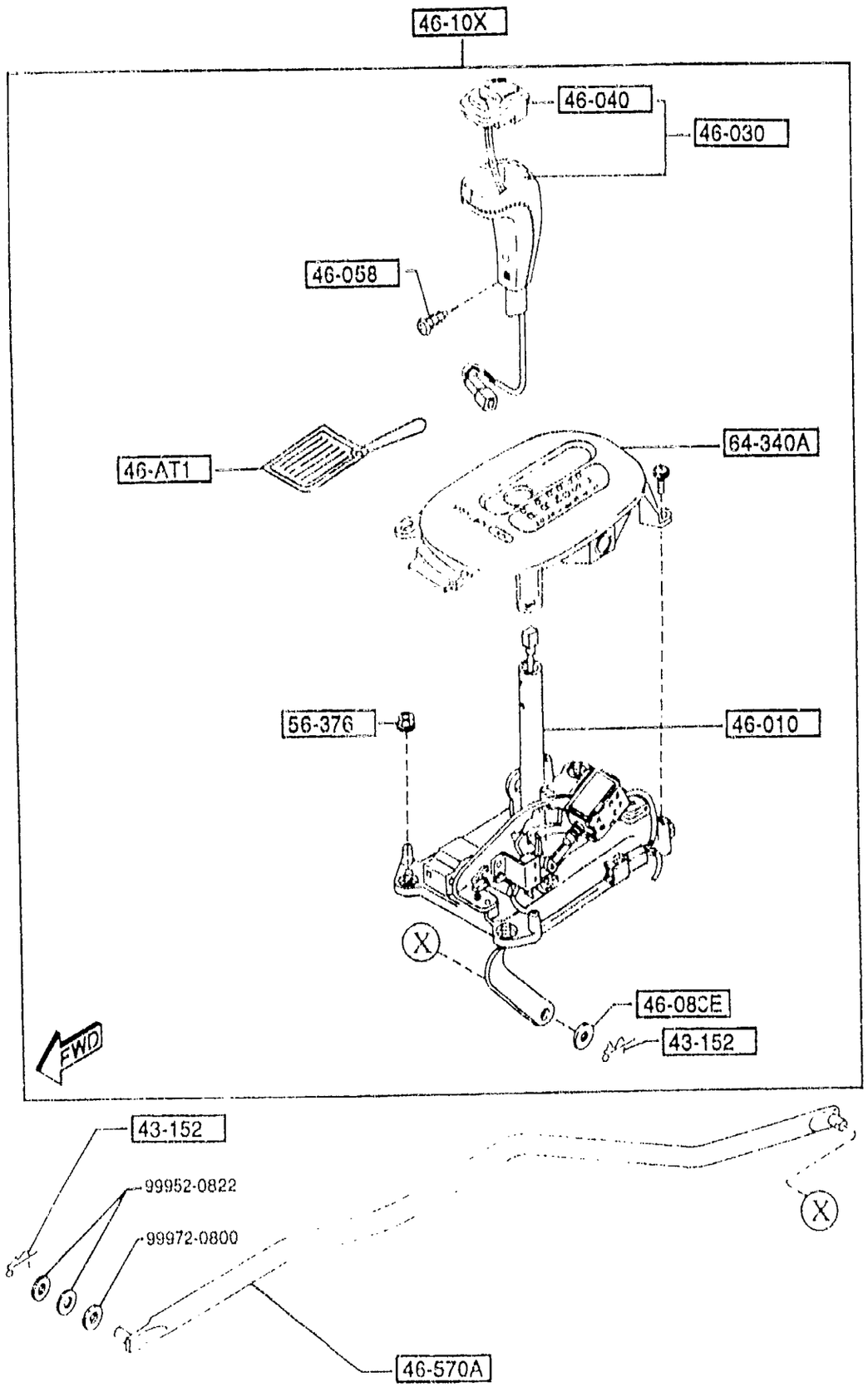

4600 -1 * CHANGE CONTROL SYSTEM (AT)

PART NO.	QTY	MODEL/RESTRICTION	MODEL/RESTRICTION	MODEL/RESTRICTION	FROM-TO
43-152 FB02-43-152A	2	PIN,SNAP			
46-AT1 FD02-46-AT1	1	TAG,CAUTION-CHANGE			-4A01
46-010 FD02-46-100C	1	LEVER,SELECT			
46-030 FD02-46-030	1	KNOB,CHANGE LEVER			
46-040 FC07-46-040A	1	SWITCH,OVER DRIVE CONTROL			-5901
*FD02-46-040	1				5901-
46-058 FD02-46-058	2	SCREW,CHANGE LEVER KNOB			
46-083E J001-46-051	1	WASHER			
46-10X FD02-46-10XE	1	CHANGE COMPLETE			
46-570A FD02-46-570A	1	ROD,SELECTOR-REAR			
56-376 B001-56-376	4	NUT,SELF LOCK			
64-340A FD02-64-350D	1	INDICATOR			

4A01 FD333 -400014
5901 FD333 -400232

CHASSIS

BODY

CHASSIS

BODY

CHASSIS

BODY

CHASSIS

BODY

CHASSIS

BODY

CHASSIS

BODY

CHASSIS

BODY

CHASSIS

BODY

CHASSIS

BODY

CHASSIS

BODY

CHASSIS

BODY

CHASSIS

BODY

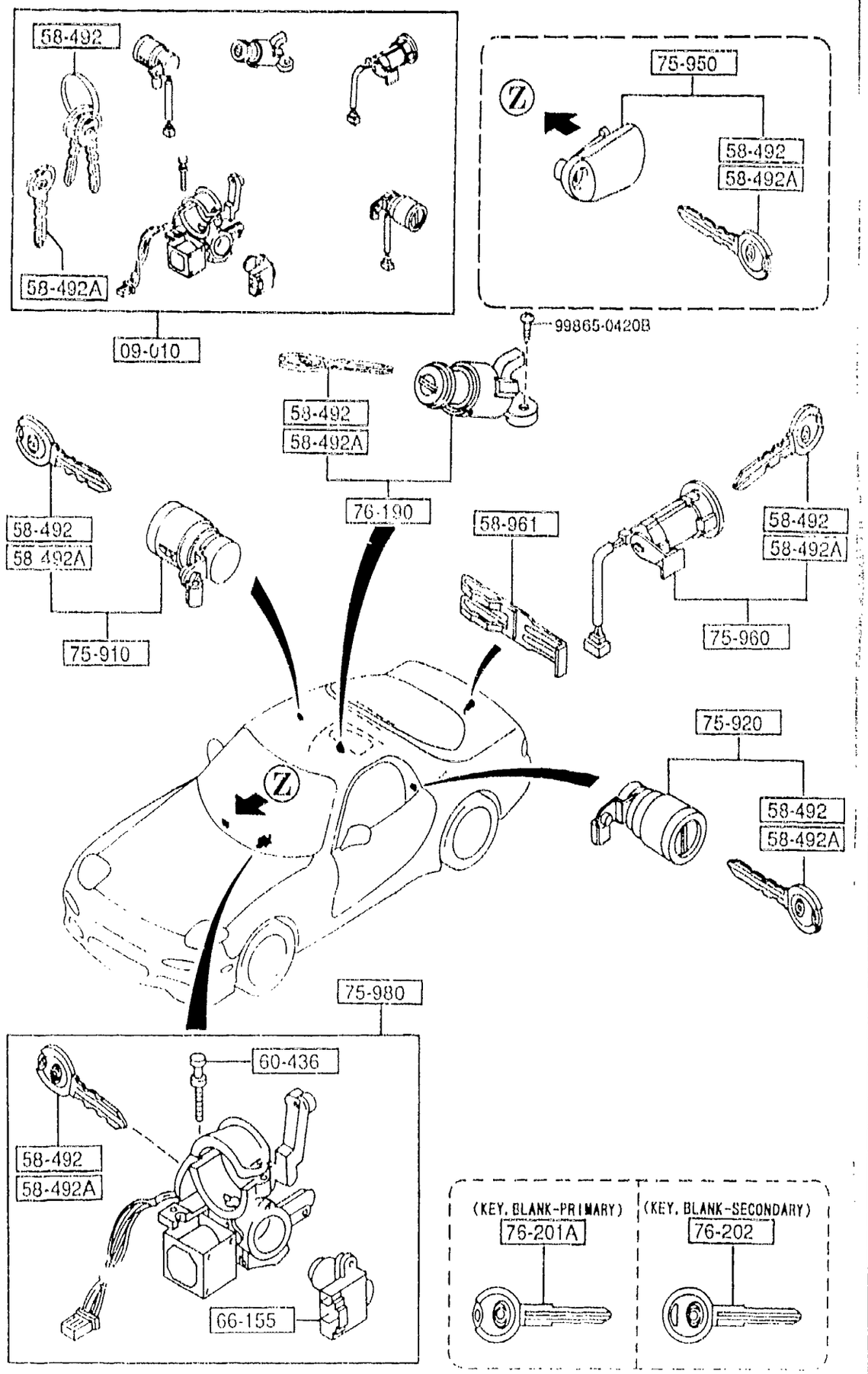

PART NO.	QTY	MODEL/RESTRICTION	MODEL/RESTRICTION	MODEL/RESTRICTION	FROM-TO
09-010		KEY SET			
FD15-09-010C A (FD15-09-010D)	1	(MT)			-5301
FD17-09-010C A (FD17-09-010D)	1	(AT)			-5301
FD15-09-010D AN(FD15-09-010E)	1	(MT)			5301-5508
FD17-09-010D AN(FD17-09-010E)	1	(AT)			5301-5508
FD15-09-010E	1	(MT)			5508-
FD17-09-010E	1	(AT)			5508-
58-492		KEY,PRIMARY			
FD01-58-492	2	KEY NO. IS REQUIRED			
58-492A		KEY,SECONDARY			
FD01-58-493	1	KEY NO. IS REQUIRED			
58-961		FASTENER,KEY CYL.			
GJ21-56-902A	1				
60-436		BOLT,SET			
H043-66-154	2				
66-155		SWITCH,IGNITION			
FD01-66-151 A (FD01-66-151A)	1				-5301
FD01-66-151A	1				5301-
75-910		KEY SUB SET(R),DOOR			
FD01-76-210B	1				-5301
FD01-76-210C	1				5301-5801
FD01-76-210D	1				5801-
75-920		KEY SUB SET(L),DOOR			
FD01-76-220B	1				-5301
FD01-76-220C	1				5301-5801
FD01-76-220D	1				5801-

5301 FD333 -400027
5508 FD333 -400229
5801 FD333 -400231

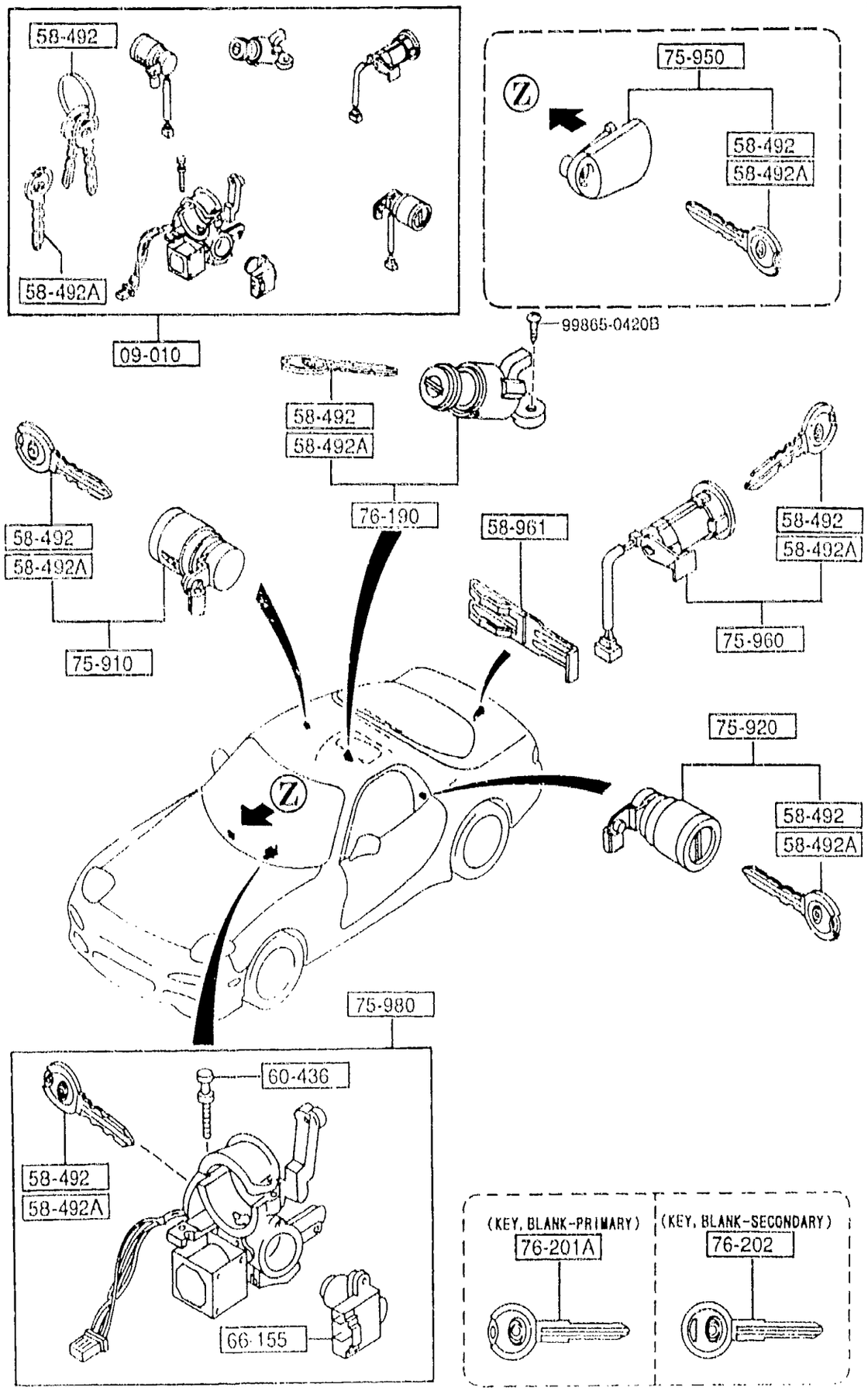

0900 -2 * KEY SETS

PART NO.	QTY	MODEL/RESTRICTION	MODEL/RESTRICTION	MODEL/RESTRICTION	FROM-TO
75-950		KEY SUB SET,GLOVE			
FD15-76-250A	1				-5301
FD15-76-250B	1				5301-
75-960		KEY SUB SET,LIFT GATE			
FD01-76-260	1				-5301
FD01-76-260A	1				5301-5801
FD01-76-260B	1				5801-
75-980		KEY SUB SET,IG.SWICH			
FD01-76-290	1	(MT)			-5301
FD02-76-290	1	(AT)			-5301
FD01-76-290B	1	(MT)			5301-
FD02-76-290B	1	(AT)			5301-
76-190		KEY SUB SET,STOWAGE			
FD01-76-190	1				-5301
FD01-76-190A	1				5301-
76-201A		KEY,BLANK-PRIMARY			
FD01-76-201	1				-5301
BOYA-76-201	1				5301-
76-202		KEY,BLANK-SECONDARY			
FD01-76-202	1				-5301

5301 FD333 -400027
5801 FD333 -400230

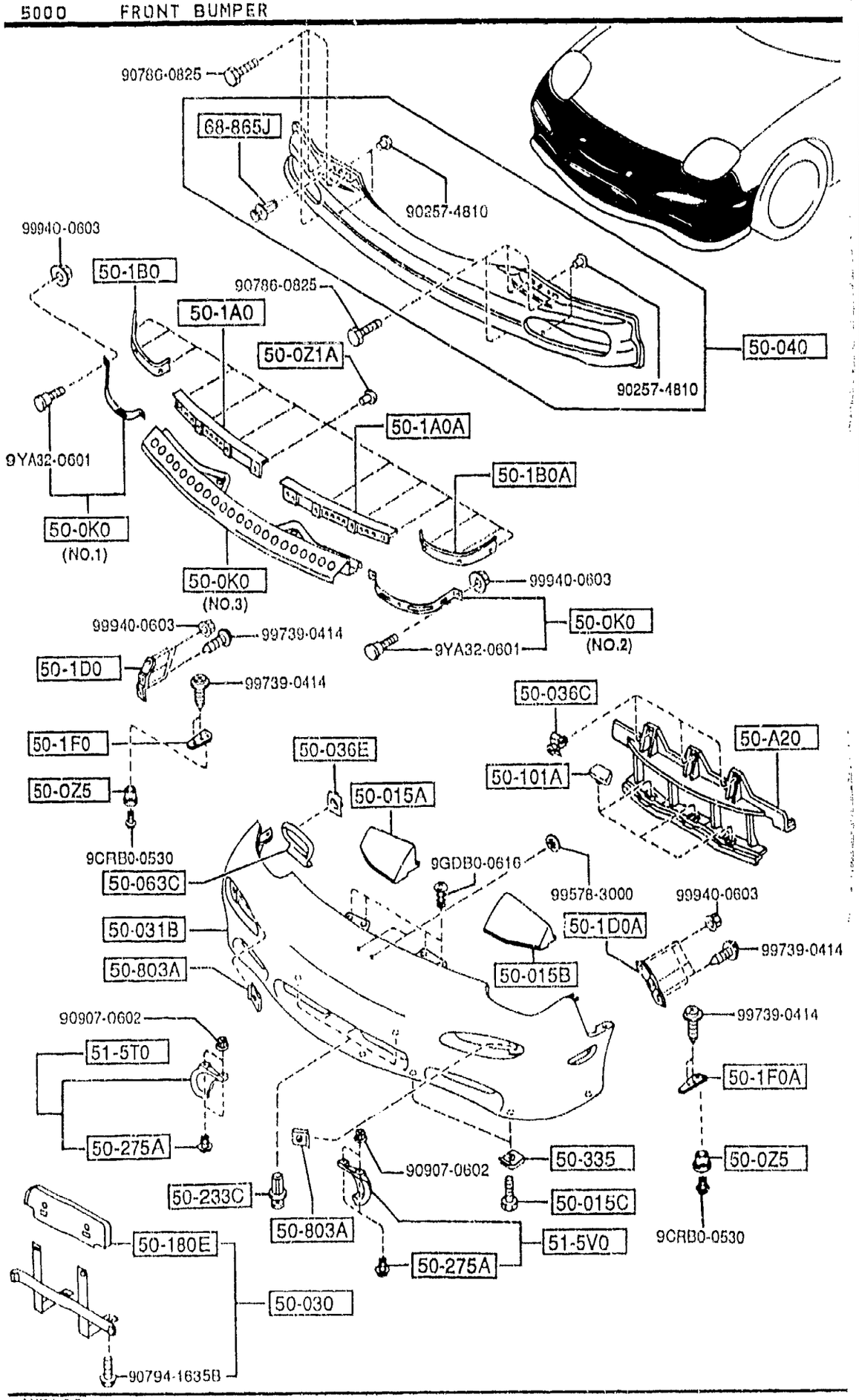

AUFA06

PART NO.	QTY	MODEL/RESTRICTION	MODEL/RESTRICTION	MODEL/RESTRICTION	FROM-TO
50-A20		GUIDE,AIR			
FD01-50-A21	1				
50-0K0		RETAINER,FASCIA			
FD01-50-0KXA	1	(ILLUST. NO.1)			
FD01-50-0K0A	1	(ILLUST. NO.2)			
FD01-50-0K1B	1	(ILLUST. NO.3)			
50-0Z1A		RIVET,BLIND			
BR70-50-0Z1	13				
50-0Z5		GROMMET,SCREW			
FD01-50-0Z5	2				
50-015A		SPACER			
FD01-50-CR0	1				
50-015B		SPACER			
FD01-50-CS0	1				
50-015C		BOLT			
BR70-50-0Z2	4				
50-030		HOLDER,NO. PLATE			
FD01-50-170B	1				
50-031B		FACE,FRONT BUMPER			
FD01-50-031C	1	PAINT TO MATCH			
50-036C		FASTENER			
BF67-50-033	3				
50-036E		CLIP			
GJ21-50-049	2	((MT)>(NOR. SUSP))			
50-040		REINFORCEMENT,BUMPER			
FD01-50-070B	1				
50-063C		COVER(R),BUMPER			
FD01-51-3G5	1	((MT)>(NOR. SUSP))			

5000 FRONT BUMPER

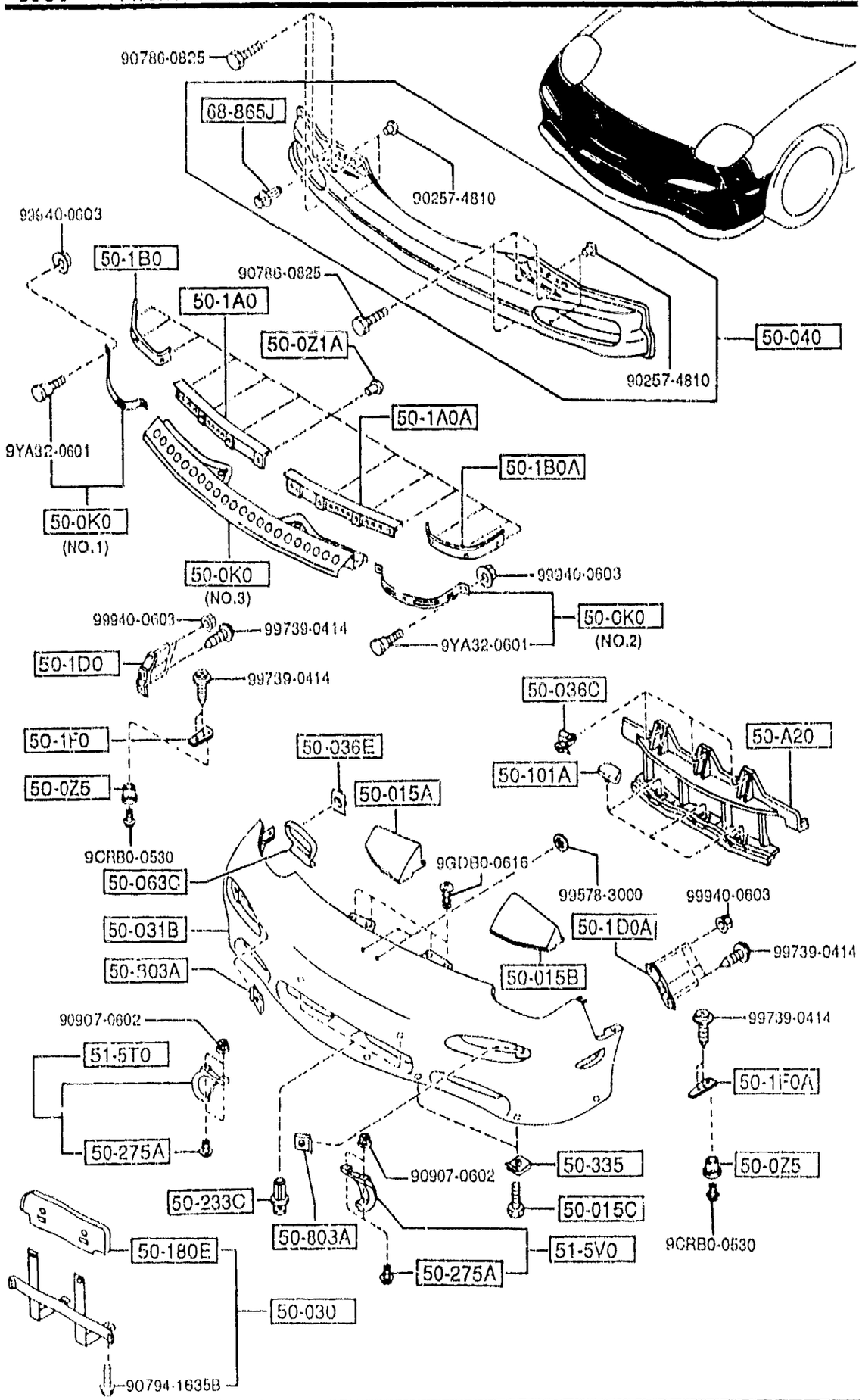

AUFA06

PART NO.	QTY	MODEL/RESTRICTION	MODEL/RESTRICTION	MODEL/RESTRICTION	FROM-TO
50-1A0		PLATE NO.1(R),SET-F.			
FD01-50-1AYB	1				
50-1A0A		PLATE NO.1(L),SET-F.			
FD01-50-1AXB	1				
50-1B0		PLATE NO.2(R),SET-F. BUMPER			
FD01-50-1B0A	1				
50-1B0A		PLATE NO.2(L),SET-F. BUMPER			
FD01-50-1C0A	1				
50-1D0		PLATE NO.3(R),SET-F. BUMPER			
FD01-50-1D0	1				
50-1D0A		PLATE NO.3(L),SET-F. BUMPER			
FD01-50-1E0	1				
50-1F0		PLATE NO.4(R),SET-F. BUMPER			
FD01-50-1G1	1				
50-1F0A		PLATE NO.4(L),SET-F. BUMPER			
FD01-50-1F1	1				
50-101A		COVER,GRILLE			
NA01-50-101A	3				
50-180E		PROTECTOR,NO. PLATE			
FB01-50-144	1				
50-233C		FASTENER,REAR BUMPER			
BF82-50-233	2				
50-275A		SCREW			
D001-50-222	4	(W/O SUN ROOF)			
50-335		NUT,CLIP			
FB01-50-133C	10				
50-803A		NUT,SIDE PROTECTOR			
G158-50-803	2				

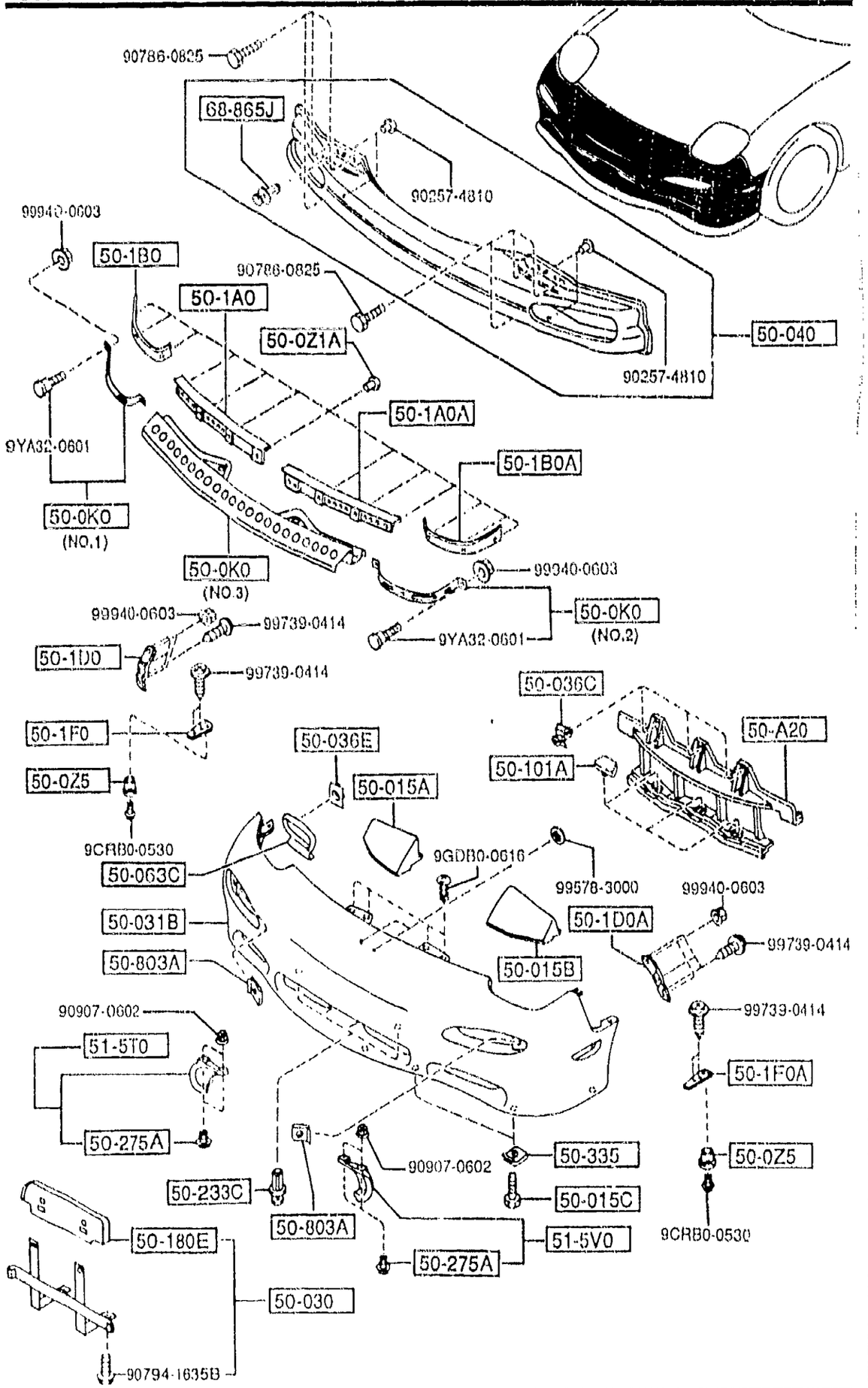

AUFA06

5000 -3 * FRONT BUMPER

PART NO.	QTY	MODEL/RESTRICTION	MODEL/RESTRICTION	MODEL/RESTRICTION	FROM-TO
51-5T0		COVER(R),BUMPER			
FD01-51-5T0	1	(W/O SUN ROOF)			
51-5V0		COVER(L),BUMPER			
FD01-51-5V0	1	(W/O SUN ROOF)			
68-865J		FASTENER,TRK.S.TRIM			
B103-68-865	1				

CAT. AUFA06-04

1997-01

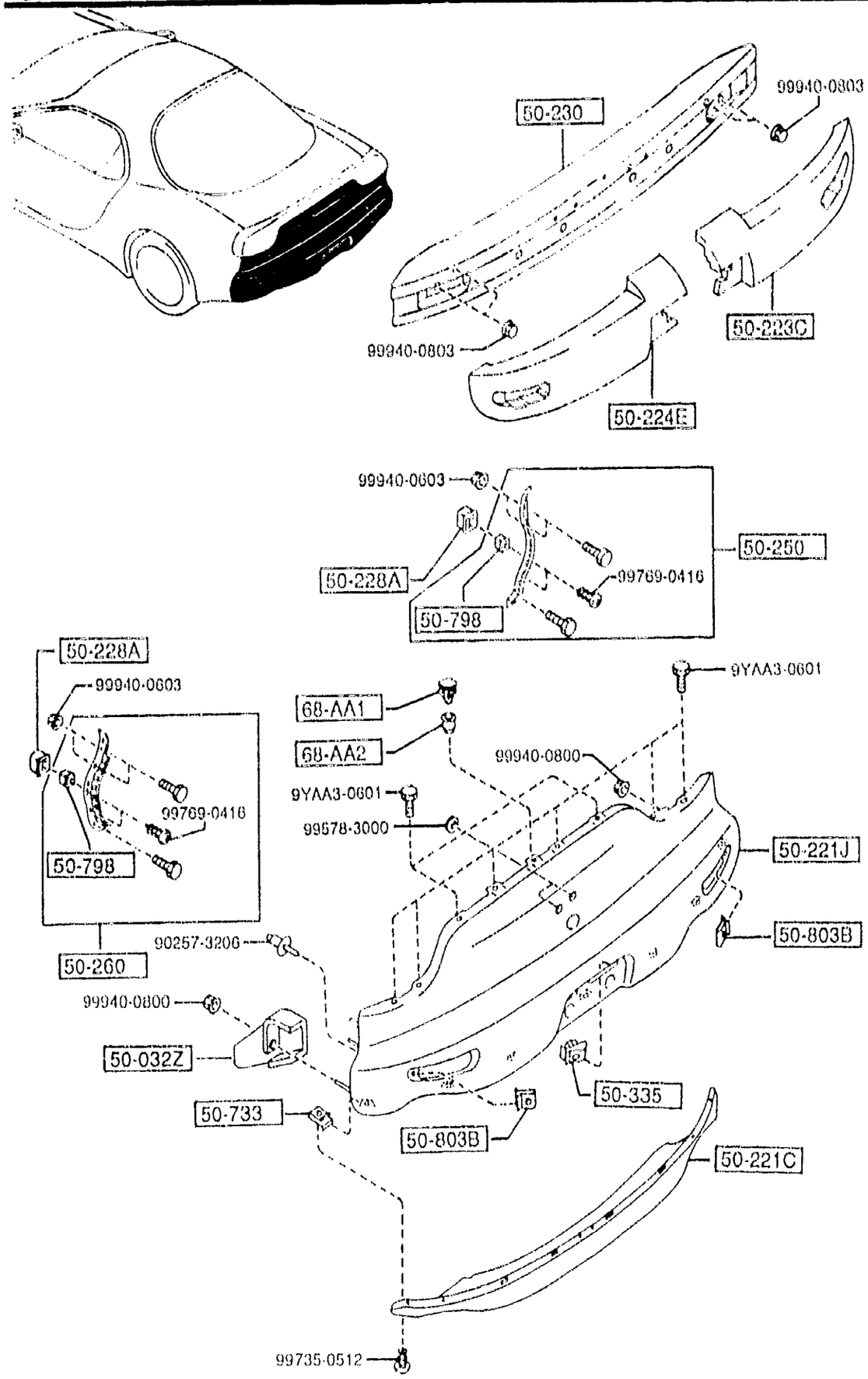

PART NO.	QTY	MODEL/RESTRICTION	MODEL/RESTRICTION	MODEL/RESTRICTION	FROM-TO
50-032Z FD01-50-1J1	1	PROTECTOR(L)			
50-221C FD01-50-231A	1	BUMPER,REAR LOWER PAINT TO MATCH			
50-221J FD01-50-221B	1	BUMPER,REAR PAINT TO MATCH			
50-223C FD07-50-31X	1	FOAM(R),ENGY.ABS.-RR BUMP			
50-224E FD07-50-31Y	1	FOAM(L),ENGY.ABS.-RR BUMP			
50-228A FD01-50-AF5	4	GROMMET			
50-230 FD01-50-260A	1	REINFORCEMENT,BUMPER			
50-250 FD01-50-3A0	1	BRACKET(R),RR.BUMPER			
50-260 FD01-50-3B0	1	BRACKET(L),RR.BUMPER			
50-335 FB01-50-133C	2	NUT,CLIP			
50-733 FB01-50-733	7	NUT,SPRING-AIR DAM SKIRT			
50-798 FD01-50-799	4	SCREW,GROMMET			
50-803B FD01-50-803	2	NUT,SPRING			

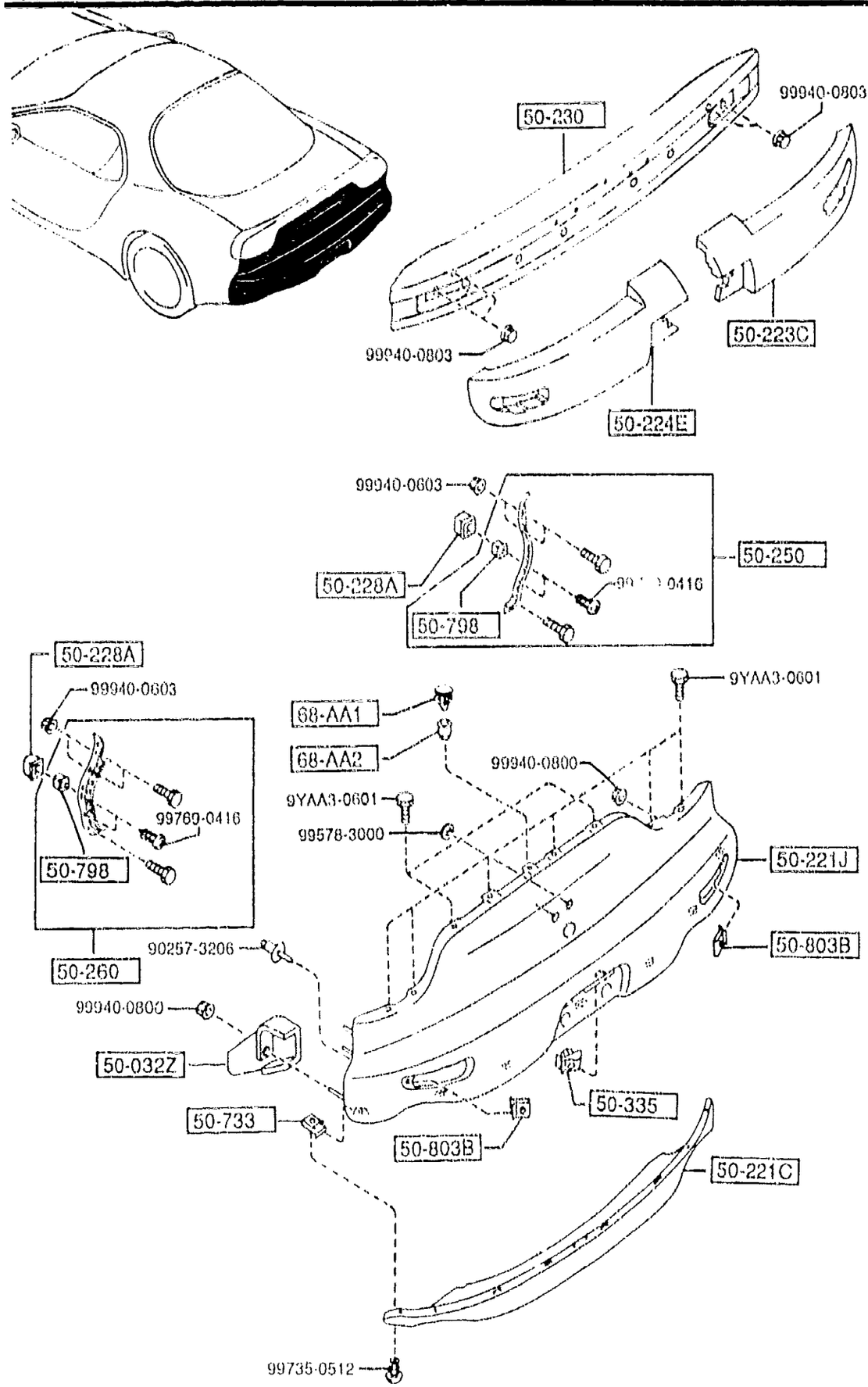

PART NO.	QTY	MODEL/RESTRICTION	MODEL/RESTRICTION	MODEL/RESTRICTION	FROM-TO
68-AA1		FASTENER			
LA10-68-AA1	1				
68-AA2		FASTENER,SEAL-TRIM			
LA10-68-AA2	1				

5030 WINDOW MOULDINGS

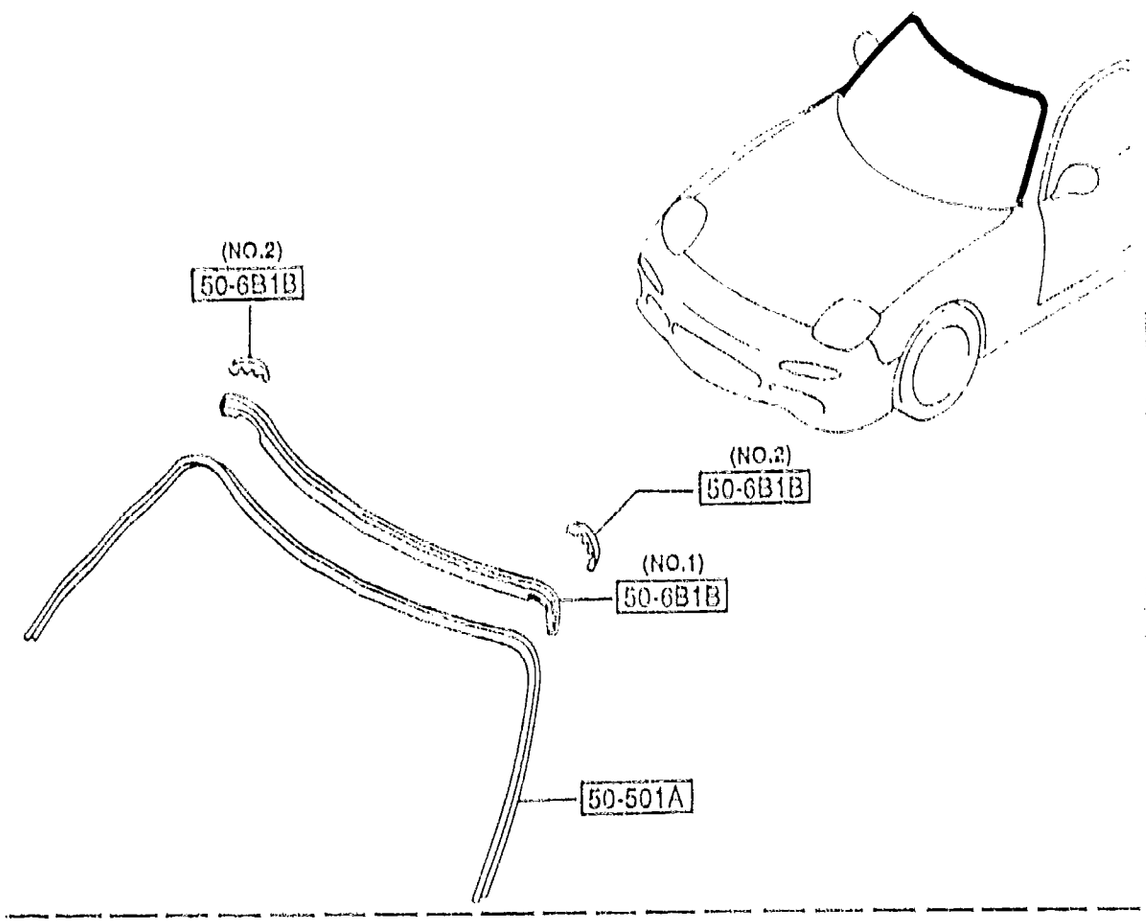

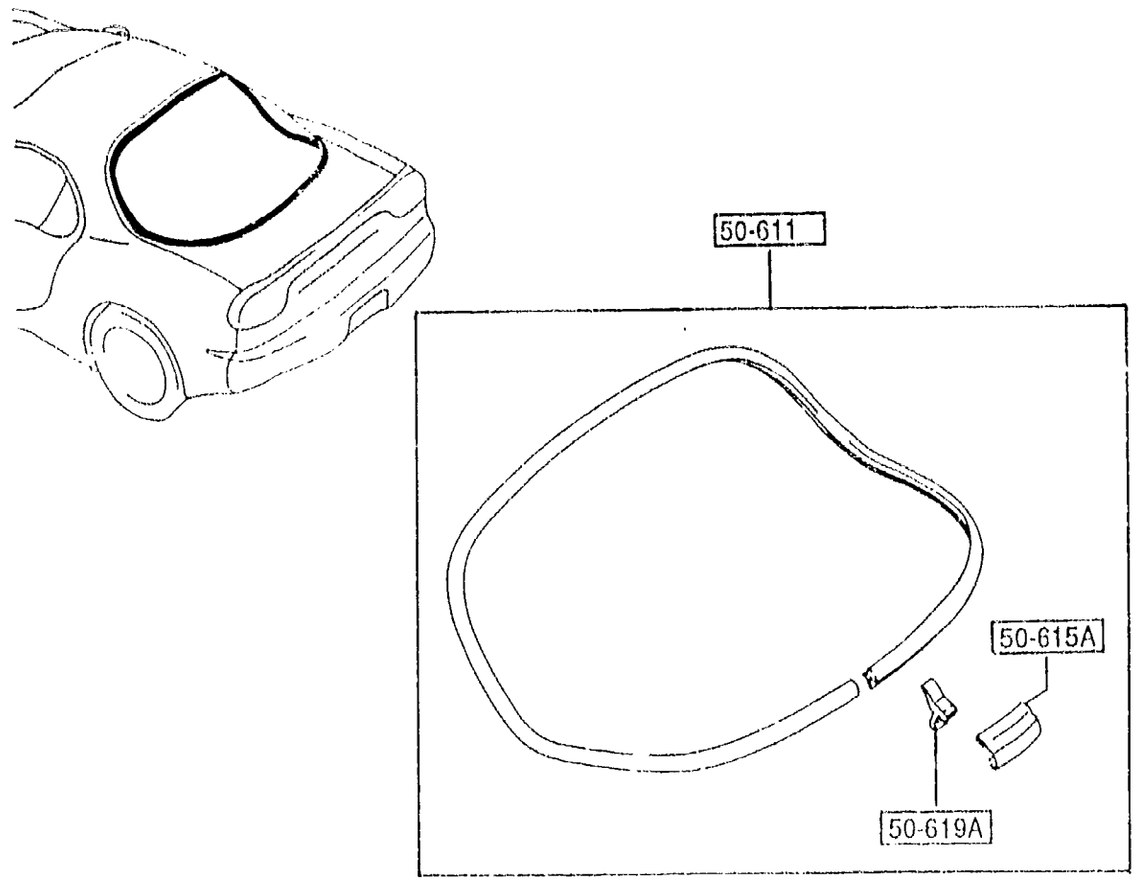

PART NO.	QTY	MODEL/RESTRICTION	MODEL/RESTRICTION	MODEL/RESTRICTION	FROM-TO
50-501A		MOULD(UP),FRT.WINDOW			
FD01-50-6AXB	1				
50-6B1B		PROTR,MOULD-FRT WINDOW			
NA01-50-6B1	1	(ILLUST. NO.1)			
NA01-50-6B2	2	(ILLUST. NO.2)			
50-611		MOULD,RR.WINDOW			
FD01-50-6G0B	1				
50-615A		JOINT,BACK WINDOW MOULD			
FD01-50-615	1				
50-619A		CLIP,RR.WINDOW MOULD			
FD01-50-619A	1				

5040 -1 * BODY MOULDINGS

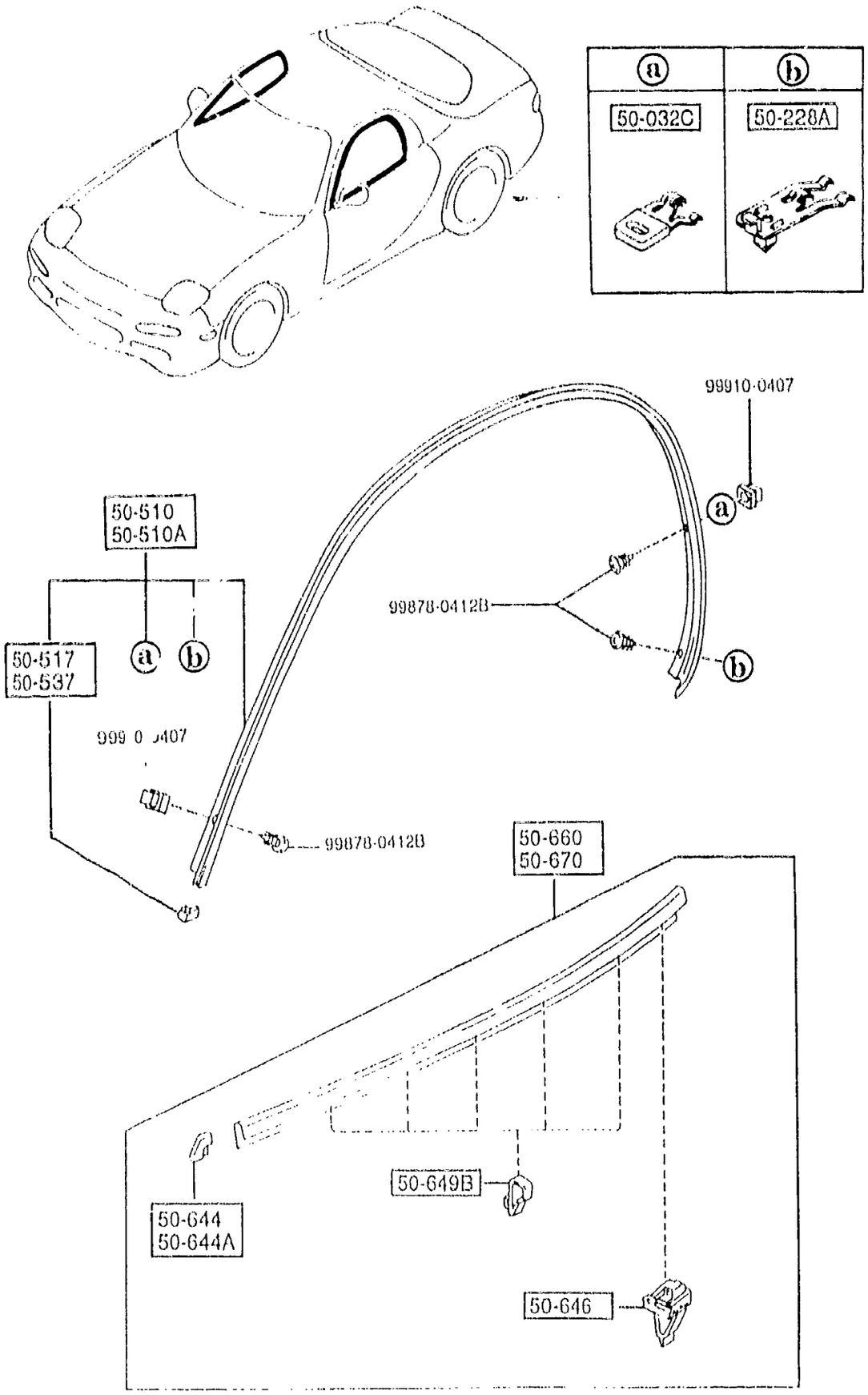

PART NO.	QTY	MODEL/RESTRICTION	MODEL/RESTRICTION	MODEL/RESTRICTION	FROM-TO
50-032C FD01-50-538A	2	GROMMET			
50-228A FD01-50-539A	2	GROMMET			
50-510 FD01-50-510E	1	MOULD(R),DRIP			
50-510A FD01-50-530E	1	MOULD(L),DRIP			
50-517 FD01-50-516A	1	PROTECTOR(R),DRIP MLDG			
50-537 FD01-50-536A	1	PROTECTOR(L),DRIP MLDG			
50-644 FD01-50-644A	1	PROTECTOR'A'(R),BELTLINE			
50-644A FD01-50-654A	1	PROTECTOR'A'(L),BELTLINE			
50-646 FD01-50-646B	2	CLIP,BELTLINE MOULD			
50-649B FD01-50-649A	10	CLIP'A',BELTLINE MOULD			
50-660 FD01-50-640D	1	MOULD(R),BELTLINE			
50-670 FD01-50-650D	1	MOULD(L),BELTLINE			

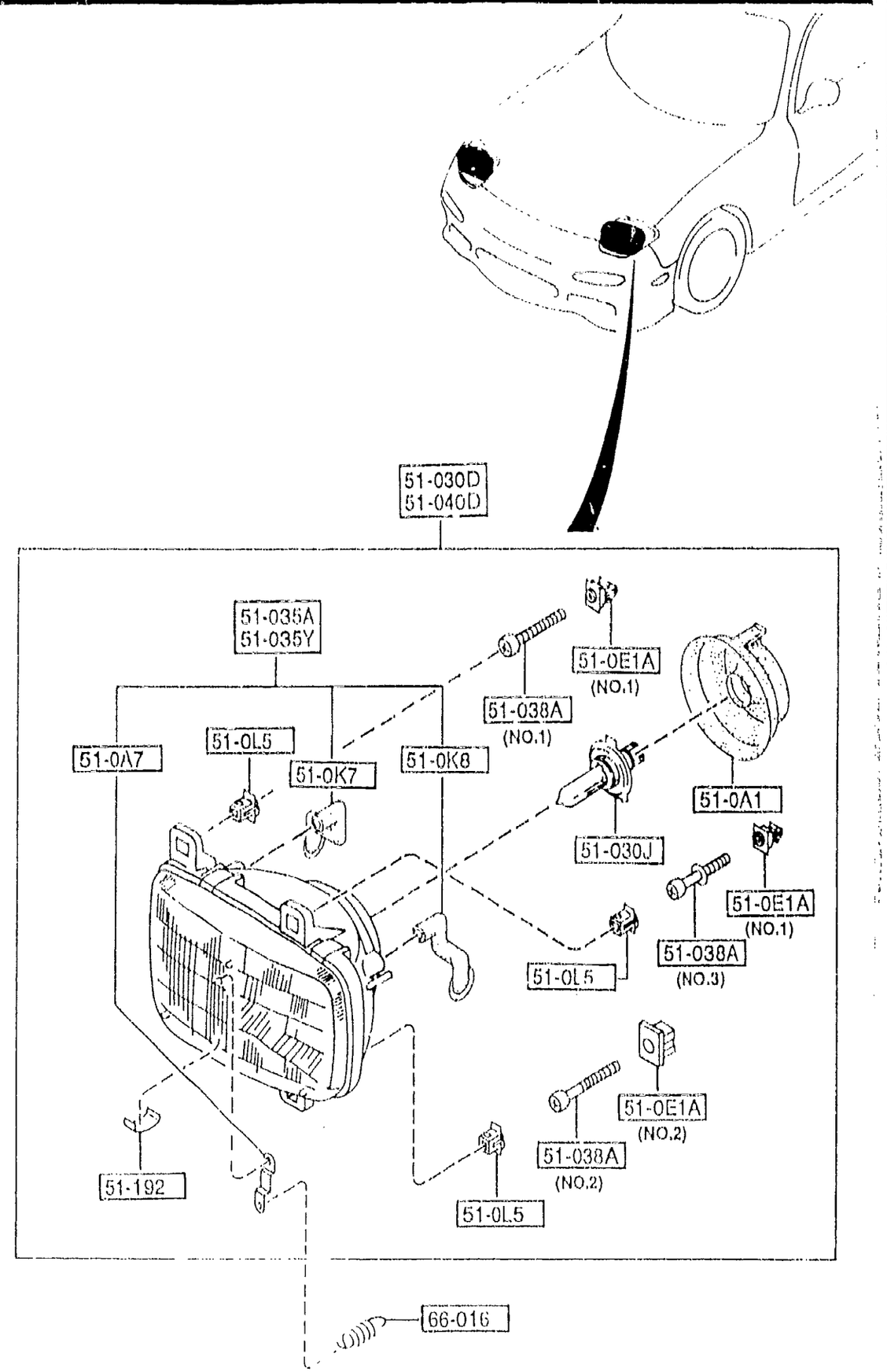

5100 -1 HEAD LAMPS

PART NO.	QTY	MODEL/RESTRICTION	MODEL/RESTRICTION	MODEL/RESTRICTION	FROM-TO
51-0A1		COVER,SOCKET-HEAD LAMP			
FD01-51-0A1	2				
51-0A7		BRACKET,HEAD LAMP			
FD01-51-0B7	2				
51-0E1A		FASTENER,LAMP			
BR70-51-0E1	4	(ILLUST. NO.1)			
FD01-51-025	2	(ILLUST. NO.2)			
51-0K7		TUBE,HEAD LAMP			
FD01-51-0K7	2				
51-0K8		TUBE,HEAD LAMP			
FD01-51-0K8	2				
51-0L5		BEARING,HEAD LAMP			
FD01-51-0L5	6				-4A01
BR70-51-0K3	6				4A01-
51-030D		LAMP(R),HEAD			
FD01-51-030D	1				
51-030J		BULB			
99703-8605	2	12V 60/55W			
51-035A		UNIT(R),HEAD LAMP			
FD01-51-0K0D	1				
51-035Y		UNIT(L),HEAD LAMP			
FD01-51-0L0D	1				
51-038A		SCREW,ADJUST			
FD01-51-037	2	(ILLUST. NO.1)			
FD01-51-047	2	(ILLUST. NO.3)			
FD02-51-037	2	(ILLUST. NO.2)			-4A01
BM89-51-037	2	(ILLUST. NO.2)			4A01-
51-040D		LAMP(L),HEAD			

4A01 FD333 -400014

5100 HEAD LAMPS

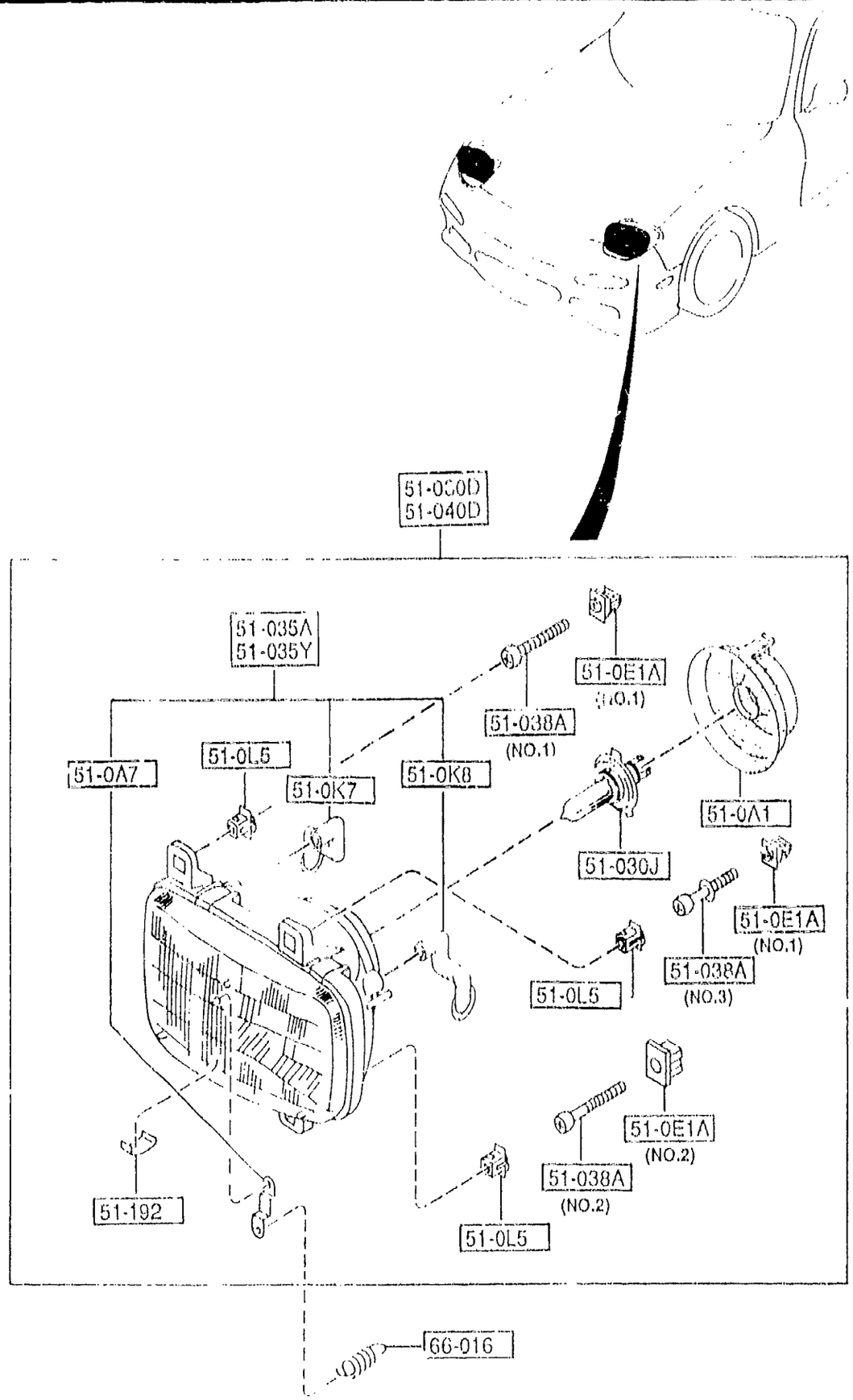

PART NO.	QTY	MODEL/RESTRICTION	MODEL/RESTRICTION	MODEL/RESTRICTION	FROM-TO
CONT'D					
FD01-51-040D	1				
51-192		CLIP			
B455-51-0A6	8				
66-016		SPRING,ADJUST			
FC42-51-036	2				

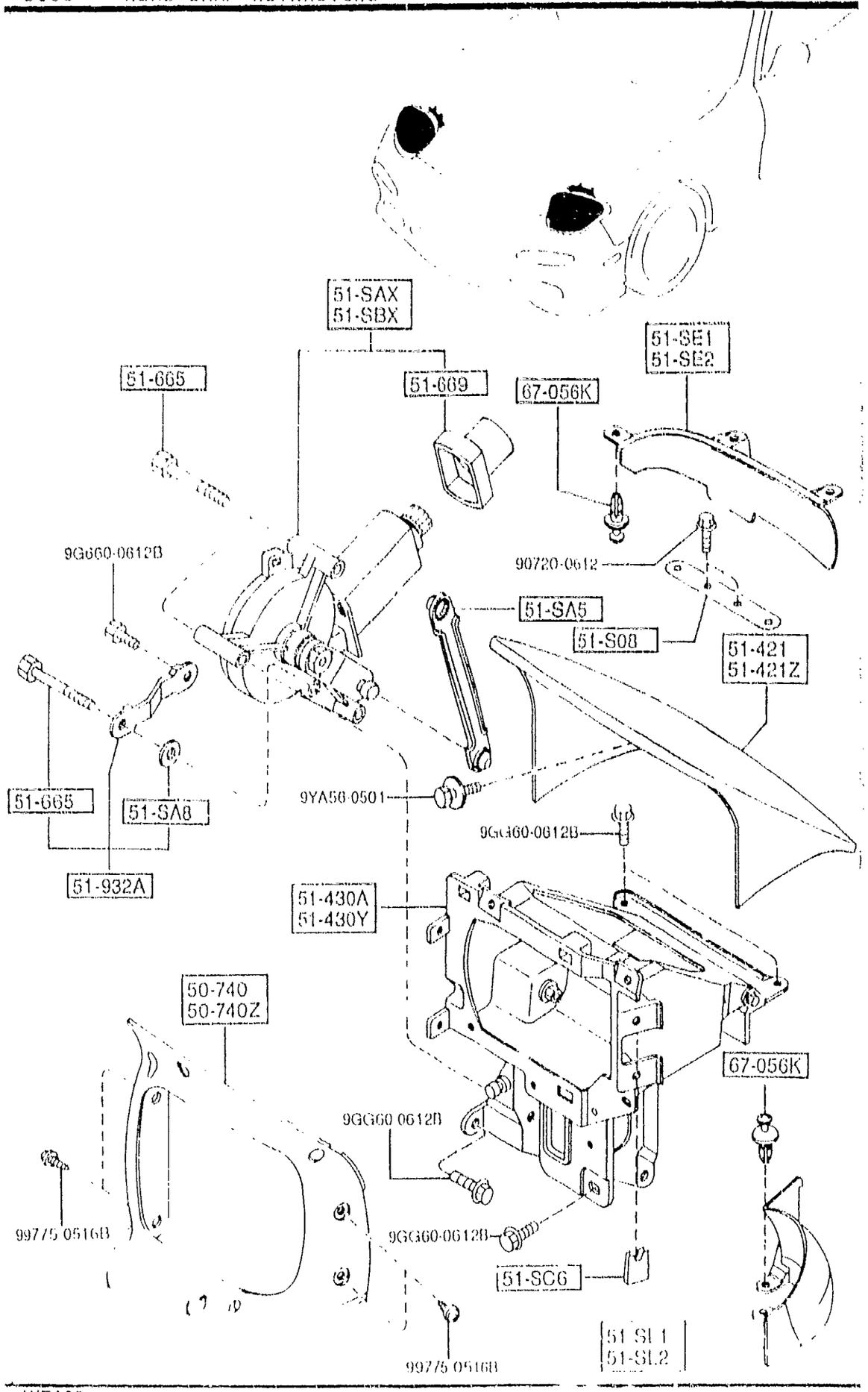

PART NO.	QTY	MODEL/RESTRICTION	MODEL/RESTRICTION	MODEL/RESTRICTION	FROM TO
50-740		BEZEL(R),LAMP			
FD01-50-741C	1	(W/O HEAD LAMP CLEANER)			
50-740Z		BEZEL(L),LAMP			
FD01-50-751C	1	(W/O HEAD LAMP CLEANER)			
51-SAX		MOTOR(R),RETRACTABLE HEAD			
FD01-51-SAXB	1				
51-SA5		ROD,RETRACTABLE			
FD01-51-SA5	2				
51-SA8		WASHER			
NA01-51-SA8	2				
51-SBX		MOTOR(L),RETRACTABLE HEAD			
FD01-51-SBXB	1				
51-SC6		NUT,STOPPER-LAMP HINGE			
FD01-69-276A	6				
51-SE1		PROTECTOR(R),RETRA H/L			
FD01-51-SE1A	1				
51-SE2		PROTECTOR(L),RETRA. H/L			
FD01-51-SE2A	1				
51-SL1		PROTECTOR(R),FENDER			
FD01-51-SL1A	1				
51-SL2		PROTECTOR(L),FENDER			
FD01-51-SL2A	1				
51-S08		PLATE,RETRACTABLE			
FD01-51-S08A	2				
51-421		LID(R),LAMP			
FDY2-51-SH1	1				

5103 HEAD LAMP RETRACTORS

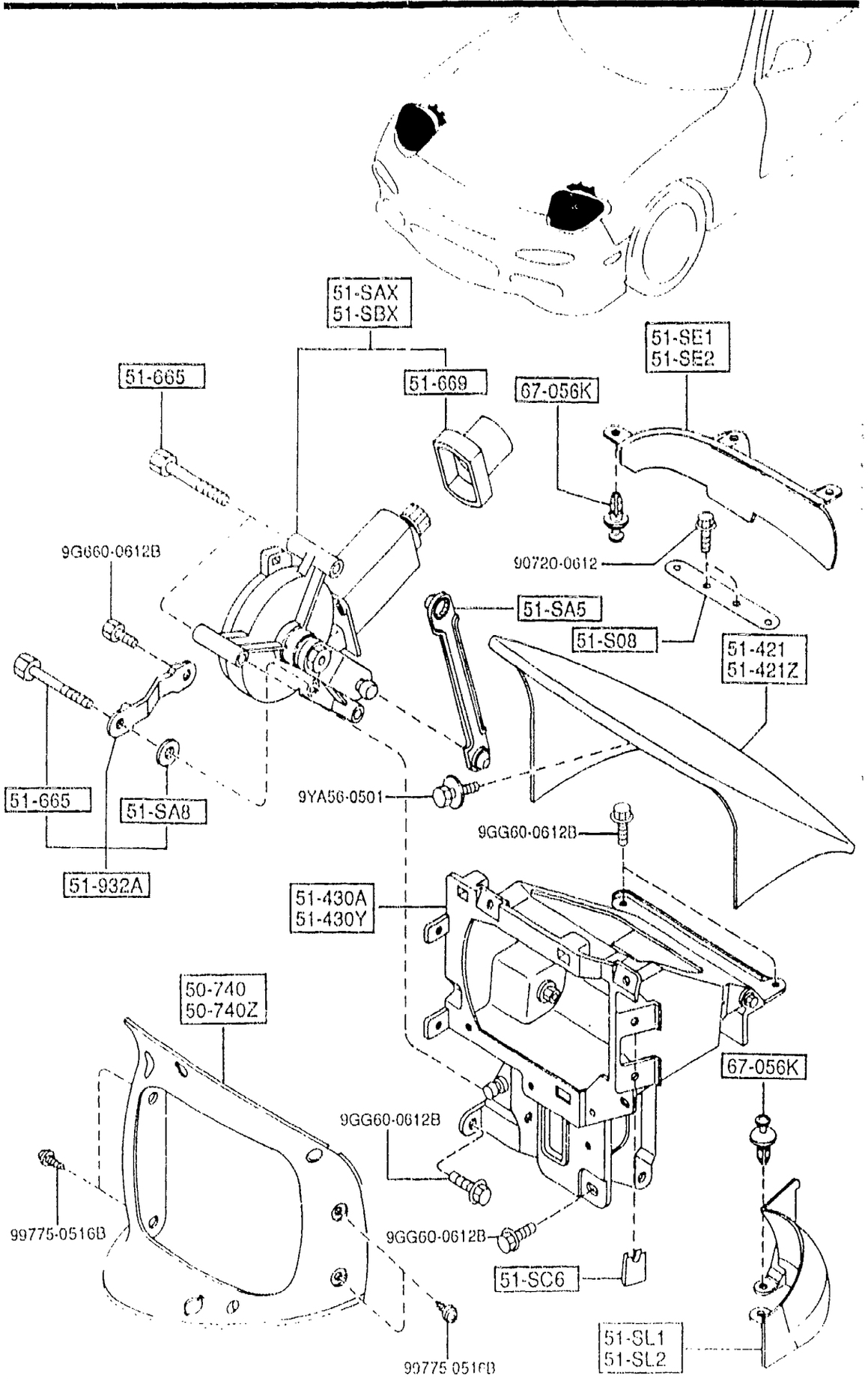

PART NO.	QTY	MODEL/RESTRICTION	MODEL/RESTRICTION	MODEL/RESTRICTION	FROM-TO
51-421Z FDY2-51-SH2	1	LID(L),LAMP			
51-430A FD01-51-SC0D	1	HINGE(R),LID-LAMP			
51-430Y FD01-51-SD0D	1	HINGE(L),LID-LAMP			
51-665 FB01-51-665	6	BOLT,MOTOR-RETRACT H/LAMP			
51-669 NA01-51-669	2	BOOT,MOTOR-RETRACT H/L			
51-932A FD01-51-S1Y	2	BRACKET,MOTOR			
67-056K UB39-50-795	10	RIVET			

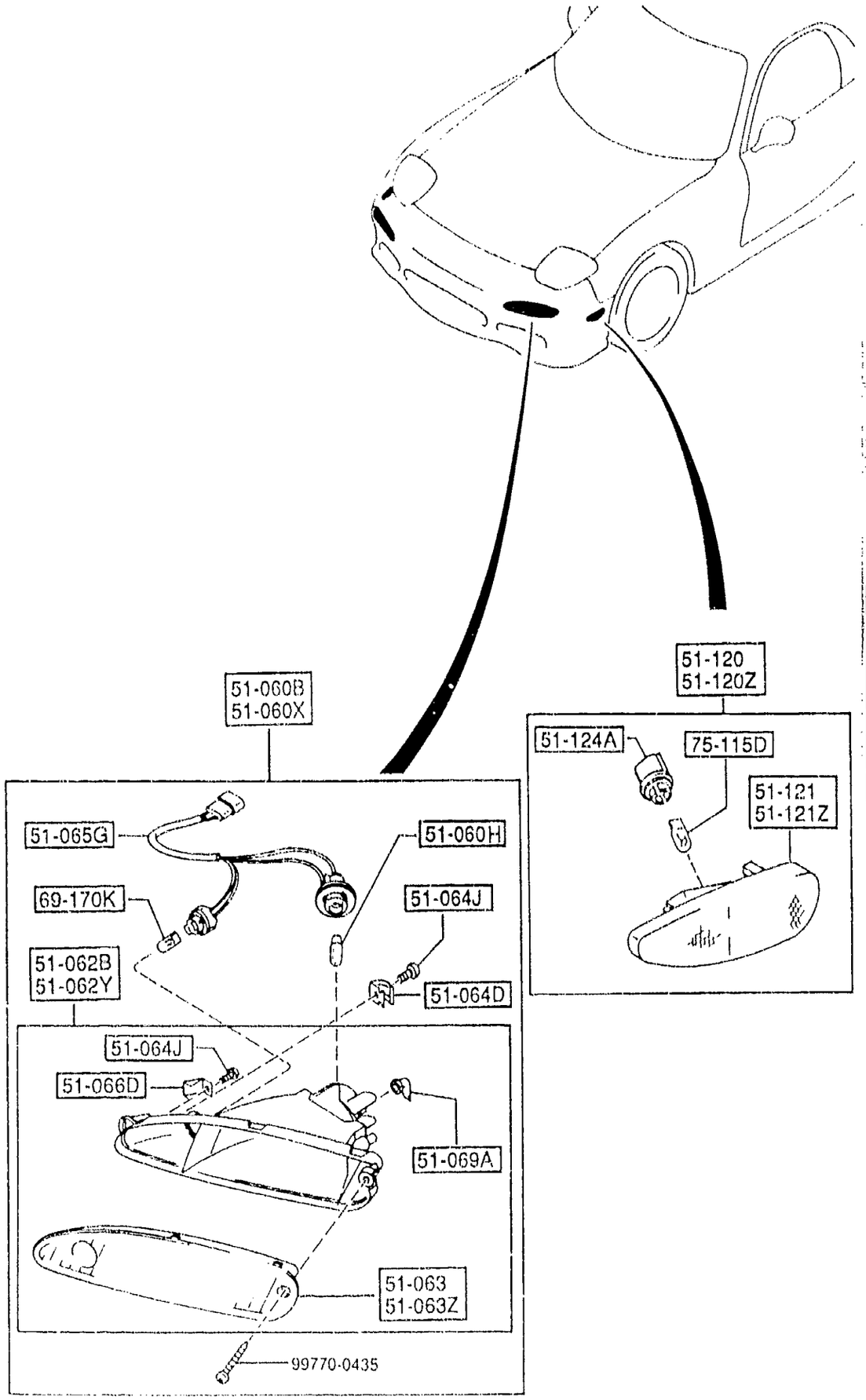

AUFA06

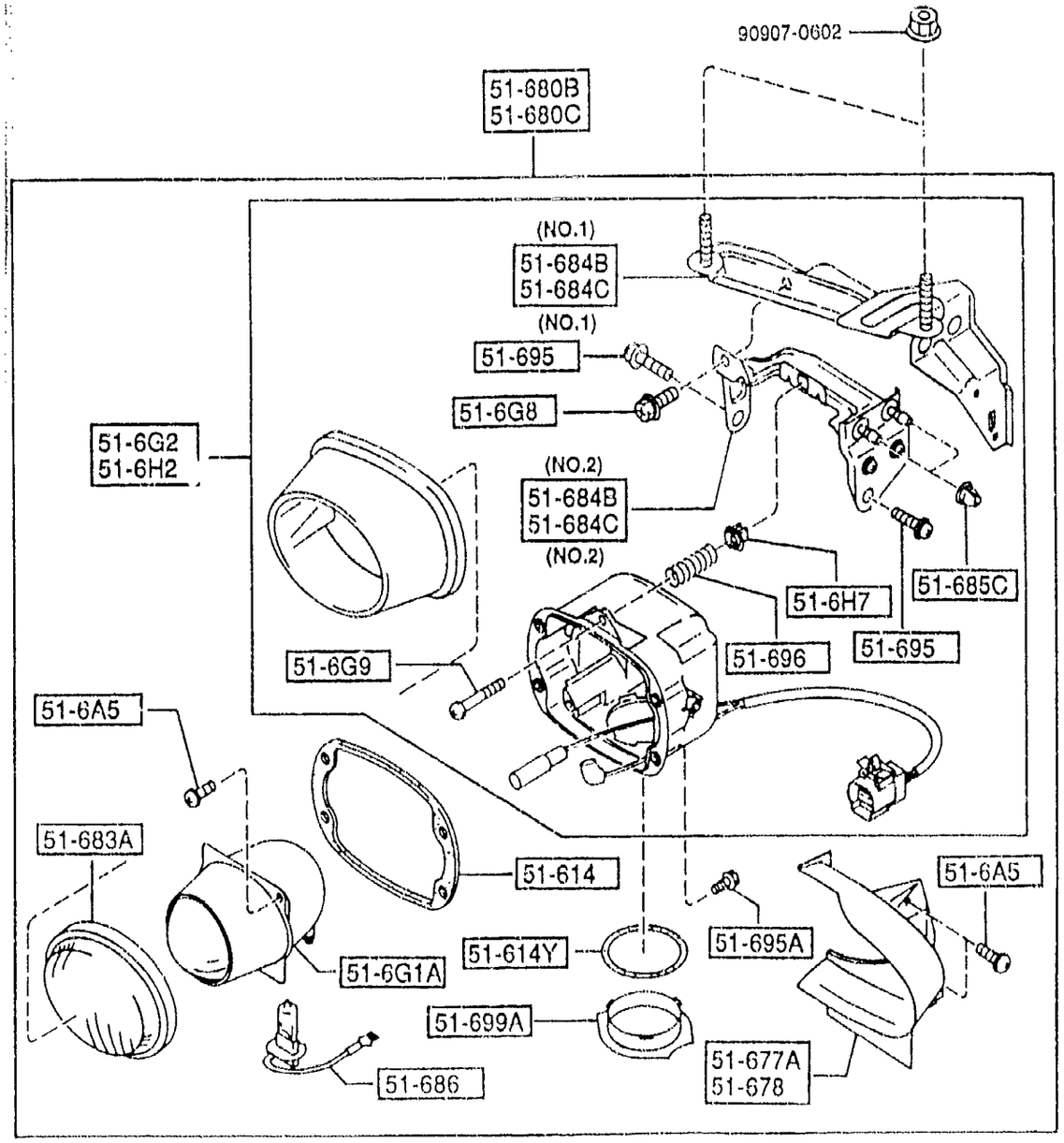

AUFA06

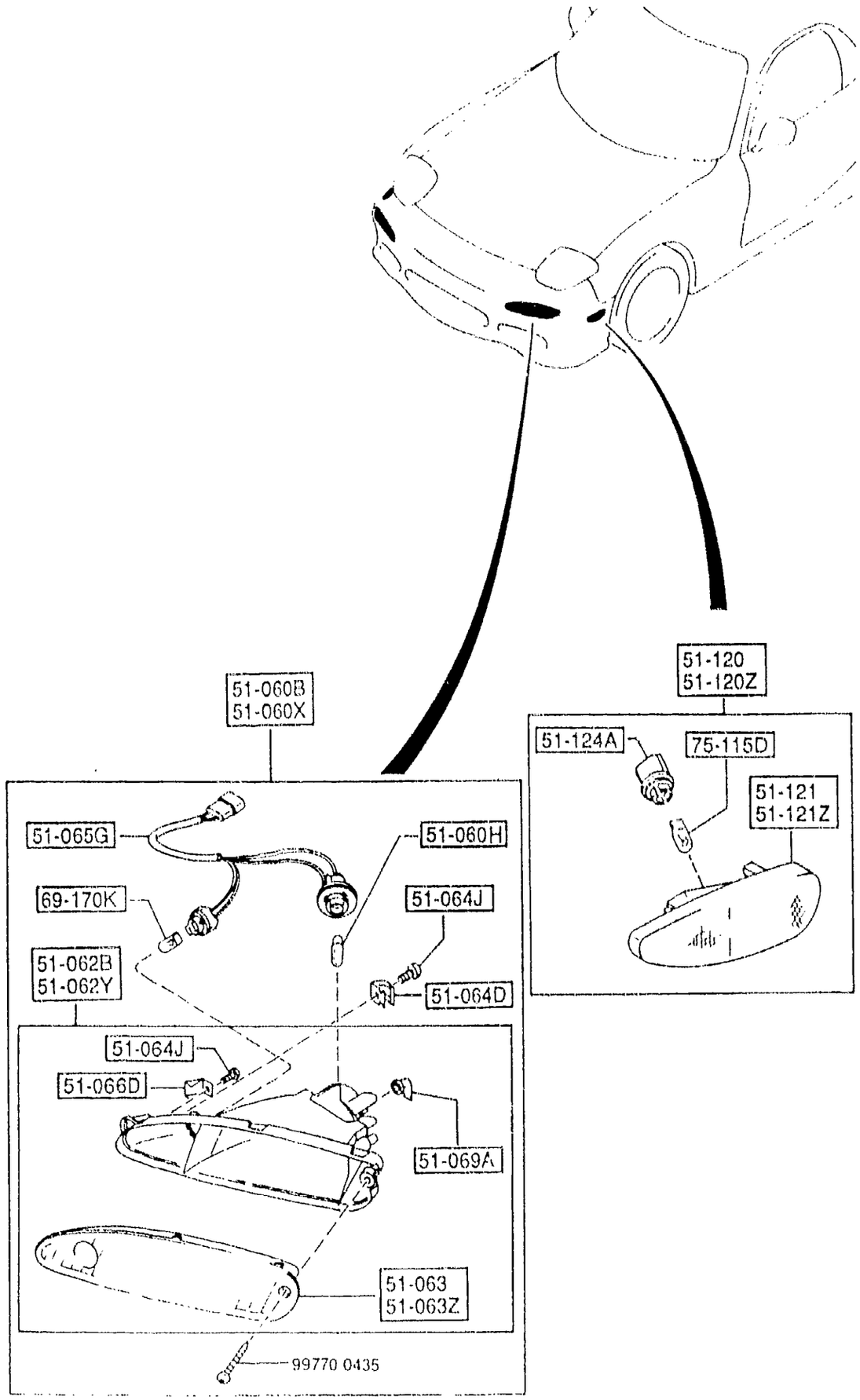

5105 -1 FRONT COMBINATION LAMPS

PART NO.	QTY	MODEL/RESTRICTION	MODEL/RESTRICTION	MODEL/RESTRICTION	FROM-TO
51-060B FD01-51-060D	1	LAMP(R),FRT. COMB.			
51-060H 90701-7270	2	BULB 12V/27W			
51-060X FD01-51-070D	1	LAMP(L),FRT. COMB.			
51-062B FD01-51-06XB	1	LENS & BODY(R),F. COMB.			
51-062Y FD01-51-07XB	1	LENS & BODY(L),F. COMB.			
51-063 FD01-51-061	1	LENS(R),FRT COMB.			
51-063Z FD01-51-071	1	LENS(L),FRT COMB.			
51-064D FD01-51-057	2	SPRING,FRT. COMB.			
51-064J FD01-51-1E6	4	SCREW,TAPPING			
51-065G FD01-51-064A	2	SOCKET,F. COMB. LAMP			
51-066D FD01-51-056	2	BRACKET,FRONT COMB. LAMP			
51-069A NA01-51-069	2	TUBE,HEAD LAMP			
51-120 FD01-51-5E0B	1	LAMP(R),SIDE TURN			
51-120Z		LAMP(L),SIDE TURN			

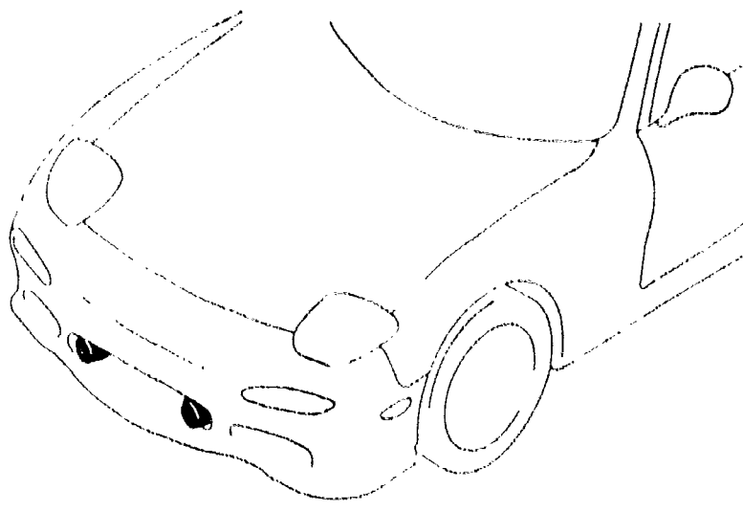

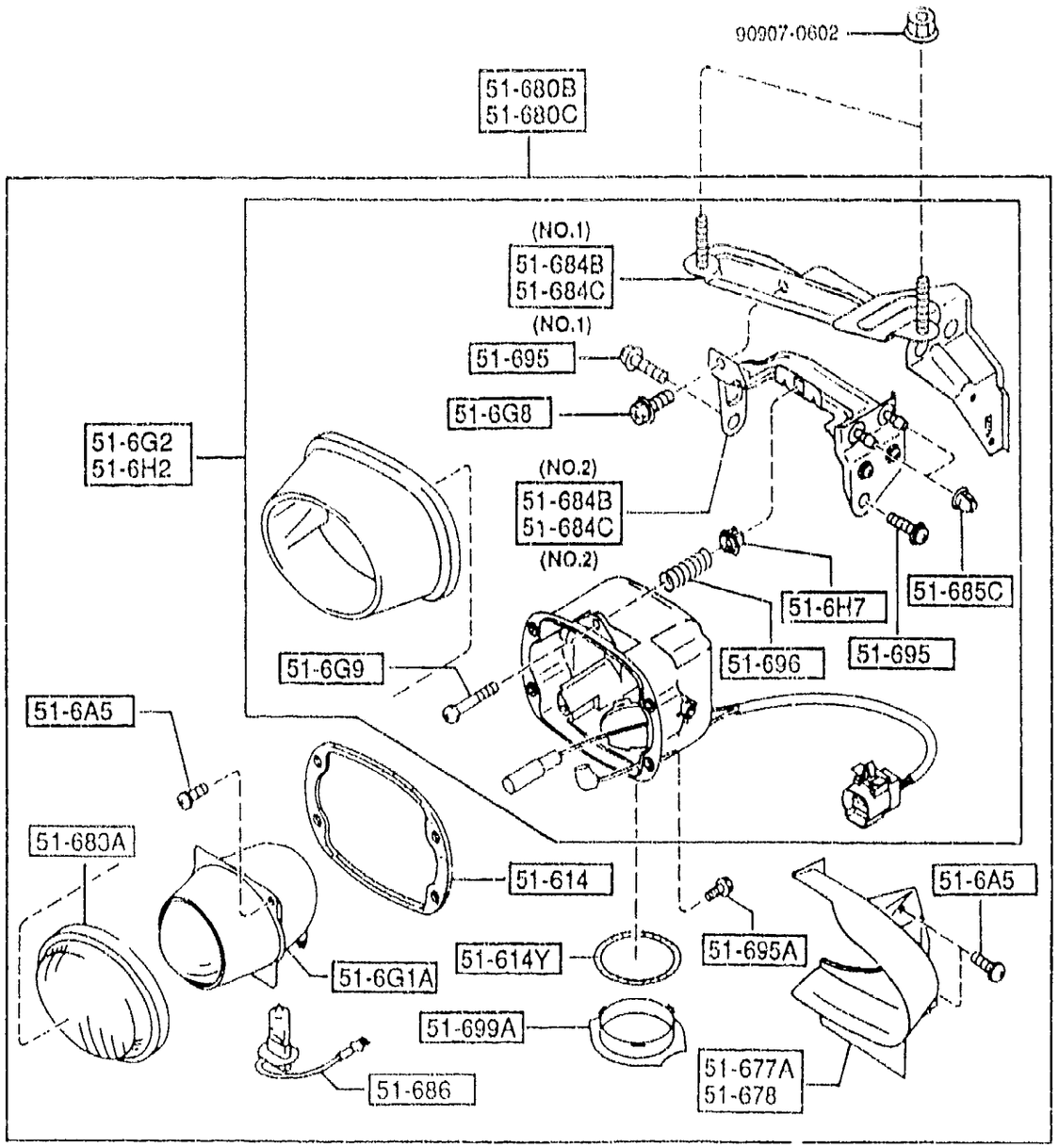

PART NO.	QTY	MODEL/RESTRICTION	MODEL/RESTRICTION	MODEL/RESTRICTION	FROM-TO
CONT'D					
FD01-51-5F0B	1				
51-121		LENS & BODY(R)			
FD01-51-5E1B	1				
51-121Z		LENS & BODY(L)			
FD01-51-5F1B	1				
51-124A		SOCKET,SIDE TURN			
H380-51-5E2	2				
51-6A5		SCREW,F. FOG LAMP			
FD01-51-6A5	8	(W/STEEL SUN ROOF) (W/GLASS SUN ROOF)			
51-6G1A		UNIT,FOG LAMP			
FD01-51-6G1A	2	(W/STEEL SUN ROOF) (W/GLASS SUN ROOF)			
51-6G2		HOUSING(R),FOG LAMP			
F100-51-68YA	1	(W/STEEL SUN ROOF) (W/GLASS SUN ROOF)			
51-6G8		BOLT,SPECIAL			
FD01-51-6G8	2	(W/STEEL SUN ROOF) (W/GLASS SUN ROOF)			
51-6G9		SCREW,ADJUST			
F100-51-6G9	2	(W/STEEL SUN ROOF) (W/GLASS SUN ROOF)			
51-6H2		HOUSING(L),FOG LAMP			
F100-51-69YB	1	(W/STEEL SUN ROOF) (W/GLASS SUN ROOF)			
51-6H7		SCREW,GROMMET			
FD01-51-6H7	2	(W/STEEL SUN ROOF) (W/GLASS SUN ROOF)			
51-614		GASKET			
FD01-51-682	2	(W/STEEL SUN ROOF) (W/GLASS SUN ROOF)			
51-614Y		GASKET(L)			

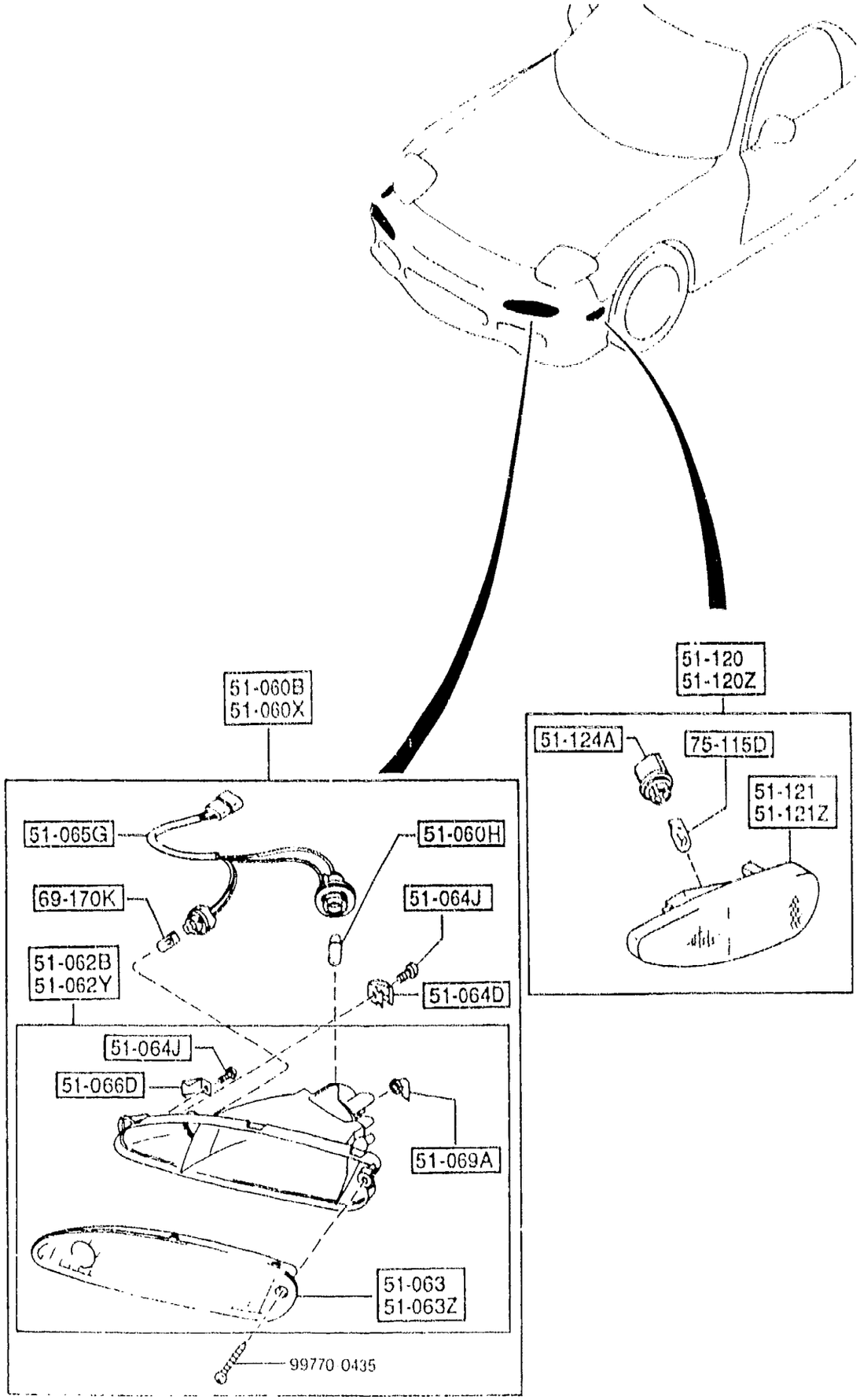

PART NO.	QTY	MODEL/RESTRICTION	MODEL/RESTRICTION	MODEL/RESTRICTION	FROM-TO
CONT'D					
FD01-51-692	2	(W/STEEL SUN ROOF) (W/GLASS SUN ROOF)			
51-677A		COVER(R),FOG LAMP			
FD01-51-677	1	(W/STEEL SUN ROOF) (W/GLASS SUN ROOF)			
51-678		COVER(L),FOG LAMP			
FD01-51-678	1	(W/STEEL SUN ROOF) (W/GLASS SUN ROOF)			
51-680B		LAMP(R),F.FOG			
F111-51-680	1	(W/STEEL SUN ROOF) (W/GLASS SUN ROOF)			
51-680C		LAMP(L),F.FOG			
F111-51-690	1	(W/STEEL SUN ROOF) (W/GLASS SUN ROOF)			
51-683A		LENS,FRONT FOG LAMP			
FD01-51-683	2	(W/STEEL SUN ROOF) (W/GLASS SUN ROOF)			
51-684B		BRACKET(R),F.FOG LAMP			
FD01-51-684A	1	(ILLUST. NO.1) (W/STEEL SUN ROOF) (W/GLASS SUN ROOF)			
FD02-51-684	1	(ILLUST. NO.2) (W/STEEL SUN ROOF) (W/GLASS SUN ROOF)			
51-684C		BRACKET(L),LAMP-F. FOG			
FD01-51-694A	1	(ILLUST. NO.1) (W/STEEL SUN ROOF) (W/GLASS SUN ROOF)			
FD02-51-694	1	(ILLUST. NO.2) (W/STEEL SUN ROOF) (W/GLASS SUN ROOF)			
51-685C		CLIP			
FD01-51-674	4	(W/STEEL SUN ROOF) (W/GLASS SUN ROOF)			
51-686		BULB,FRONT FOG LAMP			
B01A-51-686	2	(W/STEEL SUN ROOF) (W/GLASS SUN ROOF)			

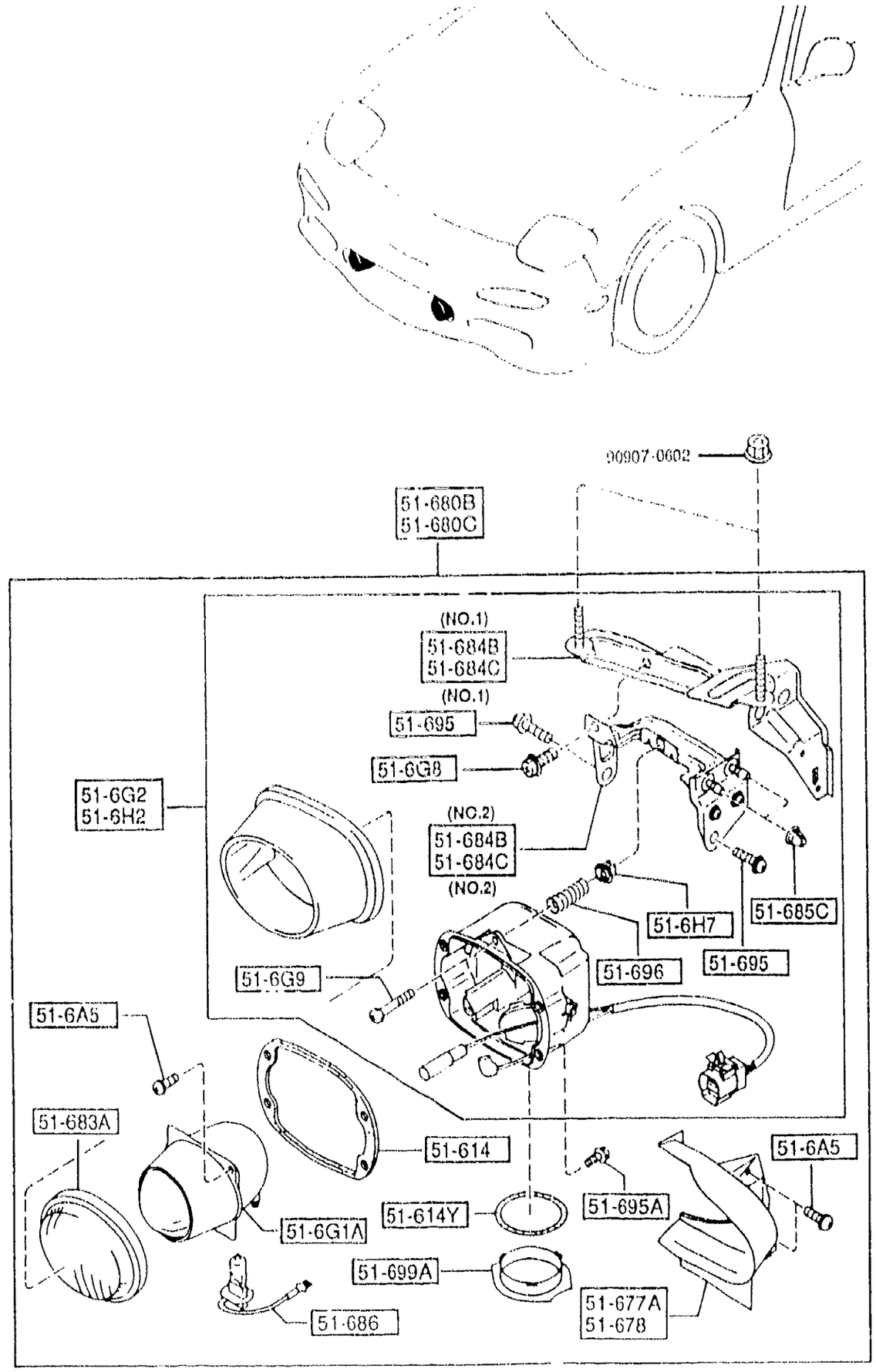

AUFA06

5105 -4 * FRONT COMBINATION LAMPS

PART NO.	QTY	MODEL/RESTRICTION	MODEL/RESTRICTION	MODEL/RESTRICTION	FROM TO
51-695		SCREW,FRONT FOG LAMP			
FD01-51-695	4	(W/STEEL SUN ROOF) (W/GLASS SUN ROOF)			
51-695A		SCREW,LAMP			
FD01-51-671	8	(W/STEEL SUN ROOF) (W/GLASS SUN ROOF)			
51-696		SPRING,FRONT FOG LAMP			
FD01-51-696	2	(W/STEEL SUN ROOF) (W/GLASS SUN ROOF)			
51-699A		COVER,F.FOG LAMP			
FD01-51-676	2	(W/STEEL SUN ROOF) (W/GLASS SUN ROOF)			
69-170K		BULB,INTERIOR MIRROR			
99701-6050	2	12V 5W			
75-115D		BULB			
99701-6049	2	12V 3CP			

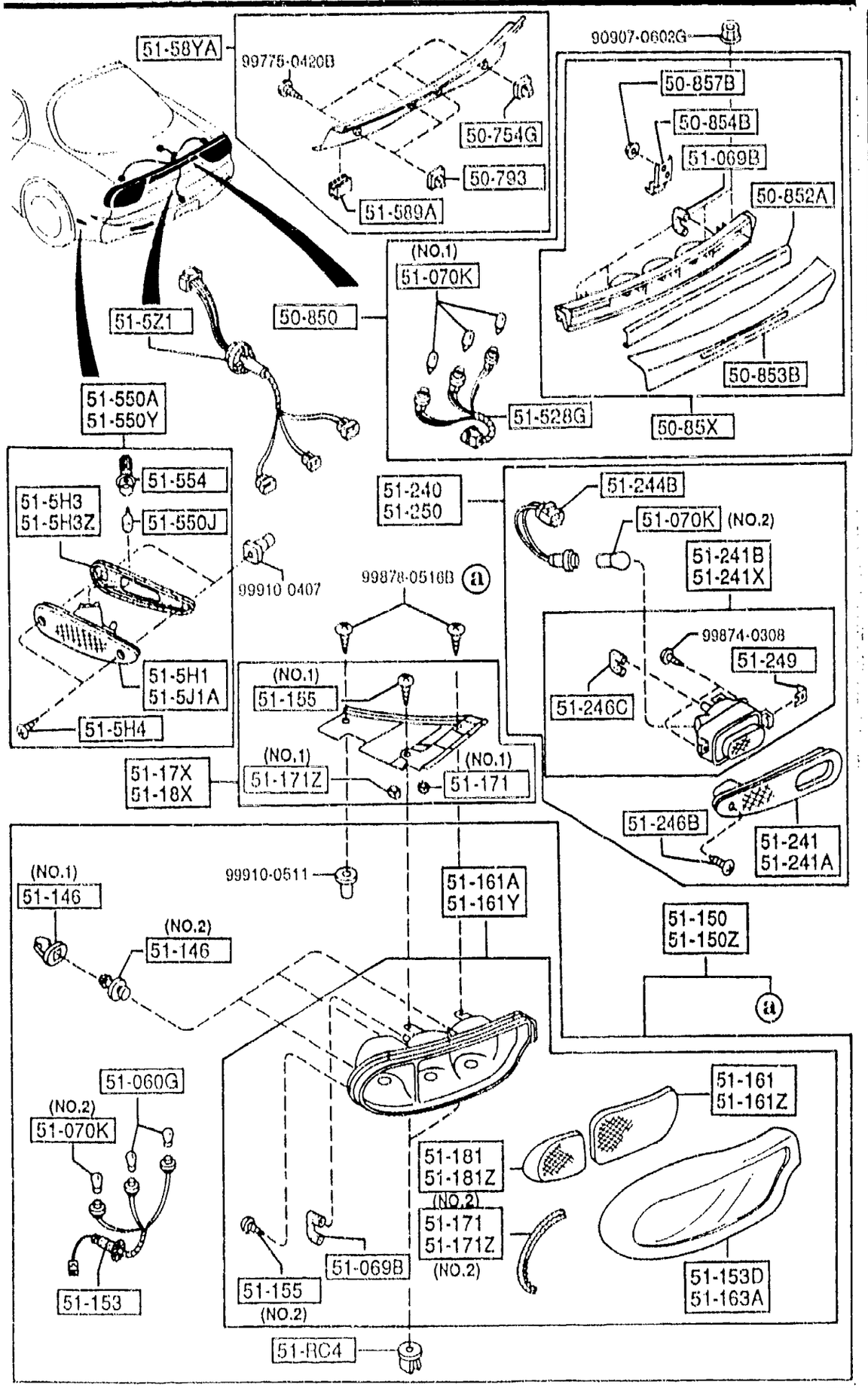

AUFA06

PART NO.	QTY	MODEL/RESTRICTION	MODEL/RESTRICTION	MODEL/RESTRICTION	FROM-TO
50-754G		GROMMET,SCREW			
FD03-50-792	1				
50-793		GROMMET,SCREW			
FD02-50-792	3				
50-85X		LENS & BODY,REAR FINISHER			
FD01-51-59XA A (FD01-51-59XB)	1				-5C26
*FD01-51-59XB	1				5C26-
50-850		FINISHER,REAR			
FD01-50-850C A (FD01-50-850D)	1				-5C26
*FD01-50-850D	1				5C26-
50-852A		LENS,REAR FINISHER			
FD01-51-577	1				-5C26
50-853B		LENS,REAR FINISHER			
FD01-51-591 A (FD01-51-591A)	1				-5C26
*FD01-51-591A	1				5C26-
50-854B		BRACKET,REAR FINISHER			
FD01-51-585	4				
50-857B		NUT,SPEED-REAR FINISHER			
FD01-51-594	8				
51-RC4		GROMMET,SIDE GARNISH			
FD01-51-RC4	4				
51-060G		BULB			
99701-4278	4	12V 27W/8W			
51-069B		TUBE,LAMP-FRONT COMB.			
B481-51-069	3				
51-070K		BULB			
99700-7180		A12V 18.4W			

5C26 FD333 -400531

CAT. AUFA06-04

1997-01

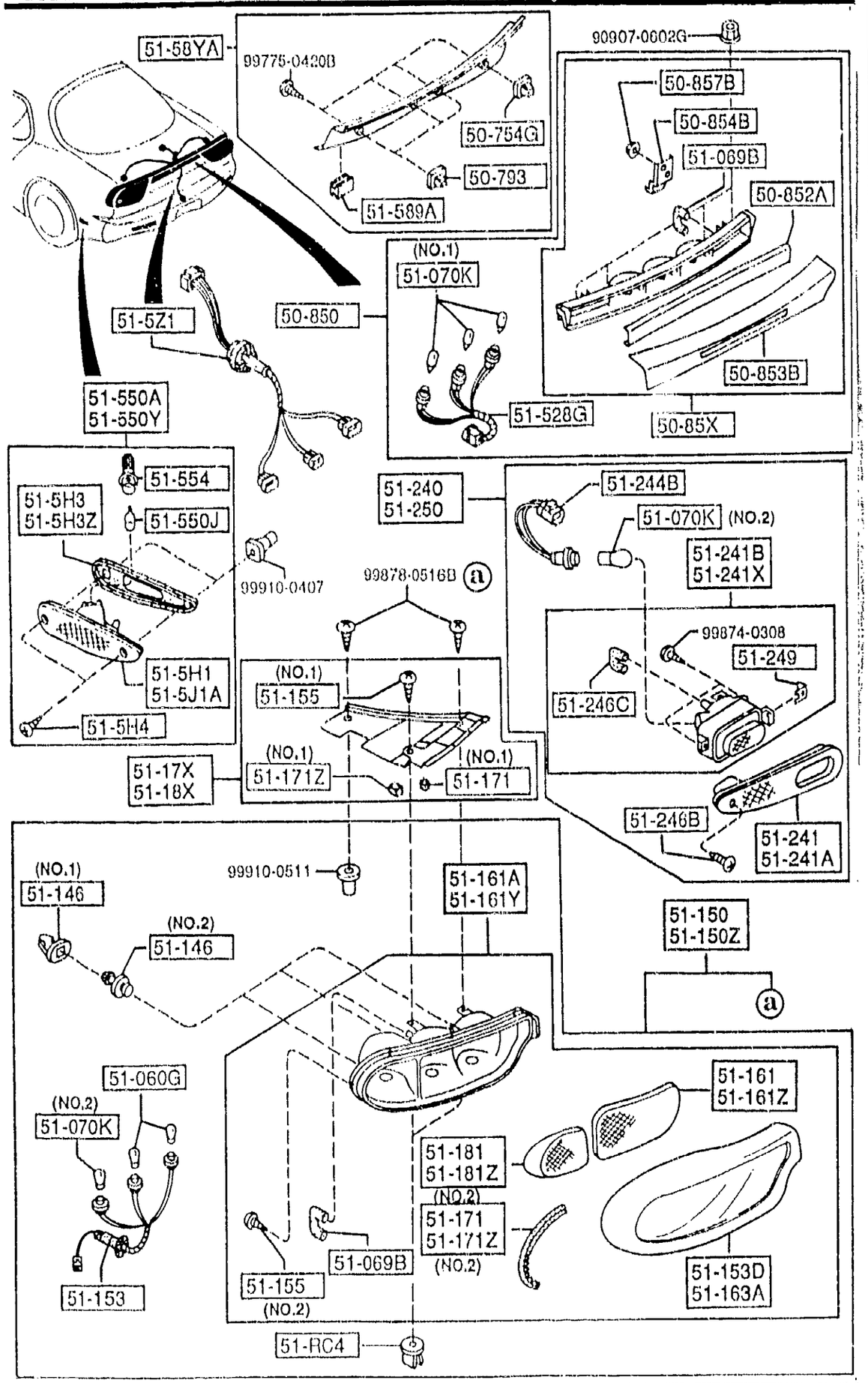

AUFA06

PART NO.	QTY	MODEL/RESTRICTION	MODEL/RESTRICTION	MODEL/RESTRICTION	FROM-TO
CONT'D					
	3	(ILLUST. NO.1)			
99701-3270	4	12V 27W (ILLUST. NO.2)			
51-146		GROMMET,SCREW-R.COMB			
EA02-51-146A	6	(ILLUST. NO.1)			
EA04-51-146A	6	(ILLUST. NO.2)			
51-150		LAMP SET(R),RR.COMB.			
8BFH-51-150	1				
51-150Z		LAMP SET(L),RR.COMB.			
8BFH-51-160	1				
51-153		SOCKET,RR.COMB.			
FD01-51-155B	2				
51-153D		LENS NO.3(R),RR COMB .LAMP			
FD01-51-153B	1				
51-155		SCREW,RR.COMB.			
FD01-51-143	2	(ILLUST. NO.1)			
FD01-51-144	12	(ILLUST. NO.2)			
51-161		LENS(R),RR.COMB.			
FD01-51-151	1				
51-161A		LENS & BODY(R),RR COMB.			
FD01-51-170B	1				
51-161Y		LENS & BODY(L),RR COMB.			
FD01-51-180B	1				
51-161Z		LENS(L),RR.COMB.			
FD01-51-161	1				
51-163A		LENS NO.3(L),RR COMB .LAMP			
FD01-51-163B	1				
51-17X		COVER(R),RR COMB.			
FD01-51-17XE	1				

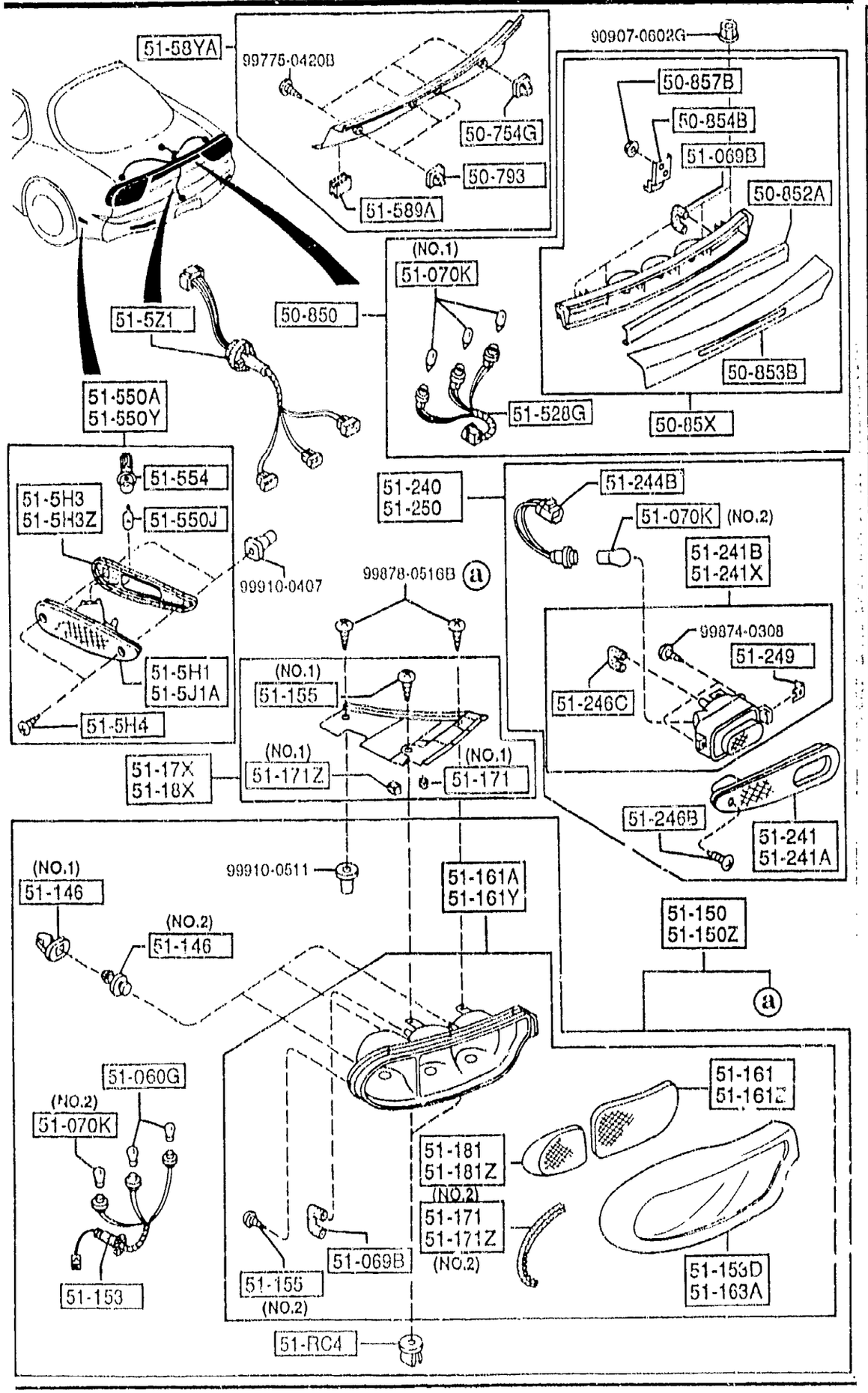

PART NO.	QTY	MODEL/RESTRICTION	MODEL/RESTRICTION	MODEL/RESTRICTION	FROM-TO
51-171		PROTECTOR(R),RR.COMB			
FD01-51-173	1	(ILLUST. NO.2)			
FD02-51-159	2	(ILLUST. NO.1)			-4A03
51-171Z		PROTECTOR(L),RR.COMB			
FD02-51-169	4	(ILLUST. NO.1)			
FD01-51-183	1	(ILLUST. NO.2)			
51-18X		COVER(L),RR COMB.			
FD01-51-18XE	1				
51-181		LENS NO.2(R),RR.COMB			
FD01-51-152	1				
51-181Z		LENS NO.2(L),RR.COMB			
FD01-51-162	1				
51-240		LAMP(R),BACK UP			
FD01-51-240B	1				
51-241		HOUSING(R),BACK UP L AMP			
FD01-51-241B	1				
51-241A		HOUSING(L),BACK UP L AMP			
FD01-51-251B	1				
51-241B		LENS & BODY(R),BACK UP			
FD01-51-24XA	1				
51-241X		LENS & BODY(L),BACK UP			
FD01-51-25XA	1				
51-2443		SOCKET,BACK UP LAMP			
FD01-51-244	2				
51-246B		SCREW,BACK LAMP			
FD01-51-248	2				
51-246C		TUBE,BACK UP LAMP			
FD01-51-246	2				

4A03 FD333 -400014

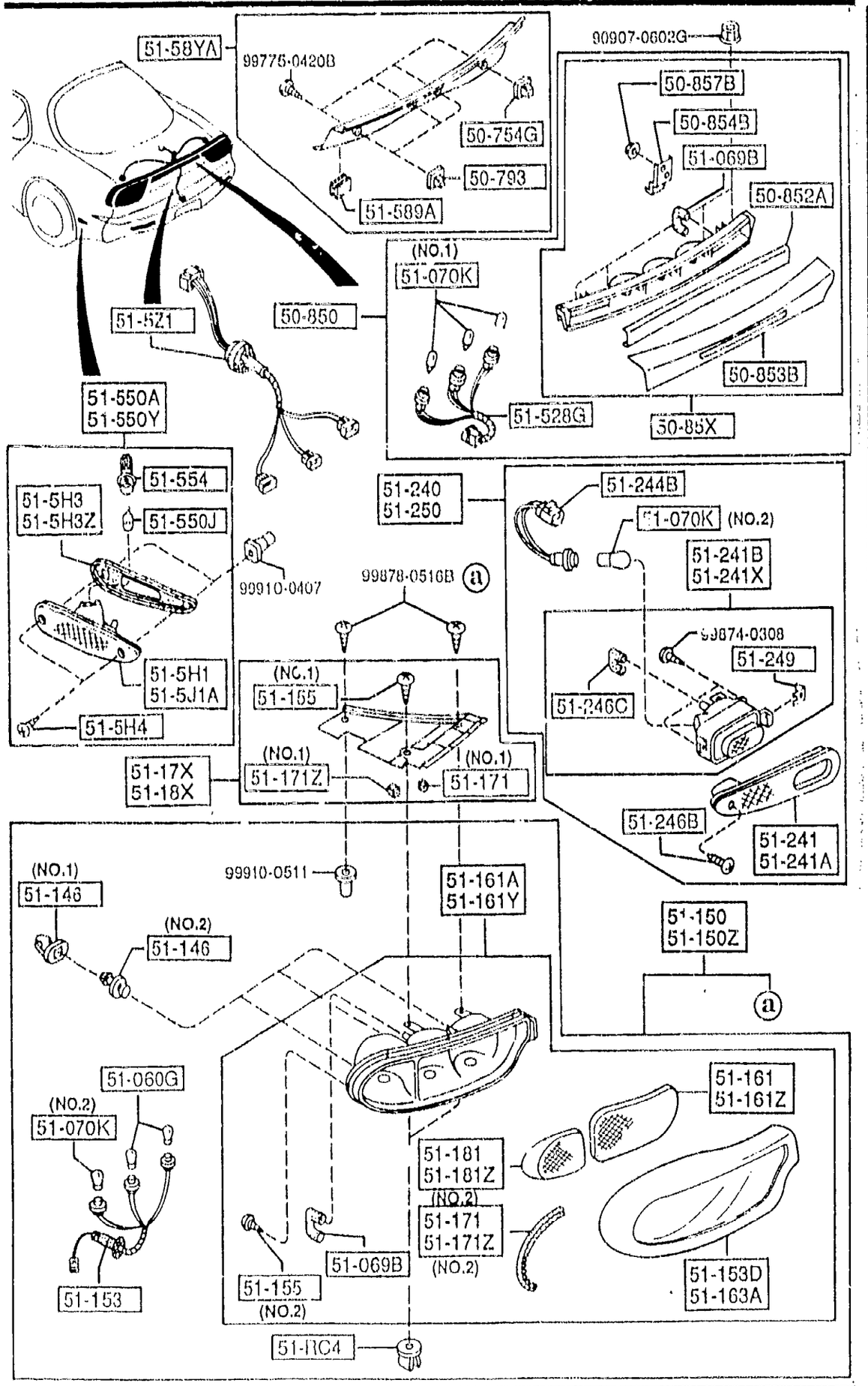

PART NO.	QTY	MODEL/RESTRICTION	MODEL/RESTRICTION	MODEL/RESTRICTION	FROM-TO
51-249		SPRING,BACK UP LAMP			
FD01-51-249	2				
51-250		LAMP(L),BACK UP			
FD01-51-250B	1				
51-5H1		LENS & BODY(R),RR SIDE TURN			
FD01-51-5H1C	1				
51-5H3		GASKET(R),REAR SIDE			
FD01-51-5H3	1				
51-5H3Z		GASKET(L),REAR SIDE			
FD01-51-5J3	1				
51-5H4		SCREW,REAR SIDE			
FD01-51-5H4	4				
51-5J1A		LENS & BODY(L),RR SIDE TURN			
FD01-51-5J1C	1				
51-5Z1		CORD,LAMP			
FD01-51-5Z1B	1				
51-528G		SOCKET			
FD01-51-584A	1				
51-550A		LAMP(R),SIDE TURN-RR			
FD01-51-5H0D	1				
51-550J		BULB			
99701-6040	2	12V 3.8W			
51-550Y		LAMP(L),SIDE TURN-RR			
FD01-51-5J0D	1				
51-554		SOCKET,RR SIDE TURN LAMP			
FD01-51-5H2	2				
51-58YA		COVER,RR FINISHER			

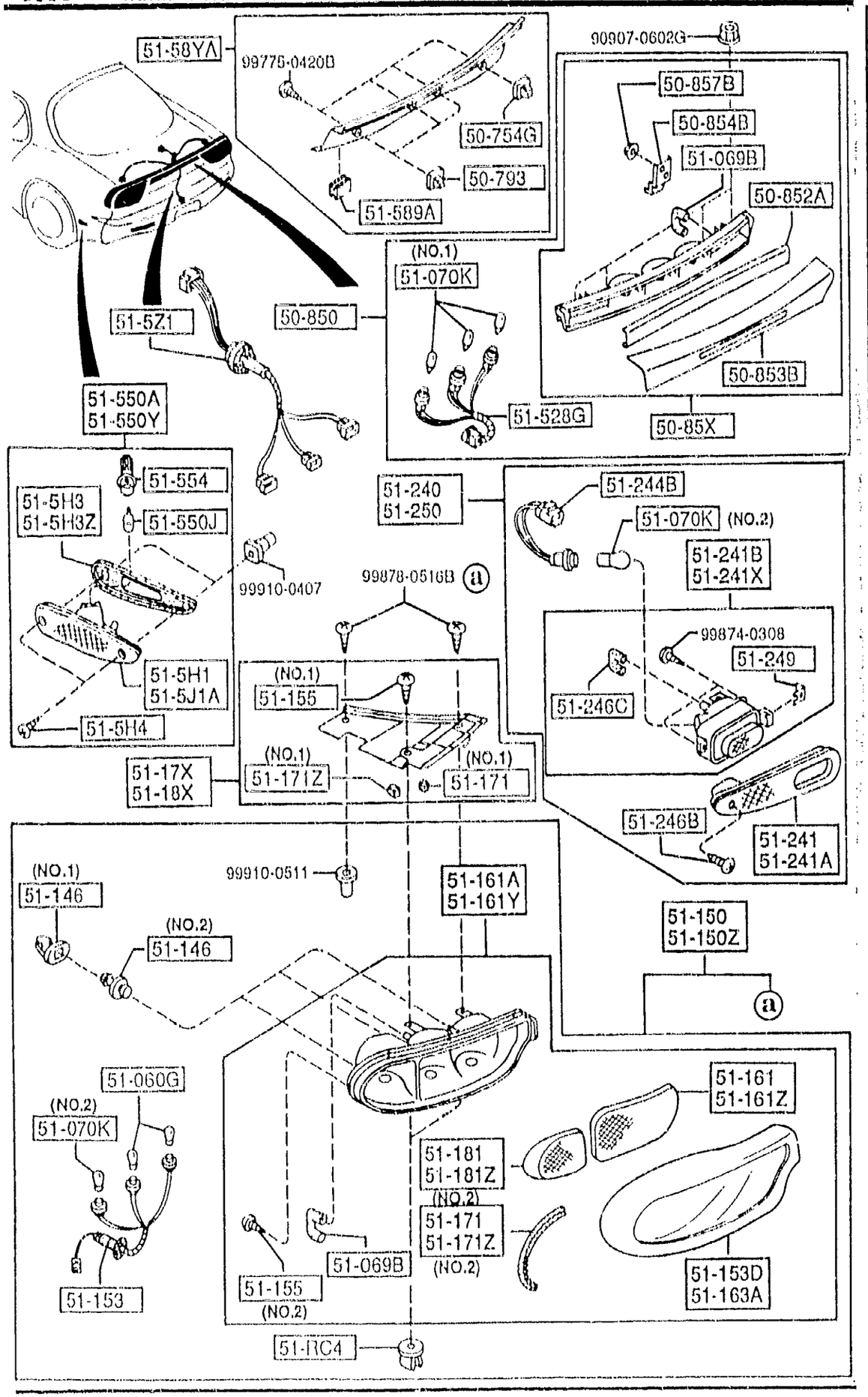

PART NO.	QTY	MODEL/RESTRICTION	MODEL/RESTRICTION	MODEL/RESTRICTION	FROM-TO
CONT'D					
FD01-51-58YC	1				
+---------+					
| 51-589A |		PROTECTOR,COVER			
+---------+					
FD01-51-589	4				

AUFA06

CAT. AUFA06-04

1997-01

5120 LICENSE LAMPS

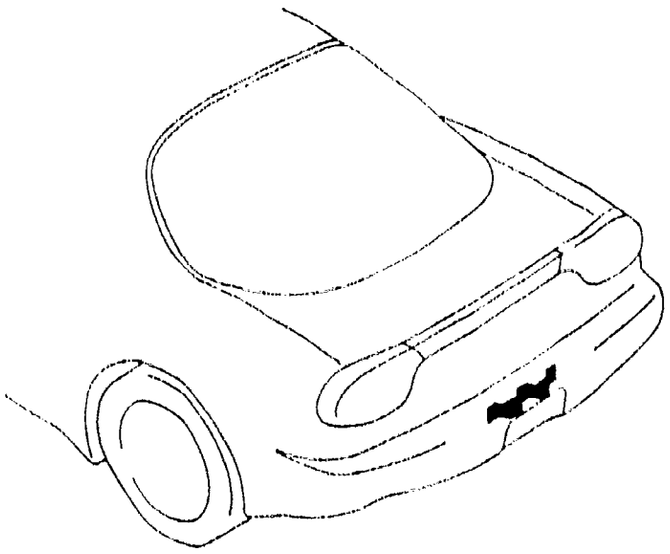

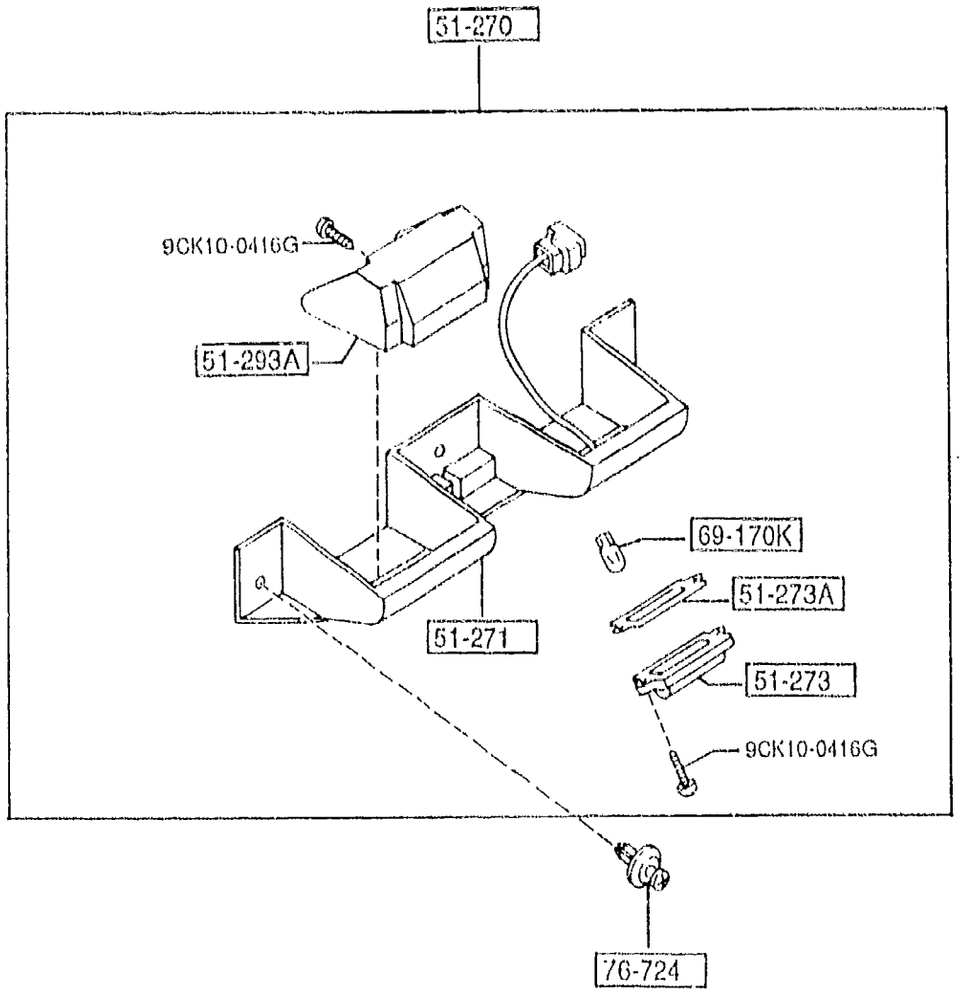

PART NO.	QTY	MODEL/RESTRICTION	MODEL/RESTRICTION	MODEL/RESTRICTION	FROM-TO
51-270		LAMP,LICENSE			
FD01-51-270C	1				
51-271		BRACKET,LICENCE LAMP			
FD01-51-271A	1				
51-273		LENS,LICENCE LAMP			
G225-51-274B	2				
51-273A		GASKET,LICENSE			
G225-51-273	2				
51-293A		COVER,LICENSE LAMP			
FD01-51-293	2				
69-170K		BULB,INTERIOR MIRROR			
99701-6050	2	12V 5W			
76-724		RIVET			
B092-51-833	3				

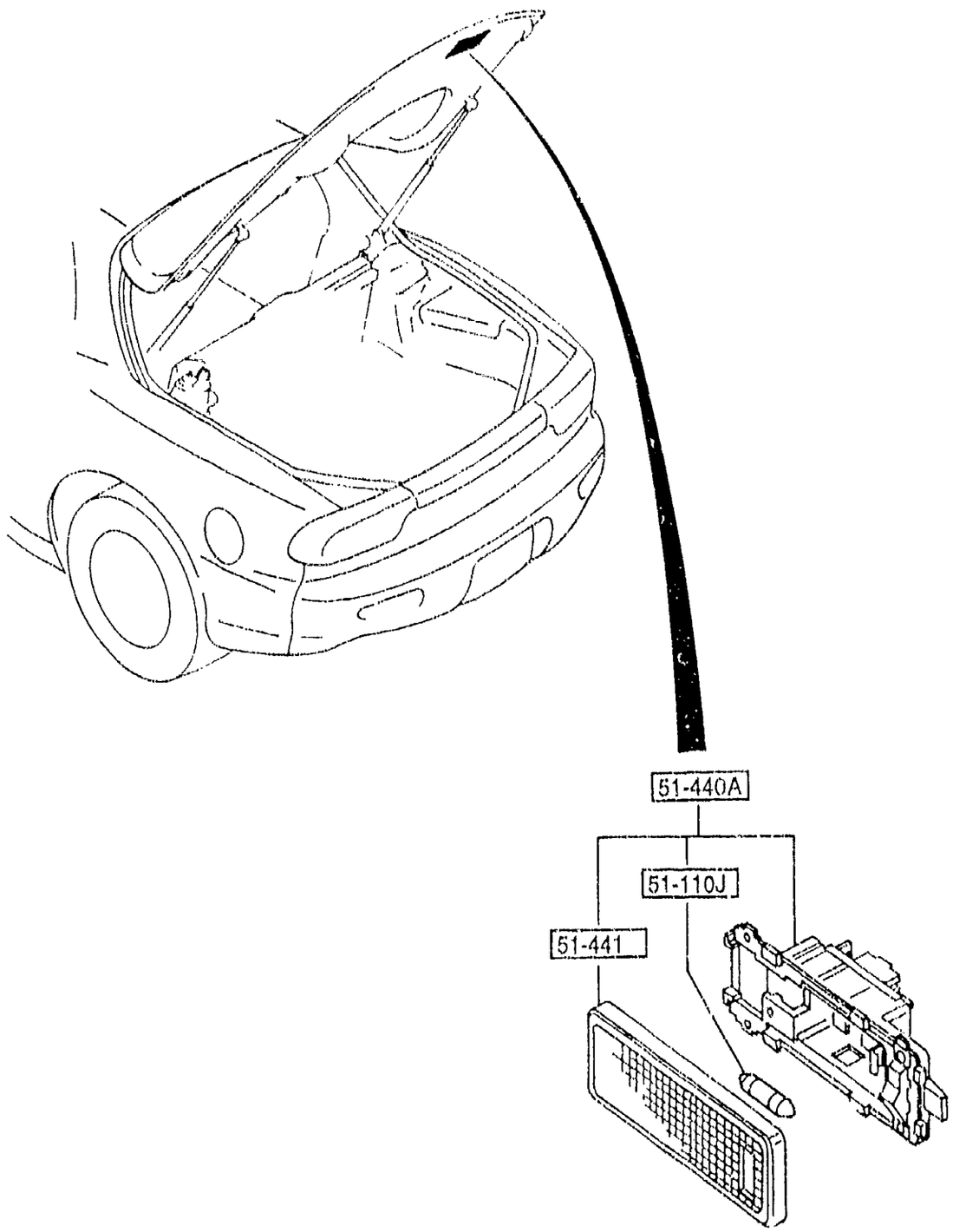

PART NO.	QTY	MODEL/RESTRICTION	MODEL/RESTRICTION	MODEL/RESTRICTION	FROM-TO
51-110J		BULB			
99700-5080	1	12V/8W			
51-440A		LAMP,CARGO ROOM			
LA01-51-440	1				
51-441		LENS			
G225-51-441	1				

(STEEL SUN-RF)
(GLASS SUN-RF)

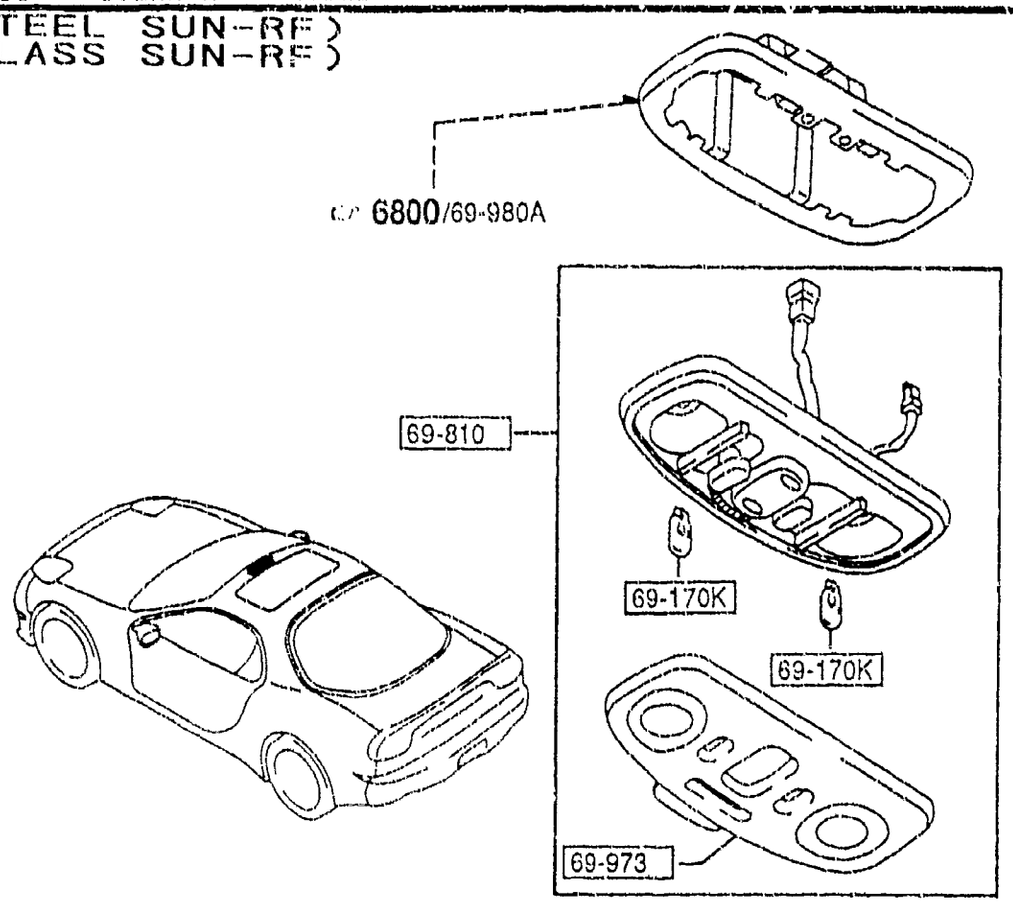

(W/O SUN-RF)

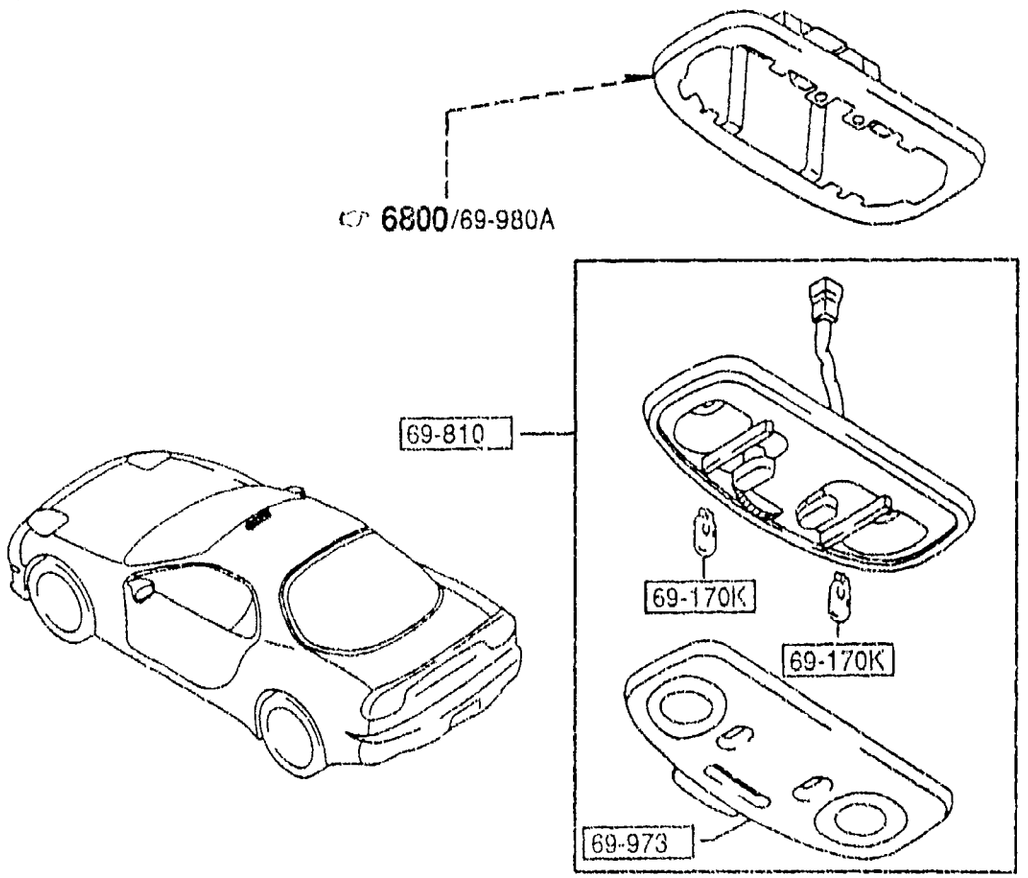

AUFA06

5130 -1 * OVERHEAD CONSOLE

PART NO.	QTY	MODEL/RESTRICTION	MODEL/RESTRICTION	MODEL/RESTRICTION	FROM-TO
69-170K		BULB,INTERIOR MIRROR			
99701-6050	2	12V 5W			
69-810		CONSOLE,OVERHEAD			
FD01-69-970D	1	(W/STEEL SUN ROOF) (W/GLASS SUN ROOF)			
02	INT-	FE5 FE6 FE7 BLACK			
FD03-69-970D	1	(W/O SUN ROOF)			-5515
02	INT-	FE5 FE6 FE7 BLACK			
FD03-69-970E	1	(W/O SUN ROOF)			5515-
02	INT-	FE5 FE6 FE7 BLACK			
69-973		LENS,OVERHEAD CONSOLE			
EA01-69-973	1	(W/O SUN ROOF)			
EA05-69-973	1	(W/STEEL SUN ROOF) (W/GLASS SUN ROOF)			

5515 FD333 -400229

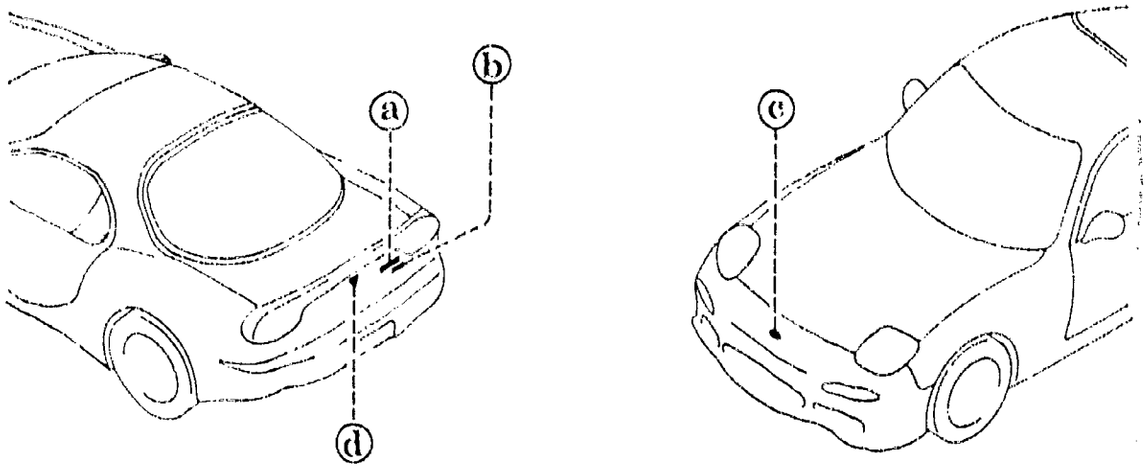

ⓐ 51-720

ⓑ 51-711B



ⓒ 51-740

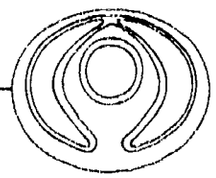

ⓓ 51-741A

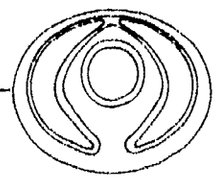

PART NO.	QTY	MODEL/RESTRICTION	MODEL/RESTRICTION	MODEL/RESTRICTION	FROM-TO
51-711B		ORNAMENT,MAKER NAME-REAR			
FD01-51-711A	1				
51-720		ORNAMENT,CAR NAME-RE AR			
FD01-51-721C	1				
51-740		MASCOT,FRONT			
FD02-51-731	1				
51-741A		MASCOT,REAR			
FD02-51-741A	1				

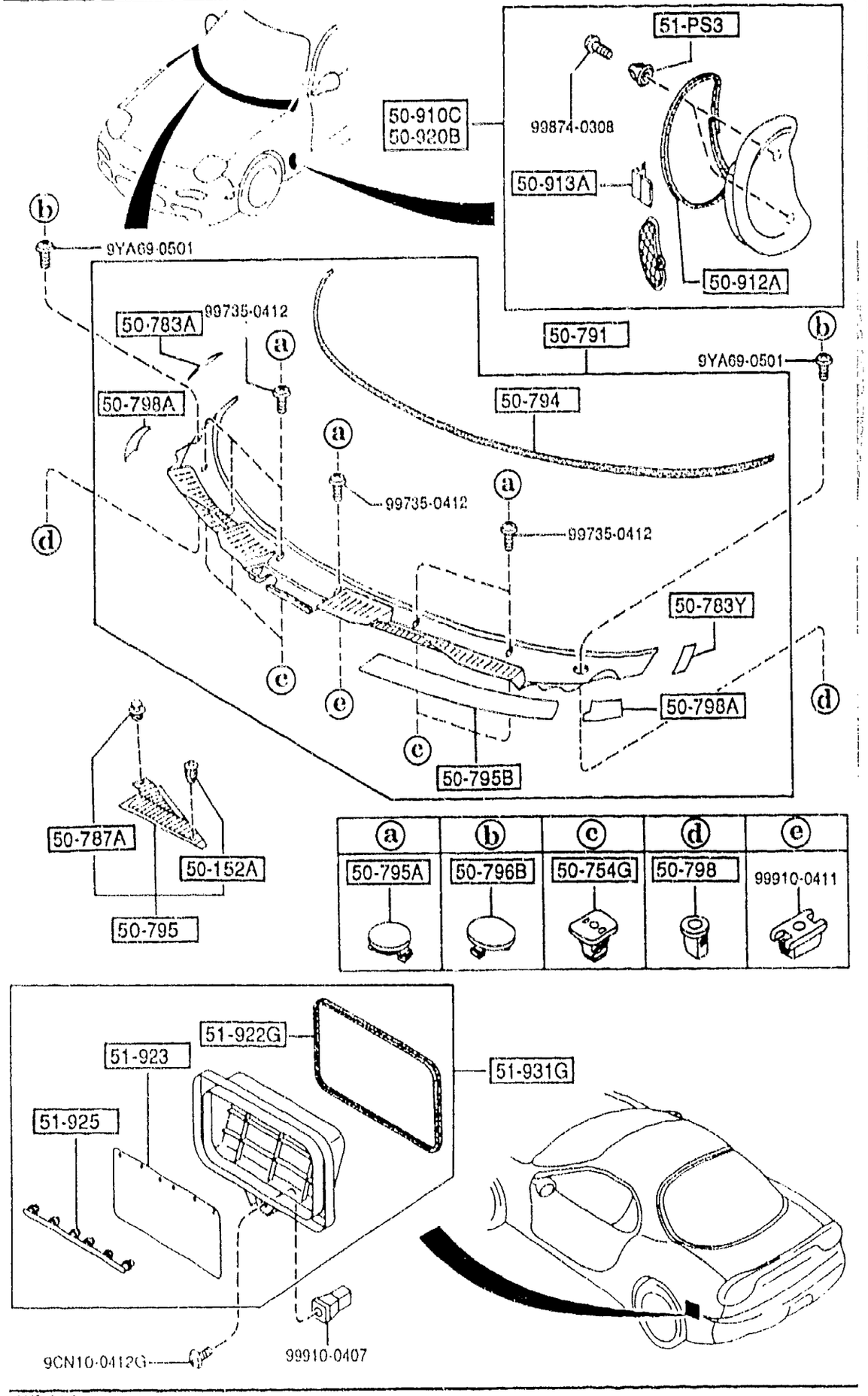

AUFA06

PART NO.	QTY	MODEL/RESTRICTION	MODEL/RESTRICTION	MODEL/RESTRICTION	FROM-TO
50-152A		CLIP			
3597-50-152	1				
50-754G		GROMMET,SCREW			
B482-50-792	5				
50-783A		PROTECTOR(R),COWL GRILLE			
FD01-50-783	1				
50-783Y		PROTECTOR(L),COWL GRILLE			
FD01-50-793	1				
50-787A		FASTENER			
B252-51-PJ5A	1				
50-791		GRILLE,COWL			
FD01-50-790A	1				
50-794		PROTECTOR			
FD01-50-794A	1				
50-795		BAFFLE,COWL			
FD01-50-7P0	1				
50-795A		CAP			
GA7B-50-795	6				
50-795B		PROTECTOR,COWL GRILLE			
FD01-50-795	1				
50-796B		CAP			
E016-50-796	2				
50-798		SCREW,GROMMET			
FD02-50-798	2				
50-798A		PROTECTOR,COWL GRILLE			
FD01-50-798	2				
50-910C		GRILLE(R),FENDER			
FDY2-50-91XB	1				

5180 COWL & EXTRACTOR GRILLES

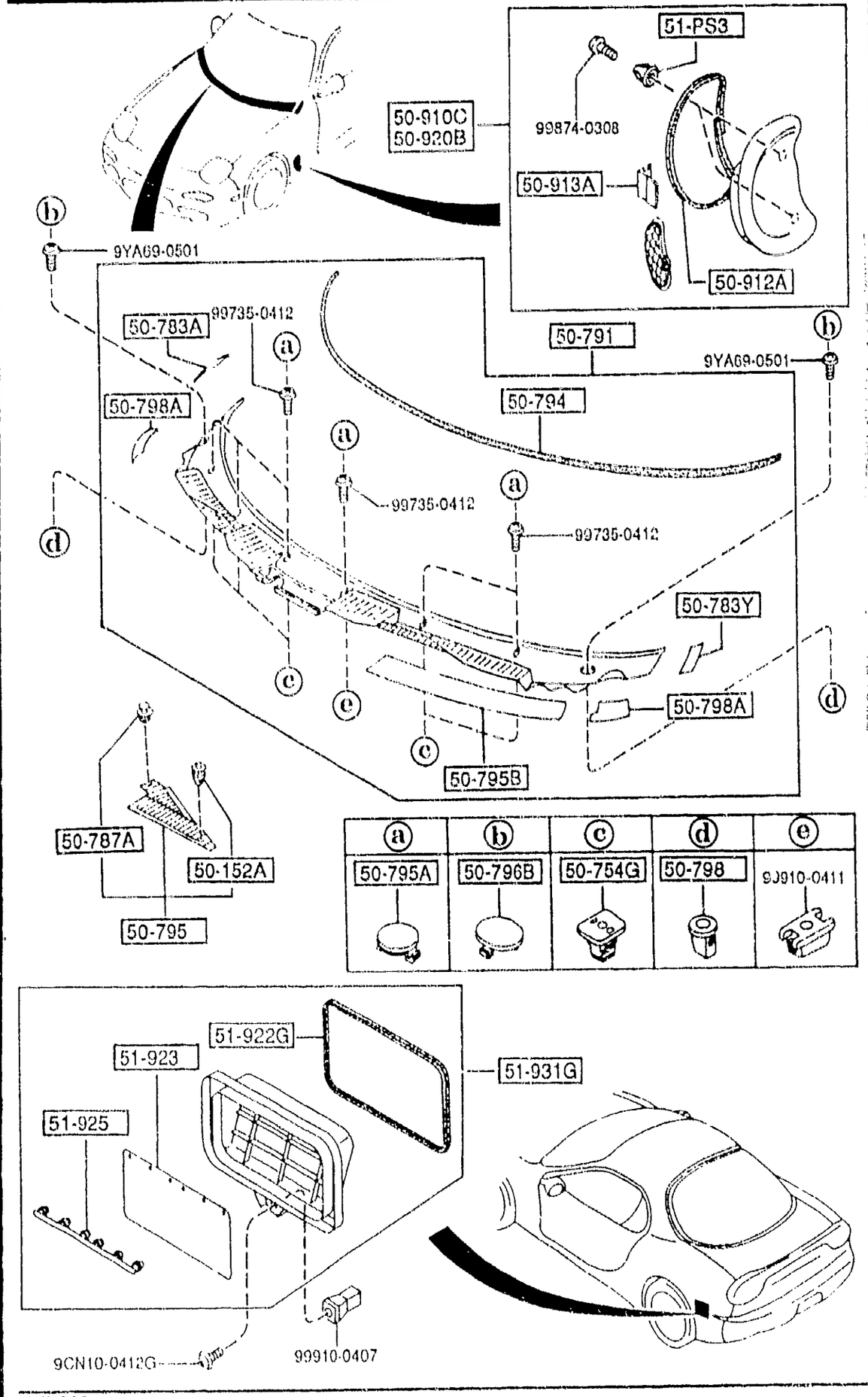

AUFA06

PART NO.	QTY	MODEL/RESTRICTION	MODEL/RESTRICTION	MODEL/RESTRICTION	FROM-TO
50-912A FD01-50-912	2	PROTECTOR,FENDER GRILLE			
50-913A FD01-50-913	2	CLIP,FENDER GRILLE			
50-920B FDY2-50-92XB	1	GRILLE(L),FENDER			
51-PS3 FD01-51-PS3	4	CLIP			
51-922G FD01-51-922A	1	GASKET,CHAMBER-EXTRACTOR			
51-923 FD01-51-923	1	VALVE,EXTRACT CHAMBER			
51-925 FD01-51-924	1	RETAINER,CHAMBER-EXTRACTOR			
51-931G FD01-51-920B	1	CHAMBER,EXTRACTOR			

CAT. AUFA06-04

1997-01

5230 BONNET

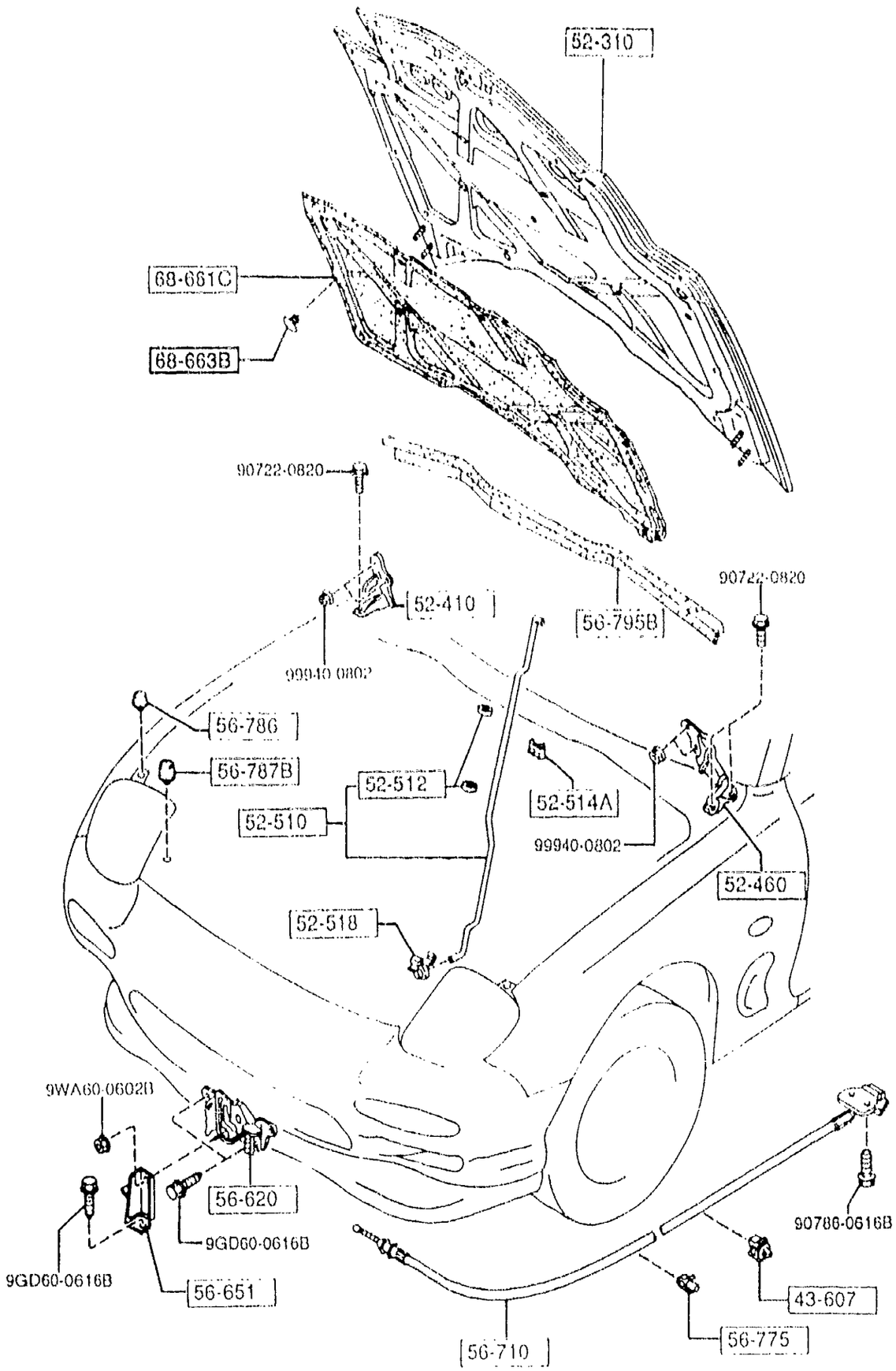

PART NO.	QTY	MODEL/RESTRICTION	MODEL/RESTRICTION	MODEL/RESTRICTION	FROM-TO
43-607		CLIP,RR BRAKE PIPE			
G309-43-607	1				
52-310		BONNET			
FD01-52-310G	1				
52-410		HINGE(R),BONNET			
FD01-52-410B AN(FD01-52-410C)	1				-5508
FD01-52-410C	1				5508-
52-460		HINGE(L),BONNET			
FD01-52-420B AN(FD01-52-420C)	1				-5508
FD01-52-420C	1				5508-
52-510		STAY,BONNET			
FD01-56-650	1				
52-512		SPACER,BONNET STAY			
FB01-52-512	2				
52-514A		HOLDER,BONNET STAY-SHROUD			
FD01-56-642	1				
52-518		HOLDER,BONNET STAY			
G144-52-518B	1				
56-620		LOCK,BONNET			
FD01-56-620B	1				
56-651		STAY,LOCK-BONNET			
FD01-56-67X	1				
56-710		WIRE,RELEASE-BONNET			
FD01-56-720C	1				
56-775		CLIP,WIRE-BONNET			
D001-56-731	1				
56-786		RUBBER(C),CUSHION-BONNET			

5508 FD333 -400229

AUFA06

CAT. AUFA06-04

1997-01

5230 BONNET

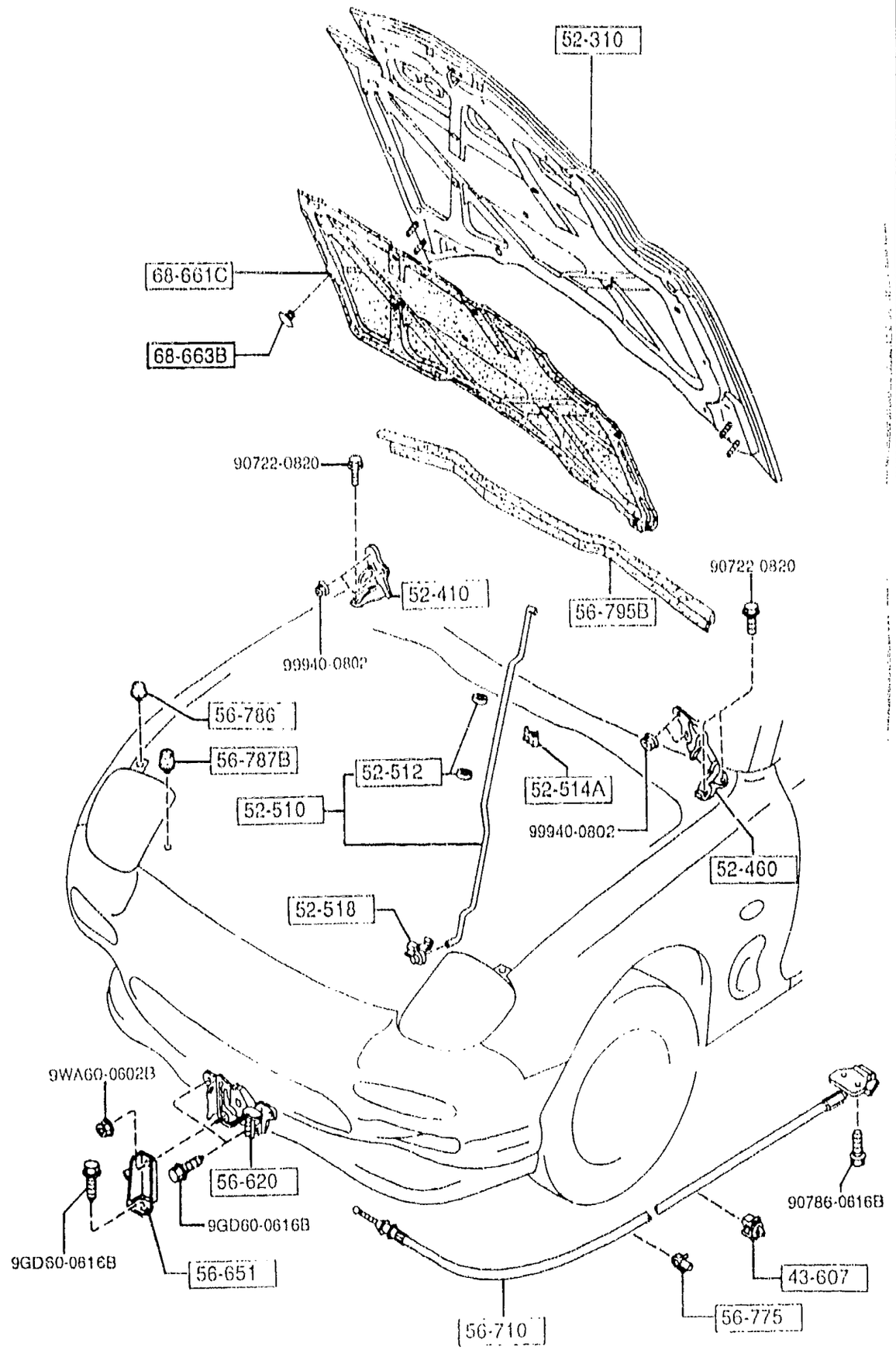

PART NO.	QTY	MODEL/RESTRICTION	MODEL/RESTRICTION	MODEL/RESTRICTION	FROM-TO
CONT'D					
FB01-56-786A	2				
56-787B		RUBBER,CUSHION-BONNET FRT			
FB01-56-787B	2				
56-795B		WEATHERSTRIP,BONNET-REAR			
FD01-56-760B	1				
68-661C		INSULATOR,BONNET			
FD01-68-601C	1				
68-663B		FASTENER,BONNET			
GA2A-56-694	13				

AUFA06

CAT. AUFA06-04

1997-01

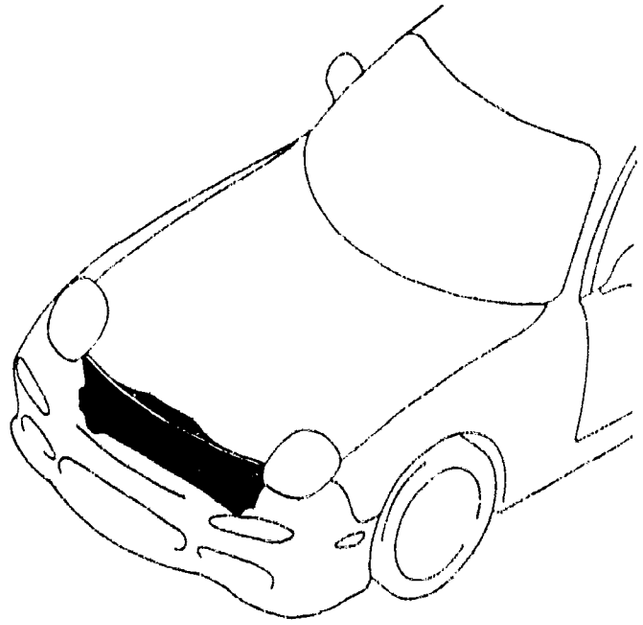

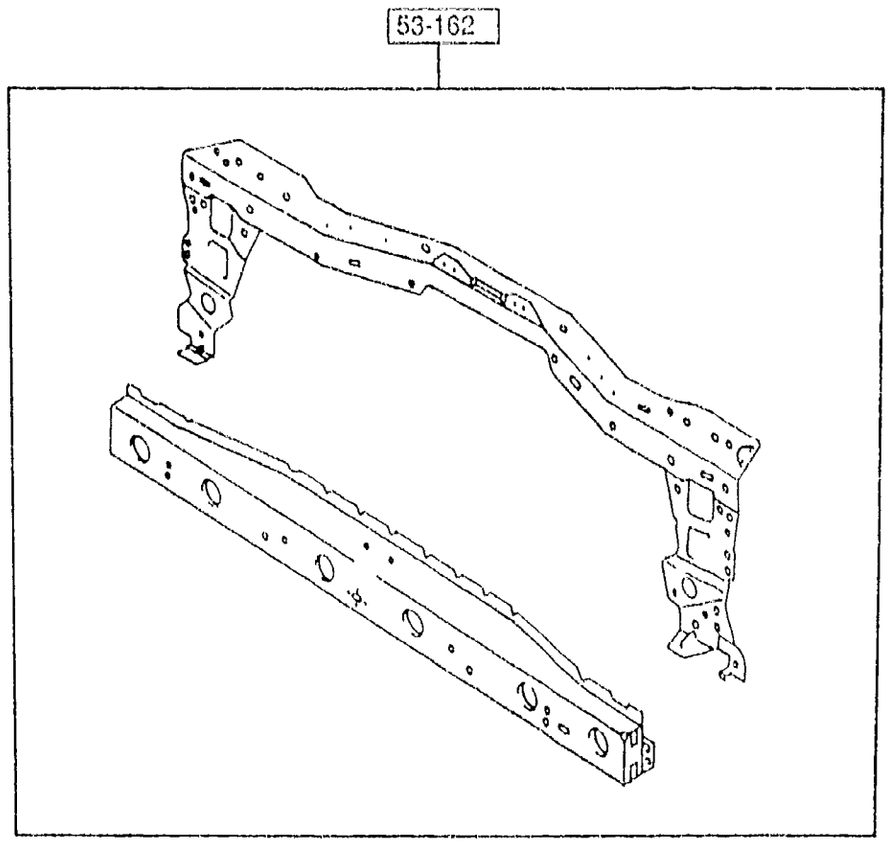

PART NO.	QTY	MODEL/RESTRICTION	MODEL/RESTRICTION	MODEL/RESTRICTION	FROM-TO
53-162		MEMBER,CROSS			
FD01-53-150A	1				

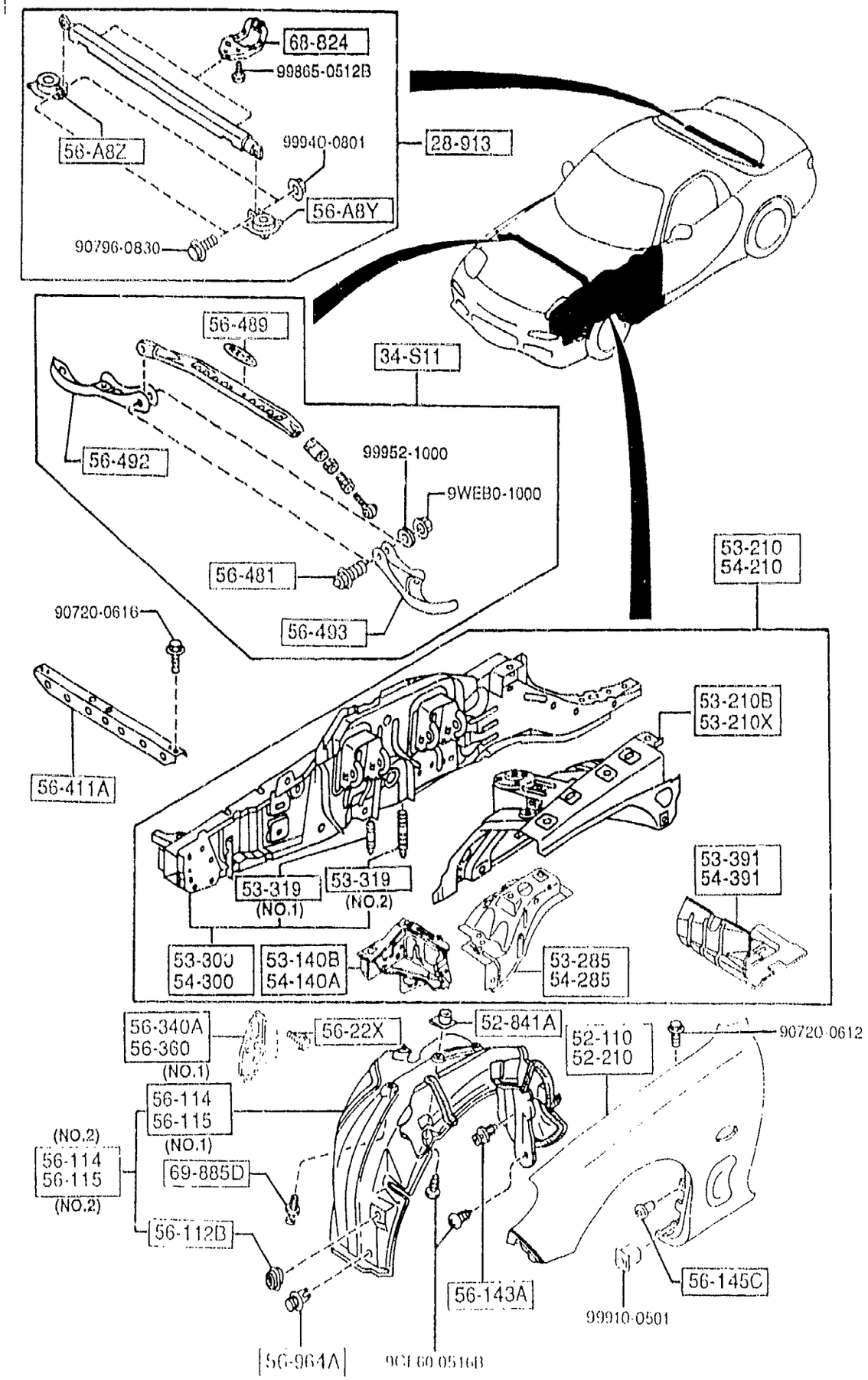

AUFA06

PART NO.	QTY	MODEL/RESTRICTION	MODEL/RESTRICTION	MODEL/RESTRICTION	FROM-TO
28-913		BAR,STRUT			
FD15-56-38Y	1				
34-S11		BAR,STRUT			
F111-56-48Z	1	(HARD SUSP)			
52-110		PANEL(R),FENDER-FRT.			
FD01-52-111D	1				
52-210		PANEL(L),FENDER-FRT.			
FD01-52-211D	1				
52-841A		NUT,CLIP			
B455-56-135	6				
53-140B		PANEL(R),SHROUD-SIDE			
FD01-53-12XJ	1				
53-210		PANEL(R),APRON & FRAME			
FD01-53-200A	1				
53-210B		PANEL(R),WHEEL APRON			
FD01-53-210E	1				
53-210X		PANEL(L),WHEEL APRON			
FD01-54-210F	1				
53-285		REINF.(R),WHL. APRON			
FD01-53-270A	1				
53-300		FRAME(R),SIDE-FRONT			
FD01-53-300M	1				
53-319		BOLT,MOUNT-MEMBER			
FD01-53-317A	2	(ILLUST. NO.1)			
FD01-53-318	2	(ILLUST. NO.2)			
53-391		BOX(R),TORQUE			
FD01-53-391	1				

CAT. AUFA06-04

1997-01

5320 -2 FENDER & WHEEL APRON PANELS

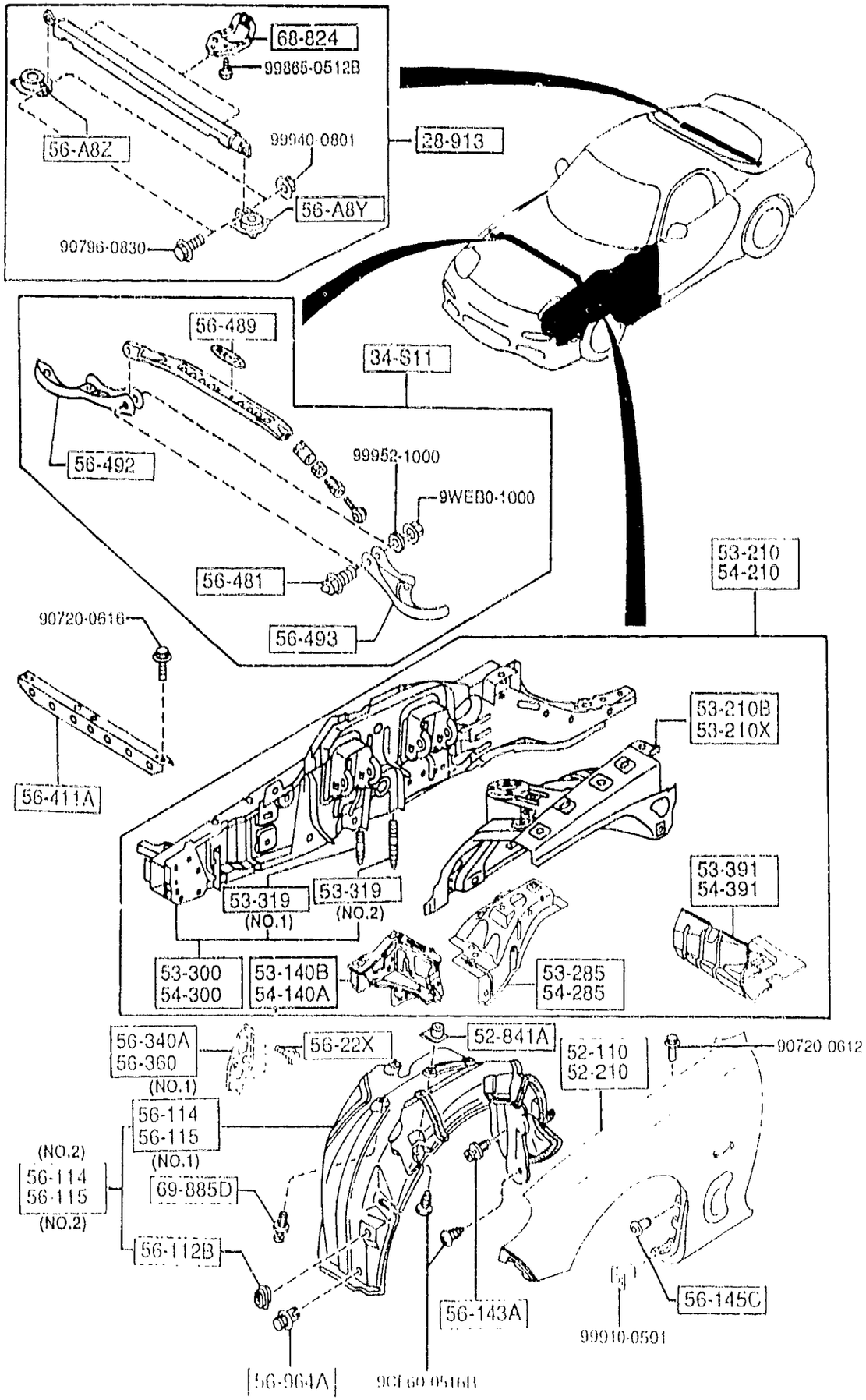

PART NO.	QTY	MODEL/RESTRICTION	MODEL/RESTRICTION	MODEL/RESTRICTION	FROM-TO
54-140A		PANEL(L),SHROUD-SIDE			
FD01-54-12XJ	1				
54-210		PANEL(L),APRON & FRAME			
FD01-54-200A	1				
54-285		REINF.(L),WHL. APRON			
FD01-54-270A	1				
54-300		FRAME(L),SIDE-FRONT			
FD01-54-300N	1				
54-391		BOX(L),TORQUE			
FD01-54-391	1				
56-A8Y		BRKT(L),STRUT BAR			
FD01-56-A8Y	1				
56-A8Z		BRKT(R),STRUT BAR			
FD01-56-A8Z	1				
56-112B		PLUG,DRAIN			
B092-56-053	2				
56-114		GUARD(R),MUD			
FD01-56-13ZF	1	(ILLUST. NO.1)			
FD01-56-130H	1	(ILLUST. NO.2)			
56-115		GUARD(L),MUD			
FD01-56-14ZF	1	(ILLUST. NO.1)			
FD01-56-140H	1	(ILLUST. NO.2)			
56-143A		RIVET,MUD GUARD			
B455-56-143	2				
56-145C		CLIP,MUD GUARD			
B455-56-145	2				
56-22X		BOLT,TIE DOWN HOOK-FRONT			
FB01-56-22X	6				

5320 FENDER & WHEEL APRON PANELS

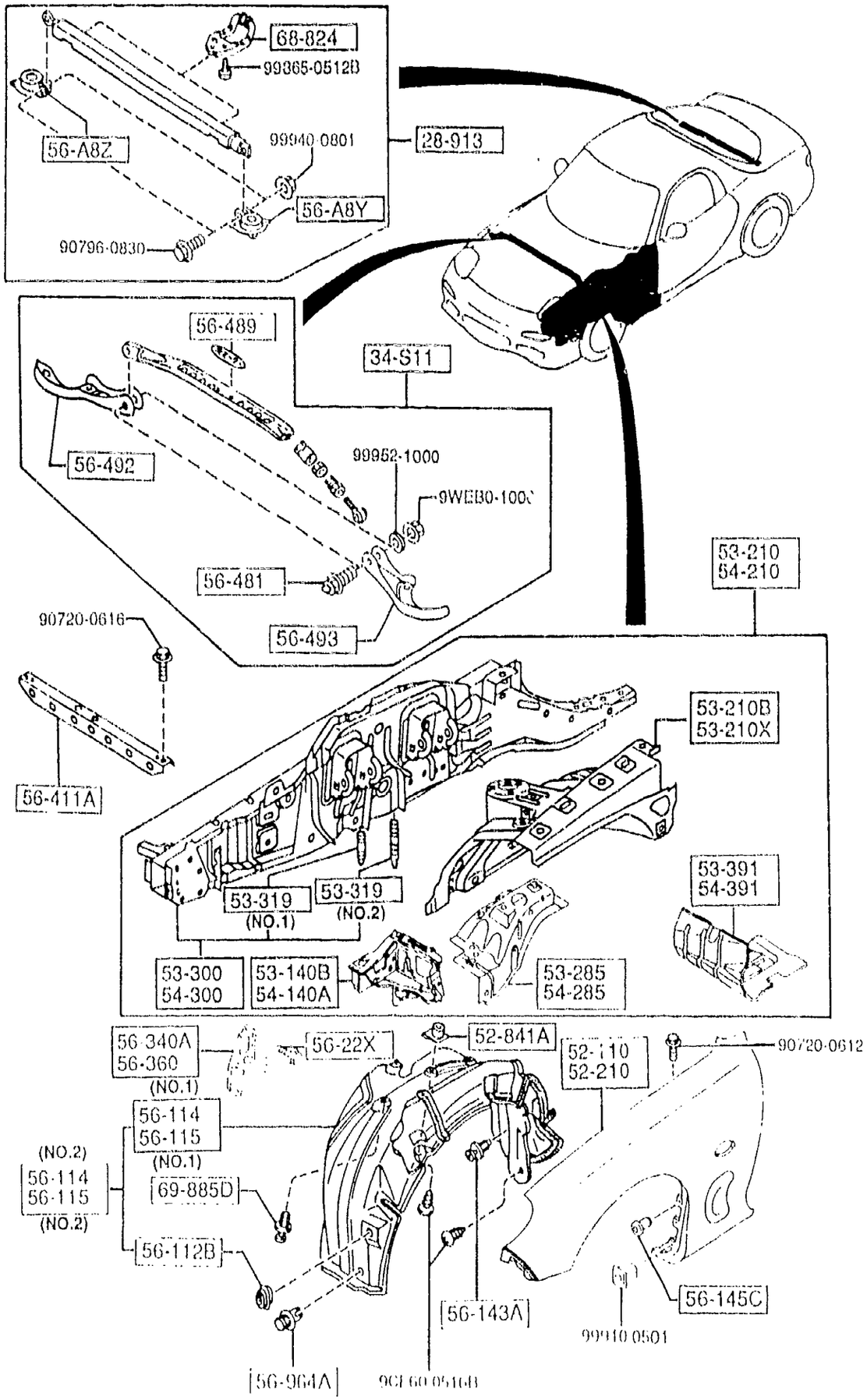

PART NO.	QTY	MODEL/RESTRICTION	MODEL/RESTRICTION	MODEL/RESTRICTION	FROM-TO
56-340A FD01-56-221	1	HOOK(R),TIE DOWN-FRONT			
56-360 FD01-56-231	1	HOOK(L),TIE DOWN-FRONT			
56-411A FD01-56-290A	1	MEMBER,CROSS			
56-481 FD03-56-491	2	BOLT,STRUT BAR (HARD SUSP)			
56-489 FD03-56-489	1	PLATE,LOGO-STRUT BAR (HARD SUSP)			
56-492 F111-56-482	1	PLATE(R),STRUT BAR (HARD SUSP)			
56-493 FD03-56-483A	1	PLATE(L),STRUT BAR (HARD SUSP)			
56-964A FB01-56-964	6	RIVET,SEAL PLATE-SHROUD			
68-824 FD01-68-305	2	HINGE			
69-885D NA01-56-145	16	FASTENER			

5330 -1 * DASH & COWL PANELS

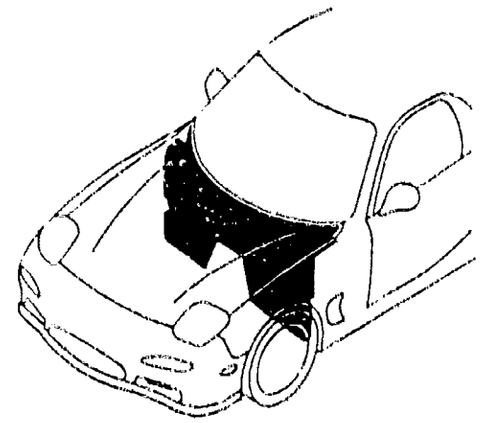

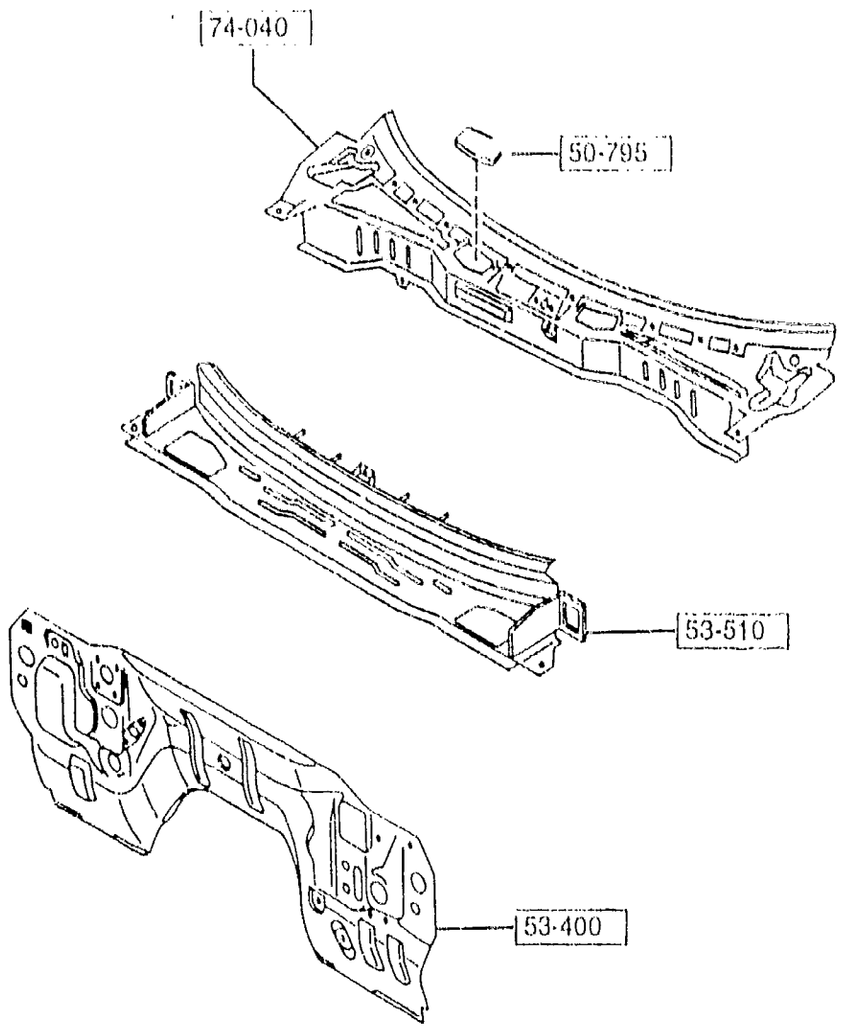

PART NO.	QTY	MODEL/RESTRICTION	MODEL/RESTRICTION	MODEL/RESTRICTION	FROM-TO
50-795		BAFFLE,COWL			
FD01-56-351	1				
53-400		PANEL,DASH-LOWER			
FD01-54-400E	1	(W/O SUN ROOF) (W/STEEL SUN ROOF)			
FD04-54-400E	1	(W/GLASS SUN ROOF)			
53-510		PANEL,DASH-UPPER			
FD15-53-510	1				
74-040		PANEL,COWL			
FD01-[illegible]-610A	1				

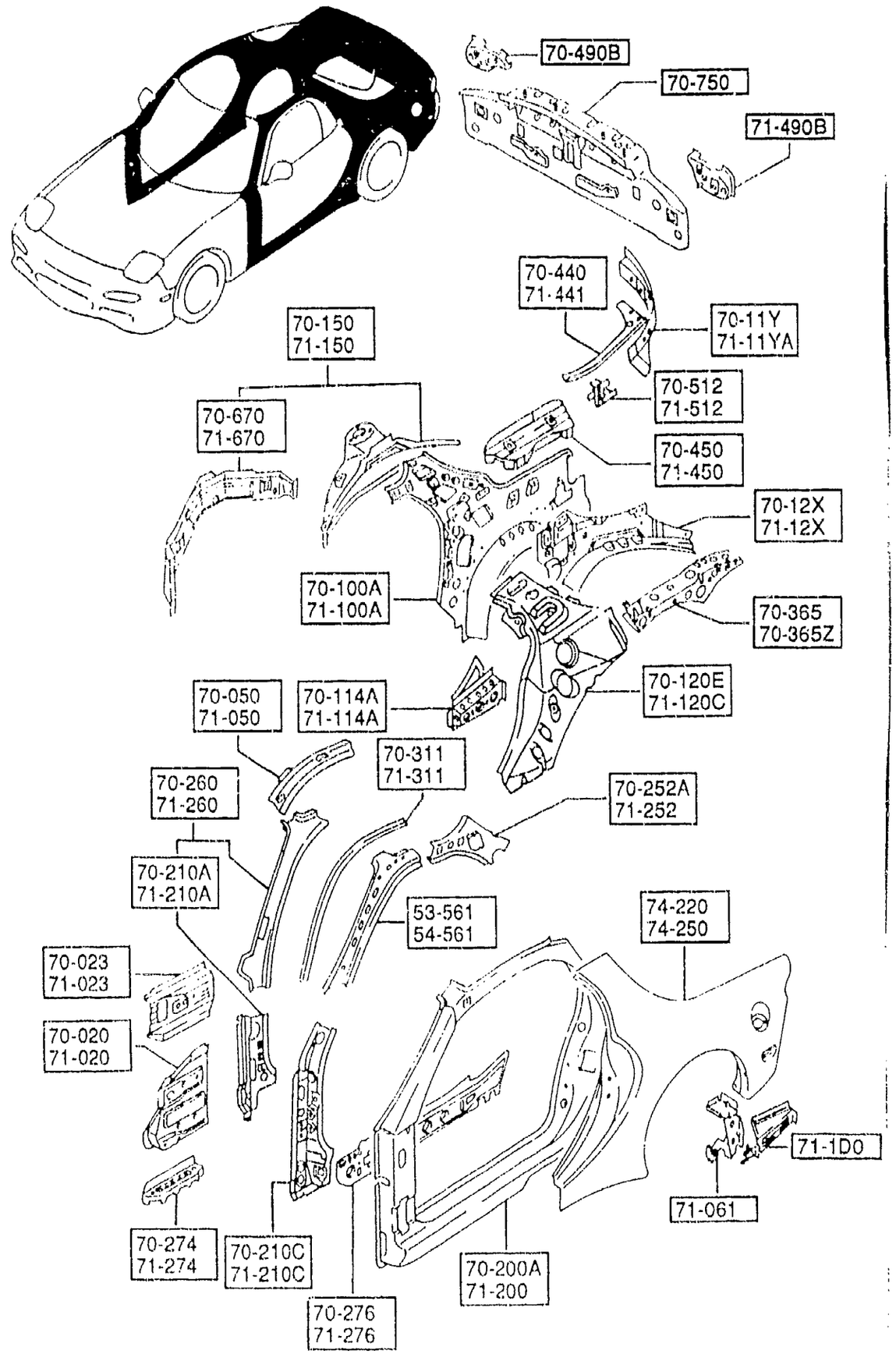

AUFA06

PART NO.	QTY	MODEL/RESTRICTION	MODEL/RESTRICTION	MODEL/RESTRICTION	FROM-TO
53-561 FD01-70-242B	1	REINF.(R),F. PILLAR INNER			
54-561 FD01-71-242B	1	REINF.(L),F. PILLAR INNER			
70-020 FD01-70-020B	1	PANEL(R),COWL SIDE			
70-023 FD01-70-651A	1	REINF.(R),COWL SIDE			
70-050 FD01-70-050	1	RAIL(R),ROOF-INNER			
70-100A FDY1-70-110A	1	PANEL(R),REAR PILLAR			
70-11Y FD01-70-11Y	1	PILLAR'C'(R),REAR-INNER			
70-114A FD15-70-11Z	1	JUNCTION(R),CORNER-Q/PANE			
70-12X FD01-70-12XA	1	REINF.(R),SUSPENSION HSG			
70-120E FD01-70-120B	1	REINF.(R),REAR PILLAR IN.			
70-150 FD01-70-150D	1	PANEL(R),WHEEL HOUSE			
70-200A FDY1-70-200	1	FRAME(R),SIDE-OUTER			
70-210A FD01-70-230A	1	PILLAR(R),HINGE			
70-210C FD01-70-030D	1	REINF.(R),HINGE			

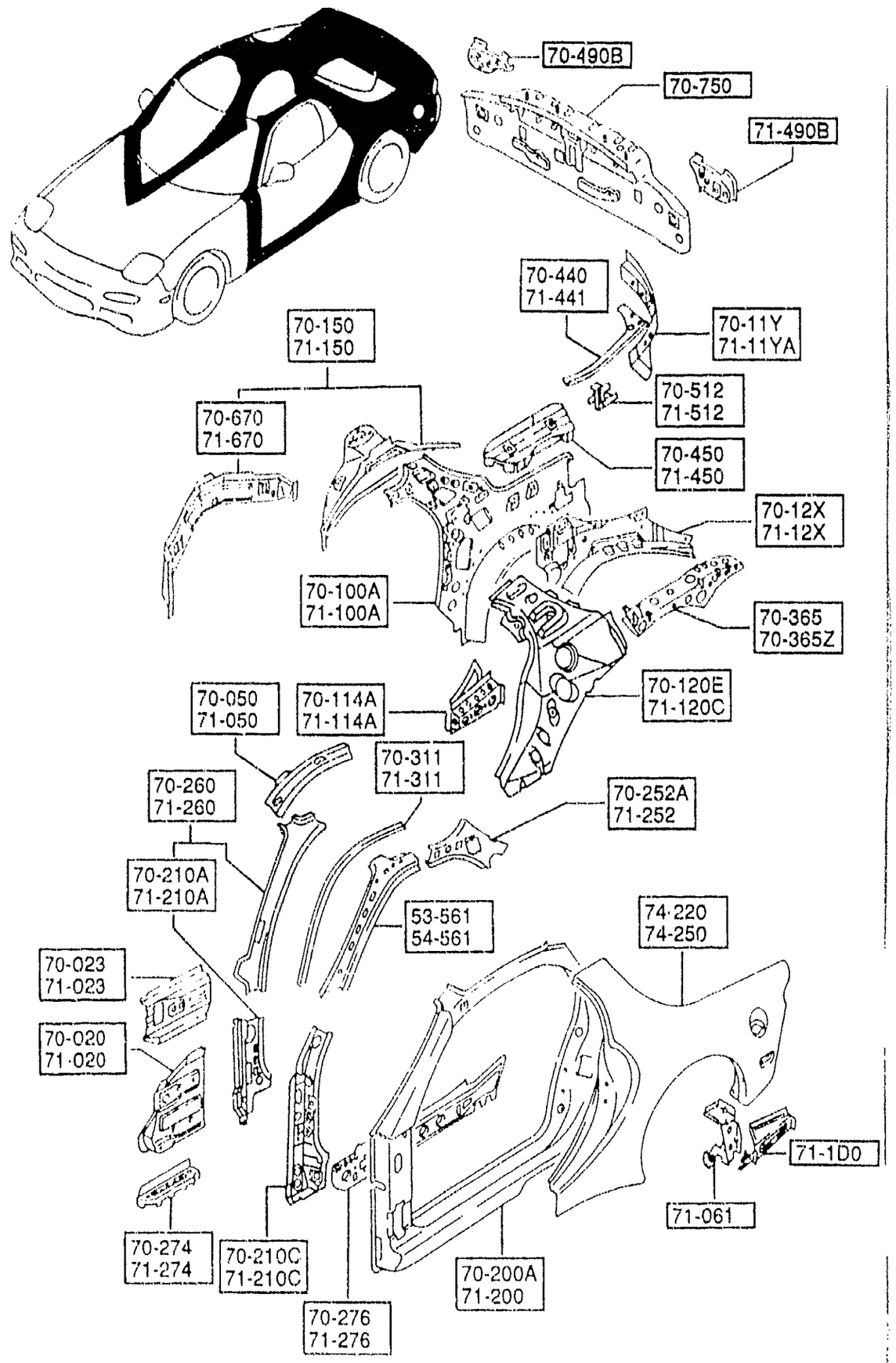

AUFA06

PART NO.	QTY	MODEL/RESTRICTION	MODEL/RESTRICTION	MODEL/RESTRICTION	FROM-TO
70-252A		REINF.(R),ROOF RAIL			
FD01-70-252A	1				
70-260		PILLAR(R),FRT.-INNER			
FDY1-70-24X	1	(W/O SUN ROOF)			
FDY4-70-24X	1	(W/STEEL SUN ROOF) (W/GLASS SUN ROOF)			
70-274		GUSSET(R),SIDE SILL OUTER			
FD01-70-274A	1				
70-276		REINF.(R),SIDE SILL			
FD01-70-272B	1				
70-311		RAIL(R),RAIN			
FD01-70-311A	1				
70-365		REINF.(R),BELT LINE-C.PIL			
FD01-70-130A	1				
70-365Z		REINF.(L),BELT LINE-C.PIL			
FD01-71-131A	1				
70-440		PLATE(R),CORNER			
FD01-70-440B	1				
70-450		PANEL(R),FLOOR SIDE			
FD01-70-1X1	1				
70-490B		BRACKET(R),LAMP			
FD01-70-490B	1				
70-512		BRACKET(R),TRIM-QTR PANEL			
FD01-70-119	1				
70-670		PLATE(R),CLOSING-QTR PANEL			
FD01-70-15XC	1				
70-750		PANEL,REAR END			
FD01-70-750C	1				

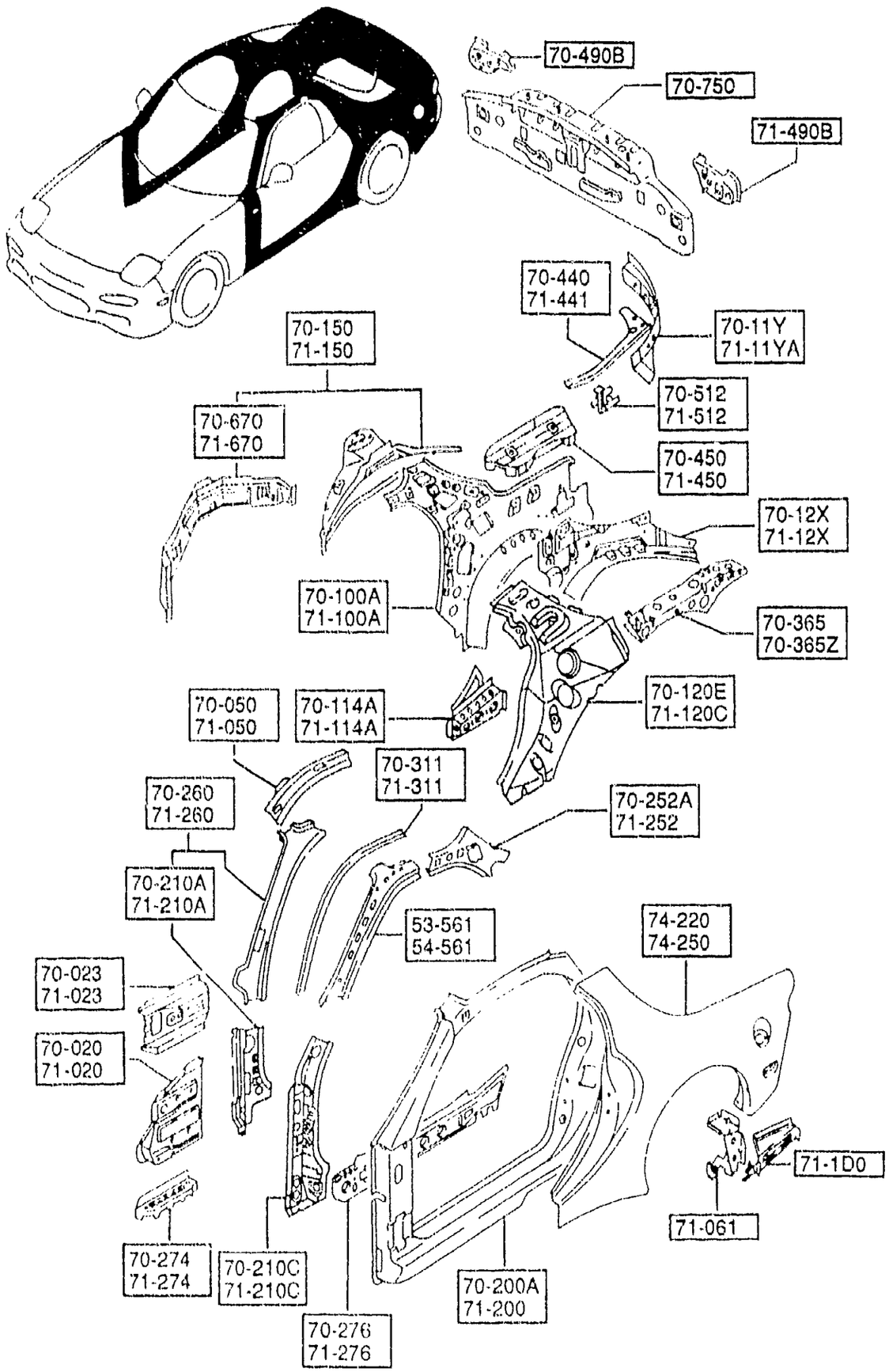

PART NO.	QTY	MODEL/RESTRICTION	MODEL/RESTRICTION	MODEL/RESTRICTION	FROM-TO
71-020 FD01-71-020B	1	PANEL(L),COWL SIDE			
71-023 FD01-71-651A	1	REINF.(L),COWL SIDE			
71-050 FD01-71-050	1	RAIL(L),ROOF-INNER			
71-061 FD01-71-1B0A	1	GUSSET(L),RR PILLAR			
71-1D0 FD01-71-1D0	1	REINF.(L),FLOOR SIDE			
71-100A FDY1-71-110A	1	PANEL(L),REAR PILLAR			
71-11YA FD01-71-11Y	1	PILLAR'C'(L),REAR-INNER			
71-114A FD15-71-11Z	1	JUNCTION(L),CORNER-Q/PANE			
71-12X FD01-71-12XB	1	REINF.(L),SUSPENSION HSG			
71-120C FD01-71-120B	1	REINF.(L),REAR PILLAR IN.			
71-150 FD01-71-150E	1	PANEL(L),WHEEL HOUSE			
71-200 FDY1-71-200	1	FRAME(L),SIDE-OUTER			
71-210A FD01-71-230A	1	PILLAR(L),HINGE			
71-210C FD01-71-030D	1	REINF.(L),HINGE			

5340 -4 * SIDE PANELS

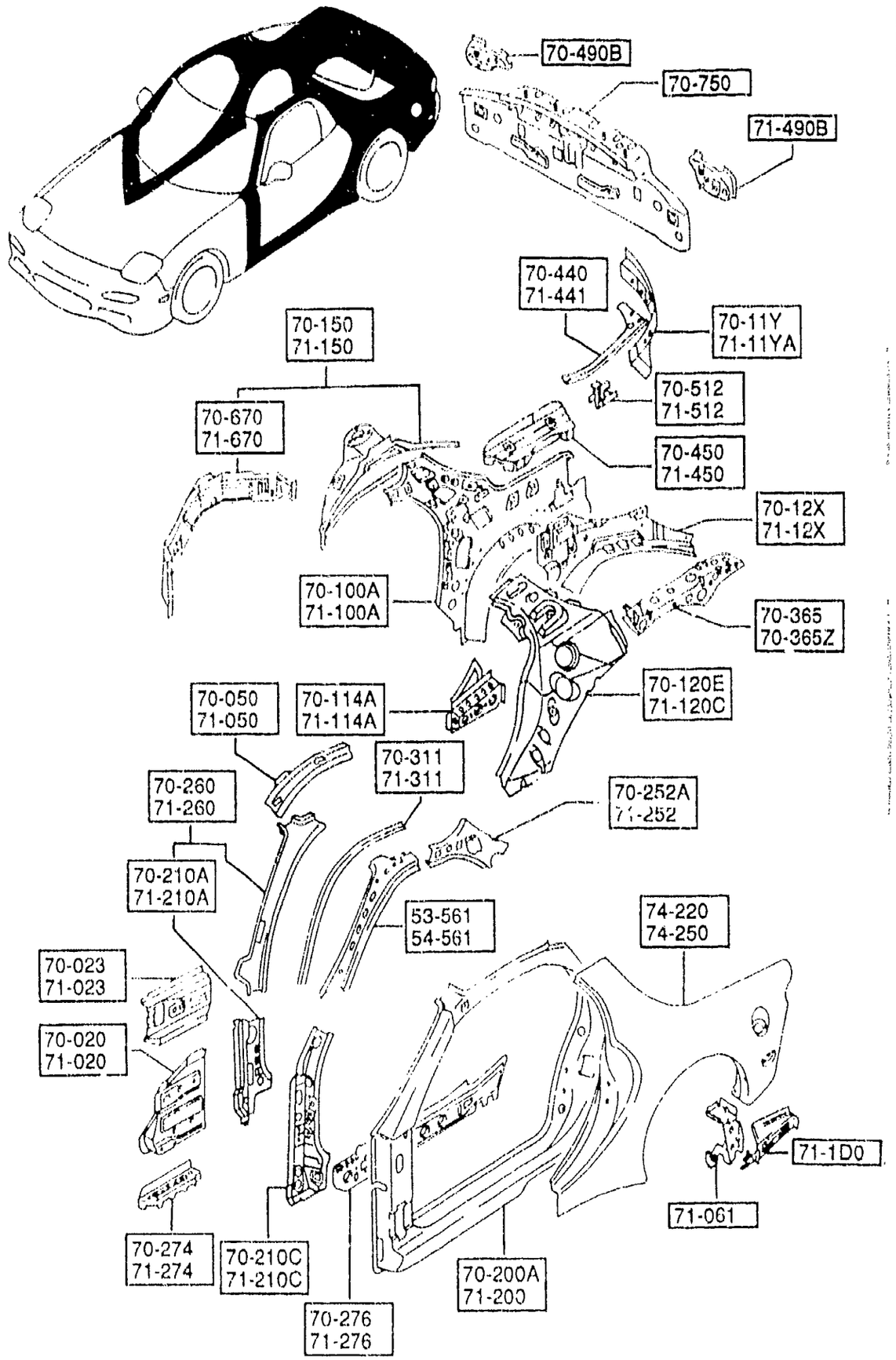

PART NO.	QTY	MODEL/RESTRICTION	MODEL/RESTRICTION	MODEL/RESTRICTION	FROM-TO
71-252		REINF.(L),ROOF RAIL			
FD01-71-252A	1				
71-260		PILLAR(L),FRT.-INNER			
FDY1-71-24X	1	(W/O SUN ROOF)			
FDY4-71-24X	1	(W/STEEL SUN ROOF) (W/GLASS SUN ROOF)			
71-274		GUSSET(L),SIDE SILL OUTER			
FD01-71-274A	1				
71-276		REINF.(L),SIDE SILL			
FD01-71-272B	1				
71-311		RAIL(L),RAIN			
FD01-71-311A	1				
71-441		PLATE(L),CORNER			
FD01-71-440B	1				
71-450		PANEL(L),FLOOR SIDE			
FD01-71-1X1	1				
71-490B		BRACKET(L),LAMP			
FD01-71-490B	1				
71-512		BRACKET(L),TRIM-QTR PANEL			
FD01-71-119	1				
71-670		PLATE(L),CLOSING-QTR PANEL			
FD01-71-15XD	1				
74-220		PANEL(R),FENDER-REAR			
FDY1-70-400B	1				
74-250		PANEL(L),FENDER-REAR			
FDY1-71-400B	1				

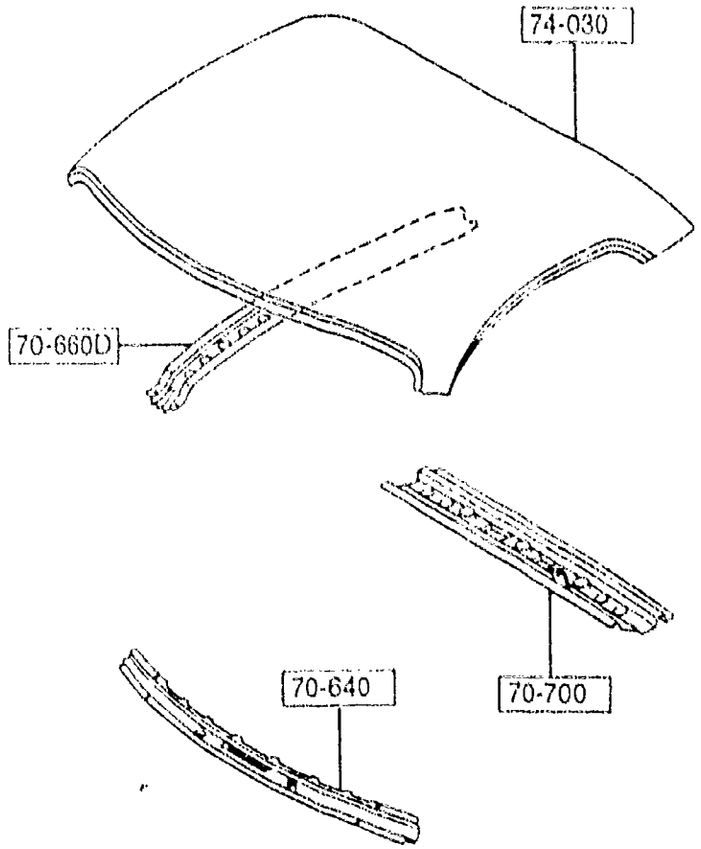

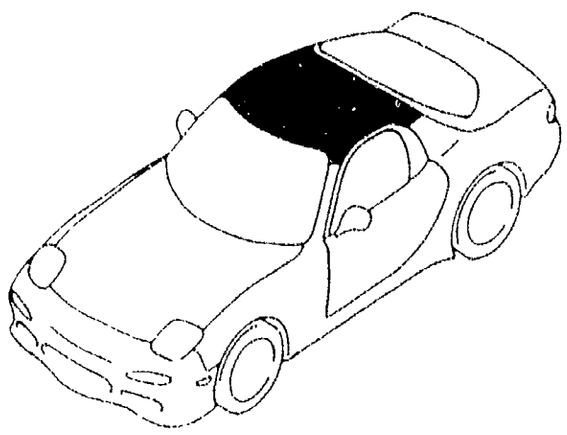

5360 -1 * ROOF PANELS

PART NO.	QTY	MODEL/RESTRICTION	MODEL/RESTRICTION	MODEL/RESTRICTION	FROM-TO
70-640		HEADER,FRONT			
FD01-70-640	1				
70-660D		REINF.,ROOF			
FD01-70-661	1	(W/O SUN ROOF)			
70-700		HEADER,REAR			
FD01-70-700B	1				
74-030		PANEL,ROOF			
FD04-70-600B	1	(W/STEEL SUN ROOF) (W/GLASS SUN ROOF)			
FD01-70-601A	1	(W/O SUN ROOF)			

5370 FLOOR PANELS

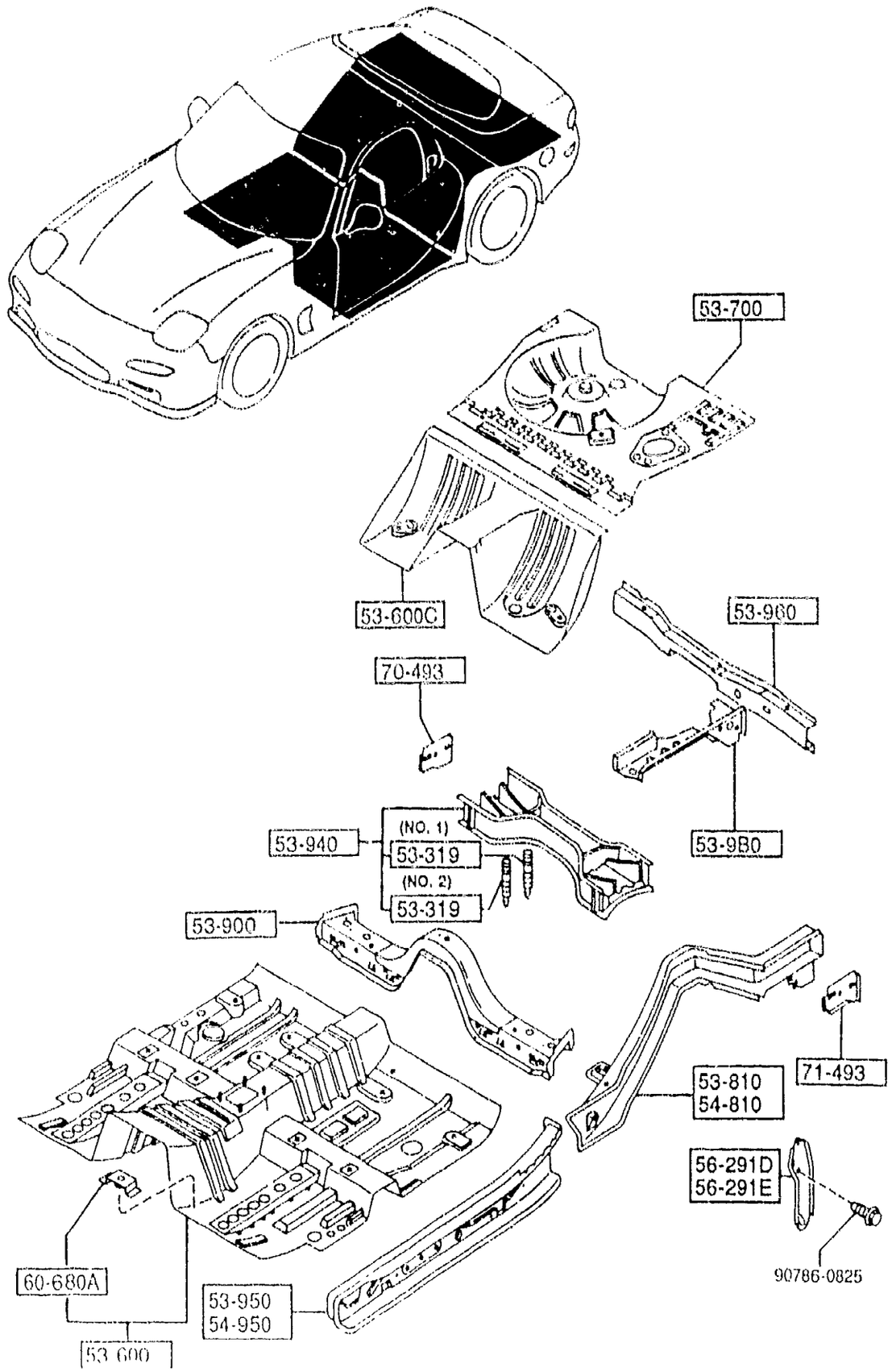

PART NO.	QTY	MODEL/RESTRICTION	MODEL/RESTRICTION	MODEL/RESTRICTION	FROM-TO
53-319		BOLT,MOUNT-MEMBER			
FD01-53-317A	2	(ILLUST. NO.1)			
FD01-53-318	2	(ILLUST. NO.2)			
53-600		PAN,FLOOR-FRONT			
FDY1-53-600A	1				
53-600C		PAN,FLOOR-CENTER			
FDY1-53-720	1				
53-700		PAN,FLOOR-REAR			
FDY1-53-710	1				
53-810		FRAME(R),REAR SIDE			
FD01-53-810F	1				
53-9B0		FRAME,CENTER-REAR SIDE			
FD01-53-9B0A	1				
53-900		MEMBER NO.3,CROSS			
FD01-53-910B	1				
53-940		MEMBER NO.4,CROSS			
FD01-53-930C	1				
53-950		PANEL(R),SIDE SILL			
FD01-53-950B	1				
53-960		MEMBER NO.5,CROSS			
FD01-53-940A	1				
54-810		FRAME(L),REAR SIDE			
FD01-54-810H	1				
54-950		PANEL(L),SIDE SEAL			
FD01-54-950A	1				
56-291D		HOOK(R),TIE DOWN			
FD01-56-251B	1				

5370 FLOOR PANELS

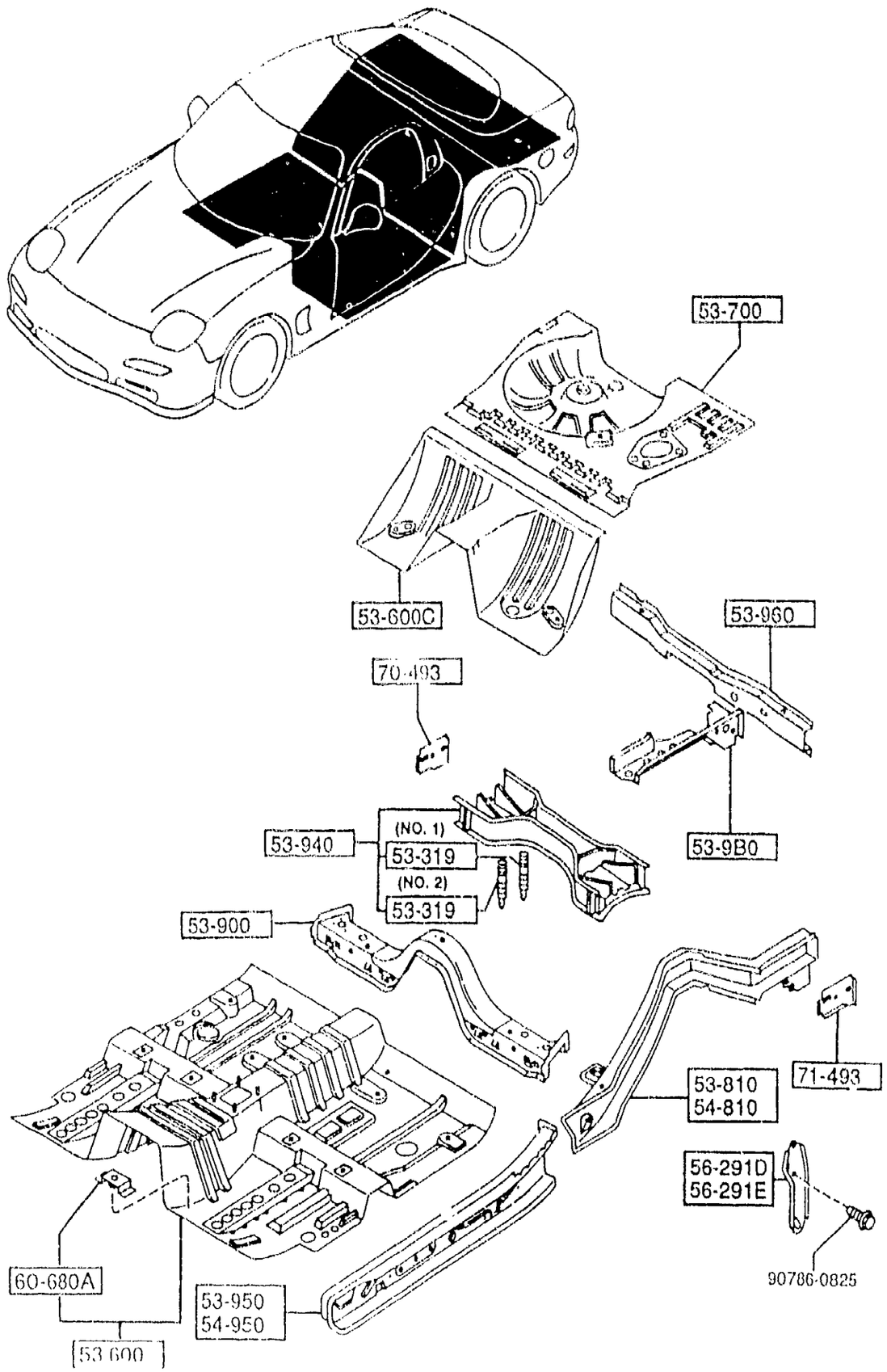

PART NO.	QTY	MODEL/RESTRICTION	MODEL/RESTRICTION	MODEL/RESTRICTION	FROM-TO
56-291E FD01-56-252B	1	HOOK(L),TIE DOWN			
60-680A 0305-53-160	2	BRACKET,FLOOR			
70-493 FD01-53-781B	1	PLATE(R),CLOSING-R.FENDER			
71-493 FD01-54-781B	1	PLATE(L),CLOSING-R.FENDER			

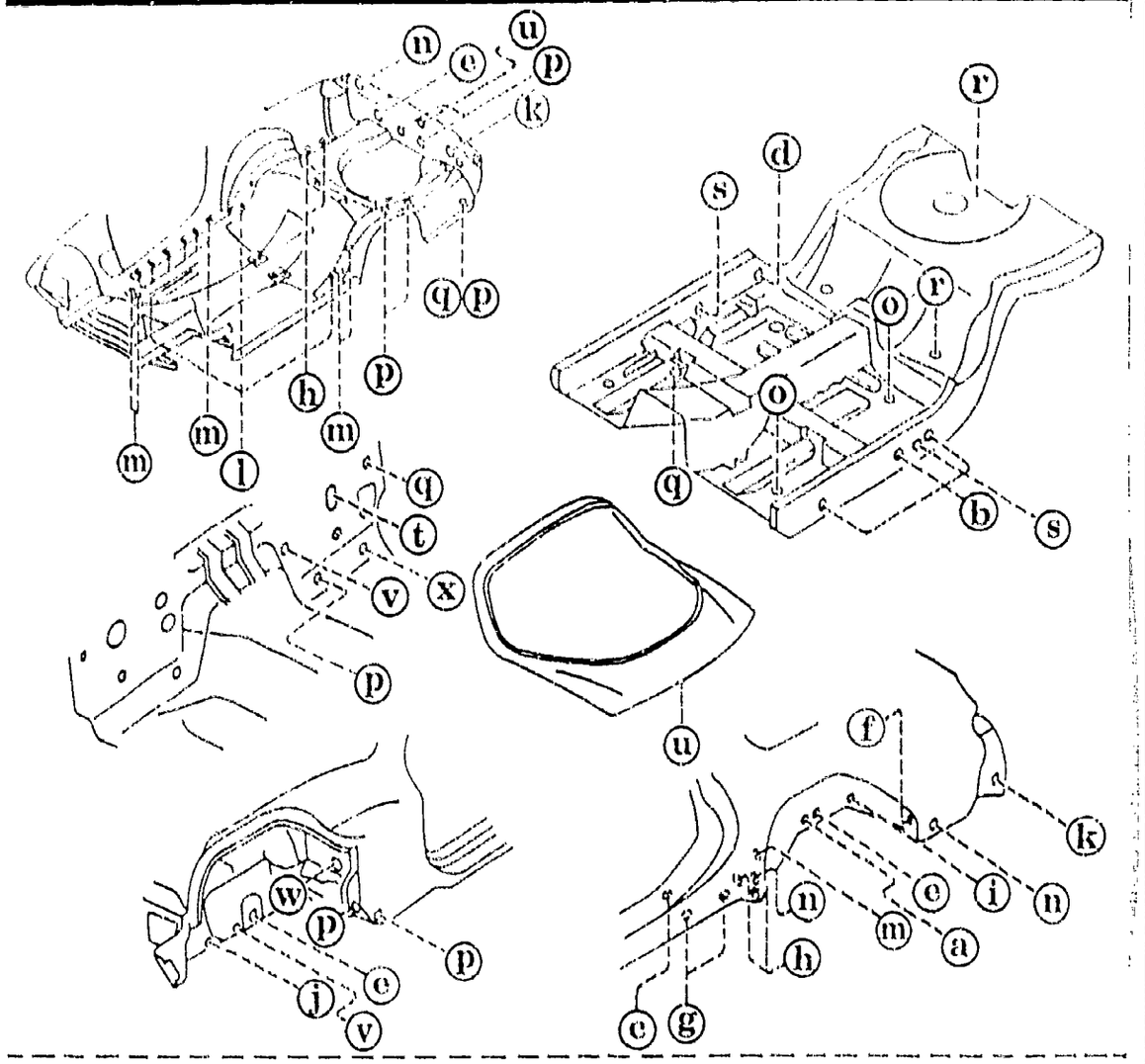

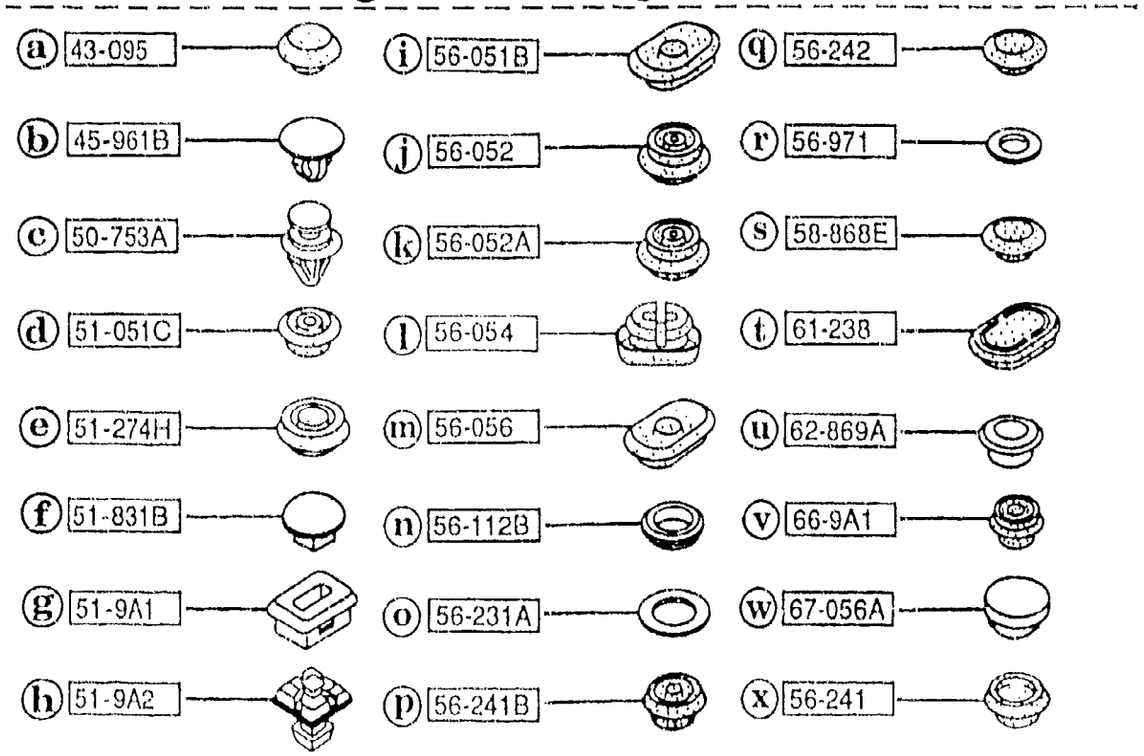

AUFA06

PART NO.	QTY	MODEL/RESTRICTION	MODEL/RESTRICTION	MODEL/RESTRICTION	FROM-TO
43-095		GROMMET			
H001-43-095	2				
45-961B		CAP			
H002-45-961	3	(W/O HEAD LAMP CLEANER)			
50-753A		FASTENER			
FD01-50-753	2				
51-051C		PLUG,HOLE			
BR70-51-264	1	(W/O HEAD LAMP CLEANER)			
51-274H		GROMMET			
BF67-51-261	6				
51-831B		PLUG,HOLE-FLAP			
DA14-51-831	2				
51-9A1		PLUG'A',BLIND-S.SPOILER			
FB03-51-9A1	4				
51-9A2		PLUG'B',BLIND-S.SPOILER			
FB03-51-9A2	8				
56-051B		COVER,HOLE			
GA5R-56-051	2				
56-052		PLUG,DRAIN			
B092-56-052	2	D=12MM			
56-052A		PLUG,HOLE-F.SIDE FRAME			
H26U-56-052	3				
56-054		PLUG,HOLE			
FD01-56-051	4				
56-056		COVER,HOLE			
GA5R-56-052	22				

CAT. AUFA06-04 1997-01

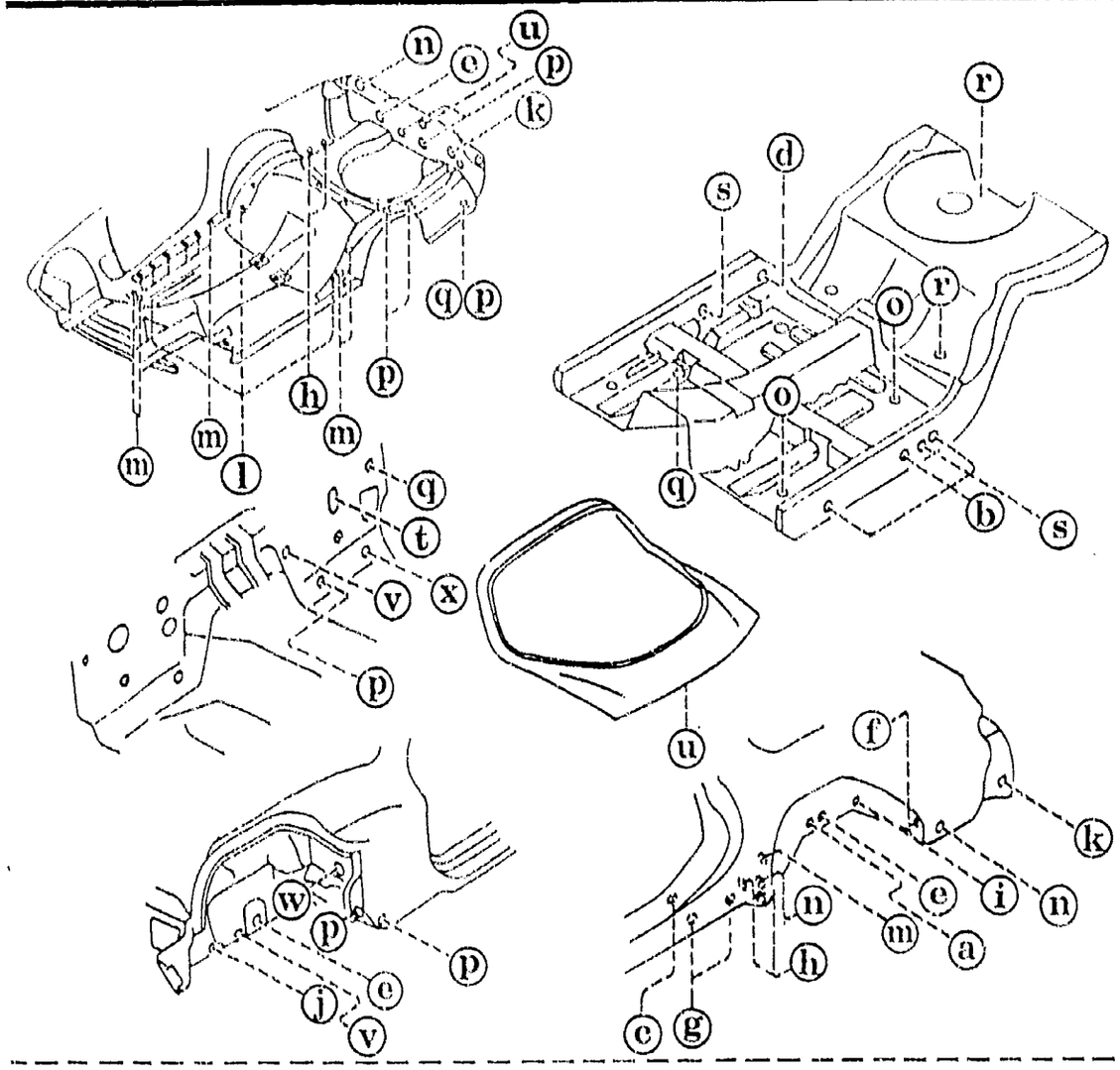

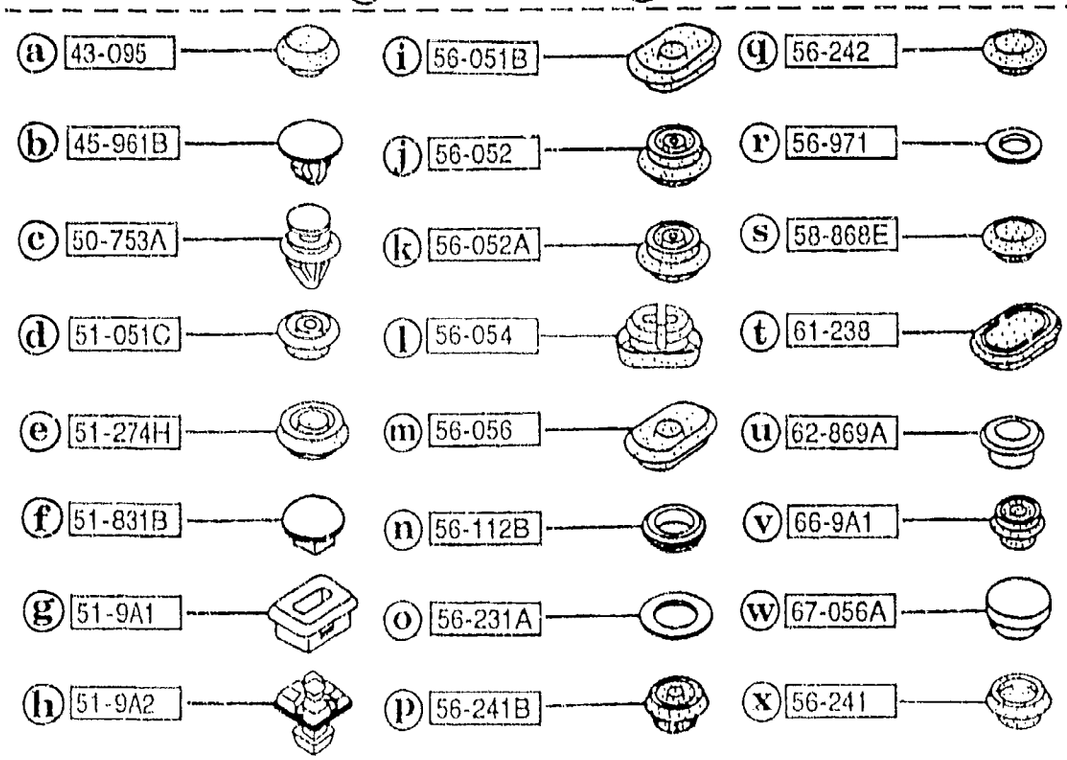

AUFA06

PART NO.	QTY	MODEL/RESTRICTION	MODEL/RESTRICTION	MODEL/RESTRICTION	FROM-TO
56-112B		PLUG,DRAIN			
FB01-56-057	6				
56-231A		COVER,SERVICE HOLE			
8173-56-053	4				
56-241		PLUG,DRAIN			
0118-56-241	1	(W/AIR CON.)			
0118-56-241	2	(W/O AIR CON.)			
56-241B		PLUG			
B001-56-051	10				
56-242		PLUG,DRAIN			
0118-56-242B	6				
56-971		COVER,HOLE			
0866-56-971	3				
58-868E		PLUG,SERVICE COVER			
0559-58-868	2				
61-238		GROMMET,REAR FLOOR			
H260-61-238	1				
62-869A		PLUG,DRAIN-LIFT GATE UP.			
B216-62-869	2				
66-9A1		COVER,HOLE-ANTENNA			
KA01-66-9A1	2	(W/O SUN ROOF) (W/STEEL SUN ROOF)			
KA01-66-9A1	3	(W/GLASS SUN ROOF)			
67-056A		COVER,HOLE			
FD01-67-HD1	1	(W/O HEAD LAMP CLEANER)			

5390 FLOOR ATTACHMENTS

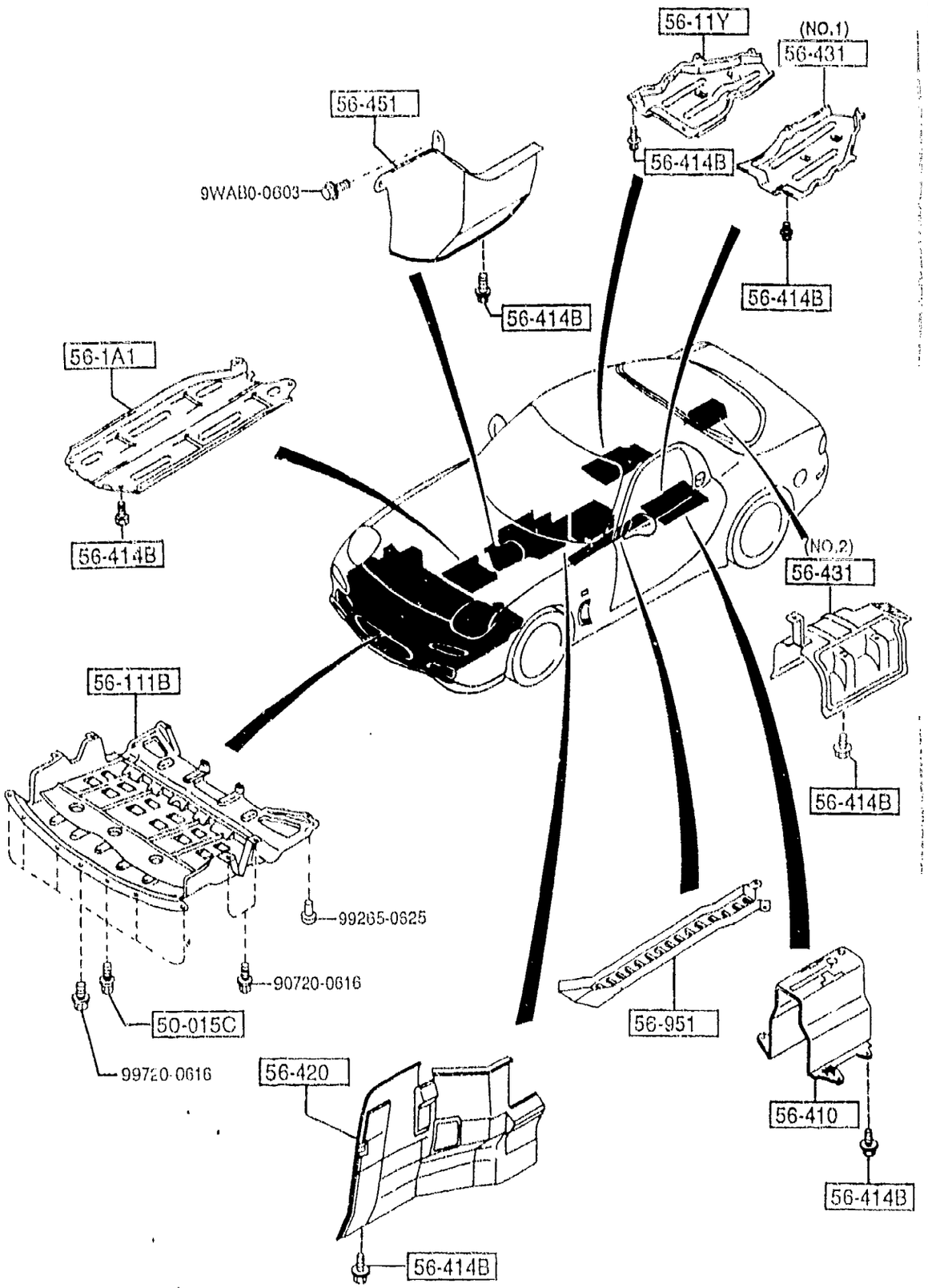

PART NO.	QTY	MODEL/RESTRICTION	MODEL/RESTRICTION	MODEL/RESTRICTION	FROM-TO
50-015C		BOLT			
BR70-50-0Z2	6				
56-1A1		COVER,T/MISSION			
FD01-56-1A1C	1	(MT)			
56-11Y		COVER,UNDER-REAR			
FD01-56-113A	1				
56-111B		COVER,UNDER-FRONT			
FD01-56-1B0B	1				
56-410		INSULATOR,HEAT-FRONT			
FD01-56-430C	1				
56-414B		BOLT,INSULATOR,FRT HEAT			
FB01-56-414	25	(AT)			
FB01-56-414	29	(MT)			
56-420		INSULATOR,FRONT			
FD01-56-420C	1				
56-431		INSULATOR,HEAT			
FD01-56-114A	1	(ILLUST. NO.1)			
FD01-56-450	1	(ILLUST. NO.2)			
56-451		INSULATOR			
FD01-56-411	1				
56-951		PROTECTOR			
FD01-56-181	1				

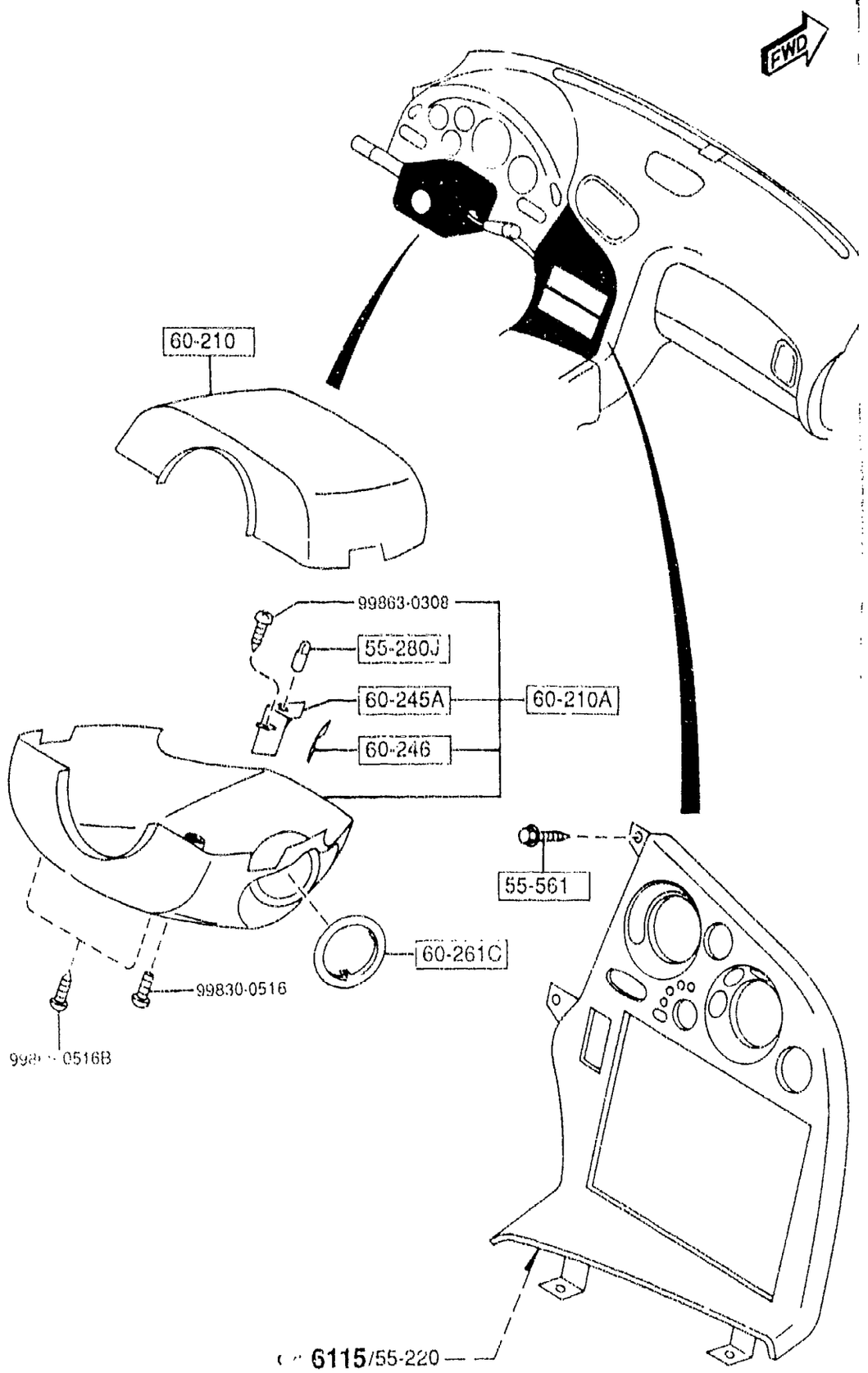

5500 -1 * DASHBOARD EQUIPMENTS

PART NO.	QTY	MODEL/RESTRICTION	MODEL/RESTRICTION	MODEL/RESTRICTION	FROM-TO
55-280J		BULB			
B456-60-223	1				
55-561		BOLT,INST. PANEL			
B455-55-561	4				
60-210		COVER,COLUMN-UPPER			
FD01-60-221C	1				
00	INT-	FE5 FE6 FE7 BLACK			
60-210A		COVER,COLUMN-LOWER			
FD01-60-230D	1				
00	INT-	FE5 FE6 FE7 BLACK			
60-245A		CASE,LAMP			
FD01-60-245A	1				
60-246		LENS,COLUMN COVER			
FD01-60-246	1				
60-261C		RING SET-KEY CYLINDER			
LA01-60-261	1				-5801
KB75-60-261A	1				5801-

SCAT FD333 -400230

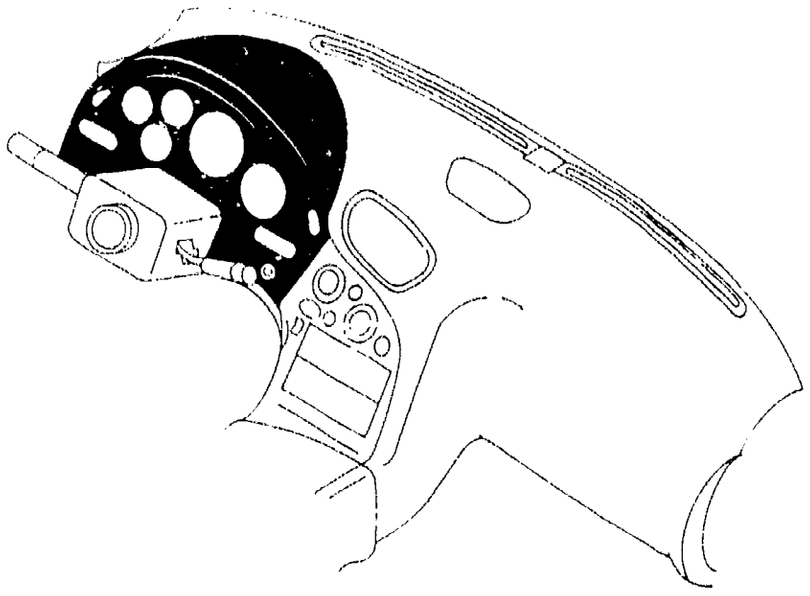

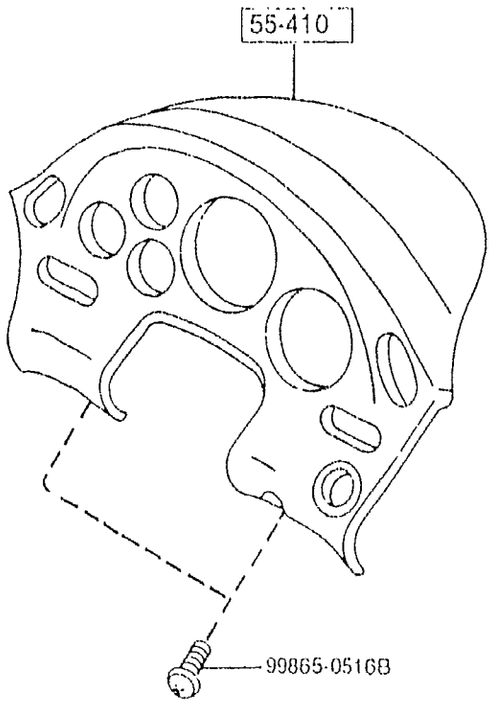

5520 -1 * METER HOOD

PART NO.	QTY	MODEL/RESTRICTION	MODEL/RESTRICTION	MODEL/RESTRICTION	FROM-TO
55-410		HOOD,METER			
FD15-55-420	1				

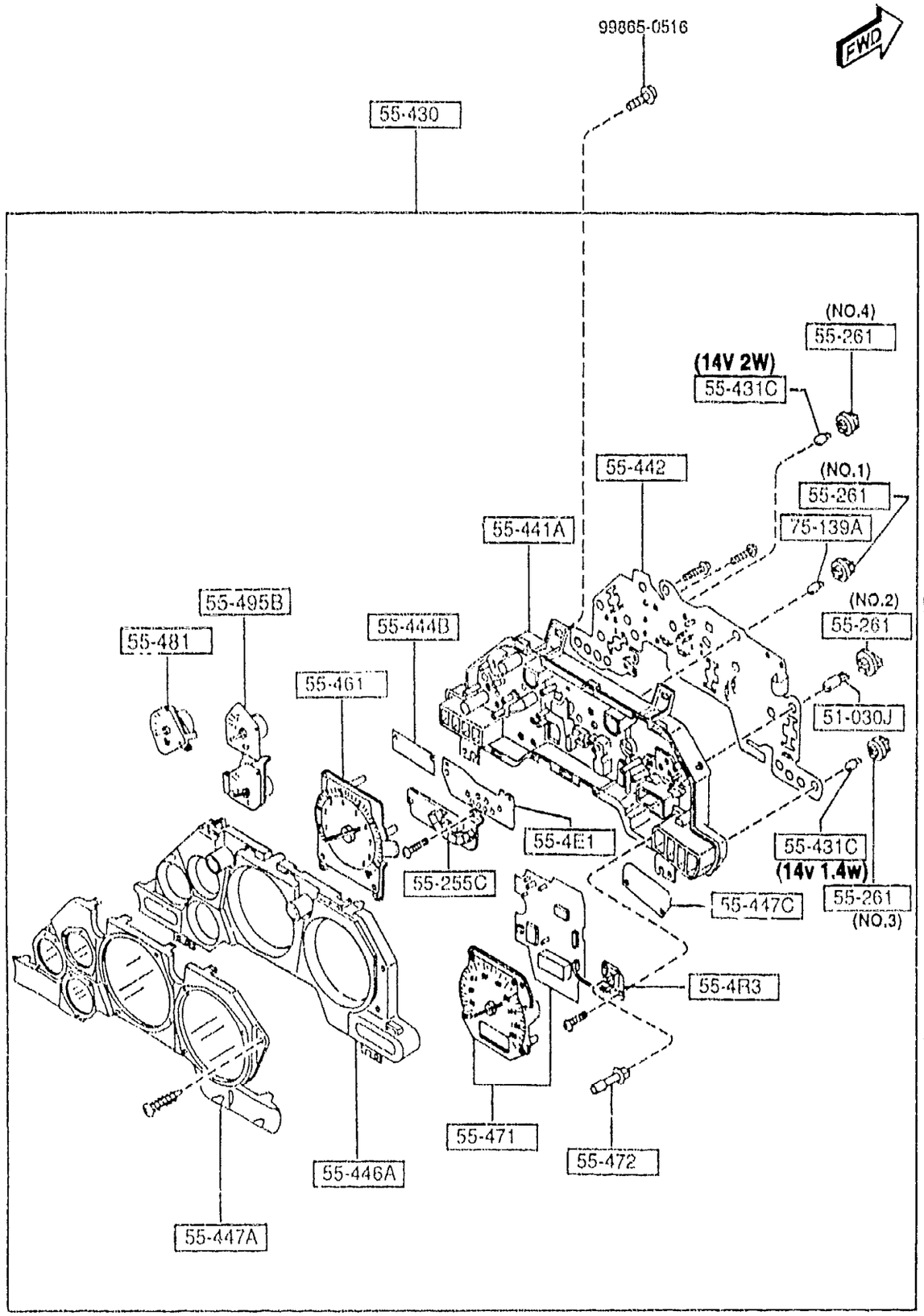

5540 -1 METER COMPONENTS

PART NO.	QTY	MODEL/RESTRICTION	MODEL/RESTRICTION	MODEL/RESTRICTION	FROM-TO
51-030J		BULB			
99701-6030	4	12V 3.4W			
55-255C		CASE,WARNING UNIT			
FD01-55-4W1	1	((MT)>(NOR. SUSP))			
FD02-55-4W1	1	(AT)			
55-261		SOCKET			
B456-55-261	6	12V 3W (ILLUST. NO.1)			
FD01-55-261	4	(ILLUST. NO.2)			
FD02-55-261	6	(ILLUST. NO.3) ((MT)>(HARD SUSP)) (AT)			
FD02-55-261	7	(ILLUST. NO.3) ((MT)>(NOR. SUSP))			
FD03-55-261	2	(ILLUST. NO.4)			
55-4E1		INDICATOR,ECONOMY-METER			
FD02-55-4E1	1	(AT)			
55-4R3		SWITCH			
FD01-55-487	1				
55-430		METER SET			
FD15-55-430D	1	((MT)>(NOR. SUSP))			
FD16-55-430D	1	((MT)>(HARD SUSP))			
FD17-55-430D	1	(AT)			
55-431C		BULB'B',WARNING UNIT			
FD01-55-431	2	14V/2W			
FD02-55-431	6	14V/1.4W ((MT)>(HARD SUSP)) (AT)			
FD02-55-431	7	14V/1.4W ((MT)>(NOR. SUSP))			
55-441A		CASE,METER			
FD01-55-441	1				

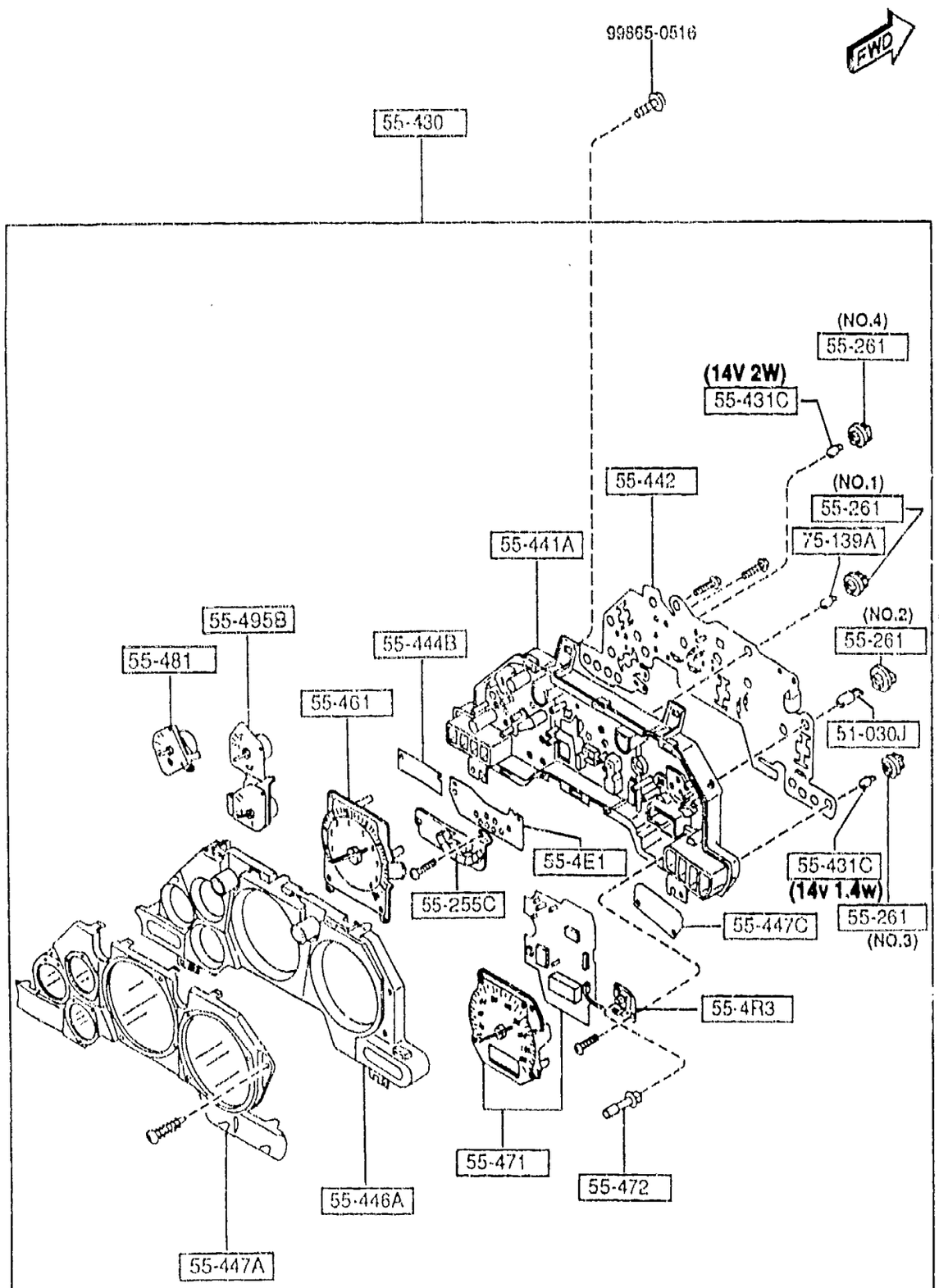

PART NO.	QTY	MODEL/RESTRICTION	MODEL/RESTRICTION	MODEL/RESTRICTION	FROM-TO
55-442		PLATE NO.1,PRINT			
FD01-55-442	1	((MT)>(NOR. SUSP))			
FD02-55-442	1	(AT)			
FD03-55-442	1	((MT)>(HARD SUSP))			
55-444B		LENS,WARNING			
FD01-55-444A	1				
55-446A		PLATE,WINDOW			
FD01-55-446	1				
55-447A		GLASS,FRONT-WARNING UNIT			
FD01-55-447A	1				
55-447C		LENS,WARNING			
FD01-55-445	1				
55-461		TACHOMETER			
FD15-55-461A	1	((MT)>(NOR. SUSP))			
FD16-55-461A	1	((MT)>(HARD SUSP))			
FD17-55-461A	1	(AT)			
55-471		SPEEDOMETER			
FD15-55-471	1	(MT)			
FD17-55-471	1	(AT)			
55-472		KNOB,TRIPMETER			
FD01-55-473	1				
55-481		METER,FUEL			
FD01-55-481	1				
55-495B		METER,TEMP.-OIL			
FD01-55-491	1				
75-139A		BULB			
B456-55-431	6	12V 3W			

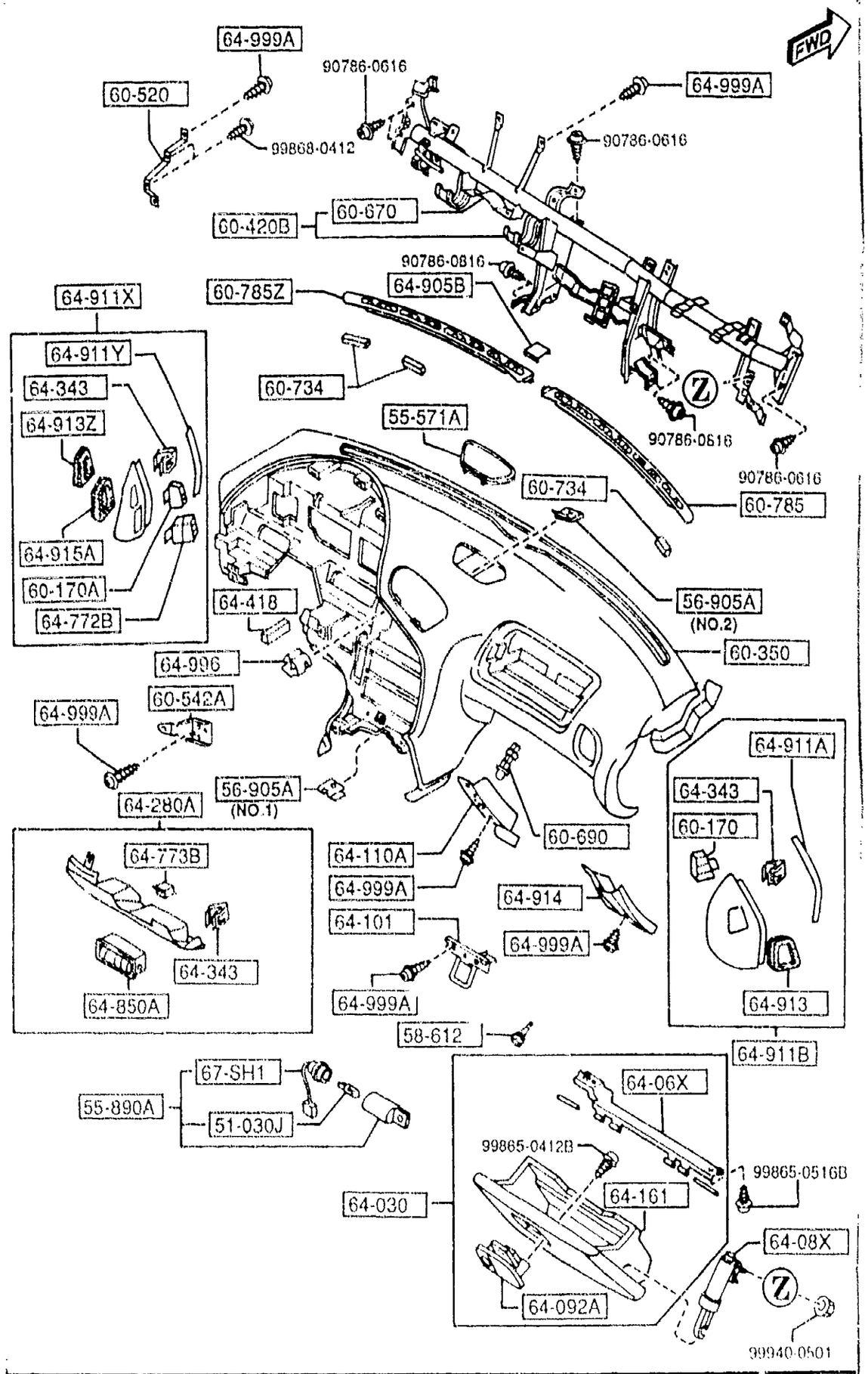

PART NO.	QTY	MODEL/RESTRICTION	MODEL/RESTRICTION	MODEL/RESTRICTION	FROM-TO
51-030J		BULB			
3625-75-139	1	12V 1.4W			
55-571A		GRILLE,SPEAKER			
FD01-55-530A	1				
00	INT-	FE5 FE6 FE7 BLACK			
55-890A		LAMP,GLOVE BOX			
FD15-64-170A	1				
56-905A		NUT,SPRING			
B092-60-408	8	(ILLUST. NO.1)			
E016-60-408	3	(ILLUST. NO.2)			-4A03
E016-60-408	2	(ILLUST. NO.2)			4A03-
58-612		CUSHION,RUBBER			
B092-64-046	2				
60-170		NOZZLE(R),SIDE-DEMISTER			
FD01-60-182	1				
60-170A		NOZZLE(L),SIDE-DEMISTER			
FD01-60-192	1				
60-350		PAD,CRASH			
FD15-60-350D	1				
02	INT-	FE5 FE6 FE7 BLACK			
60-420B		MEMBER,CRASH PAD			
FD15-60-420G	1				
60-520		BRACKET,CENTER			
FD01-60-534	1				
60-542A		BRACKET,CENTER PANEL			
FD01-60-582	1				
60-670		BRACKET,STEERING			
FD01-60-670	1				

4A03 FD333 -400014

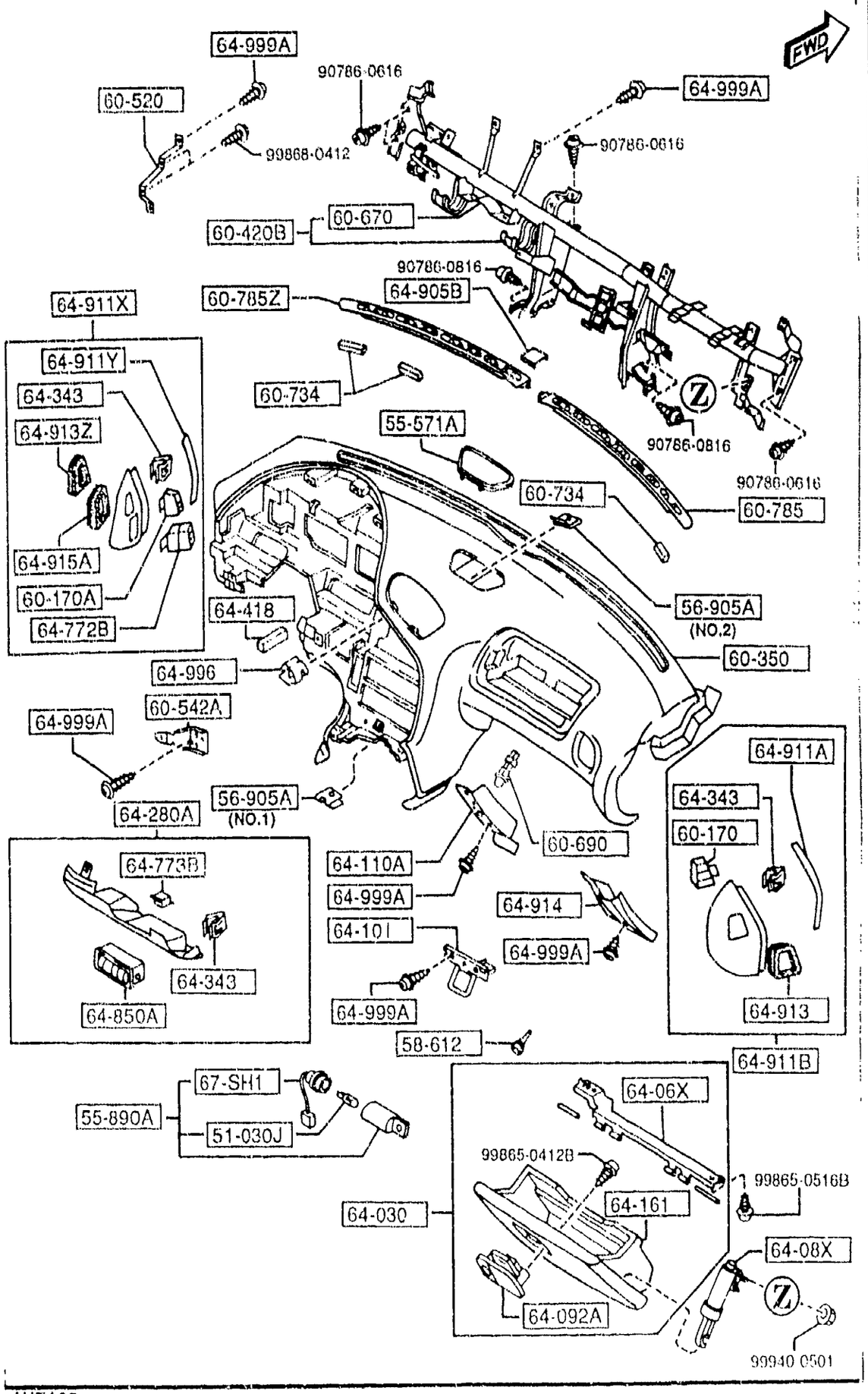

AUFA06

PART NO.	QTY	MODEL/RESTRICTION	MODEL/RESTRICTION	MODEL/RESTRICTION	FROM-TO
60-690		SWITCH,GLOVE TRAY			
J002-66-540A	1				
60-734		PAD NO.1,GARNISH-UPPER			
FD01-60-734A	3				
60-785		GRILLE(R),DEF.NOZZLE			
FD01-60-780	1				
02	INT-	FE5 FE6 FE7 BLACK			
60-785Z		GRILLE(L),DEF.NOZZLE			
FD01-60-790	1				
02	INT-	FE5 FE6 FE7 BLACK			
64-030		BOX,GLOVE			
FD15-64-030F	1				-4A01
02	INT-	FE5 FE6 FE7 BLACK			
FD15-64-030G	1				4A01-
02	INT-	FE5 FE6 FE7 BLACK			
64-06X		HINGE,GLOVE LID			
FD15-64-071A	1				
64-08X		DAMPER,GLOVE BOX			
FD15-64-08XB	1				
64-092A		LOCK,GLOVE LID			
BC5E-64-090B	1				
00	INT-	FE5 FE6 FE7 BLACK			
64-101		STRIKER			
FD15-64-10XC	1				
64-110A		COVER(R),GLOVE			
FD15-64-117A	1				
64-161		BOX,GLOVE			
FD15-64-161C	1				

4A01 FD333 -400014

CAT. AUFA06-04

1997-01

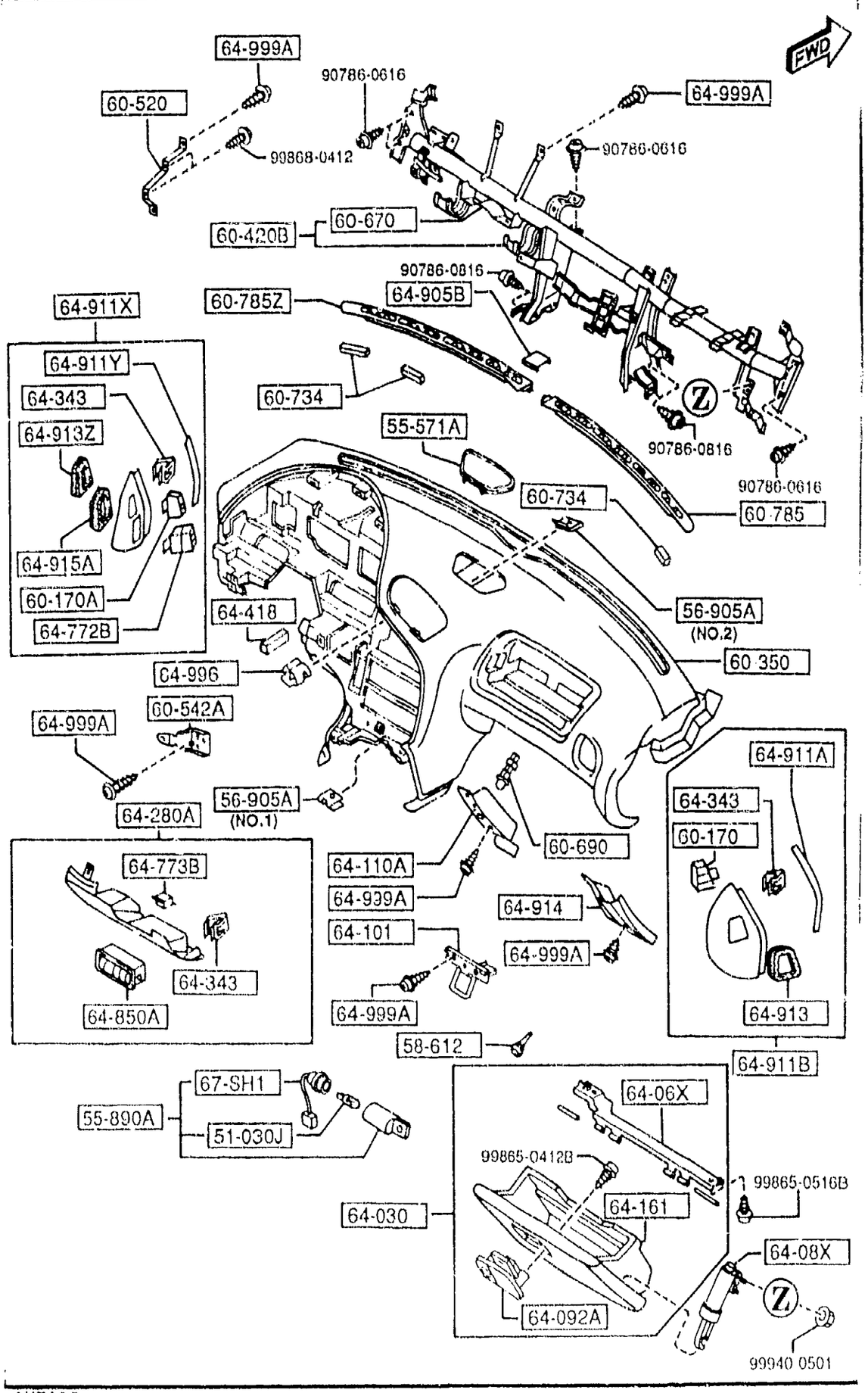

PART NO.	QTY	MODEL/RESTRICTION	MODEL/RESTRICTION	MODEL/RESTRICTION	FROM-TO
64-280A		PANEL,LOWER			
FD01-64-280C	1				
02	INT-	FE5 FE6 FE7 BLACK			
64-343		SPRING			
H260-64-343	7				
64-418		PAD			
FD01-60-737	1				
64-772B		DUCT NO.2(L)			
FD01-64-842	1				
64-773B		SPRING			
B455-64-773	2				
64-850A		LOUVER,LAP-LOWER PANEL			
FB01-64-850	1				
64-905B		COVER,HOLE-(C)			
FD01-64-905	1				
02	INT-	FE5 FE6 FE7 BLACK			
64-911A		COVER(R),SIDE			
FD01-64-981	1				
02	INT-	FE5 FE6 FE7 BLACK			
64-911B		PANEL(R),SIDE-CRASH PAD			
FD15-64-910	1				
02	INT-	FE5 FE6 FE7 BLACK			
64-911X		PANEL(L),SIDE-CRASH PAD			
FD01-64-920B	1				
02	INT-	FE5 FE6 FE7 BLACK			
64-911Y		COVER(L),SIDE			
FD01-64-971	1				
02	INT-	FE5 FE6 FE7 BLACK			

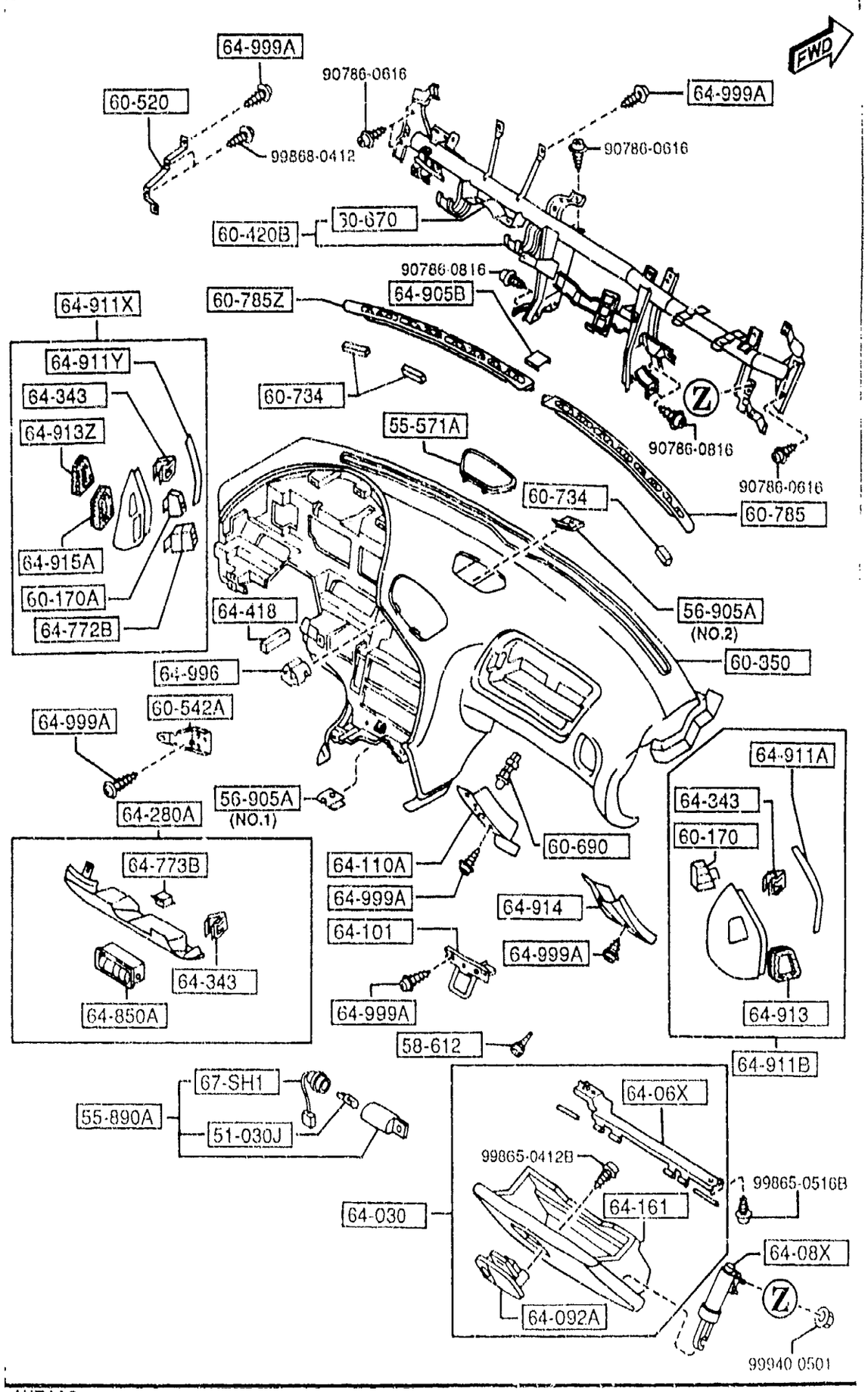

PART NO.	QTY	MODEL/RESTRICTION	MODEL/RESTRICTION	MODEL/RESTRICTION	FROM-TO
64-913		RUBBER(R),SEAL-SIDE PANEL			
FD01-64-912	1				
64-913Z		RUBBER(L),SEAL-SIDE PANEL			
FD01-64-922	1				
64-914		COVER(R),SIDE NO.2			
FD15-64-914B	1				
02	INT-	FE5 FE6 FE7 BLACK			
64-915A		RUBBER,SEAL-SIDE PANEL			
FD01-64-923	1				
64-996		NUT,EXPANSION			
GJ21-64-996	2				
64-999A		SCREW,TAPPING			
W201-64-999	22				
67-SH1		CORD,SHORT			
FD17-67-SH0	1				

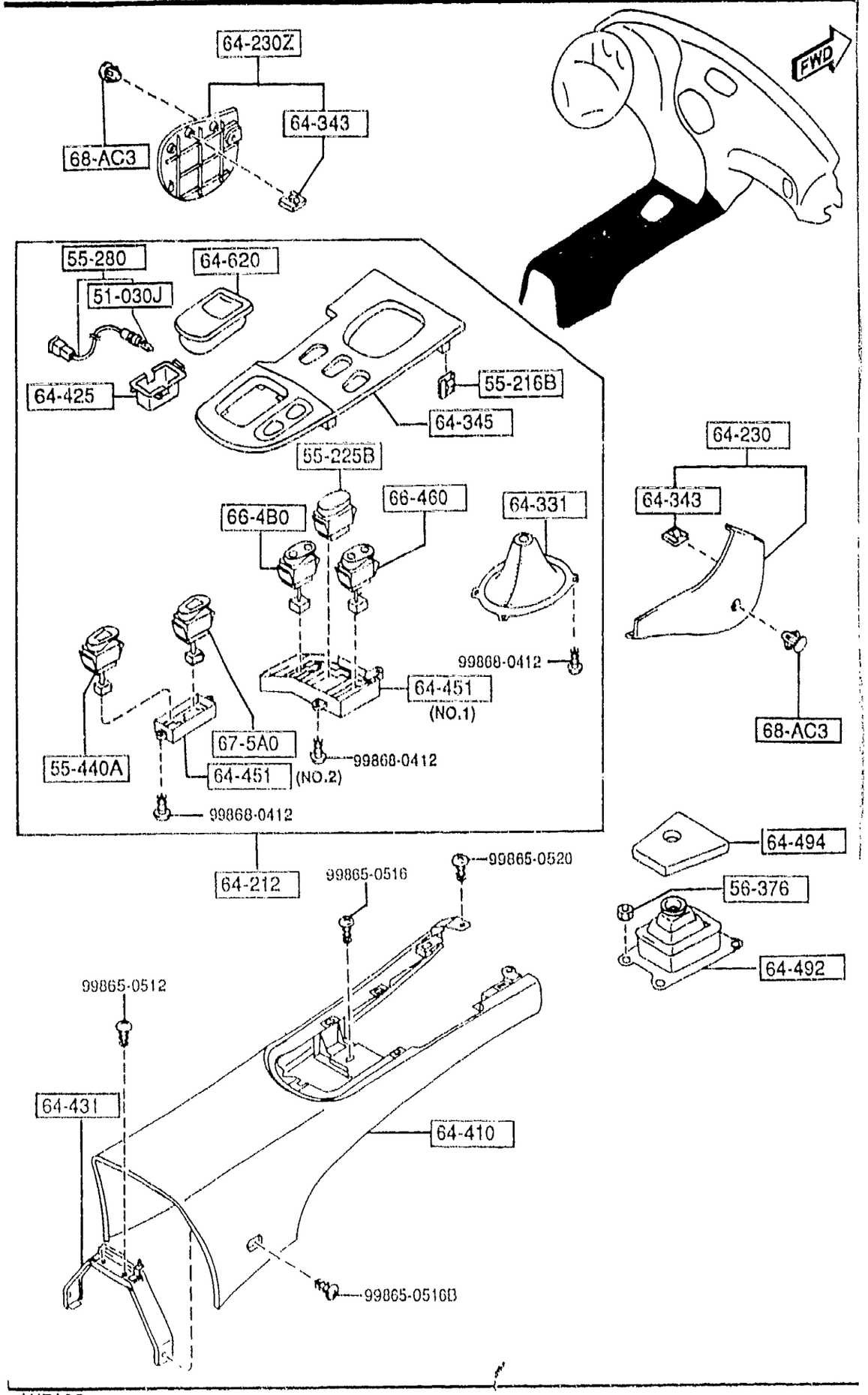

AUFA06

5570 -1 CONSOLE

PART NO.	QTY	MODEL/RESTRICTION	MODEL/RESTRICTION	MODEL/RESTRICTION	FROM-TO
51-030J		BULB			
3625-75-139	1	12V 1.4W			
55-216B		SPRING,CENTER PANEL			
B092-55-257	5				
55-225B		COVER,HOLE			
FD01-55-225A	1	(W/O HEAD LAMP CLEANER) (W/STEEL SUN ROOF) (W/GLASS SUN ROOF)			
00	INT-	FE5 FE6 FE7 BLACK			
FD01-55-225A	2	(W/O HEAD LAMP CLEANER) (W/O SUN ROOF)			
00	INT-	FE5 FE6 FE7 BLACK			
55-280		BULB & SOCKET			
FD01-55-280	1				
55-440A		WARNING,HEAT			
FD01-67-5H0C	1				
56-376		NUT,SELF LOCK			
B001-56-376	4	(MT)			
64-212		PANEL,CONSOLE			
FD15-64-470	1	(W/O HEAD LAMP CLEANER) ((MT)>(W/O SUN ROOF))			
00	INT-	FE5 FE6 FE7 BLACK			
FD17-64-470	1	(W/O HEAD LAMP CLEANER) ((AT)>(W/O SUN ROOF))			
00	INT-	FE5 FE6 FE7 BLACK			
FD18-64-470	1	(W/O HEAD LAMP CLEANER) ((MT)>(W/STEEL SUN ROOF)) ((MT)>(W/GLASS SUN ROOF))			
00	INT-	FE5 FE6 FE7 BLACK			
FD19-64-470	1	(W/O HEAD LAMP CLEAN			

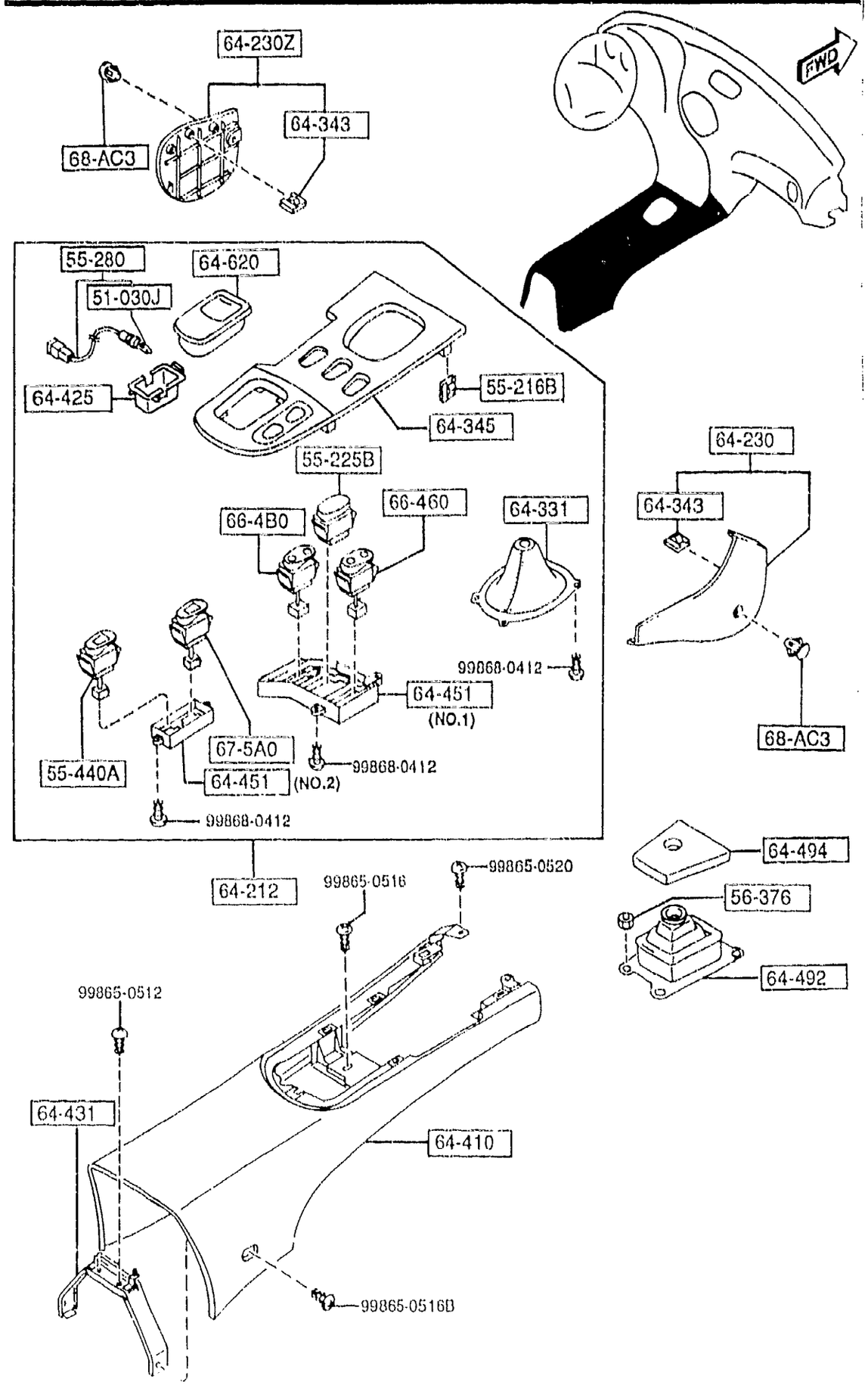

PART NO.	QTY	MODEL/RESTRICTION	MODEL/RESTRICTION	MODEL/RESTRICTION	FROM-TO
CONT'D		ER) ((AT)>(W/GLASS SUN ROOF))			
00 INT-		FE5 FE6 FE7 BLACK			
+---------+ | 64-230 | +---------+		WALL(R),SIDE			
FD15-64-220A	1				
02 INT-		FE5 FE6 FE7 BLACK			
+---------+ | 64-230Z | +---------+		WALL(L),SIDE			
FD01-64-240A	1				
02 INT-		FE5 FE6 FE7 BLACK			
+---------+ | 64-331 | +---------+		BOOT,CHANGE			
FD01-64-330C	1	(MT)			
00 INT-		FE5 FE6 FE7 BLACK			
+---------+ | 64-343 | +---------+		SPRING			
H260-64-343	3				
+---------+ | 64-345 | +---------+		PANEL,SWITCH			
FD15-64-471	1	(MT)			
FD17-64-471	1	(AT)			
+---------+ | 64-410 | +---------+		CONSOLE,REAR			
FD01-64-420E	1				
02 INT-		FE5 FE6 FE7 BLACK			
+---------+ | 64-425 | +---------+		CASE,LAMP			
FD01-64-414A	1				
+---------+ | 64-431 | +---------+		BRACKET,RR.CONSOLE-NO.1			
FD15-64-43XA	1				
+---------+ | 64-451 | +---------+		PANEL,SWITCH			
FD01-66-468	1	(ILLUST. NO.1)			
FD02-66-468	1	(ILLUST. NO.2)			
+---------+ | 64-492 | +---------+		INSULATOR,BOOT			
FD01-64-490A	1	(MT)			

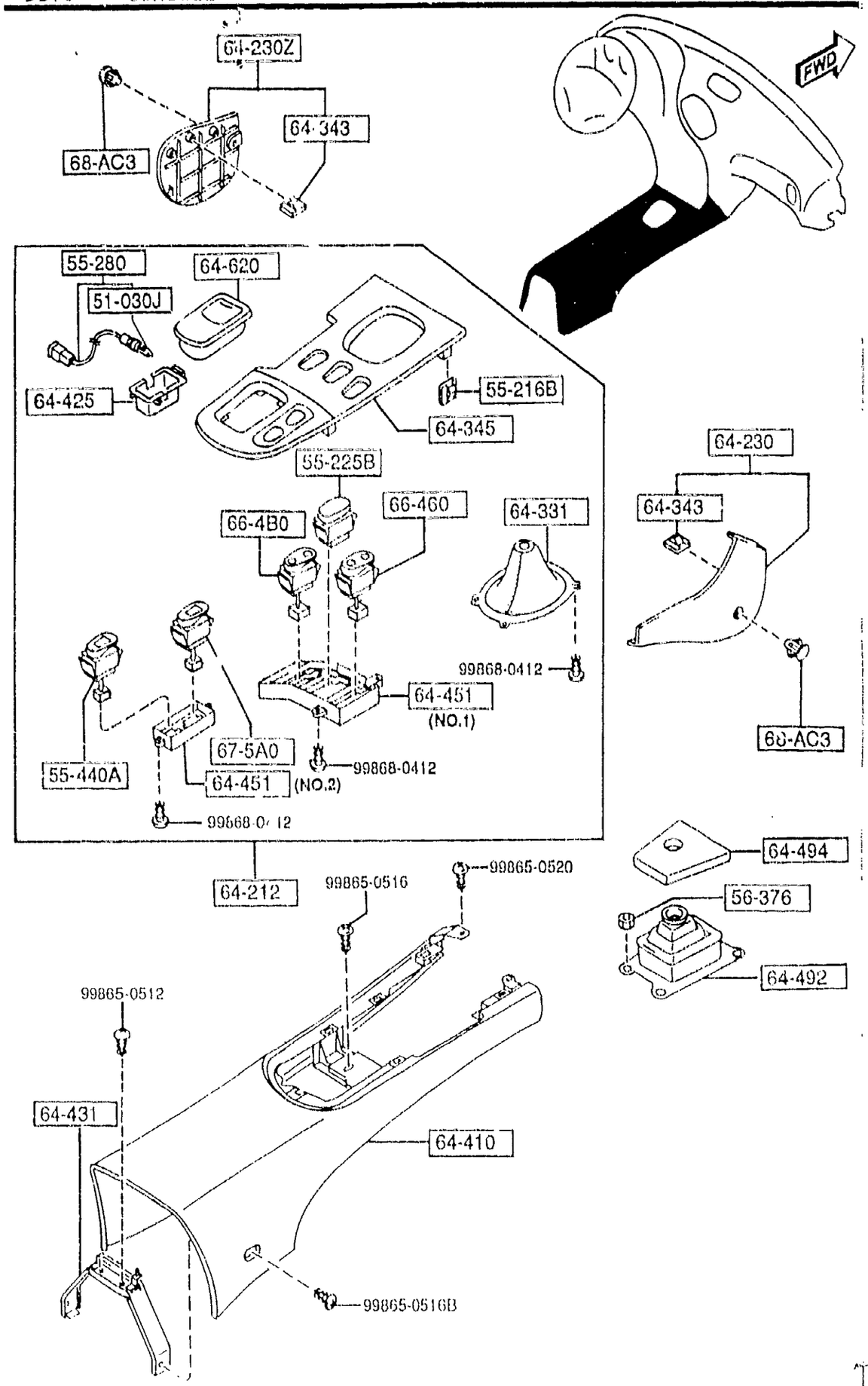

PART NO.	QTY	MODEL/RESTRICTION	MODEL/RESTRICTION	MODEL/RESTRICTION	FROM-TO
64-494		PAD,CHANGE BOOT			
FB01-64-495	1	(MT)			
64-620		TRAY,ASH			
FD01-64-610A	1				
00	INT-	FE5 FE6 FE7 BLACK			
66-4B0		SWITCH,FOG-FRONT			
FD01-66-4B0A	1	(W/O HEAD LAMP CLEANER) (W/STEEL SUN ROOF) (W/GLASS SUN ROOF)			
66-460		SWITCH,RR.DEF.			
FD01-66-460A	1				
67-5A0		DISPLAY,SECURITY-ALARM			
FD01-67-5A0C	1				
68-AC3		FASTENER			
B467-68-AC3	2				
02	INT-	FE5 FE6 FE7 BLACK			

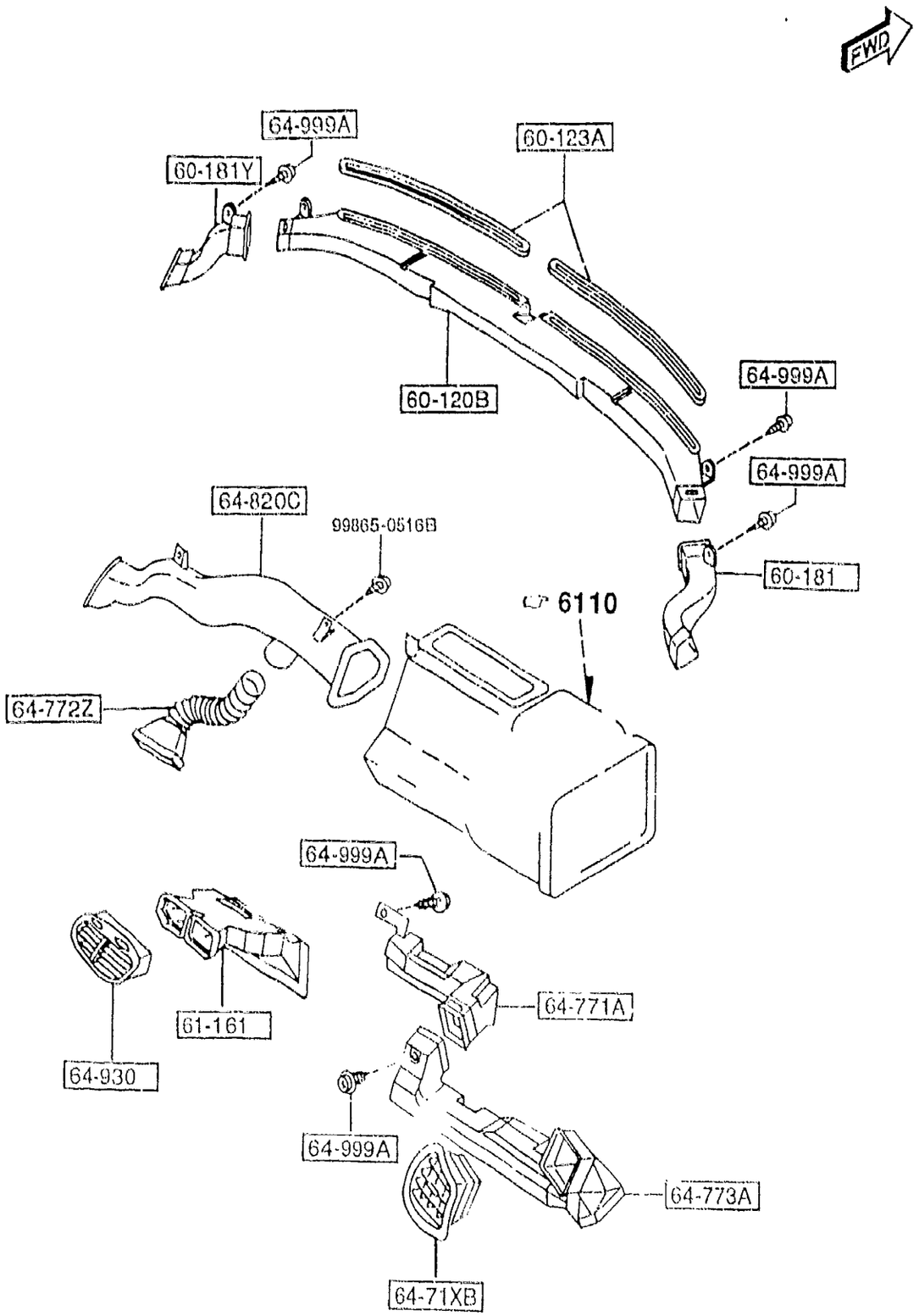

PART NO.	QTY	MODEL/RESTRICTION	MODEL/RESTRICTION	MODEL/RESTRICTION	FROM-TO
60-120B		NOZZLE,DEFROSTER			
FD01-60-120	1				
60-123A		TAPE,SOFT-DEF.NOZZLE			
FD01-60-123	2				
60-181		HOSE,SIDE-DEMISTER			
FD01-60-181	1				
60-181Y		DUCT(L),SIDE DEMIST.			
FD01-60-191	1				
61-161		DUC , CENTER			
FD01-61-160B	1				
64-71XB		LOUVER(R),VENT.GRILL E			
FD15-64-81XA	1				
02	INT-	FE5 FE6 FE7 BLACK			
64-771		DUCT NO.1(R)			
FD15-64-741	1				
64-772Z		DUCT(L),LAP			
FD01-64-772B	1				
64-773A		DUCT NO.3(R)			
FD15-64-743B	1				
64-820C		DUCT(L),VENTILATOR			
FD01-64-84XA	1				
64-930		GRILLE(C),VENTILATOR			
FD01-64-930A	1				
02	INT-	FE5 FE6 FE7 BLACK			
64-999A		SCREW,TAPPING			
W201-64-999	6				

SEAT TYPES / GRADE / SPECIFICATIONS	STA TYPE	STC TYPE	STD TYPE
	BASE	R3, R2	OPT-PKG, TOURING
SEAT TRIM	CLOTH "A"  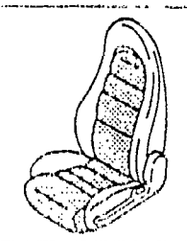	CLOTH "C"  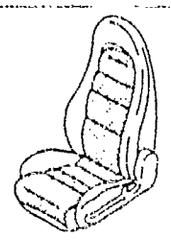	LEATHER  

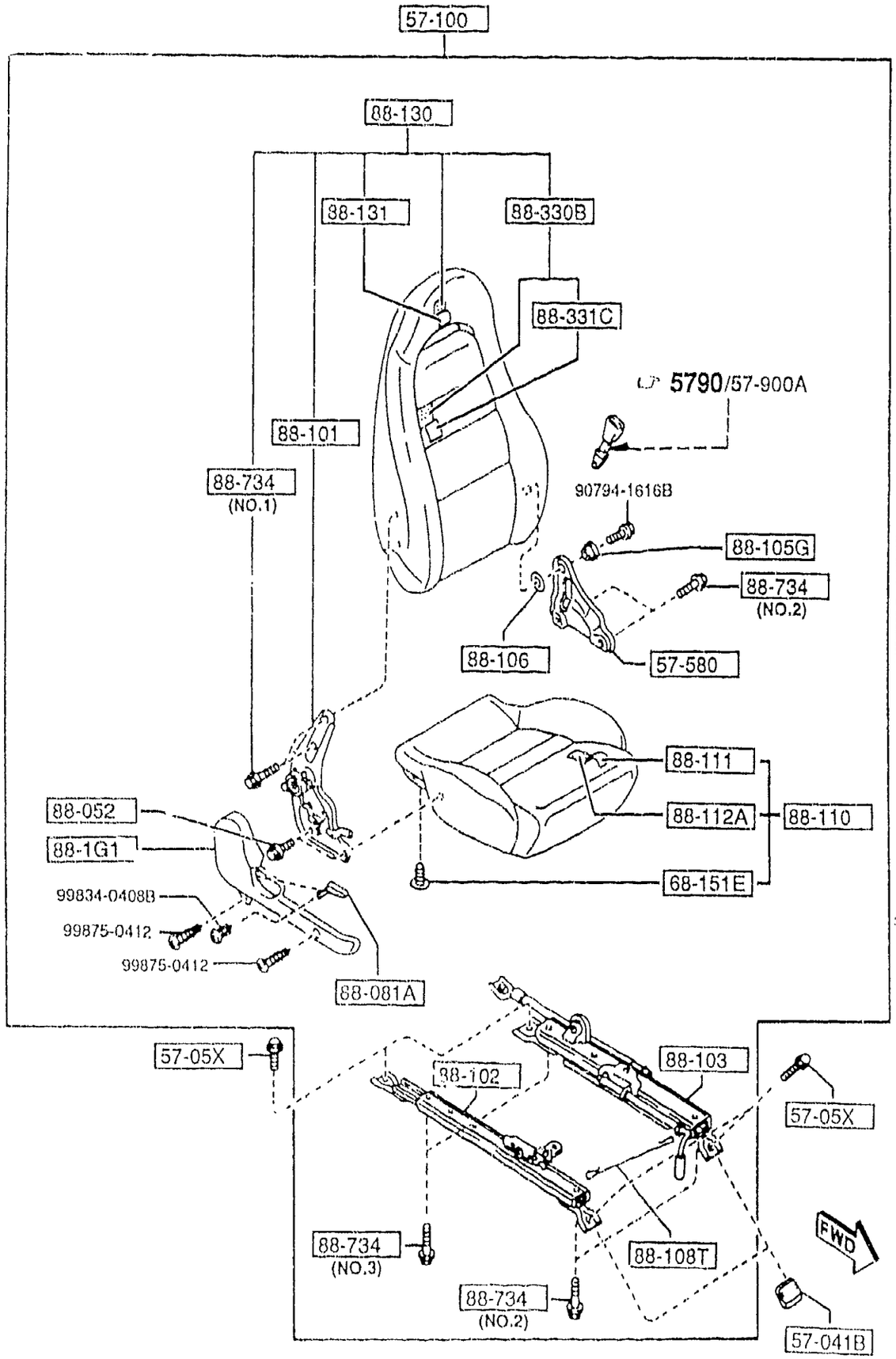

AUFA06

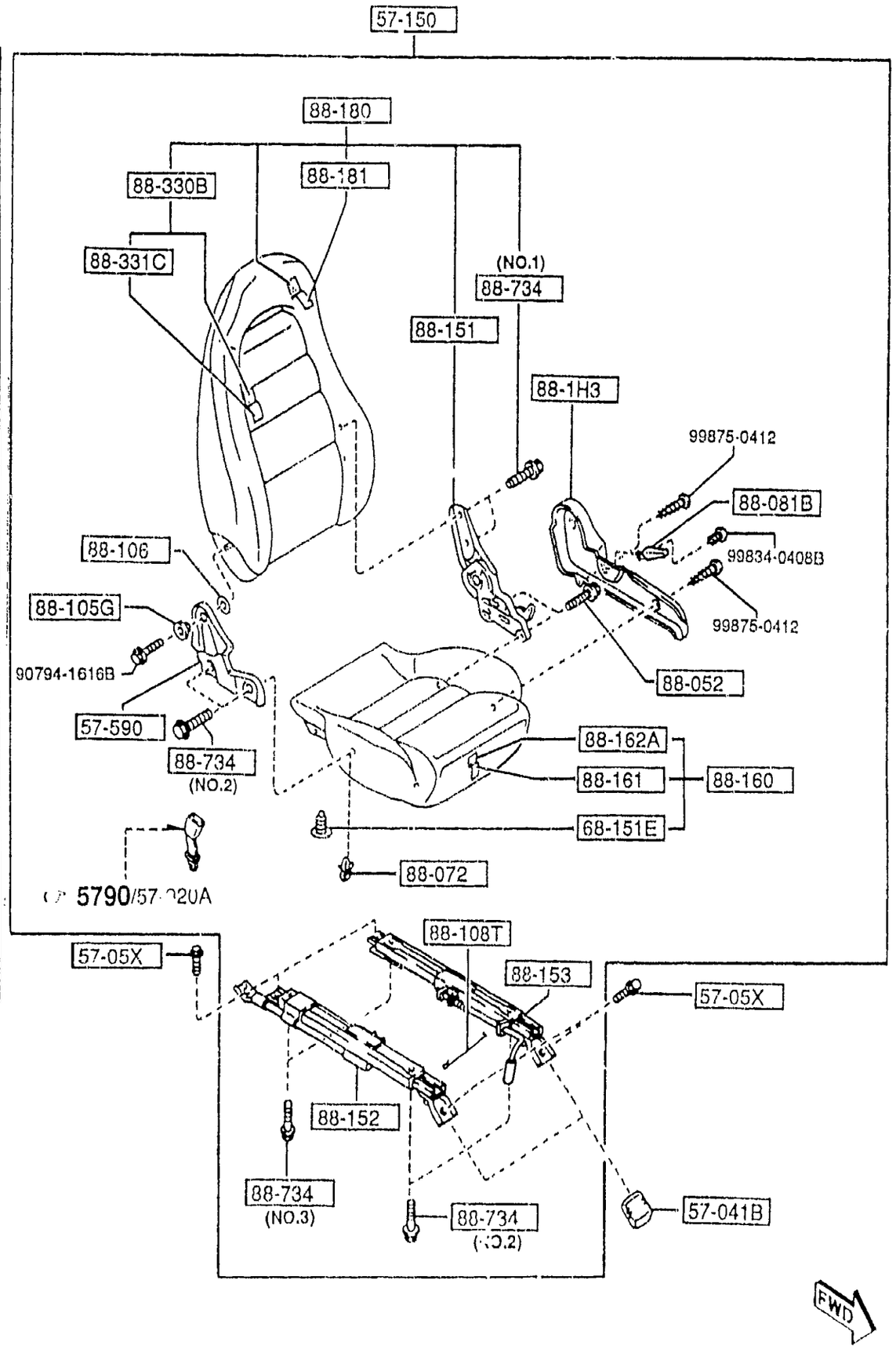

AUFA06

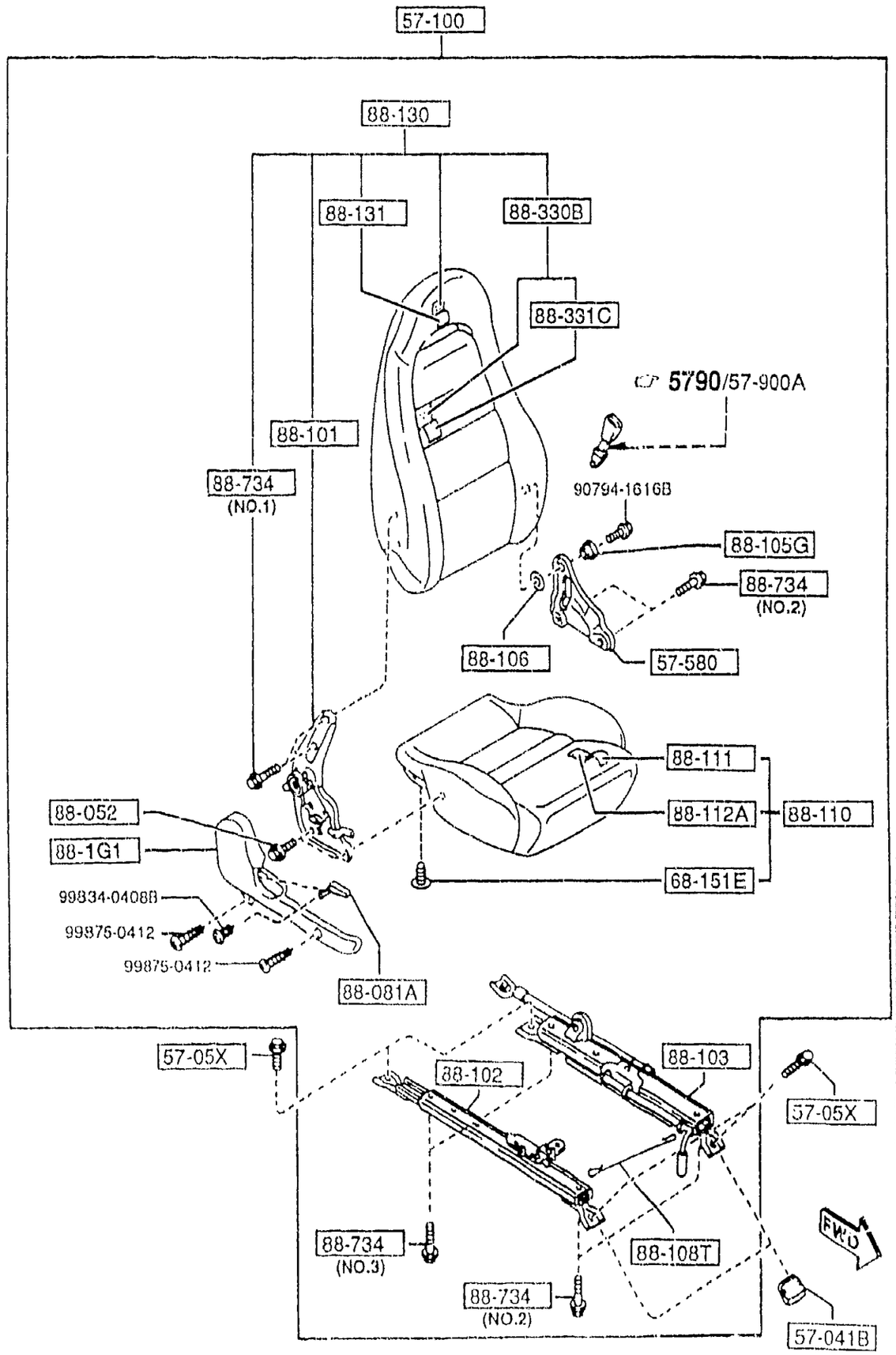

PART NO.	QTY	MODF'./RESTRICTION	MODEL/RESTRICTION	MODEL/RESTRICTION	FROM-TO
57-041B		COVER NO.1,ADJ-FRT			
J001-57-041	4				
02	INT-	FE5 BLACK			
17	INT-	FE7 RED			
33	INT-	FE6 TAN			
57-05X		BOLT,LINK			
B455-57-05XA	8				
57-100		SEAT(R),FRONT			
FD19-57-100A	1	R2, R3, (STC TYPE)			-4B01
02	INT-	FE5 BLACK			
FD15-57-100A	1	BASE, (STA TYPE)			-5301
02	INT-	FE5 BLACK			
FD18-57-100	1	OPT-PKG, TOURING, (STD TYPE)			-5301
02	INT-	FE5 BLACK			
18	INT-	FE7 RED			
34	INT-	FE6 TAN			
FD19-57-100B	1	R2, R3, (STC TYPE)			4B01-5301
02	INT-	FE5 BLACK			
FD15-57-100C	1	BASE, (STA TYPE)			5301-
02	INT-	FE5 BLACK			
FD18-57-100B	1	OPT-PKG, TOURING, (STD TYPE)			5301-
02	INT-	FE5 BLACK			
18	INT-	FE7 RED			
34	INT-	FE6 TAN			
FD19-57-100D	1	R2, R3, (STC TYPE)			5301-
02	INT-	FE5 BLACK			
57-150		SEAT(L),FRONT			
FD03-57-150D	1	R2, R3, (STC TYPE)			-4B01
02	INT-	FE5 BLACK			

4B01 FD333 -400022
5301 FD333 -400027

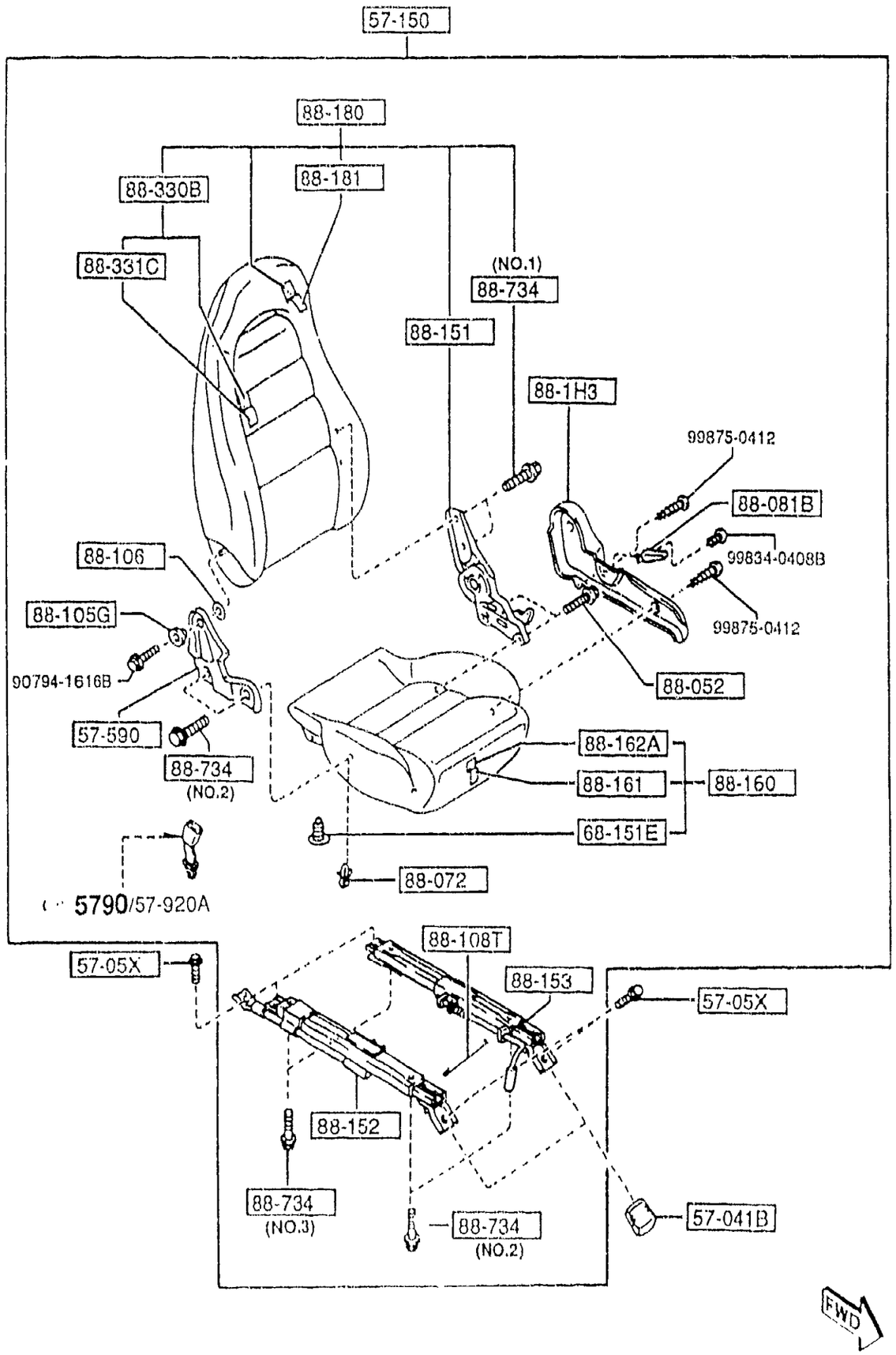

PART NO.	QTY	MODEL/RESTRICTION	MODEL/RESTRICTION	MODEL/RESTRICTION	FROM-TO
CONT'D					
FD01-57-150D	1	BASE, (STA TYPE)			-5301
02	INT-	FE5 BLACK			
FD05-57-150D	1	OPT-PKG, TOURING, (STD TYPE)			-5301
02	INT-	FE5 BLACK			
18	INT-	FE7 RED			
34	INT-	FE6 TAN			
FD03-57-150E	1	R2, R3, (STC TYPE)			4B01-5301
02	INT-	FE5 BLACK			
FD01-57-150F	1	BASE, (STA TYPE)			5301-
02	INT-	FE5 BLACK			
FD03-57-150G	1	R2, R3, (STC TYPE)			5301-
02	INT-	FE5 BLACK			
FD05-57-150F	1	OPT-PKG, TOURING, (STD TYPE)			5301-
02	INT-	FE5 BLACK			
18	INT-	FE7 RED			
34	INT-	FE6 TAN			
57-580		BRACKET(R),FRT SEAT			
FD01-88-124	1				
57-590		BRACKET(L),FRT SEAT			
FD01-88-174	1				
68-151E		CLIP			
B102-68-865	10				
00	INT-	FE5 FE6 FE7 BLACK			
88-052		BOLT			
FD01-88-062	4				
88-072		CLIP			
FD01-88-072	2				
88-081A		KNOB(R),KNUCKLE			

4B01 FD333 -4000022
5301 FD333 -4000027

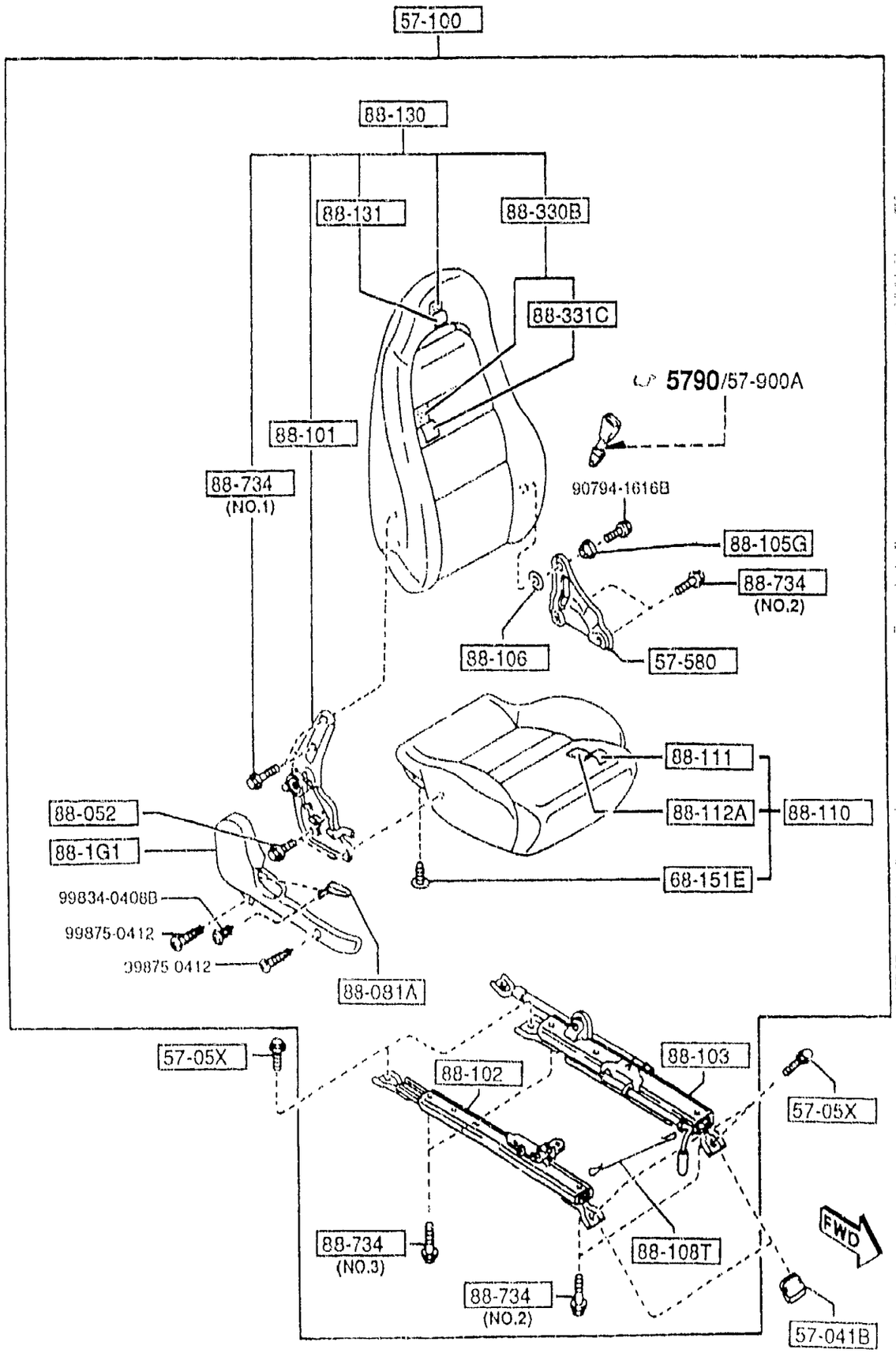

PART NO.	QTY	MODEL/RESTRICTION	MODEL/RESTRICTION	MODEL/RESTRICTION	FROM-TO
CONT'D					
FD01-88-1G5	1				
02	INT-	FE5 BLACK			
17	INT-	FE7 RED			
33	INT-	FE6 TAN			
+---------+					
| 88-081B |		KNOB(L),KNUCKLE			
+---------+					
FD01-88-1H5	1				
02	INT-	FE5 BLACK			
17	INT-	FE7 RED			
33	INT-	FE6 TAN			
+---------+					
| 88-1G1 |		COVER NO.1,SIDE-F.SEAT			
+---------+					
FD01-88-1G1	1				
02	INT-	FE5 BLACK			
17	INT-	FE7 RED			
33	INT-	FE6 TAN			
+---------+					
| 88-1H3 |		COVER NO.4,SIDE-F.SEAT			
+---------+					
FD01-88-1H3	1				
02	INT-	FE5 BLACK			
17	INT-	FE7 RED			
.3	INT-	FE6 TAN			
+---------+					
| 88-101 |		KNUCKLE(R),RECLINING			
+---------+					
FD01-88-101	1				
+---------+					
| 88-102 |		ADJUSTER,NO.1			
+---------+					
FD01-88-102	1				
+---------+					
| 88-103 |		ADJUSTER,NO.2			
+---------+					
FD11-88-103	1				
+---------+					
| 88-105G |		BUSH,HINGE			
+---------+					
FD01-88-005	2				
+---------+					
| 88-106 |		WASHER			
+---------+					
FD01-88-006	2				

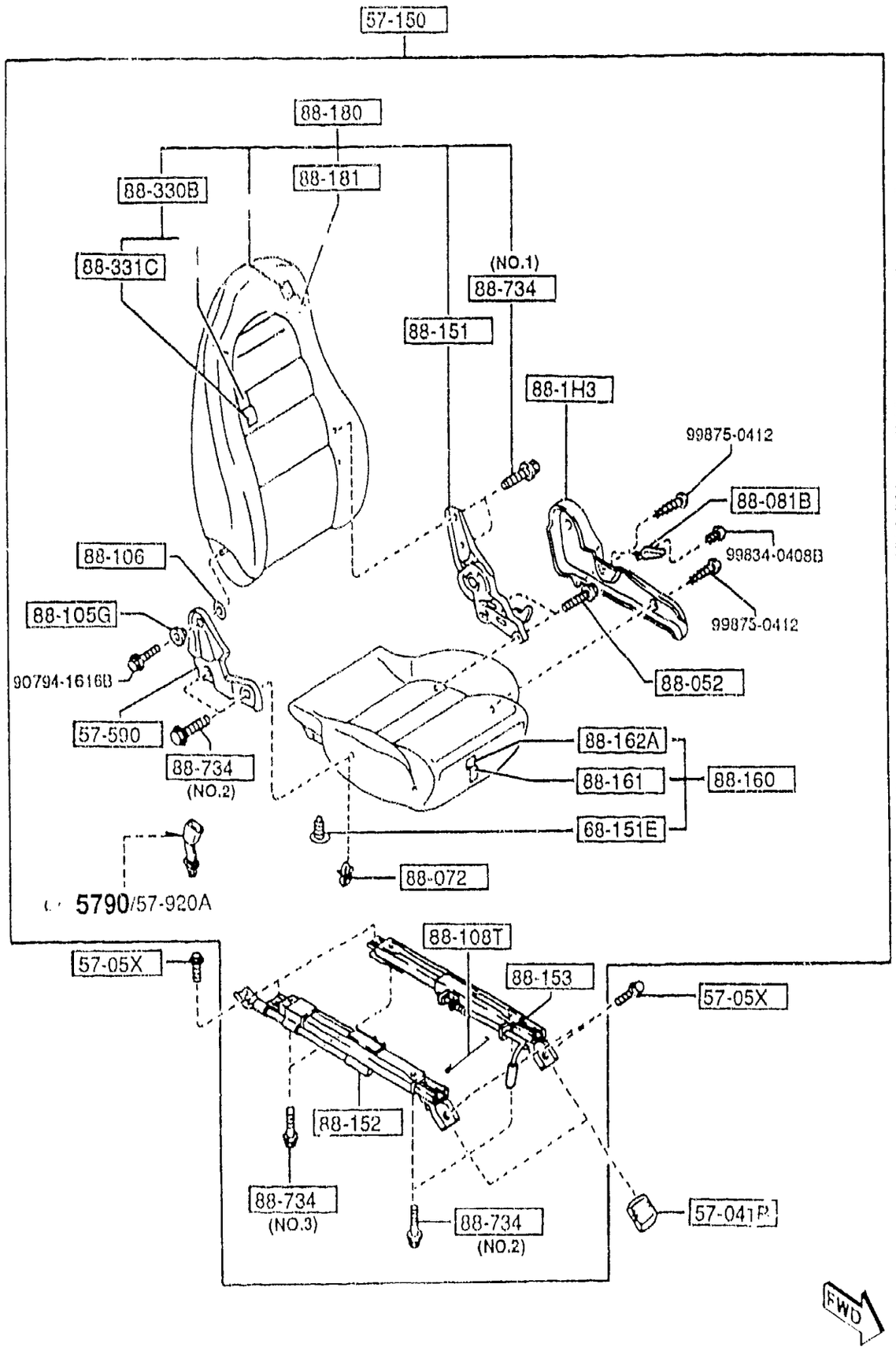

PART NO.	QTY	MODEL/RESTRICTION	MODEL/RESTRICTION	MODEL/RESTRICTION	FROM-TO
88-108T		WIRE,RELEASE			
FD01-88-106	2				
88-110		CUSHION(R),FRT SEAT			
F110-88-110	1	R2, R3, (STC TYPE)			-4B01
02	INT-	FE5 BLACK			
FD15-88-110	1	BASE, (STA TYPE)			-5301
02	INT-	FE5 BLACK			
FD18-88-110	1	OPT-PKG, TOURING, (STD TYPE)			-5301
02	INT-	FE5 BLACK			
18	INT-	FE7 RED			
34	INT-	FE6 TAN			
F110-88-110A	1	R2, R3, (STC TYPE)			4B01-5301
02	INT-	FE5 BLACK			
FD15-88-110A	1	BASE, (STA TYPE)			5301-
02	INT-	FE5 BLACK			
FD18-88-110A	1	OPT-PKG, TOURING, (STD TYPE)			5301-
02	INT-	FE5 BLACK			
18	INT-	FE7 RED			
34	INT-	FE6 TAN			
F110-88-110B	1	R2, R3, (STC TYPE)			5301-
02	INT-	FE5 BLACK			
88-111		TRIM(R),SEAT CUSHION			
FD03-88-111	1	R2, R3, (STC TYPE)			-4B01
02	INT-	FE5 BLACK			
FD01-88-111	1	BASE, (STA TYPE)			-5301
02	INT-	FE5 BLACK			
FD05-88-111	1	OPT-PKG, TOURING, (STD TYPE)			-5301
02	INT-	FE5 BLACK			

4B01 FD333 -400022
5301 FD333 -400027

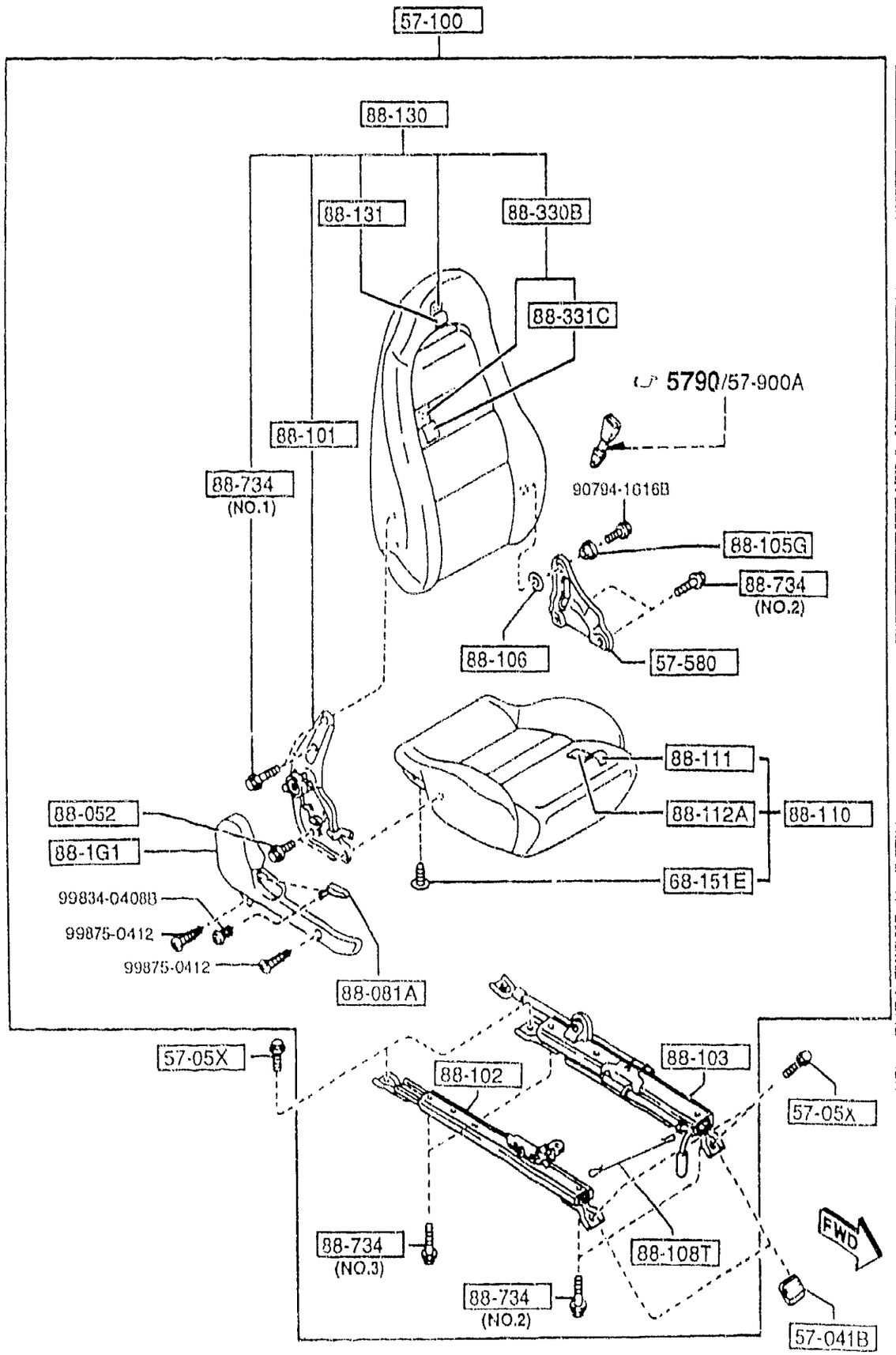

PART NO.	QTY	MODEL/RESTRICTION	MODEL/RESTRICTION	MODEL/RESTRICTION	FROM-TO
CONT'D					
18	INT-	FE7 RED			
34	INT-	FE6 TAN			
FD03-88-111A	1	R2, R3, (STC TYPE)			4B01-5301
02	INT-	FE5 BLACK			
FD01-88-111A	1	BASE, (STA TYPE)			5301-
02		BLACK			
FD03-88-111B	1	R2, R3, (STC TYPE)			5301-
02	INT-	FE5 BLACK			
FD05-88-111A	1	OPT-PKG, TOURING, (STD TYPE)			5301-
02	INT-	FE5 BLACK			
18	INT-	FE7 RED			
34	INT-	FE6 TAN			
+88-112A+		PAD(R),CUSHION-FRT			
FD15-88-112	1				
+88-130+		BACK(R),FRONT SEAT			
FD19-88-130A	1	R2, R3, (STC TYPE)			-4B01
02	INT-	FE5 BLACK			
FD15-88-130A	1	BASE, (STA TYPE)			-5301
02	INT-	FE5 BLACK			
FD18-88-130	1	OPT-PKG, TOURING, (STD TYPE)			-5301
02	INT-	FE5 BLACK			
18	INT-	FE7 RED			
34	INT-	FE6 TAN			
FD19-88-130B	1	R2, R3, (STC TYPE)			4B01-5301
02	INT-	FE5 BLACK			
FD15-88-130C	1	BASE, (STA TYPE)			5301-
02	INT-	FE5 BLACK			
FD18-88-130B	1	OPT-PKG, TOURING, (STD TYPE)			5301-

4B01 FD333 -400022
5301 FD333 -400027

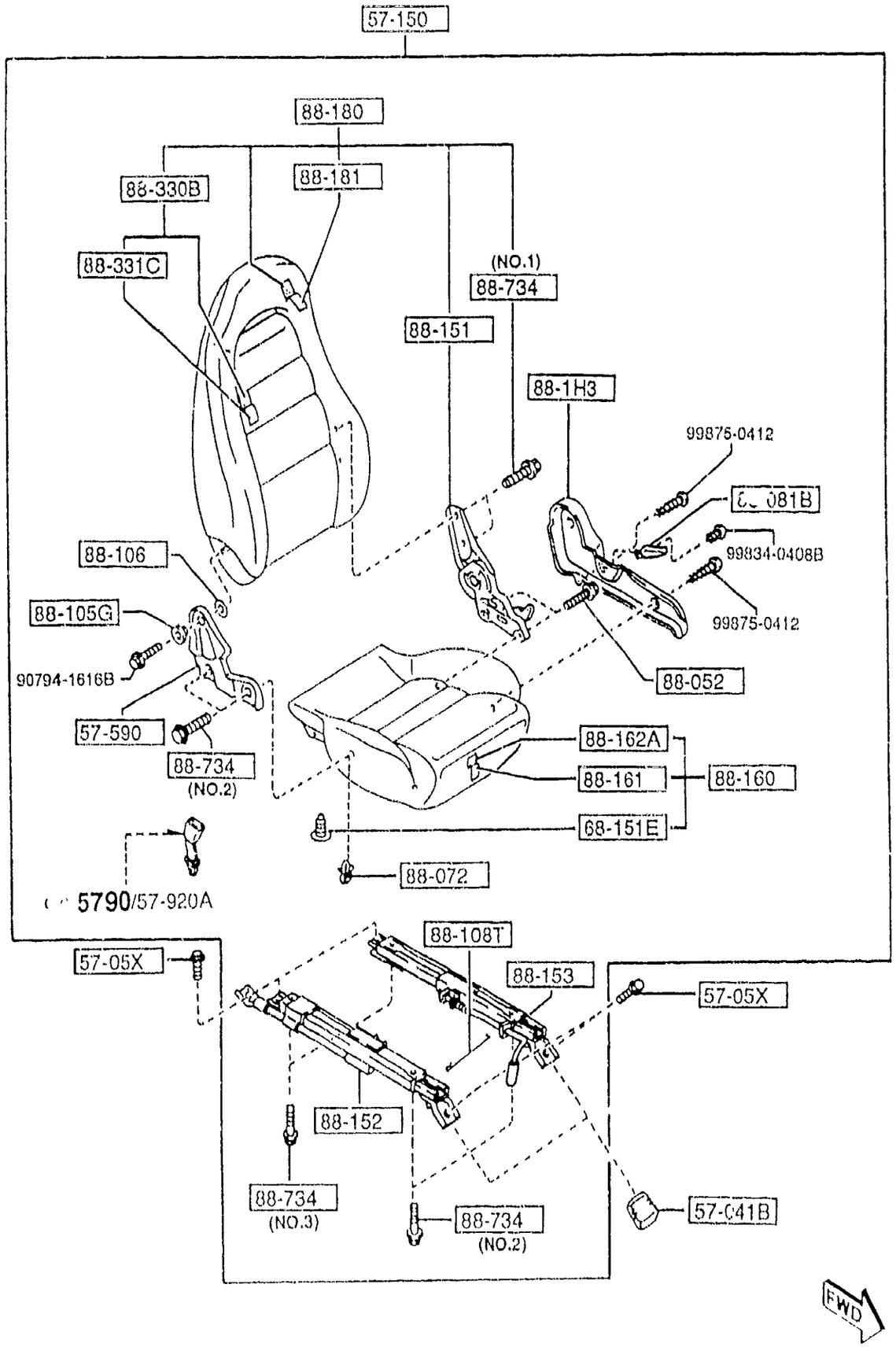

PART NO.	QTY	MODEL/RESTRICTION	MODEL/RESTRICTION	MODEL/RESTRICTION	FROM-TO
CONT'D					
02	INT-	FE5 BLACK			
18	INT-	FE7 RED			
34	INT-	FE6 TAN			
FD19-88-130D	1	R2, R3, (STC TYPE)			5301-
02	INT-	FE5 BLACK			
88-131		TRIM(R),SEAT BACK			
FD15-88-131	1	BASE, (STA TYPE)			-5301
02	INT-	FE5 BLACK			
FD18-88-131	1	OPT-PKG, TOURING, (STD TYPE)			-5301
02	INT-	FE5 BLACK			
18	INT-	FE7 RED			
34	INT-	FE6 TAN			
FD19-88-131	1	R2, R3, (STC TYPE)			-5301
02	INT-	FE5 BLACK			
FD15-88-131A	1	BASE, (STA TYPE)			5301-
02	INT-	FE5 BLACK			
FD18-88-131A	1	OPT-PKG, TOURING, (STD TYPE)			5301-
02	INT-	FE5 BLACK			
18	INT-	FE7 RED			
34	INT-	FE6 TAN			
FD19-88-131A	1	R2, R3, (STC TYPE)			5301-
02	INT-	FE5 BLACK			
88-151		KNUCKLE(L),RECLINING			
FD01-88-155	1				
88-152		ADJUSTER NO.3			
FD01-88-152	1				
88-153		ADJUSTER NO.4			
FD01-88-153	1				

5301 FD333 -400027

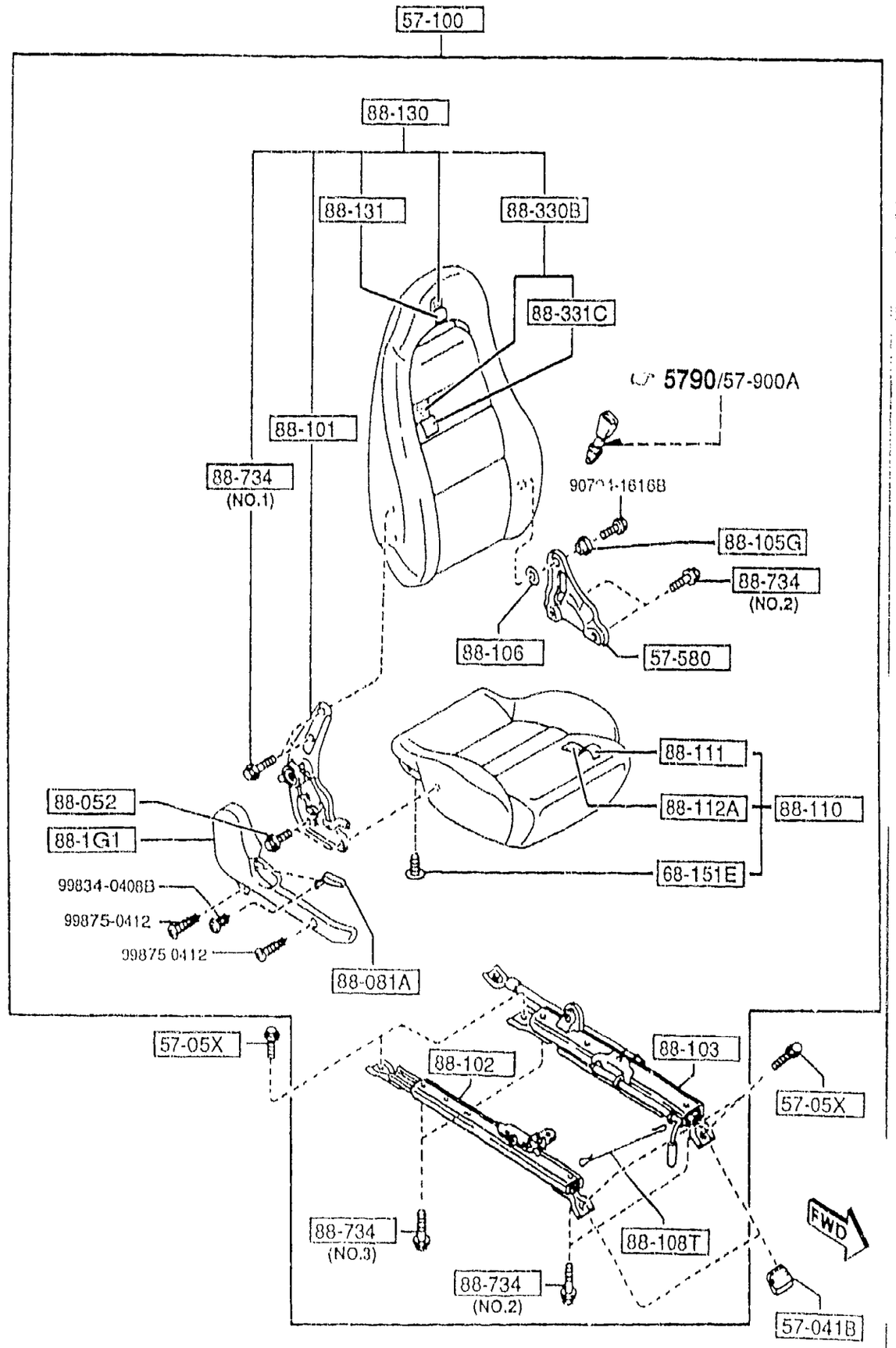

PART NO.	QTY	MODEL/RESTRICTION	MODEL/RESTRICTION	MODEL/RESTRICTION	FROM-TO
88-160		CUSHION(L),FRT SEAT			
FD03-88-160	1	R2, R3, (STC TYPE)			-4B01
02	INT-	FE5 BLACK			
FD01-88-160	1	BASE, (STA TYPE)			-5301
02	INT-	FE5 BLACK			
FD05-88-160	1	OPT-PKG, TOURING, (STD TYPE)			-5301
02	INT-	FE5 BLACK			
18	INT-	FE7 RED			
34	INT-	FE6 TAN			
FD03-88-160A	1	R2, R3, (STC TYPE)			4B01-5301
02	INT-	FE5 BLACK			
FD01-88-160A	1	BASE, (STA TYPE)			5301-
02	INT-	FE5 BLACK			
FD03-88-160B	1	R2, R3, (STC TYPE)			5301-
02	INT-	FE5 BLACK			
FD05-88-160A	1	OPT-PKG, TOURING, (STD TYPE)			5301-
02	INT-	FE5 BLACK			
18	INT-	FE7 RED			
34	INT-	FE6 TAN			
88-161		TRIM(L),SEAT CUSHION			
FD03-88-161	1	R2, R3, (STC TYPE)			-4B01
02	INT-	FE5 BLACK			
FD01-88-161	1	BASE, (STA TYPE)			-5301
02	INT-	FE5 BLACK			
FD05-88-161	1	OPT-PKG, TOURING, (STD TYPE)			-5301
02	INT-	FE5 BLACK			
18	INT-	FE7 RED			
34	INT-	FE6 TAN			
FD03-88-161A	1	R2, R3,			4B01-5301

4B01 FD333 -400022
5301 FD333 -400027

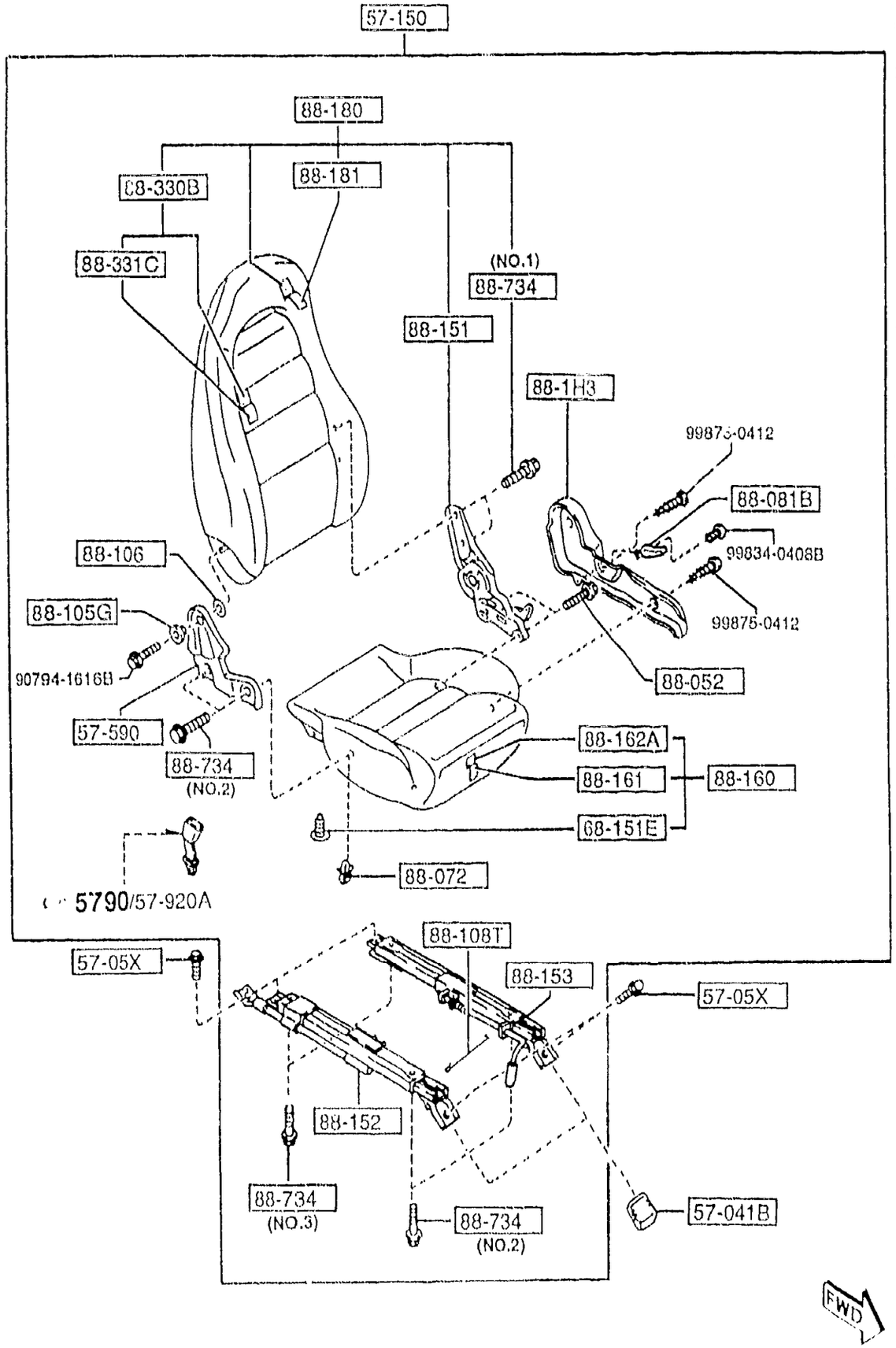

5700 -8 FRONT SEATS

PART NO.	QTY	MODEL/RESTRICTION	MODEL/RESTRICTION	MODEL/RESTRICTION	FROM-TO
CONT'D		(STC TYPE)			
02	INT-	FE5 BLACK			
FD01-88-161A	1	BASE, (STA TYPE)			5301-
02	INT-	FE5 BLACK			
FD03-88-161B	1	R2, R3, (STC TYPE)			5301-
02	INT-	FE5 BLACK			
FD05-88-161A	1	OPT-PKG, TOURING, (STD TYPE)			5301-
02	INT-	FE5 BLACK			
18	INT-	FE7 RED			
34	INT-	FE6 TAN			
+---------+ | 88-162A | +---------+ FD01-88-162	1	PAD(L),CUSHION-FRT			
+---------+ | 88-180 | +---------+ FD03-88-180A	1	BACK(L),FRONT SEAT R2, R3, (STC TYPE)			-4B01
02	INT-	FE5 BLACK			
FD01-88-180A	1	BASE, (STA TYPE)			-5301
02	INT-	FE5 BLACK			
FD05-88-180	1	OPT-PKG, TOURING, (STD TYPE)			-5301
02	INT-	FE5 BLACK			
18	INT-	FE7 RED			
34	INT-	FE6 TAN			
FD03-88-180B	1	R2, R3, (STC TYPE)			4B01-5301
02	INT-	FE5 BLACK			
FD01-88-180C	1	BASE, (STA TYPE)			5301-
02	INT-	FE5 BLACK			
FD03-88-180D	1	R2, R3, (STC TYPE)			5301-
02	INT-	FE5 BLACK			
FD05-88-180B	1	OPT-PKG, TOURING, (STD TYPE)			5301-

4B01 FD333 -400022
5301 FD333 -400027

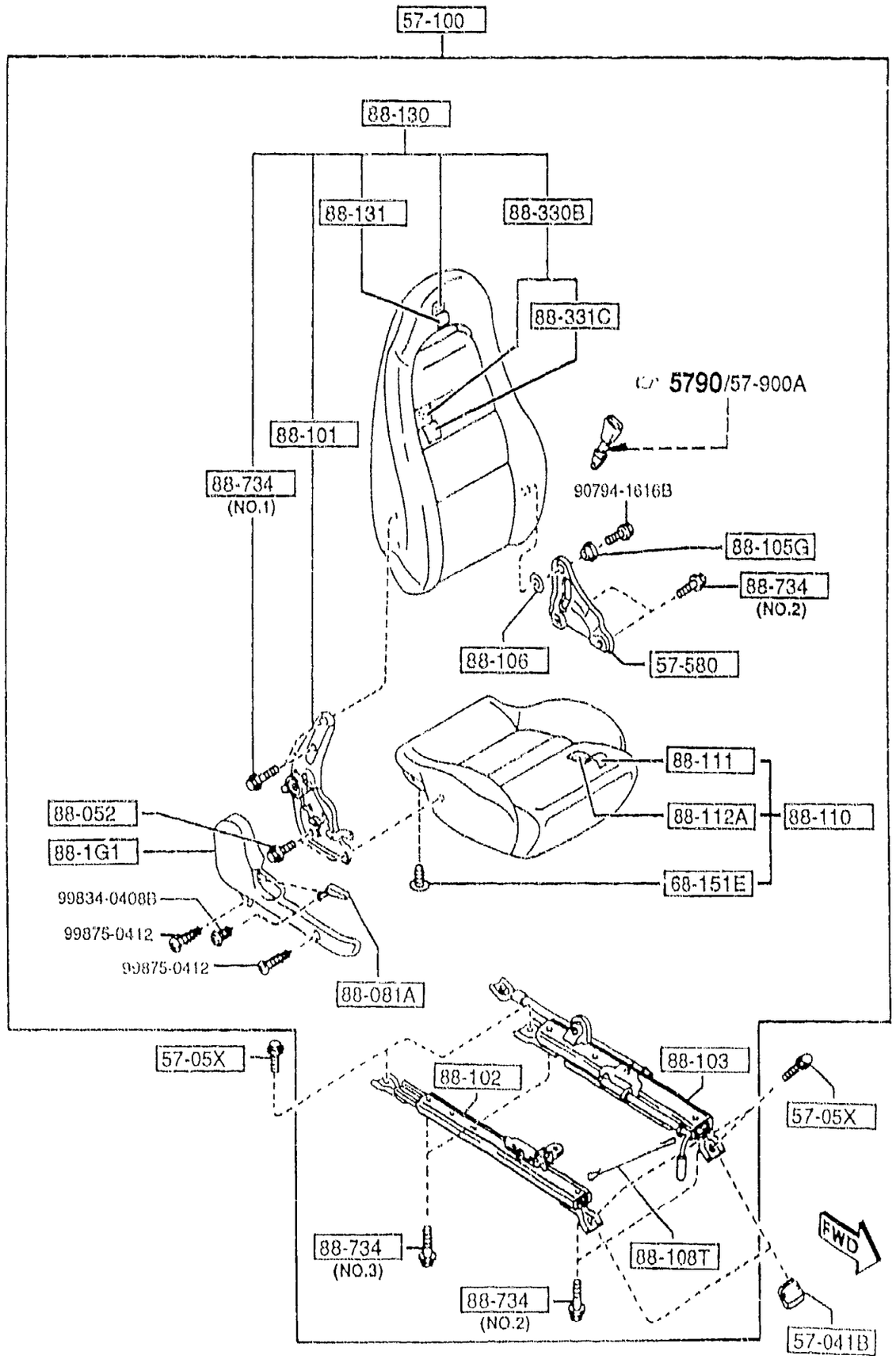

PART NO.	QTY	MODEL/RESTRICTION	MODEL/RESTRICTION	MODEL/RESTRICTION	FROM-TO
CONT'D					
02	INT-	FE5 BLACK			
18	INT-	FE7 RED			
34	INT-	FE6 TAN			
+88-181+		TRIM(L),SEAT BACK			
FD01-88-181	1	BASE, (STA TYPE)			-5301
02	INT-	FE5 BLACK			
FD03-88-181	1	R2, R3, (STC TYPE)			-5301
02	INT-	FE5 BLACK			
FD05-88-181	1	OPT-PKG, TOURING, (STD TYPE)			-5301
02	INT-	FE5 BLACK			
18	INT-	FE7 RED			
34	INT-	FE6 TAN			
FD01-88-181A	1	BASE, (STA TYPE)			5301-
02	INT-	FE5 BLACK			
FD03-88-181A	1	R2, R3, (STC TYPE)			5301-
02	INT-	FE5 BLACK			
FD05-88-181A	1	OPT-PKG, TOURING, (STD TYPE)			5301-
02	INT-	FE5 BLACK			
18	INT-	FE7 RED			
34	INT-	FE6 TAN			
+88-330B+		BACK(C),FRT SEAT			
FD03-88-6D0A	2	R2, R3, (STC TYPE)			-4B01
02	INT-	FE5 BLACK			
FD01-88-6D0A	2	BASE, (STA TYPE)			-5301
02	INT-	FE5 BLACK			
FD05-88-6D0	2	OPT-PKG, TOURING, (STD TYPE)			-5301
02	INT-	FE5 BLACK			
18	INT-	FE7 RED			
34	INT-	FE6 TAN			

4B01 FD333 -400022
5301 FD333 -400027

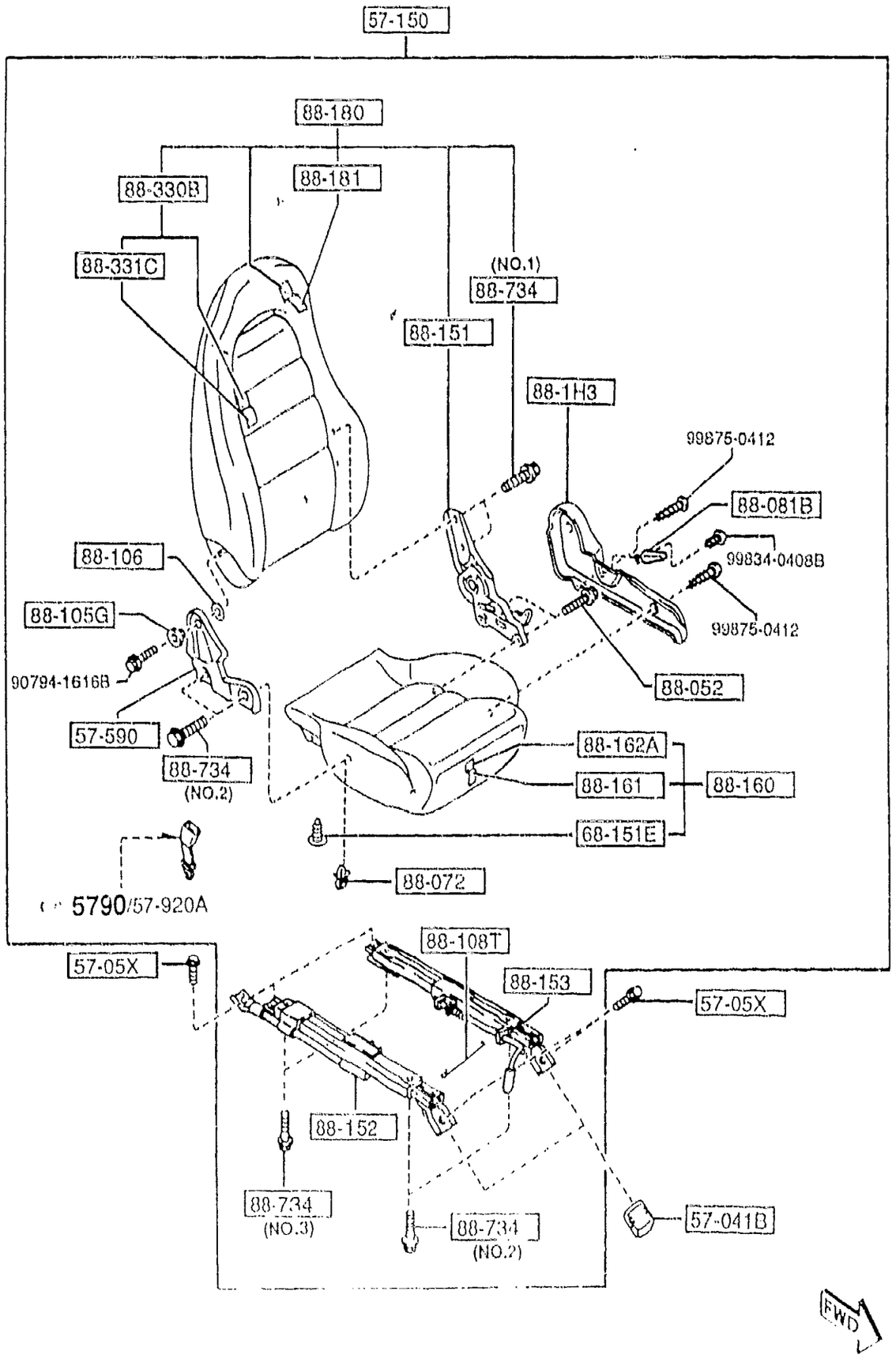

PART NO.	QTY	MODEL/RESTRICTION	MODEL/RESTRICTION	MODEL/RESTRICTION	FROM TO
CONT'D					
FD03-88-6D0B	2	R2, R3, (STC TYPE)			4B01-5301
02	INT-	FE5 BLACK			
FD01-88-6D0B	2	BASE, (STA TYPE)			5301-
02	INT-	FE5 BLACK			
FD03-88-6D0C	2	R2, R3, (STC TYPE)			5301-
02	INT-	FE5 BLACK			
FD05-88-6D0A	2	OPT-PKG, TOURING, (STD TYPE)			5301-
02	INT-	FE5 BLACK			
18	INT-	FE7 RED			
34	INT-	FE6 TAN			
88-331C		TRIM(C),FRT BACK			
FD03-88-6D2A	2	R2, R3, (STC TYPE)			-4B01
02	INT-	FE5 BLACK			
FD01-88-6D2A	2	BASE, (STA TYPE)			-5301
02	INT-	FE5 BLACK			
FD05-88-6D2	2	OPT-PKG, TOURING, (STD TYPE)			-5301
02	INT-	FE5 BLACK			
18	INT-	FE7 RED			
34	INT-	FE6 TAN			
FD03-88-6D2B	2	R2, R3, (STC TYPE)			4B01-5301
02	INT-	FE5 BLACK			
FD01-88-6D2B	2	BASE, (STA TYPE)			5301-
02	INT-	FE5 BLACK			
FD03-88-6D2C	2	R2, R3, (STC TYPE)			5301-
02	INT-	FE5 BLACK			
FD05-88-6D2A	2	OPT-PKG, TOURING, (STD TYPE)			5301-
02	INT-	FE5 BLACK			
18	INT-	FE7 RED			

4B01 FD333 -400022
5301 FD333 -400027

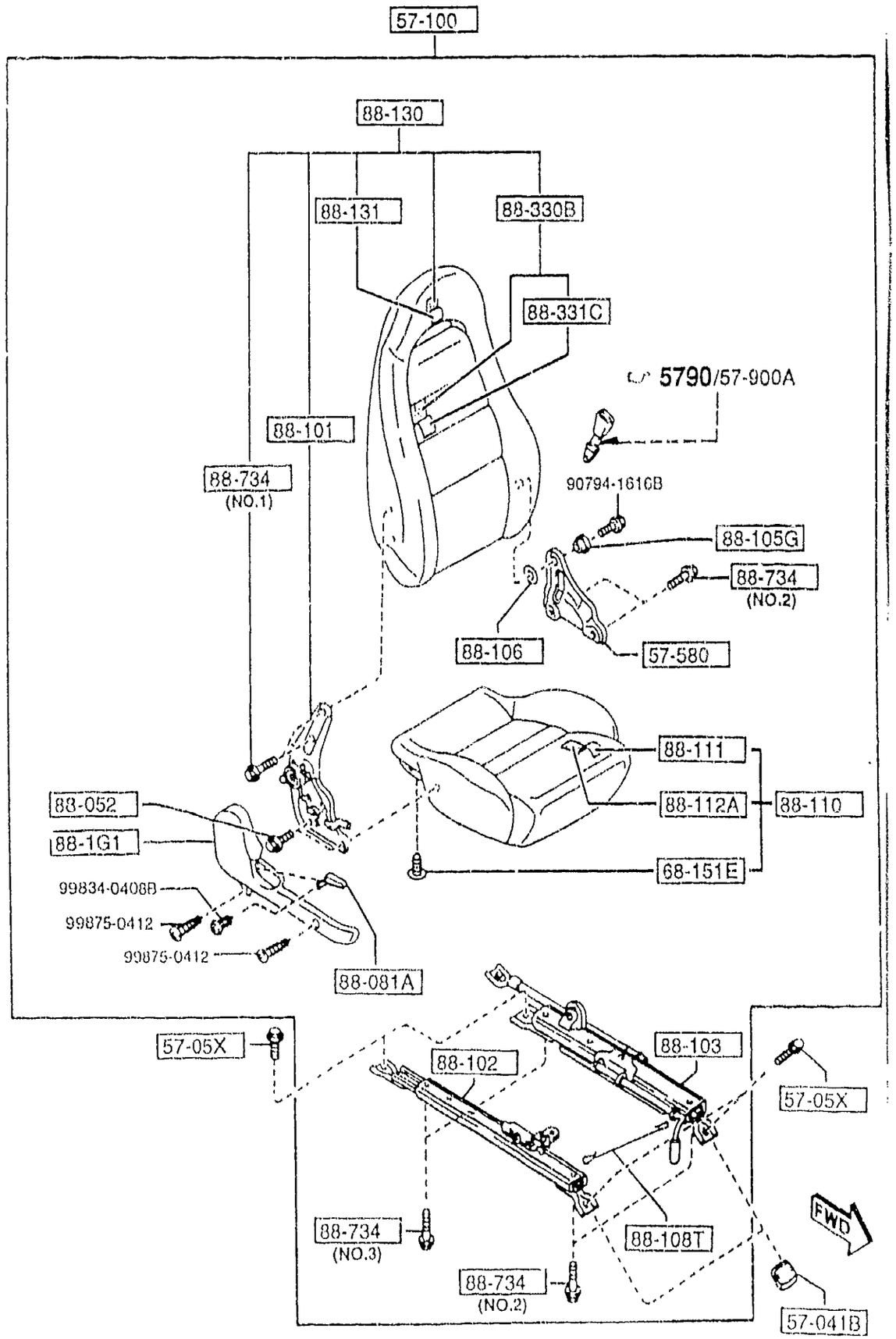

5700 -11* FRONT SEATS

PART NO.	QTY	MODEL/RESTRICTION	MODEL/RESTRICTION	MODEL/RESTRICTION	FROM-TO
CONT'D 34 INT-		FE6 TAN			
+--------+ | 88-734 | +--------+		BOLT			
B456-88-815	4	(ILLUST. NO.1)			
B260-88-818	8	(ILLUST. NO.2)			
EA01-88-818	4	(ILLUST. NO.3)			

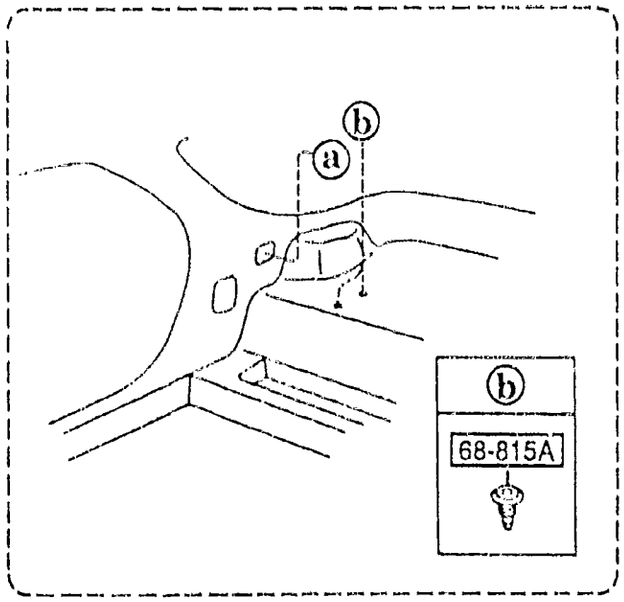

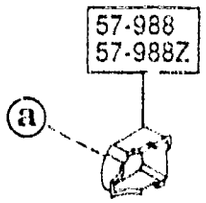

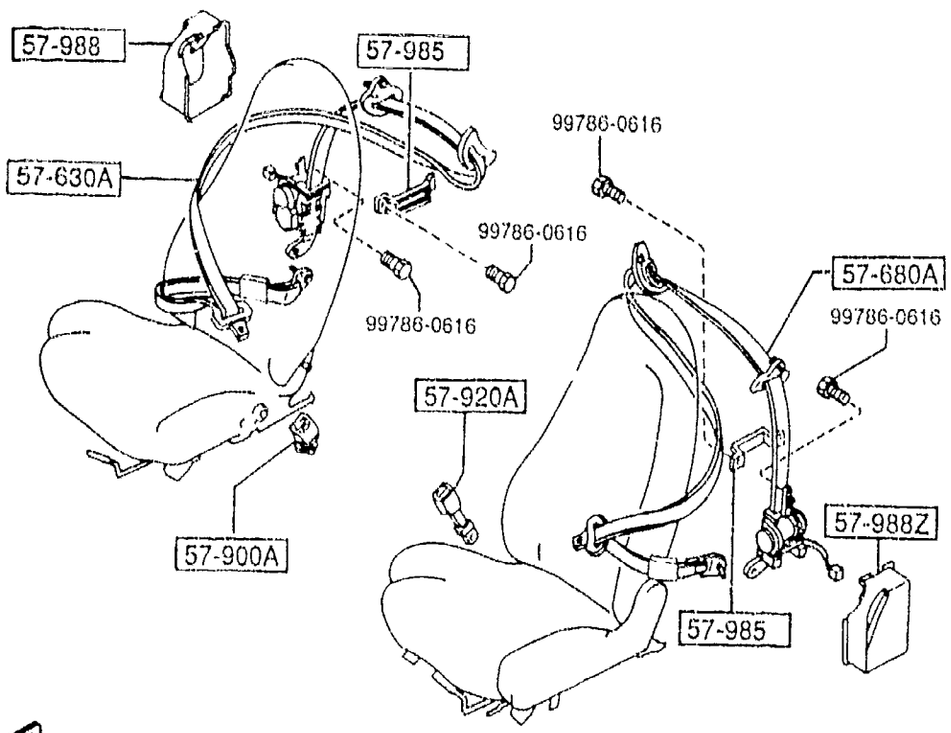

PART NO.	QTY	MODEL/RESTRICTION	MODEL/RESTRICTION	MODEL/RESTRICTION	FROM-TO
57-630A		BELT'B'(R),FRT SEAT			
FD15-57-630F	1				
00	INT-	FE5 FE6 FE7 BLACK			
57-680A		BELT'B'(L),FRT SEAT			
FD15-57-690F	1				
00	INT-	FE5 FE6 FE7 BLACK			
57-900A		BELT'A'(R),FRT SEAT			
FD01-57-620B	1				
02	INT-	FE5 FE6 FE7 BLACK			
57-920A		BELT'A'(L),FRT SEAT			
FD01-57-680D	1				
02	INT-	FE5 FE6 FE7 BLACK			
57-985		PLATE SET,SEAT BELT			
FD01-57-985A	2				
57-988		COVER(R),RETRACTOR			
FD01-57-988	1	(FOR FRONT)			
F100-57-988	1	(FOR REAR)			
57-988Z		COVER(L),RETRACTOR			
FD01-57-989	1	(FOR FRONT)			
F100-57-989	1	(FOR REAR)			
68-815A		TACKER			
1011-68-815	4				

5795 AIR BAG

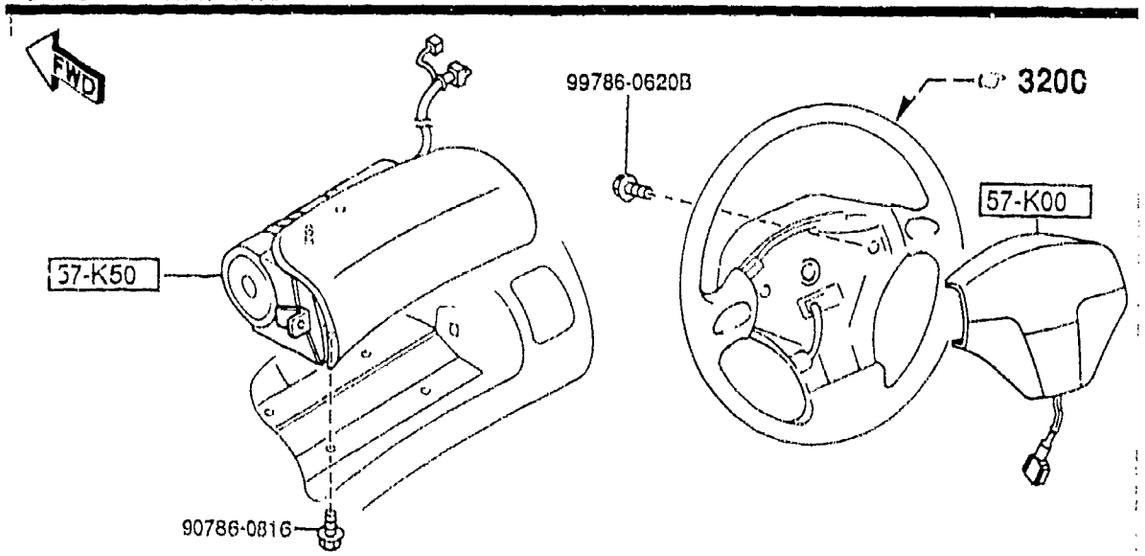

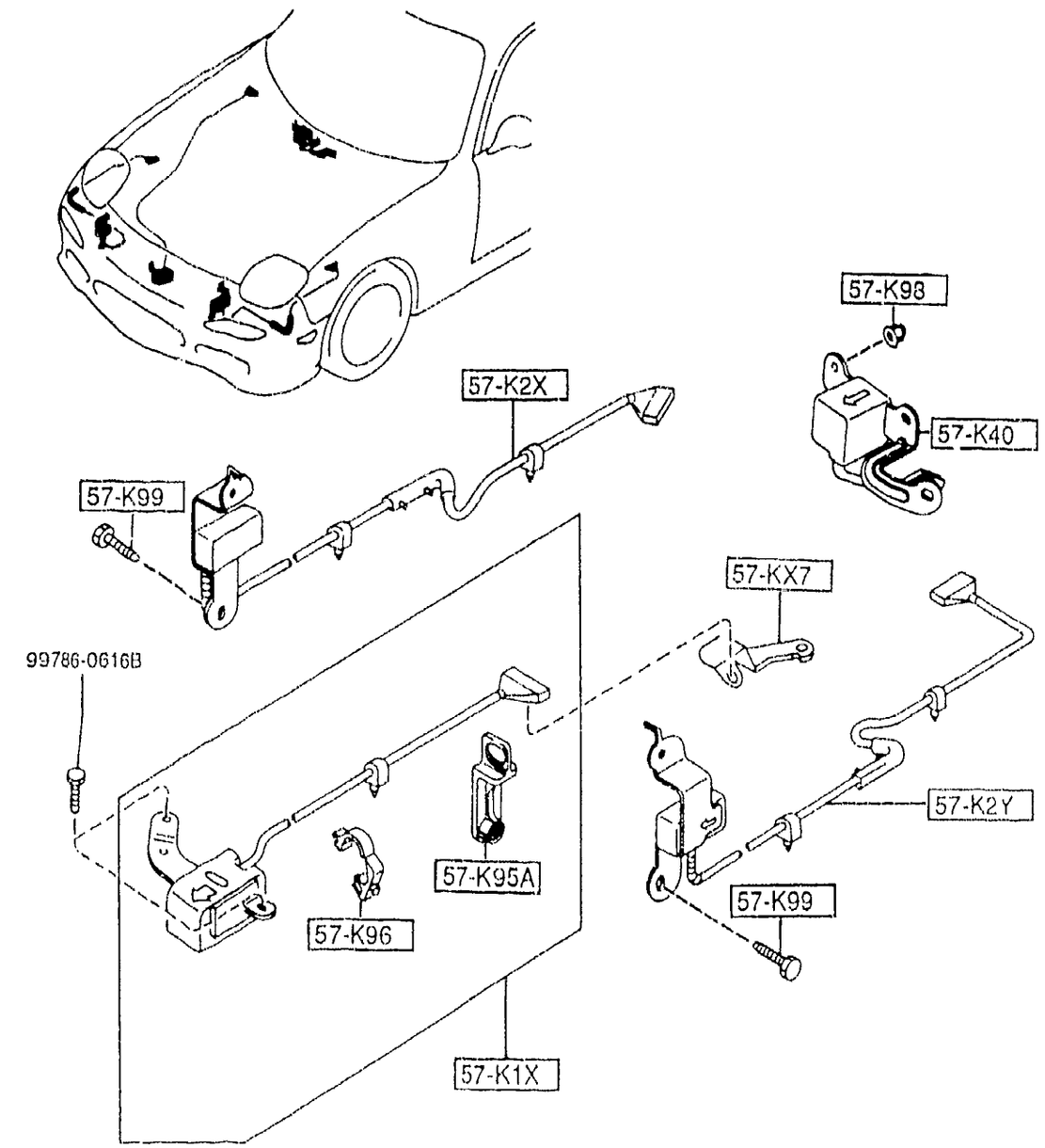

PART NO.	QTY	MODEL/RESTRICTION	MODEL/RESTRICTION	MODEL/RESTRICTION	FROM-TO
57-KX7		BRACKET,AIR BAG			
FD01-57-KX7	1				
57-K00		MODULE,AIR BAG			
FD15-57-K00A	1				
57-K1X		SENSOR,AIR BAG			
FD01-57-K1XD	1				
57-K2X		SENSOR(R),AIR BAG			
FD15-57-K2X	1				
57-K2Y		SENSOR(L),AIR BAG			
FD01-57-K2YC	1				
57-K40		SENSOR,AIR BAG-INNER			
FD01-57-K40A	1				
57-K50		MODULE,AIR BAG PASSENGER			
FD15-57-K7X	1				
57-K95A		CLIP,AIR BAG			
FD01-57-K95	1				
57-K96		CLIP			
FD01-57-K96	1				
57-K98		NUT			
FC66-57-K98	2				
57-K99		SCREW,TAPPING			
FC66-57-K99	4				

5800 FRONT DOORS

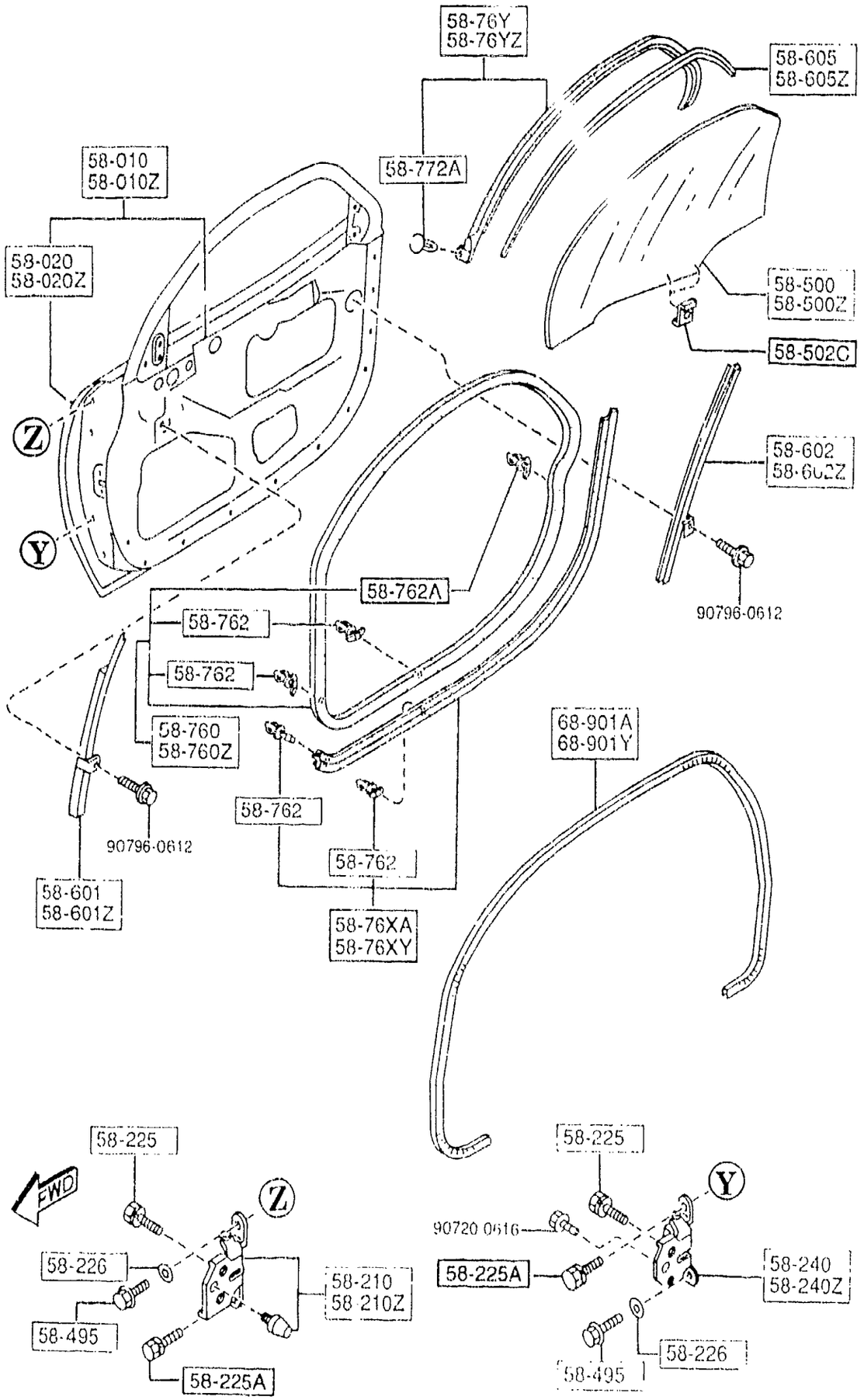

PART NO.	QTY	MODEL/RESTRICTION	MODEL/RESTRICTION	MODEL/RESTRICTION	FROM-TO
58-010		BODY(R),FRONT DOOR			
FD15-58-020C AN(FD15-58-020D)	1				-4B01
FD15-58-020D	1				4B01-
58-010Z		BODY(L),FRONT DOOR			
FD15-59-020C AN(FD15-59-020D)	1				-4B01
FD15-59-020D	1				4B01-
58-020		PANEL(R),OUT.-FRT DOOR			
FD01-58-030B	1				
58-020Z		PANEL(L),OUT.-FRT DOOR			
FD01-59-030B	1				
58-210		HINGE(R),DOOR-UPPER			
FD01-58-210A	1				
58-210Z		HINGE(L),DOOR-UPPER			
FD01-59-210A	1				
58-225		BOLT,SETTING-HINGE LOWER			
B455-58-225	8				
58-225A		BOLT,SETTING			
S085-58-225	4				
58-226		WASHER,SETTING			
GJ21-58-226	4				
58-240		HINGE(R),DOOR-LOWER			
FD01-58-240B	1				
58-240Z		HINGE(L),DOOR-LOWER			
FD01-59-240B	1				
58-495		BOLT,SET			
BA54-58-225	4				
58-500		GLASS(R),DOOR-FRT			

4B01 FD333 -400022

5800 FRONT DOORS

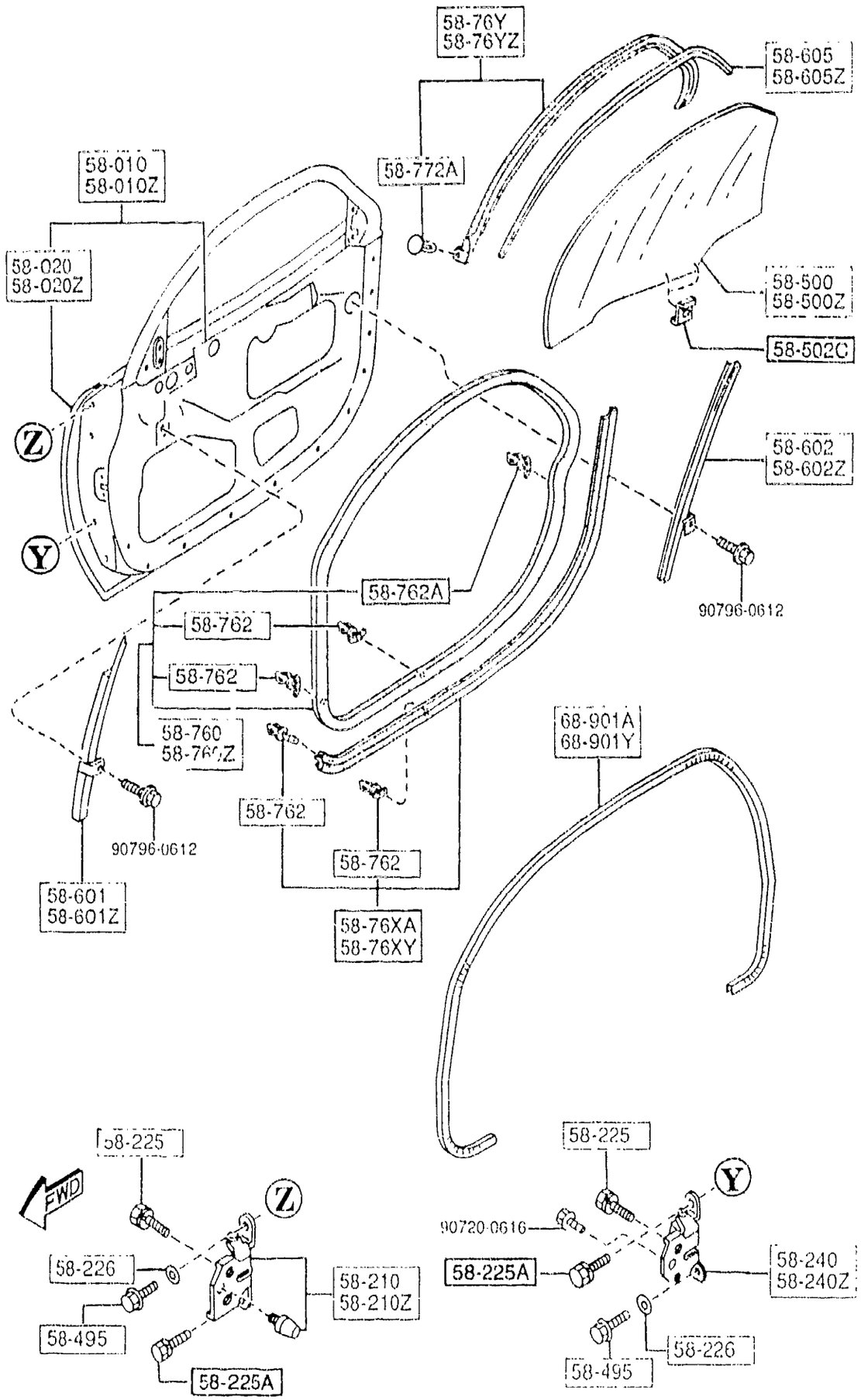

PART NO.	QTY	MODEL/RESTRICTION	MODEL/RESTRICTION	MODEL/RESTRICTION	FROM-TO
CONT'D					
FD15-58-511A	1				
58-500Z		GLASS(L),DOOR-FRT			
FD15-59-511A	1				
58-502C		GROMMET,SCREW			
S084-58-502	4				
58-601		GUIDE'A'(R),GLASS			
FD01-58-601B	1				
58-601Z		GUIDE'A'(L),GLASS			
FD01-59-601B	1				
58-602		GUIDE'B'(R),GLASS			
FD01-58-603A	1				
58-602Z		GUIDE'B'(L),GLASS			
FD01-59-603A	1				
58-605		CHANNEL(R),GLASS			
FD01-58-605E	1				
58-605Z		CHANNEL(L),GLASS			
FD01-59-605E	1				
58-76XA		WEATHERSTRIP(R),DOOR-LOW.			
FD01-58-76XA	1				
58-76XY		WEATHERSTRIP(L),DOOR-LOW.			
FD01-59-76XA	1				
58-76Y		WTHSTP(R),GLASS-F. DOOR			
FD01-58-76YF	1				
58-76YZ		WTHSTP(L),GLASS-F.DOOR			
FD01-59-76YF	1				
58-760		WEATHERSTRIP(R),DOOR			
FD01-58-760D	1				

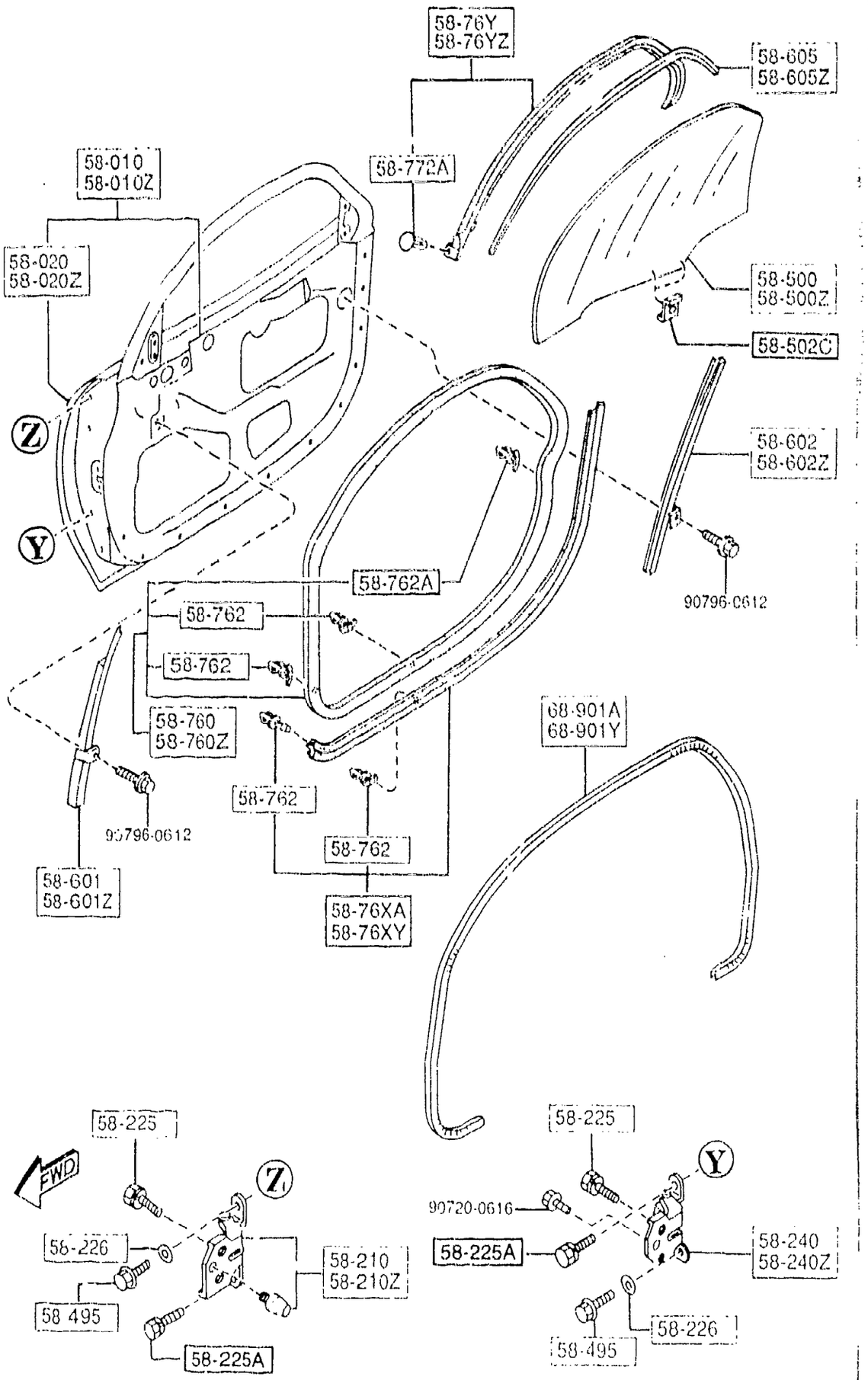

PART NO.	QTY	MODEL/RESTRICTION	MODEL/RESTRICTION	MODEL/RESTRICTION	FROM-TO
58-760Z		WEATHERSTRIP(L),DOOR			
FD01-59-760D	1				
58-762		FASTENER			
BC1D-58-762	52				
58-762A		FASTENER			
FD01-58-762	4				
58-772A		FASTENER			
1011-58-772	2				
68-901A		WELT(R),SEAMING			
FD01-68-911A	1				
02	INT-	FE5 FE6 FE7 BLACK			
68-901Y		WELT(L),SEAMING			
FD01-68-912A	1				
02	INT-	FE5 FE6 FE7 BLACK			

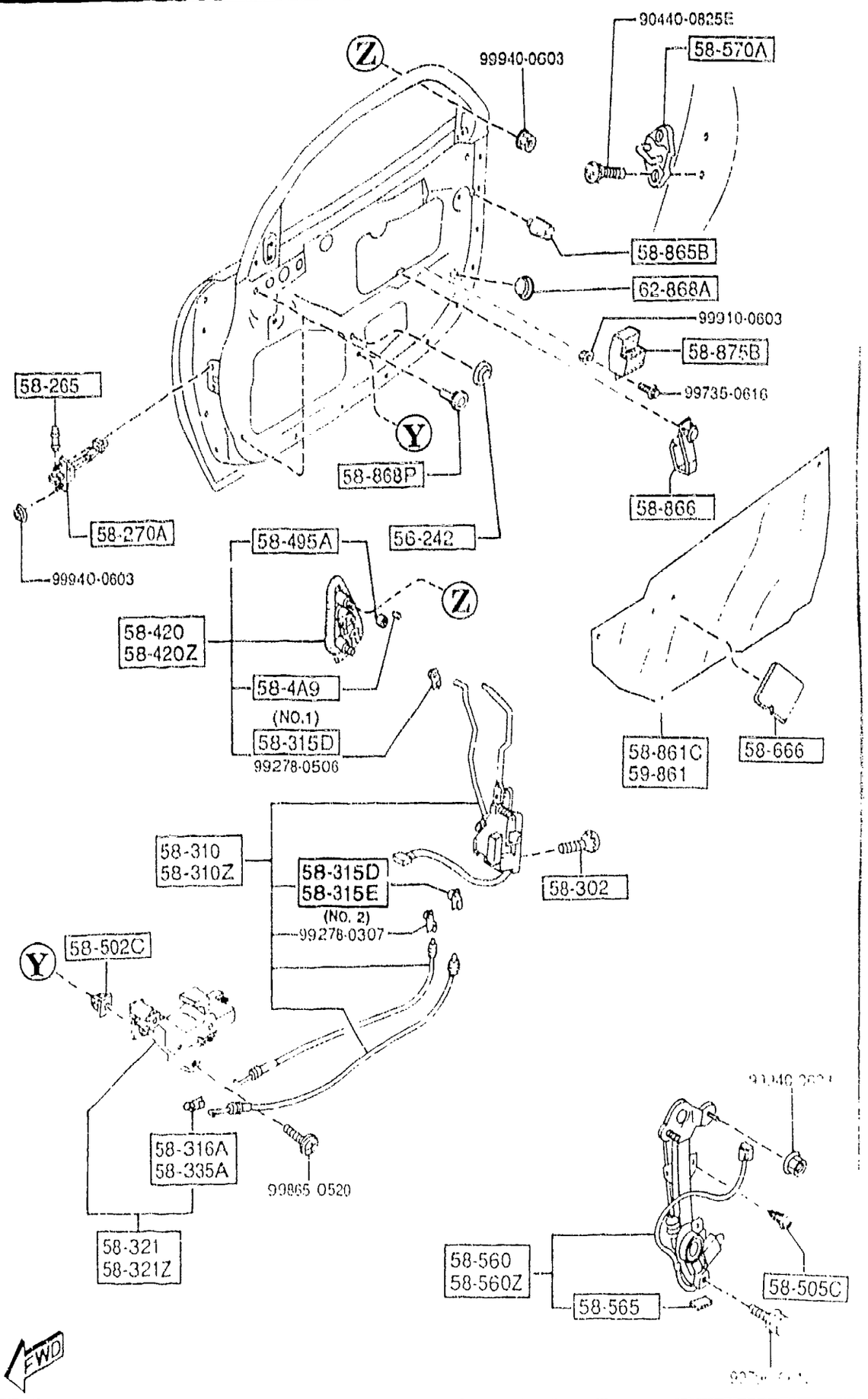

PART NO.	QTY	MODEL/RESTRICTION	MODEL/RESTRICTION	MODEL/RESTRICTION	FROM-TO
58-242		PLUG,DRAIN			
0118-56-242B	2				
58-265		PIN,CHECKER			
BC1D-58-265	2				
58-270A		CHECKER,DOOR			
FD01-58-270B	2				
58-302		SCREW,TAPPING-DOOR LOCK			
GA5R-58-302A	6				
58-310		LOCK(R),DOOR			
FD15-58-310	1				
58-310Z		LOCK(L),DOOR			
FD15-59-310	1				
58-315D		CLIP (R)			
FD01-58-315	1	(ILLUST. NO.1)			
G030-59-315	1	(ILLUST. NO.2)			
58-315E		CLIP (L)			
G030-58-315	1				
58-316A		CLIP			
B001-59-335	2	(FOR RIGHT)*			
58-321		HANDLE(R),INNER			
FD01-58-330C	1				
00	INT-	FE5 FE6 FE7 BLACK			
58-321Z		HANDLE(L),INNER			
FD01-59-330C	1				
00	INT-	FE5 FE6 FE7 BLACK			
58-335A		CLIP			
FB01-58-335	2	(FOR LEFT)			
58-4A9		PLUG,OUTER HANDLE			

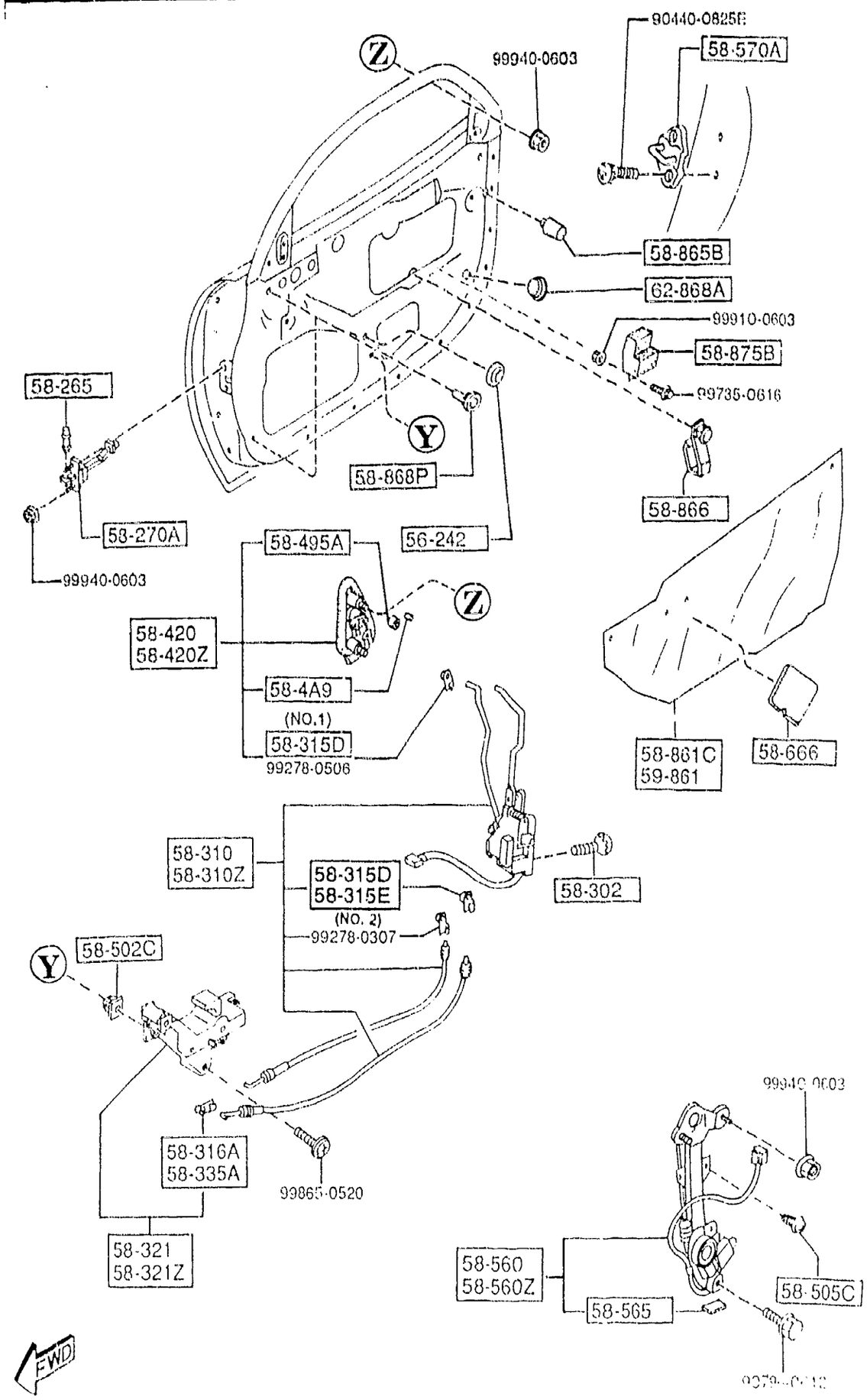

PART NO.	QTY	MODEL/RESTRICTION	MODEL/RESTRICTION	MODEL/RESTRICTION	FROM-TO
CONT'D					
HG30-58-4A9	1				
58-420		HANDLE(R),OUT.			
FD15-58-410C A (FD15-58-410D)	1				-5106
FD15-58-410D	1				5106-
58-420Z		HANDLE(L),OUT.			
FD15-59-410C A (FD15-59-410D)	1				-5201
FD15-59-410D	1				5201-
58-495A		RETAINER,LOCK CYL.			
J001-58-495	2				
58-502C		GROMMET,SCREW			
FD01-58-332	10				
58-505C		SCREW,WINDOW REGULATOR			
B092-58-505	4				
58-560		REGULATOR(R),WINDOW			
FD15-58-560B AN(FD15-58-560C)	1				-5418
FD15-58-560C	1				5418-
58-560Z		REGULATOR(L),WINDOW			
FD15-59-560B AN(FD15-59-560C)	1				-5417
FD15-59-560C	1				5417-
58-565		RUBBER,STOPPER			
GA7C-58-565	2				
58-570A		STRIKER			
FD01-58-361	2				
58-666		SHEET			
B092-58-862	5				-4C01
B092 58-862	2				4C01-

4C01 FD333 -400022
5106 FD333 -400025
5201 FD333 -400026
5417 FD333 -400028
5418 FD333 -400030

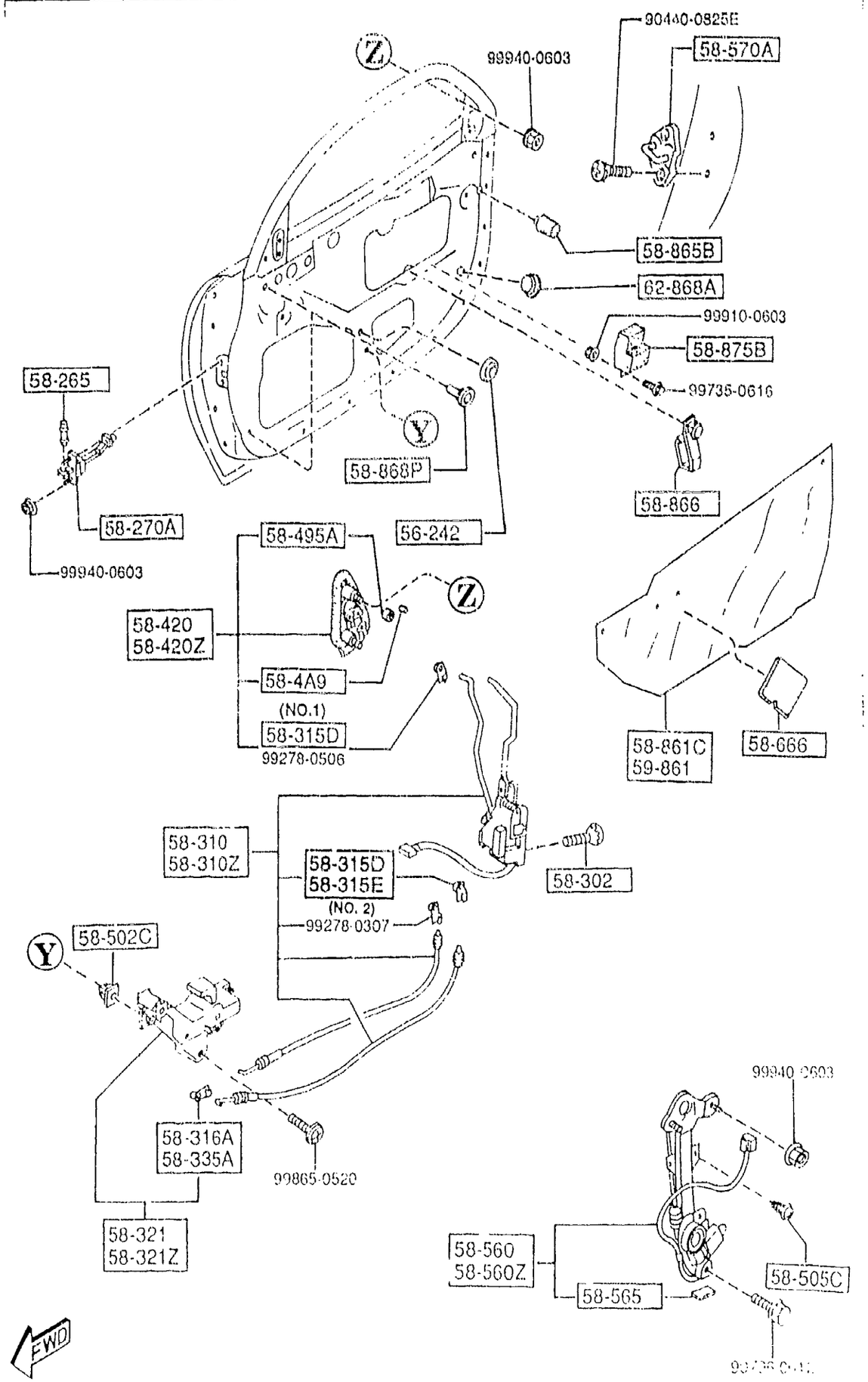

PART NO.	QTY	MODEL/RESTRICTION	MODEL/RESTRICTION	MODEL/RESTRICTION	FROM-TO
58-861C		SCREEN(R),FRONT DOOR			
FD15-58-861B	1				
58-865B		CUSHION,RUBBER			
G067-58-873	2				
58-866		CLIP			
B038-58-866	4				
58-868P		COVER,HOLE-DOOR BODY			
FD01-58-868	4				-4C01
LA01-57-425A	4				4C01-
58-875B		PAD			
FD15-58-875E	2				
59-861		SCREEN(L),FRONT DOOR			
FD15-59-861B	1				
62-868A		COVER,HOLE-LIFT GATE			
B499-62-868	2				-4B01

4B01 FD333 -400022
4C01 FD333 -400022

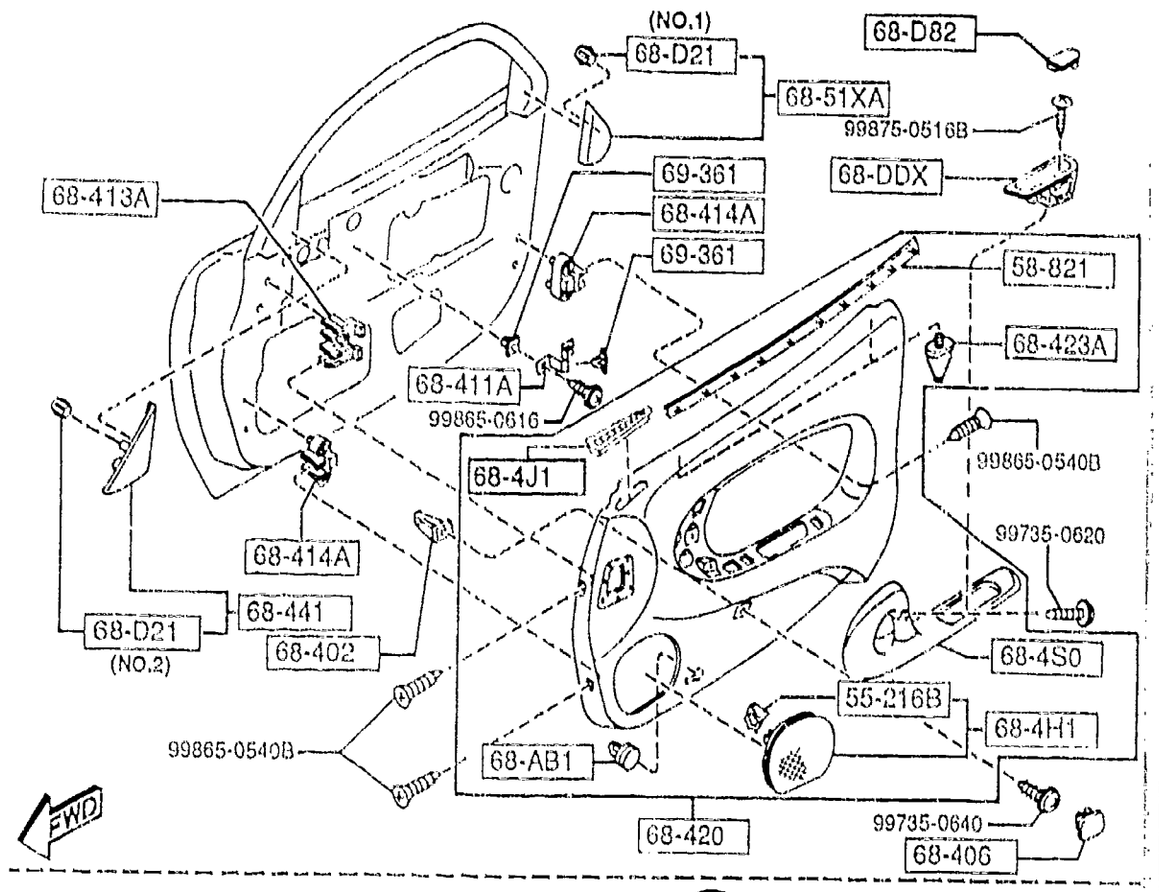

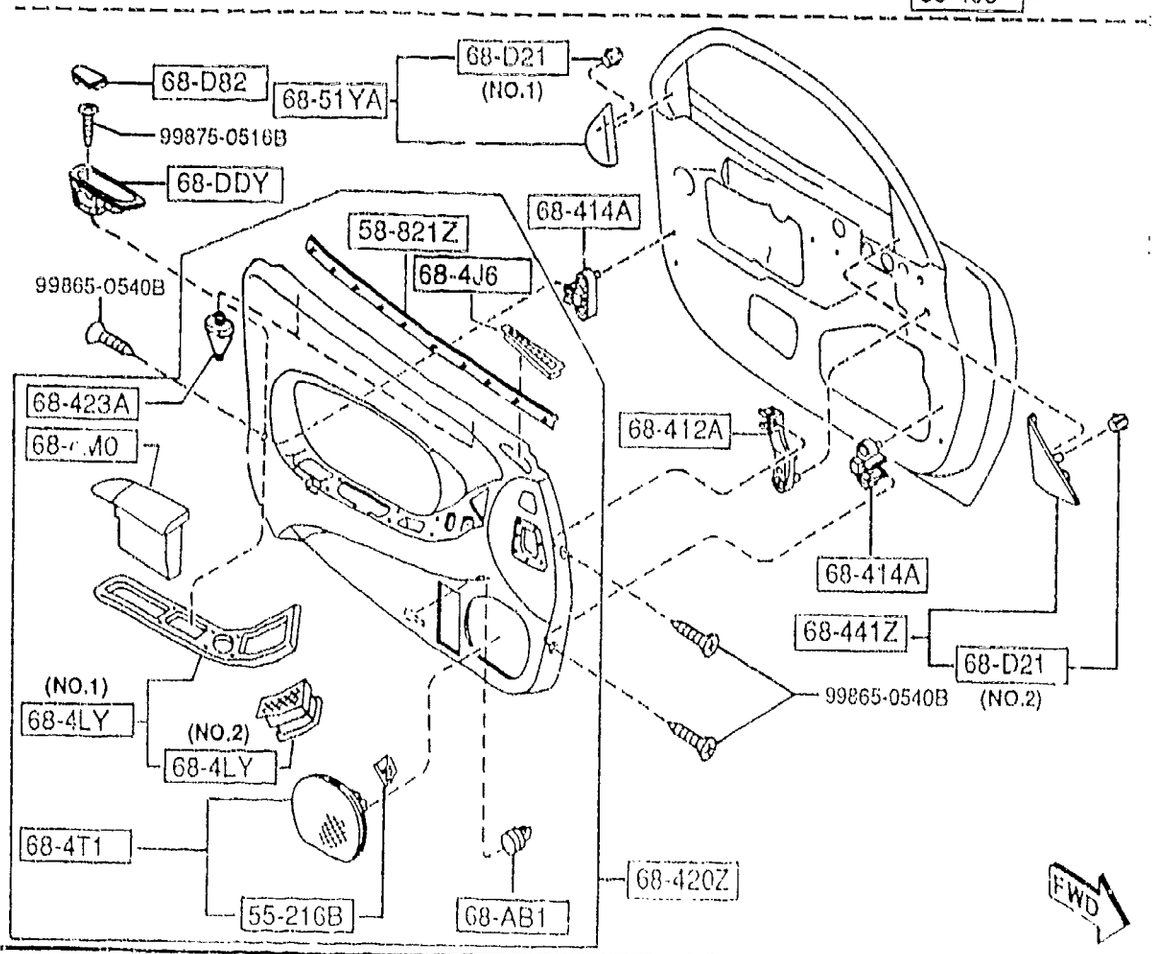

AUFA06

PART NO.	QTY	MODEL/RESTRICTION	MODEL/RESTRICTION	MODEL/RESTRICTION	FROM-TO
55-216B		SPRING,CENTER PANEL			
B092-55-257	4				
56-821		WEATHERSTRIP(R),INN.			
FD01-58-821	1				
58-821Z		WEATHERSTRIP(L),INN.			
FD01-59-821	1				
68-AB1		FASTENER			
G350-68-AB1	6				
68-DDX		PANEL(R),RECESS			
FD01-68-DDXE	1				
00	INT-	FE5 FE6 FE7 BLACK			
68-DDY		PANEL(L),RECESS			
FD01-68-DDYE	1				
00	INT-	FE5 FE6 FE7 BLACK			
68-D21		CLIP,TRIM			
FD01-68-D21	4	(ILLUST. NO.1)			
LA10-68-D21	2	(ILLUST. NO.2)			
68-D82		CAP,ASSIST-DOOR TRIM			
FD01-68-D82A	2				
00	INT-	FE5 FE6 FE7 BLACK			
68-4H1		GRILLE(R),SPEAKER			
FD01-68-4H0B	1				
02	INT-	FE5 FE6 FE7 BLACK			
68-4J1		GRILLE(R),SIDE DEMISTER			
FD01-68-4J1	1				
02	INT-	FE5 FE6 FE7 BLACK			
68-4J6		GRILLE(L),SIDE DEMISTER			
FD01-68-4J6	1				
02	INT-	FE5 FE6 FE7 BLACK			

5840 FRONT DOOR TRIMS & RELATED PARTS

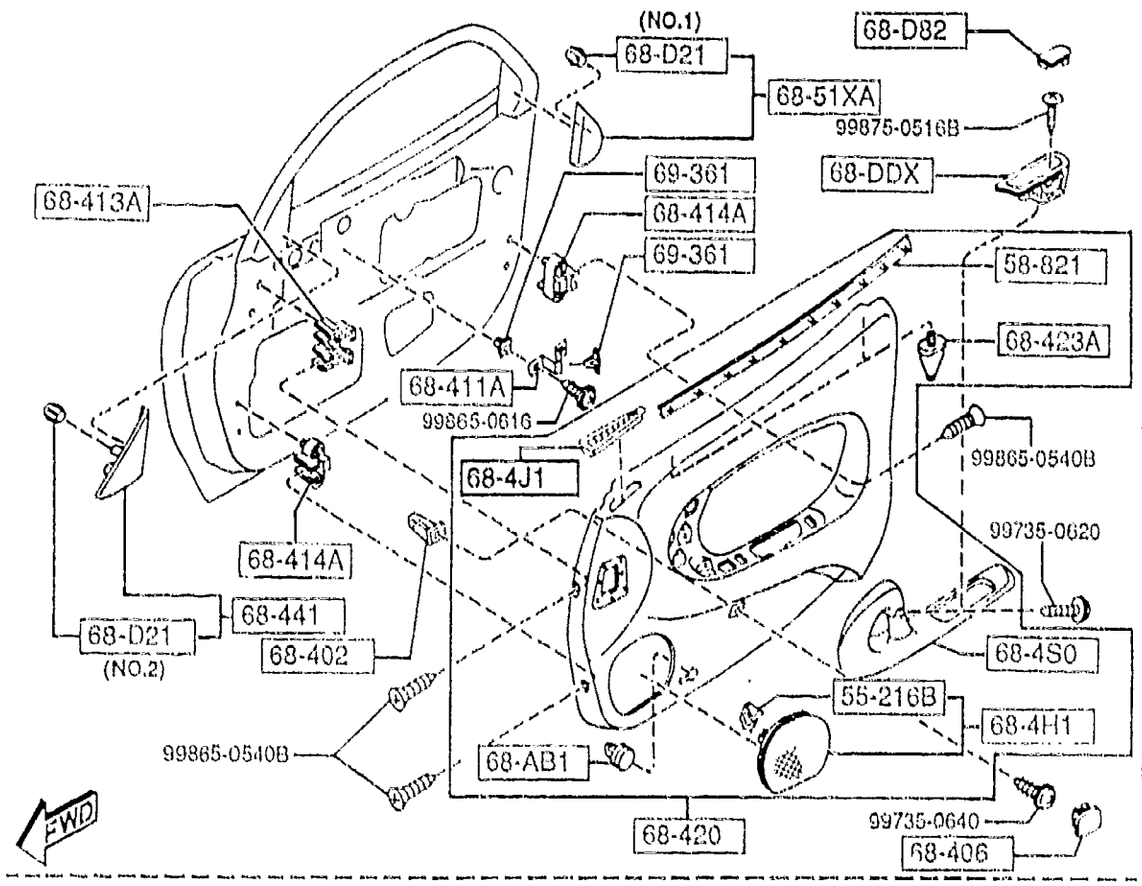

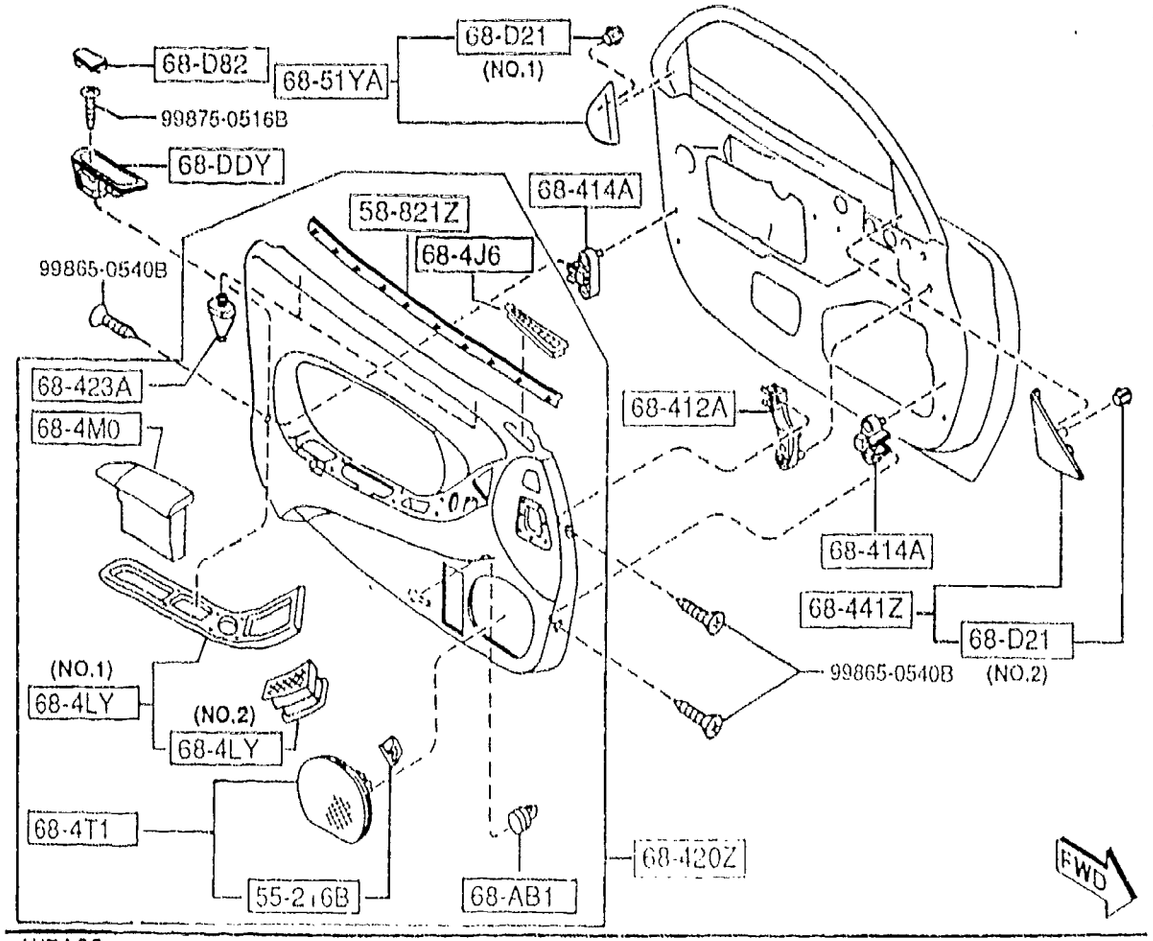

PART NO.	QTY	MODEL/RESTRICTION	MODEL/RESTRICTION	MODEL/RESTRICTION	FROM-TO
68-4LY		PANEL(L),SWITCH			
FD15-68-4LY	1	(ILLUST. NO.1)			
00	INT-	FE5 FE6 FE7 BLACK			
FD15-68-4L6	1	(ILLUST. NO.2)			
00	INT-	FE5 FE6 FE7 BLACK			
68-4M0		LID(L),ARM REST-TRIM			
FD15-68-4M0B	1				
00	INT-	FE5 FE6 FE7 BLACK			
68-4S0		GRIP,FRT ASSIST			
FD15-69-44X	1				
00	INT-	FE5 FE6 FE7 BLACK			
68-4T1		GRILLE(L),SPEAKER			
FD01-68-4W0B	1				
02	INT-	FE5 FE6 FE7 BLACK			
68-402		GROMMET,SCREW			
H300-68-402	2				
68-406		CAP,DOOR TRIM			
FD01-68-406	1				
02	INT-	FE5 FE6 FE7 BLACK			
68-411A		BRACKET,TRIM			
FD01-68-411	1				
68-412A		BRACKET,TRIM			
FD01-68-412A	1				
68-413A		BRACKET,TRIM			
FD01-68-413B	1				
68-414A		BRACKET,TRIM			
FD01-68-414A	4				
68-420		TRIM(R),DOOR			
FD15-68-420J	1				

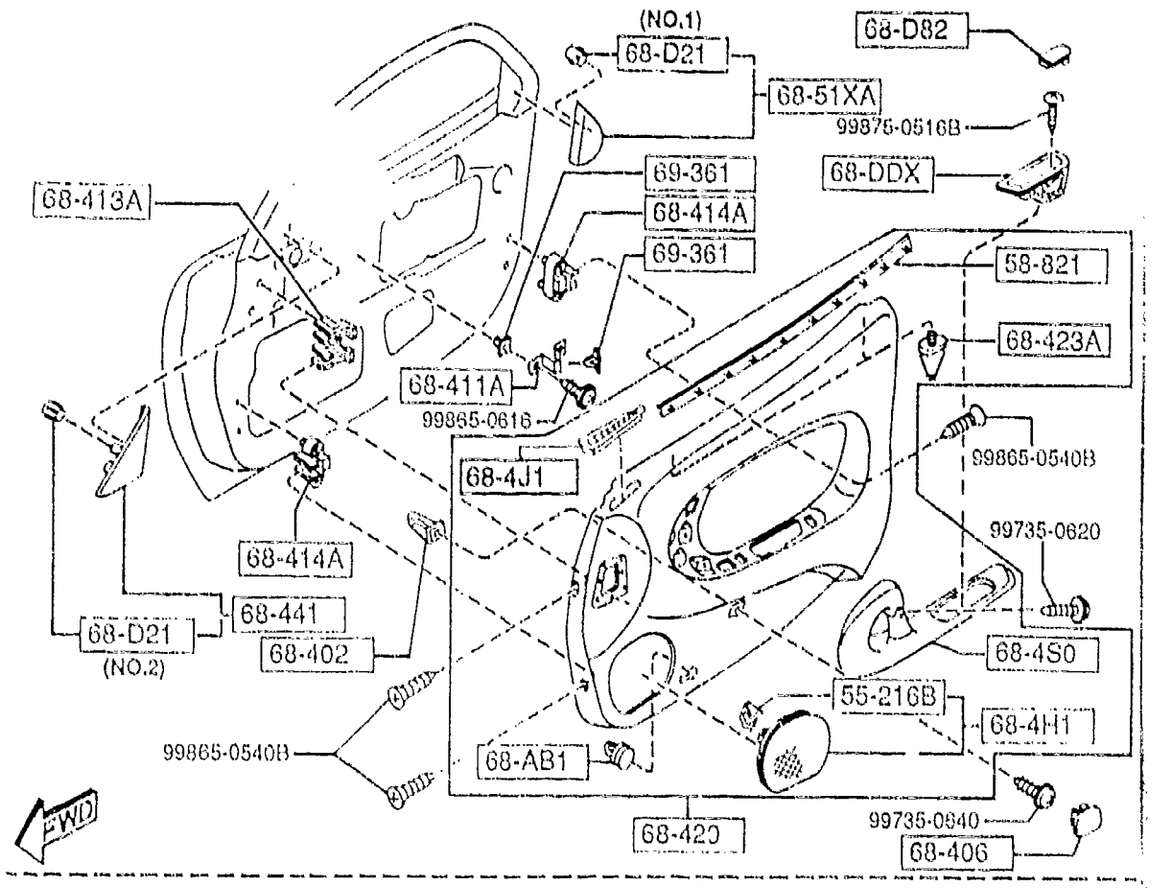

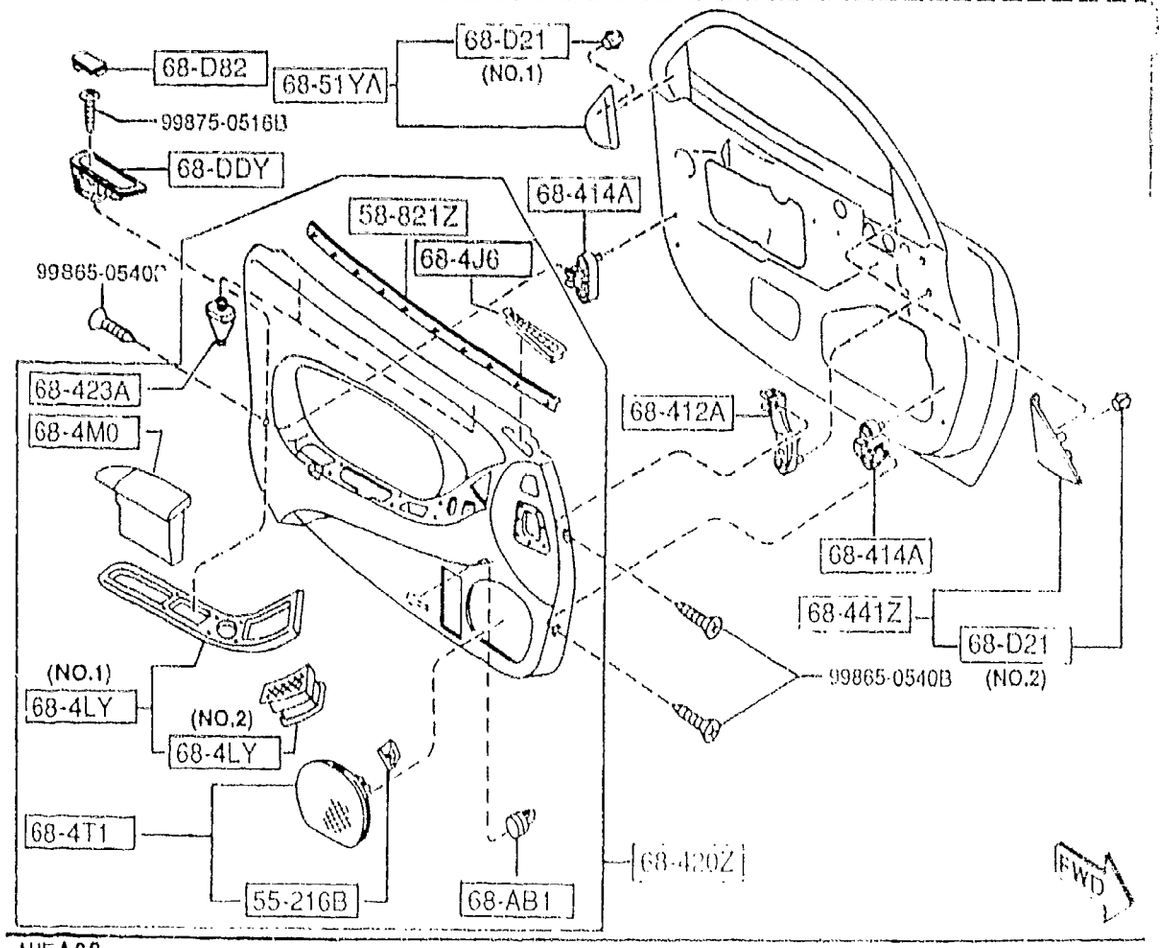

AUFA06

5840 -3 * FRONT DOOR TRIMS & RELATED PARTS

PART NO.	QTY	MODEL/RESTRICTION	MODEL/RESTRICTION	MODEL/RESTRICTION	FROM-TO
CONT'D					
02 INT-		FE5 FE6 FE7 BLACK			
68-420Z		TRIM(L),DOOR			
FD15-68-450J	1				
02 INT-		FE5 FE6 FE7 BLACK			
68-423A		PIN,LOCATOR			
FD01-68-423A	4				
68-441		GARNISH(R),DOOR			
FD01-68-DJXC	1				
68-441Z		GARNISH(L),DOOR			
FD01-68-DJYC	1				
68-51XA		GARNISH(R),SAIL-INN.			
FD01-68-51XD	1				
68-51YA		GARNISH(L),SAIL-INN.			
FD01-68-51YD	1				
69-361		GROMMET,SCREW			
B316-69-361	3				