1996-98 Talon MFI (Non-Turbo) Engine Schematics

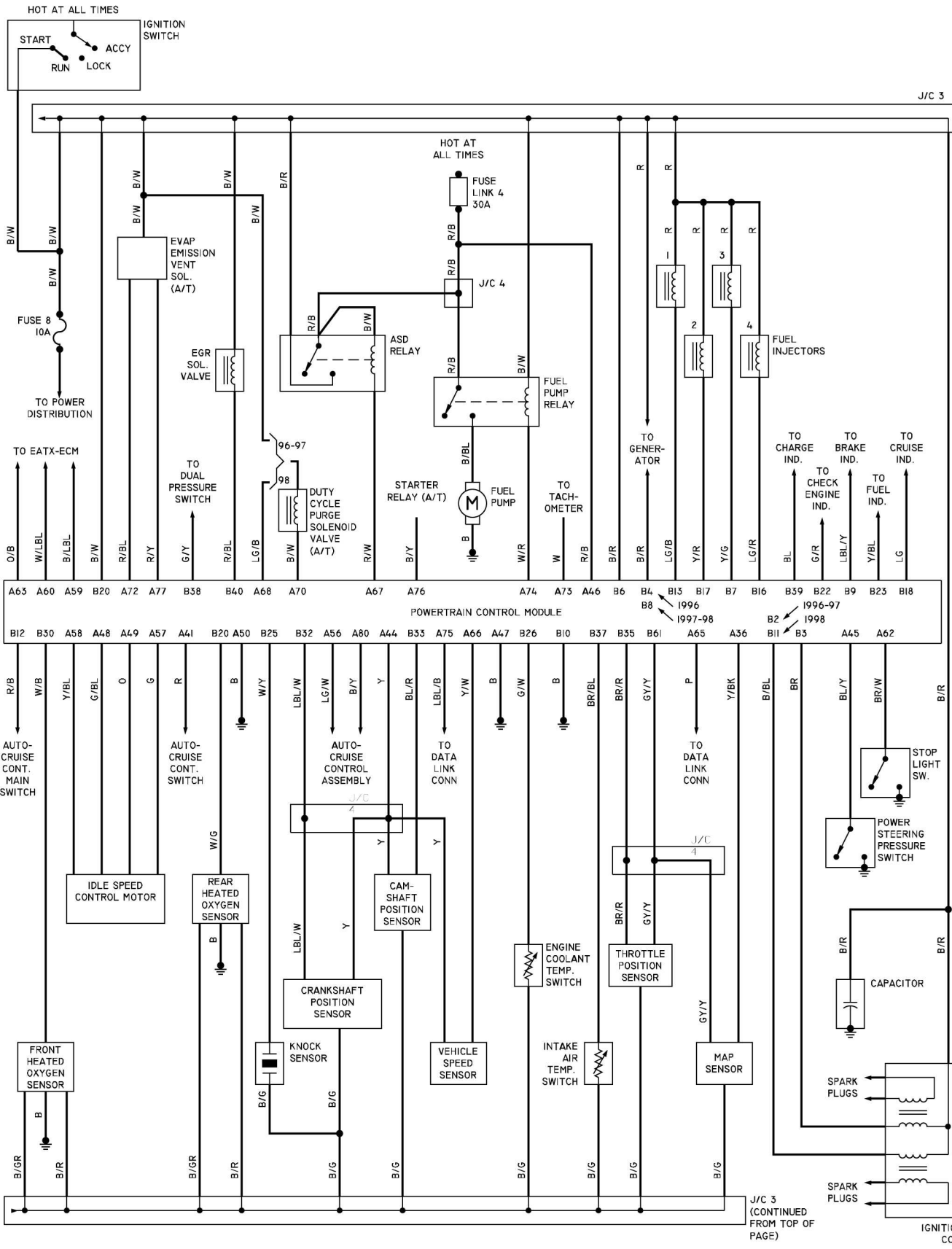

DIAGRAM 3