1996-98 Talon & Eclipse MFI (Turbo) Engine Schematics
1996-98 Eclipse 2.4L MFI Engine Schematics

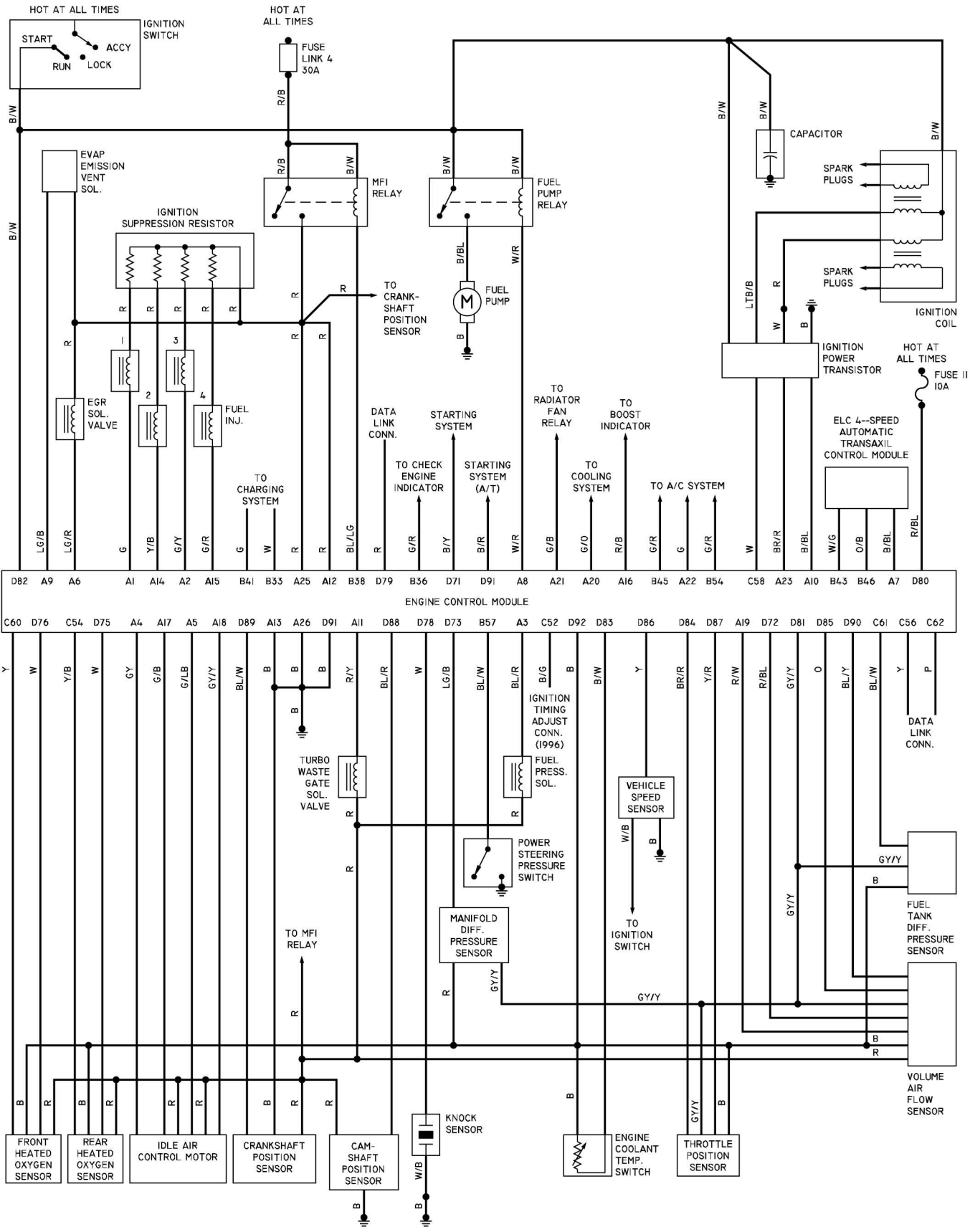

DIAGRAM 4