1994-95 Talon & Eclipse MFI (Turbo) Engine Schematics

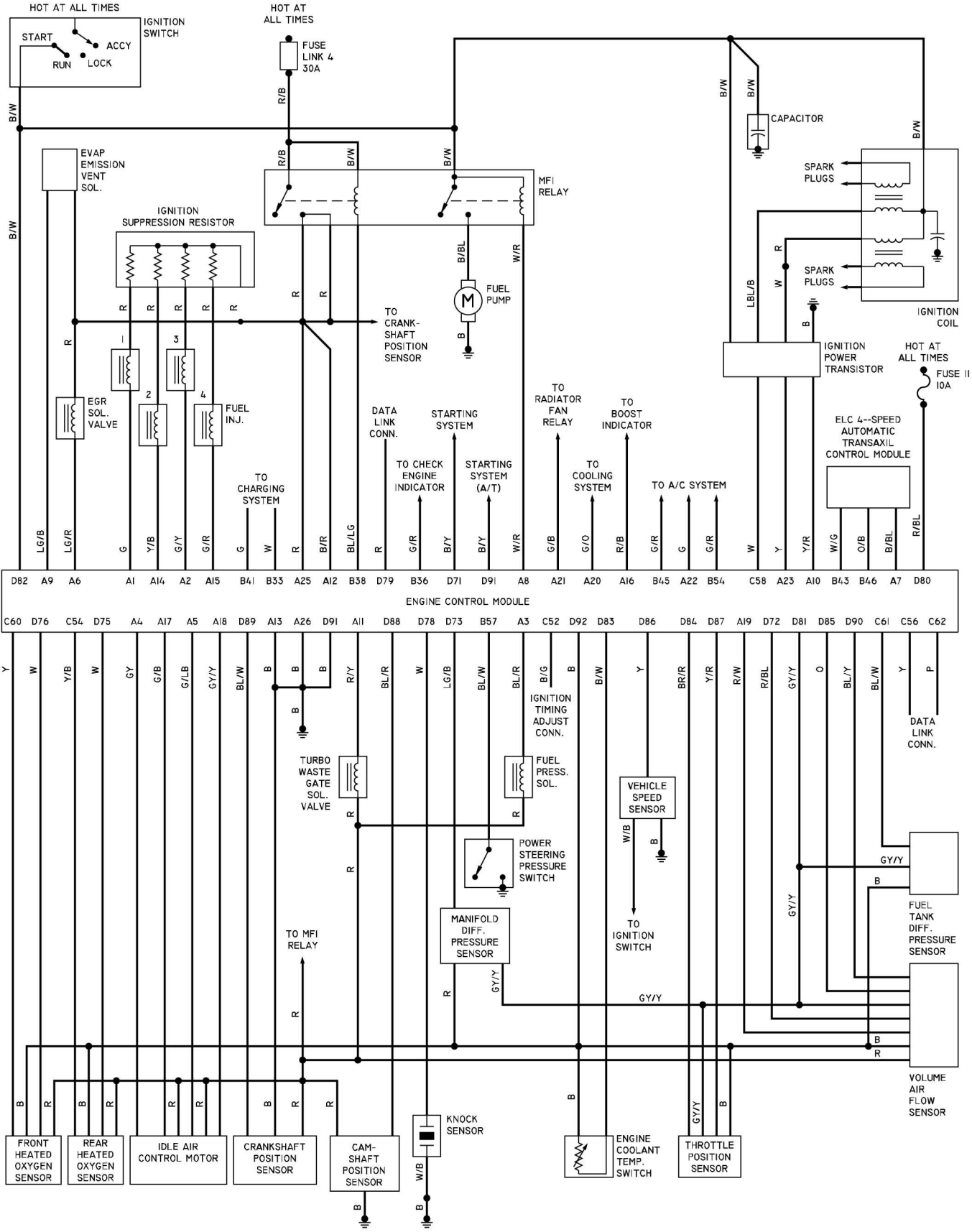

DIAGRAM 5