1992-95 DIAMANTE CHASSIS SCHEMATIC

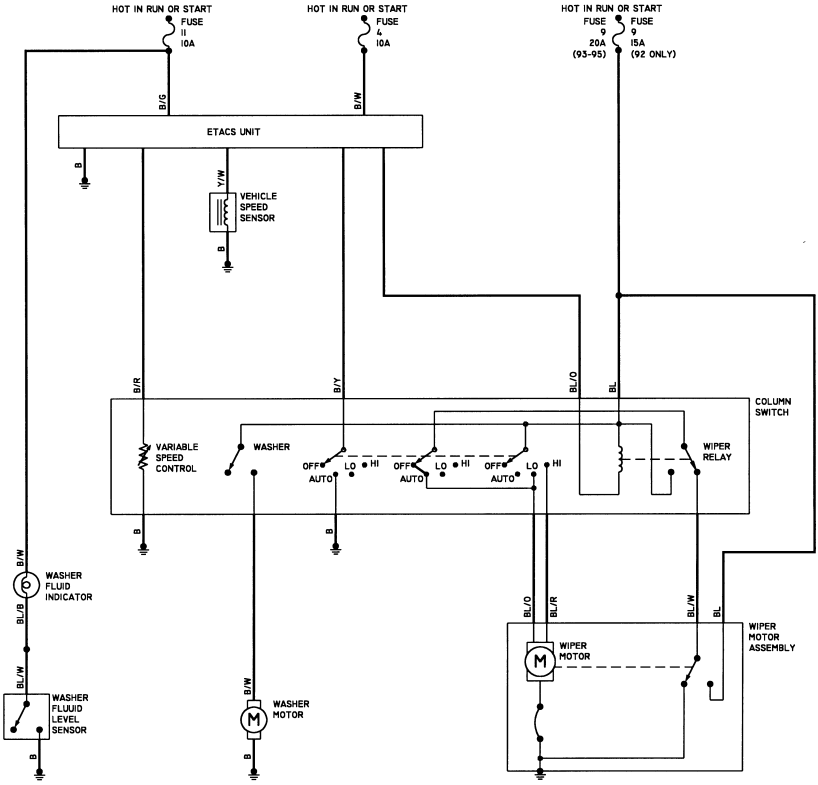

DIAGRAM 52