1993-96 MIRAGE CHASSIS SCHEMATIC

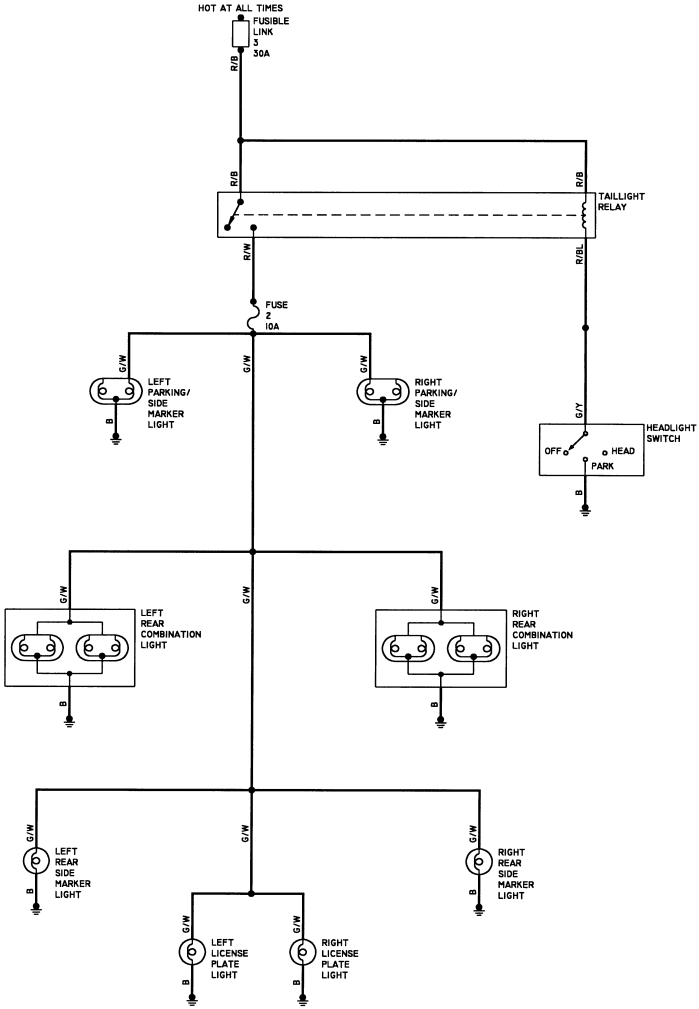

DIAGRAM 68