1990-92 GALANT 2.0L SOHC ENGINE SCHEMATIC

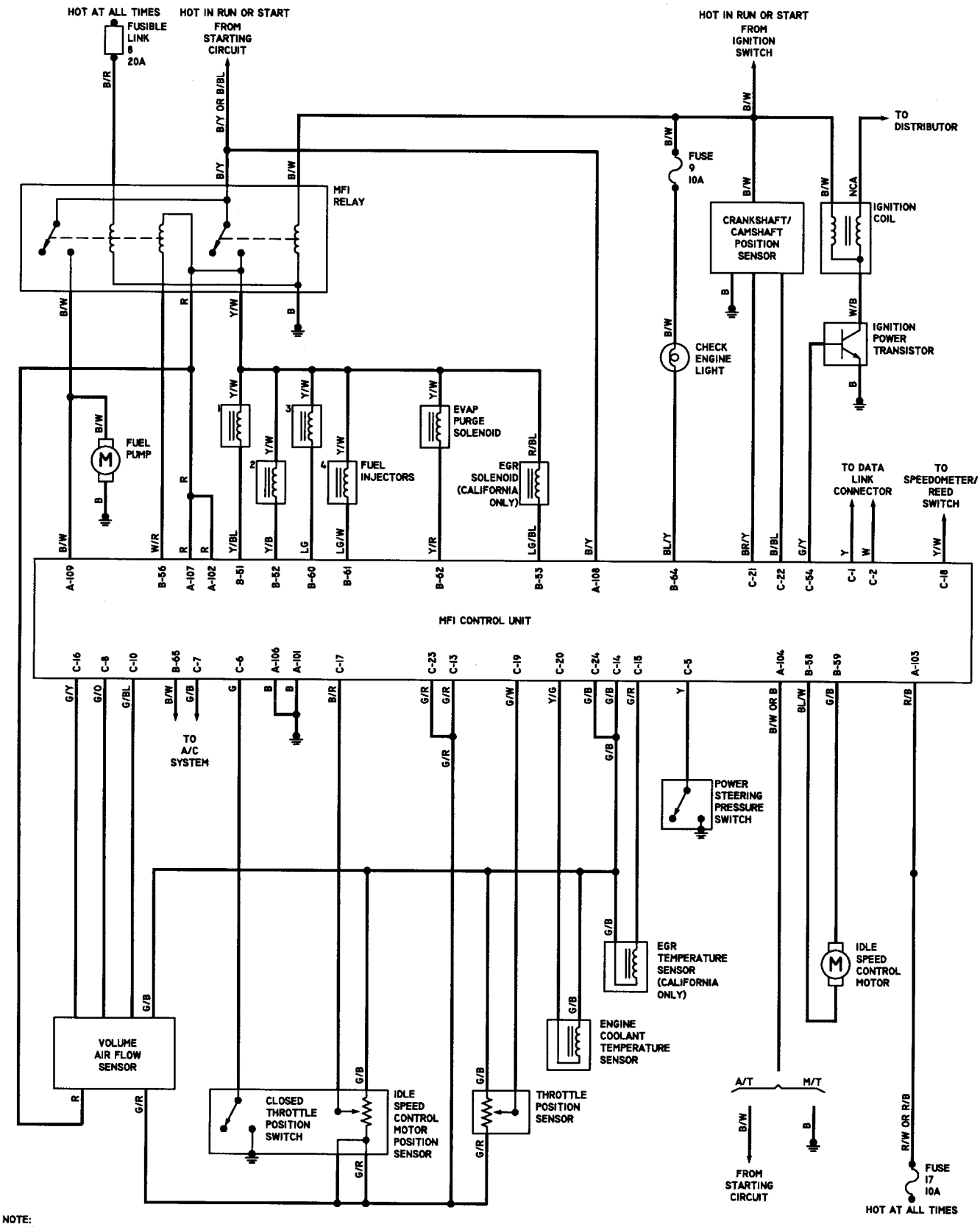

NOTE:
MFI CONNECTOR C10 = "A"
MFI CONNECTOR C11 = "B"
MFI CONNECTOR C12 = "C"

DIAGRAM 3