# 1991-93 GALANT 2.0L DOHC ENGINE SCHEMATIC

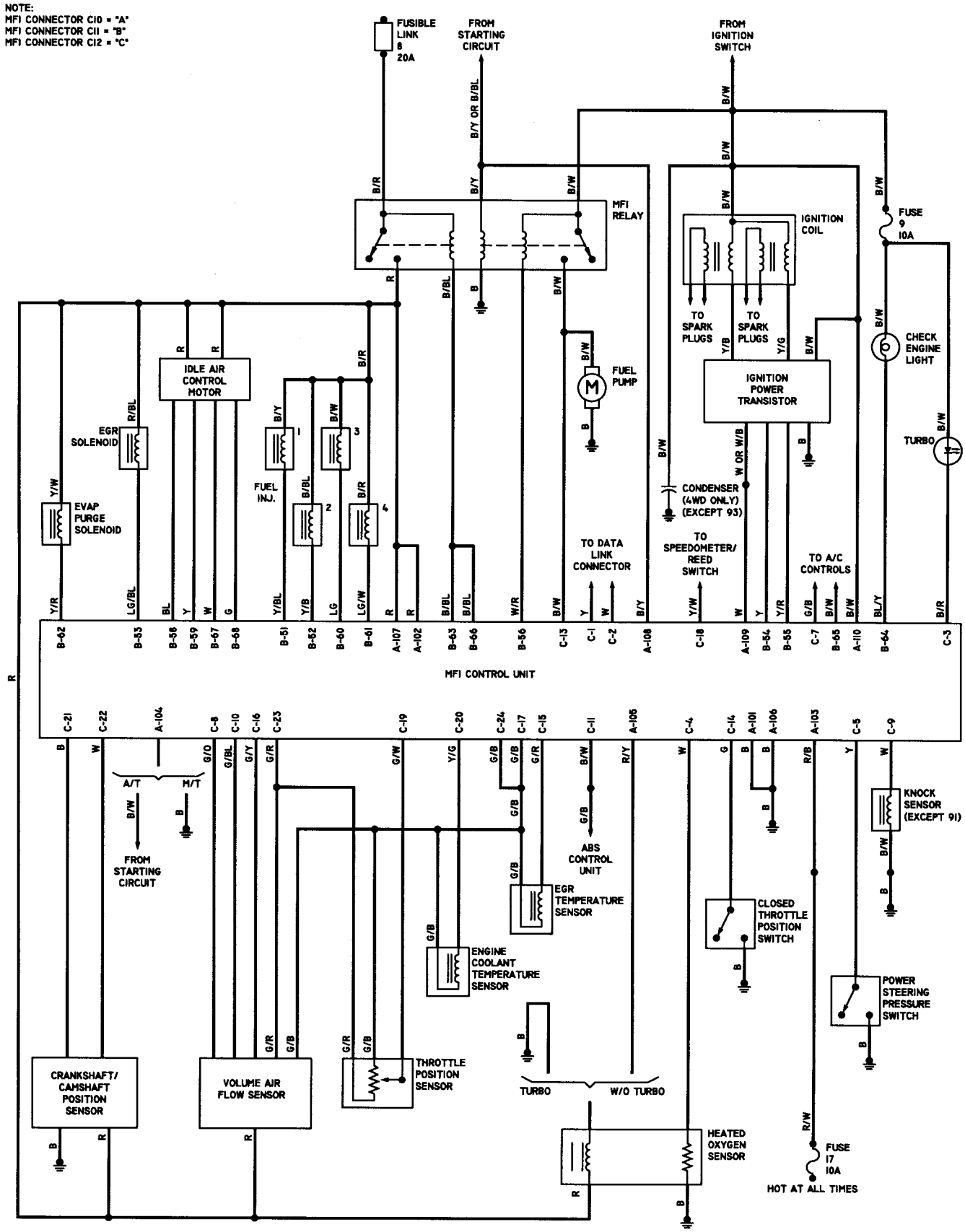


DIAGRAM 6