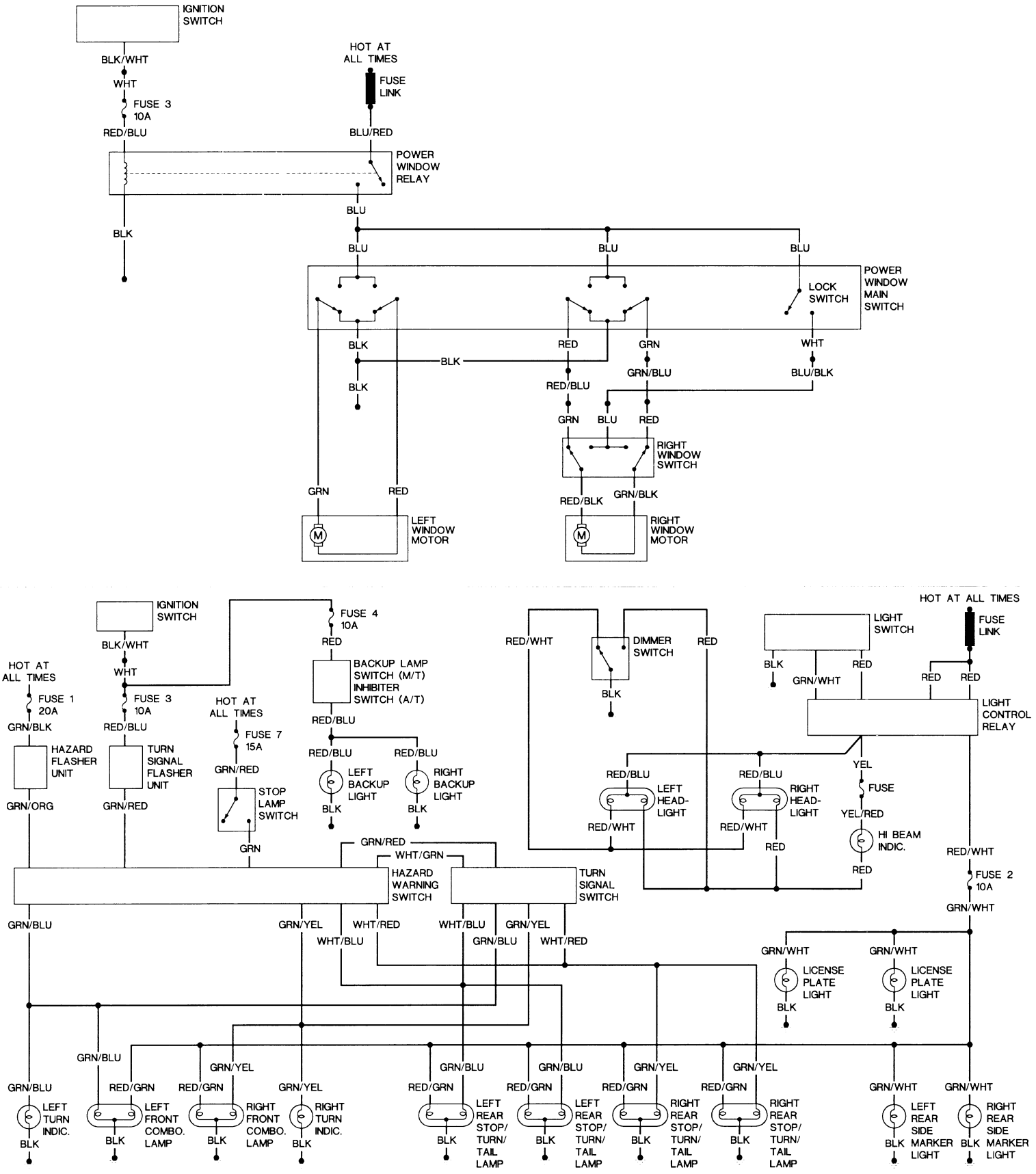
IGNITION SWITCH
BLK/WHT
WHT
FUSE 3 10A
RED/BLU
HOT AT ALL TIMES
FUSE LINK
BLU/RED
POWER WINDOW RELAY
BLU
BLK
BLU
BLU
BLU
POWER WINDOW MAIN SWITCH
LOCK SWITCH
BLK
RED
GRN
WHT
BLK
GRN/BLU
BLU/BLK
BLK
RED/BLU
GRN
BLU
RED
RIGHT WINDOW SWITCH
GRN
RED
RED/BLK
GRN/BLK
LEFT WINDOW MOTOR
RIGHT WINDOW MOTOR
IGNITION SWITCH
BLK/WHT
WHT
HOT AT ALL TIMES
FUSE 1 20A
GRN/BLK
FUSE 3 10A
RED/BLU
HAZARD FLASHER UNIT
TURN SIGNAL FLASHER UNIT
GRN/ORG
GRN/RED
HOT AT ALL TIMES
FUSE 7 15A
GRN/RED
STOP LAMP SWITCH
GRN
FUSE 4 10A
RED
BACKUP LAMP SWITCH (M/T) INHIBITER SWITCH (A/T)
RED/BLU
RED/BLU
RED/BLU
LEFT BACKUP LIGHT
RIGHT BACKUP LIGHT
BLK
BLK
GRN/RED
WHT/GRN
HAZARD WARNING SWITCH
TURN SIGNAL SWITCH
RED/WHT
DIMMER SWITCH
RED
BLK
LIGHT SWITCH
HOT AT ALL TIMES
FUSE LINK
BLK
GRN/WHT
RED
RED
RED
LIGHT CONTROL RELAY
RED/BLU
RED/BLU
YEL
LEFT HEAD-LIGHT
RIGHT HEAD-LIGHT
FUSE
RED/WHT
RED/WHT
YEL/RED
HI BEAM INDIC.
RED
RED
RED/WHT
FUSE 2 10A
GRN/WHT
GRN/BLU
GRN/YEL
WHT/RED
WHT/BLU
WHT/BLU
GRN/YEL
GRN/BLU
WHT/RED
GRN/WHT
GRN/WHT
LICENSE PLATE LIGHT
LICENSE PLATE LIGHT
BLK
BLK
GRN/BLU
GRN/YEL
GRN/BLU
GRN/BLU
GRN/YEL
GRN/YEL
GRN/BLU
RED/GRN
RED/GRN
GRN/YEL
RED/GRN
RED/GRN
RED/GRN
RED/GRN
GRN/WHT
GRN/WHT
LEFT TURN INDIC.
LEFT FRONT COMBO. LAMP
RIGHT FRONT COMBO. LAMP
RIGHT TURN INDIC.
LEFT REAR STOP/ TURN/ TAIL LAMP
LEFT REAR STOP/ TURN/ TAIL LAMP
RIGHT REAR STOP/ TURN/ TAIL LAMP
RIGHT REAR STOP/ TURN/ TAIL LAMP
LEFT REAR SIDE MARKER LIGHT
RIGHT REAR SIDE MARKER LIGHT
BLK