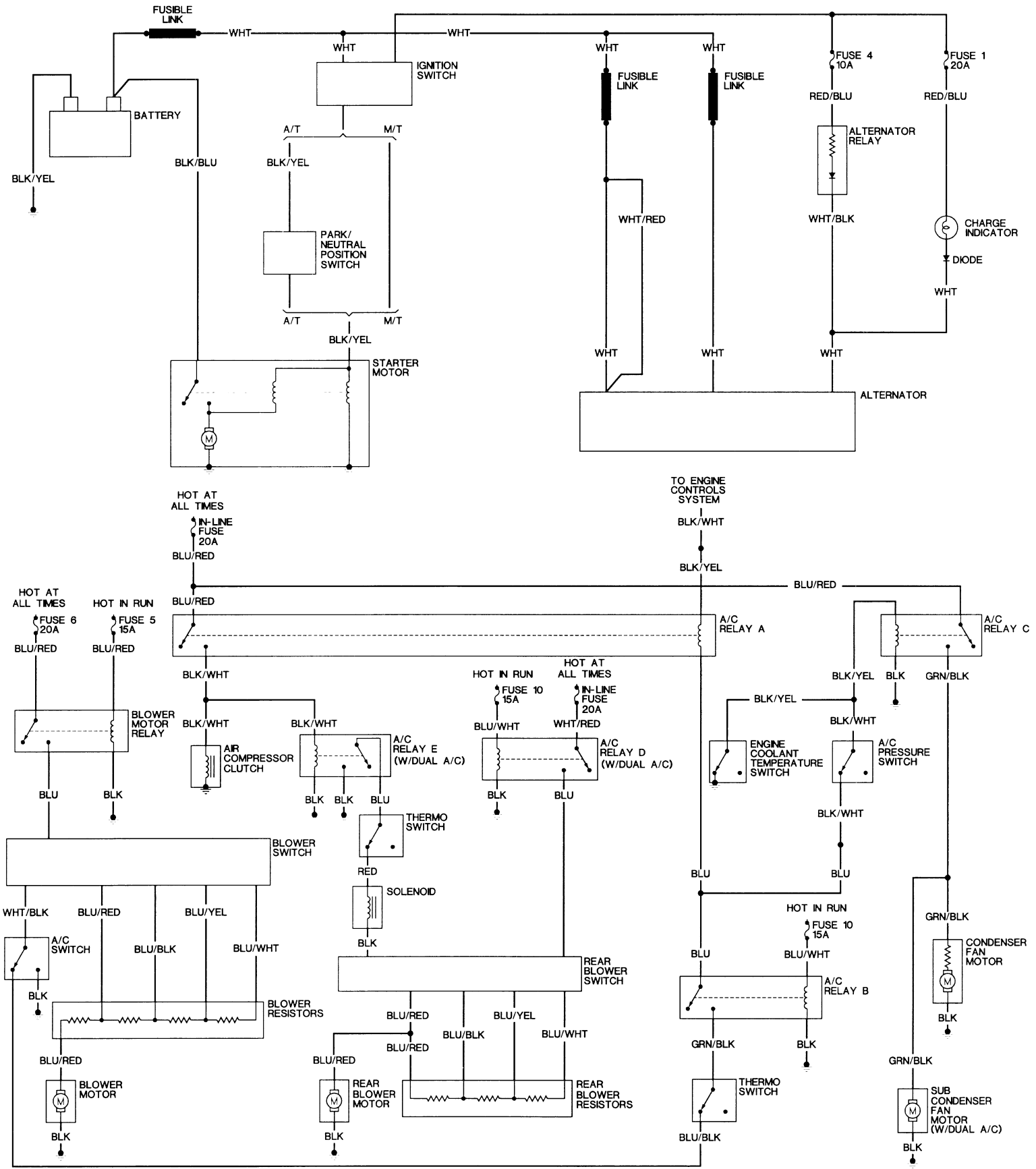
FUSIBLE LINK
WHT
WHT
WHT
WHT
WHT
IGNITION SWITCH
FUSIBLE LINK
FUSIBLE LINK
FUSE 4 10A
FUSE 1 20A
RED/BLU
RED/BLU
BATTERY
ALTERNATOR RELAY
A/T
M/T
BLK/YEL
BLK/BLU
BLK/YEL
WHT/RED
WHT/BLK
CHARGE INDICATOR
PARK/ NEUTRAL POSITION SWITCH
DIODE
WHT
A/T
M/T
BLK/YEL
STARTER MOTOR
WHT
WHT
WHT
ALTERNATOR
HOT AT ALL TIMES
IN-LINE FUSE 20A
BLU/RED
TO ENGINE CONTROLS SYSTEM
BLK/WHT
BLK/YEL
BLU/RED
HOT AT ALL TIMES
FUSE 6 20A
HOT IN RUN
FUSE 5 15A
BLU/RED
BLU/RED
BLU/RED
BLU/RED
A/C RELAY A
A/C RELAY C
BLK/WHT
HOT IN RUN
FUSE 10 15A
HOT AT ALL TIMES
IN-LINE FUSE 20A
BLK/YEL
BLK
GRN/BLK
BLK/YEL
BLOWER MOTOR RELAY
BLK/WHT
BLK/WHT
BLU/WHT
WHT/RED
BLK/WHT
AIR COMPRESSOR CLUTCH
A/C RELAY E (W/DUAL A/C)
A/C RELAY D (W/DUAL A/C)
ENGINE COOLANT TEMPERATURE SWITCH
A/C PRESSURE SWITCH
BLU
BLK
BLK
BLK
BLU
BLK
BLU
BLK/WHT
THERMO SWITCH
BLOWER SWITCH
RED
BLU
BLU
SOLENOID
WHT/BLK
BLU/RED
BLU/YEL
HOT IN RUN
FUSE 10 15A
GRN/BLK
A/C SWITCH
BLU/BLK
BLU/WHT
BLK
BLU
BLU/WHT
CONDENSER FAN MOTOR
REAR BLOWER SWITCH
A/C RELAY B
BLK
BLOWER RESISTORS
BLU/RED
BLU/YEL
BLU/BLK
BLU/WHT
BLU/RED
GRN/BLK
BLK
BLU/RED
BLU/RED
GRN/BLK
BLU/RED
BLOWER MOTOR
REAR BLOWER MOTOR
REAR BLOWER RESISTORS
THERMO SWITCH
SUB CONDENSER FAN MOTOR (W/DUAL A/C)
BLK
BLK
BLU/BLK
BLK