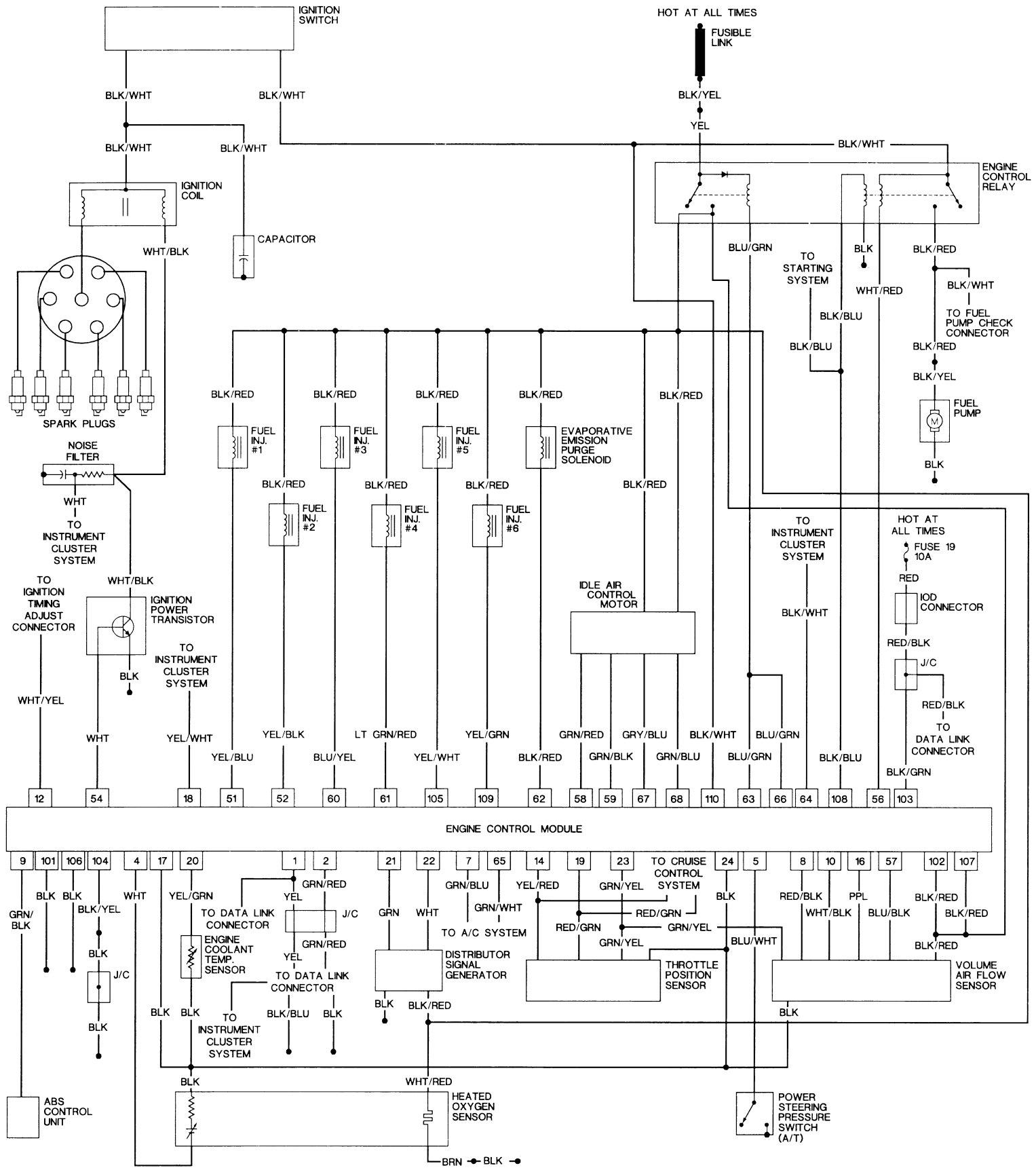
IGNITION SWITCH
HOT AT ALL TIMES
FUSIBLE LINK
BLK/WHT
BLK/WHT
BLK/YEL
YEL
BLK/WHT
BLK/WHT
BLK/WHT
ENGINE CONTROL RELAY
IGNITION COIL
CAPACITOR
WHT/BLK
BLU/GRN
TO STARTING SYSTEM
BLK
BLK/RED
WHT/RED
BLK/WHT
TO FUEL PUMP CHECK CONNECTOR
BLK/BLU
BLK/BLU
BLK/RED
BLK/YEL
FUEL PUMP
BLK
SPARK PLUGS
BLK/RED
BLK/RED
BLK/RED
BLK/RED
BLK/RED
FUEL INJ. #1
FUEL INJ. #3
FUEL INJ. #5
EVAPORATIVE EMISSION PURGE SOLENOID
NOISE FILTER
BLK/RED
BLK/RED
BLK/RED
BLK/RED
FUEL INJ. #2
FUEL INJ. #4
FUEL INJ. #6
WHT
TO INSTRUMENT CLUSTER SYSTEM
TO INSTRUMENT CLUSTER SYSTEM
HOT AT ALL TIMES
FUSE 19 10A
RED
TO IGNITION TIMING ADJUST CONNECTOR
WHT/BLK
IGNITION POWER TRANSISTOR
IDLE AIR CONTROL MOTOR
BLK/WHT
IOD CONNECTOR
RED/BLK
J/C
BLK
TO INSTRUMENT CLUSTER SYSTEM
WHT/YEL
RED/BLK
TO DATA LINK CONNECTOR
WHT
YEL/WHT
YEL/BLK
LT GRN/RED
YEL/GRN
GRN/RED
GRY/BLU
BLK/WHT
BLU/GRN
YEL/BLU
BLU/YEL
YEL/WHT
BLK/RED
GRN/BLK
GRN/BLU
BLU/GRN
BLK/BLU
BLK/GRN
12
54
18
51
52
60
61
105
109
62
58
59
67
68
110
63
66
64
108
56
103
ENGINE CONTROL MODULE
9
101
106
104
4
17
20
1
2
21
22
7
65
14
19
23
24
5
8
10
16
57
102
107
GRN/BLK
BLK
BLK
BLK/YEL
WHT
YEL/GRN
GRN/RED
YEL
TO DATA LINK CONNECTOR
J/C
GRN
WHT
GRN/BLU
GRN/WHT
YEL/RED
GRN/YEL
TO CRUISE CONTROL SYSTEM
BLK
RED/BLK
PPL
BLK/RED
BLK/RED
WHT/BLK
BLU/BLK
BLK/RED
RED/GRN
GRN/YEL
RED/GRN
GRN/YEL
BLU/WHT
BLK/RED
BLK
J/C
ENGINE COOLANT TEMP. SENSOR
GRN/RED
YEL
TO DATA LINK CONNECTOR
TO A/C SYSTEM
DISTRIBUTOR SIGNAL GENERATOR
THROTTLE POSITION SENSOR
VOLUME AIR FLOW SENSOR
BLK
BLK
BLK
TO INSTRUMENT CLUSTER SYSTEM
BLK/BLU
BLK
BLK
BLK/RED
BLK
BLK
WHT/RED
ABS CONTROL UNIT
HEATED OXYGEN SENSOR
POWER STEERING PRESSURE SWITCH (A/T)
BRN
BLK