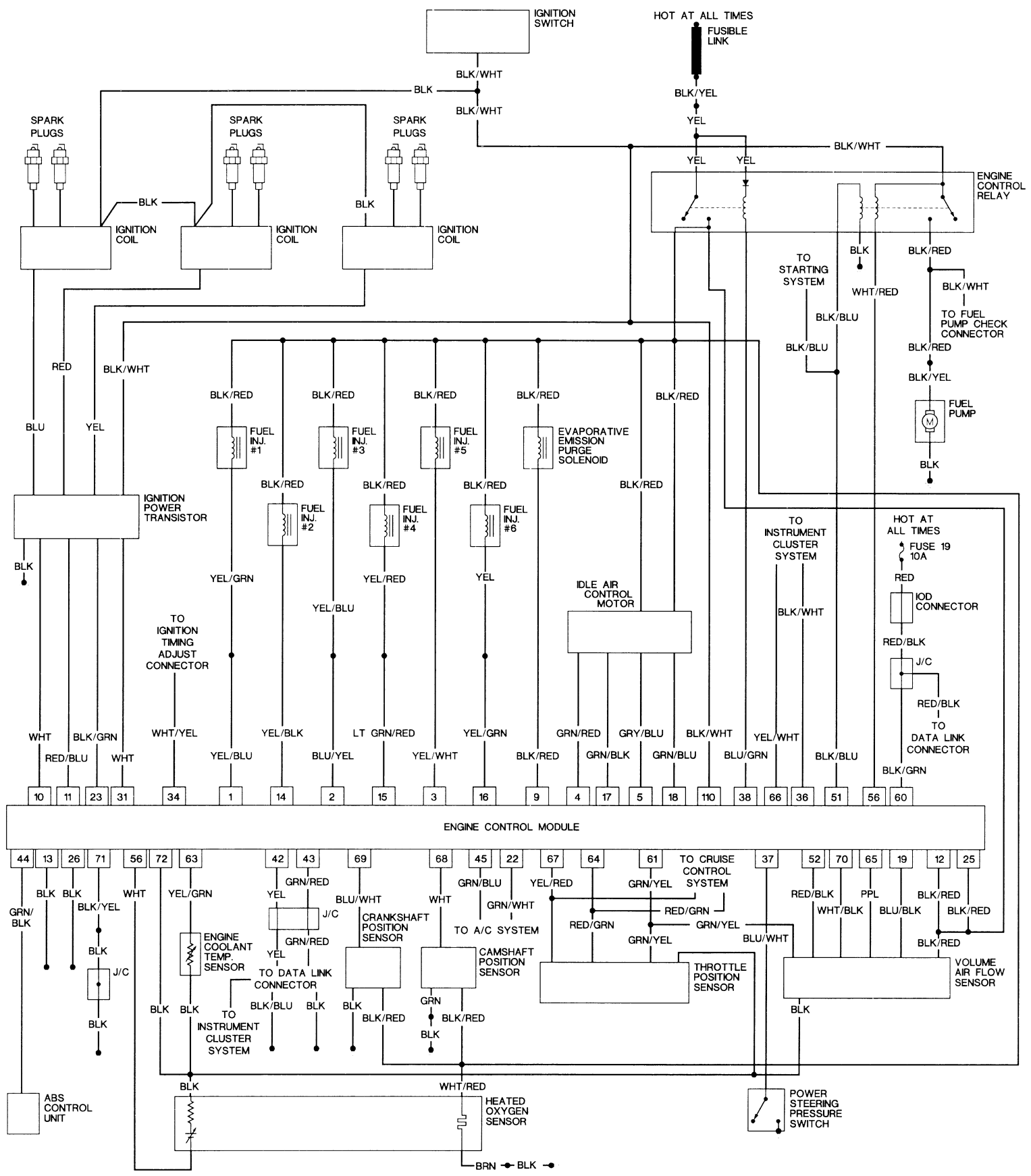
IGNITION SWITCH
HOT AT ALL TIMES
FUSIBLE LINK
BLK/WHT
BLK
BLK/WHT
BLK/YEL
YEL
BLK/WHT
YEL
YEL
ENGINE CONTROL RELAY
SPARK PLUGS
SPARK PLUGS
SPARK PLUGS
BLK
BLK
IGNITION COIL
IGNITION COIL
IGNITION COIL
TO STARTING SYSTEM
BLK
BLK/RED
WHT/RED
BLK/WHT
TO FUEL PUMP CHECK CONNECTOR
BLK/BLU
BLK/BLU
BLK/RED
BLK/YEL
FUEL PUMP
BLK
RED
BLK/WHT
BLU
YEL
BLK/RED
BLK/RED
BLK/RED
BLK/RED
BLK/RED
FUEL INJ. #1
FUEL INJ. #3
FUEL INJ. #5
EVAPORATIVE EMISSION PURGE SOLENOID
BLK/RED
BLK/RED
BLK/RED
BLK/RED
IGNITION POWER TRANSISTOR
FUEL INJ. #2
FUEL INJ. #4
FUEL INJ. #6
TO INSTRUMENT CLUSTER SYSTEM
HOT AT ALL TIMES
FUSE 19 10A
BLK
YEL/GRN
YEL/RED
YEL
IDLE AIR CONTROL MOTOR
RED
IOD CONNECTOR
YEL/BLU
BLK/WHT
TO IGNITION TIMING ADJUST CONNECTOR
RED/BLK
J/C
RED/BLK
TO DATA LINK CONNECTOR
WHT
BLK/GRN
WHT/YEL
YEL/BLK
LT GRN/RED
YEL/GRN
GRN/RED
GRY/BLU
BLK/WHT
YEL/WHT
RED/BLU
WHT
YEL/BLU
BLU/YEL
YEL/WHT
BLK/RED
GRN/BLK
GRN/BLU
BLU/GRN
BLK/BLU
BLK/GRN
10 11 23 31 34 1 14 2 15 3 16 9 4 17 5 18 110 38 66 36 51 56 60
ENGINE CONTROL MODULE
44 13 26 71 56 72 63 42 43 69 68 45 22 67 64 61 37 52 70 65 19 12 25
GRN/BLK
BLK
BLK
BLK/YEL
WHT
YEL/GRN
YEL
GRN/RED
J/C
BLU/WHT
WHT
GRN/BLU
GRN/WHT
YEL/RED
GRN/YEL
TO CRUISE CONTROL SYSTEM
RED/GRN
RED/GRN
GRN/YEL
GRN/YEL
BLU/WHT
RED/BLK
WHT/BLK
PPL
BLU/BLK
BLK/RED
BLK/RED
BLK/RED
BLK
J/C
BLK
ENGINE COOLANT TEMP. SENSOR
GRN/RED
YEL
TO DATA LINK CONNECTOR
CRANKSHAFT POSITION SENSOR
TO A/C SYSTEM
CAMSHAFT POSITION SENSOR
THROTTLE POSITION SENSOR
VOLUME AIR FLOW SENSOR
BLK
BLK
TO INSTRUMENT CLUSTER SYSTEM
BLK/BLU
BLK
BLK
BLK/RED
GRN
BLK/RED
BLK
BLK
ABS CONTROL UNIT
BLK
WHT/RED
HEATED OXYGEN SENSOR
POWER STEERING PRESSURE SWITCH
BRN
BLK