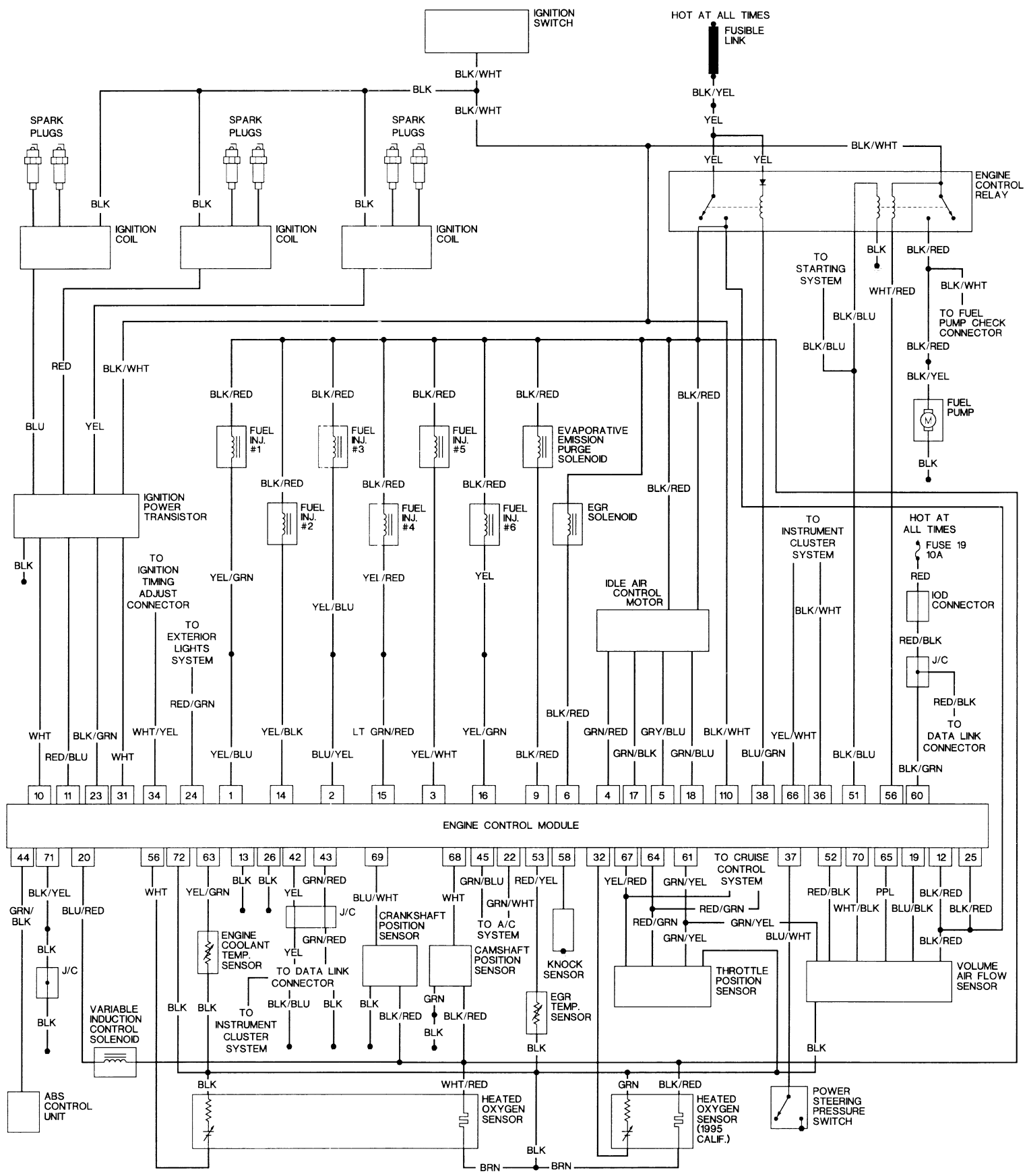
IGNITION SWITCH
HOT AT ALL TIMES
FUSIBLE LINK
BLK/WHT
BLK
BLK/WHT
BLK/YEL
YEL
BLK/WHT
YEL
YEL
SPARK PLUGS
SPARK PLUGS
SPARK PLUGS
ENGINE CONTROL RELAY
BLK
BLK
BLK
IGNITION COIL
IGNITION COIL
IGNITION COIL
TO STARTING SYSTEM
BLK
BLK/RED
WHT/RED
BLK/WHT
TO FUEL PUMP CHECK CONNECTOR
BLK/BLU
BLK/BLU
BLK/RED
BLK/YEL
FUEL PUMP
BLK
RED
BLK/WHT
BLU
YEL
BLK/RED
BLK/RED
BLK/RED
BLK/RED
BLK/RED
FUEL INJ. #1
FUEL INJ. #3
FUEL INJ. #5
EVAPORATIVE EMISSION PURGE SOLENOID
BLK/RED
BLK/RED
BLK/RED
BLK/RED
IGNITION POWER TRANSISTOR
FUEL INJ. #2
FUEL INJ. #4
FUEL INJ. #6
EGR SOLENOID
TO INSTRUMENT CLUSTER SYSTEM
HOT AT ALL TIMES
FUSE 19 10A
BLK
TO IGNITION TIMING ADJUST CONNECTOR
YEL/GRN
YEL/RED
YEL
YEL/BLU
IDLE AIR CONTROL MOTOR
RED
IOD CONNECTOR
BLK/WHT
TO EXTERIOR LIGHTS SYSTEM
RED/BLK
J/C
RED/GRN
BLK/RED
RED/BLK
TO DATA LINK CONNECTOR
WHT
BLK/GRN
WHT/YEL
YEL/BLK
LT GRN/RED
YEL/GRN
GRN/RED
GRY/BLU
BLK/WHT
YEL/WHT
RED/BLU
WHT
YEL/BLU
BLU/YEL
YEL/WHT
BLK/RED
GRN/BLK
GRN/BLU
BLU/GRN
BLK/BLU
BLK/GRN
10 11 23 31 34 24 1 14 2 15 3 16 9 6 4 17 5 18 110 38 66 36 51 56 60
ENGINE CONTROL MODULE
44 71 20 56 72 63 13 26 42 43 69 68 45 22 53 58 32 67 64 61 37 52 70 65 19 12 25
BLK/YEL
GRN/BLK
BLU/RED
WHT
YEL/GRN
BLK
BLK
GRN/RED
YEL
BLU/WHT
WHT
GRN/BLU
RED/YEL
GRN/WHT
YEL/RED
GRN/YEL
TO CRUISE CONTROL SYSTEM
RED/BLK
PPL
BLK/RED
WHT/BLK
BLU/BLK
BLK/RED
BLK
J/C
J/C
CRANKSHAFT POSITION SENSOR
TO A/C SYSTEM
RED/GRN
RED/GRN
GRN/YEL
GRN/YEL
BLU/WHT
BLK/RED
ENGINE COOLANT TEMP. SENSOR
GRN/RED
YEL
CAMSHAFT POSITION SENSOR
KNOCK SENSOR
THROTTLE POSITION SENSOR
VOLUME AIR FLOW SENSOR
TO DATA LINK CONNECTOR
BLK
VARIABLE INDUCTION CONTROL SOLENOID
BLK
BLK
TO INSTRUMENT CLUSTER SYSTEM
BLK/BLU
BLK
BLK
BLK/RED
GRN
BLK/RED
BLK
EGR TEMP. SENSOR
BLK
BLK
ABS CONTROL UNIT
BLK
WHT/RED
HEATED OXYGEN SENSOR
GRN
BLK/RED
HEATED OXYGEN SENSOR (1995 CALIF.)
POWER STEERING PRESSURE SWITCH
BLK
BRN
BRN