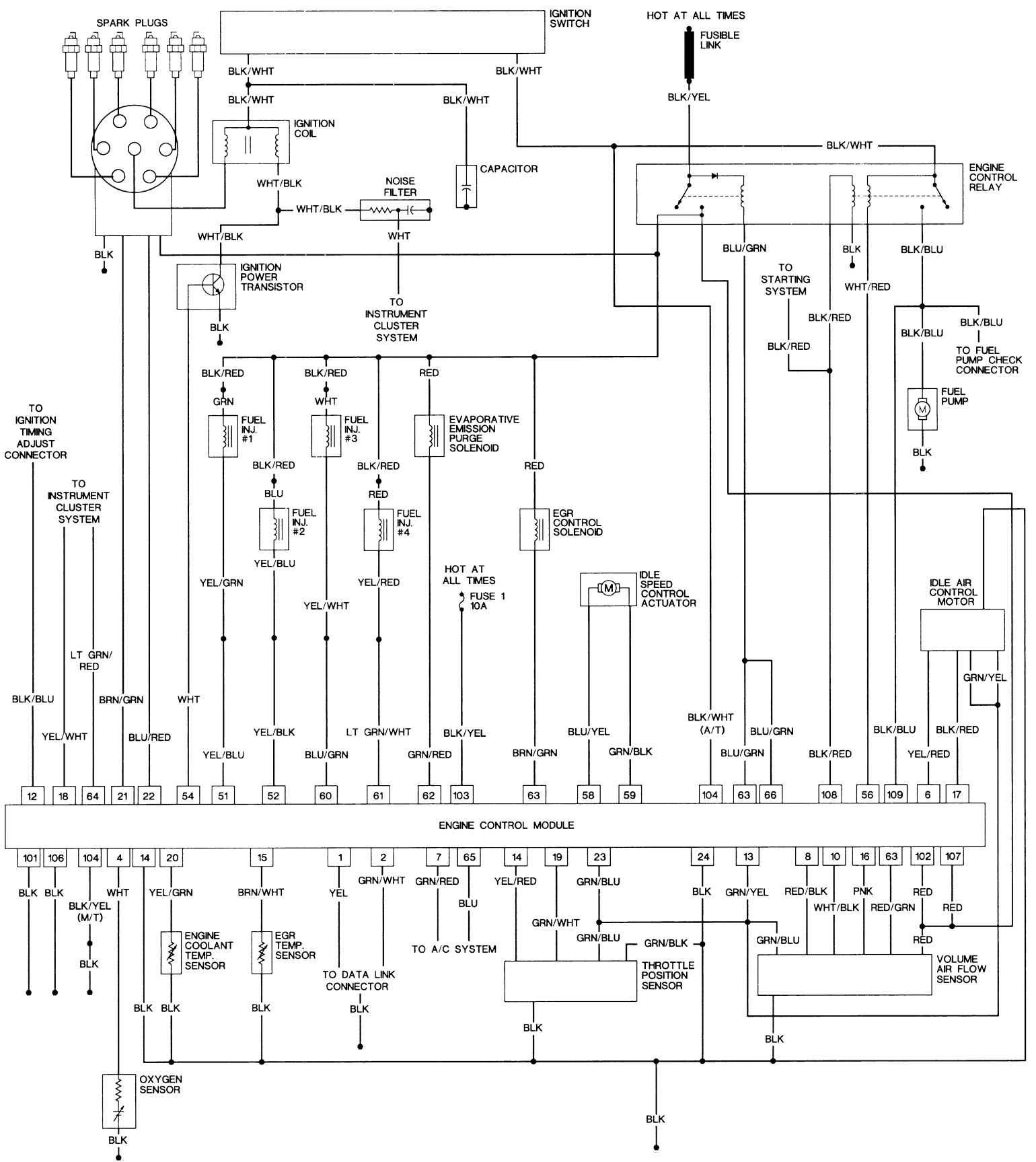
SPARK PLUGS
IGNITION SWITCH
HOT AT ALL TIMES
FUSIBLE LINK
BLK/WHT
BLK/WHT
BLK/WHT
BLK/WHT
BLK/YEL
IGNITION COIL
BLK/WHT
CAPACITOR
ENGINE CONTROL RELAY
WHT/BLK
NOISE FILTER
WHT/BLK
WHT/BLK
WHT
BLK
BLU/GRN
BLK
BLK/BLU
IGNITION POWER TRANSISTOR
TO STARTING SYSTEM
WHT/RED
BLK
TO INSTRUMENT CLUSTER SYSTEM
BLK/RED
BLK/BLU
BLK/BLU
BLK/RED
TO FUEL PUMP CHECK CONNECTOR
BLK/RED
BLK/RED
RED
GRN
WHT
FUEL INJ. #1
FUEL INJ. #3
EVAPORATIVE EMISSION PURGE SOLENOID
FUEL PUMP
BLK
TO IGNITION TIMING ADJUST CONNECTOR
BLK/RED
BLK/RED
RED
BLU
RED
TO INSTRUMENT CLUSTER SYSTEM
FUEL INJ. #2
FUEL INJ. #4
EGR CONTROL SOLENOID
YEL/BLU
HOT AT ALL TIMES
IDLE SPEED CONTROL ACTUATOR
IDLE AIR CONTROL MOTOR
YEL/GRN
YEL/RED
FUSE 1 10A
YEL/WHT
LT GRN/ RED
GRN/YEL
BLK/BLU
BRN/GRN
WHT
BLK/WHT (A/T)
BLU/GRN
BLK/BLU
BLK/RED
YEL/WHT
BLU/RED
YEL/BLK
LT GRN/WHT
BLK/YEL
BLU/YEL
YEL/BLU
BLU/GRN
GRN/RED
BRN/GRN
GRN/BLK
BLU/GRN
BLK/RED
YEL/RED
12
18
64
21
22
54
51
52
60
61
62
103
63
58
59
104
63
66
108
56
109
6
17
ENGINE CONTROL MODULE
101
106
104
4
14
20
15
1
2
7
65
14
19
23
24
13
8
10
16
63
102
107
BLK
BLK
BLK/YEL (M/T)
WHT
YEL/GRN
BRN/WHT
YEL
GRN/WHT
GRN/RED
BLU
YEL/RED
GRN/BLU
BLK
GRN/YEL
RED/BLK
WHT/BLK
PNK
RED/GRN
RED
RED
RED
GRN/WHT
GRN/BLU
GRN/BLK
GRN/BLU
BLK
ENGINE COOLANT TEMP. SENSOR
EGR TEMP. SENSOR
TO A/C SYSTEM
THROTTLE POSITION SENSOR
VOLUME AIR FLOW SENSOR
TO DATA LINK CONNECTOR
BLK
BLK
BLK
BLK
BLK
BLK
OXYGEN SENSOR
BLK
BLK