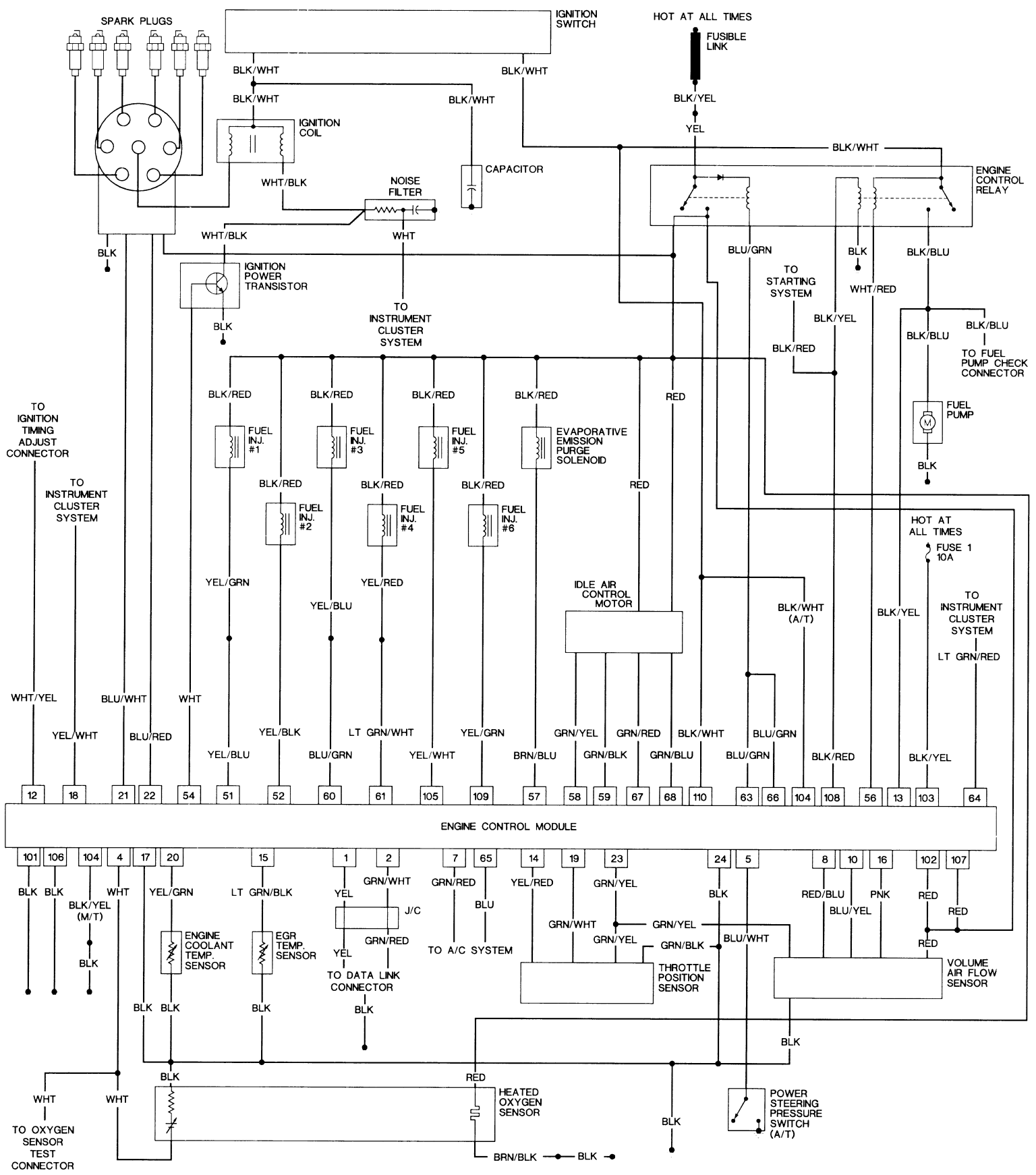
SPARK PLUGS
IGNITION SWITCH
HOT AT ALL TIMES
FUSIBLE LINK
BLK/WHT
BLK/WHT
BLK/WHT
BLK/WHT
BLK/YEL
YEL
IGNITION COIL
BLK/WHT
CAPACITOR
WHT/BLK
NOISE FILTER
ENGINE CONTROL RELAY
WHT/BLK
WHT
BLK
BLU/GRN
BLK
BLK/BLU
IGNITION POWER TRANSISTOR
TO STARTING SYSTEM
WHT/RED
BLK
TO INSTRUMENT CLUSTER SYSTEM
BLK/YEL
BLK/BLU
BLK/BLU
BLK/BLU
BLK/RED
TO FUEL PUMP CHECK CONNECTOR
BLK/RED
BLK/RED
BLK/RED
BLK/RED
RED
FUEL PUMP
TO IGNITION TIMING ADJUST CONNECTOR
FUEL INJ. #1
FUEL INJ. #3
FUEL INJ. #5
EVAPORATIVE EMISSION PURGE SOLENOID
BLK
TO INSTRUMENT CLUSTER SYSTEM
BLK/RED
BLK/RED
BLK/RED
RED
FUEL INJ. #2
FUEL INJ. #4
FUEL INJ. #6
HOT AT ALL TIMES
FUSE 1 10A
YEL/GRN
YEL/RED
YEL/BLU
IDLE AIR CONTROL MOTOR
BLK/WHT (A/T)
BLK/YEL
TO INSTRUMENT CLUSTER SYSTEM
LT GRN/RED
WHT/YEL
BLU/WHT
WHT
YEL/WHT
BLU/RED
YEL/BLK
LT GRN/WHT
YEL/GRN
GRN/YEL
GRN/RED
BLK/WHT
BLU/GRN
YEL/BLU
BLU/GRN
YEL/WHT
BRN/BLU
GRN/BLK
GRN/BLU
BLU/GRN
BLK/RED
BLK/YEL
12 18 21 22 54 51 52 60 61 105 109 57 58 59 67 68 110 63 66 104 108 56 13 103 64
ENGINE CONTROL MODULE
101 106 104 4 17 20 15 1 2 7 65 14 19 23 24 5 8 10 16 102 107
BLK
BLK
BLK/YEL (M/T)
WHT
YEL/GRN
LT GRN/BLK
YEL
GRN/WHT
GRN/RED
BLU
YEL/RED
GRN/YEL
BLK
RED/BLU
PNK
RED
BLU/YEL
RED
J/C
GRN/WHT
GRN/YEL
BLU/WHT
BLK
ENGINE COOLANT TEMP. SENSOR
EGR TEMP. SENSOR
YEL
GRN/RED
TO A/C SYSTEM
GRN/YEL
GRN/BLK
RED
THROTTLE POSITION SENSOR
VOLUME AIR FLOW SENSOR
TO DATA LINK CONNECTOR
BLK
BLK
BLK
BLK
BLK
BLK
RED
WHT
WHT
HEATED OXYGEN SENSOR
BLK
POWER STEERING PRESSURE SWITCH (A/T)
TO OXYGEN SENSOR TEST CONNECTOR
BRN/BLK
BLK