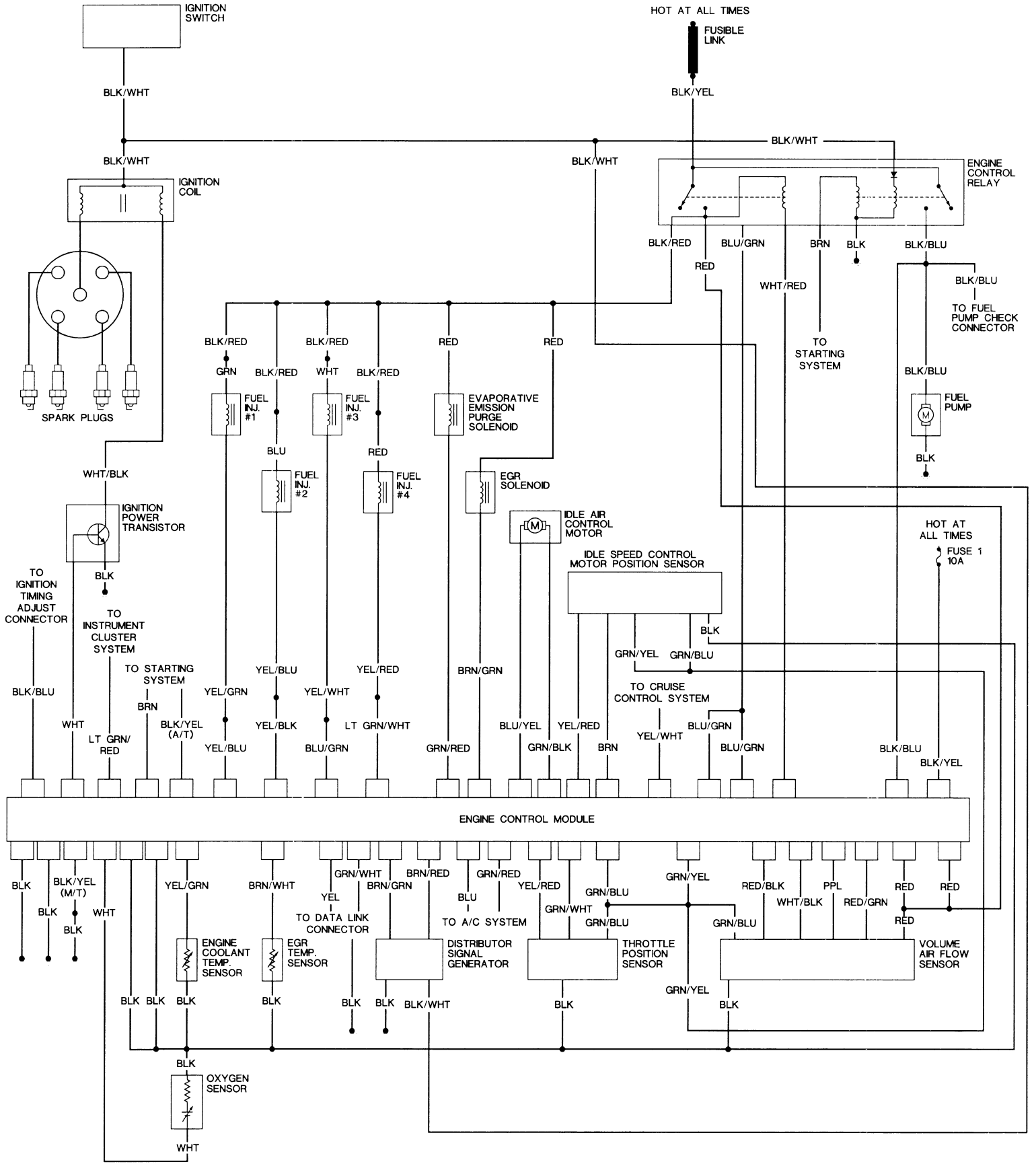
IGNITION SWITCH
HOT AT ALL TIMES
FUSIBLE LINK
BLK/WHT
BLK/YEL
BLK/WHT
BLK/WHT
BLK/WHT
IGNITION COIL
ENGINE CONTROL RELAY
BLK/RED
BLU/GRN
BRN
BLK
BLK/BLU
RED
WHT/RED
BLK/BLU
TO FUEL PUMP CHECK CONNECTOR
TO STARTING SYSTEM
BLK/BLU
FUEL PUMP
BLK
SPARK PLUGS
BLK/RED
GRN
BLK/RED
WHT
BLK/RED
RED
RED
FUEL INJ. #1
FUEL INJ. #3
EVAPORATIVE EMISSION PURGE SOLENOID
BLU
RED
FUEL INJ. #2
FUEL INJ. #4
EGR SOLENOID
WHT/BLK
IGNITION POWER TRANSISTOR
BLK
IDLE AIR CONTROL MOTOR
HOT AT ALL TIMES
FUSE 1 10A
IDLE SPEED CONTROL MOTOR POSITION SENSOR
TO IGNITION TIMING ADJUST CONNECTOR
TO INSTRUMENT CLUSTER SYSTEM
BLK
GRN/YEL
GRN/BLU
TO STARTING SYSTEM
YEL/BLU
YEL/RED
BRN/GRN
TO CRUISE CONTROL SYSTEM
BLK/BLU
YEL/GRN
YEL/WHT
BRN
WHT
BLK/YEL (A/T)
YEL/BLK
LT GRN/WHT
BLU/YEL
YEL/RED
BLU/GRN
LT GRN/ RED
YEL/BLU
BLU/GRN
GRN/RED
GRN/BLK
BRN
YEL/WHT
BLU/GRN
BLK/BLU
BLK/YEL
ENGINE CONTROL MODULE
BLK
BLK/YEL (M/T)
YEL/GRN
BRN/WHT
GRN/WHT
BRN/RED
GRN/RED
YEL/RED
GRN/YEL
RED/BLK
PPL
RED
RED
BLK
WHT
YEL
BRN/GRN
BLU
GRN/BLU
WHT/BLK
RED/GRN
BLK
TO DATA LINK CONNECTOR
TO A/C SYSTEM
GRN/WHT
GRN/BLU
GRN/BLU
RED
ENGINE COOLANT TEMP. SENSOR
EGR TEMP. SENSOR
DISTRIBUTOR SIGNAL GENERATOR
THROTTLE POSITION SENSOR
VOLUME AIR FLOW SENSOR
BLK BLK BLK
BLK
BLK BLK BLK/WHT
BLK
GRN/YEL
BLK
BLK
OXYGEN SENSOR
WHT