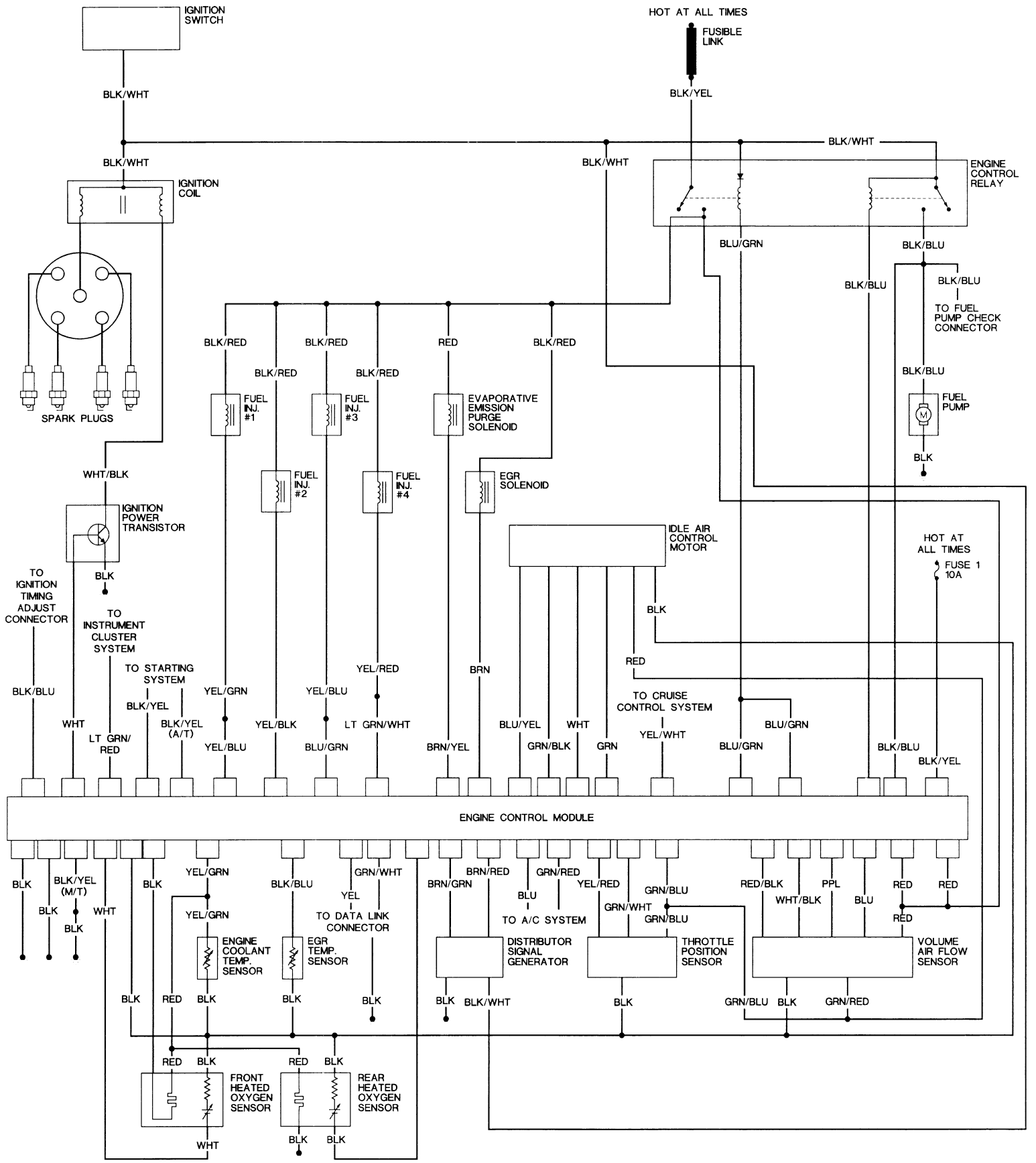
IGNITION SWITCH
HOT AT ALL TIMES
FUSIBLE LINK
BLK/WHT
BLK/YEL
BLK/WHT
BLK/WHT
BLK/WHT
BLK/WHT
ENGINE CONTROL RELAY
IGNITION COIL
BLU/GRN
BLK/BLU
BLK/BLU
BLK/BLU
TO FUEL PUMP CHECK CONNECTOR
BLK/BLU
SPARK PLUGS
BLK/RED
BLK/RED
RED
BLK/RED
BLK/RED
BLK/RED
FUEL INJ. #1
FUEL INJ. #3
EVAPORATIVE EMISSION PURGE SOLENOID
FUEL PUMP
BLK
WHT/BLK
FUEL INJ. #2
FUEL INJ. #4
EGR SOLENOID
IGNITION POWER TRANSISTOR
IDLE AIR CONTROL MOTOR
HOT AT ALL TIMES
FUSE 1 10A
BLK
TO IGNITION TIMING ADJUST CONNECTOR
TO INSTRUMENT CLUSTER SYSTEM
BLK
RED
TO STARTING SYSTEM
YEL/RED
BRN
BLK/BLU
YEL/GRN
YEL/BLU
BLK/YEL
TO CRUISE CONTROL SYSTEM
WHT
BLK/YEL (A/T)
YEL/BLK
LT GRN/WHT
BLU/YEL
WHT
BLU/GRN
LT GRN/RED
YEL/BLU
BLU/GRN
BRN/YEL
GRN/BLK
GRN
YEL/WHT
BLU/GRN
BLK/BLU
BLK/YEL
ENGINE CONTROL MODULE
BLK
BLK/YEL (M/T)
BLK
YEL/GRN
BLK/BLU
GRN/WHT
BRN/RED
GRN/RED
YEL/RED
GRN/BLU
RED/BLK
PPL
RED
RED
BLK
WHT
YEL
BRN/GRN
BLU
GRN/WHT
WHT/BLK
BLU
BLK
YEL/GRN
TO DATA LINK CONNECTOR
TO A/C SYSTEM
GRN/BLU
RED
ENGINE COOLANT TEMP. SENSOR
EGR TEMP. SENSOR
DISTRIBUTOR SIGNAL GENERATOR
THROTTLE POSITION SENSOR
VOLUME AIR FLOW SENSOR
BLK
RED
BLK
BLK
BLK
BLK
BLK/WHT
BLK
GRN/BLU
BLK
GRN/RED
RED
BLK
RED
BLK
FRONT HEATED OXYGEN SENSOR
REAR HEATED OXYGEN SENSOR
WHT
BLK
BLK