WIRING DIAGRAMS

Fig. 5: Fuse Link Box, Rad Fan Motor, Fog Lights (Grid 16-19)

1991 Mitsubishi Galant

For DIAKOM-AUTO http://www.diakom.ru Taganrog support@diakom.ru (8634)315187
Copyright © 1998 Mitchell Repair Information Company, LLC
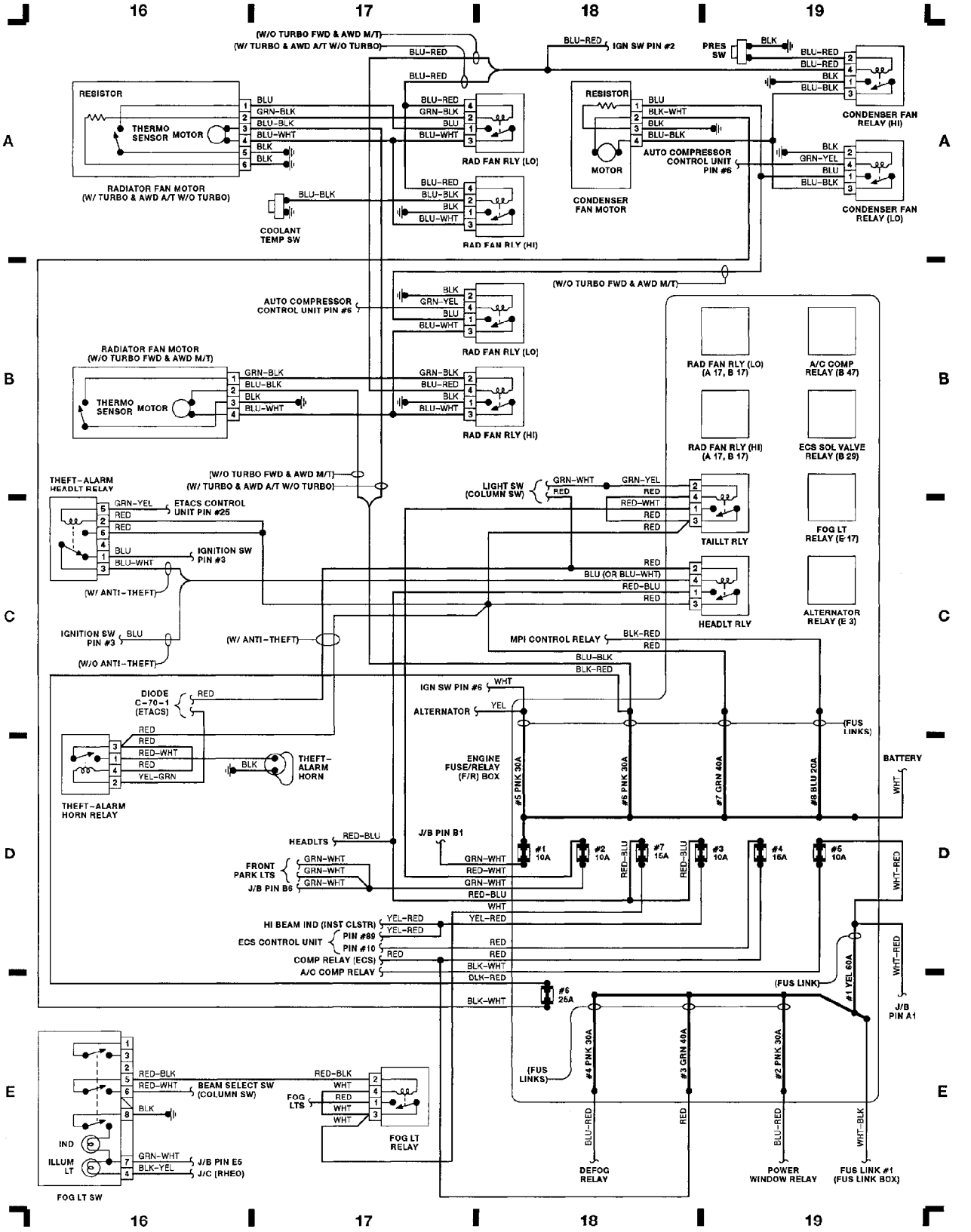
Sunday, December 17, 2000 03:09PM