WIRING DIAGRAMS

Fig. 15: Motor Position Sensor & Idle Sw. Ckt

1991 Mitsubishi Galant

For DIAKOM-AUTO http://www.diakom.ru Taganrog support@diakom.ru (8634)315187

Copyright © 1998 Mitchell Repair Information Company, LLC
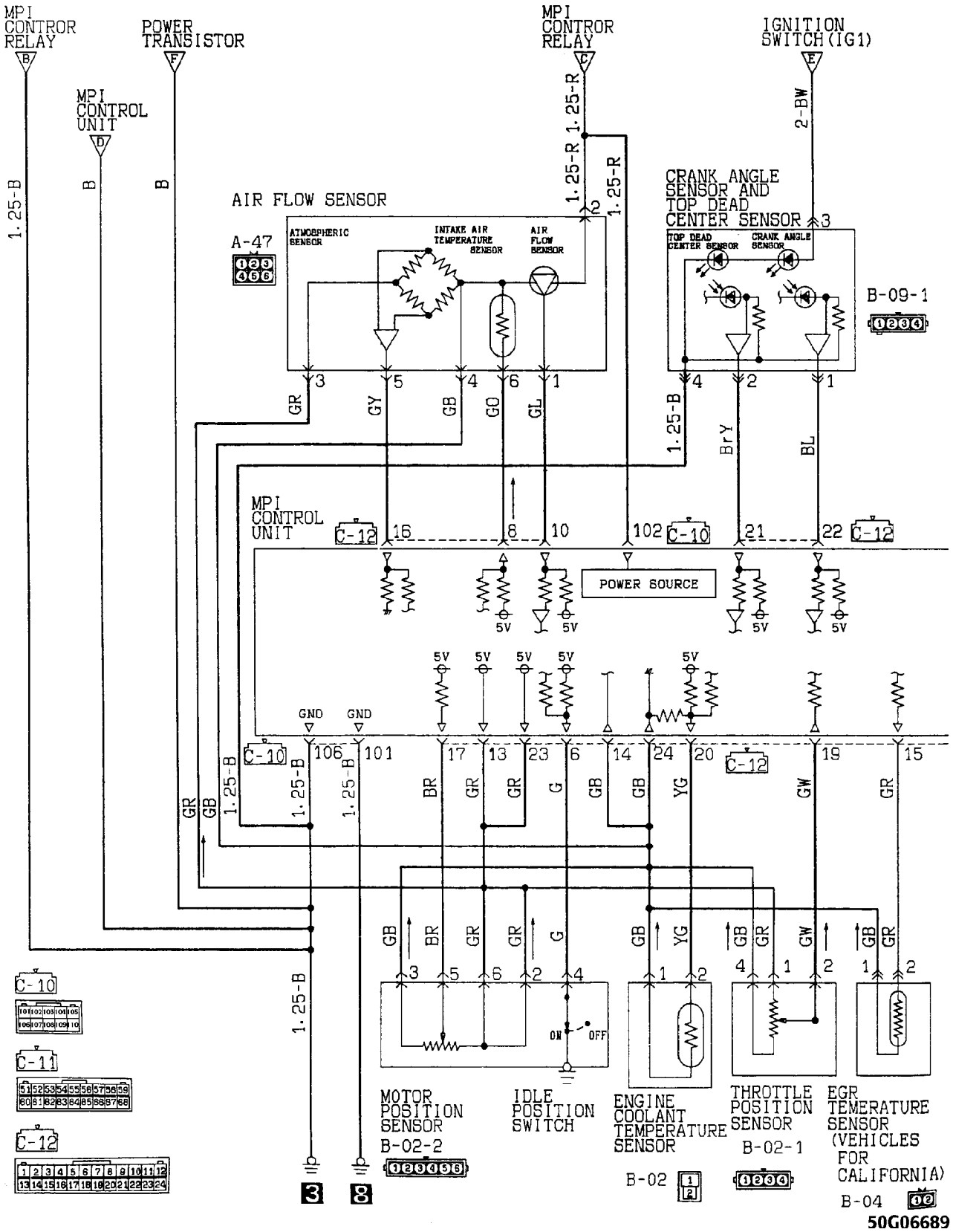
Sunday, December 17, 2000 03:11PM