SYSTEM WIRING DIAGRAMS
Courtesy Lamps Circuit, W/ ETACS-ECU

1997 Mitsubishi Galant

For DIAKOM-AUTO http://www.diakom.ru Taganrog support@diakom.ru (8634)315187

Copyright © 1998 Mitchell Repair Information Company, LLC
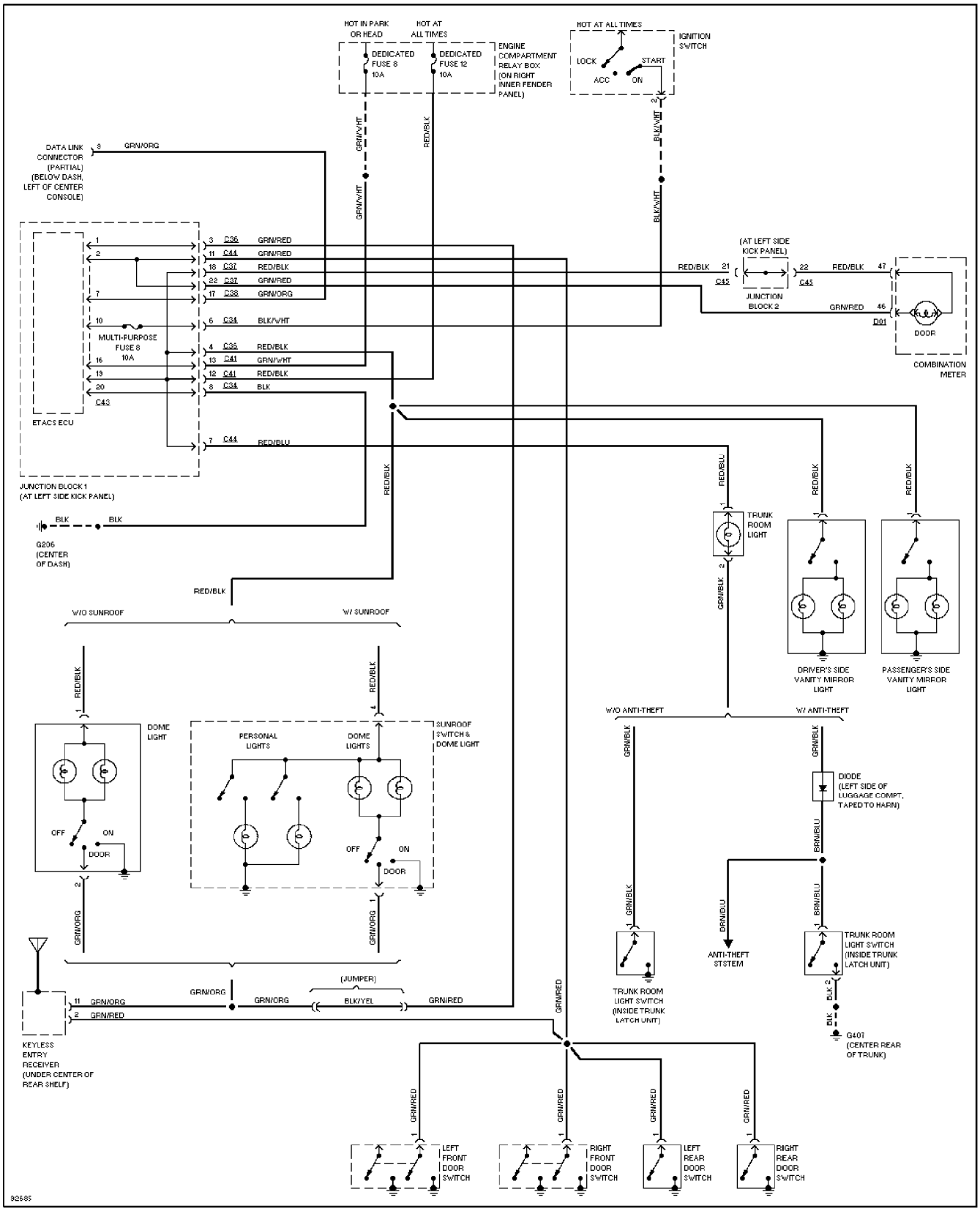
Thursday, December 14, 2000 04:59PM