NISSAN

MODEL SD SERIES
DIESEL ENGINE
SD22, SD23, SD25 & SD33

SERVICE MANUAL
2nd Revision

NISSAN

HOW TO USE THIS MANUAL

- This Service Manual is designed as a guide for servicing SD series diesel engines for vehicles.
- A QUICK REFERENCE INDEX is provided on the first page. Refer to this index along with the index of the particular section you wish to consult.
- The first page of each section lists the contents and gives the page numbers for the respective topics.
- SERVICE DATA AND SPECIFICATIONS are contained in each section.
- TROUBLE DIAGNOSES AND CORRECTIONS are included in MA section. This feature of the manual lists the likely causes of trouble and recommends the appropriate corrective actions to be taken.
- A list of SPECIAL SERVICE TOOLS is included in each section. The special service tools are designed to assist you in performing repair safely, accurately and quickly.
- The measurements given in this manual are primarily expressed with the SI unit (International System of Unit), and alternately expressed in the metric system and in the yard/pound system.
- In the text, the following abbreviations are used:

S D S	Service Data and Specifications	L.H.:	Left Hand
Ⓣ	Tightening Torque	R.H.:	Right Hand

- The captions CAUTION and WARNING warn you of steps that must be followed to prevent personal injury and/or damage to some part of the engine.

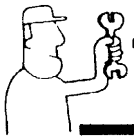

IMPORTANT SAFETY NOTICE

The proper performance of service is essential for both the safety of the mechanic and the efficient functioning of the engine.
The service methods in this Service Manual are described in such a manner that the service may be performed safely and accurately.
Special service tools have been designed to permit safe and proper performance of service. Be sure to use them.

Service varies with the procedures used, the skills of the mechanic and the tools and parts available. Accordingly, anyone using service procedures, tools or parts which are not specifically recommended by NISSAN must first completely satisfy himself that neither his safety nor the engine's safety will be jeopardized by the service method selected.

GENERAL INFORMATION

GI

SECTION GI

CONTENTS

SPECIFICATIONS GI-2
Table of model and corresponding engine GI-2
ENGINE SERIAL NUMBER LOCATION . . GI-3
TIGHTENING TORQUE OF STANDARD BOLT GI-4

SPECIFICATIONS

Engine model		SD22	SD23	SD25		SD33
Cylinder arrangement		In-line				
Number of cylinders		4				6
Valve arrangement		O.H.V.				
Bore x Stroke	mm (in)	83 x 100 (3.27 x 3.94)	89 x 92 (3.50 x 3.62)	89 x 100 (3.50 x 3.94)		83 x 100 (3.27 x 3.94)
Displacement	cm^3 (cu in)	2,164 (132.05)	2,289 (139.67)	2,488 (151.82)		3,246 (198.07)
Firing order		1-3-4-2				1-4-2-6-3-5
Number of piston rings	Compression	3	2			3
	Oil	2	1			2
Number of main bearings		3	5			4
Compression ratio		20.8	20.5	20.7	21.4 *1	20.8
Cetane number of diesel fuel		More than 45				

*1: Only for 720 model

TABLE OF MODEL AND CORRESPONDING ENGINE

Model	Engine	Injection pump type	Remarks
430	SD22	DIESEL KIKI-BOSCH in-line	*2
160	SD33 & T	DIESEL KIKI-BOSCH in-line	
H40	SD25	DIESEL KIKI-BOSCH in-line	
		DIESEL KIKI-BOSCH VE	
W40	SD25	DIESEL KIKI-BOSCH in-line	Only for Hong Kong
		DIESEL KIKI-BOSCH VE	
140	SD22	DIESEL KIKI-BOSCH in-line	*2
F22	SD22	C.A.V.-D.P.A.	Only for Taiwan
	SD25	DIESEL KIKI-BOSCH in-line	
		DIESEL KIKI-BOSCH VE	Only for Europe and Australia
	SD23	DIESEL KIKI-BOSCH in-line	
E23	SD22	DIESEL KIKI-BOSCH VE	*2
	SD23	DIESEL KIKI-BOSCH VE	
720	SD22	DIESEL KIKI-BOSCH in-line	*2
	SD23	DIESEL KIKI-BOSCH in-line	
		DIESEL KIKI-BOSCH VE	Only for Europe and Australia
	SD25	DIESEL KIKI-BOSCH in-line	
		DIESEL KIKI-BOSCH VE	Only for Europe and Australia

*2: There are a few different kinds of SD22 engines with respect to the number of piston rings and main bearings. When you are not sure of the number of piston rings or main bearings of a particular SD22 engine, refer to the table below.

	Number of	Applied SD22 engine number			
430	Piston rings	5 rings	3 rings	SD22-743434 ~ (only for Hong Kong) / SD22-754092 ~ (for other countries)	5 rings
	Main bearings	3 bearings	SD22-618766 ~	5 bearings	
140	Piston rings	5 rings			
	Main bearings	3 bearings			
E23	Piston rings	5 rings		SD22-557447 ~	3 rings
	Main bearings	3 bearings			
720	Piston rings	5 rings		SD22-703539 ~	3 rings
	Main bearing	3 bearings			5 bearings

ENGINE SERIAL NUMBER LOCATION

The engine number is stamped on the right side of the cylinder block.

SDXX XXXXXX

Serial No.

Engine model

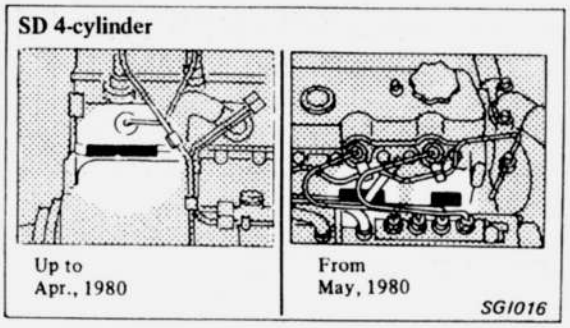

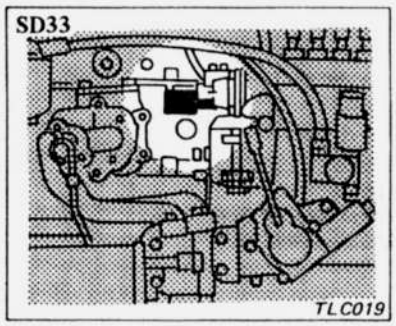

TIGHTENING TORQUE OF STANDARD BOLT

Grade	Nominal size	Diameter mm	Pitch mm	Tightening torque		
				N·m	kg·m	ft·lb
4T	M6	6.0	1.0	3 - 4	0.3 - 0.4	2.2 - 2.9
	M8	8.0	1.25	8 - 11	0.8 - 1.1	5.8 - 8.0
			1.0	8 - 11	0.8 - 1.1	5.8 - 8.0
	M10	10.0	1.5	16 - 22	1.6 - 2.2	12 - 16
			1.25	16 - 22	1.6 - 2.2	12 - 16
	M12	12.0	1.75	26 - 36	2.7 - 3.7	20 - 27
			1.25	30 - 40	3.1 - 4.1	22 - 30
	M14	14.0	1.5	46 - 62	4.7 - 6.3	34 - 46
7T	M6	6.0	1.0	6 - 7	0.6 - 0.7	4.3 - 5.1
	M8	8.0	1.25	14 - 18	1.4 - 1.8	10 - 13
			1.0	14 - 18	1.4 - 1.8	10 - 13
	M10	10.0	1.5	25 - 35	2.6 - 3.6	19 - 26
			1.25	26 - 36	2.7 - 3.7	20 - 27
	M12	12.0	1.75	45 - 61	4.6 - 6.2	33 - 45
			1.25	50 - 68	5.1 - 6.9	37 - 50
	M14	14.0	1.5	76 - 103	7.7 - 10.5	56 - 76
9T	M6	6.0	1.0	8 - 11	0.8 - 1.1	5.8 - 8.0
	M8	8.0	1.25	19 - 25	1.9 - 2.5	14 - 18
			1.0	20 - 27	2.0 - 2.8	14 - 20
	M10	10.0	1.5	36 - 50	3.7 - 5.1	27 - 37
			1.25	39 - 51	4.0 - 5.2	29 - 38
	M12	12.0	1.75	65 - 88	6.6 - 9.0	48 - 65
			1.25	72 - 97	7.3 - 9.9	53 - 72
	M14	14.0	1.5	109 - 147	11.1 - 15.0	80 - 108

1. **Special parts are excluded.**
2. **This standard is applicable to bolts having the following marks embossed on the bolt head.**

Grade	Mark
4T	4
7T	7
9T	9

MAINTENANCE

SECTION MA

MA

CONTENTS

BASIC MECHANICAL SYSTEM ..... MA- 2
Retightening cylinder head bolts, manifold nuts and venturi nuts ..... MA- 2
Adjusting intake and exhaust valve clearance ..... MA- 2
Checking and adjusting drive belt ..... MA- 3
Checking engine compression pressure .. MA- 4
INJECTION AND FUEL SYSTEM ..... MA- 5
Checking and adjusting injection timing ..... MA- 5
Idle and maximum speed adjustment ... MA- 5
Injection nozzle ..... MA- 8
Cleaning and replacing air cleaner filter ..... MA- 8
Checking fuel filter, draining water and replacing filter ..... MA- 9
Checking fuel lines (Hoses, piping, connectors, etc.) MA-10
Checking rubber hoses (Water, air vacuum and oil hoses, etc.) MA-10
COOLING AND LUBRICATION SYSTEM MA-11
Changing engine coolant MA-11
Checking cooling system hoses and connections for leaks MA-11
Changing engine oil and oil filter MA-11
Checking engine oil for leaks MA-12
Checking and changing injection pump oil (Lubrication type only) MA-12
Lubricating injection pump governor diaphragm MA-13
ELECTRICAL SYSTEM MA-13
Checking glow plugs MA-13
SERVICE DATA AND SPECIFICATIONS MA-14
Inspection and adjustment MA-14
Tightening torque MA-14
TROUBLE DIAGNOSES AND CORRECTIONS MA-15
SPECIAL SERVICE TOOLS MA-29

BASIC MECHANICAL SYSTEM

RETIGHTENING CYLINDER HEAD BOLTS, MANIFOLD NUTS AND VENTURI NUTS

CYLINDER HEAD BOLTS

1. Run engine until coolant temperature indicator points to the middle of gauge, then stop engine.
2. Remove valve rocker cover.
3. Tighten cylinder head bolts according to the order shown in the figure, starting with the center and moving toward the ends.

Ⓣ : Cylinder head bolts
Main bolts (○):
118 - 127 N·m
(12 - 13 kg-m,
87 - 94 ft-lb)
Sub bolts (□):
44 - 54 N·m
(4.5 - 5.5 kg-m,
33 - 40 ft-lb)

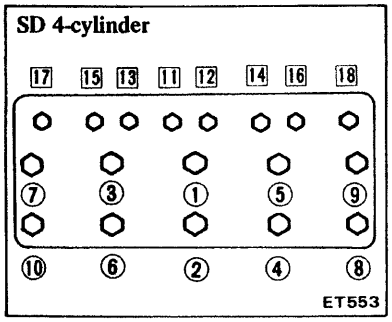

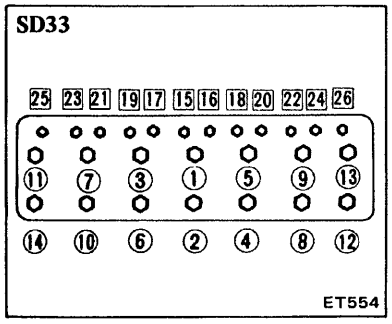

When tightening main bolts (near the rocker shaft side), be sure to use Tool.

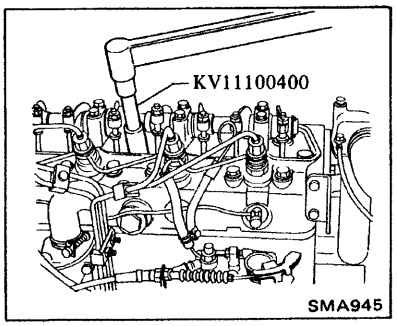

4. Install valve rocker cover.

MANIFOLD AND EXHAUST TUBE NUTS

WARNING:
Do not check the exhaust system until it has cooled off. Otherwise, you may burn yourself.

Ⓣ : Intake & Exhaust manifold nuts
15 - 18 N·m
(1.5 - 1.8 kg-m,
11 - 13 ft-lb)

For the exhaust tube nuts' tightening torque specifications, refer to Section EF of the applicable Service Manual.

VENTURI NUTS

Leaks at this area may cause rough idle, surging, deceleration, popping or whistle.

Ⓣ : Venturi nuts
3 - 4 N·m
(0.3 - 0.4 kg-m,
2.2 - 2.9 ft-lb)

ADJUSTING INTAKE AND EXHAUST VALVE CLEARANCE

a. Adjustment should be made while engine is hot.
b. Adjustment cannot be made while engine is in operation.

To adjust, proceed as follows:
1. Remove valve rocker cover.
2. Set No. 1 piston to Top Dead Center on compression stroke.
3. Adjust clearances of ①, ②, ③ and ⑤ valves.

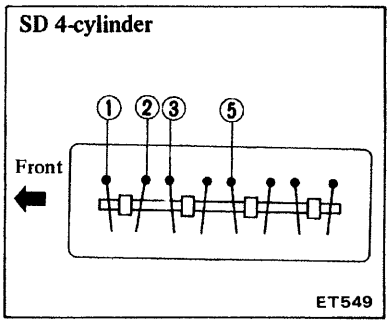

Adjust clearances of valves ①, ②, ④, ⑥, ⑧ and ⑩.

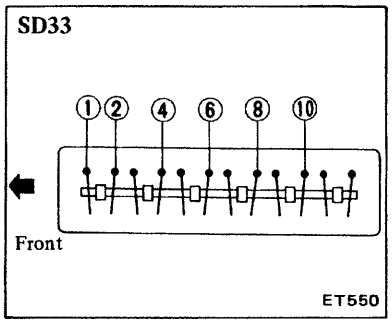

Valve clearance (Hot):
Intake
SD 4-cylinder – ② ③
SD33 – ② ⑥ ⑩
0.35 mm (0.014 in)
Exhaust
SD 4-cylinder – ① ⑤
SD33 – ① ④ ⑧
0.35 mm (0.014 in)

(1) Using feeler gauge, measure clearance between rocker arm and valve head.

Feeler gauge should move with a very slight drag.

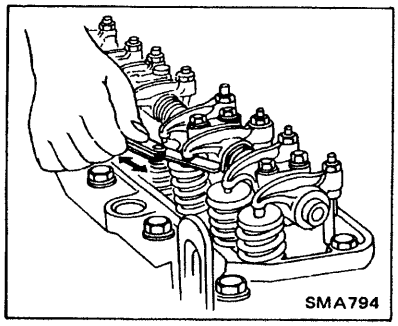

(2) If clearance is not the specified value, loosen rocker arm nut and turn rocker arm screw to provide proper clearance.

(3) Hold rocker arm screw and tighten rocker arm nut.

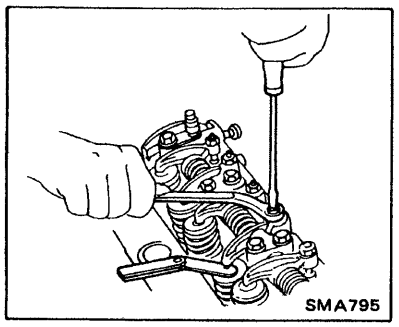

(4) Recheck clearance.

4. Bring No. 4 piston (SD 4-cylinder) or No. 6 piston (SD33) to Top Dead Center on compression stroke.

5. Adjust clearances of ④, ⑥, ⑦ and ⑧ valves.

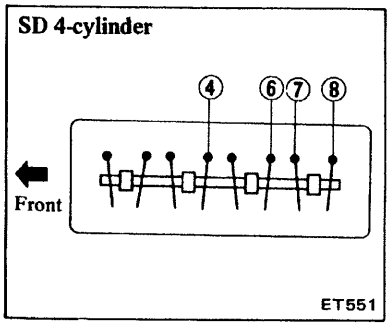

Adjust clearances of valves ③, ⑤, ⑦, ⑨, ⑪ and ⑫.

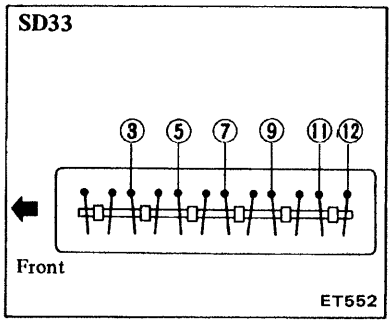

Valve clearance (Hot):
Intake
SD 4-cylinder – ⑥ ⑦
SD33 – ③ ⑦ ⑪
0.35 mm (0.014 in)
Exhaust
SD 4-cylinder – ④ ⑧
SD33 – ⑤ ⑨ ⑫
0.35 mm (0.014 in)

6. Install valve rocker cover.

CHECKING AND ADJUSTING DRIVE BELT

1. Visually inspect for cracks or damage.

The belts should not touch the bottom of the pulley groove.

2. Check belt tension by pushing.

The belts should deflect by the specified amount.

Drive belt deflection:
8 - 12 mm
(0.31 - 0.47 in)
Applied pressing force:
98 N (10 kg, 22 lb)

3. Adjust belt tension as follows:

FAN BELT

1. Loosen upper and lower alternator securing bolts until alternator can be moved slightly.

2. Move alternator with a prying bar until belt tension is within the specified range.

Then tighten bolts securely.

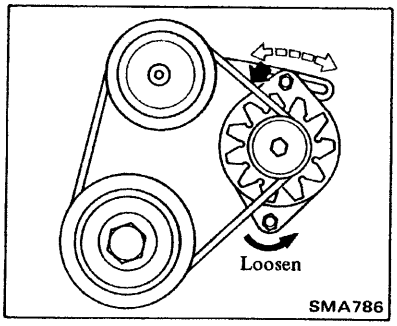

AIR CONDITIONER COMPRESSOR BELT

1. Loosen idler pulley lock nut.

2. Turn idler pulley adjusting bolt in either direction until air conditioner compressor belts' tension is within the specified range.

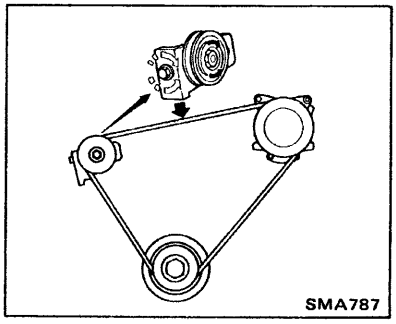

3. Tighten idler pulley lock nut.

POWER STEERING PUMP BELT

1. Loosen pump fixing bolt and adjusting bar bolt.

2. Move pump until fan belt tension is within the specified range.

Then tighten pump fixing bolt and adjusting bar bolt.

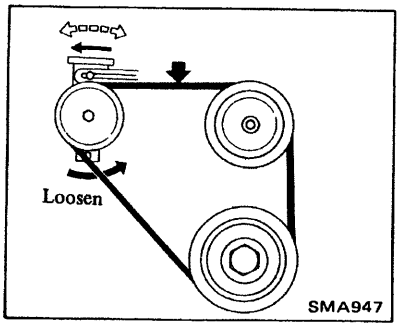

CHECKING ENGINE COMPRESSION PRESSURE

1. Warm up engine.
2. Remove following parts:
- Injection tube on nozzle side
- Spill tube assembly.

When removing spill tube, hold nut and nozzle to prevent it from breaking.

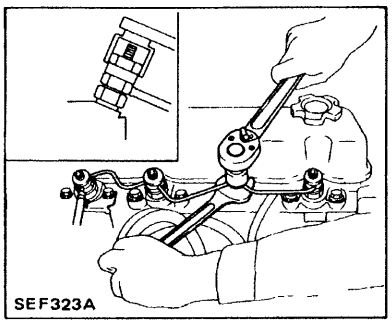

- Nozzle assemblies

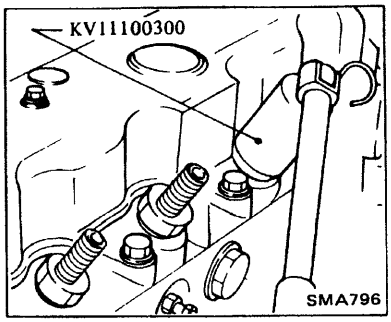

- Nozzle gaskets

3. Fit compression gauge adapter to cylinder head. Make sure bleeder of gauge is closed.

Ⓣ : Compression gauge adpater
76 - 78 N·m
(7.7 - 8.0 kg-m,
56 - 58 ft-lb)

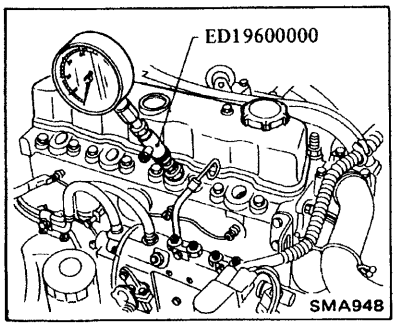

4. Set no fuel injected condition.
- In-line type

(1) For model equipped with injection pump controller

a. Disconnect harness connector between injection pump control unit (D.P.C.) and injection pump controller.

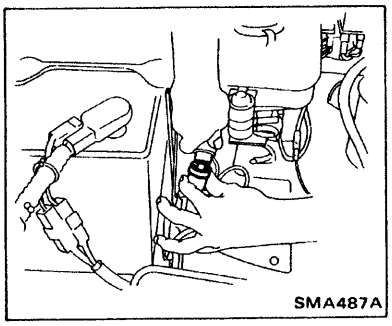

b. Confirm that injection pump control lever stays in the stop position.

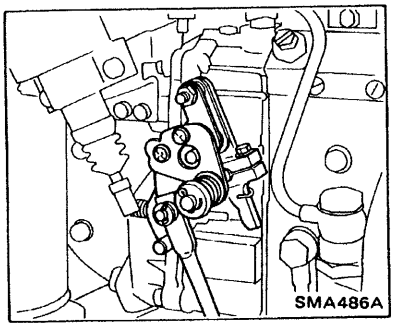

(2) For model not equipped with injection pump controller

Set control lever of injection pump at zero injection.

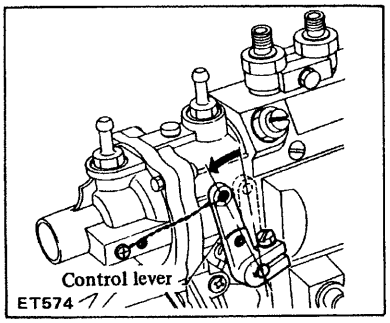

- VE and C.A.V.-D.P.A. type

Disconnect or remove fuel cut solenoid wire.

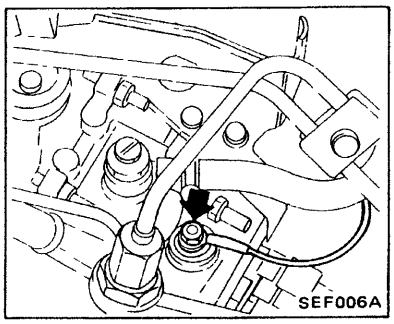

5. Depress accelerator pedal fully and crank engine, then read gauge indication.
- Engine compression measurement should be made as quickly as possible.

Compression pressure:

Unit: kPa (bar, kg/cm^2, psi)/200 rpm

Standard	2,942 (29.4, 30, 427)
Minimum	2,452 (24.5, 25, 356)
Differential limit between cylinders	294 (2.9, 3, 43)

6. Remove compression gauge adapter and push bleeder. Make sure that bleeder is closed before attempting to check another cylinder.

If cylinder compression in one or more cylinders is low, pour a small quantity of engine oil into cylinders through the nozzle holes and retest compression.

- If adding oil helps the compression pressure, chances are that piston rings are worn or damaged.
- If pressure stays low, valve may be sticking or seating improperly.
- If cylinder compression in any two adjacent cylinders is low, and if adding oil does not help the compression, there is leakage past the gasketed surface.
  Oil and water in combustion chambers can result from this problem.

7. Install following parts:
- Nozzle gaskets

When installing the small nozzle gasket (for SD23, SD25 only) the installation direction is as follows.

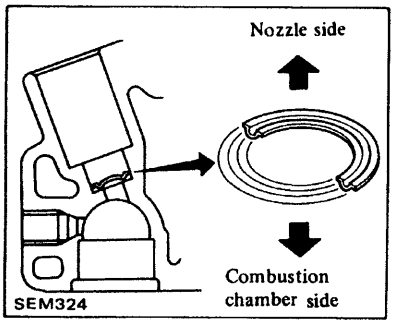

- Nozzle assemblies
- Spill tube assembly
- Injection tube

8. Bleed air from fuel system. Refer to BLEEDING FUEL SYSTEM in section EF.

INJECTION AND FUEL SYSTEM

CHECKING AND ADJUSTING INJECTION TIMING

CHECKING

Check alignment marks on pump and engine front plate. Align these if necessary or check initial injection timing.
Refer to section EF for adjusting initial timing.

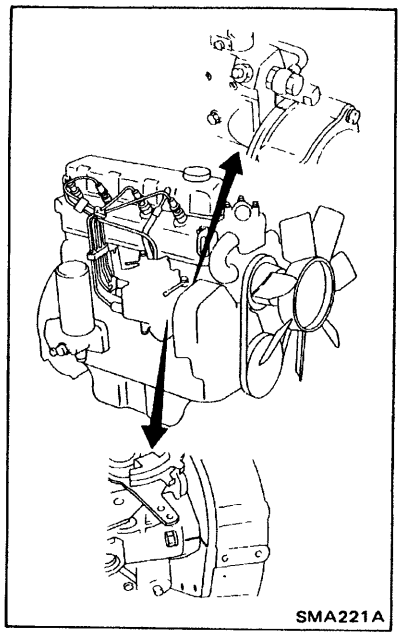

IDLE AND MAXIMUM SPEED ADJUSTMENT

IN-LINE TYPE

CAUTION:

a. Do not remove sealing wires unless absolutely necessary.

b. Maximum speed adjusting screw is retained by sealing wire and need not be adjusted under normal circumstances. However, if it should become necessary, adjust it with the screw. After adjustment, always wind up with sealing wire.

Throttle control wire adjustment

1.
- Turn idle control knob fully counterclockwise.
- Push idle control knob in.

2. Make sure that free play is 1 mm (0.04 in) at venturi's throttle lever.
3. If not within the specified range, adjust with wire adjusting nut.
4. After adjusting free play properly, tighten lock nut.

Idle adjustment

1.
- Turn idle control knob fully counterclockwise.
- Push idle control knob in.

2. Run engine until coolant temperature indicator points to the middle of gauge.
3. Attach tachometer's pick-up to No.1 fuel injection tube.

In order to obtain a more accurate reading of engine speed, remove the clamps on No. 1 injection tube.

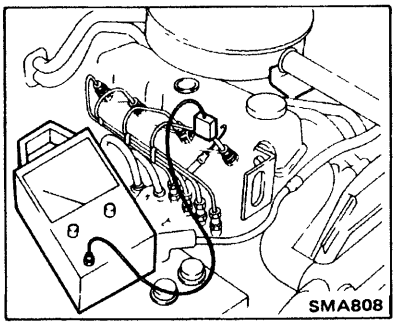

4. Loosen lock nut, then adjust engine to the specified idle speed with idle speed screw.

Idle speed:
550 - 650 rpm
(without power steering/ Air conditioner)
650 - 750 rpm
(with power steering/ Air conditioner)

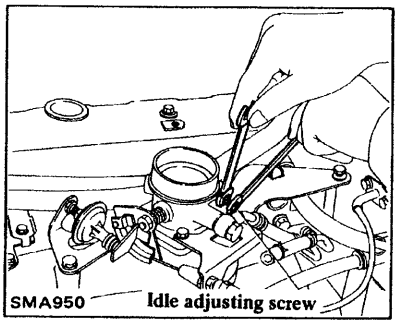

5. After adjusting idle speed, tighten lock nut.

Maximum speed adjustment

Maximum speed adjusting screw is retained by sealing wire and need not be adjusted under normal circumstances. However, if it should become necessary to adjust it, the following procedures should be followed:

1. Start engine and warm it up until coolant temperature indicator points to middle of gauge.
2. Connect tachometer's pick-up to No. 1 fuel injection tube.

To obtain accurate reading of engine rpm, loosen clamp that secures No. 1 fuel injection tubes.

3. To obtain maximum speed, turn the adjusting screw either direction while fully depressing accelerator pedal.

Maximum engine speed (Under no load): 4,200 - 4,400 rpm

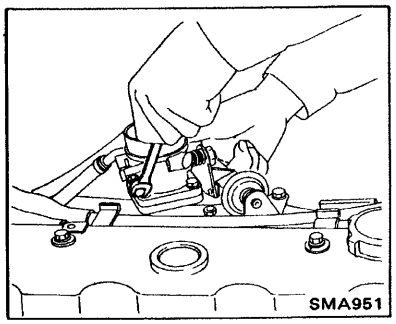

4. After adjustment, tighten lock nut securely.
5. Wind up with a sealing wire.

Dash pot

Adjusting

After idle adjustment, dash pot adjustment must be performed.

1. Warm up engine.
2. Attach a diesel tacho tester's pick-up to No. 1 injection tube.

In order to obtain a more accurate reading of engine speed, remove the clamp on No. 1 injection tube.

3. Loosen dash pot lock nut.
4. Maintain engine speed at 1,280 to 1,350 rpm. Operate and adjust dash pot so that control lever tip contacts dash pot tip.

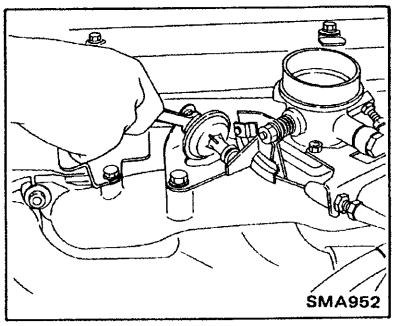

5. Tighten dash pot lock nut.

VE-TYPE

CAUTION:

a. Do not remove sealing wires unless absolutely necessary.

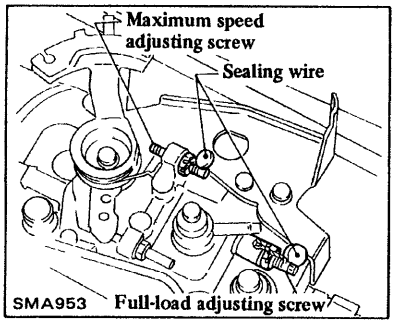

b. Disturbing full-load adjusting screw adjustment will change fuel flow characteristics, resulting in an improperly adjusted engine. Readjustment of fuel injection pump should be done using a pump tester.

c. If maximum speed adjusting screw is turned in direction that increases control lever angle, engine damage may result.

Throttle control wire adjustment

1. Turn idle control knob fully counterclockwise.
2. Make sure that clearance between idle control lever pin and fuel injection pump control lever is within the specified range.

Clearance:
1 - 2 mm (0.04 - 0.08 in)

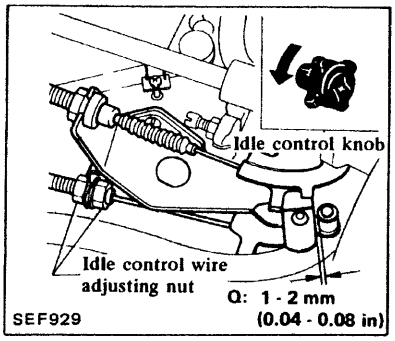

3. If not within the specified range, adjust with idle control wire adjusting nut.
4. After adjusting clearance, tighten lock nut.

Idle adjustment

1. Turn idle control knob fully counterclockwise.
2. Start engine and warm it up until coolant temperature indicator points to middle of gauge.
3. Attach tachometer's pick-up to No. 1 fuel injection tube.

In order to take accurate reading of engine rpm, remove clamps that secures No. 1 fuel injection tube.

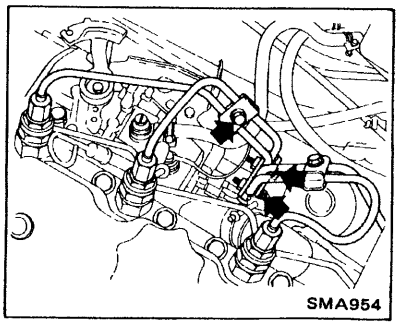

4. Adjust engine to specified idle speed with idle speed adjusting screw.

Idle speed:
550 - 650 rpm
(without power steering/ Air conditioner)
650 - 750 rpm
(with power steering/ Air conditioner)

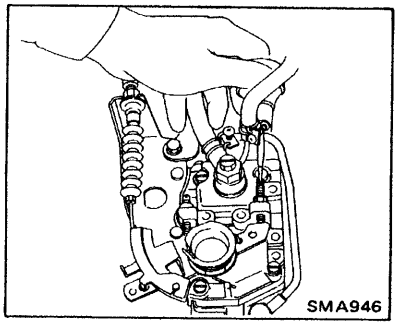

5. After adjusting idle speed properly, tighten lock nut.

Maximum speed adjustment

Maximum speed adjusting screw is retained by sealing wire and need not be adjusted under normal circumstances. However, if it should become necessary to adjust it, the following procedure should be followed:

1. Start engine and warm it up until coolant temperature indicator points to middle of gauge.
2. Connect tachometer's pick-up to No. 1 fuel injection tube.

To obtain accurate reading of engine rpm, remove clamps that secures No. 1 fuel injection tube.

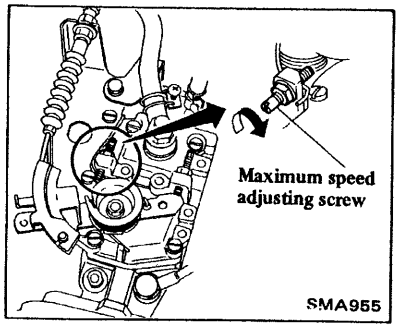

3. Depress accelerator pedal fully under no load and, at this point, read the tachometer indication.

Maximum engine speed (Under no load):
4,450 - 4,750 rpm
(Except for Europe)
4,500 - 4,700 rpm
(For Europe)

4. If indication is lower than specified maximum engine speed, turn maximum speed adjusting screw counterclockwise 1 or 2 rotations. Then depress accelerator pedal to floor under no load and, at this point, read indication.
5. If indication is still lower than specified speed, repeat step 4 above until specified engine speed is reached.
6. After adjustment, tighten lock nut securely.
7. Wind up with a sealing wire.

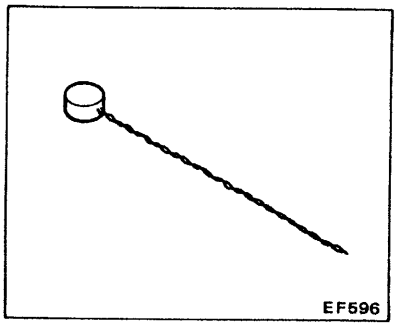

C.A.V.-D.P.A. TYPE

CAUTION:
a. Do not remove sealing wires unless absolutely necessary.
b. Always adjust the engine's maximum speed so that it can not overrun. Overrunning can damage engine.

Throttle control wire adjustment

1. Turn idle control knob fully counterclockwise.
2. Make sure that free play is 1 mm (0.04 in) at pump control lever.
3. If not within the specified range, adjust with wire adjusting nuts.
4. After adjusting free play properly, tighten lock nut.

Idle adjustment

1. Run engine until coolant temperature indicator points to middle of gauge.
2. Disengage accelerator wire at injection pump throttle lever.
3. Adjust engine to the specified idle speed with idle adjusting screw.

Idle speed: 650 rpm

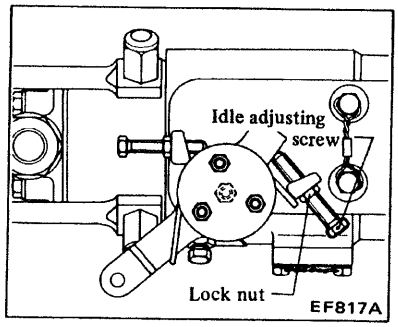

If engine speed does not drop to specified idle speed by means of idle adjusting screw, adjust anti-stall screw. Refer to Anti-stall Adjustment.

4. After adjusting idle speed properly, tighten lock nut.
5. Engage accelerator wire at injection pump throttle lever.

Ensure that engine does not stall when accelerator pedal is abruptly released from fully depressed position. If it stalls, make "an anti-stall adjustment".

Maximum speed adjustment

1. Disengage accelerator wire at the injection pump throttle lever.
2. Run engine under no load, and move throttle lever to fully open position. Adjust engine to specified max. rpm (under no load).

Max. engine speed (No load):
4,250 - 4,300 rpm

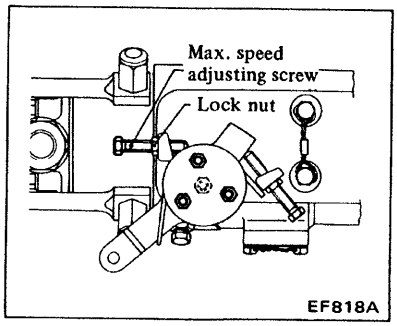

3. After adjustment, tighten lock nut securely.
4. Slide a sealing sleeve over max. speed adjusting screw, and wind up with a wire.

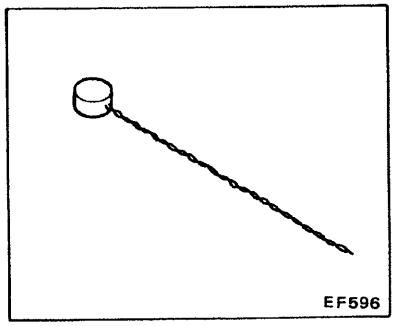

5. Engage accelerator wire at injection pump throttle lever.

Seal up at the following three places.
(1) Max. speed adjusting screw (Nissan)
(2) Control cover mounting bolt (Pump manufacturer)
(3) Cover plate mounting bolt on pump housing side (Pump manufacturer)

If injection pump is renewed, have new pump adjusted for max. engine speed and sealed up by distributor.

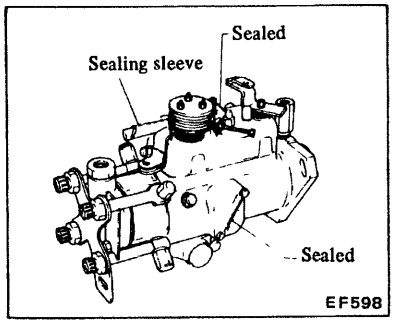

Anti-stall adjustment

If any of the following conditions is noted, make an anti-stall adjustment.
a. Engine stalls when accelerator pedal is abruptly released from full throttle position.
b. Engine does not drop to idle speed with idle adjusting screw.

Adjustment of condition (a)

1. Disengage accelerator wire at injection pump throttle lever.
2. Turn anti-stall screw in until engine speed starts to increase. From that position, turn screw out one-half rotation.

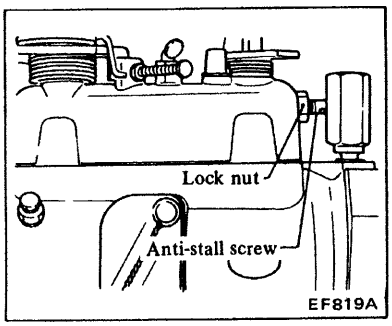

3. After adjusting idle speed and engaging accelerator wire, ensure that engine does not stall.

If lock nut is left loose during adjustment, fuel may leak.

Tighten lock nut whenever fuel leakage occurs.

Adjustment of condition (b)

Turn anti-stall screw out, then adjust engine to specified idle speed in same manner as adjustment of condition (a).

INJECTION NOZZLE

INSPECTION

Check valve for nozzle tester should be closed to prevent damage to gauge.
a. Check initial injection pressure by pumping tester handle one time per second.

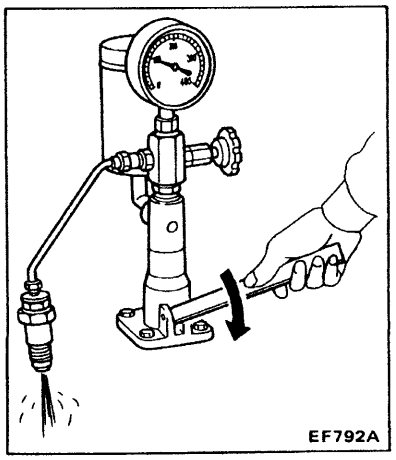

Initial injection pressure:
DIESEL KIKI
9,807 - 10,297 kPa
(98.1 - 103.0 bar,
100 - 105 kg/cm^2,
1,422 - 1,493 psi)
C.A.V.-D.P.A.
12,259 - 13,239 kPa
(122.6 - 132.4 bar,
125 - 135 kg/cm^2,
1,778 - 1,920 psi)

New nozzle initial injection pressure:
DIESEL KIKI
10,297 - 11,082 kPa
(103.0 - 110.8 bar,
105 - 113 kg/cm^2,
1,493 - 1,607 psi)
C.A.V.-D.P.A.
13,141 - 13,730 kPa
(131.4 - 137.3 bar,
134 - 140 kg/cm^2,
1,905 - 1,991 psi)

The new nozzle requires that the initial injection pressure always be checked.
b. Check spray pattern by pumping tester handle 4 to 6 times per second or more.

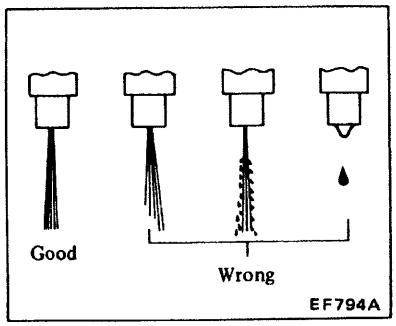

If injection starting pressure or spray pattern is not normal, adjust injection nozzle. For details, refer to INJECTION NOZZLE ASSEMBLY in EF section.

CLEANING AND REPLACING AIR CLEANER FILTER

a. Replace viscous type filter element at the specified maintenance intervals. It does not have to be cleaned between replacement periods.

b. Clean dry type filter element at the specified maintenance intervals. If necessary, replace it.

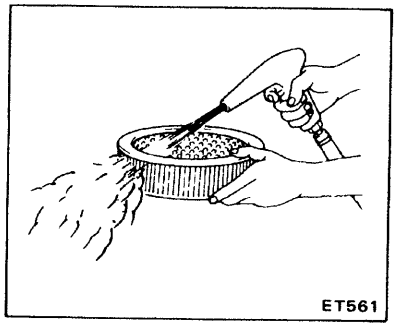

1. Remove air cleaner cover.
2. Replace or clean air cleaner element.

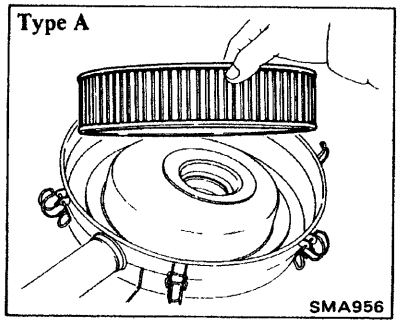

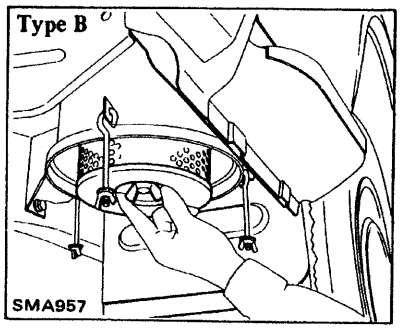

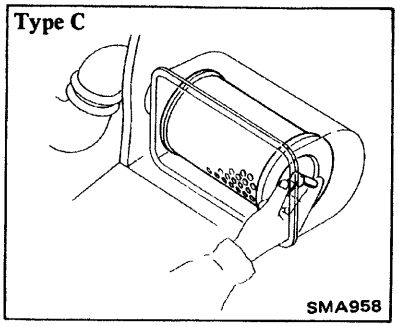

CHECKING FUEL FILTER, DRAINING WATER AND REPLACING FILTER

REPLACING FUEL FILTER

In-line type

Cartridge

1. Remove fuel filter, using Tool.

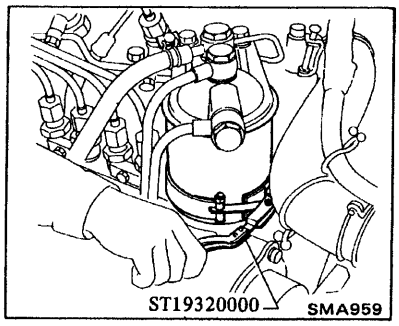

2. Install new fuel filter.

Hand-tighten only.

DO NOT use wrench to tighten filter.

3. Bleed fuel system.

Refer to Bleeding Fuel System in EF section.

Except cartridge

1. Check fuel filter.

Check for contamination, leak or cracks.

Clean, repair or replace if necessary.

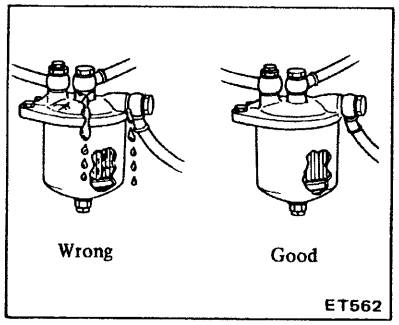

2. Drain fuel by loosening drain plug.
3. Loosen center bolt and remove bolt, filter body, element, lower cover, etc.
4. Clean component parts.
5. Install new element and assemble fuel filter.

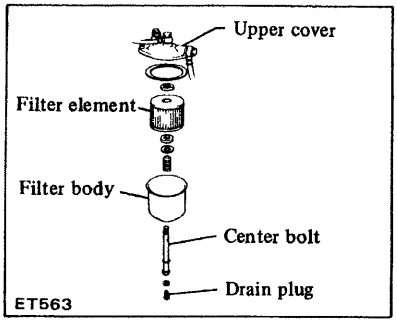

6. Bleed fuel system.

Refer to Bleeding Fuel System in EF section.

VE-type

1. Remove fuel filter sensor and drain fuel.

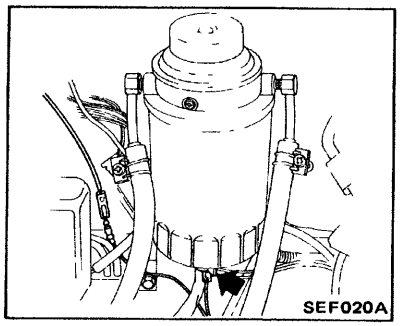

2. Remove fuel filter, using Tool.

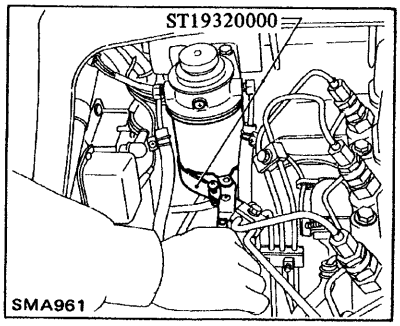

3. Install fuel filter sensor to new fuel filter.
4. Install fuel filter to priming pump.

Hand-tighten only.

DO NOT use wrench to tighten filter.

5. Bleed fuel system.

Refer to Bleeding Fuel System in EF section.

C.A.V.-D.P.A. type

1. Check for contamination, leaks or cracks.
   Clean, repair or replace if necessary.

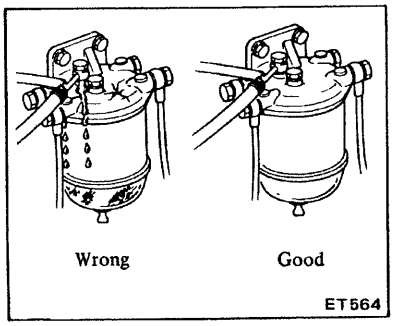

2. Drain fuel in filter.
3. Loosen center bolt and remove stud, filter bowl, element assembly, etc.
4. Clean component parts.
5. Install new element and assemble fuel filter.

Always replace seal rings and O-ring.

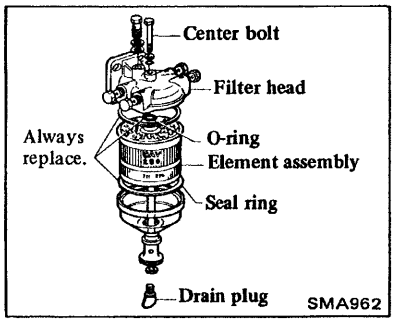

6. Bleed fuel system.

Refer to Bleeding Fuel System in EF section.

DRAINING WATER

a. Drain water from fuel filter in accordance with maintenance schedule. Also do this when warning light comes on (for VE-type.)
b. Bleed air from fuel system.
c. Be sure to place a container beneath fuel filter.

In-line type

1. Loosen drain cock and drain water.

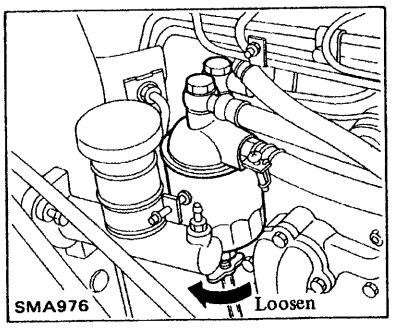

2. After draining all fuel from fuel filter, tighten drain cock.
3. Bleed fuel system.

Refer to Bleeding Fuel System in EF section.

VE-type

1. Set a container under fuel filter.
2. Remove fuel detector sensor and drain water.

Pumping priming pump will quicken water drain.

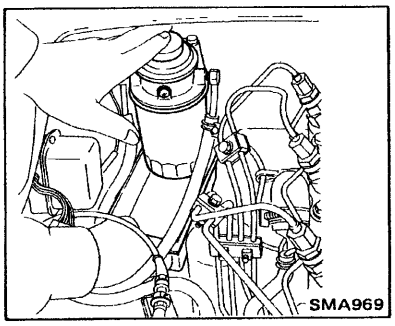

3. Install fuel detector sensor to filter.
4. Bleed fuel system.

Refer to Bleeding Fuel System in EF section.

C.A.V.-D.P.A. type

1. Remove drain plug and drain water.

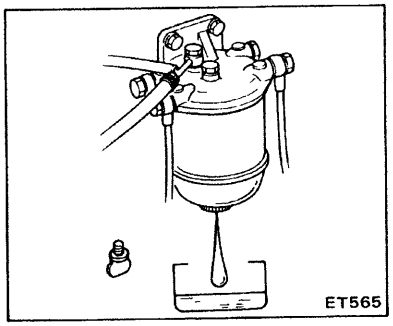

2. Install drain plug to filter.
3. Bleed fuel system.

Refer to Bleeding Fuel System in EF section.

CHECKING FUEL LINES (Hoses, piping, connectors, etc.)

1. Check fuel line for leaks, particularly around fuel pipe and fuel hose connections with engine running.
2. Tighten loose connections and replace any damaged or deformed parts.

CHECKING RUBBER HOSES (Water, air vacuum and oil hoses, etc.)

1. Check injection pump governor vacuum hose and air hose, water hose and oil hose for damage, cracks or deterioration.
2. Tighten loose connections and replace any parts with cracks or deterioration.

COOLING AND LUBRICATION SYSTEM

CHANGING ENGINE COOLANT

WARNING:
To avoid the danger of being scalded, never attempt to change the coolant when the engine is hot.

When changing engine coolant on heater equipped models, set heater "TEMP" control lever at full "HOT" position.

1. Open drain cock at bottom of radiator, and remove radiator cap.

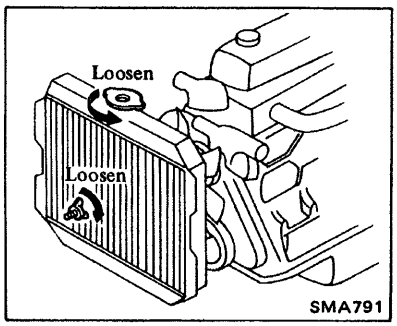

2. Remove cylinder block drain plug.

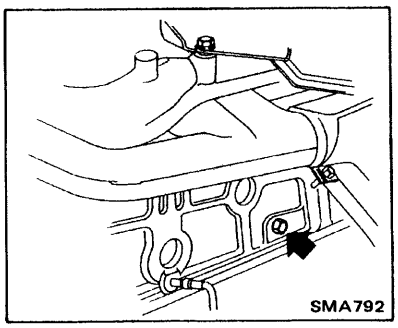

3. Drain coolant completely.
   Then flush cooling system.
4. Close drain cock and plug.
5. Fill radiator with coolant up to filler opening, observing instructions attached to anti-freeze container for mixing ratio of anti-freeze to water.
6. Run engine for a few minutes.
   If necessary, add coolant.
7. Fill reservoir tank with coolant up to "MAX" level.
8. Install radiator cap.
   Check drain cock and plug for any sign of leakage.

CHECKING COOLING SYSTEM HOSES AND CONNECTIONS FOR LEAKS

Check hoses and fittings for loose connections or deterioration.

Retighten or replace if necessary.

CHECKING RADIATOR CAP

Using cap tester, check the radiator cap relief pressure.

If the pressure gauge drops rapidly and excessively, replace the radiator cap.

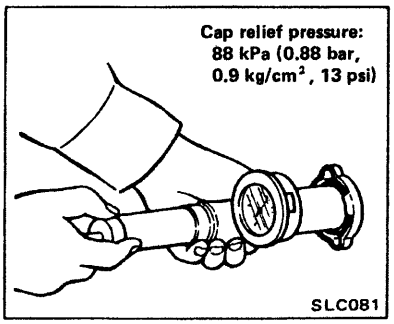

CHECKING COOLING SYSTEM FOR LEAKS

Attach pressure tester and pump tester, and apply specified pressure. Check for drop in pressure.

If pressure drops, check for leaks from hoses, radiator, or water pump. If no external leaks are found, check heater core, block and head.

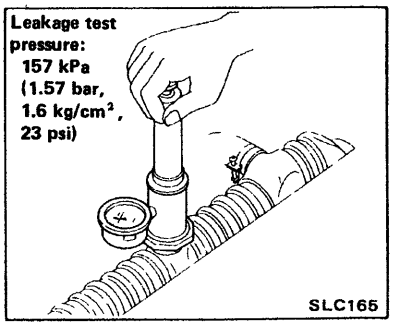

CHANGING ENGINE OIL AND OIL FILTER

1. Warm up engine.
2. Remove oil pan drain plug and oil filler cap, and allow oil to drain.

WARNING:
Be careful not to burn yourself, as the engine oil may be hot.

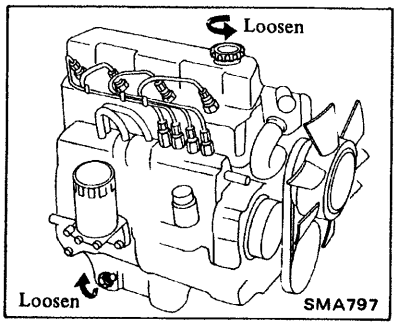

- **A milky oil indicates the presence of cooling water. Isolate the cause and take corrective measures.**
- **An oil with extremely low viscosity indicates the presence of fuel.**

3. Clean and install oil pan drain plug with washer.

Ⓣ : Oil pan drain plug
49 - 59 N·m
(5 - 6 kg-m,
36 - 43 ft-lb)

4. Remove oil filter.

Cartridge type

(1) Using Tool, remove oil filter.

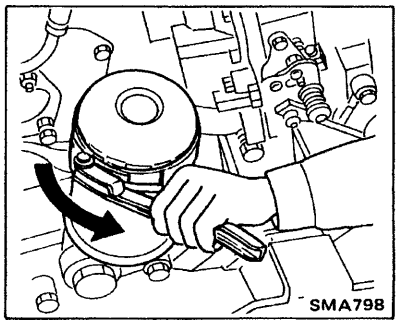

(2) Wipe oil filter mounting surface with a clean rag.

(3) Smear a little engine oil on rubber lip of new oil filter.

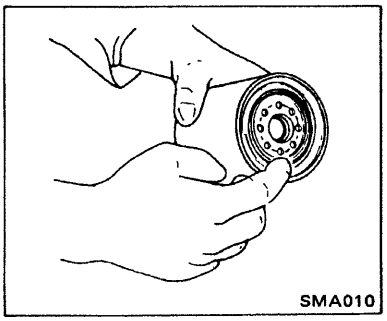

(4) Install new oil filter. **Hand-tighten ONLY. DO NOT use a wrench to tighten the filter.**

Center shaft type

(1) Remove center shaft.

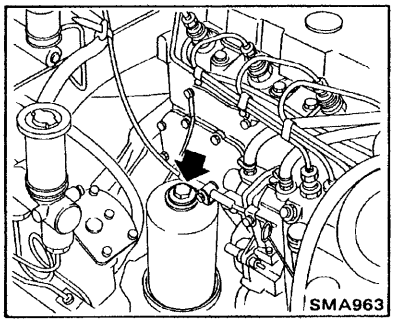

(2) Take out filter element.
(3) Install new element

Always use new gaskets.

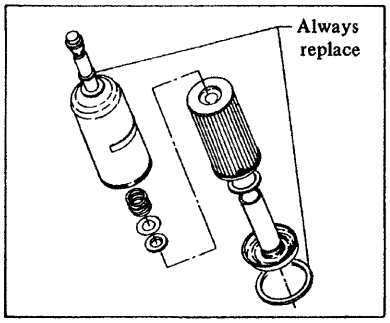

(4) Tighten center shaft.

Ⓣ : Oil filter center shaft
SD 4-cylinder
25 - 29 N·m
(2.5 - 3.0 kg-m,
18 - 22 ft-lb)

SD33
20 - 25 N·m
(2.0 - 2.5 kg-m,
14 - 18 ft-lb)

5. Refill engine with new engine oil, referring to Recommended Lubricants in Owner's Manual loaded on vehicle.

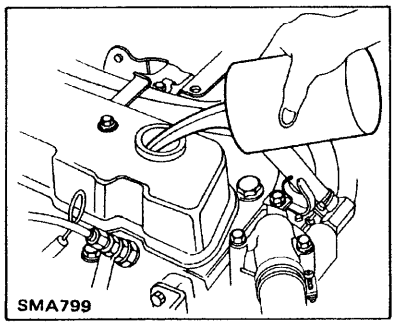

a. Start engine. Check area around drain plug and oil filter for any sign of oil leakage.
If any leakage is evident, these parts have not been properly installed.
b. Run engine until water temperature indicator points to the middle of gauge. Then stop engine and check oil level with dipstick. If necessary, add engine oil.
c. When checking oil level, park the car on a level surface.

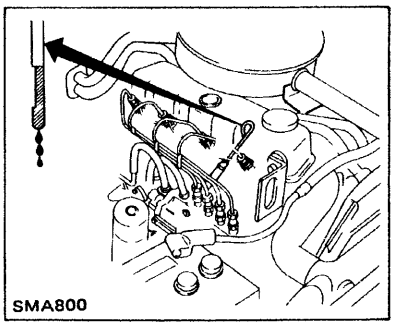

CHECKING ENGINE OIL FOR LEAKS

Check cylinder head, front engine cover, oil pan, oil pump, oil filter gasket, etc. or other parts for sign of leaks past their gasketed surfaces. If necessary, replace gaskets or faulty parts. After maintenance has been done, check replaced parts to see if any leaks occur.

CHECKING AND CHANGING INJECTION PUMP OIL (Lubrication type only)

1. Check oil level.

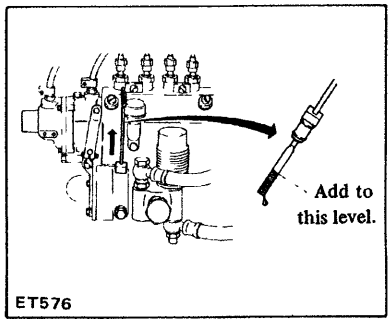

2. Change oil at specified intervals.

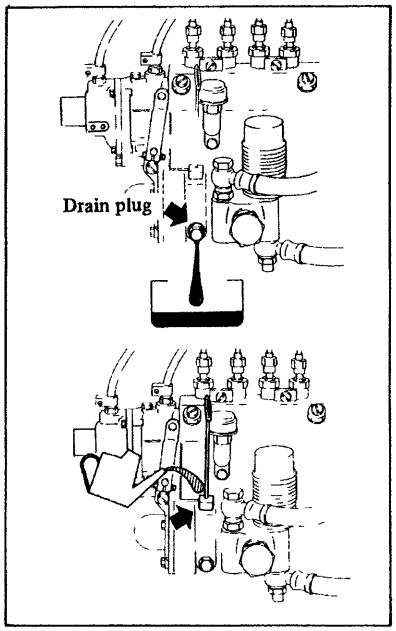

3. Check for leaks.

LUBRICATING INJECTION PUMP GOVERNOR DIAPHRAGM

1. Drain fuel from governor chamber.

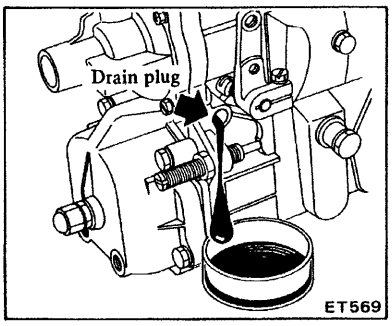

2. Lubricate governor diaphragm.
   Fill with three to four droplets of diaphragm oil.

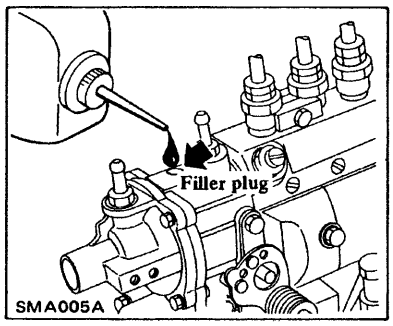

Diaphragm oil
OL36V1 or cod liver oil

ELECTRICAL SYSTEM

CHECKING GLOW PLUGS

1. Remove glow plugs from cylinder head.
2. Check continuity in glow plugs.
If there is no continuity, replace it.

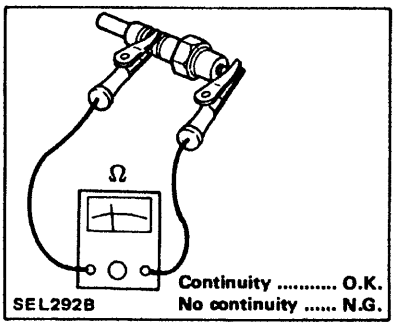

SERVICE DATA AND SPECIFICATIONS

INSPECTION AND ADJUSTMENT

BASIC MECHANICAL SYSTEM

Valve clearance (Hot) mm (in) Intake	0.35 (0.014)
Exhaust	0.35 (0.014)
Fan belt deflection mm/N (kg), (in/lb)	8 - 12/98 (10), (0.31 - 0.47/22)
Compression pressure kPa (bar, kg/cm^2, psi)/rpm Standard	2,942 (29.4, 30, 427)/200
Minimum	2,452 (24.5, 25, 356)/200
Compression differential limit between cylinders	294 (2.9, 3, 43)/200

INJECTION SYSTEM

Injection timing B.T.D.C./rpm DIESEL KIKI-Bosch in-line type	18°/600 (Only for 720 model with SD23 or SD25)
	20°/600 (For the others)
VE type	8°/600
C.A.V.-D.P.A. type	14.5°/600
Idling rpm In-line & VE type	550 - 650 (without power steering/air conditioner)
	650 - 750 (with power steering/air conditioner)
C.A.V.-D.P.A. type	650
Max. engine speed under no load rpm In-line type	4,200 - 4,400
VE type	4,450 - 4,750 (Except for Europe)
	4,500 - 4,700 (For Europe)
C.A.V.-D.P.A. type	4,250 - 4,300
Dash pot Touch speed rpm	1,280 - 1,350

COOLING SYSTEM

Unit: kPa (bar, kg/cm^2, psi)

Radiator cap relief pressure	88 (0.88, 0.9, 13)
Cooling system leakage testing pressure	157 (1.57, 1.6, 23)

TIGHTENING TORQUE

		N·m	kg-m	ft-lb
Cylinder head bolt 1st turn: Main bolt		59 - 78	6.0 - 8.0	43 - 58
2nd turn: Sub bolt		20 - 29	2.0 - 3.0	14 - 22
3rd turn: Main bolt		118 - 127	12 - 13	87 - 94
4th turn: Sub bolt		44 - 54	4.5 - 5.5	33 - 40
Rocker shaft bracket bolt		20 - 25	2.0 - 2.5	14 - 18
Manifold nut Intake & exhaust		15 - 18	1.5 - 1.8	11 - 13
Injection nozzle assembly (to cylinder head)	*1	59 - 69	6.0 - 7.0	43 - 51
	*2	69 - 78	7.0 - 8.0	51 - 58
Injection pump securing nut DIESEL KIKI-Bosch in-line type		20 - 25	2.0 - 2.5	14 - 18
VE-type	nut	20 - 25	2.0 - 2.5	14 - 18
	bolt	16 - 22	1.6 - 2.2	12 - 16
C.A.V.-D.P.A. type		15 - 20	1.5 - 2.0	11 - 14
Oil filter center shaft (Full-flow type)	SD 4-cylinder	25 - 29	2.5 - 3.0	18 - 22
	SD33	20 - 25	2.0 - 2.5	14 - 18
Venturi securing nut		3 - 4	0.3 - 0.4	2.2 - 2.9
Oil pan drain plug		49 - 59	5.0 - 6.0	36 - 43
Spill tube nut		39 - 49	4.0 - 5.0	29 - 36

*1 Part No. of injection nozzle
16600-90060, 16600-36W00, 16600-T9000

*2 Part No. of injection nozzle
16600-37502, 16600-90012, 16600-90019, 16600-J5571, 16600-T3401, 16600-T3470, 16600-T6200, 16600-T6201, 16600-Y8400, 16600-Y8401

TROUBLE DIAGNOSES AND CORRECTIONS

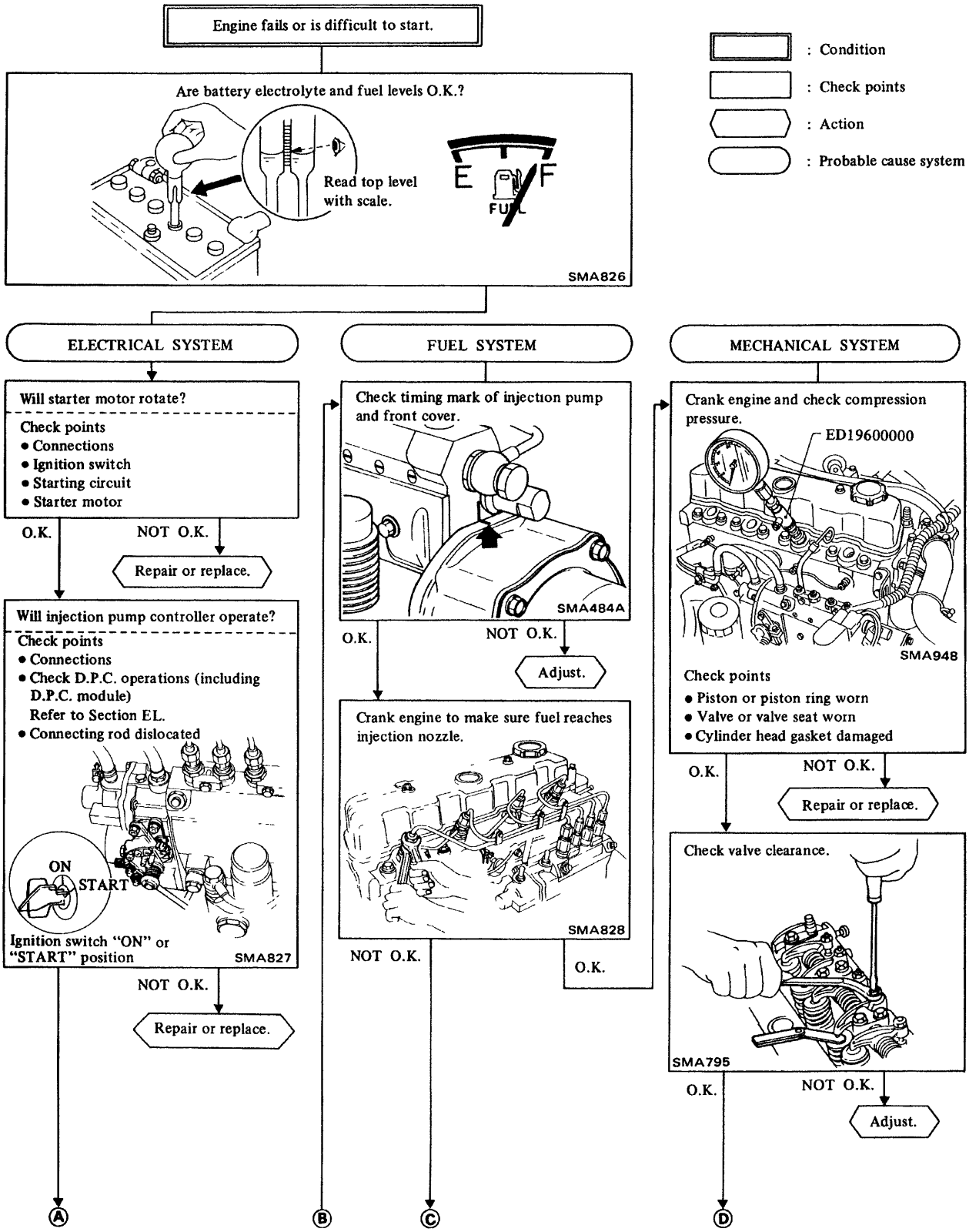

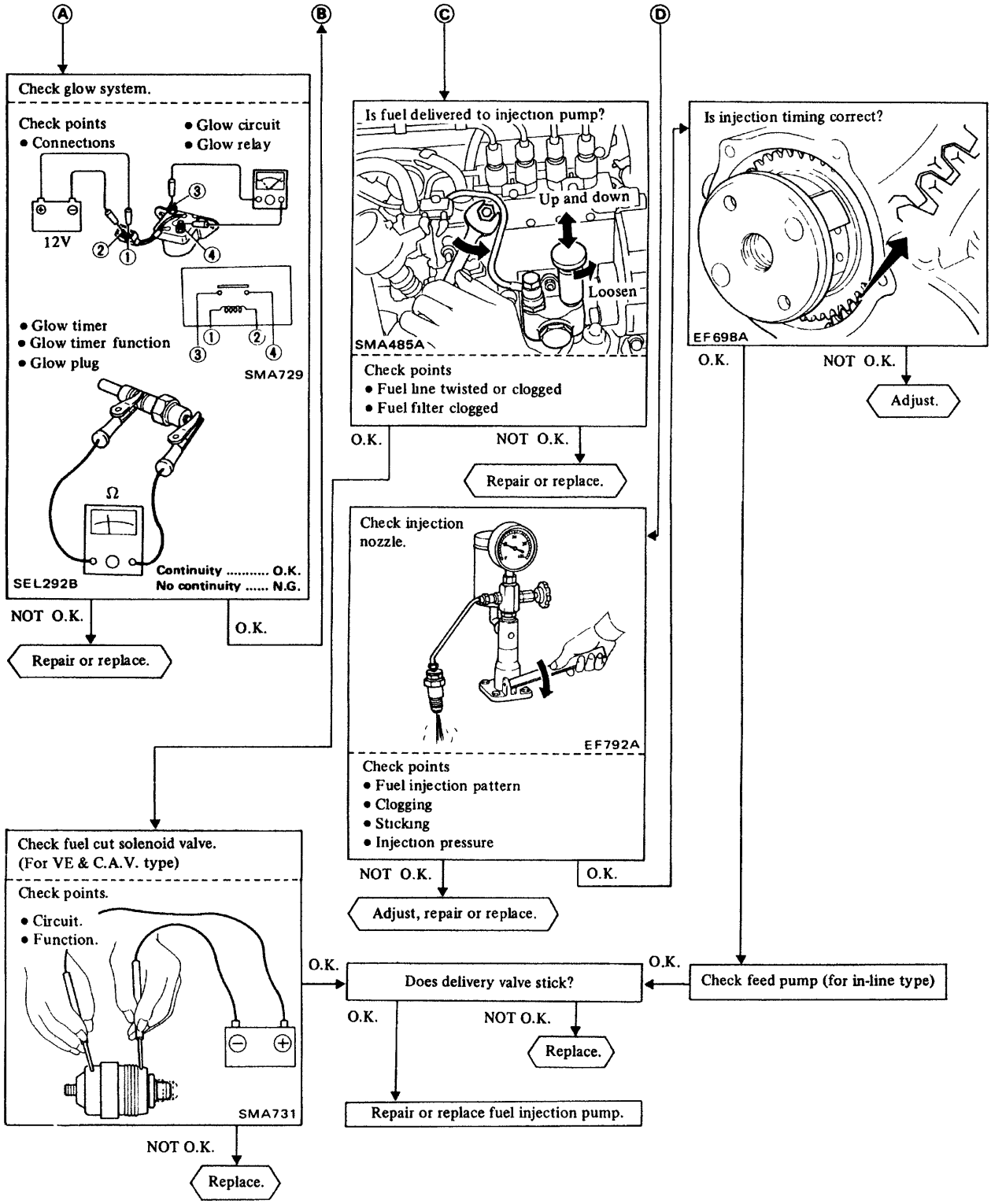
A
B
C
D
Check glow system.
Check points
• Connections
• Glow circuit
• Glow relay
12V
• Glow timer
• Glow timer function
• Glow plug
SMA729
Ω
SEL292B
Continuity ..... O.K.
No continuity ..... N.G.
NOT O.K.
Repair or replace.
O.K.
Is fuel delivered to injection pump?
Up and down
Loosen
SMA485A
Check points
• Fuel line twisted or clogged
• Fuel filter clogged
O.K.
NOT O.K.
Repair or replace.
Is injection timing correct?
EF698A
O.K.
NOT O.K.
Adjust.
Check injection nozzle.
EF792A
Check points
• Fuel injection pattern
• Clogging
• Sticking
• Injection pressure
NOT O.K.
O.K.
Adjust, repair or replace.
Check fuel cut solenoid valve.
(For VE & C.A.V. type)
Check points.
• Circuit.
• Function.
SMA731
NOT O.K.
Replace.
O.K.
Does delivery valve stick?
O.K.
NOT O.K.
Replace.
Repair or replace fuel injection pump.
O.K.
Check feed pump (for in-line type)

UNSTABLE IDLING SPEED

FUEL SYSTEM

Check timing mark of injection pump and front cover.

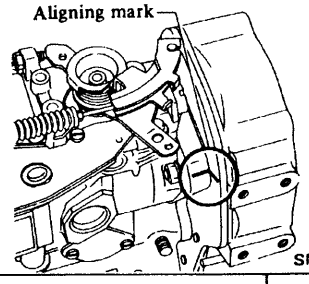

O.K. → Check idle speed.

NOT O.K. → Adjust.

Check idle speed.

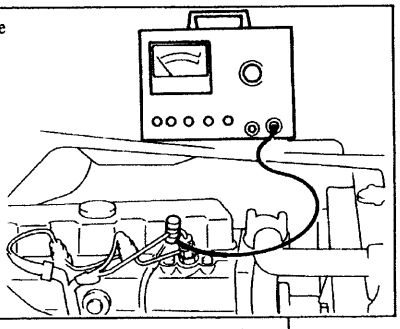

O.K. → Check fuel line

NOT O.K. → Adjust.

Check fuel line

Check points
- Fuel line twisted or clogged
- Fuel filter clogged
- Leaks or loose

O.K. → Purge air

NOT O.K → Repair, retighten or replace.

Purge air

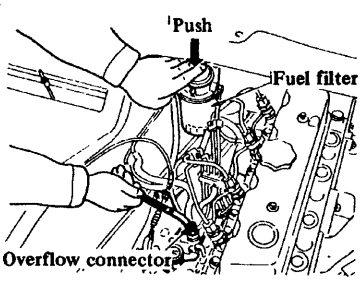

MECHANICAL SYSTEM

Is injection timing correct?

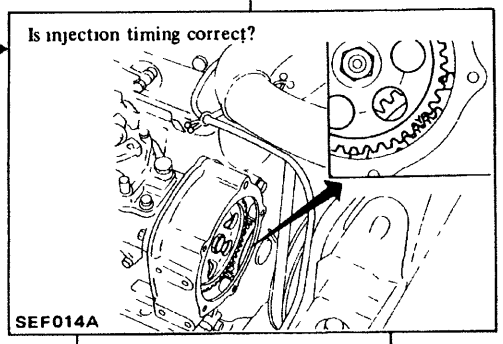

O.K. → Check valve clearance.

NOT O.K. → Adjust.

Check valve clearance.

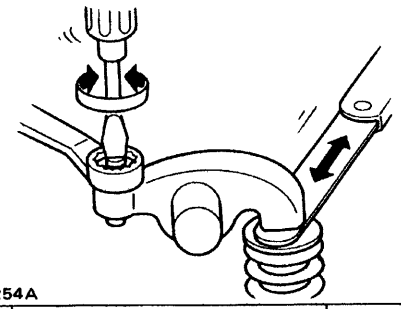

O.K. → Check engine mounting.

NOT O.K. → Adjust.

Check engine mounting.

Check points
- Cracked
- Loose

O.K. → Ⓐ

NOT O.K. → Replace or retighten.

Ⓐ

Check injection nozzle.

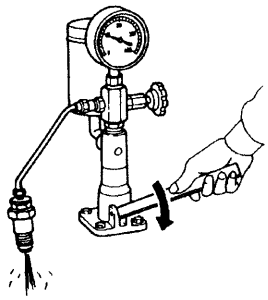

EF792A

Check points
- Fuel injection pattern
- Clogging
- Sticking

O.K. → Check initial (for VE-type) timing.

NOT O.K. → Adjust, repair or replace.

Check initial (for VE-type) timing.

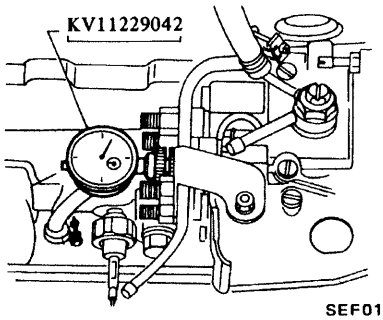

SEF016A

O.K. → Check feed pump (for in-line type).

NOT O.K. → Adjust or replace.

Check feed pump (for in-line type).

O.K. → Does delivery valve stick?

NOT O.K. → Repair or replace.

Does delivery valve stick?

NO. → Repair or replace fuel injection pump.

YES. → Replace.

Repair or replace fuel injection pump.

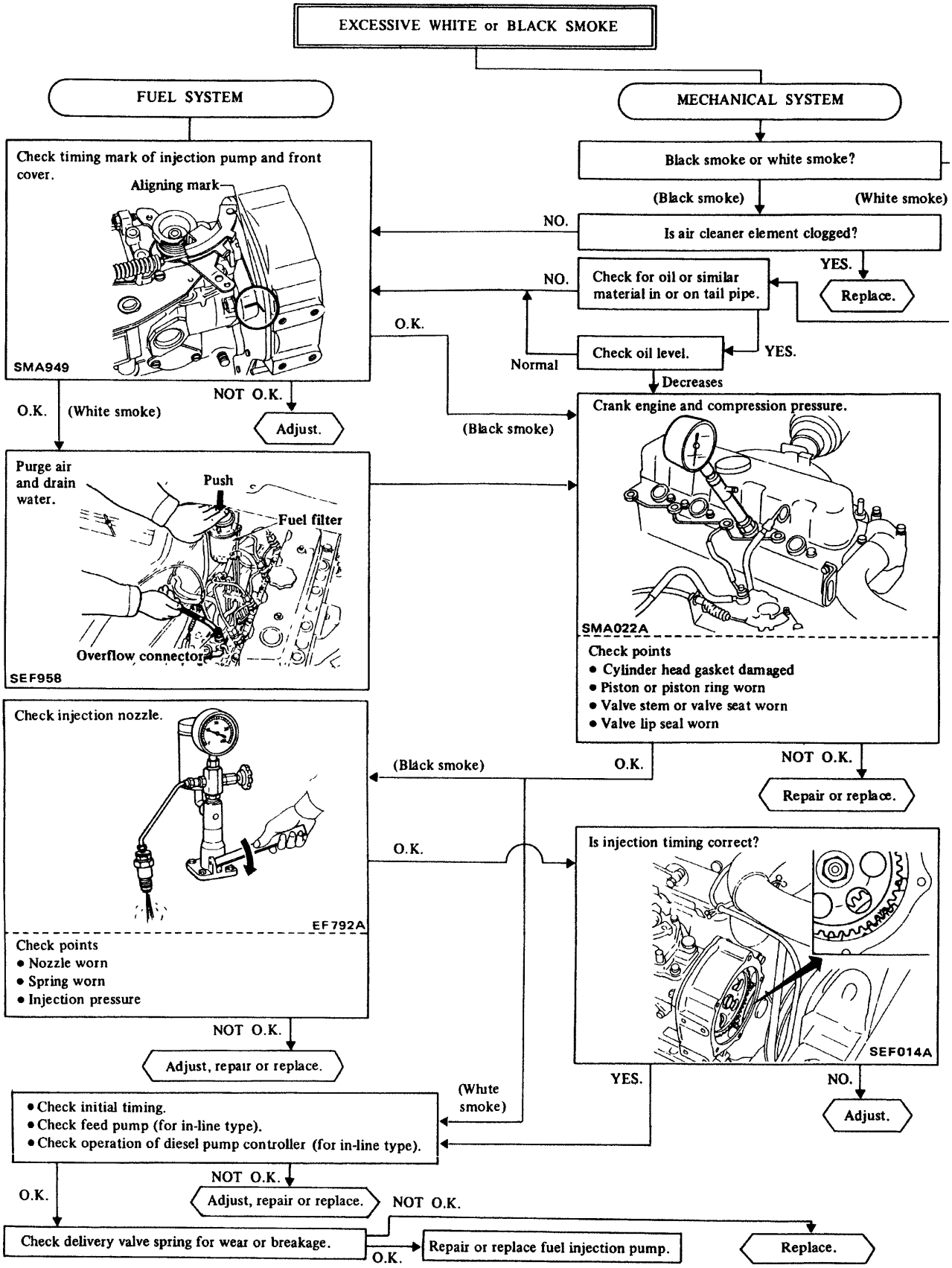
EXCESSIVE WHITE or BLACK SMOKE
FUEL SYSTEM
MECHANICAL SYSTEM
Check timing mark of injection pump and front cover.
Aligning mark
SMA949
NOT O.K.
Adjust.
O.K.
(White smoke)
Purge air and drain water.
Push
Fuel filter
Overflow connector
SEF958
Check injection nozzle.
EF792A
Check points
• Nozzle worn
• Spring worn
• Injection pressure
NOT O.K.
Adjust, repair or replace.
Black smoke or white smoke?
(Black smoke)
(White smoke)
NO.
Is air cleaner element clogged?
YES.
Replace.
NO.
Check for oil or similar material in or on tail pipe.
O.K.
Normal
Check oil level.
YES.
Decreases
(Black smoke)
Crank engine and compression pressure.
SMA022A
Check points
• Cylinder head gasket damaged
• Piston or piston ring worn
• Valve stem or valve seat worn
• Valve lip seal worn
(Black smoke)
O.K.
NOT O.K.
Repair or replace.
O.K.
Is injection timing correct?
SEF014A
YES.
NO.
Adjust.
(White smoke)
• Check initial timing.
• Check feed pump (for in-line type).
• Check operation of diesel pump controller (for in-line type).
NOT O.K.
Adjust, repair or replace.
O.K.
NOT O.K.
Check delivery valve spring for wear or breakage.
O.K.
Repair or replace fuel injection pump.
Replace.

LOW POWER

FUEL SYSTEM

Fuel quality is normal.

O.K. → Does venturi's butterfly valve open fully?

NOT O.K. → Replace.

Does venturi's butterfly valve open fully?

Check points
- Accelerator pedal stroke
- Accelerator wire elongated
- Accelerator linkage stuck

O.K. → Check timing mark of injection pump and front cover.

NOT O.K. → Adjust or repair.

Check timing mark of injection pump and front cover.

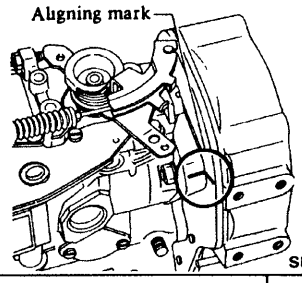

O.K. → Check fuel line.

NOT O.K. → Adjust.

Check fuel line.

Check points
- Fuel line twisted or clogged
- Fuel filter clogged
- Leaks or loose

O.K. → Purge air

NOT O.K. → Repair, retighten or replace.

Purge air

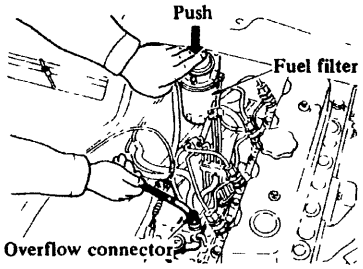

MECHANICAL SYSTEM

Check air cleaner element for clogs.

O.K. → Crank engine and check compression pressure.

NOT O.K. → Replace.

Crank engine and check compression pressure.

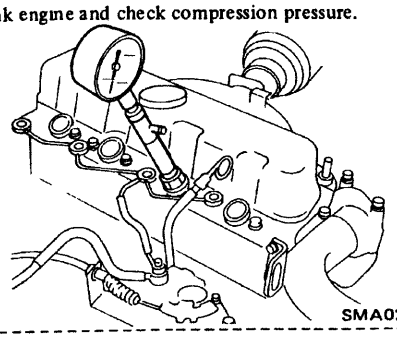

Check points
- Piston or piston ring worn
- Valve stem or valve seal worn
- Cylinder gasket damaged

O.K. → Check valve clearance

NOT O.K. → Repair or replace.

Check valve clearance

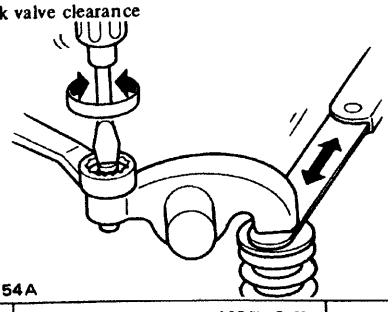

O.K. → Ⓐ

NOT O.K. → Adjust.

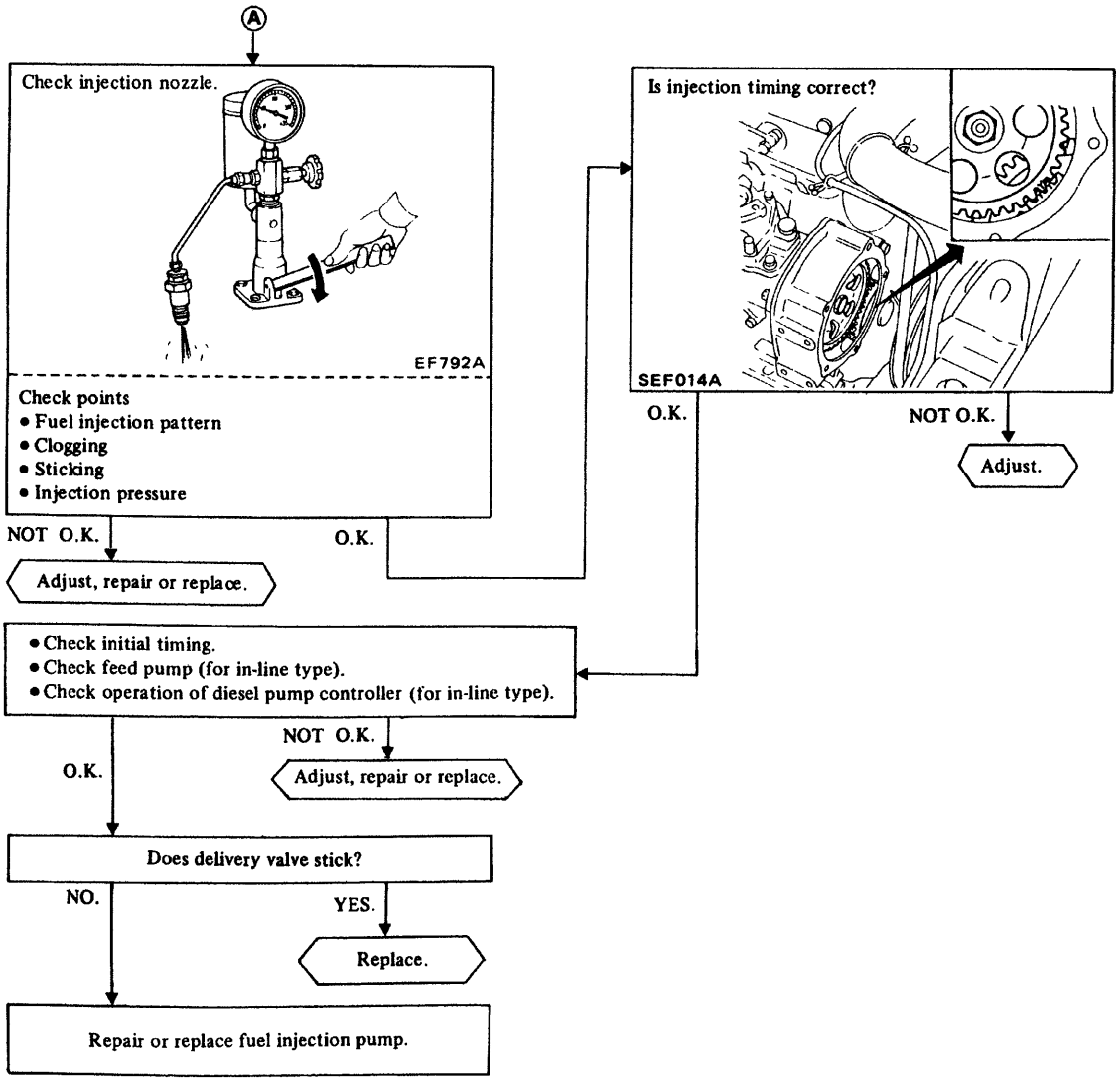
A
Check injection nozzle.
EF792A
Check points
• Fuel injection pattern
• Clogging
• Sticking
• Injection pressure
NOT O.K.
Adjust, repair or replace.
O.K.
Is injection timing correct?
SEF014A
O.K.
NOT O.K.
Adjust.
• Check initial timing.
• Check feed pump (for in-line type).
• Check operation of diesel pump controller (for in-line type).
NOT O.K.
Adjust, repair or replace.
O.K.
Does delivery valve stick?
NO.
YES.
Replace.
Repair or replace fuel injection pump.

WATER LEAKAGE

RADIATOR

Check drain cock.

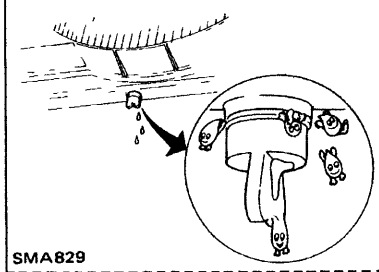

Check points
- Packing damaged
- Drain cock loose

O.K. → Check cooling system pressure.

NOT O.K. → Retighten or replace.

Check cooling system pressure.

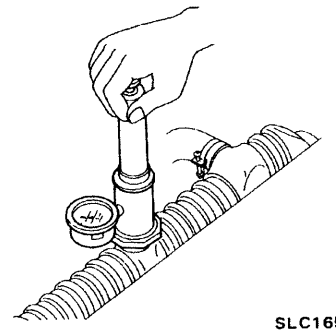

Check points
- Radiator core clogged
- Radiator core cracked
- Radiator hose connections
- Hoses damaged
- Heater hose connections
- Heater core damaged

O.K. → Check oil cooler area.

NOT O.K. → Retighten or replace.

OIL COOLER

Check oil cooler area.

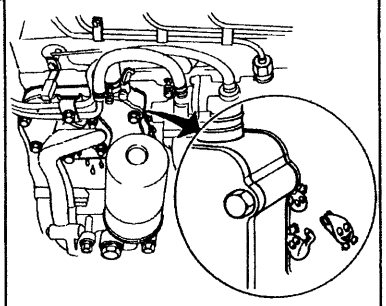

Check points
- Oil cooler damaged
- Oil cooler gasket damaged
- Oil cooler bolt loose
- Oil cooler hose cracked

NOT O.K. → Retighten or replace.

O.K. → Check mating area of cylinder block and head.

ENGINE COMPONENT

Check mating area of cylinder block and head.

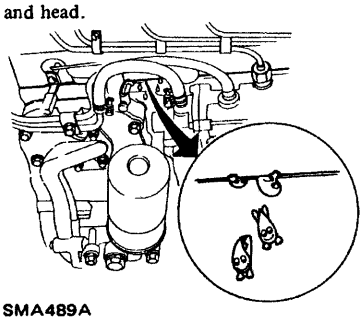

Check points
- Cylinder head cracked
- Cylinder head surface damaged
- Cylinder block surface damaged
- Gasket damaged
- Cylinder head bolt loose

O.K. → Check areas around blind plugs.

NOT O.K. → Retighten or replace.

Check areas around blind plugs.

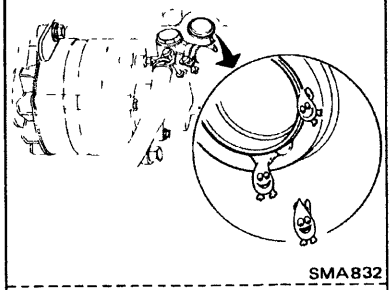

Check points
- Blind plug damaged

O.K. → Ⓐ

NOT O.K. → Replace.

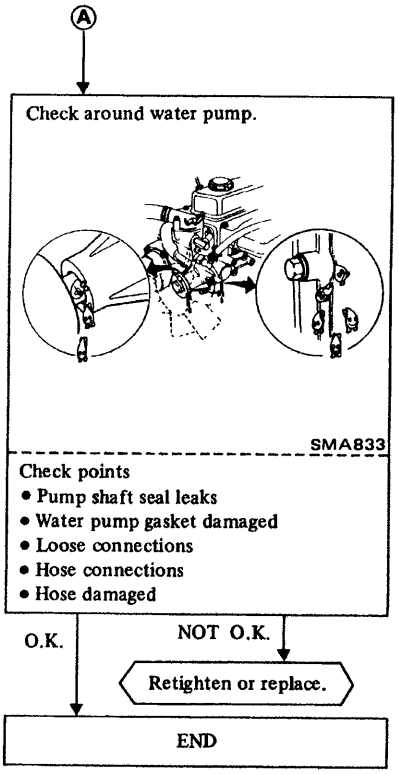
A
Check around water pump.
SMA833
Check points
• Pump shaft seal leaks
• Water pump gasket damaged
• Loose connections
• Hose connections
• Hose damaged
O.K.
NOT O.K.
Retighten or replace.
END

OIL LEAKAGE

ENGINE COMPONENT

Check rocker cover.

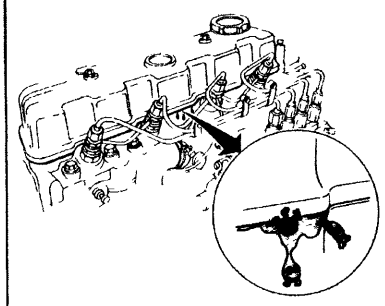

SMA834

Check points
- Rocker cover damaged
- Gasket damaged
- Rocker cover bolt loose

O.K. → NOT O.K. → Retighten or replace.

Checking mating area of cylinder block and cylinder head.

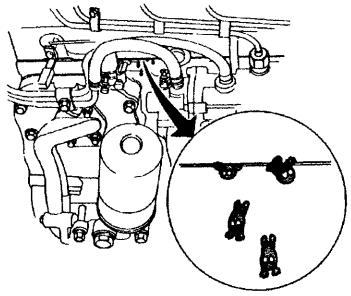

SMA490A

Check points
- Cylinder head surface damaged
- Cylinder block surface damaged
- Gasket damaged
- Cylinder head bolt loose

O.K. → NOT O.K. → Retighten or replace.

Check oil cooler mounting area.

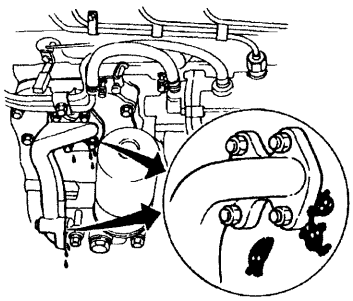

SMA491A

Check points
- Oil cooler damaged
- Oil cooler gasket damaged
- Oil cooler bolt loose

O.K. → NOT O.K. → Retighten or replace.

Check alternator vacuum pump for oil leakage.

O.K. → NOT O.K. → Repair or replace.

Check mating area of oil pan and cylinder block.

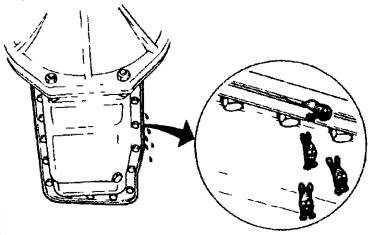

SMA837

Check points
- Oil pan damaged
- Oil pan gasket damaged
- Oil pan bolt loose

O.K. → NOT O.K. → Repair or replace.

Check oil pan drain plug.

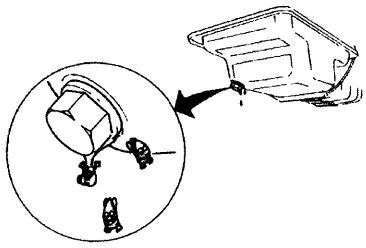

SMA838

Check points
- Drain plug loose
- Gasket damaged

O.K. → NOT O.K. → Retighten or replace.

Check engine front and rear side.

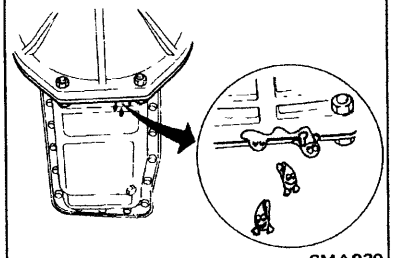

SMA839

Check points
- Check front and rear oil seal for damage.
- Cylinder block cracked

O.K. → NOT O.K. → Replace.

END

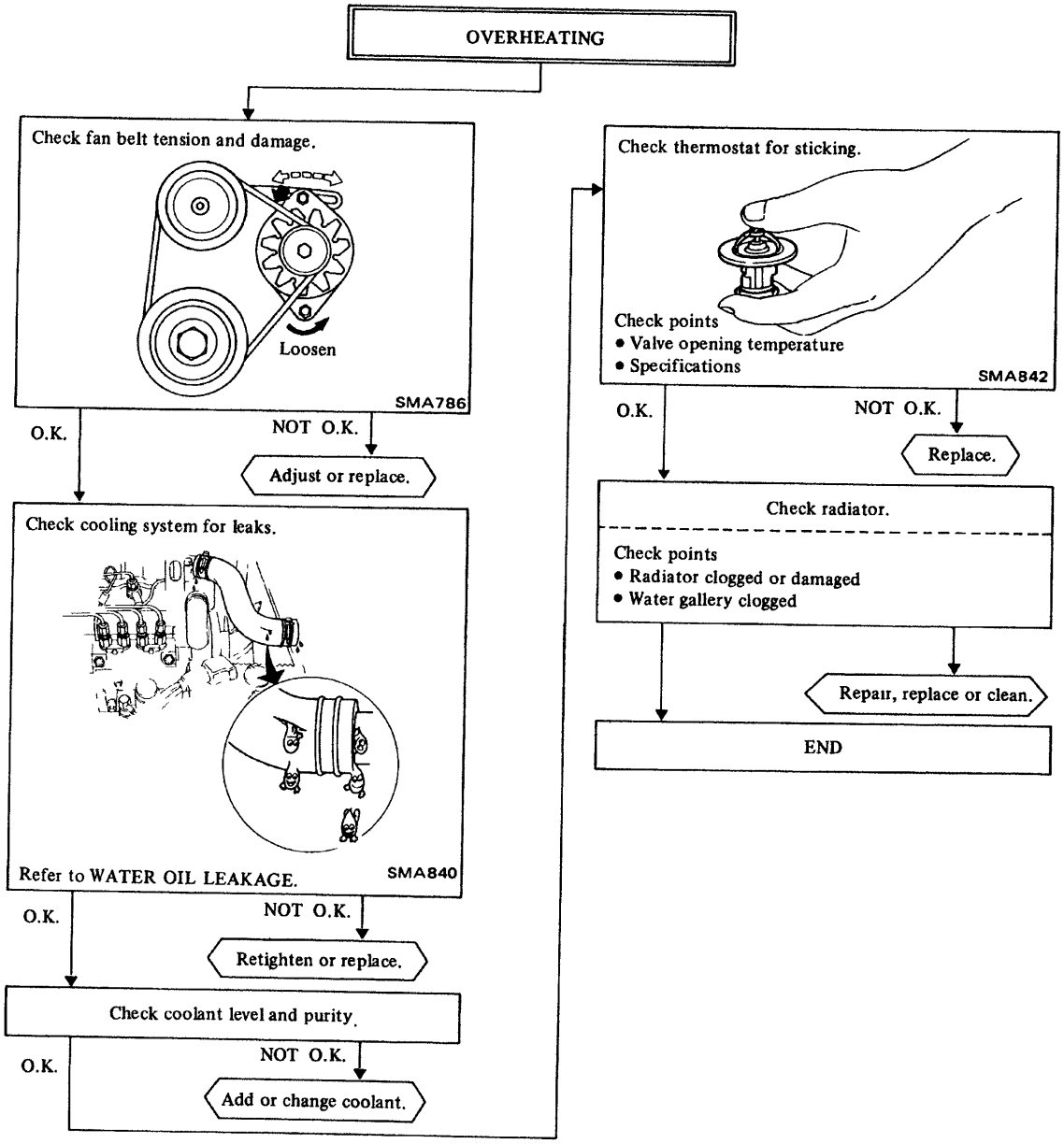
OVERHEATING
Check fan belt tension and damage.
Loosen
SMA786
O.K.
NOT O.K.
Adjust or replace.
Check cooling system for leaks.
Refer to WATER OIL LEAKAGE.
SMA840
O.K.
NOT O.K.
Retighten or replace.
Check coolant level and purity.
O.K.
NOT O.K.
Add or change coolant.
Check thermostat for sticking.
Check points
• Valve opening temperature
• Specifications
SMA842
O.K.
NOT O.K.
Replace.
Check radiator.
Check points
• Radiator clogged or damaged
• Water gallery clogged
Repair, replace or clean.
END

ENGINE DOES NOT STOP.

Will injection pump controller operate?

Check points

- Connections
- Connecting rod dislocated
- Check D.P.C. operation

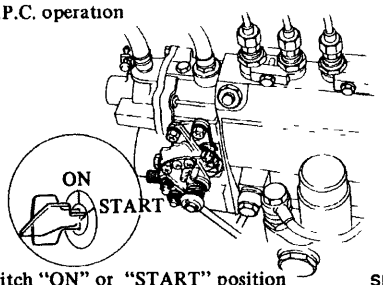

Ignition switch "ON" or "START" position SMA827

O.K. → Check for stuck accelerator linkage.

NOT O.K. → Replace.

Check for stuck accelerator linkage.

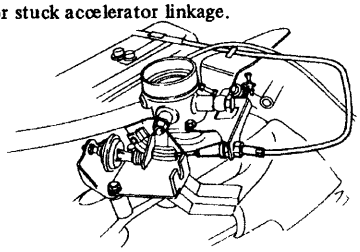

SMA844

O.K. → Check fuel cut solenoid valve. (For VE & C.A.V. type)

NOT O.K. → Repair or replace.

Check fuel cut solenoid valve. (For VE & C.A.V. type)

Check points.

- Circuit.
- Function.

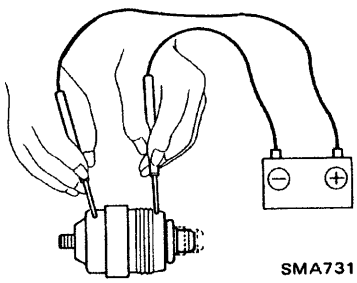

SMA731

O.K. → Repair or replace fuel injection pump.

NOT O.K. → Replace.

Repair or replace fuel injection pump.

ENGINE NOISY

MECHANICAL SYSTEM

Check engine idle speed.

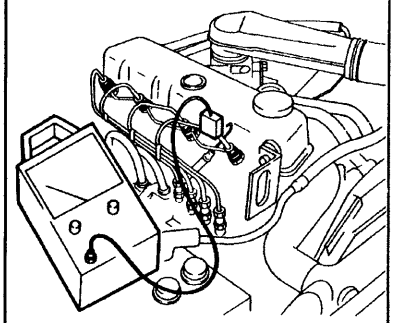

SMA051A

O.K. → Ⓐ

NOT O.K. → Adjust.

ELECTRICAL SYSTEM

Is noise emitted around alternator or vacuum pump?

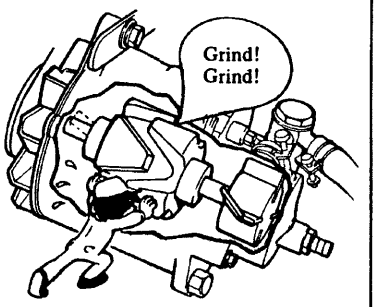

SMA845

YES. → Overhaul and repair or replace.

NO. → Ⓑ

COOLING SYSTEM

Is noise emitted around water pump?

Check points

- Fan belt slippage

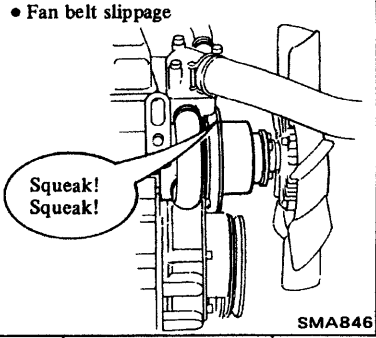

SMA846

NO. → Ⓒ

YES. → Repair or replace.

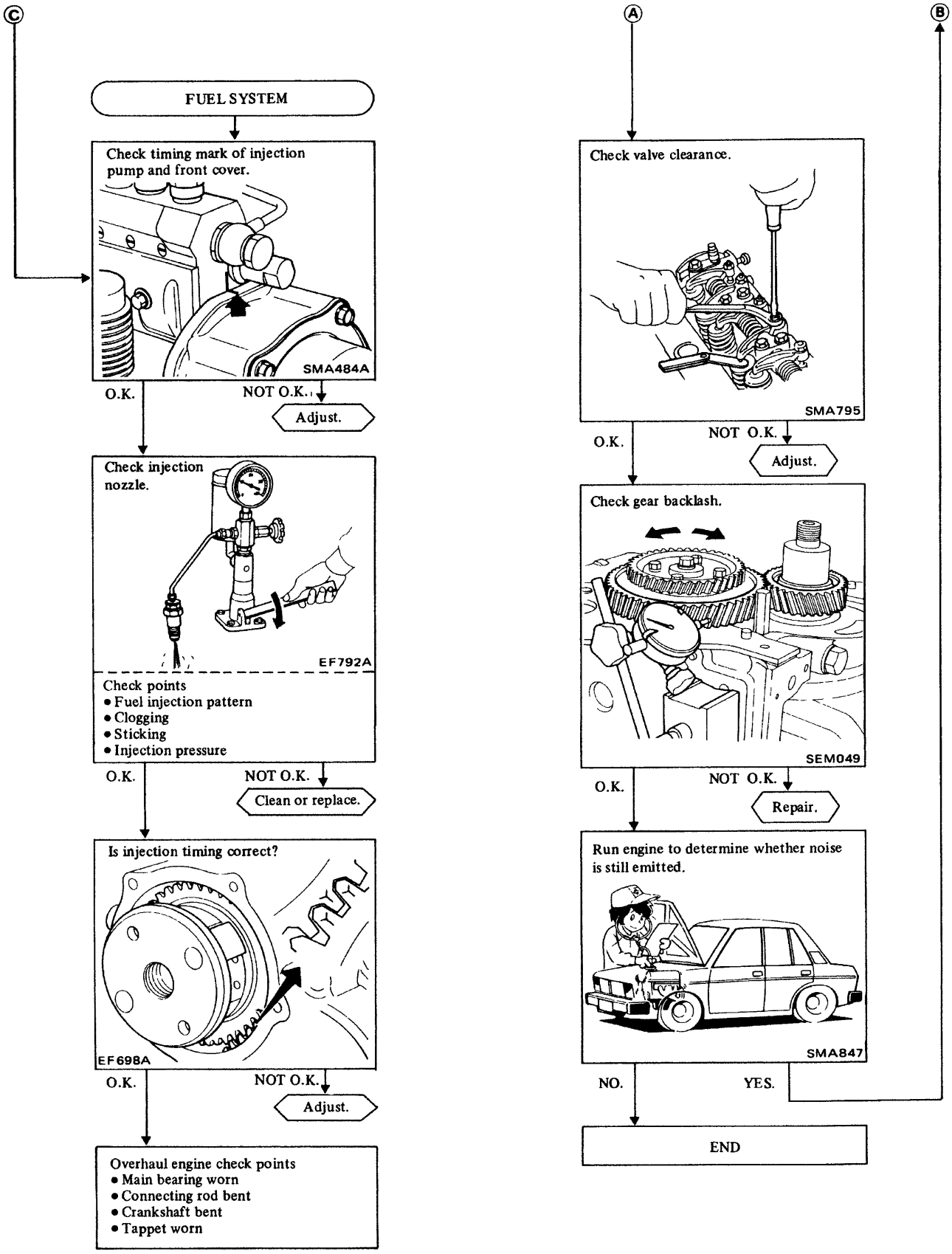
C
A
B
FUEL SYSTEM
Check timing mark of injection pump and front cover.
SMA484A
O.K.
NOT O.K.
Adjust.
Check injection nozzle.
EF792A
Check points
• Fuel injection pattern
• Clogging
• Sticking
• Injection pressure
O.K.
NOT O.K.
Clean or replace.
Is injection timing correct?
EF698A
O.K.
NOT O.K.
Adjust.
Overhaul engine check points
• Main bearing worn
• Connecting rod bent
• Crankshaft bent
• Tappet worn
Check valve clearance.
SMA795
O.K.
NOT O.K.
Adjust.
Check gear backlash.
SEM049
O.K.
NOT O.K.
Repair.
Run engine to determine whether noise is still emitted.
SMA847
NO.
YES.
END

SPECIAL SERVICE TOOLS

Tool number	Tool name
ED19600000	Compression gauge set 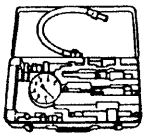
ST19320000	Oil filter wrench
KV11100300	Nozzle holder socket
KV11100400	Socket 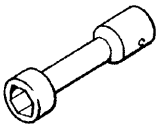

ENGINE MECHANICAL

SECTION EM

CONTENTS

EM

ENGINE COMPONENTS (Outer parts) . . . . . EM- 2
ENGINE COMPONENTS (Internal parts) . . . . . EM- 3
ENGINE DISASSEMBLY . . . . . EM- 4
PRECAUTIONS . . . . . EM- 4
DISASSEMBLY . . . . . EM- 4
DISASSEMBLING PISTON AND CONNECTING ROD . . . . . EM- 7
DISASSEMBLING CYLINDER HEAD . . . . . EM- 7
INSPECTION AND REPAIR . . . . . EM- 8
CYLINDER HEAD AND VALVE . . . . . EM- 8
CAMSHAFT AND CAMSHAFT BUSHING EM-11
CYLINDER BLOCK EM-12
CYLINDER LINER EM-12
PISTON, PISTON PIN AND PISTON RINGS EM-13
CONNECTING ROD EM-14
CRANKSHAFT EM-14
BEARINGS EM-15
CRANKSHAFT PILOT BUSHING EM-15
COMBUSTION CHAMBER EM-16
FLYWHEEL EM-16
GEAR TRAIN EM-16
FRONT PLATE EM-16
ENGINE ASSEMBLY EM-17
PRECAUTIONS EM-17
ASSEMBLING CYLINDER HEAD EM-17
ASSEMBLING PISTON AND CONNECTING ROD EM-17
ASSEMBLING ENGINE OVERALL EM-18
SERVICE DATA AND SPECIFICATIONS EM-23
INSPECTION AND ADJUSTMENT EM-23
TIGHTENING TORQUE EM-29
SPECIAL SERVICE TOOLS EM-31

ENGINE COMPONENTS (Outer parts)

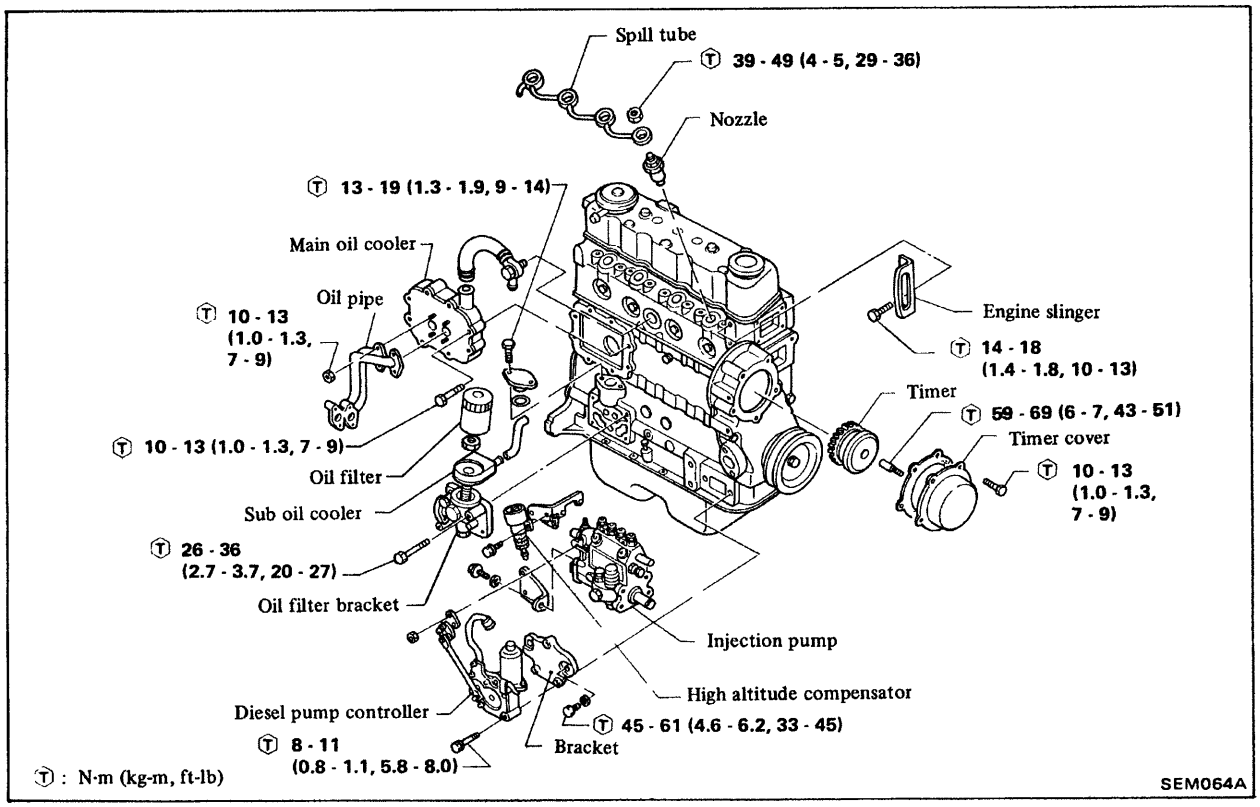

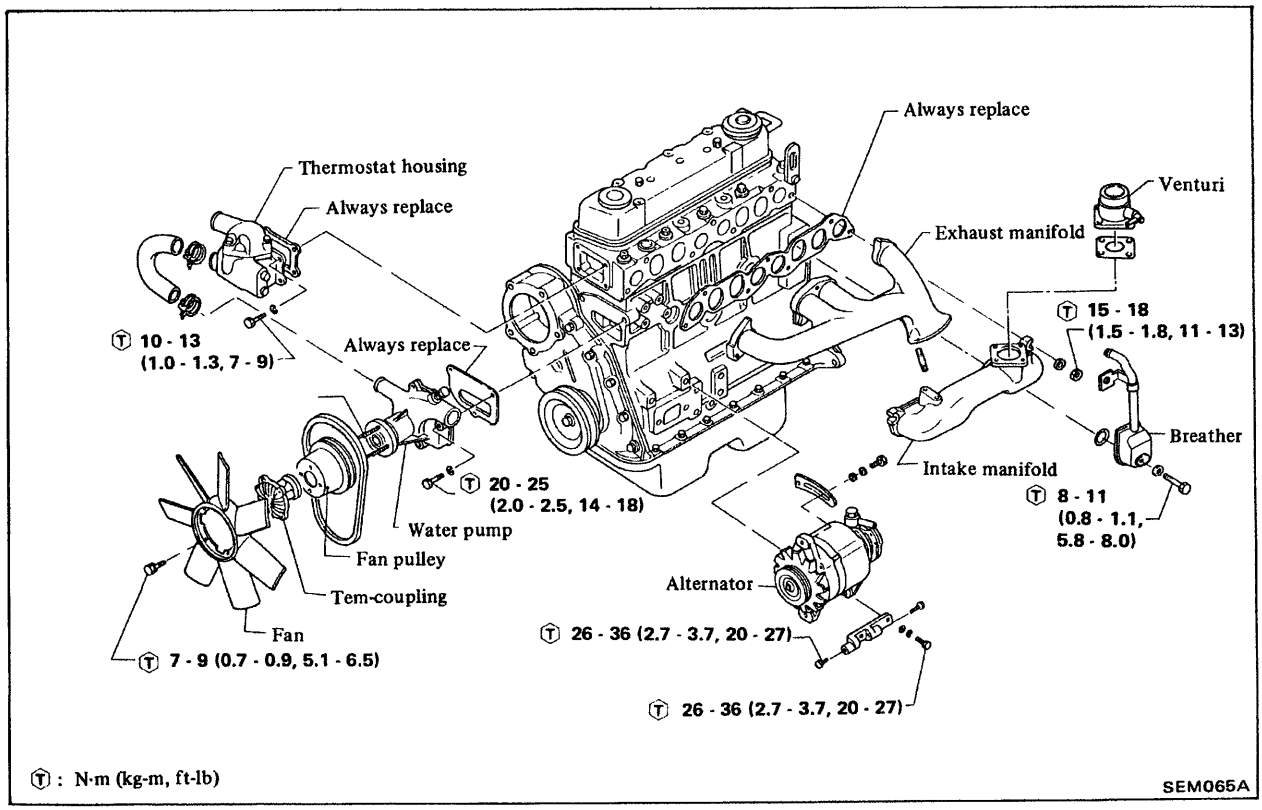

ENGINE COMPONENTS (Internal parts)

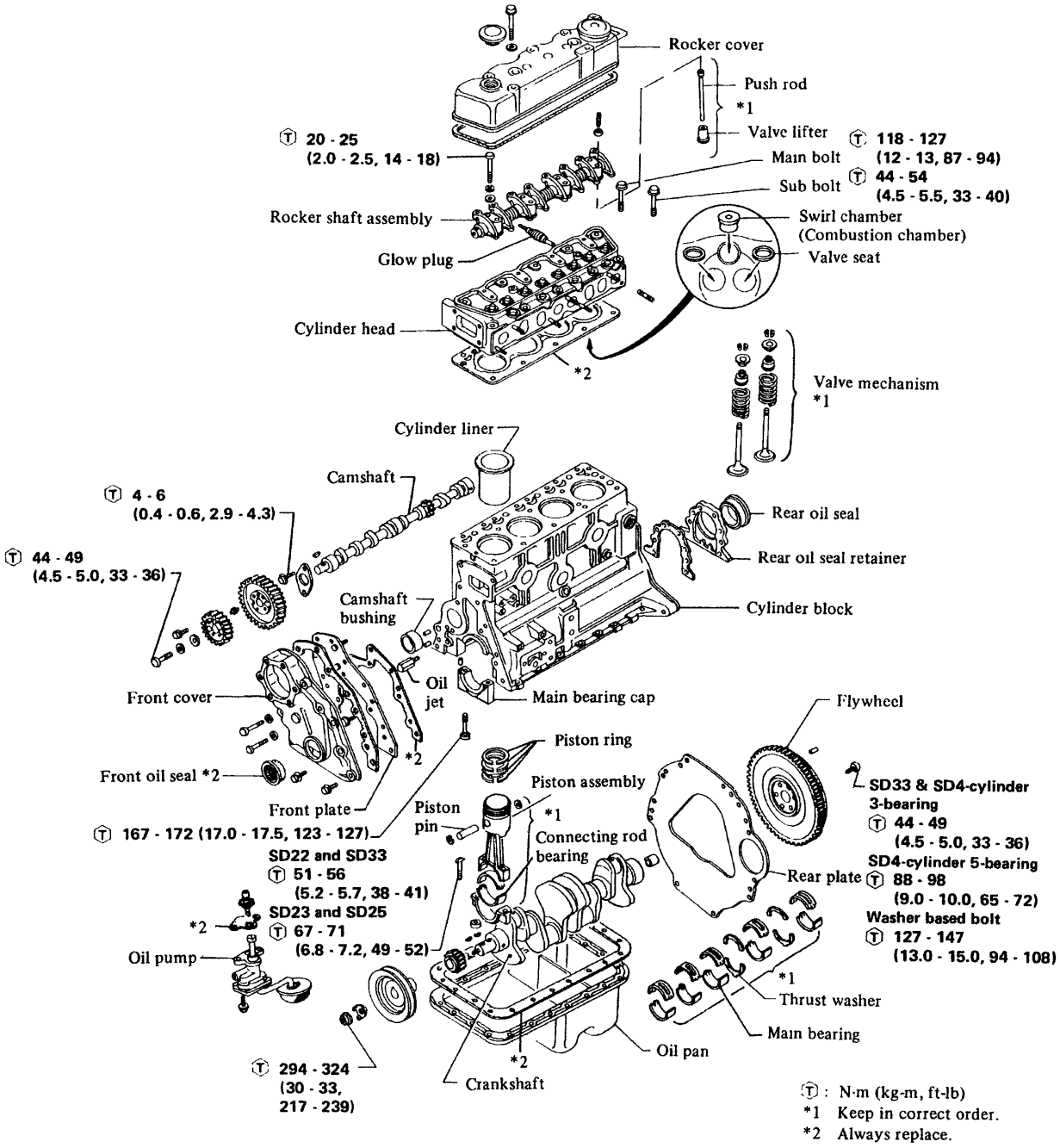

SEM048A

ENGINE DISASSEMBLY

PRECAUTIONS

Arrange the disassembled parts on the parts stand in accordance with their assembled locations, sequence, etc., so that the parts will be reassembled in their original locations. Place mating marks on the parts if necessary.

DISASSEMBLY

MOUNTING ENGINE ON WORK STAND

1. Remove rear and left side parts.
- Transmission assembly
- Clutch cover assembly
- Starter motor
- Engine mounting bracket
- Alternator assembly and fan belt
- Alternator bracket
- Intake manifold with venturi
- Exhaust manifold & engine slinger
- Breather assembly (SD 4-cylinder)

2. Install engine attachment on engine, using engine mounting bracket holes, air breather mounting hole and starter motor mounting holes (SD 4-cylinder). Install engine attachment on engine, using mounting bracket holes and cylinder block water drain cock hole (SD33).

3. Place both engine and attachment on engine stand.

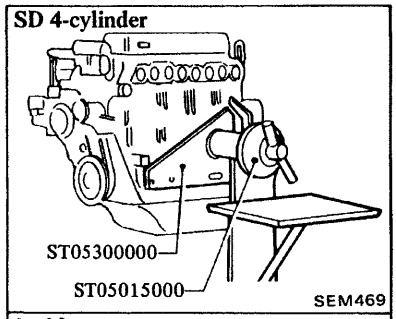

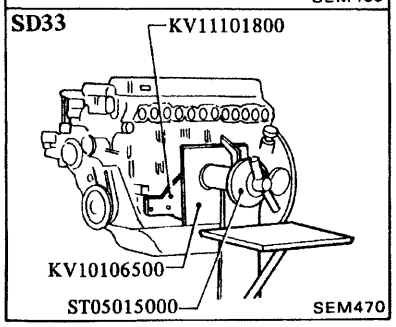

4. Install Tool to prevent crankshaft rotation (SD 4-cylinder).

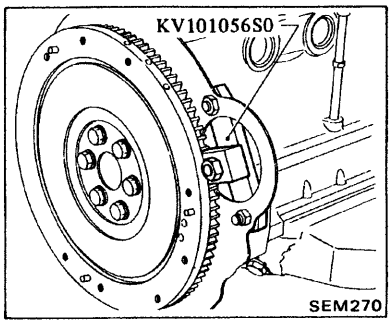

5. Drain engine oil and coolant.

REMOVING OUTER PARTS

1. Remove front side engine parts.
- Fan, Tem-coupling and fan pulley
- Alternator adjusting bar
- Thermostat housing
- Water pump

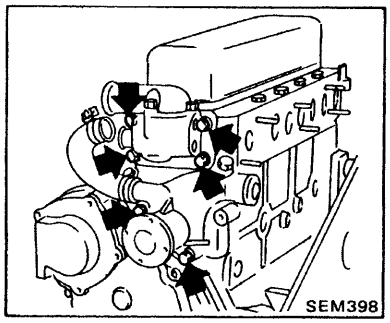

In-line pump

(1) Timer cover
(2) Timer

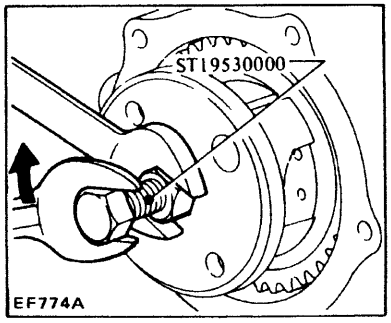

VE pump

(1) Drive gear cover
(2) Drive gear

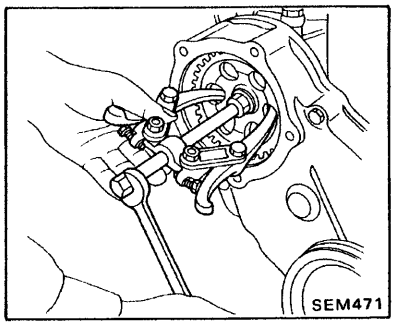

C.A.V.-D.P.A. pump

(1) Timing gear cover
(2) Feed pump camshaft
(3) Drive gear

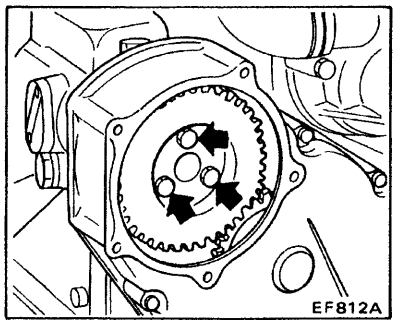

- Vacuum tube assembly

2. Remove right side parts.

(1) Fuel tube assembly

Use double wrench action.

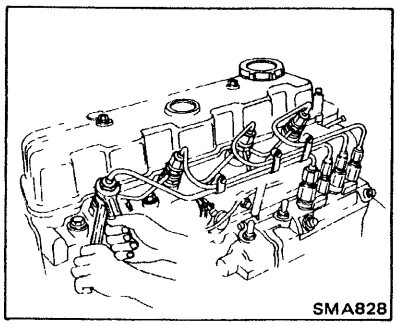

(2) Spill tube
(3) Injection nozzles
(4) Nozzle washers

Plug nozzle holes to prevent entry of dust and dirt.

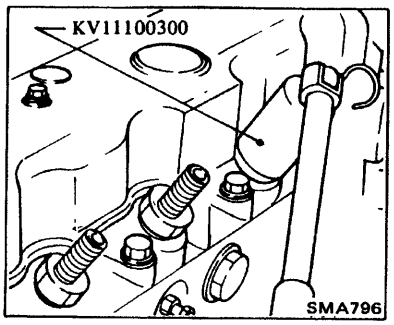

(5) Oil cooler
(a) SD 4-cylinder

- Oil filter using Tool.
- Remove injection pump rear bracket (if equipped) and oil pipe.

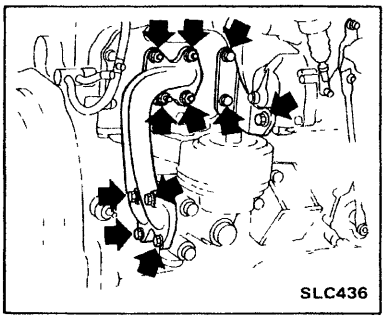

- Remove main and sub oil cooler (if equipped) assembly.

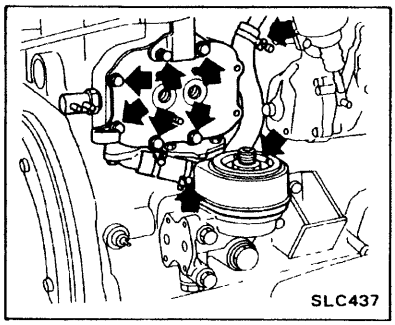

- Remove oil filter bracket.

(b) SD33

- Fuel filter using Tool
- Oil cooler and oil filter bracket with oil filter

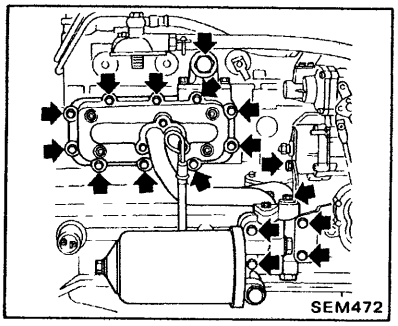

(6) Injection pump assembly

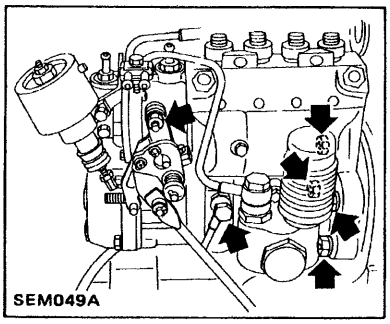

(7) Diesel pump controller assembly (In-line type only)

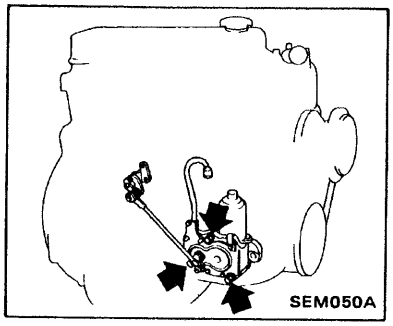

(8) Glow plug harness and oil cooler hose.

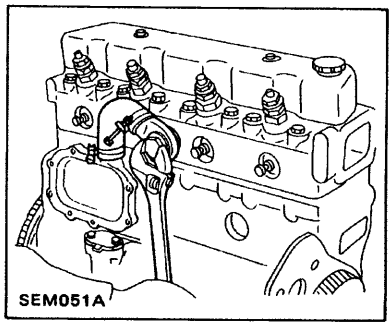

REMOVING INTERNAL PARTS

1. Remove rocker cover.
2. Remove rocker shaft assembly.

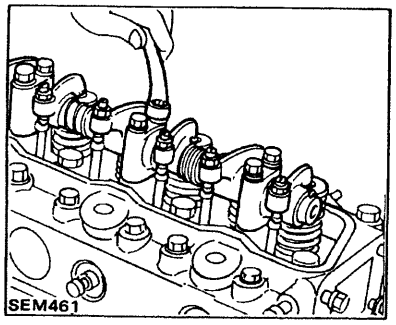

3. Remove push rods and keep them in correct order.

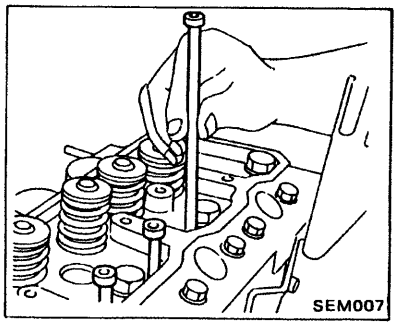

4. Remove cylinder head bolts in the sequence shown below and then remove cylinder head assembly and cylinder head gasket assembly.

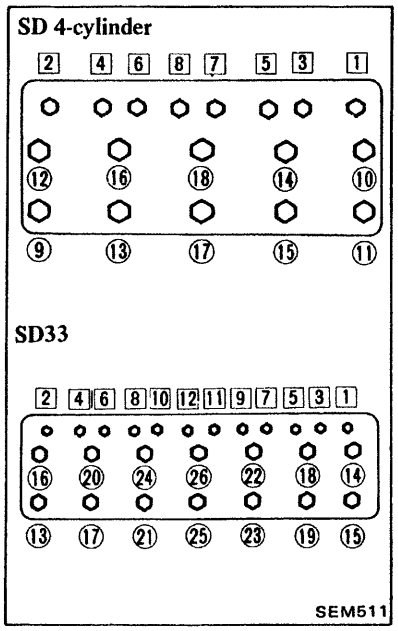

5. Remove oil pump.
(1) Remove spindle support and drive spindle.

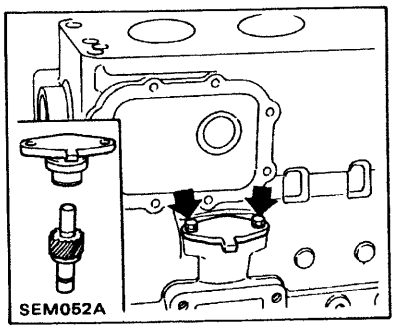

(2) Remove oil pan.
(3) Remove oil pump assembly.

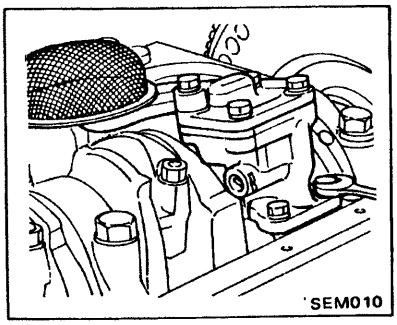

6. Remove flywheel.
(1) Straighten lock plates (if equipped).
(2) Place a wooden block between cylinder block and flywheel to prevent crankshaft from turning (SD33).
(3) Remove flywheel.
(4) Remove flywheel housing (SD33).

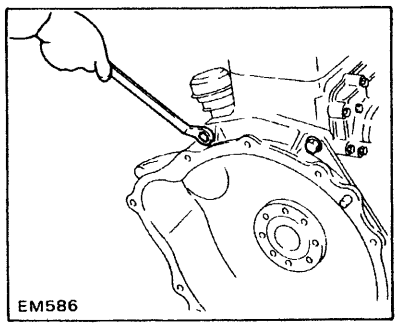

WARNING:
When removing flywheel, be careful not to drop it.

7. Crank pulley

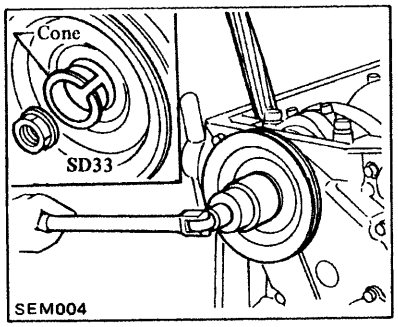

If it is difficult to remove cone, tap evenly around the periphery of the crankshaft pulley (with a brass rod and hammer), causing the cone to protrude beyond the pulley (SD33).

8. Remove front cover.
9. Remove camshaft gear.

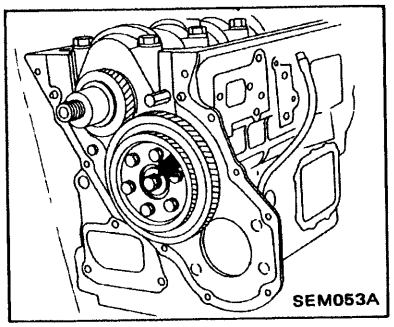

10. Remove camshaft.
(1) Remove camshaft locating plate.
(2) Bring crankshaft to upper side as shown below and remove camshaft.

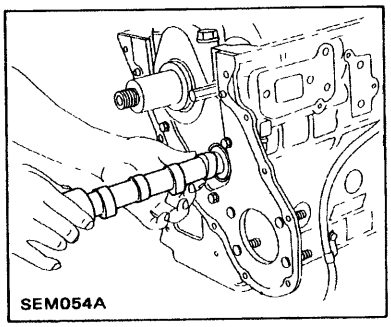

11. Remove valve lifters and **keep them in correct order.**
12. Remove crankshaft gear.
If it is difficult to extract crankshaft gear, use a suitable puller.

13. Remove front plate.

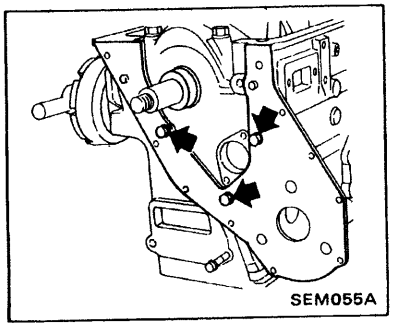

14. Remove oil jet bolts and then remove oil jet.

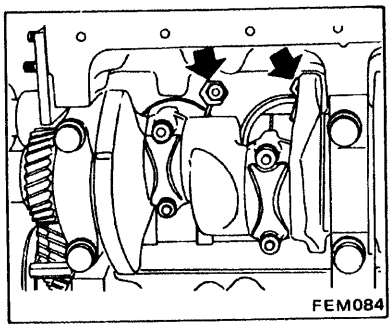

15. Pistons and connecting rod assembly
(1) Remove connecting rod caps and connecting rod bearings.
(2) Take pistons and connecting rods out of cylinder head side.

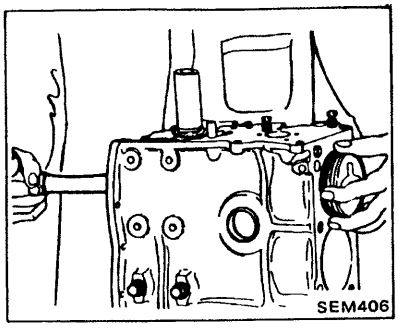

a. Piston can be easily removed by scraping carbon off top face of cylinder with a scraper.

b. Numbers are stamped on connecting rod and cap corresponding to each cylinder. Care should be taken to avoid a wrong combination including bearing.

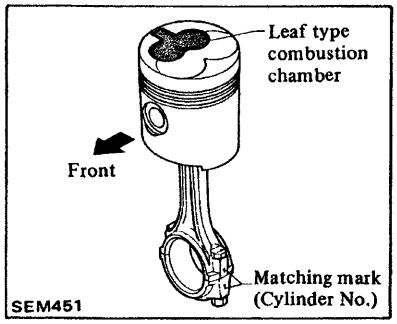

16. Crankshaft
(1) 5 bearings (SD 4-cylinder)
a) Remove rear oil seal assembly.

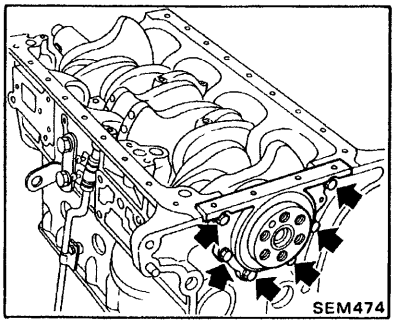

b) Remove main bearing cap with bearing.
c) Remove crankshaft and main bearings.

Keep main bearing in correct order.

(2) 3 bearings (SD22) & 4 bearings (SD33).
a) Remove main bearing cap with bearing.

Remove rear main bearing cap with Tool.

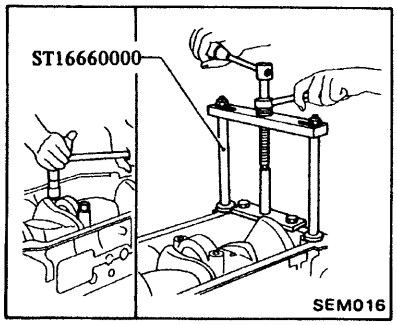

b) Remove crankshaft and main bearings.

Keep main bearing in correct order.

c) Remove oil seal from crankshaft and rear main cap.

DISASSEMBLING PISTON AND CONNECTING ROD

1. Remove piston ring with a ring remover.

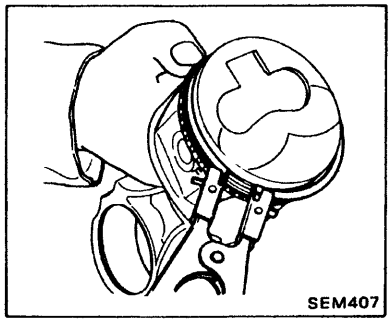

When removing piston rings, be careful not to scratch piston.

2. Remove piston snap rings, and immerse piston in oil of 80°C (176°F), and push out piston pin.

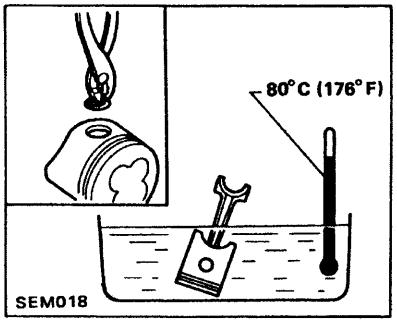

DISASSEMBLING CYLINDER HEAD

1. Remove glow plugs.

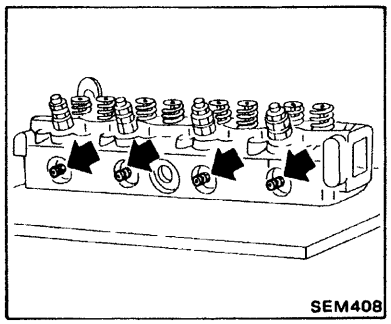

2. Remove valves, valve springs and relating parts using Tool.

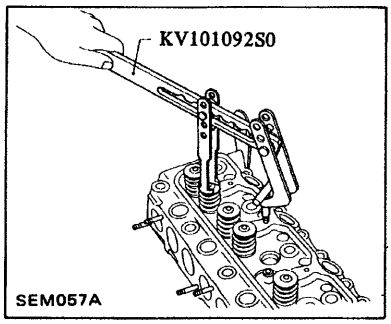

3. Remove valve stem seals.

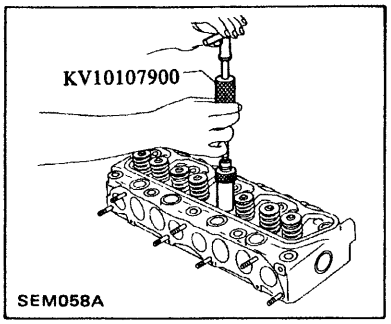

Keep valve spring and valves in correct order.

DISASSEMBLING ROCKER SHAFT

1. Remove cotter pin, washer and outer spring.
2. Remove valve rocker and rocker shaft bracket.

If it is difficult to remove rocker shaft bracket, immerse rocker shaft assembly in oil of 70°C (158°F) for a few minutes and then remove bracket.

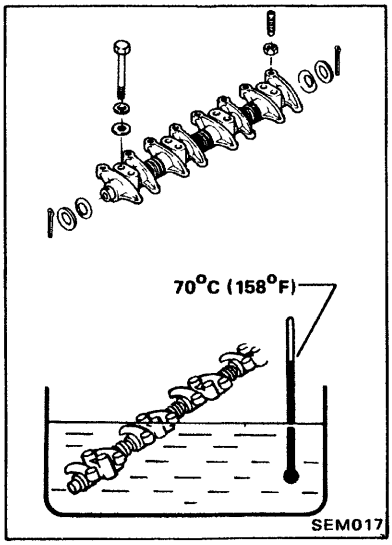

INSPECTION AND REPAIR

Clean all removed parts in cleaning oil, eliminating obstacles or dust/dirt from passages or holes. Also check these parts to make sure they are free from cracks or flaws.

CYLINDER HEAD AND VALVE

CHECKING CYLINDER HEAD MATING FACE

Measure the surface of cylinder head (on cylinder block side) for warpage.

Warpage of surface:
Less than
0.2 mm (0.008 in)

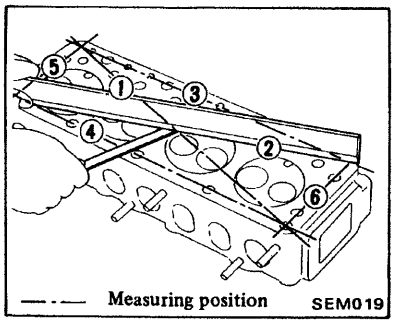

If beyond the specified limit, correct with a surface grinder.

Cylinder head height should be greater than 89.7 mm (3.531 in) after surface has been ground.

VALVE

1. Check each of the intake and exhaust valve for worn, damaged or deformed valve stems. Correct or replace the valve that is faulty.

For standard size of valve, refer to S.D.S.

2. Valve face or valve stem end surface should be refaced by using a valve grinder.

Valve face angle:
45° - 45°30'

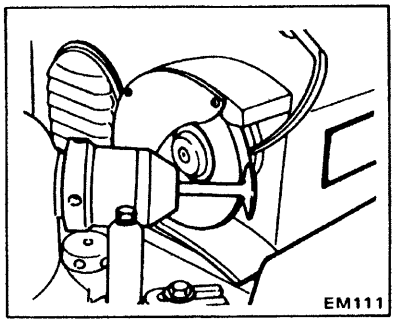

VALVE LIFTER AND PUSH ROD

Valve lifter

1. Check valve lifters for excessive wear on the face.
2. Replace with new ones if worn beyond repair.

a. Valve lifter end should be smooth.
b. Valve lifter to lifter hole clearance:

Standard
0.016 - 0.052 mm
(0.0006 - 0.0020 in)
Limit
Less than
0.10 mm (0.0039 in)

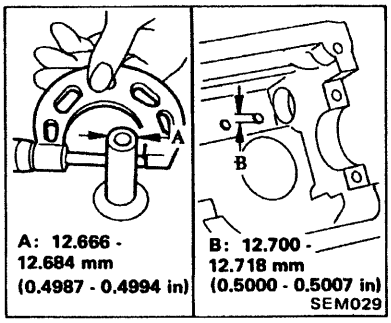

Push rod

1. Inspect push rod for excessive wear on the face.
2. Replace if worn or damaged beyond repair.
3. Check push rod for bend using a dial gauge.

Maximum allowable bend:
Less than
0.5 mm
(0.020 in)

VALVE SPRING

1. Check valve spring for squareness using a steel square and surface plate. If spring is out of square "S" more than specified limit, replace with new ones.

Out of square ("S"):
Less than
1.3 mm (0.051 in)

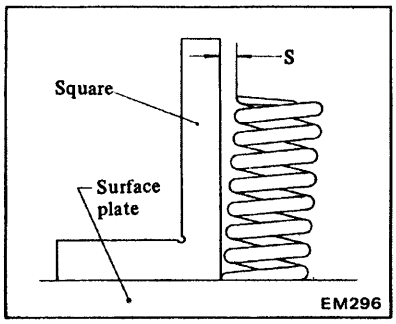

2. Measure free length and tension of spring. If measured value exceeds specified limit, replace spring.

Refer to S.D.S.

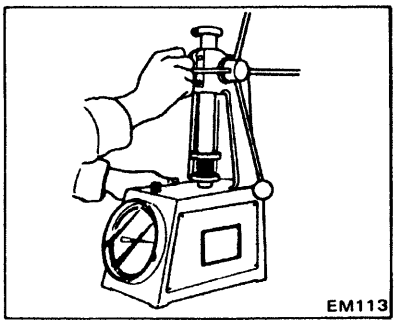

VALVE ROCKER ASSEMBLY

1. Check valve rockers, brackets and rocker shafts for scoring, wear or distortion. Replace if necessary.

2. Check clearance between valve rockers and rocker shaft. If specified clearance is exceeded, replace affected valve rockers or shafts.

Specified clearance:
Standard
0.02 - 0.05 mm
(0.0008 - 0.0020 in)
Limit
Less than
0.15 mm (0.0059 in)

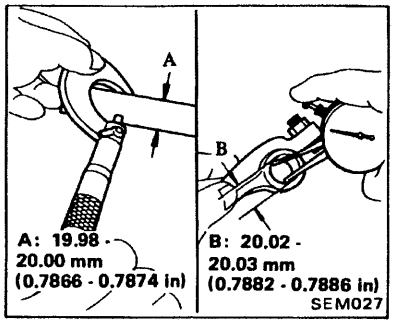

3. Check rocker shaft bend at its center. If bend is within specified limit, straighten it; and if it is greater than specified limit, replace rocker shaft.

Rocker shaft bend
(Total indicator reading):
Standard
0 - 0.1 mm (0 - 0.004 in)
Limit
Less than
0.3 mm (0.012 in)

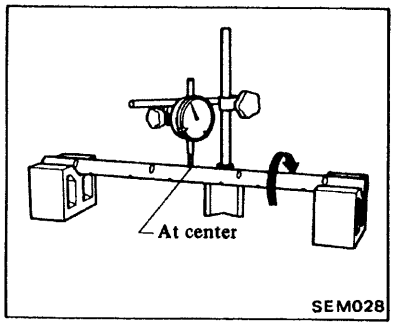

VALVE GUIDE (SD23 and SD25)

Measure the clearance between valve guide and valve stem. If the clearance exceeds the specified limit, replace the worn parts or both valve and valve guide. In this case, it is essential to determine if such a clearance has been caused by a worn or bend valve stem or by a worn valve guide.

Determining clearance

1. Precise method
(1) Measure diameter of valve stem in three places: top, center, and bottom.
Refer to S.D.S.

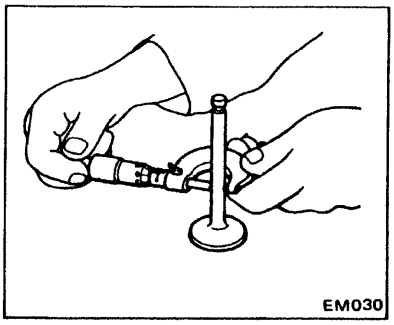

(2) Measure valve guide bore at center using telescope hole gauge.
(3) Subtract the highest reading of valve stem diameter from valve guide bore to obtain the stem to guide clearance.

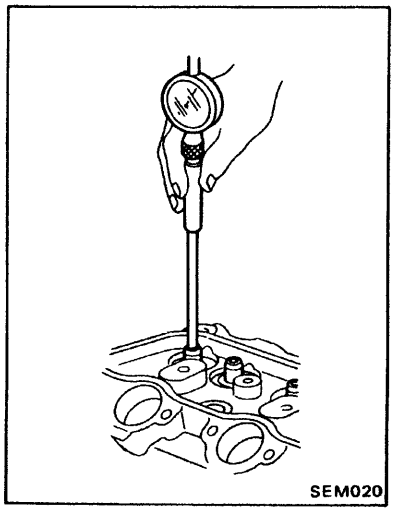

Stem to guide clearance:
Standard
Intake
0.015 - 0.045 mm
(0.0006 - 0.0018 in)
Exhaust
0.04 - 0.07 mm
(0.0016 - 0.0028 in)
Max. tolerance
Intake
Less than
0.15 mm (0.0059 in)
Exhaust
Less than
0.20 mm (0.0079 in)

2. Expedient method
Pry the valve in a lateral direction, and measure the deflection at stem tip with dial gauge.

Stem to guide clearance is 1/2 of measured value.

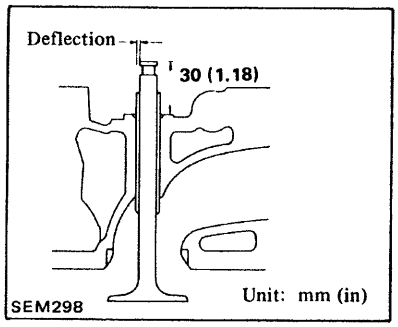

Valve should be moved in parallel with rocker arm. (Generally, a large amount of wear occurs in this direction.)

Replacement of valve guide

To remove old guides, use a press (under a 2-ton pressure) or a hammer, and Tool.
1. Drive them out toward rocker cover side using Tool.
Heating the cylinder head will facilitate the operation.

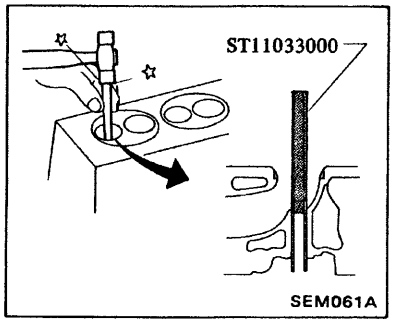

2. Install new guide onto cylinder head until the guide projects out 13 mm (0.51 in).

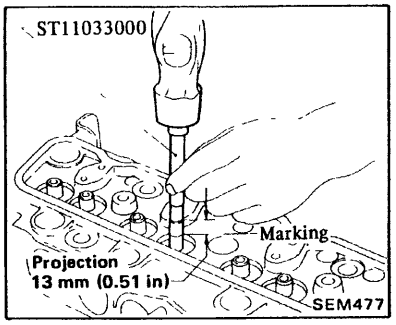

3. Ream the bore using Tool ST11032000.

Reaming bore:
8.000 - 8.015 mm
(0.3150 - 0.3156 in)

VALVE STEM HOLE (SD22 and SD33)
(Cylinder head)

Measure clearance between valve stem hole (cylinder head) and valve stem. If clearance exceeds specified limit, replace worn parts.

Determining clearance

Refer to Valve Guide for determining clearance check method.

1. If valve stem clearance exceeds limit, grind valve stem hole and use oversize intake and exhaust valves.

Select oversize valve stem so that clearance between valve stem hole and stem is less than 0.15 mm (0.0059 in) at intake side and less than 0.20 mm (0.0079 in) at exhaust side.

Unit: mm (in)

Grinding valve stem hole diameter	Diameter of oversize valve stem to be used
8.200 - 8.215 (0.3228 - 0.3234)	8.2 (0.323)
8.400 - 8.415 (0.3307 - 0.3313)	8.4 (0.331)

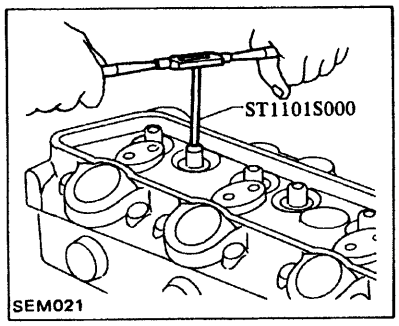

VALVE SEAT INSERTS

1. Check contact width and state of contact between valve and valve seat.

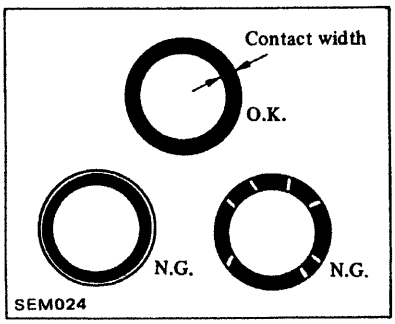

2. Reface valve seat with valve seat cutter.

Valve seat surface:
Refer to S.D.S.

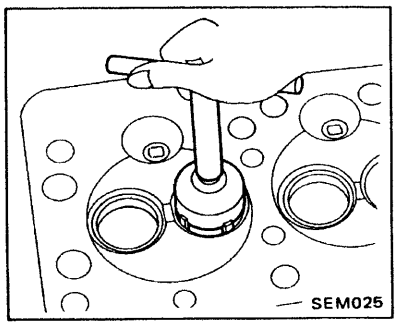

Valve seat insert replacement

1. Remove valve seats with Tool.

Place a copper seat between contact surface of Tool and cylinder head.

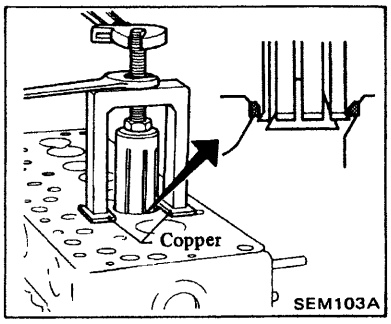

2. Install new valve seats.

a. Eliminate the old staked lugs (Exhaust side).

b. Oversize exhaust valve seats are available as 0.2 and 0.4 mm (0.008 and 0.016 in).

(1) Place new valve seats dry ice and allow it to cool for five minutes.

WARNING:
Do not touch cooled valve seats with bare hand.

(2) Heat cylinder head to 80°C (176°F).

(3) Install cooled valve seats on cylinder head with Tool.

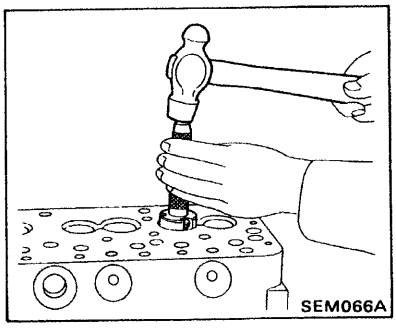

(4) Stake exhaust valve seat at five places with punch.

When staking valve seat, select different places than those staked before.

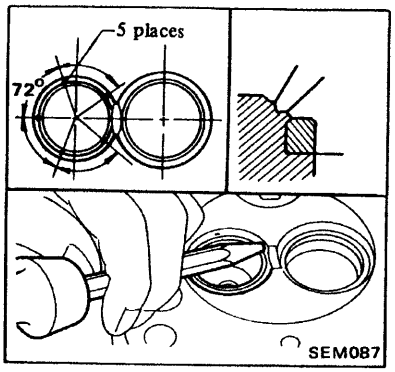

MEASURING CYLINDER HEAD-TO-VALVE DISTANCE

Measure distance from cylinder head surface to intake and exhaust valves. If specified distance is exceeded, replace valve(s) or valve seat(s).

Specified distance:
Standard
Intake
0.275 - 0.675 mm
(0.0108 - 0.0266 in)
Exhaust
0.305 - 0.695 mm
(0.0120 - 0.0274 in)
Limit
Less than
1.25 mm (0.0492 in)
for intake and exhaust valves

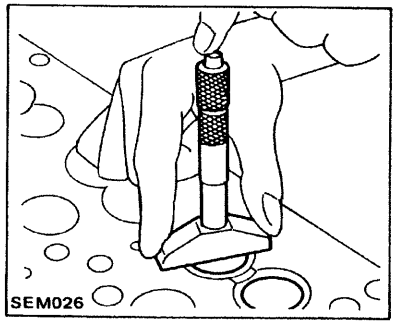

CAMSHAFT AND CAMSHAFT BUSHING

CAMSHAFT BUSHING CLEARANCE

Measure inside diameter of camshaft bushing with an inside dial gauge and outside diameter of camshaft journal with a micrometer.

Clearance between camshaft and bushing (A–B):
Standard
Front
0.024 - 0.102 mm
(0.0009 - 0.0040 in)
Center (SD 4-cylinder), Nos. 2 and 3 (SD33)
0.037 - 0.115 mm
(0.0015 - 0.0045 in)
Rear
0.024 - 0.102 mm
(0.0009 - 0.0040 in)
Limit
Less than
0.15 mm (0.0059 in)

Camshaft bushing undersize:
0.25 mm (0.0098 in),
0.50 mm (0.0197 in),
0.75 mm (0.0295 in)

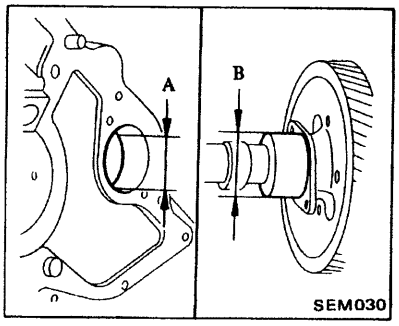

REPLACING CAMSHAFT BUSHING

1. Remove rear plug.

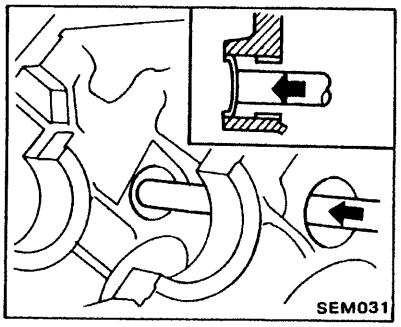

2. Remove camshaft bushing with Tool.

Remove bushing from front side of engine.

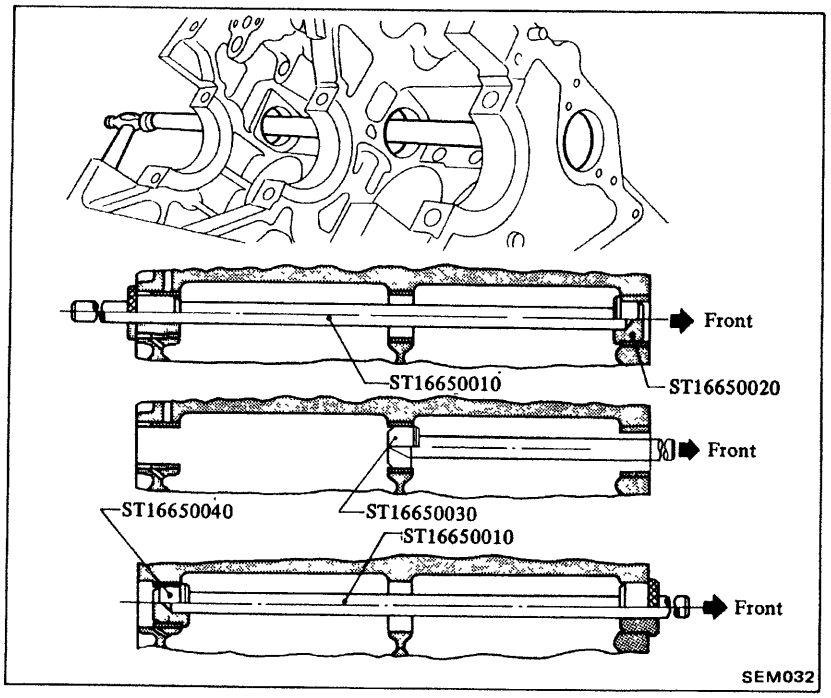

3. Install new bushing with Tool, following in the reverse order of removal.

a. Align cylinder block oil passage hole and bushing oil hole.
b. Install bushing with beveled end facing front.

4. Check camshaft bushing clearance.
5. Install new rear plug with a drift.

Apply liquid sealer.

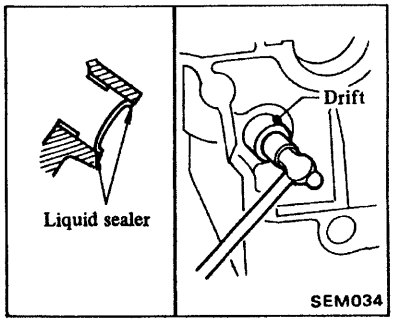

CAMSHAFT ALIGNMENT

1. Check camshaft journal and cam surface for bend, wear or damage.
If fault is beyond limit, replace.
2. Check camshaft bend **at center journal.**
If bend is greater than specified limit, repair or replace camshaft.

Camshaft bend
(Total indicator reading):
Standard
0 - 0.03 mm (0 - 0.0012 in)
Limit
Less than 0.06 mm (0.0024 in)

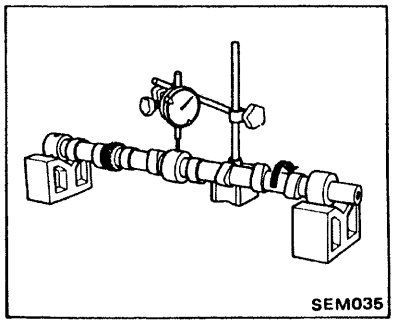

3. Measure camshaft end play between locating plate and gear. If beyond the specified limit, replace camshaft locating plate.

Camshaft end play:
Standard
0.08 - 0.28 mm
(0.0031 - 0.0110 in)
Limit
Less than 0.5 mm (0.020 in)

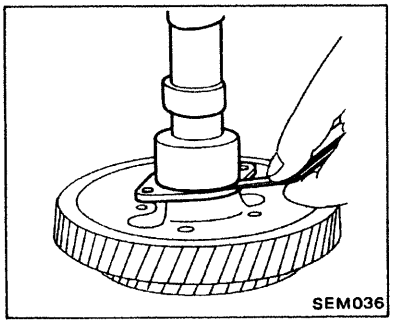

4. Measure camshaft cam height. If beyond the specified limit, replace camshaft.

Cam height limit:
36.8 mm (1.449 in)

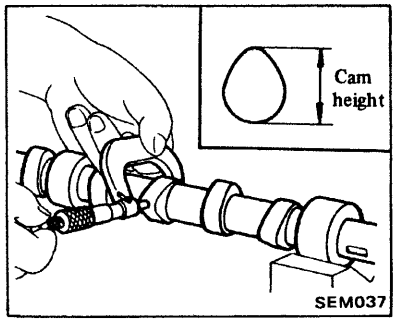

CYLINDER BLOCK

1. Check cylinder block for cracks or flaws.
2. Check cylinder block warpage with cylinder liner removed. If beyond the limit, correct with a surface grinder.

Warpage of cylinder block surface (Without cylinder liner):
Longitudinal
Less than 0.10 mm (0.0039 in)
Transverse direction
Less than 0.02 mm (0.0008 in)

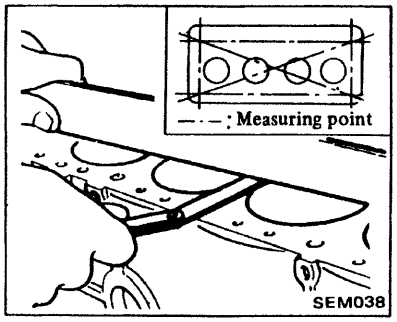

Surface grinding limit:
Height from upper face of cylinder block to crankshaft centerline should be greater than specified limit.

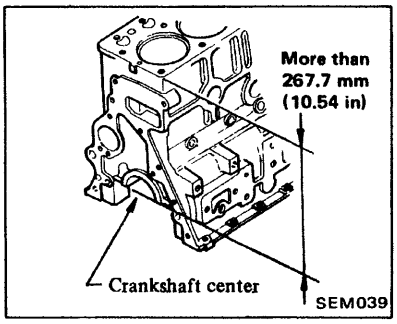

CYLINDER LINER

1. Check cylinder liner wear by means of bore diameter.

Cylinder liner bore wear limit:
Less than 0.3 mm (0.012 in)
Bore standard:
SD22 and SD33
82.995 - 83.025 mm
(3.2675 - 3.2687 in)
SD23 and SD25
89.000 - 89.035 mm
(3.5039 - 3.5053 in)

2. Measure cylinder liner bore for out-of-round and taper with a bore gauge. If beyond the limit, replace cylinder liner.

Out-of-round (X–Y):
Standard
0.02 mm (0.0008 in)
Taper (A–B):
Standard
0.02 mm (0.0008 in)

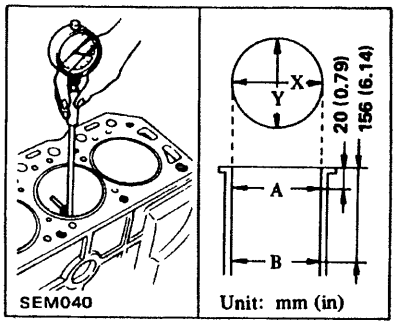

3. Check amount of projection of cylinder liner.

Cylinder liner projection:
Standard
0.02 - 0.09 mm
(0.0008 - 0.0035 in)
Deviation of each cylinder
Less than 0.05 mm (0.0020 in)

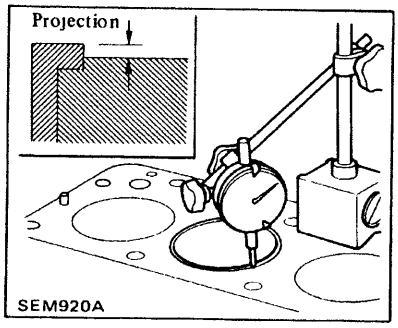

CYLINDER LINER REPLACEMENT

1. Remove cylinder liner with Tool.

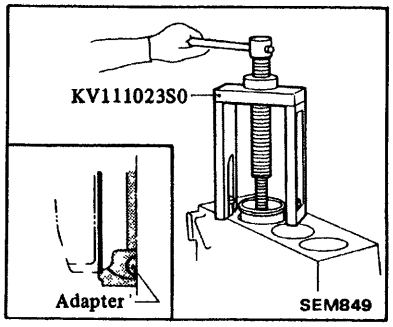

2. Install cylinder liner with Tool or press stand.

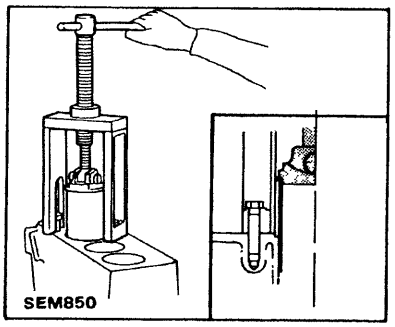

3. Check amount of projection of cylinder liner.

PISTON, PISTON PIN AND PISTON RINGS

1. Check for damage, scratches and wear. Replace if such a fault is detected.
2. Check piston outside diameter.
- 5-ring piston

Measure piston outside diameter at 50.5 mm (1.988 in) from piston head. If beyond the limit, replace piston.

Piston wear limit:
Less than 0.15 mm (0.0059 in)
Piston outside diameter:
Standard
82.845 - 82.885 mm
(3.2616 - 3.2632 in)

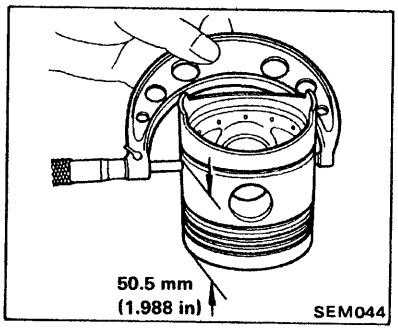

- 3-ring piston

Measure piston outside diameter at 70.0 mm (2.756 in) from piston head. If beyond the limit, replace piston.

Piston wear limit:
Less than 0.15 mm (0.0059 in)

Piston outside diameter:
Standard
SD22 and SD33
82.905 - 82.945 mm
(3.4998 - 3.5014 in)
SD23 and SD25
Only for 720 model
88.905 - 88.945 mm
(3.5002 - 3.5018 in)
For other models
88.895 - 88.935 mm
(3.4998 - 3.5014 in)

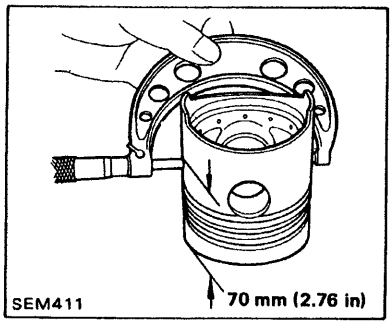

3. Measure Piston ring to ring groove clearance. If beyond the limit, replace piston rings or piston.

Piston ring to groove clearance (side clearance):
Limit

Unit: mm (in)

Ring No.	5 rings	3 rings
1	Less than 0.5 (0.020)	Less than 0.5 (0.020)
2	Less than 0.3 (0.012)	Less than 0.3 (0.012)
3		Less than 0.15 (0.0059)
4	Less than 0.15 (0.0059)	–
5		

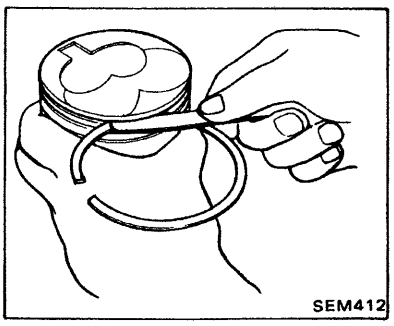

4. Measure piston ring end gap by securely placing piston ring in cylinder liner at position where cylinder bore wear is least. If beyond the maximum limit, replace piston ring.

Maximum ring gap:
1.5 mm (0.059 in)

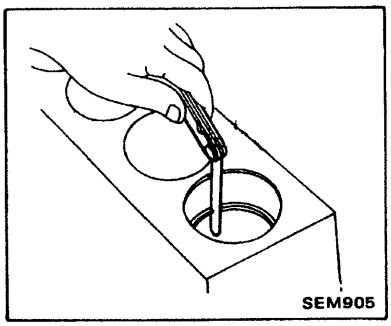

5. Measure piston pin to piston clearance. If beyond the limit, replace piston pin and piston.

Piston pin to piston clearance (A–B):
Limit

Unit: mm (in)

5 rings & 3 rings
Less than 0.003 (0.0001)

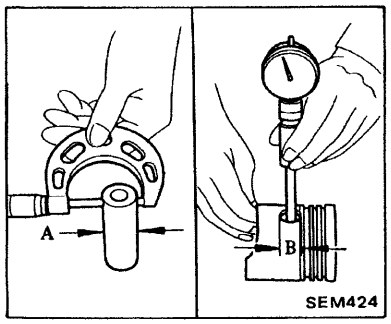

CONNECTING ROD

1. If a connecting rod has any flaw on both slides of the thrust face and the large end, correct or replace it.
2. Check connecting rod for bend or torsion using a connecting rod aligner. If bend or torsion exceeds the limit, correct or replace.

Bend and torsion
[per 100 mm (3.94 in) length]:
Standard

Bend
Less than 0.05 mm (0.0020 in)
Torsion
Less than 0.05 mm (0.0020 in)

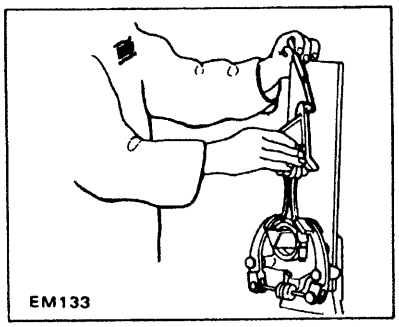

REPLACEMENT OF CONNECTING ROD SMALL END BUSHING

1. Drive in the small end bushing until it is flush with the end surface of the rod.

Be sure to align the oil holes.

2. After driving in the small end bushing, finish the bushing to the inside diameter specified by maintenance standard.

Small end bushing inside diameter
Maintenance standard:
26.025 - 26.038 mm (1.0246 - 1.0251 in)

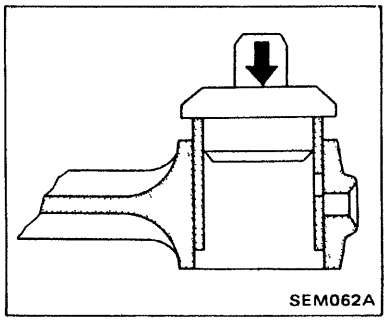

CRANKSHAFT

1. Check journal and crank pin for flaws or clogged oil passage. If necessary, replace crankshaft.

2. Check journal and crank pin for out-of-round and taper with a micrometer.

If beyond the specified value, replace or regrind crankshaft.

After regrinding crankshaft, use suitable undersize main bearing.

Out-of-round (X-Y):
Less than 0.02 mm (0.0008 in)
Taper (A-B):
Less than 0.02 mm (0.0008 in)

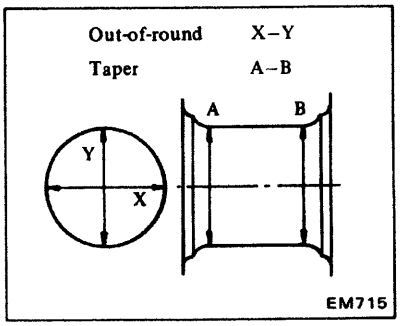

When regrinding crankshaft, finish fillets as follows:

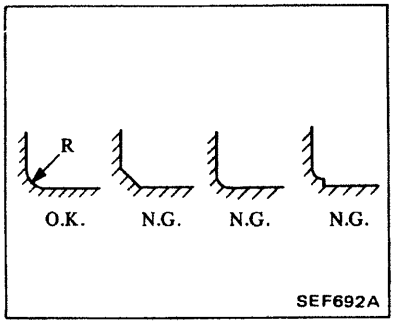

R Crank journal: 3.0 mm (0.118 in)
Crank pin: 3.5 mm (0.138 in)

Do not attempt to cut counterweight of crankshaft.

3. Check crankshaft bend **on center journal**. If beyond the specified value, replace or repair.

Crankshaft bend
(Total indicator reading):
Standard
0 - 0.06 mm (0 - 0.0024 in)

Limit
Less than
0.2 mm (0.008 in)

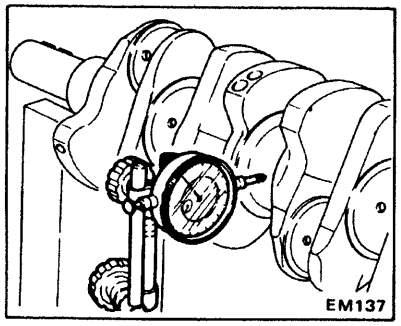

BEARINGS

MAIN BEARING OIL CLEARANCE

1. Thoroughly clean all bearings, journal and caps, and check for scratches, melt, scores or wear. Replace bearings, if any fault is detected.
2. Set main bearings on cylinder block and install crankshaft.
3. Set plastigage at each journal.

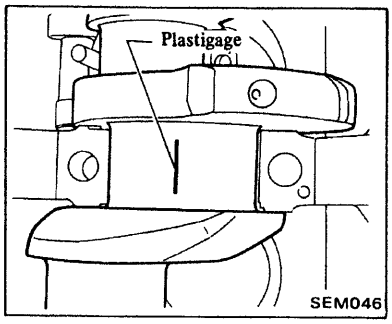

4. Install main bearing caps with main bearings and tighten.

Do not turn crankshaft.

Ⓣ : Main bearing cap bolt:
167 - 172 N·m
(17.0 - 17.5 kg-m,
123 - 127 ft-lb)

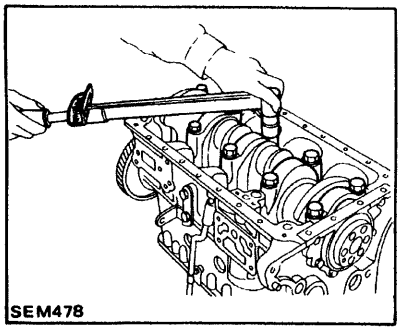

5. Remove cap and measure main bearing oil clearance with plastigage. If clearance is not within specification, replace bearings.

Main bearing oil clearance:
Standard
0.035 - 0.093 mm
(0.0014 - 0.0037 in)
Limit
Less than
0.15 mm (0.0059 in)

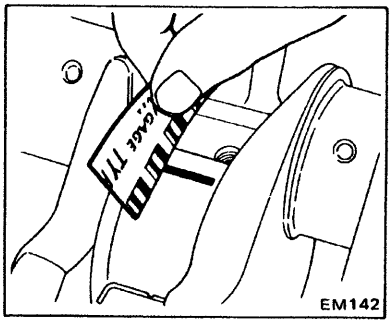

CONNECTING ROD BEARING OIL CLEARANCE

Measure connecting rod bearing oil clearance in same manner as main bearing oil clearance.

If clearance is not within specification, replace bearings.

Do not turn connecting rod or crankshaft.

Ⓣ : Connecting rod cap:
SD22 and SD33
51- 56 N·m
(5.2 - 5.7 kg-m,
38 - 41 ft-lb)
SD23 and SD25
67 - 71 N·m
(6.8 - 7.2 kg-m,
49 - 52 ft-lb)
Connecting rod bearing oil clearance:
Standard
0.035 - 0.087 mm
(0.0014 - 0.0034 in)
Limit
Less than
0.15 mm (0.0059 in)

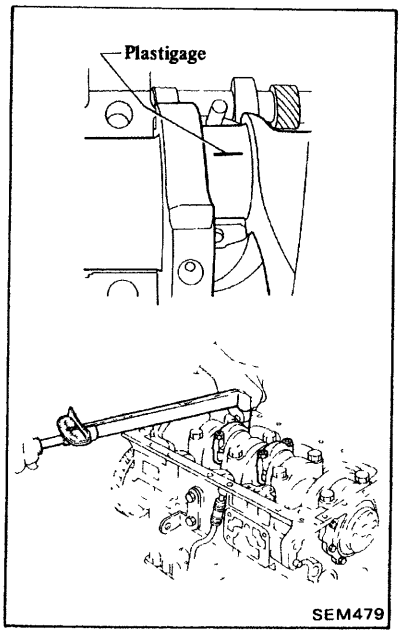

CRANKSHAFT PILOT BUSHING

CRANKSHAFT PILOT BUSHING REPLACEMENT

1. Pull out bushing with Tool.

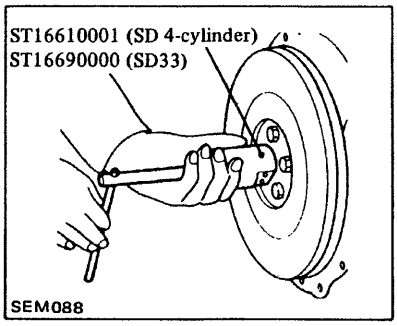

2. Insert pilot bushing until distance between flange end and bushing is specified value.

Distance "A":
Approx. 3.5 mm (0.138 in)

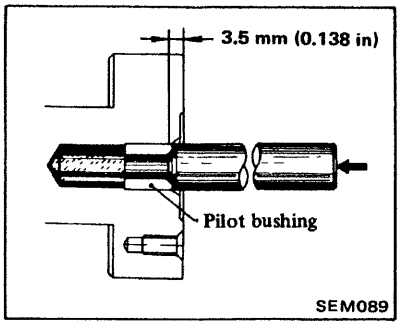

a. Do not oil bushing.
b. Do not insert excessively.

COMBUSTION CHAMBER

Check combustion chamber for cracks and other damage. If necessary, replace.

COMBUSTION CHAMBER REPLACEMENT

Usually combustion chamber should not be removed.

1. Remove combustion chamber so that cylinder head cannot be damaged.

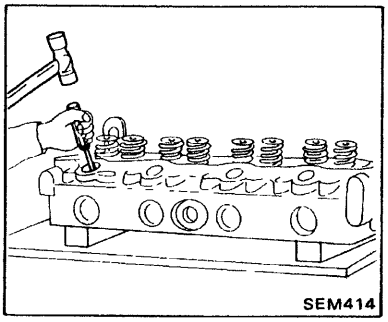

2. Install combustion chamber.
(1) Cool combustion chamber with dry ice for approximately 5 to 10 minutes.

WARNING:
Do not touch cooled combustion chamber with bare hand.

(2) Align combustion chamber knock pin with cylinder head notch, and drive in combustion chamber **with a soft hammer.**

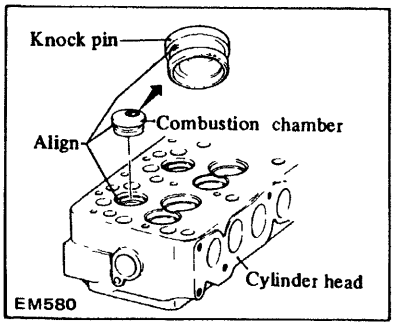

3. Check amount of protrusion of combustion chamber.

FLYWHEEL

1. Check ring gear for wear or damage. If worn or damaged excessevely, replace.

Removal and installation of ring gear requires use of hydraulic press. Heat ring gear to 180 to 200°C (356 to 392°F), thus facilitating removal and installation.

Do not heat ring gear to more than 250°C (482°F).

2. If clutch contact surface of flywheel is worn, damaged or roughened beyond limit, replace.
3. Check flywheel runout before disassembling and after assembling. If beyond the limit, replace flywheel.

Runout (Total indicator reading):
Less than 0.15 mm (0.0059 in)

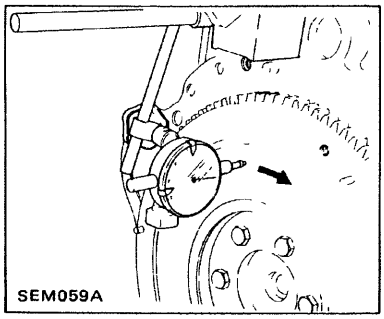

GEAR TRAIN

CAMSHAFT DRIVE GEAR

1. If gear tooth and key have scratches or are excessively worn, replace gear and key.
2. Check gear train backlash before disassembling and after assembling. If beyond the limit, replace gear.

Backlash:
Standard
0.07 - 0.20 mm
(0.0028 - 0.0079 in)
Limit
0.30 mm (0.0118 in)

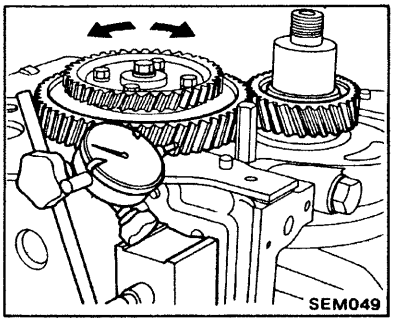

INJECTION PUMP DRIVE GEAR

Check gear backlash before disassembling and after assembling. If beyond the limit, replace idler gear or injection pump drive gear.

Gear backlash:
Standard
0.07 - 0.20 mm
(0.0028 - 0.0079 in)
Limit
0.30 mm (0.0118 in)

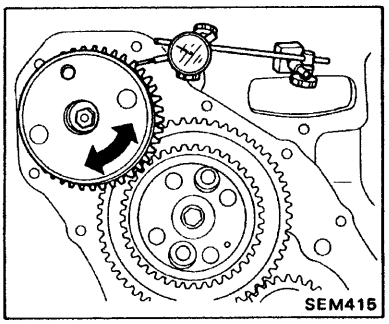

FRONT PLATE

Check front plate for warpage. If not within the limit, make flat or replace front plate.

Warpage limit:
0.2 mm (0.008 in)

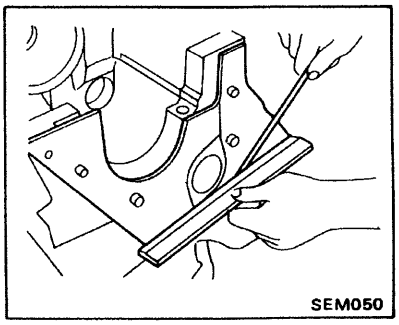

ENGINE ASSEMBLY

PRECAUTIONS

1. When installing sliding parts such as bearings, be sure to apply engine oil on the sliding surfaces.
2. Use new packing and oil seals.
3. Be sure to follow the specified order and tightening torque.

4 bearings (SD33) & 3 bearings (SD22)

4. Applying sealant
   Use sealant to eliminate water and oil leaks.

Do not apply too much sealant.
Parts requiring sealant are:

(1) Main bearing cap and cylinder block

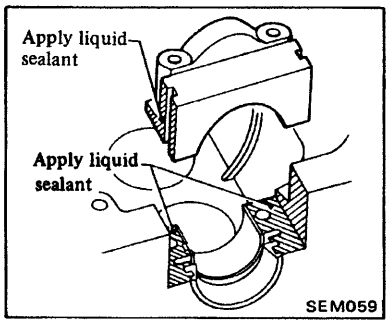

(2) Cylinder block

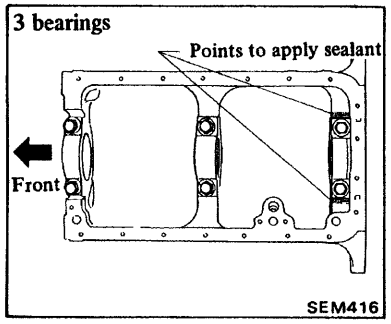

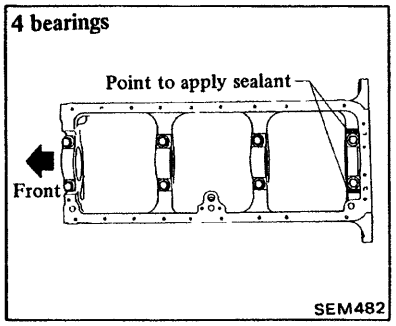

After inserting rear bearing cap side seals, apply sealant to rear main bearing cap.

ASSEMBLING CYLINDER HEAD

1. Install glow plugs.

Ⓣ : **Glow plug**
15 - 20 N·m
(1.5 - 2.0 kg-m,
11 - 14 ft-lb)

2. Install valve and valve spring.

(1) Install new valve stem seal with Tool.

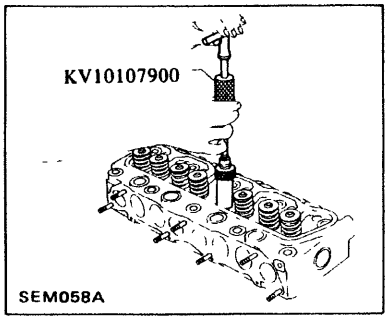

(2) Install valve, valve spring, valve spring retainer and valve spring collet by using Tool.

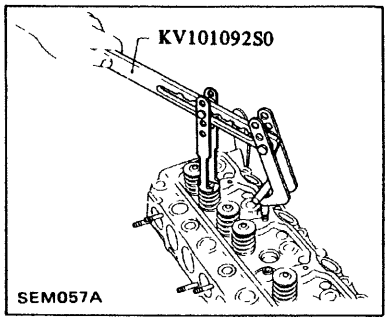

a. Install valve spring (uneven pitch type) with its narrow pitch side (yellow or red painted) at cylinder head side.

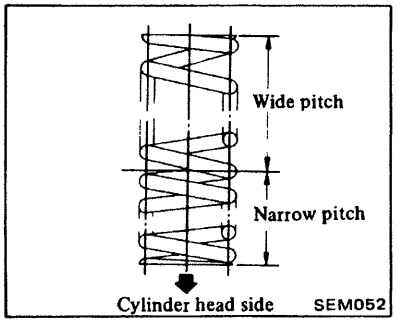

b. When installing valve, apply engine oil on the valve stem and lip of valve stem oil seal.
c. Check whether the valve face is free of foreign matter.

ASSEMBLING PISTON AND CONNECTING ROD

Assemble pistons, piston pins and connecting rods of the designated cylinders.

a. Immerse piston in oil of 80°C (176°F), and push in piston pin. Install snap ring.
b. Install connecting rod and piston so that leaf type combustion chamber on piston head is opposite the matching marks on connecting rod and cap.

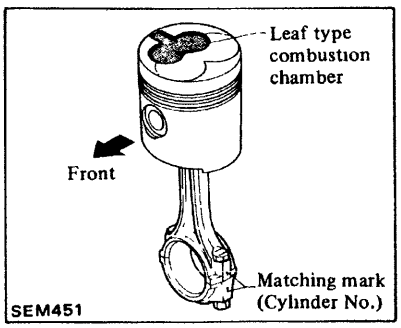

SD22-3 bearing & SD33

No matching marks are stamped on service parts of connecting rod. Install so that connecting rod big end is offset with respect to piston, so that on No. 1, No. 3 and No. 5 cylinders this offset is rearward with respect to engine and on No. 2, No. 4 and No. 6 cylinders this offset is forward with respect to engine and so that leaf type combustion chamber on piston head is at right side of engine.

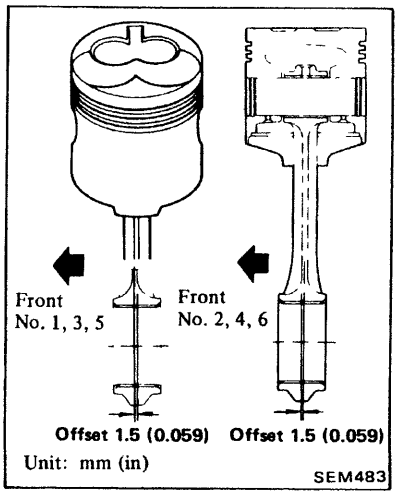

SD series 5-bearing engine

Install so that connecting rod big end is offset with respect to piston, and that this offset is forward on No. 1 and No. 3 cylinders with respect to engine and rearward on No. 2 and No. 4 cylinders.
Additionally, the leaf type combustion chamber on piston head must be at right side of engine.

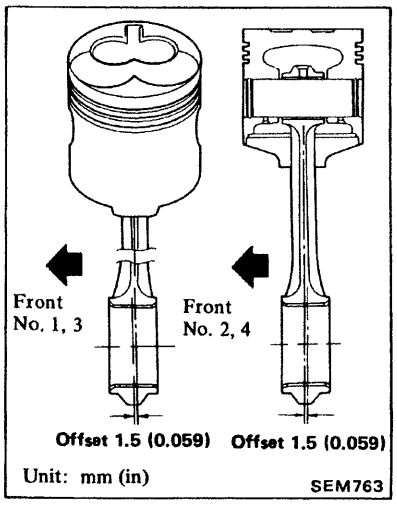

Install piston ring so that mark stamped on ring faces upward.

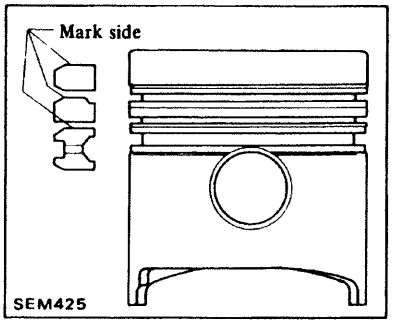

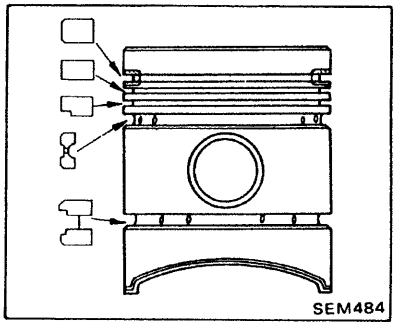

ASSEMBLING ENGINE OVERALL

INSTALLING INTERNAL PARTS

First, mount cylinder block on work stand (refer to Engine Disassembly).

Then install following parts:
1. Install front plate, and measure front plate warpage.
2. Install valve lifter with engine oil coated.
3. Install camshaft assembly with engine oil applied to bushing.
4. Crankshaft
(1) Set upper main bearings at the proper position on cylinder block.

a. Install bearing so that side with oil groove is on cylinder block side and side without oil groove is on cap side.

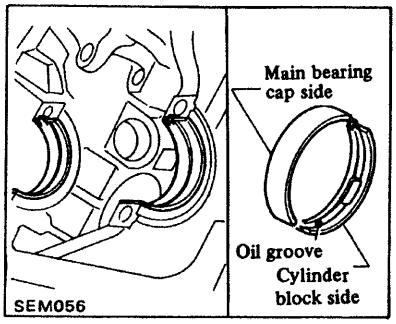

b. Only apply engine oil to inside of bearing.

(2) Apply engine oil to crankshaft journal and pin and install crankshaft.
(3) Install main bearing caps.

3 bearings (SD22) & 4 bearings (SD33)

a) Install main bearing cap so that embossed "F" mark is at front side of vehicle.

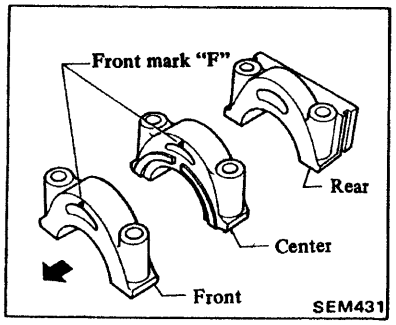

b) Apply engine oil to main bearing cap and cylinder block contact surfaces.
c) Install rear end oil seals to main bearing cap and cylinder block by hand so that they are protruded by 0.5 mm (0.020 in) from end surface.
Apply grease to contact surface of rear end oil seal and crankshaft.

Do not depress oil seal at middle portion.

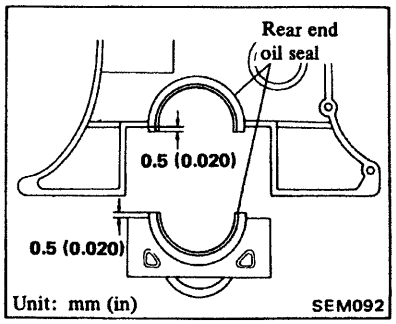

d) Install rear main bearing cap by aligning marks on cylinder block and cap.

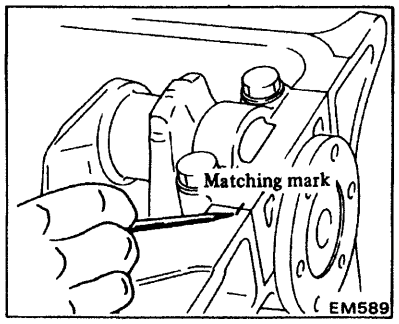

e) Install new rear main bearing cap side seal with liquid sealant.

a. Face groove of side oil seal toward cap and block.

b. Make sure that side oil seal end protrudes by 0.5 mm (0.020 in) from cylinder block.

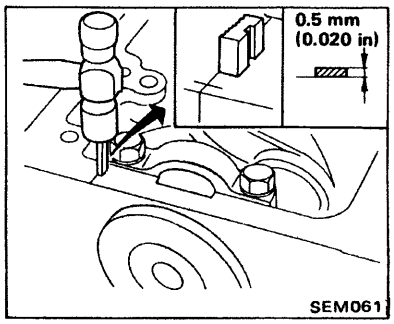

5 bearings (SD 4-cylinder)

a) Install main bearing cap so that "F" mark is at front side of vehicle.

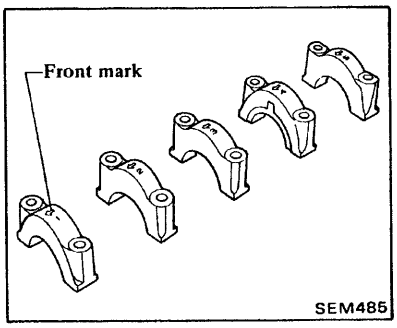

b) Apply engine oil to main bearing cap and cylinder block contact surfaces.

c) Install oil seal assembly. Apply grease to contact surface of rear end oil seal and crankshaft.

(4) Install crankshaft thrust washer at the 4th journal from front.

Install thrust washer so that oil groove can face crankshaft.

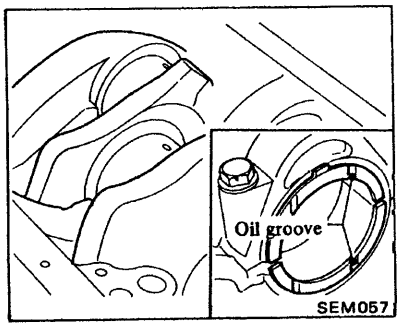

(5) Tighten bearing cap bolts gradually in stages, starting from two to three separate stages, from center bearing and moving outward in sequence.

Ⓣ : Main bearing cap bolt:
167 - 172 N·m
(17.0 - 17.5 kg-m,
123 - 127 ft-lb)

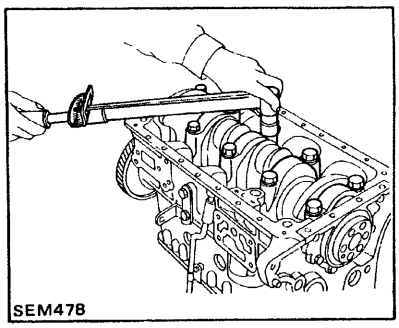

(6) Measure crankshaft end play.

If not within specification, replace with proper thrust washer.

Crankshaft end play:
Standard
0.06 - 0.14 mm
(0.0024 - 0.0055 in)
Limit
Less than 0.4 mm (0.016 in)
Thrust washer oversize:
0.2 mm (0.008 in) and
0.4 mm (0.016 in) oversize

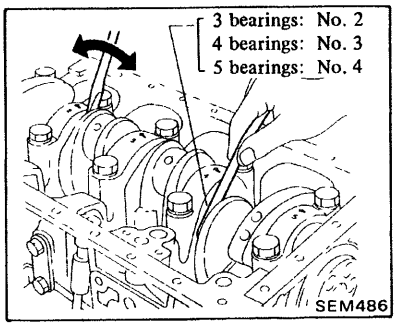

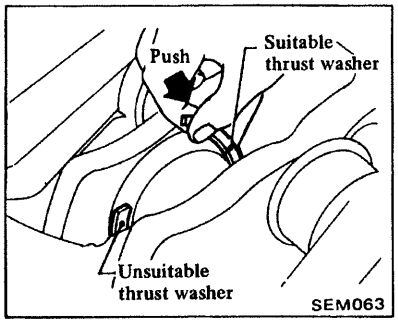

5. Install piston assembly with Tool.

(1) Install piston assembly by aligning matching mark on connecting rod big end.

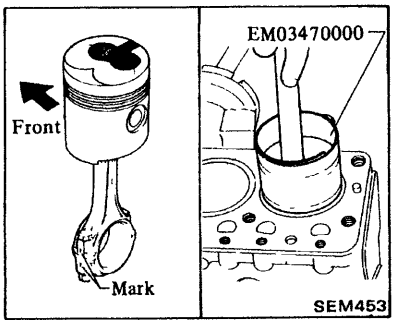

(2) Tighten connecting rod bearing cap nut.

Ⓣ : Connecting rod bearing cap:
SD22 and SD33
51 - 56 N·m
(5.2 - 5.7 kg-m,
38 - 41 ft-lb)
SD23 and SD25
67 - 71 N·m
(6.8 - 7.2 kg-m,
49 - 52 ft-lb)

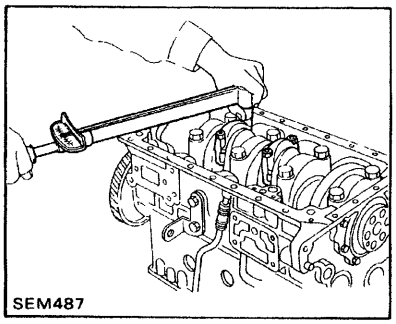

(3) Measure clearance between connecting rod big end and web of crankshaft.

If beyond the specified value, replace connecting rod.

Connecting rod thrust clearance:
0.1 - 0.2 mm
(0.004 - 0.008 in)

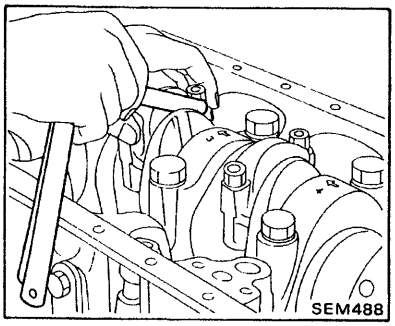

6. Install oil pump assembly.
7. Measure piston top clearance.
(1) Set piston to T.D.C.
(2) Measure clearance between top of piston and cylinder block with dial gauge. Measure clearance at front and rear of each piston.

Piston top clearance:
Standard
–0.27 - +0.08 mm
(–0.0106 - +0.0031 in)
Limit
–0.4 - +0.3 mm
(–0.016 - +0.012 in)

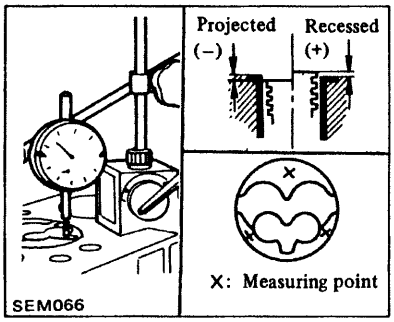

8. Install crankshaft gear.
(1) Install crankshaft gear through key by aligning crank gear and camshaft gear matching marks.

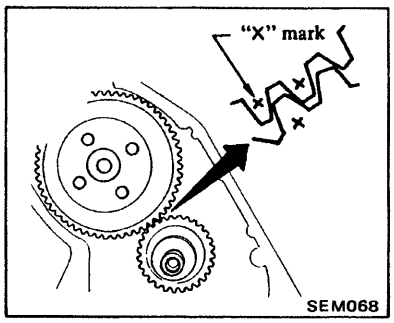

(2) Measure gear backlash. Refer to Inspection and Repair.
9. Install oil jet so that it can face each gear.

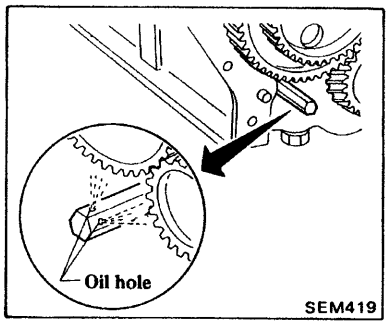

10. Install rear engine plate (SD 4-cylinder)/flywheel housing (SD33) and flywheel and then bend lock plate (if equipped).

Ⓣ : Flywheel bolt
3 bearings & 4 bearings
44 - 49 N·m
(4.5 - 5.0 kg-m,
33 - 36 ft-lb)
5 bearings
88 - 98 N·m
(9.0 - 10.0 kg-m,
65 - 72 ft-lb)
Washer based bolt
127 - 147 N·m
(13.0 - 15.0 kg-m,
94 - 108 ft-lb)

INSTALLING CYLINDER HEAD

1. Install new cylinder head gasket.

Securely install rubber rings into water and oil holes.

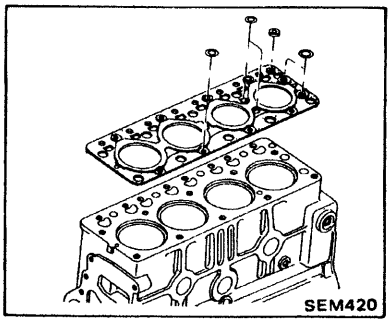

2. Install cylinder head by accommodating knock pin of cylinder block.

Be sure to install gasket with TOP mark facing upward if that mark is stamped.

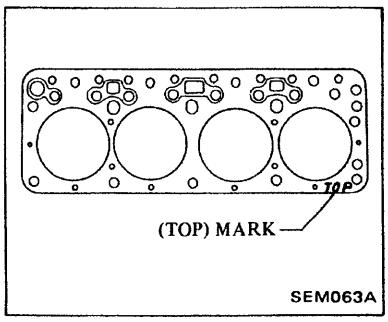

3. Tighten cylinder head bolts in the sequence shown below. Install cylinder head.

(1) Tighten main bolts to 59 - 78 N·m (6 - 8 kg-m, 43 - 58 ft-lb).
(2) Tighten sub bolts to 20 - 29 N·m (2 - 3 kg-m, 14 - 22 ft-lb).
(3) Tighten main bolts to 118 - 127 N·m (12 - 13 kg-m, 87 - 94 ft-lb).
(4) Tighten sub bolts to 44 - 54 N·m (4.5 - 5.5 kg-m, 33 - 40 ft-lb).

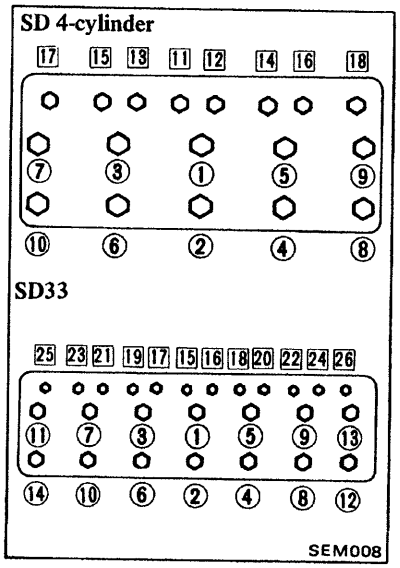

After installing engine in the vehicle, warm up engine and retighten cylinder head bolts.

4. Install push rod.

Turn push rod and make sure that it is within spherical area of valve lifter.

5. Install rocker shaft assembly.

a. Tighten in two or three stages outwardly from center bracket.
b. Fully loosen rocker arm screws.

Ⓣ : Rocker shaft bolt
20 - 25 N·m
(2.0 - 2.5 kg-m,
14 - 18 ft-lb)

INSTALLING FRONT PARTS

1. Install front cover with new gasket and new front oil seal.

Ⓣ : Front cover fixing bolt
M6
4 - 6 N·m
(0.4 - 0.6 kg-m,
2.9 - 4.3 ft-lb)
M8
10 - 13 N·m
(1.0 - 1.3 kg-m,
7 - 9 ft-lb)

2. Install crank pulley.

Ⓣ : Crank pulley
294 - 324 N·m
(30 - 33 kg-m,
217 - 239 ft-lb)

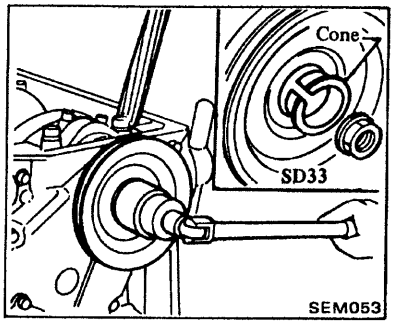

3. Install oil pan with new gasket coated with liquid sealant.
4. Install water pump with new gasket.
5. Install thermostat housing with new gasket.

INSTALLING SIDE PARTS

1. Install oil pump spindle by aligning grooves of camshaft, oil pump, drive gear and oil pump drive shaft.

Face oil hole in support toward cylinder block side and install support with new O-ring (SD 4-cylinder)/ gasket (SD33).

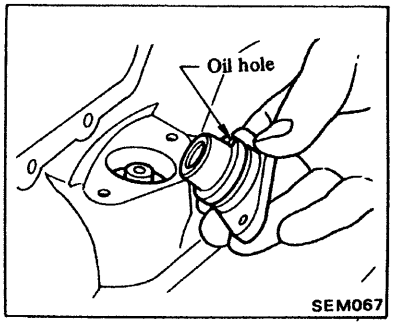

2. Connect oil cooler hose to cylinder head.
3. Install glow plug harness.
4. Align front cover and crank pulley mark for setting No. 1 piston at T.D.C.

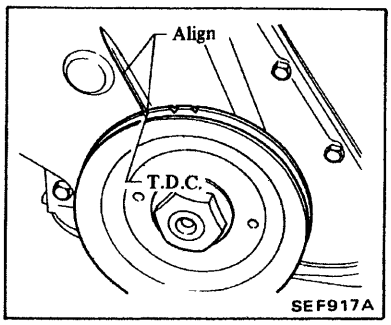

5. Install injection pump assembly. Refer to Section EF.
6. Injection nozzle and tube.
(1) Install new washer and injection nozzle.

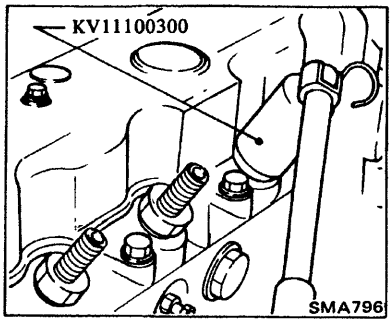

(2) Install spill tube.

Ⓣ : Spill tube fixing nut
39 - 49 N·m
(4 - 5 kg-m,
29 - 36 ft-lb)

(3) Install injection tube.

Ⓣ : Injection tube flare nut
29 - 34 N·m
(3.0 - 3.5 kg-m,
22 - 25 ft-lb)

7. Temporarily install oil cooler, oil filter bracket and oil pipe, and then gradually tighten them.
8. Vacuum tube assembly.
9. Install diesel pump controller.

10. Connect diesel pump controller connecting rod to injection pump lever (if equipped).

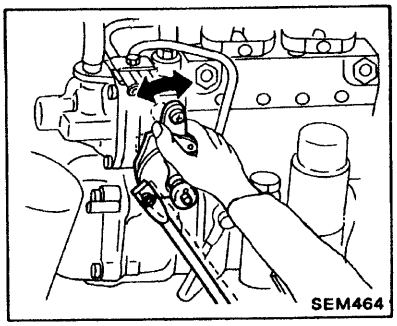

After installation, make sure there is play in pump lever.

11. Adjust valve clearance.
    Refer to Section MA.
12. Install rocker cover with new gasket.

Ⓣ : **Rocker cover bolt**
10 - 13 N·m
(1.0 - 1.3 kg-m,
7 - 9 ft-lb)

13. Dismount engine from work stand and remove engine attachment.
14. Install rear and left side parts.
- Breather assembly
- Intake and Exhaust manifold

Ⓣ : **Intake and exhaust manifolds**
15 - 18 N·m
(1.5 - 1.8 kg-m,
11 - 13 ft-lb)

- Alternator bracket

Ⓣ : **Bracket bolt**
26 - 36 N·m
(2.7 - 3.7 kg-m,
20 - 27 ft-lb)

- Alternator assembly and fan belt

Ⓣ : **11 - 14 N·m**
(1.1 - 1.4 kg-m,
8 - 10 ft-lb)

- Engine mountings
- Starter motor
- Clutch cover assembly
  Refer to Section CL.
- Transmission assembly
  Refer to Section MT.

ENGINE TUNE-UP

After installing engine in vehicle, tune up engine.
Refer to Section MA.
- Fill engine oil and coolant to the specified levels.
- Bleed fuel system.
- Adjust drive belt deflection.
- Adjust injection timing.
- Adjust idle speed.
- Adjust valve clearance.
- Retighten cylinder head bolt.

SERVICE DATA AND SPECIFICATIONS

INSPECTION AND ADJUSTMENT

CYLINDER HEAD

Unit: mm (in)

	Standard	Limit
Longitudinal direction	Less than 0.10 (0.0039)	0.20 (0.0079)
Transverse direction	Less than 0.05 (0.0020)	

VALVE

Unit: mm (in)

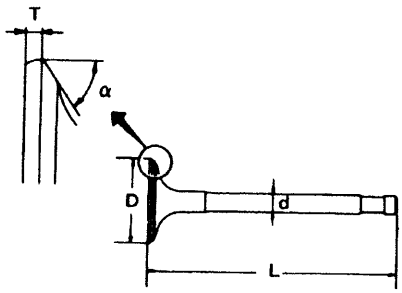

SEM188

	SD22 and SD33			SD23 and SD25	
	Standard	Service		Standard	Service
Valve head diameter "D" Intake	38.0 (1.496)			40.0 (1.575)	
Exhaust	32.0 (1.260)			34.0 (1.339)	
Valve length "L" Intake	117 (4.61)				
Exhaust					
Valve stem diameter "d" Intake	7.970 - 7.985 (0.3138 - 0.3144)	8.170 - 8.185 (0.3217 - 0.3222)	8.370 - 8.385 (0.3295 - 0.3301)	7.970 - 7.985 (0.3138 - 0.3144)	–
Exhaust	7.945 - 7.960 (0.3128 - 0.3134)	8.145 - 8.160 (0.3207 - 0.3213)	8.345 - 8.360 (0.3285 - 0.3291)	7.945 - 7.960 (0.3128 - 0.3134)	–
Valve seat angle "α"	45° - 45°30′				
Valve margin "T" limit	1.0 (0.039)			1.5 (0.059)	
Valve stem and surface grinding limit	0.2 (0.008)				
Valve clearance (Hot) Intake	0.35 (0.014)				
Exhaust					

Valve spring

Free length mm (in)	Painted yellow	50.20 (1.976)
	Painted red	50.35 (1.982)
Pressure height mm/N (mm/kg, in/lb)	30.4/599.2 (30.4/61.1, 1.197/134.7)	
Assembled height mm/N (mm/kg, in/lb)	39/294 (39/30, 1.54/66)	
Out of square mm (in)	1.3 (0.051)	

Valve guide (SD23 and SD25)

Unit: mm (in)

	Standard	Service
Valve guide outside diameter	12.033 - 12.044 (0.4737 - 0.4742)	–
Valve guide inner diameter (Finished size)	8.00 - 8.015 (0.3150 - 0.3156)	
Cylinder head valve guide hole diameter	12.00 - 12.011 (0.4724 - 0.4729)	–
Interference fit of valve guide	0.022 - 0.044 (0.0009 - 0.0017)	
	Standard	**Max. tolerance**
Stem to guide clearance Intake	0.015 - 0.045 (0.0006 - 0.0018)	0.15 (0.0059)
Exhaust	0.04 - 0.07 (0.0016 - 0.0028)	0.20 (0.0079)
Valve deflection limit	0.15 (0.0059)	

Valve stem hole (Cylinder head) (SD22 and SD33)

Unit: mm (in)

Valve stem hole inner diameter	8.000 - 8.015 (0.3150 - 0.3156)	
	Standard	**Max. tolerance**
Stem to stem hole clearance Intake	0.015 - 0.045 (0.0006 - 0.0018)	0.15 (0.0059)
Exhaust	0.04 - 0.07 (0.0016 - 0.0028)	0.20 (0.0079)
Valve deflection limit	0.15 (0.0059)	

Valve seat

Unit mm (in)

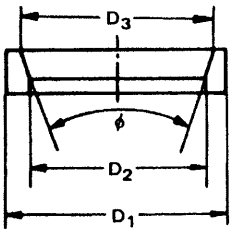

EM733

	SD22 and SD33			SD23 and SD25		
	Standard	Service		Standard	Service	
Intake Outer diameter "D1"	39.035 - 39.045 (1.5368 - 1.5372)	–		41.035 - 41.045 (1.6155 - 1.6159)	–	
Inner diameter "D2"	32.9 - 33.1 (1.295 - 1.303)	–		34.9 - 35.1 (1.374 - 1.382)	–	
Diameter of seat "D3"	36.95 - 37.05 (1.4547 - 1.4587)	–		38.95 - 39.05 (1.5335 - 1.5374)	–	
Valve seat face angle "ϕ"	89° - 90°	–		89° - 90°	–	
Exhaust Outer diameter "D1"	35.035 - 35.045 (1.3793 - 1.3797)	35.235 - 35.245 (1.3872 - 1.3876)	35.435 - 35.445 (1.3951 - 1.3955)	37.035 - 37.045 (1.4581 - 1.4585)	37.235 - 37.245 (1.4659 - 1.4663)	37.435 - 37.445 (1.4738 - 1.4742)
Inner diameter "D2"	28.4 - 28.6 (1.118 - 1.126)	28.4 - 28.6 (1.118 - 1.126)	28.4 - 28.6 (1.118 - 1.126)	30.4 - 30.6 (1.197 - 1.205)		
Diameter of seat "D3"	30.95 - 31.05 (1.2185 - 1.2224)	30.95 - 31.05 (1.2185 - 1.2224)	30.95 - 31.05 (1.2185 - 1.2224)	32.950 - 33.050 (1.2972 - 1.3012)		
Cylinder head valve seat diameter	34.995 - 35.01 (1.3778 - 1.3783)	35.195 - 35.21 (1.3856 - 1.3862)	35.395 - 35.41 (1.3935 - 1.3941)	36.995 - 37.010 (1.4565 - 1.4571)	–	–
Valve seat face angle "ϕ"	89° - 90°	–		89° - 90°		

CAMSHAFT AND CAMSHAFT BUSHING

Unit: mm (in)

	Standard	Limit
Camshaft journal to bushing clearance [Oil clearance] Front	0.024 - 0.102 (0.0009 - 0.0040)	0.15 (0.0059)
Center	0.037 - 0.115 (0.0015 - 0.0045)	
Rear	0.024 - 0.102 (0.0009 - 0.0040)	
Camshaft journal diameter Front	45.434 - 45.447 (1.7887 - 1.7892)	–
Center	43.897 - 43.910 (1.7282 - 1.7287)	–
Rear	41.218 - 41.231 (1.6228 - 1.6233)	–
Camshaft bend (Total indicator reading)	Less than 0.03 (0.0012)	0.06 (0.0024)
Camshaft end play	0.08 - 0.28 (0.0031 - 0.0110)	0.50 (0.0197)

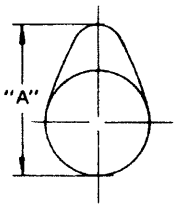

EM671

Cam height "A"	37.28 - 37.32 (1.4677 - 1.4693)
Cam height limit	36.8 (1.449)

CYLINDER BLOCK AND CYLINDER LINER

Unit: mm (in)

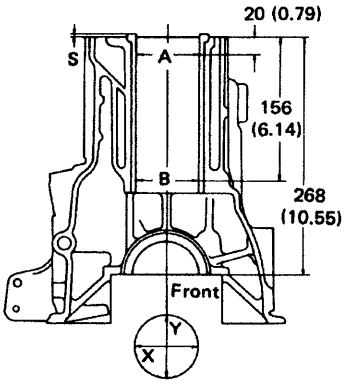

SEM251

	Standard	Wear limit
Surface flatness (Without cylinder liner)	Less than 0.10 (0.0039) (Shaft direction) Less than 0.02 (0.0008) (Right angle direction)	0.3 (0.012)
Cylinder bore (With cylinder liner) Inner diameter SD22 and SD33	82.99 - 83.03 (3.2673 - 3.2689)	0.3 (0.012)
SD23 and SD25	88.4 - 88.6 (3.480 - 3.488)	
Out-of-round (X-Y)	Less than 0.02 (0.0008)	–
Taper (A-B)	Less than 0.02 (0.0008)	–
Projection "S"	0.02 - 0.09 (0.0008 - 0.0035)	–
Division of each cylinder "S"	Less than 0.05 (0.0020)	–
Piston to cylinder liner clearance SD22 and SD33	0.04 - 0.11 (0.0016 - 0.0043)	
SD23 and SD25	0.09 - 0.115 (0.0035 - 0.0045)	
SD23 and SD25 Only for 720 model	0.080 - 0.105 (0.0031 - 0.0041)	
Interference fit cylinder liner to block SD22 and33	0.01 - 0.03 (0.0004 - 0.0012)	
SD23 and SD25	0.03 - 0.08 (0.0012 - 0.0031)	

Unit: mm (in)

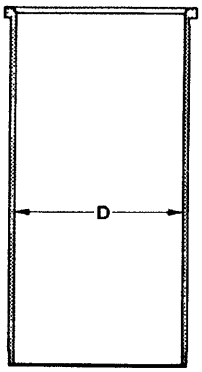

SEM427

	Standard	Service
Cylinder liner inner diameter "D"		
SD22 and SD33	82.995 - 83.025 (3.2675 - 3.2687)	83.03 - 83.05 (3.2689 - 3.2697)
SD23 and SD25	89.000 - 89.035 (3.5039 - 3.5053)	89.050 - 89.070 (3.5059 - 3.5067)

PISTON, PISTON RING AND PISTON PIN

Piston

Unit: mm (in)

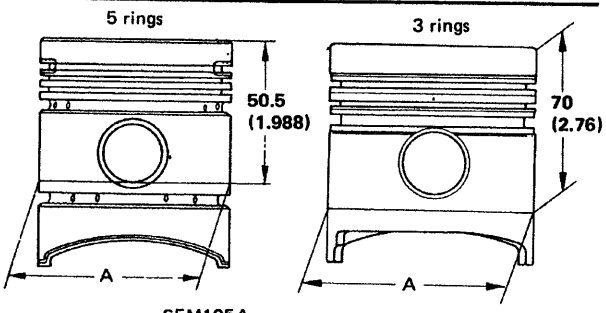

SEM105A SEM778A

	SD22 and SD33	SD23 and SD25
Piston skirt diameter "A" 3 rings	82.905 - 82.945 (3.2640 - 3.2655)	88.895 - 88.935 (3.4998 - 3.5014)
		88.905 - 88.945* (3.5002 - 3.5018)
5 rings	82.845 - 82.885 (3.2616 - 3.2632)	–
Piston pin hole diameter	25.99 - 26.00 (1.0232 - 1.0236)	

*: Only for 720 model

Piston ring

Unit: mm (in)

	Standard		Limit	
	5 rings	3 rings	5 rings	3 rings
Side clearance No. 1	0.06 - 0.10 (0.0024 - 0.0039)		0.5 (0.020)	
No. 2	0.04 - 0.08 (0.0016 - 0.0031)		0.3 (0.012)	
No. 3	0.04 - 0.08 (0.0016 - 0.0031)	0.02 - 0.06 (0.0008 - 0.0024)	0.3 (0.012)	0.15 (0.0059)
No. 4	0.02 - 0.06 (0.0008 - 0.0024)	–	0.15 (0.0059)	–
No. 5			0.15 (0.0059)	–
Ring gap No. 1	0.30 - 0.45 (0.0118 - 0.0177)		1.5 (0.059)	
No. 2	0.20 - 0.35 (0.0079 - 0.0138)			
No. 3	0.20 - 0.35 (0.0079 - 0.0138)	0.15 - 0.30 (0.0059 - 0.0118)		
No. 4 & No. 5	0.15 - 0.30 (0.0059 - 0.0118)	–		

Piston pin

Unit: mm (in)

	SD22 and SD33	SD23 and SD25
Piston pin outer diameter	25.993 - 26.000 (1.0233 - 1.0236)	
Interference fit of piston pin to piston	0 - 0.003 (0 - 0.0001)	–0.007 - 0.010 (–0.0003 - 0.0004)
Piston pin to connecting rod clearance	0.025 - 0.045 (0.0010 - 0.0018)	

CONNECTING ROD

Unit: mm (in)

Center distance SD22, SD25 and SD33	170.0 (6.69)
SD23	174.2 (6.86)
Connecting rod bend or torsion [Per 100 mm (3.94 in) length] Standard	0 - 0.05 (0 - 0.0020)
Limit	0.05 (0.0020)
Piston pin bore diameter	26.025 - 26.038 (1.0246 - 1.0251)
Big end play Standard	0.1 - 0.2 (0.004 - 0.008)
Limit	0.2 (0.008)

CRANKSHAFT

Unit: mm (in)

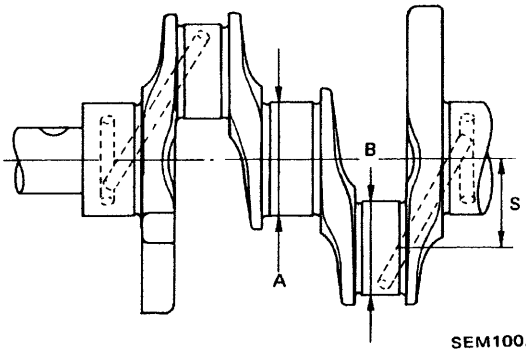

SEM100A

Journal diameter "A"	70.907 - 70.920 (2.7916 - 2.7921)
Pin diameter "B"	52.913 - 52.926 (2.0832 - 2.0837)
"S" SD22, SD25 and SD33	50.00 (1.9685)
SD23	46.00 (1.8110)

Out-of-round X-Y
Taper A-B

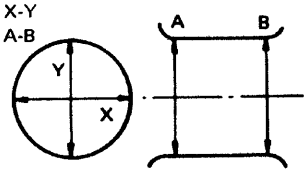

EM715

Taper of journal and pin "A-B" Standard	0.01 (0.0004)
Limit	0.02 (0.0008)
Out-of-round of journal and pin "X-Y" Standard	0.01 (0.0004)
Limit	0.02 (0.0008)
Crankshaft bend Standard	0 - 0.03 (0 - 0.0012)
Limit	0.10 (0.0039)
Crankshaft end play Standard	0.06 - 0.14 (0.0024 - 0.0055)
Limit	0.40 (0.0157)

BEARING

Bearing clearance

Unit: mm (in)

	Standard	Limit
Main bearing clearance 3 or 4 bearings	0.035 - 0.093 (0.0014 - 0.0037)	0.15 (0.0059)
5 bearings	0.035 - 0.087 (0.0014 - 0.0034)	
Connecting rod bearing clearance	0.035 - 0.081 (0.0014 - 0.0032)	0.15 (0.0059)

Main bearing undersize

Unit: mm (in)

	Crank journal diameter
Standard	70.907 - 70.920 (2.7916 - 2.7921)
Undersize 0.25 (0.0098)	70.657 - 70.670 (2.7818 - 2.7823)
0.50 (0.0197)	70.407 - 70.420 (2.7719 - 2.7724)
0.75 (0.0295)	70.157 - 70.170 (2.7621 - 2.7626)
1.00 (0.0394)	69.907 - 69.920 (2.7522 - 2.7528)

Connecting rod bearing undersize

Unit: mm (in)

	Crank pin diameter
Standard	52.913 - 52.926 (2.0832 - 2.0837)
Undersize 0.25 (0.0098)	52.663 - 52.676 (2.0733 - 2.0739)
0.50 (0.0197)	52.413 - 52.426 (2.0635 - 2.0640)
0.75 (0.0295)	52.163 - 52.176 (2.0537 - 2.0542)
1.00 (0.0394)	51.913 - 51.926 (2.0438 - 2.0443)

MISCELLANEOUS COMPONENTS

Unit: mm (in)

Gear train Backlash of each gear	0.07 - 0.20 (0.0028 - 0.0079)
Flywheel Runout (Total indicator reading)	Less than 0.15 (0.0059)

TIGHTENING TORQUE

Engine outer parts

		N·m	kg-m	ft-lb
Water outlet bolt		10 - 13	1.0 - 1.3	7 - 9
Water pump bolt	M8	10 - 13	1.0 - 1.3	7 - 9
	M10	20 - 25	2.0 - 2.5	14 - 18
Manifold bolt and nut		15 - 18	1.5 - 1.8	11 - 13
Injection pump nut (In-line)		20 - 25	2.0 - 2.5	14 - 18
Injection pump (VE type)	nut	20 - 25	2.0 - 2.5	14 - 18
	bolt	16 - 22	1.6 - 2.2	12 - 16
Injection pump (C.A.V.-D.P.A.)		15 - 20	1.5 - 2.0	11 - 14
Injection nozzle to cylinder head	*1	59 - 69	6.0 - 7.0	43 - 51
	*2	69 - 78	7.0 - 8.0	51 - 58
Oil cooler bolt		10 - 13	1.0 - 1.3	7 - 9
Oil cooler pipe nut		10 - 13	1.0 - 1.3	7 - 9
Timing gear cover bolt		10 - 13	1.0 - 1.3	7 - 9
Injection pump timer nut		59 - 69	6 - 7	43 - 51
Injection pump drive gear nut (VE type)		59 - 69	6.0 - 7.0	43 - 51
Injection pump drive gear (C.A.V.-D.P.A.)		15 - 20	1.5 - 2.0	11 - 14
Feed pump gear (C.A.V.-D.P.A.)		15 - 20	1.5 - 2.0	11 - 14
Injection tube flare nut		29 - 34	3.0 - 3.5	22 - 25
Spill tube with cap nut		39 - 49	4 - 5	29 - 36
Oil filter bracket bolt		26 - 36	2.7 - 3.7	20 - 27
Alternator bracket bolt		26 - 36	2.7 - 3.7	20 - 27
Alternator to adjusting bar bolt		11 - 14	1.1 - 1.4	8 - 10
Diesel pump controller bolt		10 - 13	1.0 - 1.3	7 - 9
Diesel pump controller bracket bolt		45 - 61	4.6 - 6.2	33 - 45
Thermostat housing		10 - 13	1.0 - 1.3	7 - 9

*1: Part No. of injection nozzle
16600-90060, 16600-36W00, 16600-T9000

*2: Part No. of injection nozzle
16600-37502, 16600-90012, 16600-90019, 16600-J5571, 16600-T3401, 16600-T3470, 16600-T6200, 16600-T6201, 16600-Y8400, 16600-Y8401.

Engine internal parts

	N·m	kg-m	ft-lb
Main bearing cap bolt	167 - 172	17.0 - 17.5	123 - 127
Crank pulley nut	294 - 324	30 - 33	217 - 239
Flywheel bolt			
3 bearings & 4 bearings	44 - 49	4.5 - 5.0	33 - 36
5 bearings	88 - 98	9.0 - 10.0	65 - 72
Bolt w/washer	127 - 147	13 - 15	94 - 108
Front cover bolt			
M6	4 - 6	0.4 - 0.6	2.9 - 4.3
M8	10 - 13	1.0 - 1.3	7 - 9
Front end plate bolt	10 - 13	1.0 - 1.3	7 - 9
Camshaft gear bolt	44 - 49	4.5 - 5.0	33 - 36
Oil pump bolt	13 - 19	1.3 - 1.9	9 - 14
Oil pan bolt	7 - 10	0.7 - 1.0	5.1 - 7.2
Cylinder head bolt			
Sub	44 - 54	4.5 - 5.5	33 - 40
Main	118 - 127	12 - 13	87 - 94
Rocker arm shaft bolt	20 - 25	2.0 - 2.5	14 - 18
Rocker arm lock nut	20 - 25	2.0 - 2.5	14 - 18
Camshaft thrust plate bolt	4 - 6	0.4 - 0.6	2.9 - 4.3
Connecting rod big end nut			
SD22 and SD33	51 - 56	5.2 - 5.7	38 - 41
SD23 and SD25	67 - 71	6.8 - 7.2	49 - 52
Rocker cover bolt	10 - 13	1.0 - 1.3	7 - 9
Oil jet (for piston)	29 - 39	3 - 4	22 - 29

SPECIAL SERVICE TOOLS

Tool number	Tool name	Engine application			
		SD22	SD23	SD25	SD33
ST05300000	Engine attachment 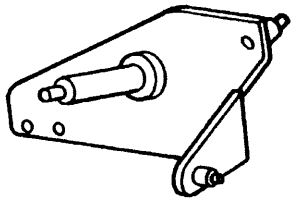	X	X	X	–
① KV11101800 ② KV10106500	Engine attachment Engine stand shaft 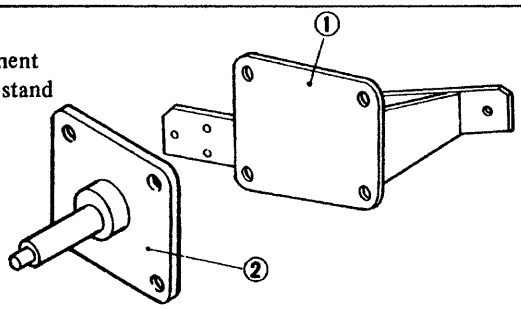	–	–	–	X
ST0501S000 ① ST05011000 ② ST05012000	Engine stand assembly Engine stand Base 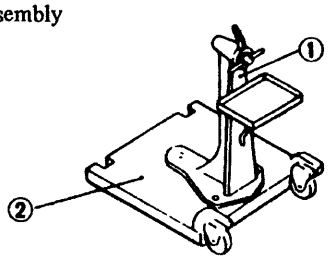	X	X	X	X
KV111021S0 ① ST16660000 ② KV11101300	Crankshaft main bearing Cap puller Adapter 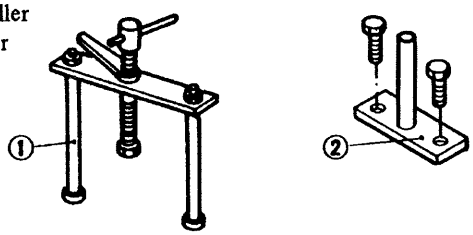	X	–	–	X
KV10107900	Valve lip seal puller 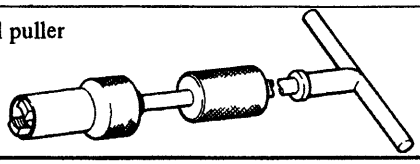	X	X	X	X

Tool number	Tool name	Engine application			
		SD22	SD23	SD25	SD33
KV101092S0 ① KV10109210 ② KV10109220	Valve spring compressor Compressor Adapter	X	X	X	X
ST1101S000	Valve guide reamer	X	–	–	X
KV101039S0 ① ST11081000 ② ST11032000 ③ ST11033000	Valve guide reamer set Reamer [12.2 mm (0.480 in) dia.] [8.0 mm (0.315 in) dia.] Valve guide drift	–	X	X	–
KV111011S0 ① KV11101120 ② KV11101130	Valve seat remover Adapter (Exhaust) Adapter (Intake)	X	–	–	X
KV111012S0 ① KV11101220 ② KV11101230 ③ KV11101240	Valve seat insert tool Adapter (Intake) Adapter (Exhaust) Adapter (Exhaust)	X	–	–	X

Tool number	Tool name	Engine application			
		SD22	SD23	SD25	SD33
KV111023S0	Cylinder liner tool	X	X	X	X
KV11102320	Cylinder liner tool adapter	–	X	X	–
KV11102500	Cylinder liner tool adapter	X	–	–	X
ST16610001	Pilot bushing puller	X	X	X	–
ST16690000	Pilot bushing puller	–	–	–	X
KV11101000	Valve oil seal drift	X	X	X	X
EM03470000	Piston ring compressor	X	X	X	X
KV11100300	Nozzle holder socket	X	X	X	X

Tool number	Tool name	Engine application			
		SD22	SD23	SD25	SD33
ST16650000 ① ST16650010 ② ST16650020 ③ ST16650030 ④ ST16650040	Cam bush replacer Bar Adapter (Front) Adapter (Center) Adapter (Rear) 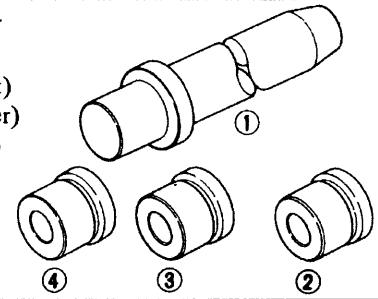	X	X	X	X
ST19530000	Injection pump timer puller 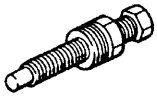	X	X	X	X
ST19320000	Oil filter wrench 	X	X	X	X
KV11100400	Socket wrench 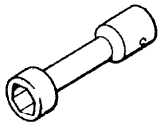	X	X	X	X

ENGINE LUBRICATION & COOLING SYSTEMS

SECTION LC

CONTENTS

ENGINE LUBRICATION SYSTEM ..... LC- 2
Lubrication circuit ..... LC- 2
Oil pump ..... LC- 3
Oil filter ..... LC- 4
Oil filter bracket ..... LC- 5
Oil cooler ..... LC- 6
Oil jets ..... LC- 7
COOLING SYSTEM ..... LC- 8
Cooling circuit ..... LC- 8
Water pump ..... LC- 9
Thermostat LC-10
Radiator LC-11
SERVICE DATA AND SPECIFICATIONS LC-12
Engine lubrication system LC-12
Engine cooling system LC-12
SPECIAL SERVICE TOOL LC-13

ENGINE LUBRICATION SYSTEM

LUBRICATION CIRCUIT

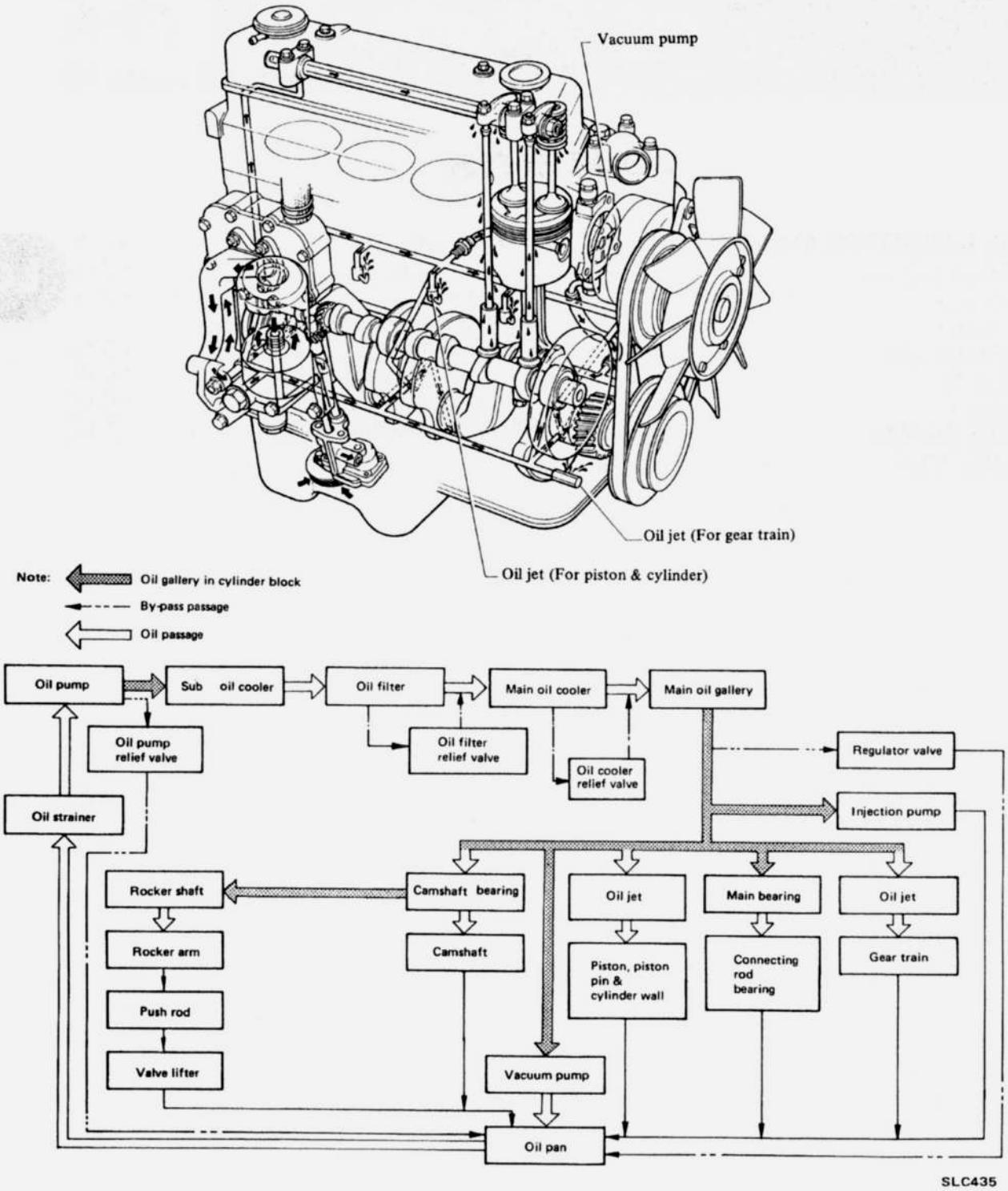

OIL PUMP

REMOVAL

1. Drain engine oil and coolant.
2. Remove oil filter using Tool (4-cylinder engine).
3. Remove injection rear bracket (if equipped) and oil pipe.

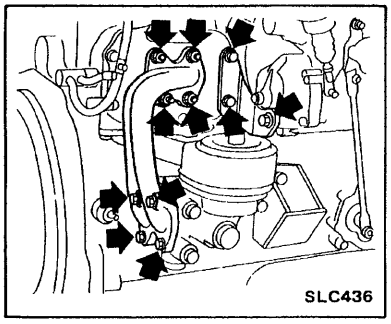

4. Remove main and sub oil cooler (if equipped) assembly.

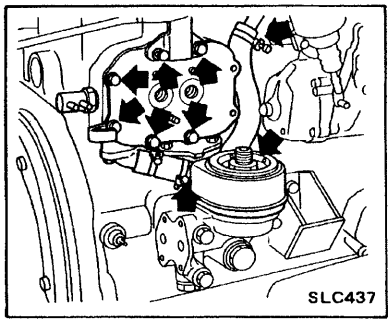

5. Remove support and oil pump drive spindle.

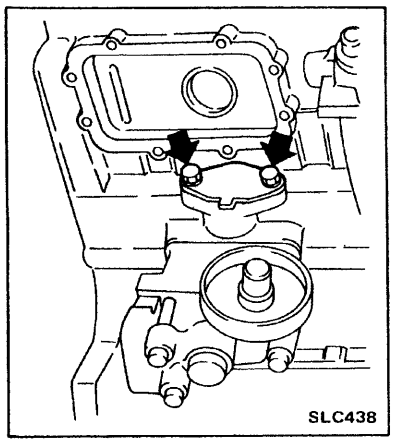

6. Remove engine undercover.

7. Remove front suspension crossmember. If this method does not apply, engine assembly must be raised.

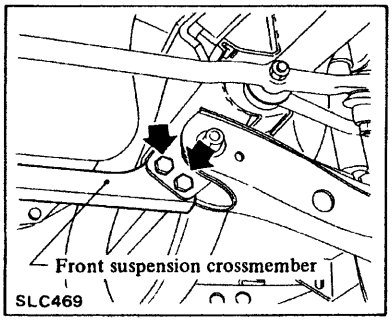

8. Remove oil pan bolts.
9. Remove oil pan with steering wheel rotated all the way to the left or right.
10. Remove oil pump assembly.

Do not drop oil pump assembly.

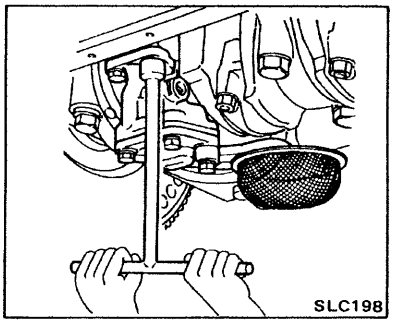

DISASSEMBLY AND ASSEMBLY

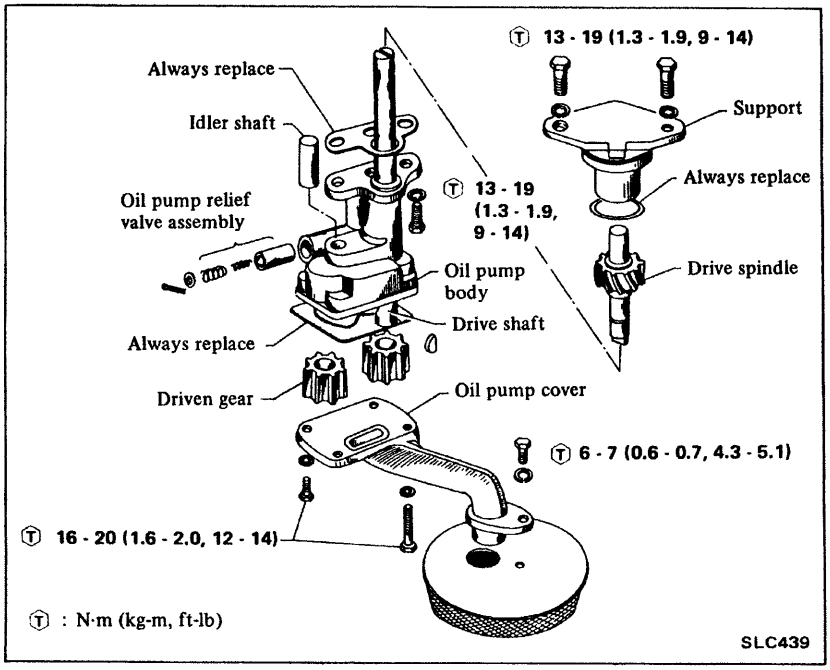

Disassembly

1. Remove oil pump cover with gasket.
2. Take out driven gear.
3. Take out drive gear.

Usually do not remove drive gear from drive shaft. If necessary, use a puller.

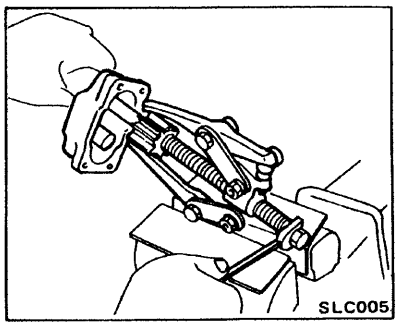

INSPECTION

1. Inspect pump body, cover, gears and drive shaft for wear and damage.
2. Check gear side clearance.

If clearance is not within specified range, replace gear case or drive shaft with gear.

Gear side clearance:
Less than 0.15 mm (0.0059 in)

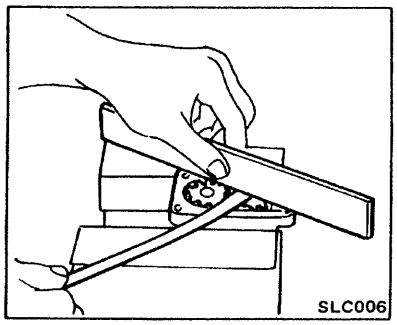

3. Check gear tooth clearance.

If clearance is not within specified range, replace gear.

Gear tooth clearance:
Less than 0.25 mm (0.0098 in)

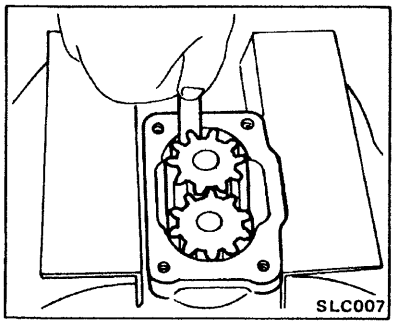

4. Check gear backlash.

If backlash is not within specified range, replace gear.

Gear backlash:
Less than 0.5 mm (0.020 in)

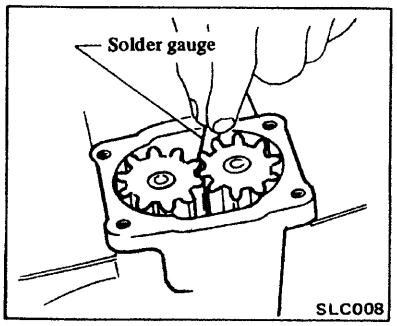

5. Check clearance between pump body cover and idler shaft and drive shaft end.

Clearance between cover and idler shaft and drive shaft end:
0.5 mm (0.020 in)

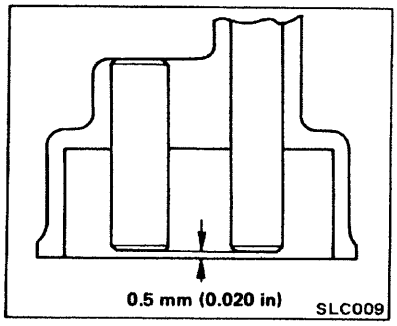

6. Check relief valve sliding surface and valve spring. If relief valve seat is scratched or its movement is not smooth, replace faulty parts.

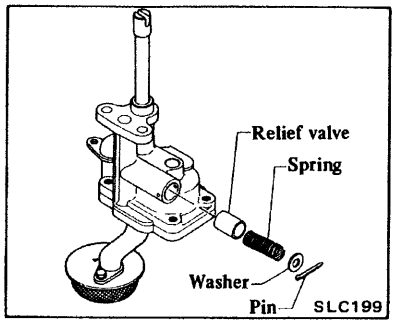

7. Check gear and pin portion of drive spindle. If they are worn, replace drive spindle.

Assembly

1. Install drive and driven gears.
2. Install oil pump cover with new gasket.

Ⓣ : **Pump cover bolt**
16 - 20 N·m
(1.6 - 2.0 kg-m,
12 - 14 ft-lb)

INSTALLATION

Install oil pump in the reverse order or removal. Observe the following:

1. When installing drive spindle, properly align drive spindle with camshaft oil pump driven gear and oil pump drive shaft groove.
2. Install support and new oil seal with oil hole on support facing cylinder block.

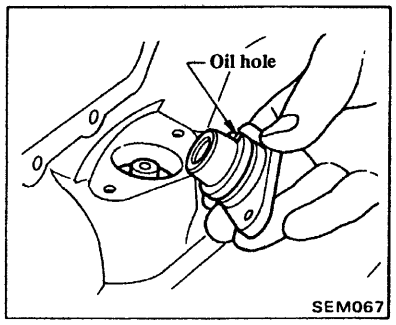

3. Use new gaskets.

Ⓣ : **Oil pump fixing bolt**
13 - 19 N·m
(1.3 - 1.9 kg-m,
9 - 14 ft-lb)

4. Be sure oil filter rubber gasket is not damaged. Replace with a new one if heavily damaged.
5. Refill engine oil to the specified quantity.

OIL FILTER

CARTRIDGE TYPE

1. Using Tool, remove oil filter.

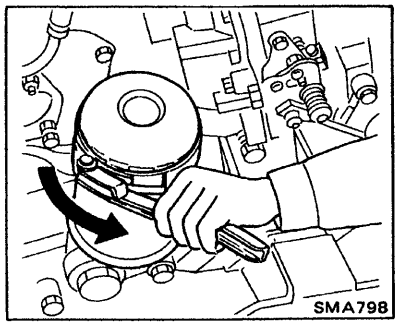

2. Wipe oil filter mounting surface with clean rag.

3. Smear a little engine oil on oil filter gasket.

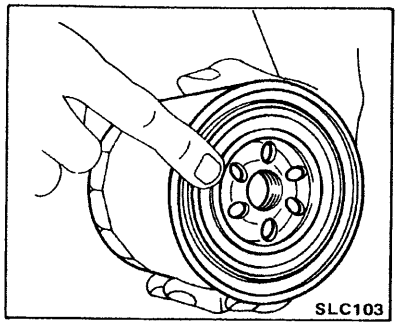

4. Install oil filter.

Hand-tighten only. Do not use a wrench to tighten filter.

5. Refill engine oil to the specified quantity.

Run engine for a few minutes and check for leaks.

CENTER SHAFT TYPE

1. Remove center shaft.

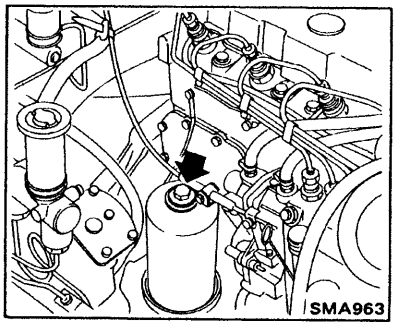

2. Take out filter element.
3. Install new element.

Always use new gaskets.

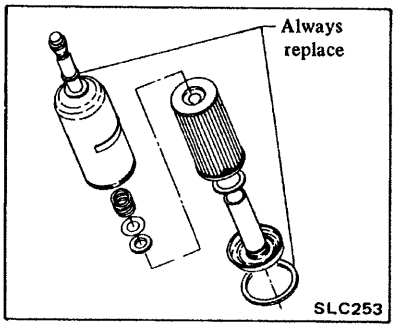

4. Tighten center shaft.

Ⓣ : Oil filter center shaft
SD22
25 - 29 N·m
(2.5 - 3.0 kg-m, 18 - 22 ft-lb)
SD33
20 - 25 N·m
(2.0 - 2.5 kg-m, 14 - 18 ft-lb)

OIL FILTER BRACKET

REMOVAL

Engine without sub oil cooler

1. Remove oil pipe and oil filter bracket with oil filter.

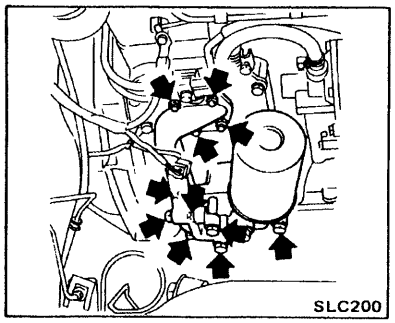

2. Remove oil filter

Engine with sub oil cooler

1. Remove oil filter.
2. Loosen stud bolt for sub oil cooler.

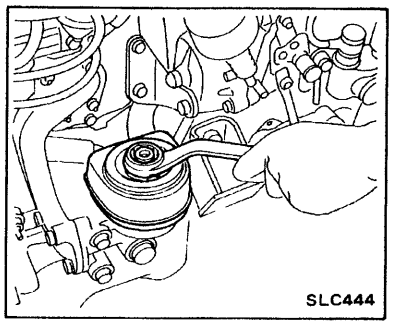

3. Remove oil pipe and oil filter bracket with sub oil cooler.

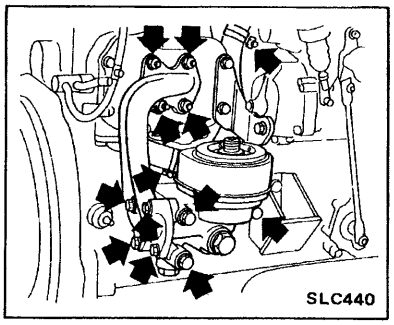

5. Remove sub oil cooler.

DISASSEMBLY AND ASSEMBLY

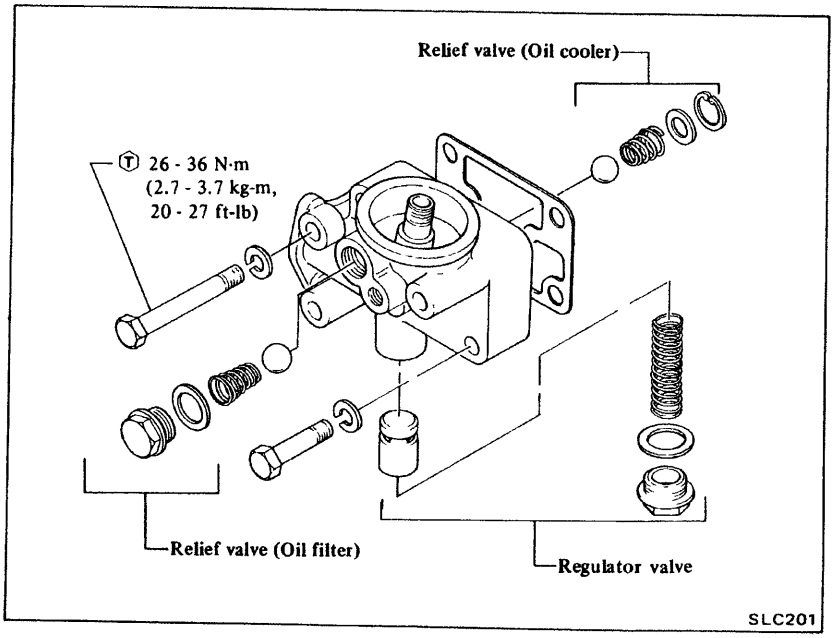

INSPECTION

1. Check relief valve sliding surface and valve spring. If relief valve seat is scratched or its movement is not smooth, replace faulty parts.
2. Check steel ball surface. If it is scratched, replace faulty parts.
3. Check to see if valve spring is weakened. If it is, replace faulty parts.

INSTALLATION

Install oil filter bracket in the reverse order of removal. Observe the following.

1. Use new washer.
2. Use new snap ring.
3. Be sure oil filter rubber gasket and sub oil cooler (if so equipped) gasket are not damaged. Replace either or both with a new one if serverely damaged.

OIL COOLER

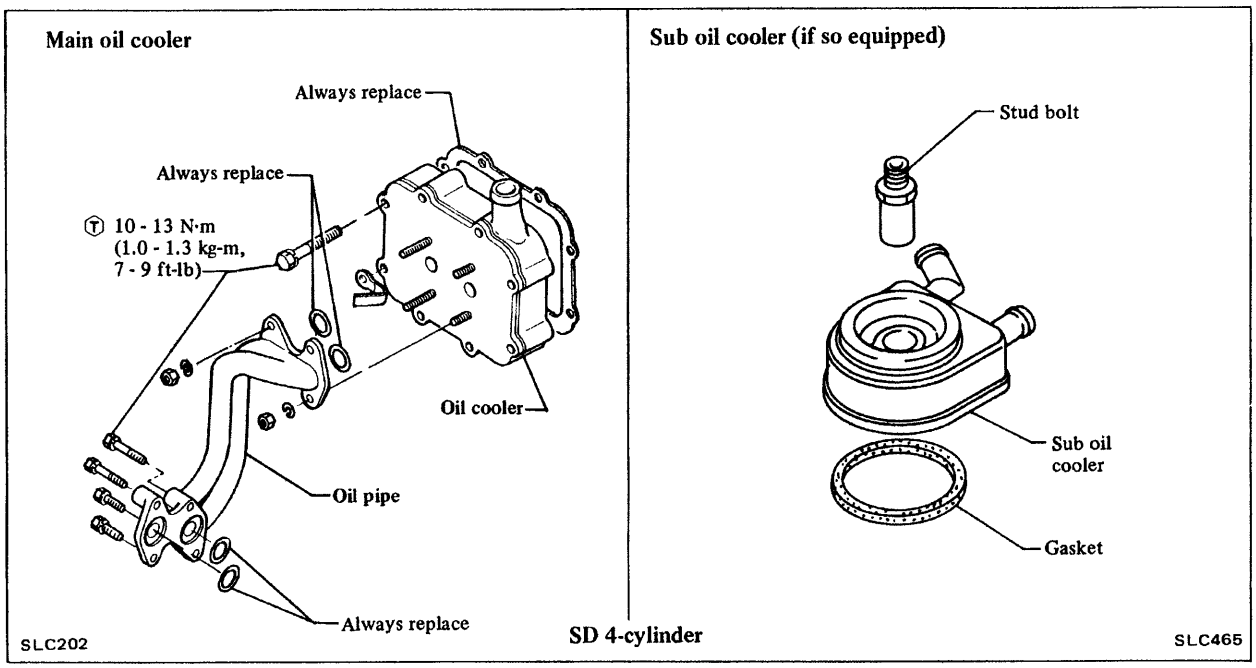

SD 4-cylinder

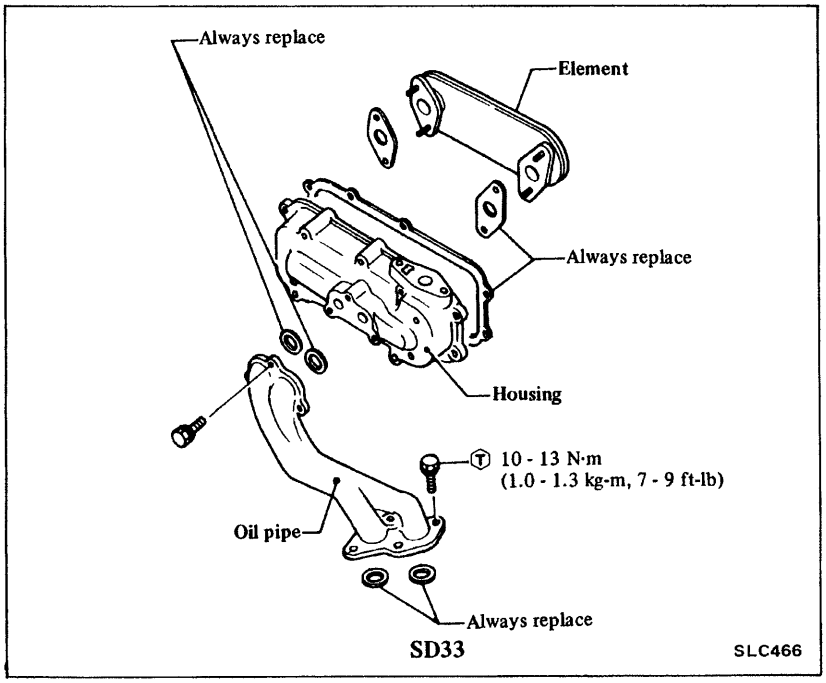

SD33

REMOVAL

1. Drain coolant until it is below cooler.
2. Remove fuel filter (SD33).
3. Remove oil filter, using Tool (SD 4-cylinder).
4. Remove oil pipe and injection pump rear bracket (if equipped).

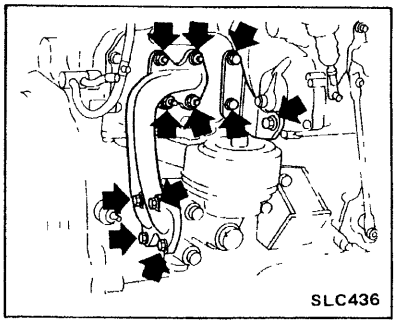

5. Disconnect water hose.
6. Remove oil cooler.

7. Remove sub oil cooler if equipped.

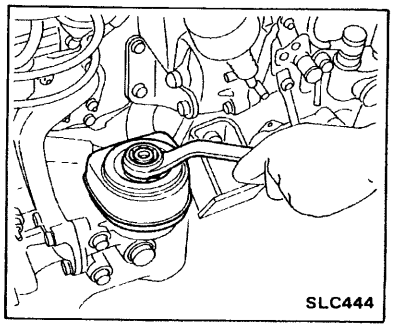

INSPECTION

1. Check oil cooler element and housing for cracks. If they are cracked, replace.
Remove sludge from element and housing before inspection.
2. When engine oil mixes with engine coolant, check oil cooler element by blocking either oil inlet or outlet with a wooden plug, applying compressed air [pressure of 981 kPa (9.81 bar, 10 kg/cm^2, 142 psi)] to unblocked inlet or outlet, and immersing oil cooler in water. Bubbles should not appear.

CAUTION:
Air pressure should not exceed 1,471 kPa (14.7 bar, 15 kg/cm^2, 213 psi).

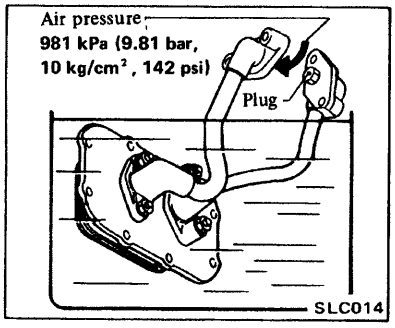

INSTALLATION

Install oil cooler in the reverse order of removal. Observe the following:
1. Use new O-ring.
2. Use new gasket.
3. Be sure oil filter rubber gasket and sub oil cooler (if so equipped) gasket are not damaged. Replace either or both with a new one if severely damaged.

OIL JETS

OIL JET FOR GEAR TRAIN

Removal

1. Drain coolant.
2. Remove radiator shroud and radiator with hoses.
3. Engage transmission gears and depress brake pedal.
4. Remove crank pulley nut and crank pulley.
5. Remove front cover.
6. Remove oil jet.

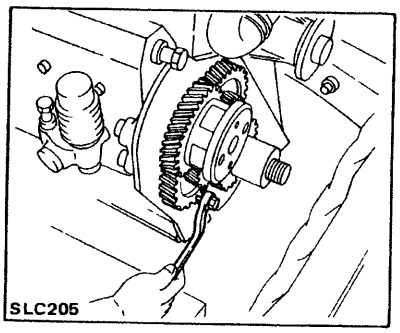

Inspection

Make sure that the holes are not clogged. Clean them with a wire if necessary.

Installation

Install oil jet in the reverse order removal. Observe the following:
Oil jet has to be installed with oil hose facing crank gear and camshaft.

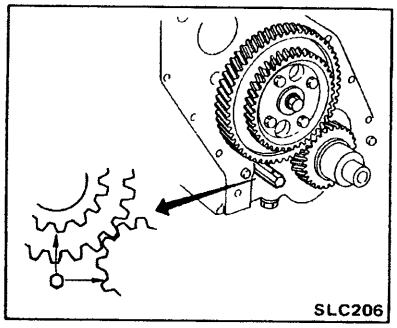

OIL JET FOR PISTON

Removal

1. Drain engine oil.
2. Remove engine undercover.
3. Remove front suspension crossmember.
4. Remove oil pan.
5. Remove oil jet bolts and then remove oil jet.

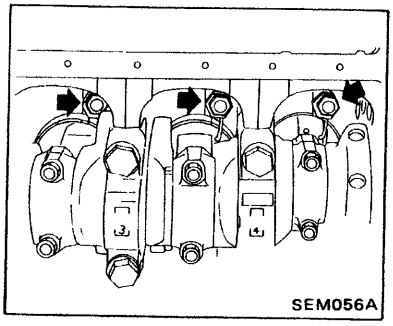

Inspection

1. Blow through outlet of oil jet and make sure that air comes out of inlet.
2. Push cut-off valve of oil jet bolt with a clean resin or brass rod and make sure that cut-off valve moves smoothly with proper repulsion.

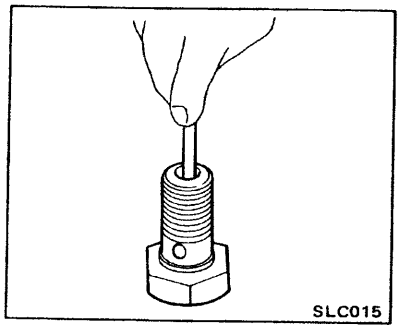

Installation

Install oil jet in the reverse order of removal. Observe the following:
When installing oil jet, align oil jet's boss with hole on cylinder block.

Ⓣ : Oil jet bolt
29 - 39 N·m
(3.0 - 4.0 kg-m,
22 - 29 ft-lb)

CAUTION:
Do not overtighten oil jet bolt as this may result in an extended oil jet bolt and a malfunctioning cut-off valve.

COOLING SYSTEM

COOLING CIRCUIT

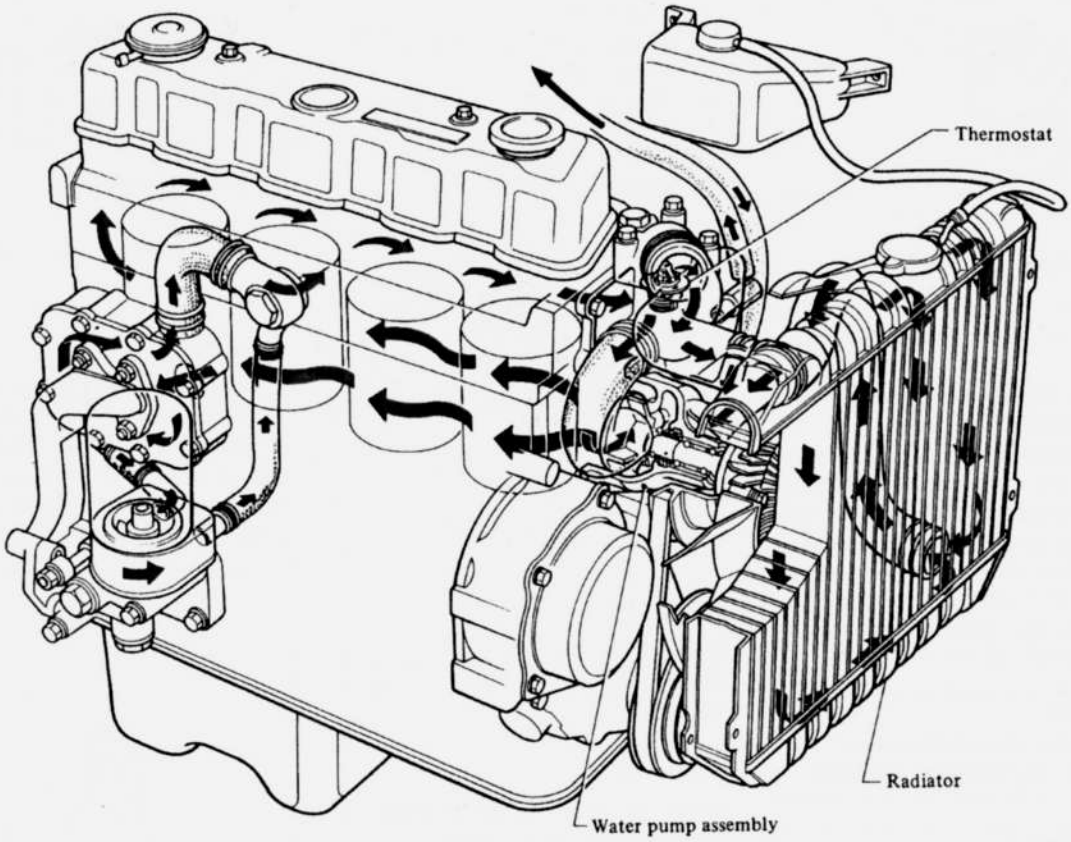

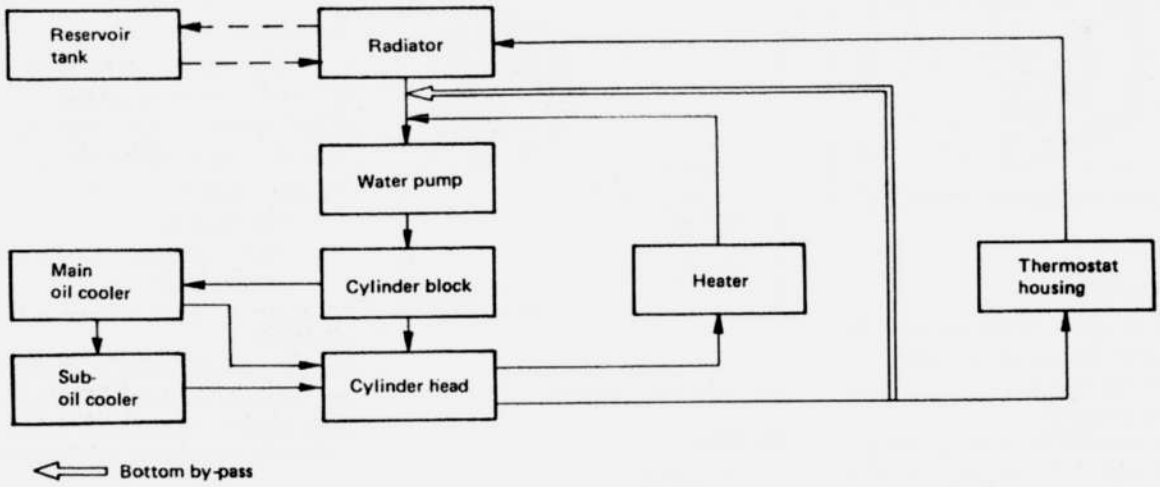

SLC442

WATER PUMP

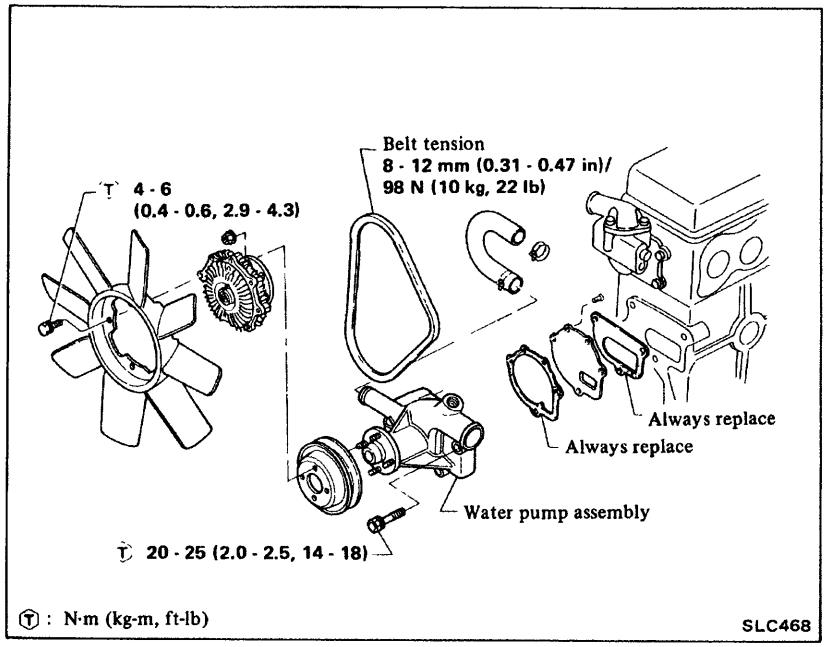

REMOVAL

1. Remove radiator drain cock and radiator cap, and drain coolant.

WARNING:
To avoid the danger of being scalded, never attempt to drain the coolant when engine is hot.

2. Remove radiator shroud.
3. Loosen fan pulley nuts.

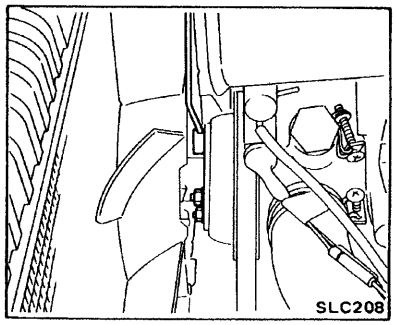

4. Loosen fan belt.
(1) Loosen alternator upper and lower securing bolts.
(2) Move the alternator toward the engine.
5. Remove fan pulley with Tem-coupling and fan.
6. Disconnect coolant hose on thermostat housing side.

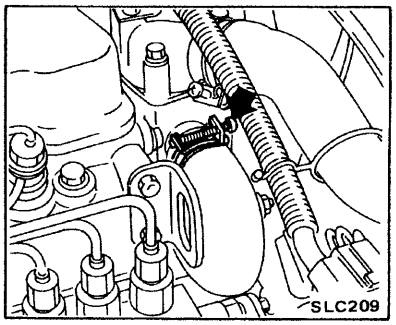

7. Remove water pump.

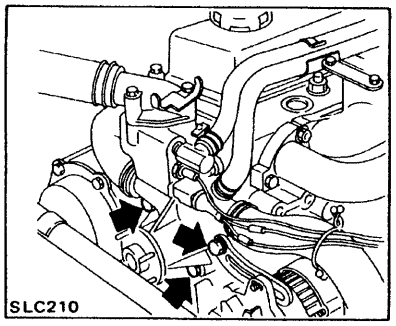

INSPECTION

The water pump and Tem-coupling cannot be disassembled and should be replaced as a unit.

1. Inspect water pump body and vane for rust or corrosion.
2. Inspect water pump bearing.
Check for excessive end play or rough operation.

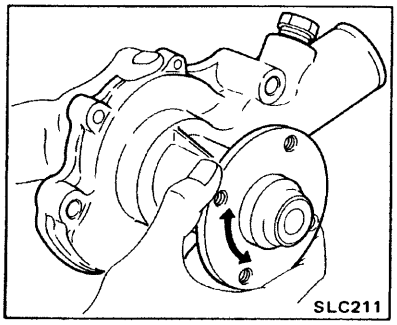

If excessive mechanical seal squeak occurs when engine is running, use suitable water pump seal lubricant to prevent squeak.

3. Check clearance between housing and vane.
If necessary, replace as a unit.

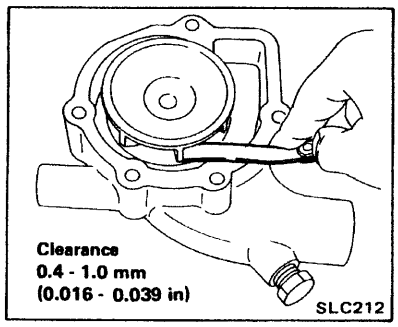

4. Inspect Tem-coupling.
Check coupling for oil leakage or bent bimetal.

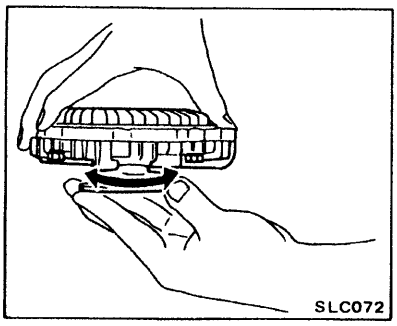

INSTALLATION

Install water pump in the reverse order of removal. Observe the following:

Use new gasket.

THERMOSTAT

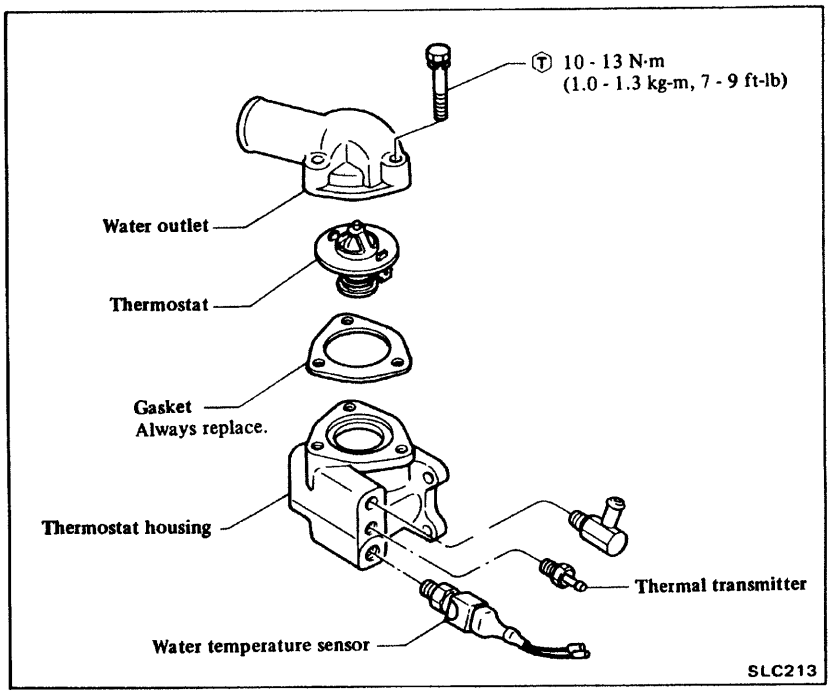

REMOVAL

1. Drain coolant and disconnect radiator upper hose at water outlet.

WARNING:
To avoid the danger of being scalded, never attempt to drain the coolant when the engine is hot.

2. Remove water outlet and then remove thermostat.

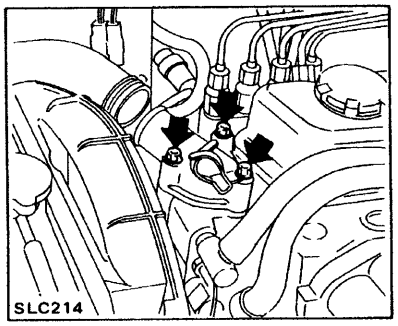

INSPECTION

Inspect thermostat. Replace if necessary.

1. Valve seating condition at ordinary temperature. It should seat tightly.
2. Check valve opening temperature and maximum valve lift.

Valve opening temperature and maximum valve lift:
Refer to S.D.S.

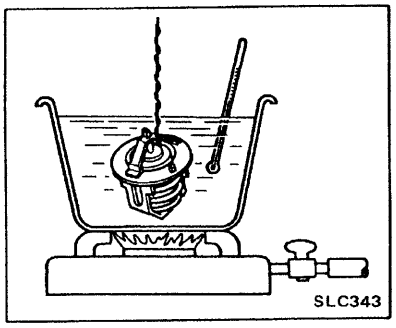

3. Check if valve closes at 5°C (9°F) below valve opening temperature.

It is necessary to check a new thermostat before installing it in engine.

INSTALLATION

Install thermostat in the reverse order of removal. Observe the following:

Use new gasket.

Run engine for a few minutes and check for leaks.

RADIATOR

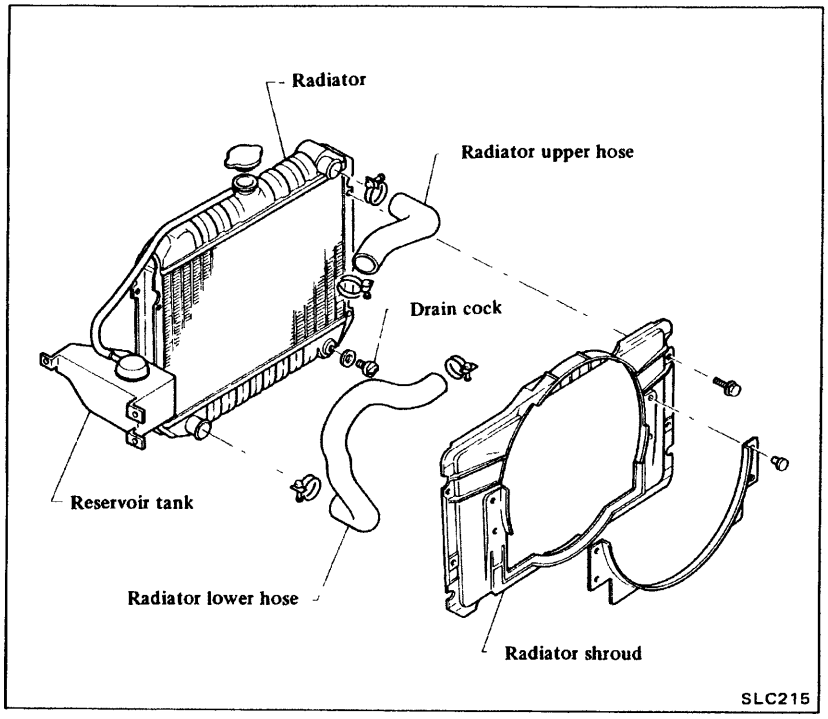

WARNING:
Never remove the radiator cap when the engine is hot. Serious burns can be caused by high pressure fluid escaping from the radiator. Wrap a thick cloth around cap and carefully remove the cap by turning it a quarter turn to allow built-up pressure to escape. Then turn the cap all the way and remove.

INSPECTION

Checking radiator cap

Using cap tester, check the radiator cap relief pressure.

If the pressure gauge drops rapidly and excessively, replace the radiator cap.

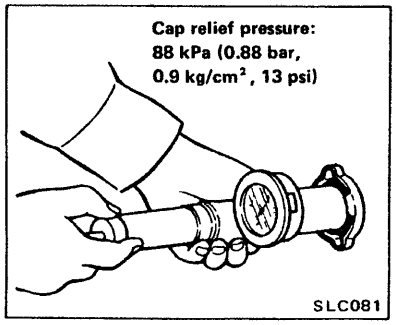

Checking cooling system for leaks

Attach pressure tester, pump tester to the specified pressure.

Check for drop in pressure.

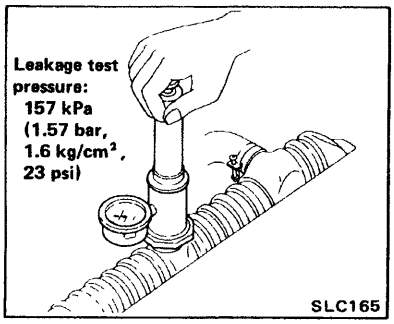

If the pressure drops, check for leaks from hoses, radiator, or water pump.

If no external leaks are found, check heater core, block and head.

REMOVAL AND INSTALLATION

1. Remove battery.
2. Open radiator drain cock and allow to drain into a suitable container.

WARNING:
To avoid the danger of being scalded, never attempt to drain the coolant when the engine is hot.

3. Remove radiator shroud attaching screws and place radiator shroud close to engine.
(Radiator shroud can be removed after removing radiator.)
4. Disconnect radiator upper and lower hoses, and reservoir tank hose.
5. On a car with automatic transmission, disconnect cooler inlet and outlet lines from radiator.
6. Remove radiator.
7. Install radiator in the reverse order or removal.
8. Fill radiator with coolant to the specified quantity.
9. Run engine for a few minutes, and check for leaks.

SERVICE DATA AND SPECIFICATIONS

ENGINE LUBRICATION SYSTEM

GENERAL SPECIFICATIONS

Oil pump		Gear type
Oil filter		Cartridge or paper element type
Oil cooler		Water cooled type
Valve opening pressure kPa (bar, kg/cm², psi)	Oil pump relief valve	736 - 834 (7.36 - 8.34, 7.5 - 8.5, 107 - 121)
	Oil filter relief valve	88 - 108 (0.88 - 1.08, 0.9 - 1.1, 13 - 16)
	Oil cooler relief valve	127 - 167 (1.27 - 1.67, 1.3 - 1.7, 18 - 24)
	Oil pressure regulator valve	304 - 363 (3.04 - 3.63, 3.1 - 3.7, 44 - 53)
	Oil jet (for piston) cut-off valve	177 - 216 (1.77 - 2.16, 1.8 - 2.2, 26 - 31)

INSPECTION AND ADJUSTMENT

Oil pump

Unit: mm (in)

	Standard		Wear limit
	SD 4-cylinder	SD33	
Gear side clearance (Gear to bottom cover)	0.025 - 0.100 (0.0010 - 0.0039)		0.15 (0.0059)
Gear tooth clearance (Gear tooth to body clearance)	Less than 0.12 (0.0047)	Less than 0.21 (0.0083)	0.25 (0.0098)
Gear backlash	0.15 - 0.30 (0.0059 - 0.0118)	0.30 - 0.40 (0.0118 - 0.0157)	0.5 (0.020)
Clearance between bottom cover, and idler shaft and drive shaft	0.50 (0.0197)		

TIGHTENING TORQUE

Unit		N·m	kg-m	ft-lb
Oil filter center shaft	SD22	25 - 29	2.5 - 3.0	18 - 22
	SD33	20 - 25	2.0 - 2.5	14 - 18
Oil pump fixing bolt		13 - 19	1.3 - 1.9	9 - 14
Oil pump cover bolt		16 - 20	1.6 - 2.0	12 - 14
Oil cooler securing bolt		10 - 13	1.0 - 1.3	7 - 9
Oil cooler pipe securing bolt or nut		10 - 13	1.0 - 1.3	7 - 9
Oil jet bolt (for piston)		29 - 39	3 - 4	22 - 29

ENGINE COOLING SYSTEM

GENERAL SPECIFICATIONS

Cooling method	Water cooling force circulation
Water pump type	Centrifugal
Thermostat type	Wax-pellet
Radiator type	Corrugated fin and tube
Tem-coupling Fan speed (at water pump speed 4,000 rpm) rpm/°C (°F)	[380 mm (14.96 in) dia. x 8PP] 3,250 - 3,550/65 - 75 (149 - 167) [385 mm (15.16 in) dia. x 7PP] 2,950 - 3,250/60 - 70 (140 - 158) [430 mm (16.93 in) dia. x 8PP] 3,150 - 3,450/60 - 70 (140 - 158)

INSPECTION AND ADJUSTMENT

Water pump

Unit: mm (in)

Housing and Vane clearance	0.4 - 1.0 (0.016 - 0.039)
Fan belt deflection [Applied force 98N (10 kg, 22 lb)]	8 - 12 (0.31 - 0.47)

Thermostat

	Frigid type	Standard	Tropical type
Valve opening temperature °C (°F)	88 (190)	82 (180)	76.5 (170)
Max. valve lift mm/°C (in/°F)	8/100 (0.31/212)	8/95 (0.31/203)	8/90 (0.31/194)

Radiator

Unit: kPa (bar, kg/cm², psi)

Cap relief pressure	88 (0.88, 0.9, 13)
Leakage test pressure	157 (1.57, 1.6, 23)

TIGHTENING TORQUE

Unit		N·m	kg-m	ft-lb
Water pump	M8	10 - 13	1.0 - 1.3	7 - 9
	M10	20 - 25	2.0 - 2.5	14 - 18
Thermostat housing bolt		10 - 13	1.0 - 1.3	7 - 9
Water outlet bolt		10 - 13	1.0 - 1.3	7 - 9

SPECIAL SERVICE TOOL

Tool number	Tool name
ST19320000	Oil filter wrench 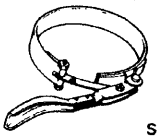 SLC036

ENGINE FUEL

SECTION EF

CONTENTS

INJECTION PUMP ASSEMBLY (Diesel Kiki-Bosch in-line type) ..... EF- 2
- Description ..... EF- 2
- Injection pump ..... EF- 2
- Altitude compensator (Engine on vehicle) ..... EF- 4
- Disassembly ..... EF- 6
- Assembly ..... EF- 9
- Testing of injection pump EF-13
- Feed pump EF-18
- Timer EF-19
- Fuel filter EF-21
- Service data and specifications EF-22
- Special service tools EF-42

INJECTION PUMP ASSEMBLY (Diesel Kiki-Bosch VE-type) EF-44
- Description EF-44
- Injection pump EF-44
- Disassembly (Without high altitude compensator) ... EF-47
- Disassembly (With high altitude compensator) EF-48
- Inspection EF-53
- Assembly EF-53
- Testing of injection pump EF-61
- Service data and specifications EF-66
- Special service tools EF-73

INJECTION PUMP ASSEMBLY (C.A.V.-D.P.A. type) EF-75
- Description EF-75
- Injection pump EF-75
- Feed pump EF-78
- Fuel filter EF-78
- Service data and specifications EF-79

INJECTION NOZZLE ASSEMBLY EF-79
- Removal and installation EF-79
- For Diesel Kiki EF-80
- For C.A.V.-D.P.A. EF-82
- Service data and specifications EF-83
- Special service tools EF-84

CRANKCASE EMISSION CONTROL SYSTEM EF-85
- Description EF-85

INJECTION PUMP ASSEMBLY (DIESEL KIKI-Bosch in-line type)

DESCRIPTION

1. Disassembly and assembly of this pump should be done only in service shops authorized by NISSAN/ DATSUN or by the pump manufacturer.
2. Before removing fuel injection pump from vehicle, check closely to make sure that it is apparently malfunctioning.
Refer to Trouble-shooting in MA Section.

INJECTION PUMP

REMOVAL

1. Remove injection tube.

Cover the delivery holders of the injection pump and injection nozzle assembly with a clean rag to block the entry of dirt.

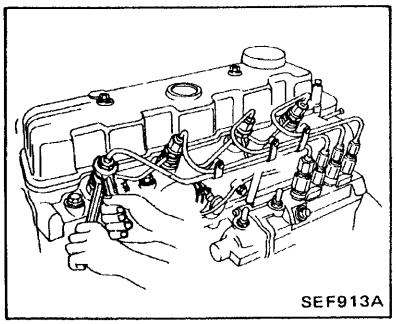

2. Disconnect governor hoses, fuel hoses and engine control wire from injection pump assembly and oil feed pipe (if so equipped).

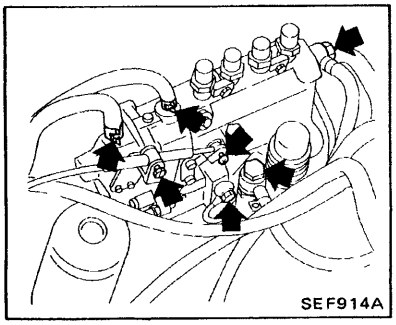

- If equipped with diesel pump controller, remove connecting rod.

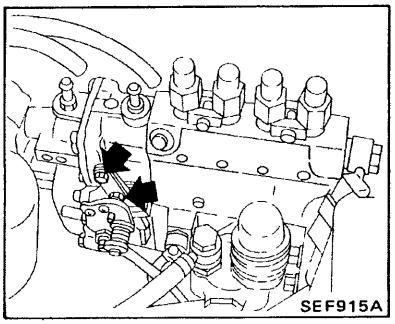

3. Remove timing gear cover.

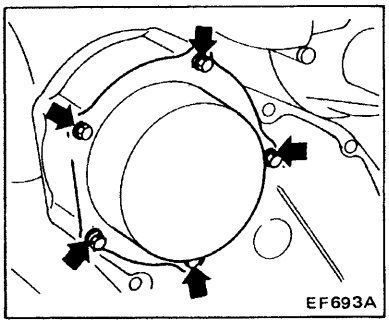

4. Remove timer round nut.

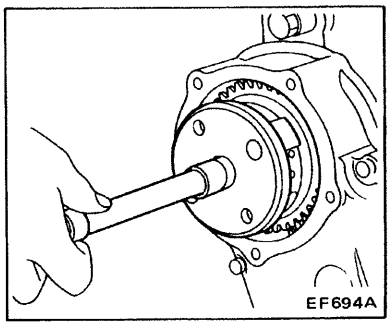

5. Remove timer assembly by threading in **Tool.**

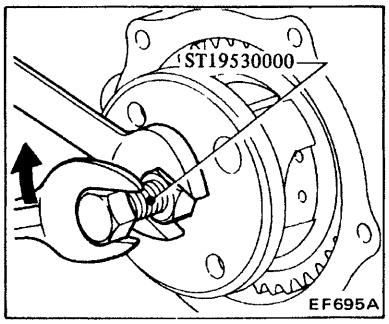

6. Remove injection pump assembly.

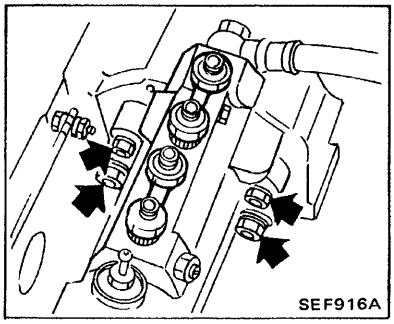

INSTALLATION

1. Install injection pump assembly with **new gasket temporarily**.
2. Install timer assembly.

(1) Align crank pulley and front cover marks so that No. 1 piston is at top dead center.

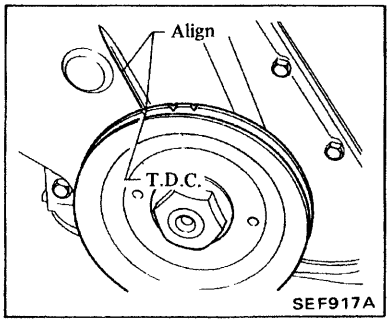

3. Injection pump

(1) Temporarily set injection pump.
(2) Mesh injection pump drive gear with idler gear **at "Y" mark** and then align gear to key way of injection pump camshaft **while turning crank pulley.**

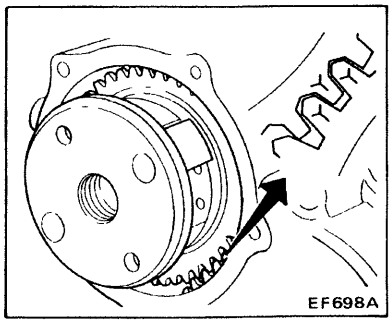

Coat key with grease to prevent it from falling into front cover, and lay a rag on front cover.

(3) Secure timer assembly with lock washer and round nut.

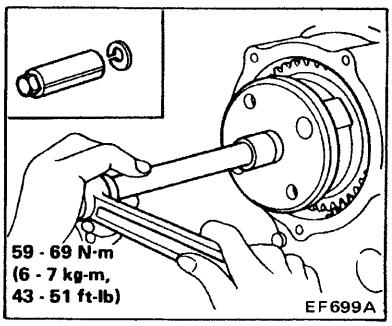

ADJUSTMENT

1. Turn crank pulley in standard rotating direction and set No. 1 piston at applicable B.T.D.C.
Select applicable B.T.D.C. from chart below.

Engine	B.T.D.C.
SD23 and SD25 for 720	B point
SD22 for 720	A point
SD25 for F22, H40 and W40	B point

In case there are only two marks on crank pulley, select the right mark as applicable B.T.D.C.

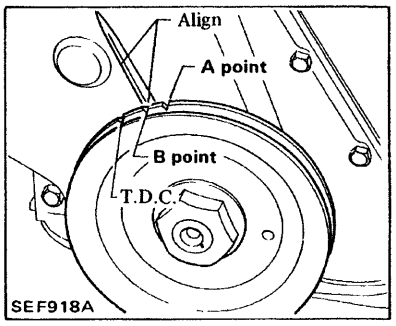

2. Remove all injection tubes and governor hoses. Also remove diesel pump controller connecting rod (if so equipped).
3. Remove No. 1 lock plate and delivery valve holder, and then pull out delivery stopper (if so equipped) and delivery valve spring.

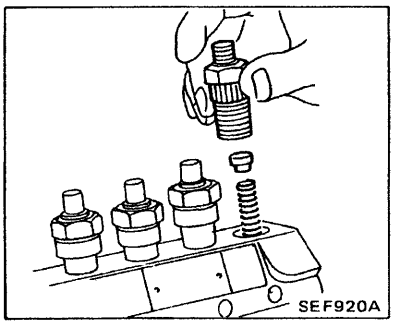

4. Install delivery valve holder **without delivery valve spring and delivery valve stopper.**

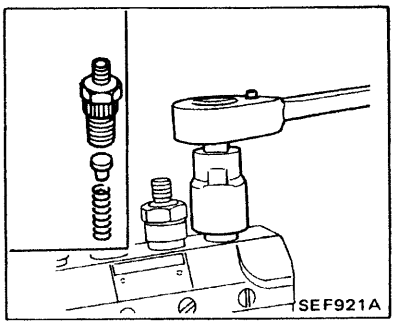

5. Connect test tube to the No. 1 delivery valve holder.
6. **Push injection pump assembly fully down toward engine side.**

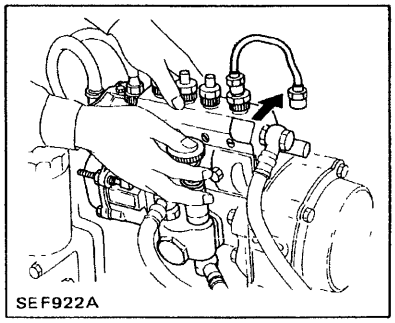

7. While feeding fuel by operating priming pump, slowly move injection pump **until fuel flow from No. 1 injection tube stops.**

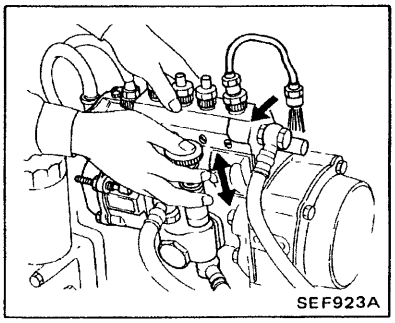

8. Fix injection pump **in the position where fuel flow stops.**

9. Check whether or not the injection timing marks of injection pump and front plate are aligned. **If not aligned, stamp a new mark on front plate.**

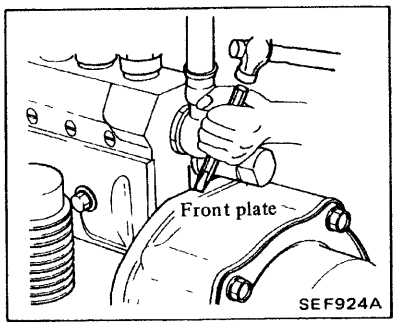

10. Remove No. 1 test tube and delivery valve holder.
11. **Install delivery valve spring, delivery valve stopper and delivery valve holder.**

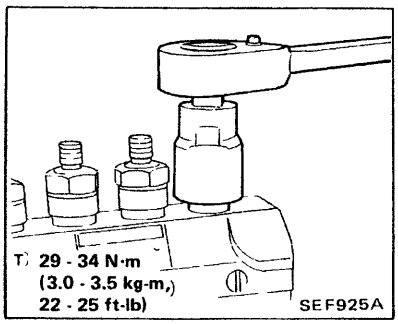

12. Install injection tubes, new timing cover gasket and timer cover.

Coat sealant with new timing cover gasket.

13.
- Connect governor hoses, fuel hoses and engine control wire.
- If equipped with diesel pump controller, connect connecting rod.

14. Bleed air. Refer to Bleeding Fuel System.

ALTITUDE COMPENSATOR (Engine on vehicle)

REMOVAL AND INSTALLATION

1. Remove altitude compensator from bracket.

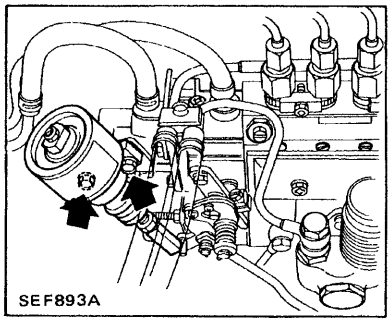

2. Disconnect vacuum hose and remove bracket from injection pump.

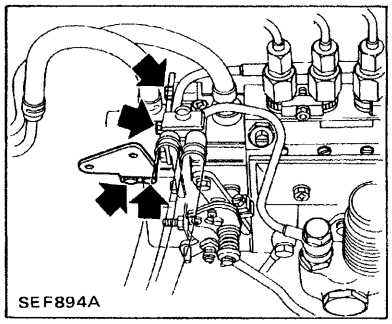

3. Install altitude compensator in the reverse order of removal.

INSPECTION

1. Check for loose connections.
2. Check for altitude compensator movement.

If it does not move, contact a service shop authorized by the pump manufacturer.

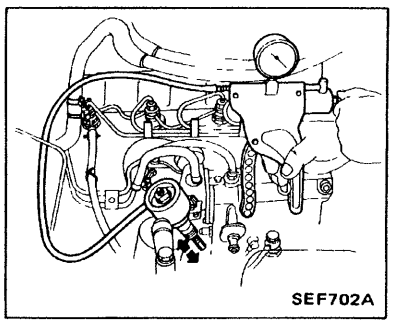

ADJUSTMENT

This adjustment should be performed with injection lever in free position.

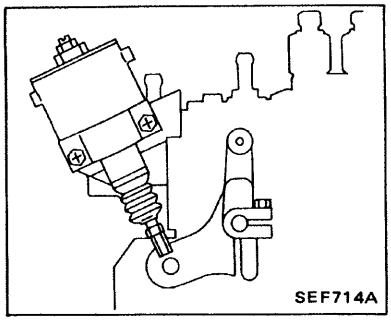

1. Disconnect diesel pump controller rod. (If so equipped)

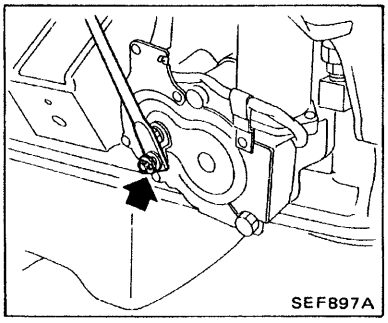

2. Loosen lock nut and cap nut of altitude compensator.

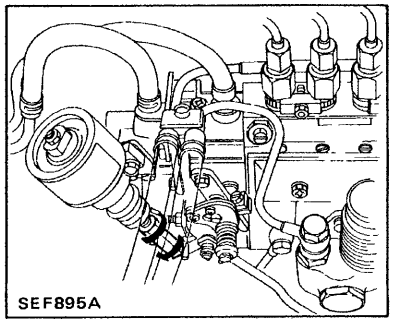

3. Turn cap nut touch with injection lever and temporary tighten lock nut.

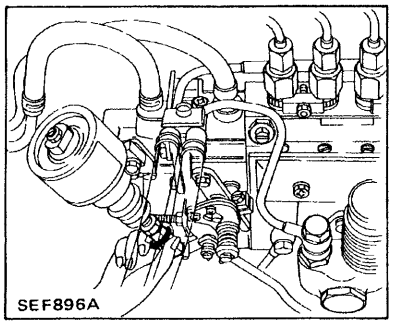

4. Determining position of cap nut

(1) Precise method

a. Using a barometer, measure atmospheric pressure in areas where vehicles are to be operated.

b. Determine how much the cap nut should be loosened by using the equation below.

$$R = 9.878 \times 10^{-3} \times (760 - P)$$

where

R: Amount of loosening of cap nut (No. of revolutions of cap nut)

P: Measured atmospheric pressure (mmHg)

Reference table

Atmospheric pressure P kPa (mbar, mmHg, inHg)	101.3 (1,013, 760, 29.92)	100.0 (1,000, 750, 29.53)	93.3 (933, 700, 27.56)	86.6 (866, 650, 25.59)	80.0 (800, 600, 23.62)	73.3 (733, 550, 21.65)	66.7 (667, 500, 19.69)
Amount of loosening of cap nut (No. or R revolutions of cap nut)	0	0.1~0.3	0.4~0.8	0.9~1.3	1.4~1.8	1.9~2.3	2.4~2.6

(2) Expedient method

Determine how much the cap nut should be loosened, according to altitude above sea level.

Approximate altitude m (ft)	0 (0)	120 (394)	700 (2,297)	1,300 (4,265)	2,000 (6,562)	2,700 (8,859)	3,400 (11,155)
Amount of loosening of cap nut (No of revolutions of cap nut)	0	0.1~0.3	0.4~0.8	0.9~1.3	1.4~1.8	1.9~2.3	2.4~2.6

5. Mark cap nut indicating the number of times cap nut should be rotated according to altitudes in which vehicles are to be operated.
6. Tighten lock nut.
7. Install diesel pump controller rod.

Ensure that bolt comes into contact with injection pump lever. If it does not, loosen the bolt and readjust.

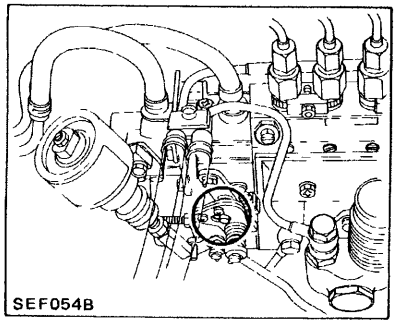

BLEEDING FUEL SYSTEM
(Engine on vehicle)

Air should be bled out of fuel system when injection pump is removed or fuel system is repaired.

1. Remove the cap that covers the priming pump ②.
2. Turn the priming pump ② counterclockwise.
3. Loosen the air vent screws ①.
4. Move the priming pump ② up and down until **no further air-bleed comes out of the air vent screws ①.**
5. Tighten the air vent screws ①.
6. Push and turn the priming pump clockwise.
7. Install the cap.

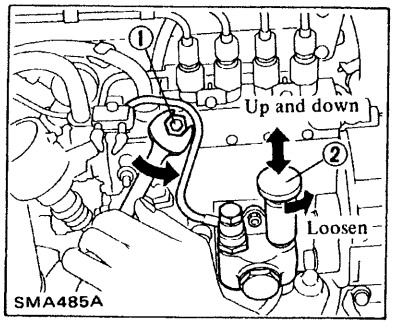

WARNING:
Wipe off fuel around engine.

If engine will not start, loosen injection tubes at nozzle side and crank engine until fuel overflows from injection tubes.
Tighten injection tube flare nuts.

IDLE AND MAXIMUM SPEED ADJUSTMENTS

Refer to Section MA for these adjustments.

DISASSEMBLY

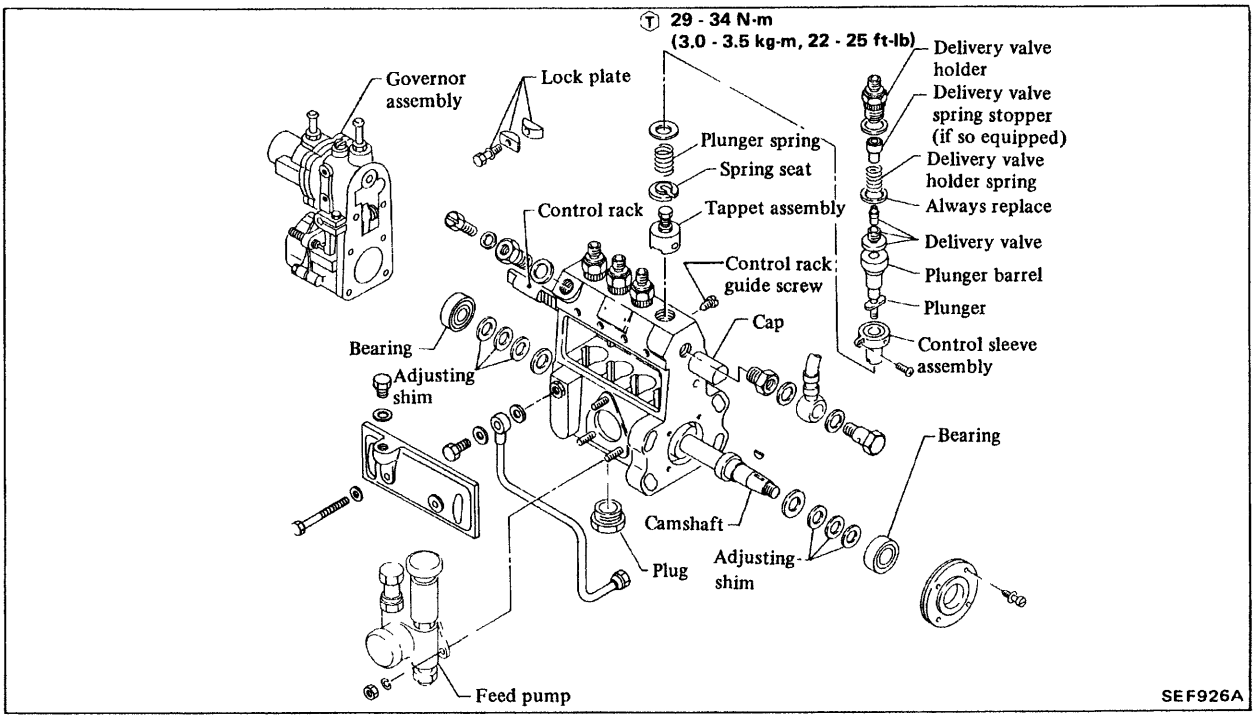

PREPARATION

- Before performing disassembly and adjustment, test fuel injection pump and note test results except when testing is impossible.
- Prior to beginning to disassemble fuel injection pump, clean all dust and dirt from its exterior.
- Clean work bench completely, removing all foreign matter.
- Collect only those service tools necessary for disassembling and reassembling.
- Be careful not to bend or scratch any parts.
- Be careful not to mix parts of different cylinders.

Special tools for disassembling and reassembling fuel injection pump

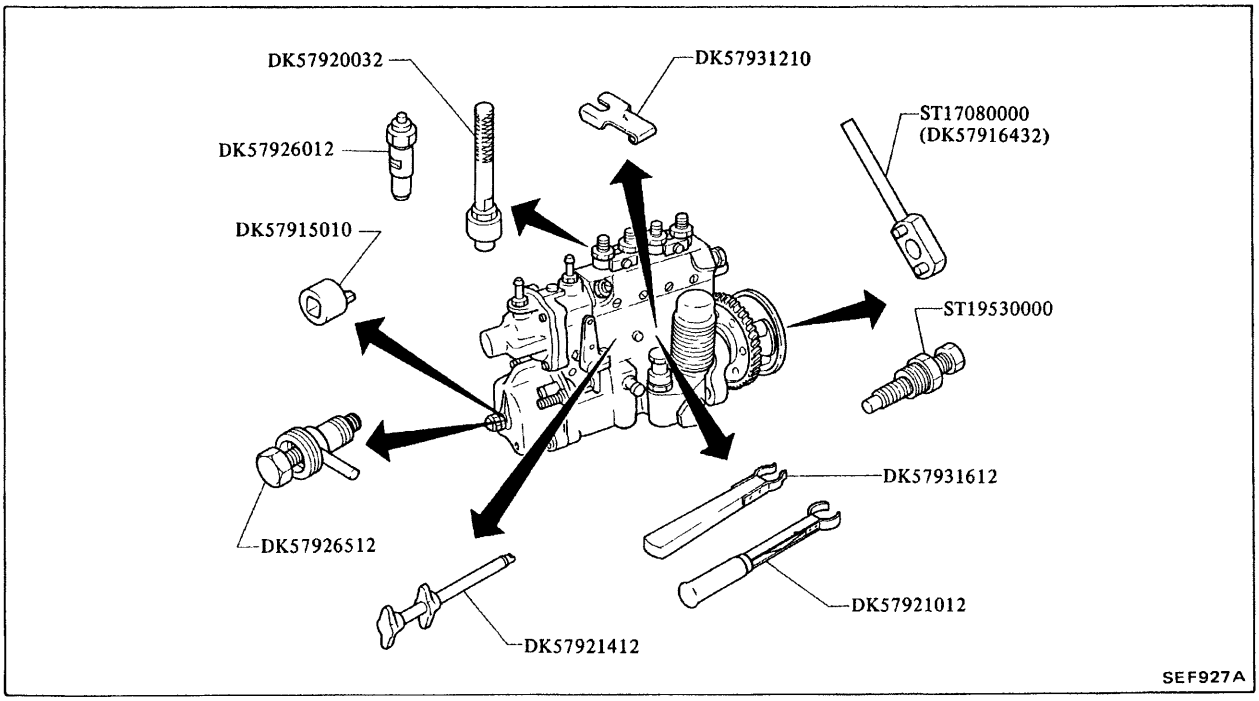

1. Drain injection pump oil.
2. Attach injection pump with Tool.

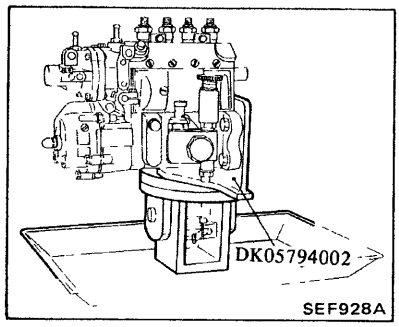

3. Remove feed pump and cover plate.

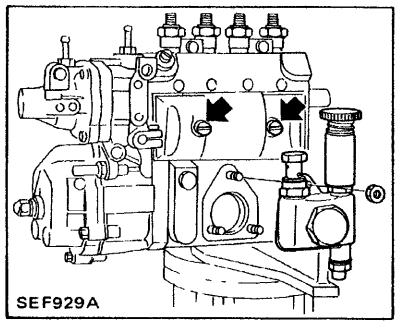

4. Check backlash between control rack and control pinion.

Refer to Inspection.

5.

(1) **Temporarily** install timer to injection pump.

(2) Turn timer until tappet is raised to T.D.C. for each cylinder and then install Tool between tappet adjusting bolt and nut.

If Tool cannot be installed, loosen tappet adjusting bolt.

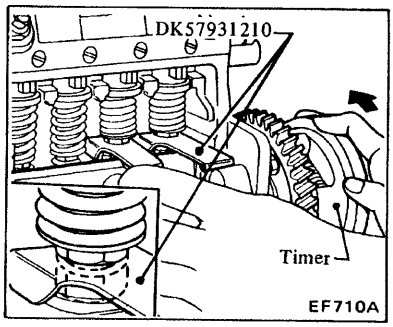

6. Check camshaft end play.

Refer to Inspection.

7. Remove mechanical governor cover, diaphragm cover, diaphragm, flyweight and governor housing.

Refer to Governor for removal.

8. Remove plug.

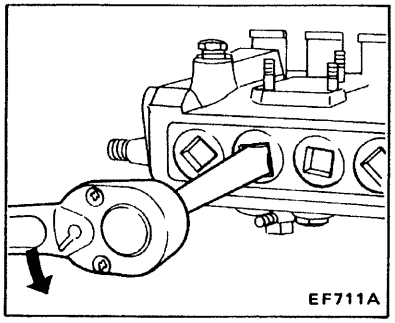

9. Draw out camshaft.

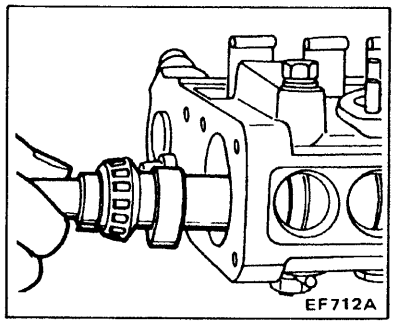

10. Remove Tool DK57931210 by pushing tappet with Tool DK57921012.

CAUTION:

Be careful not to damage housing plug hole threads.

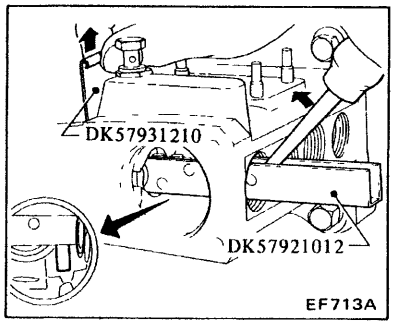

11. Withdraw tappet assembly with Tool DK57931612 from camshaft chamber by loosening Tool DK57921012.

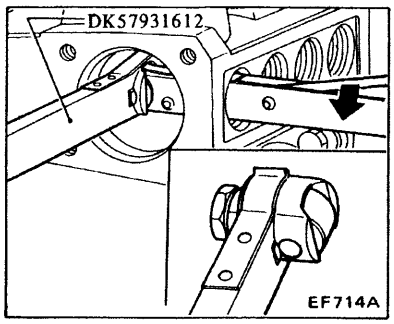

12. Remove plungers together with lower spring seat with Tool.

CAUTION:

Lay out plunger and plunger barrel in order in a pan of kerosene or solvent. Do not touch plunger with hand.

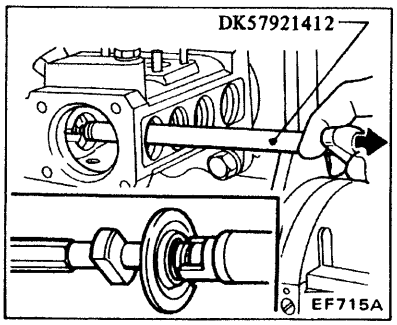

13. Remove plunger spring, upper spring seat and control sleeve assembly.

When disassembling control sleeve assembly, put matching mark.

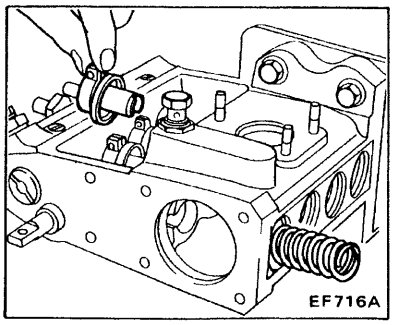

14. Remove lock plate.
15. Remove delivery valve holder and then remove delivery holder spring, and delivery valve stopper.

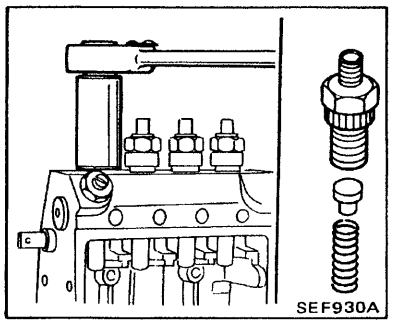

16. Remove delivery valve by threading in Tool.

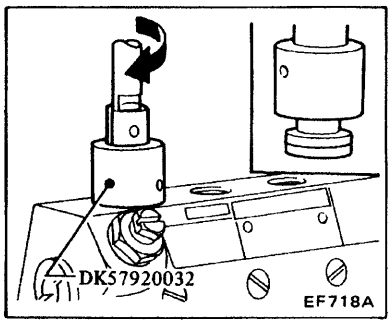

17. Remove plunger barrel by pushing it from below.

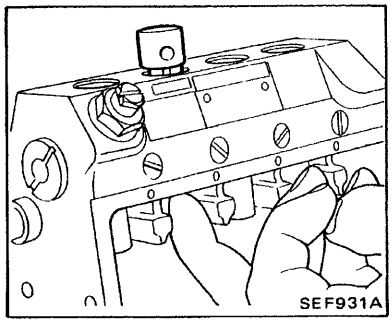

18. Remove cap and bolt and nut on control rack.

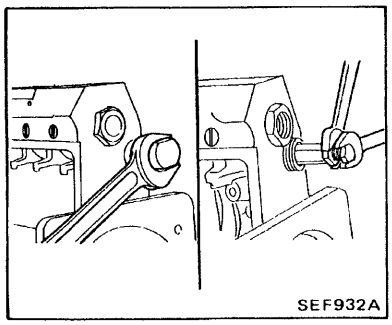

19. Remove control rack guide screw and then draw out control rack.

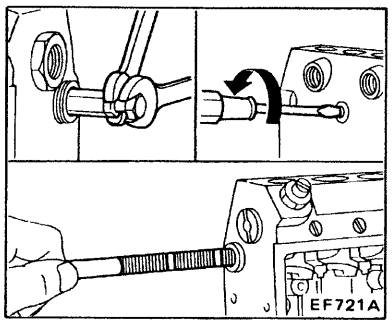

INSPECTION

Pump housing

1. Inspect for damage, cracks, etc.
If excessively damaged, replace it with a new housing.
2. Check plunger barrel drum surface for proper contact with plunger barrel seating hole. Also, check for damage or cracks.

If faulty, replace with a new plunger and plunger barrel.

3. Measure tappet to housing clearance. If worn beyond wear limit, replace tappet or housing.

Tappet to housing clearance (A-B):
Limit
0.2 mm (0.008 in)

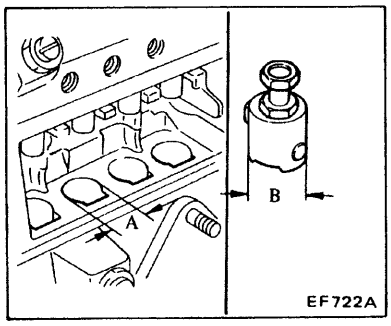

Camshaft

1 Measure cam profile for uneven or excessive wear. If excessively or unevenly worn, replace camshaft with a new one.
2. Check for damage, cracks, etc.

If excessively damaged, replace it with a new one.
3. Measure camshaft end play by pushing camshaft from timer end so as to move camshaft in shaft direction.

Camshaft end play
Standard:
SD 4-cylinder
0 - 0.02 mm (0 - 0.0008 in)
SD33
0 - 0.03 mm (0 - 0.0012 in)
Limit:
0.1 mm (0.004 in)

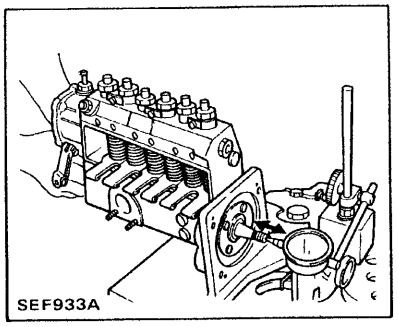

If camshaft end play is over limit, adjust as follows:
(1) Remove bearing inner race from camshaft.
(2) Based upon end play measurement, increase or decrease adjusting shims.

Use the same shim thickness on each end.

(3) Re-install bearing inner race on camshaft.

Bearings

Check for wear or discoloration. If faulty, replace with a new one.

Plunger and plunger barrel

The operation of the plunger should be checked based on the results of fuel injection volume measurement.

Oil-tightness check

1. Thoroughly clean plunger barrel in clear kerosene or solvent.
2. Tilt it to approximately 60°. Then, let plunger slide down through barrel, making sure that plunger slides

smoothly. Repeat this procedure by turning plunger to various positions, **making sure that plunger slides smoothly in any of the positions.**

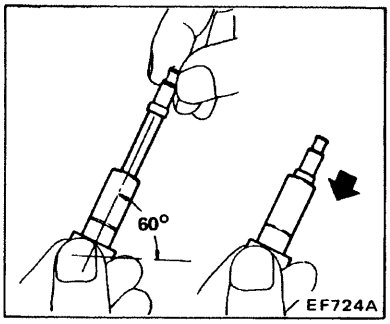

When replacement is required, **replace both the plunger and plunger barrel as a set.**

Delivery valve

Air-tightness check

1. Thoroughly clean delivery valve and delivery valve seat in clear kerosene or solvent.
2. Place finger over lower part of valve seat, lightly depress delivery valve with your finger tip, and **make sure that valve springs back when released.** If valve falls to valve seat, it is not operating properly due to excessive piston wear. If faulty, replace with a new valve and valve seat assembly.

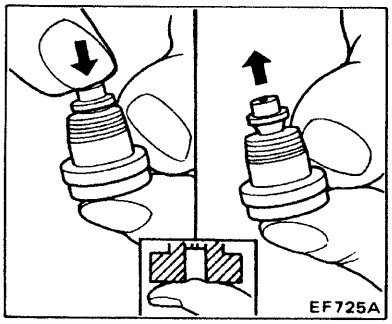

Tappet

Inspect tappet, roller, roller bushing, and pin for wear or damage. If faulty, replace with new components, as required.

Adjusting bolt head recess wear limit:
0.20 mm (0.0079 in)
Roller end play limit:
0.20 mm (0.0079 in)

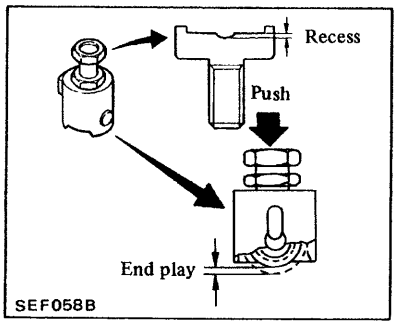

Control rack and control sleeve assembly

1. Inspect control rack for bending and damage.
   If faulty, repair or replace with a new control rack, as required.
2. Measure control sleeve to plunger lug clearance. If worn excessively, replace control sleeve or plunger, as required.

Control sleeve to plunger lug clearance (A-B):
Limit
0.12 mm (0.0047 in)

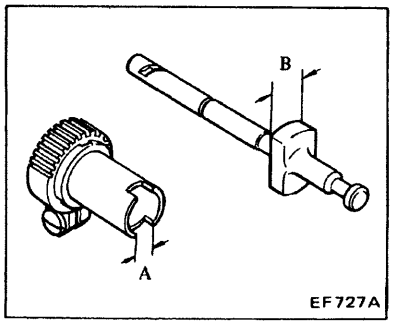

3. Measure backlash between control rack and control pinion.

Backlash between control rack and control pinion:
Limit
0.30 mm (0.0118 in)

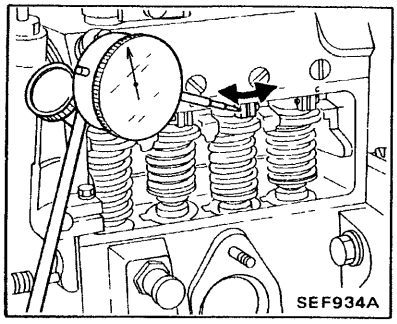

Spring

Inspect plunger and delivery valve springs for damage and squareness.

ASSEMBLY

Clean parts thoroughly and apply a thin coat of engine oil to rotating and sliding parts.

Assemble injection pump in the reverse order of disassembly.

Note the following items.

1. Set plunger barrel in position, with hole in barrel aligned with dowel pin of housing.

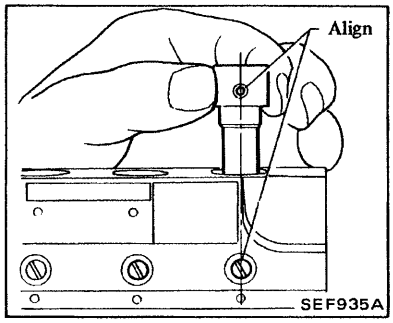

2. Install delivery valve with new gasket, setting it into position by tapping **lightly** with Tool.

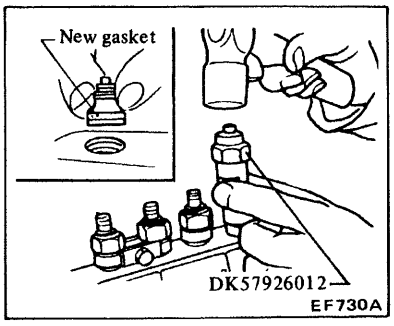

3. Install delivery valve spring delivery valve stopper (if so equipped) and delivery valve holder.

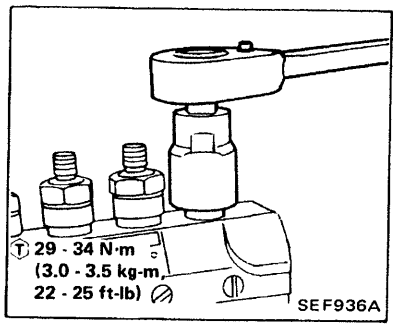

4. Install lock plates.

5.

(1) Set the control rack so that **marks on both sides are same distance "A" from each end of pump housing.**

(2) Adjust bolt length and tighten lock nut.

(3) **Then install control rack guide screw.**

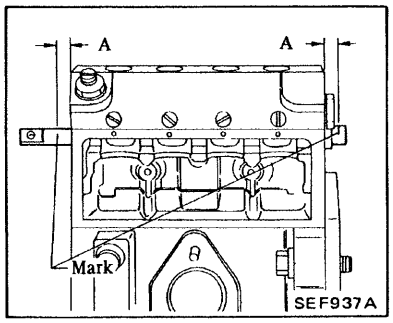

6. Install control sleeve assembly **with gap of control sleeve facing straight up.** Then install upper spring seats and plunger springs.

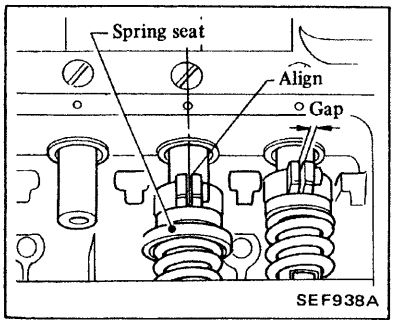

7. Install plunger together with lower spring seat by using Tool **with plunger alignment mark facing upward (cover side of pump housing).**

Do not use plunger with a barrel from a different cylinder.

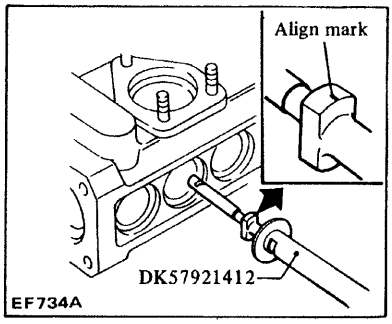

8. After adjusting tappet height to 34.5 to 35.0 mm (1.358 to 1.378 in), install tappet assembly by reversing the removal procedure.

Ⓣ : Lock nut
25 - 29 N·m
(2.5 - 3.0 kg-m, 18 - 22 ft-lb)

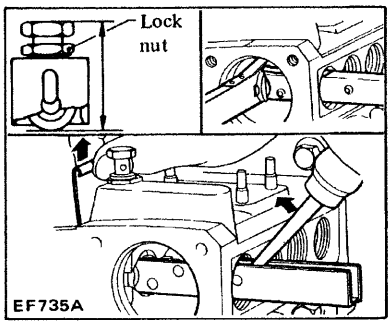

9. Install camshaft so that **its alignment mark is toward timer (for SD33, so that the mark is toward governor).** For SD33, apply grease to center bearing, and install together with camshaft.

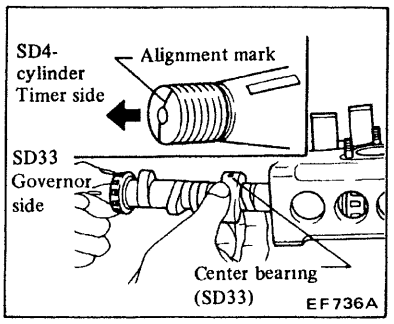

10. Install governor housing and then adjust camshaft end play.

Refer to Inspection.

11. Install screw plug on bottom of pump housing.

Seal the plug with sealant.

Ⓣ : Screw plug
54 - 74 N·m
(5.5 - 7.5 kg-m,
40 - 54 ft-lb)

12. Temporarily install timer and remove Tool DK57931210 while turning timer.

13. Measure control rack sliding resistance.

Control rack sliding resistance:
Less than
1.471 N (150 g, 5.29 oz)

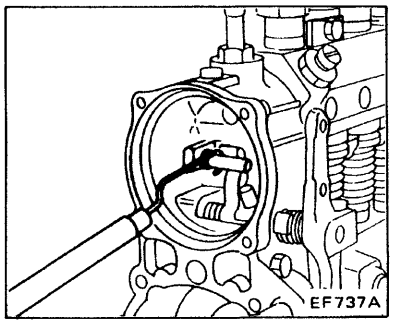

14. Install flyweight, diaphragm, diaphragm cover and mechanical governor cover in that order.

Refer to Governor for installation.

15. Install control rack cap, cover and feed pump.

GOVERNOR

Disassembly

RBD-MZ type

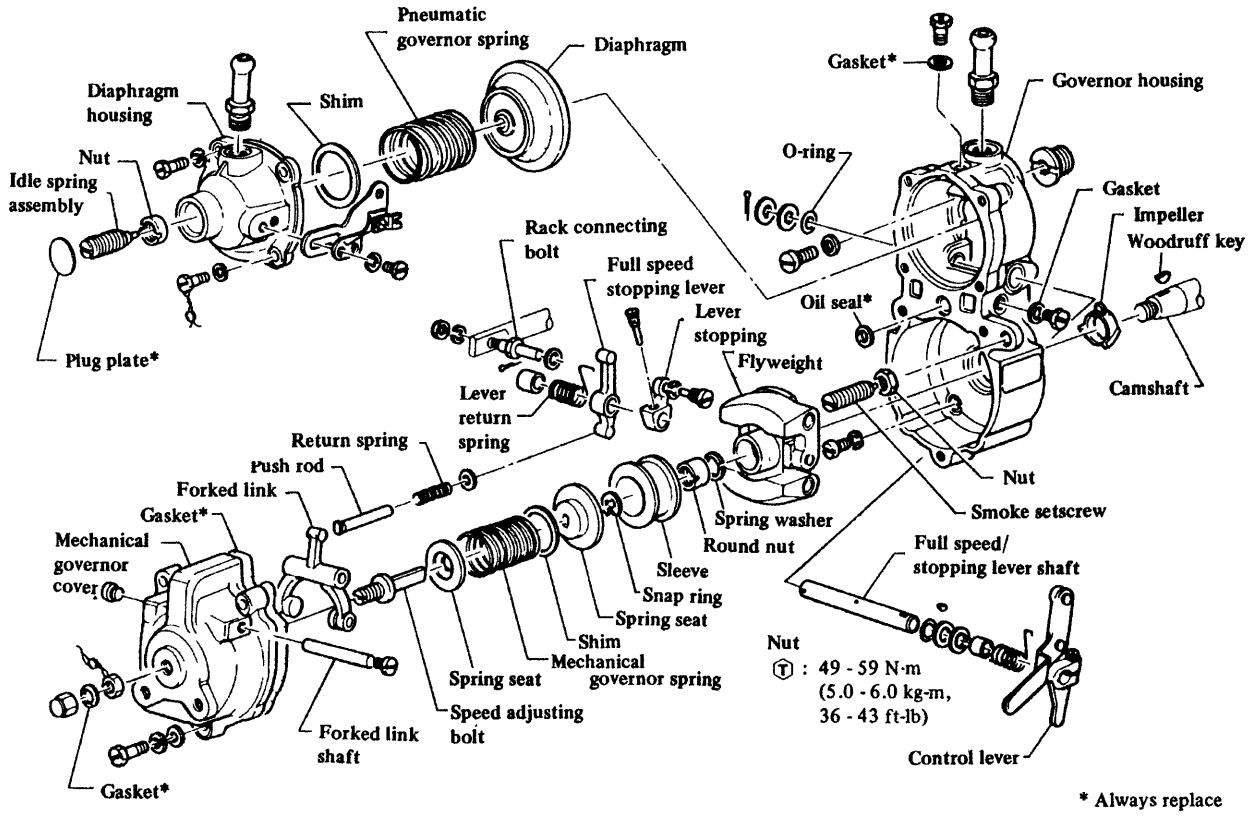

MZ type

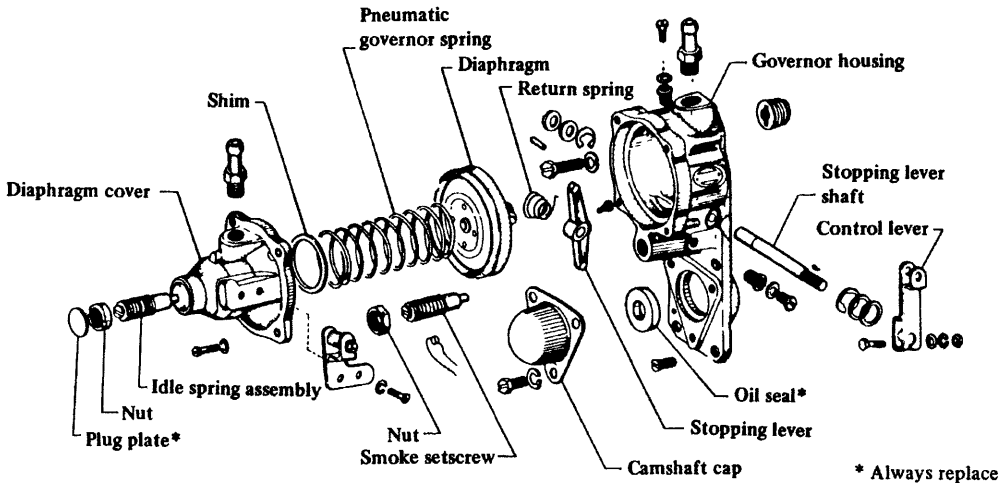

EF749A

1. Attach injection pump with Tool DK05794002 (Universal vise) and then remove feed pump and cover plate.
2. Install Tool between tappet adjusting bolt and nut.

Refer to Injection pump for tappet holder installation.

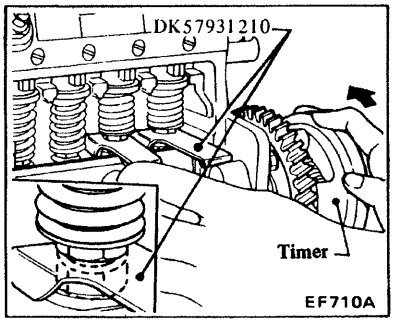

3. Remove diaphragm cover, pneumatic governor spring and shims.

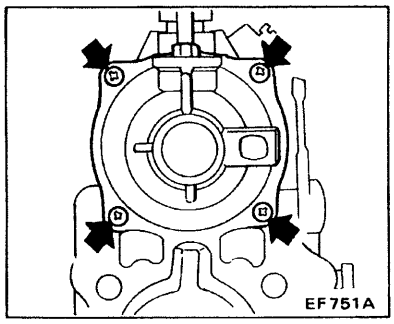

4. Remove diaphragm by pulling cotter pin out **with pulling it out from housing.**

Be careful not to damage the diaphragm.

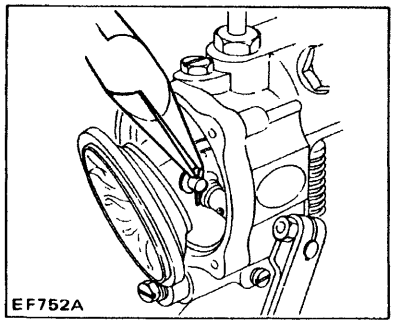

5.
- MZ governor
  Remove camshaft cap.

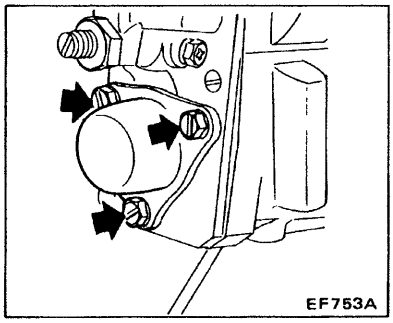

- RBD-MZ governor

(1) Remove mechanical governor cover gasket, push rod, spring and shim.

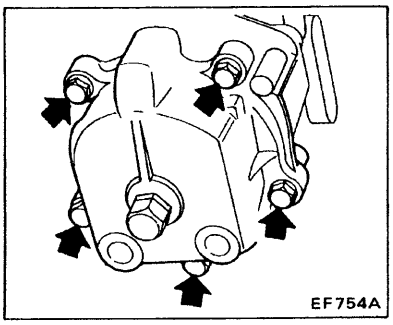

(2) Attach timer and lock camshaft with Tool ST17080000 (DK57916-432).

Remove round nut with Tool DK57915010.

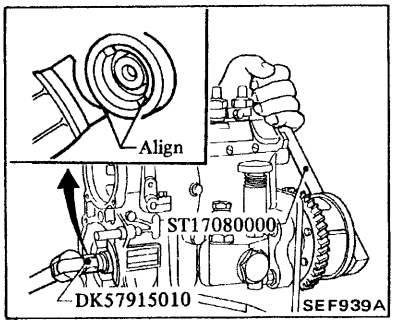

(3) Remove flyweight with Tool.

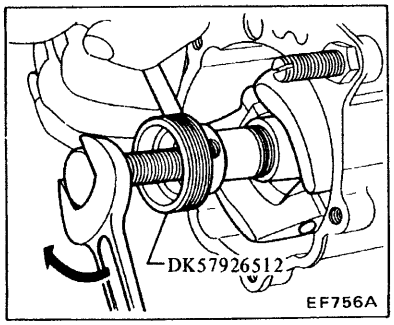

6. Remove governor housing.

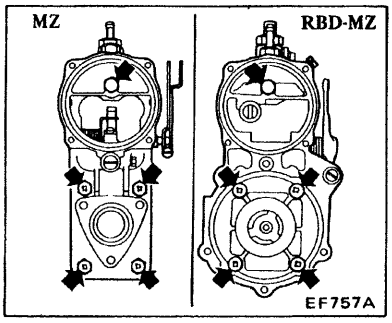

Inspection

Inspect all parts for cracks, damage, deformed threads, rust formation, etc. Repair or replace parts as necessary.

Diaphragm

Even the smallest hole in it can adversely affect governor performance.

Visually inspect the diaphragm for broken surface, and the caulked areas for damage. Replace the diaphragm as an assembly when faulty.

CAUTION:
- **Do not allow gasoline to be left on diaphragm.**
- **Use diaphragm oil.**

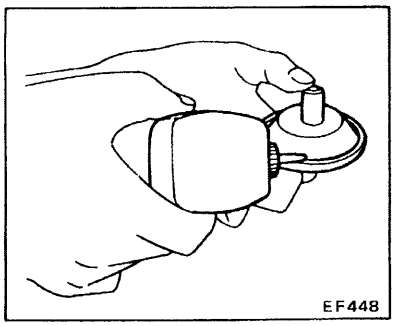

Springs

Check all springs for breakage, fatigue or rust formation. If necessary, replace.

Assembly

Assemble governor in the reverse order of disassembly, **noting following item.**

Do not install plate plug until idle adjustment is made.

1. Make sure that impeller is installed to the camshaft **with flat blade side toward governor.** (RBD-MZ Governor)

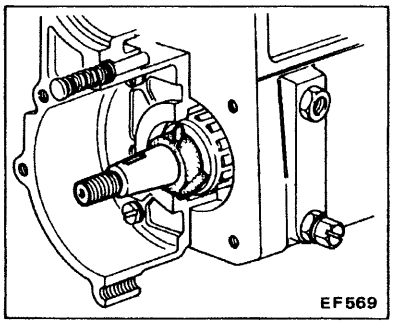

2. Apply liquid sealant to new governor cover gasket.

Ⓣ : **Flyweight round nut:**
49 - 59 N·m
(5.0 - 6.0 kg-m,
36 - 43 ft-lb)

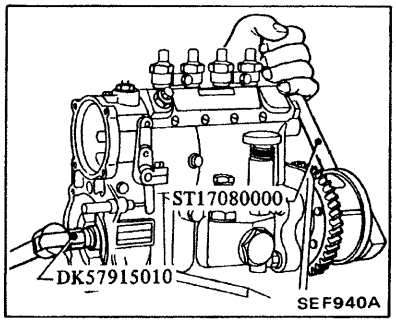

3. Apply diaphragm oil to diaphragm.

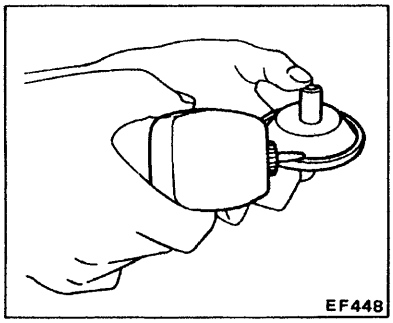

4. Coat caulking part of diaphragm and governor housing with grease. **Be careful not to allow grease to get on the diaphragm surface.**

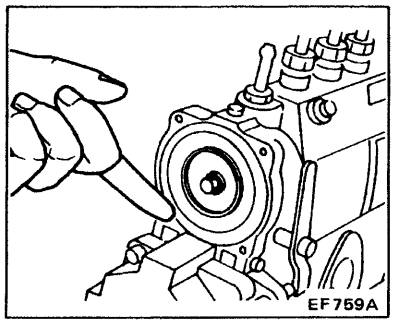

5. Adjust injection pump with a pump tester. **Refer to "Testing Injection Pump for Governor".**

TESTING OF INJECTION PUMP

PREPARATION

Injection pump test conditions

Nozzle	KV11257800
Nozzle holder	KV11257802
Nozzle starting pressure kPa (bar, kg/cm², psi)	17,162 (171.6, 175, 2,489)
Nozzle tube Inner dia. x outer dia. x length mm (in)	KV11257805 2.0 x 6.0 x 600 (0.079 x 0.236 x 23.62)
Fuel feed pressure kPa (bar, kg/cm², psi)	147 - 157 (1.47 - 1.57, 1.5 - 1.6, 21 - 23)
Fuel (test oil)	ISO 4113 or SAE Standard Test Oil (SAE J967d)
Fuel temperature °C (°F)	40 - 45 (104 - 113)
Rotating direction	Right (observed from the drive shaft)
Injection sequence	SD 4-cylinder 1-3-4-2 SD33 1-4-2-6-3-5

1. Prepare necessary service tools.

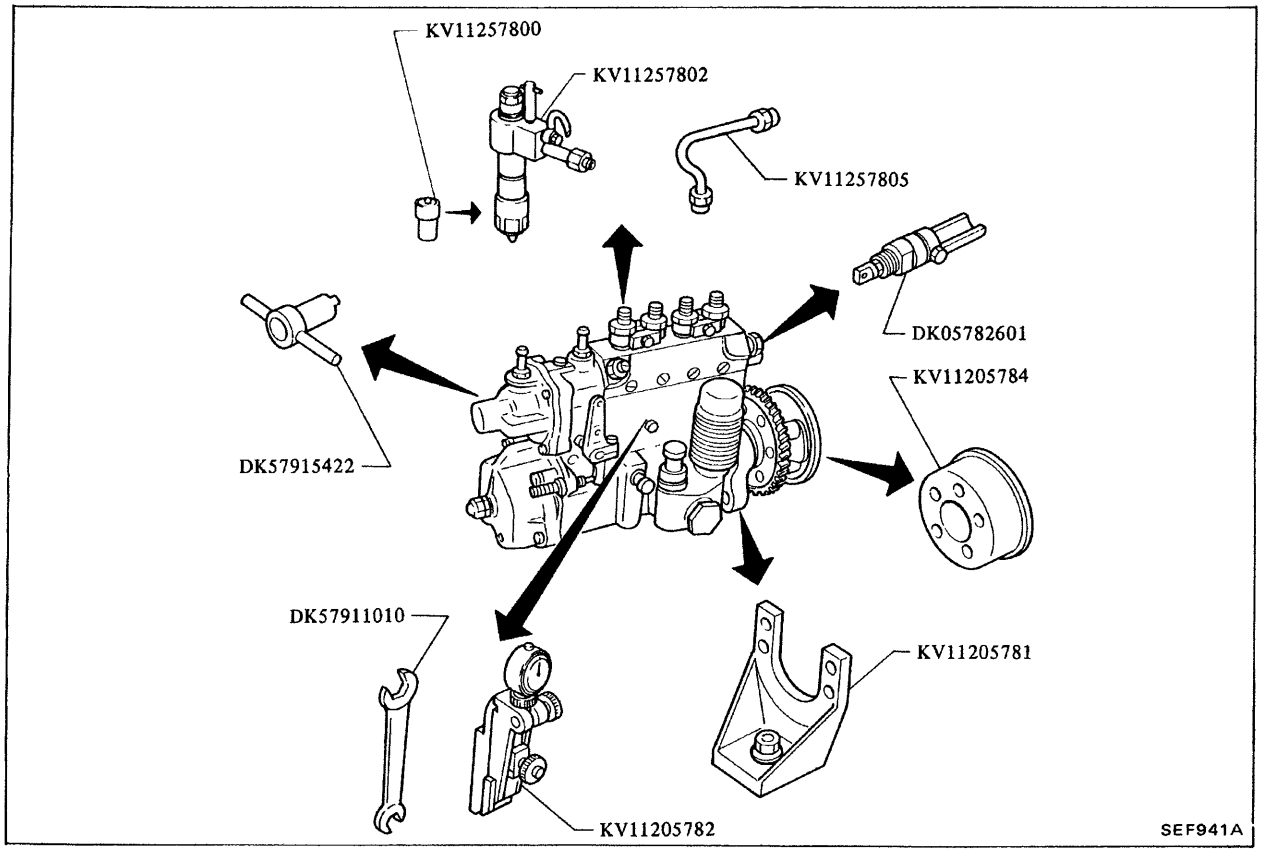

2. Remove fuel feed pump and cover plate.
3. Remove timer drive gear and attach coupling.

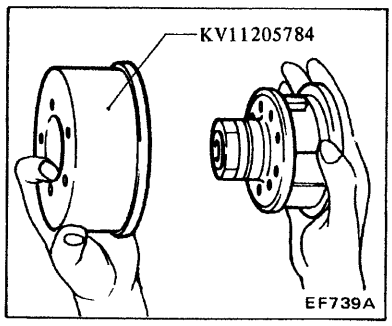

4. Install fuel injection pump on the bed of tester with Tool KV11205781. Then attach pump to timer.
5. Connect coupling to tester drive shaft with coupling disc.
6. Connect flexible hose from tester to nozzle tube on pump.

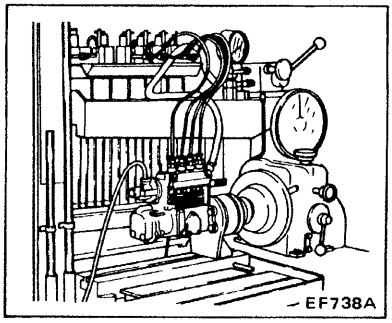

7. Remove cap and apply tester dial to camshaft for measurement of rotating angle.
8. Bleed air from injection pump.

ADJUSTMENT

Adjusting injection timing

1. Adjust No. 1 injection timing.

(1) Set a Tool to No. 1 cylinder tappet.

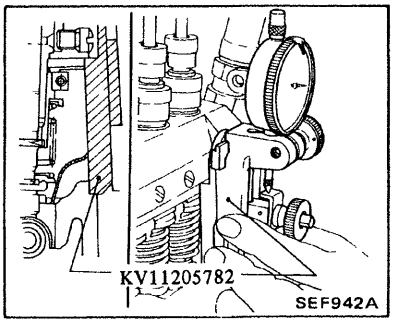

(2) Set No. 1 tappet to bottom dead center **(B.D.C.) position** and set dial gauge at "0".

(3) Loosen valve of nozzle holder for testing.

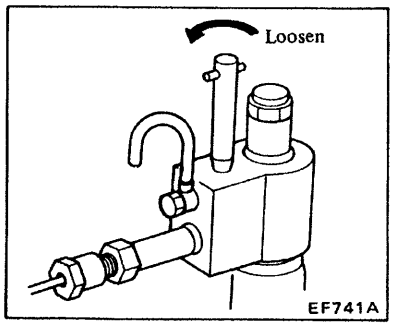

(4) Rotate camshaft (pump tester) clockwise, and measure the lift of 1st plunger when fuel flow from test nozzle stops.

Pre-stroke:
Refer to S.D.S.

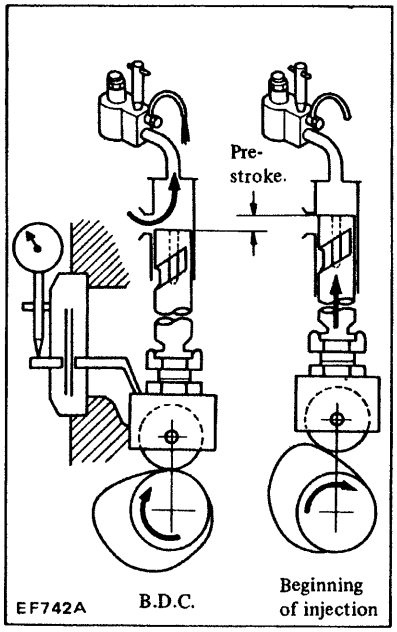

2. If pre-stroke is not within specification, adjust injection timing.
(1) Loosen lock nut of tappet.
(2) Adjust tappet height by turning adjusting bolt.

- **If the pre-stroke is greater than S.D.S., turn adjusting bolt counter-clockwise.**
- **If the pre-stroke is less than S.D.S., turn adjusting bolt clockwise.**

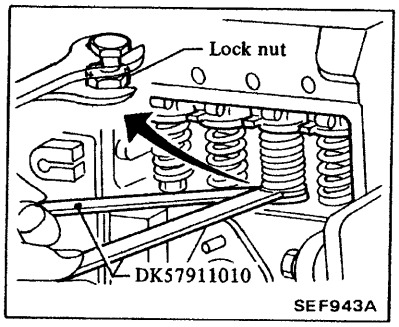

(3) Tighten adjusting bolt lock nut.

Ⓣ : **Lock nut**
25 - 29 N·m
(2.5 - 3.0 kg-m,
18 - 22 ft-lb)

3. Adjust No. 2 to No. 4 cylinder injection timing.
(1) Set No. 1 cylinder to injection start timing position, and set angle scale on tester flywheel at "0°".
(2) Turn tester flywheel to the angle shown below, and make sure that fuel flow from test nozzle stops.
If pre-stroke (injection timing) is incorrect, adjust the timing by following step 2.

SD 4-cylinder

Cylinder No.	1	3	4	2
Injection starting angle	0	89°30' - 90°30'	179°30' - 180°30'	269°30' - 270°30'

SD33

Cylinder No.	1	4	2	6	3	5
Injection Starting angle	0	59°30' ~ 60°30'	119°30' ~ 120°30'	179°30' ~ 180°30'	239°30' ~ 240°30'	299°30' ~ 300°30'

4. Check tappet clearance.
(1) Set camshaft **to T.D.C.** with setting tool on tappet and then set gauge scale at "0".
(2) Lift the tappet with a screwdriver and measure tappet top clearance (stroke until the plunger contacts the end of the plunger barrel).

Tappet clearance:
More than
0.30 mm (0.0118 in)

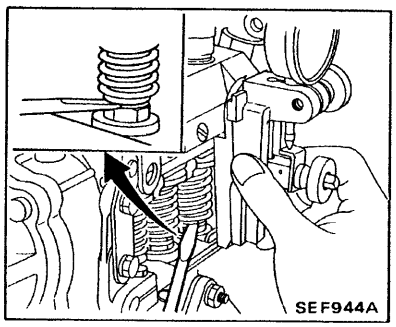

(3) If specified tappet clearance is not obtained, recheck and adjust pre-stroke.

Adjusting injection volume

1. Remove control rack guide screw and install lock screw to fix control rack on pump housing.

CAUTION:
Tighten lock screw by hand.

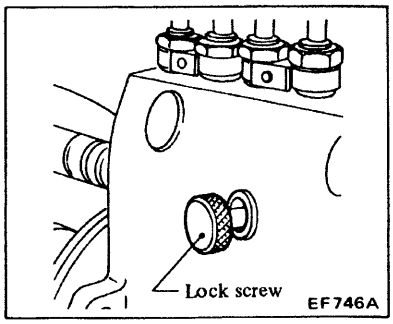

2. Set Tool DK05782601 to control rack.
(1) When setting tool, push control rack fully toward governor side, and align the "0" on measuring device scale.

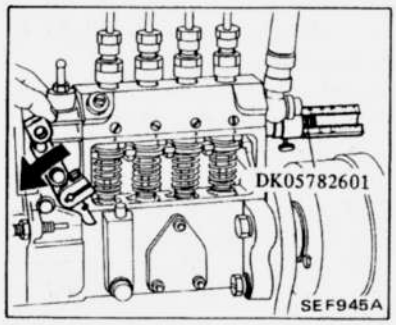

(2) Take off diaphragm housing together with governor spring. Otherwise, "0" position may not be obtained.
(3) Pull down full control lever toward fuel increasing side, and check the stroke of control rack.

Control rack stroke:
Refer to S.D.S.

3. Set fuel feed pressure.

Fuel feed pressure:
147 - 157 kPa (1.47 - 1.57 bar, 1.5 - 1.6 kg/cm^2, 21 - 23 psi)

4.
(1) Measure injection volume for each cylinder at rated pump speed and control rack position.

Injection volume:
Refer to S.D.S.

(2) Compute allowable unbalance of fuel injection volume.

Allowable unbalance =

$$\frac{\left(\text{Max. or min. injection volume for each plunger}\right) - \left(\text{Main injection volume}\right)}{\text{Mean injection volume}} \times 100$$

Allowable unbalance:
Refer to S.D.S.

5. Adjust injection volume so that specified injection volume and allowable unbalance is obtained.

(1) Loosen control pinion clamp screw.

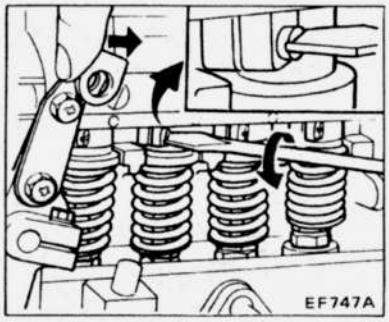

(2) Place suitable tool into hole in control sleeve and adjust by rotating control sleeve.

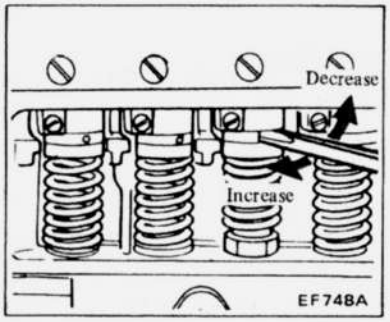

(3) After adjustment is completed, tightly secure pinion set screw.
(4) Remove lock screw from control rack and reinstall guide screw.

6. Install diaphragm housing and governor spring.

GOVERNOR

Adjustment

a. **When making a governor performance test, maintain the pump speed at 500 rpm.**
b. **Gradually step up negative pressure when adjusting.**
c. **Test and adjust injection timing and injection volume before testing governor.**
d. **Testing and adjusting procedures for the MZ governor and RBD-MZ governor are carried out in the similar manner. For the RBD-MZ governor, high-speed adjustment should additionally be made on the mechanical unit.**

Preparation

1. Remove control rack guide screw and install lock screw to fix control rack on pump housing.

CAUTION:
Tighten lock screw by hand.

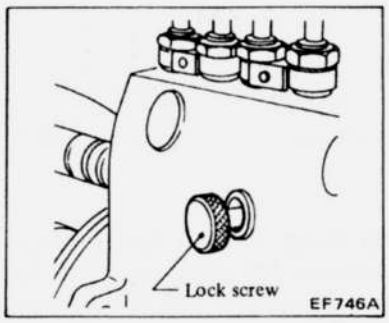

2. Set Tool DK05782601 to control rack.
(1) When setting tool, push control rack fully toward governor side, and align the "0" on measuring device scale.

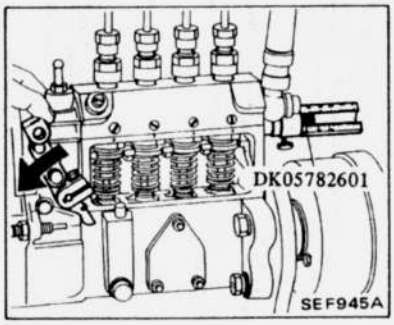

(2) Pull down full control lever toward fuel increasing side, and check the stroke of control rack.

Control rack stroke:
More than 18.0 mm (0.709 in)

3. Connect a hose between vacuum pump of tester and governor negative pressure chamber.

Air-tight test

1. Apply a negative pressure of 4.904 kPa (49.04 mbar, 500 mmH_2O, 19.69 inH_2O) to governor with rack set at position R1.

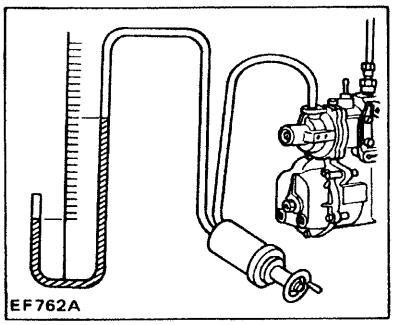

2. Make sure that negative pressure will not drop below the specified value within 10 seconds.

Negative pressure:
4.904 - 4.707 kPa (49.04 - 47.07 mbar, 500 - 480 mmH_2O, 19.69 - 18.90 inH_2O)/ more than 10 seconds

If it drops in less than 10 seconds, check the diaphragm and replace if necessary.

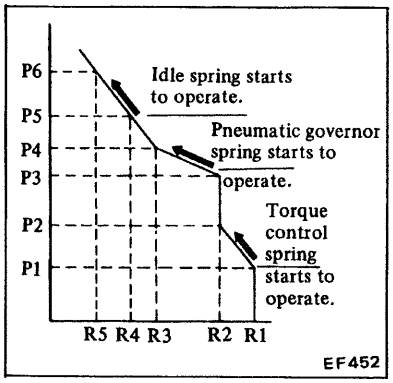

Smoke setscrew adjustment

With no negative pressure applied, adjust the smoke setscrew so that the rack is set at position R1.

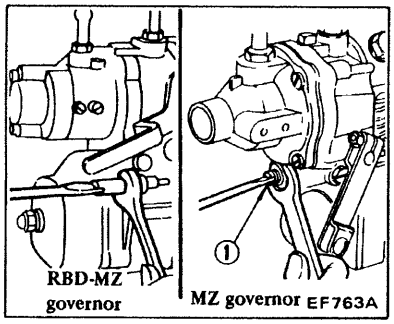

Torque mechanism adjustment

1. Check that torque control spring starts to actuate at negative pressure P_1 and stops at P_2. In other words, torque control travel is $R_1 - R_2$.

Torque control travel:
Refer to S.D.S.

2. If torque mechanism adjustment is not within the specifications:
(1) Remove diaphragm.
(2) Add or remove shim(s) (two types) as required until correct torque mechanism adjustment is made.

After installing diaphragm, make an air-tight test again.

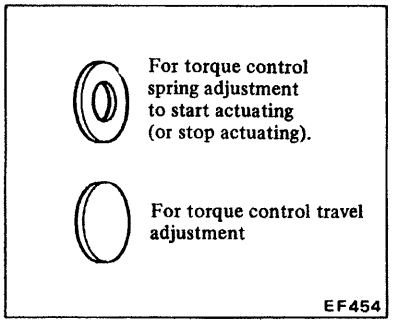

High-speed adjustment (Pneumatic governor section)

1. Increase negative pressure. Adjust governor shim until there is a balanced condition between **rack position R2 and negative pressure P3.**

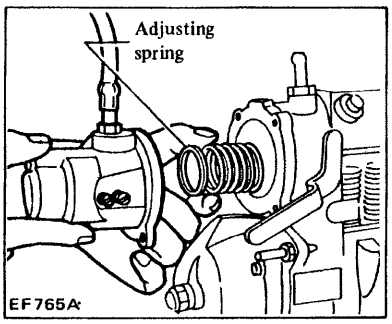

2. Gradually increase negative pressure. Make sure that **negative pressure is P5 when rack is moved to position R4.**

Idle adjustment

1. With negative pressure kept at P4, turn idle spring screw in with Tool until rack is set at position R3.

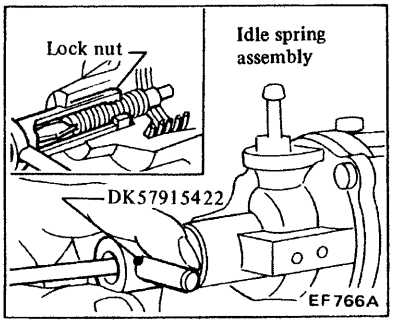

2. Tighten lock nut.
3. Further increase negative pressure. Make sure that negative pressure is P6 when rack is set at position R5.

If necessary, replace idle spring as an assembly.

4. Install plate plug.

High-speed adjustment (Mechanical governor section): Only RBD-MZ governor

1. With negative pressure kept in condition P3, increase pump speed.

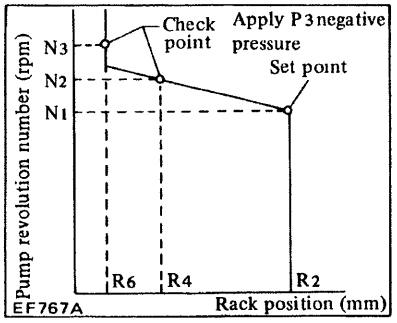

2. Adjust adjusting bolt of governor spring so that pump speed is N_1 when rack starts to be pulled from R_2.

If above adjustment cannot be made properly by means of adjusting bolt, add or remove mechanical governor spring shim(s).

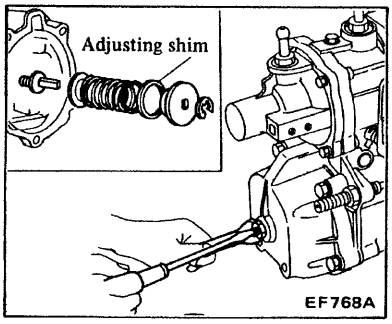

3. Increase pump speed, and make sure that pump speed is N_2 when rack is set at point R_4.

If pump speed is within specified range, replace mechanical governor spring and readjust.

4. Further increase pump speed, and make sure that rack is set at point R_6 when pump speed is N_3.

a. If rack is not properly set at position R_6, check for wear on part(s) between flyweight and push rod and for proper assembly of pump housing.
b. If necessary, replace push rod.

FEED PUMP

After installing feed pump, bleed air from system.

TEST

Standard fuel feed volume

The volume of fuel displaced by the feed pump is more than 300 mℓ (10.6 Imp fl oz) for each 15 seconds at 1,000 rpm.

The discharge pressure is more than 157 kPa (1.57 bar, 1.6 kg/cm^2, 23 psi) per 30 seconds at 600 rpm.

Pump performance test

1. Connect a pipe to intake side of feed pump, and set pump so that fuel can be sucked up from fuel level 1.0 m (3.3 ft) below the pump.
2. Operate priming pump at 80 strokes per minute, and make sure that **fuel can be sucked up within 1 minute.**

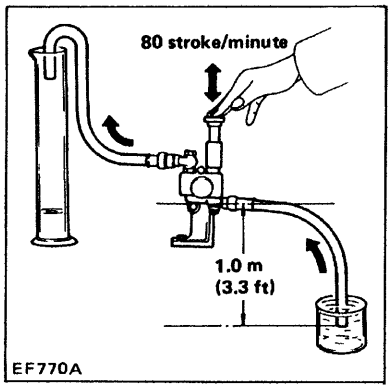

Air-tightness test

1. Stop up fuel feed pump discharge port and apply 147 to 196 kPa (1.47 to 1.96 bar, 1.5 to 2.0 kg/cm^2, 21 to 28 psi) of air pressure to intake side of pump.
2. Immerse pump in kerosene (light oil) and make sure that no air leaks from any of pump connections. If bubbles larger than one grain come from fuel feed pump housing or push rod joint continuously, replace oil seal at push rod or push rod.

Replace feed pump assembly, if necessary.

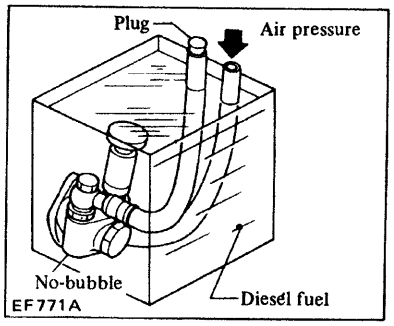

INSPECTION

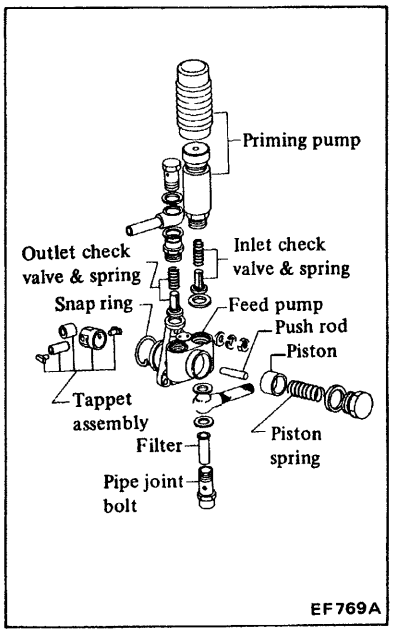

Feed pump housing

1. Check check valve seats. If they are damaged or excessively worn, replace housing.
2. Check push rod hole. If hole is excessively worn, replace housing.

Check valve and check valve spring

1. If seat of check valve is excessively worn or scarred, replace check valve with a new one.
2. If check valve spring is damaged or permanently stressed, replace valve spring.

Piston and piston spring

1. If periphery of piston is excessively worn or scarred, replace piston with a new one.
2. If piston spring is damaged or weakened, replace valve spring.

Tappet assembly

1. Tappet
   If periphery of tappet is worn or scarred, replace it with a new one.
2. Tappet roller
   If periphery of tappet roller is excessively worn or scarred, replace it with a new one.

Roller to pin clearance:
Limit
0.30 mm (0.0118 in)
Tappet roller outside diameter:
Wear limit
14.9 mm (0.587 in)

TIMER

REMOVAL

1. Remove timing gear cover.

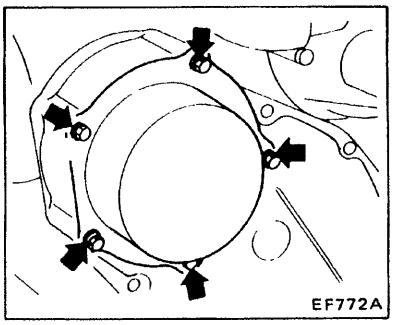

2. Remove timer round nut.

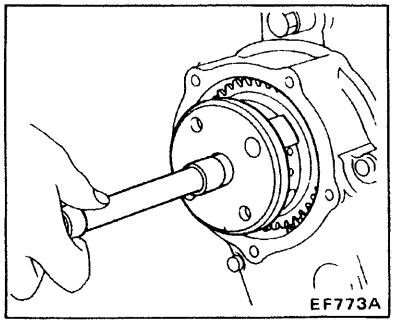

3. Remove timer assembly by threading in Tool.

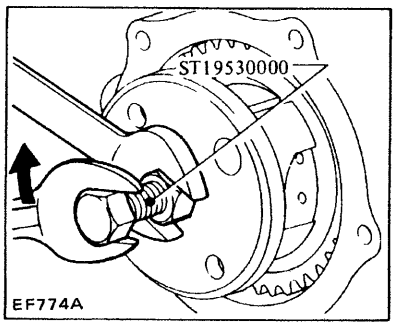

INSTALLATION

1. Align crank pulley and front cover marks so that No. 1 piston is at top dead center.

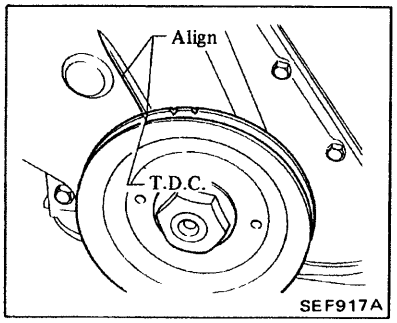

2. Mesh injection pump drive gear with idler gear **at Y-mark**, and then align gear to key way of injection pump camshaft **while turning crank pulley.**

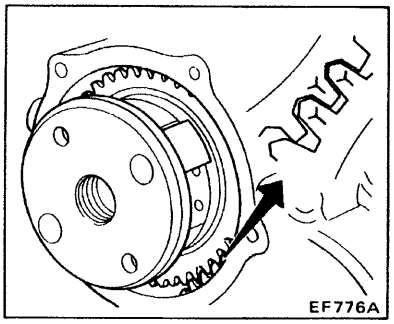

3. Secure timer assembly with lock washer and round nut.

Ⓣ : Round nut:
59 - 69 N·m
(6 - 7 kg-m, 43 - 51 ft-lb)

4. Install timing gear cover with new gasket sealed.

ADJUSTMENT

1. Install stroboscope, using cover plate bolts, so that synchronizer lever attachment is applied to tappet.
2. Operate fuel injection pump, turn "ON" switch of stroboscope illuminating dial (angle scale) on flywheel, and measure angular change based on variations in pump speed.
   If tester does not have a dial (angle scale):
   (1) Attach a dial to timer coupling and mount a pointer on tester drive shaft.
   (2) Operate fuel injection pump and turn stroboscope "ON" so as to illuminate dial.

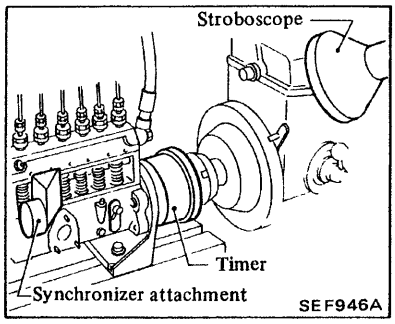

3. If advance angle is not within specified range, adjust by changing timer spring shims.

a. When injection timing is retarded, decrease shim thickness.
b. When injection timing is advanced, increase shim thickness.

Timer advance curve:
Refer to S.D.S.

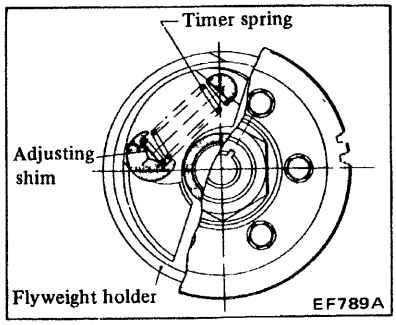

DISASSEMBLY

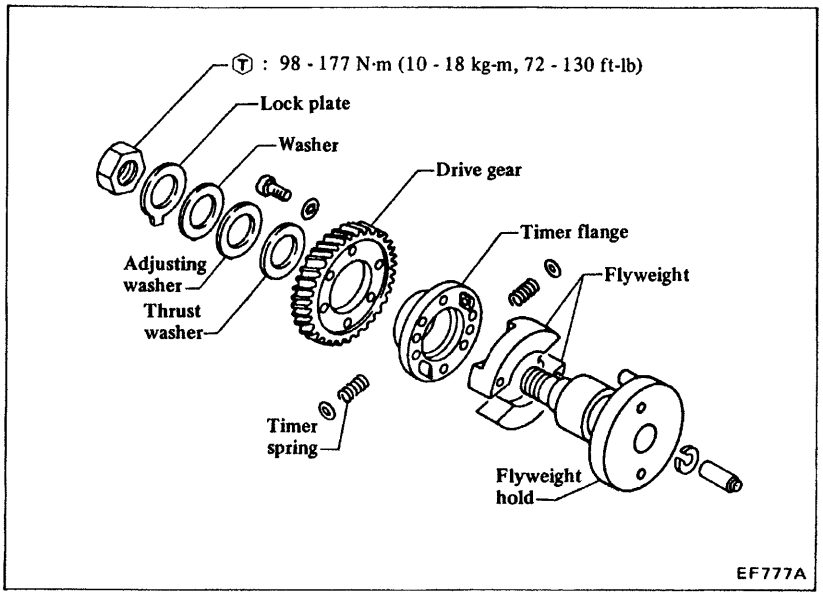

1. Place timer assembly on Tools with flyweight holder hole positioned on base pin.
2. Remove injection pump drive gear.

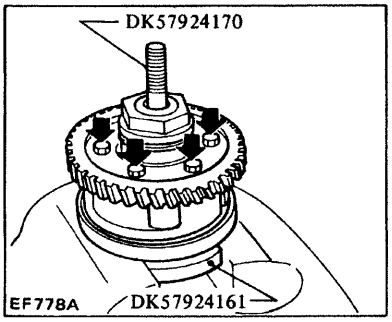

3. Remove nut, lock washer, lock plate, adjusting shim and thrust washer after unbending lock washer.

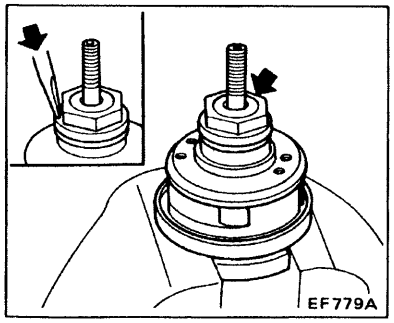

4. Remove timer flange by prying with lever while pressing spring with Tool DK57916432.

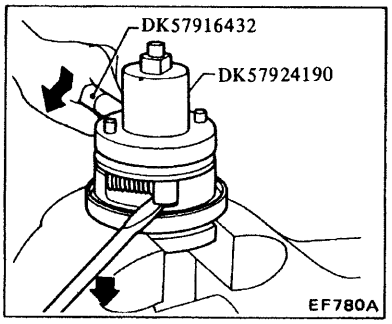

5. Remove timer spring, adjusting shim and flyweight.

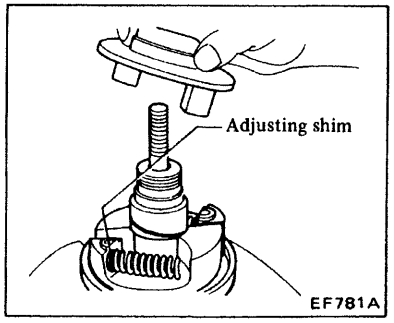

INSPECTION

Check all parts for wear or damage.

ASSEMBLY

1. Set flyweight holder on Tools with flyweight holder pin hole positioned on base pin.

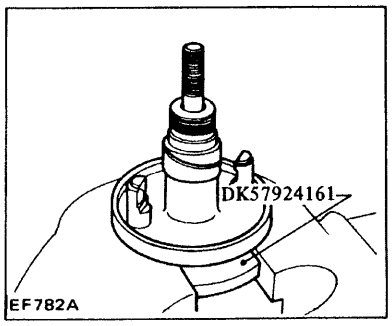

2. Apply grease to flyweight holder pin and flyweight holder hole.
3. Install flyweight and insert Tool under timer spring, positioning spring on flyweight.

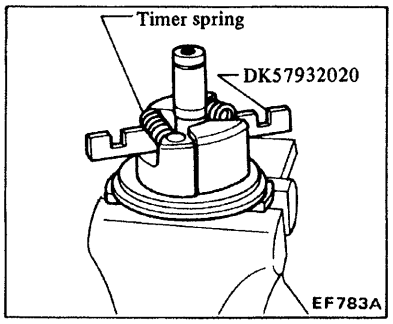

4. Insert suitable adjusting shim into hole at pin part of timer flange.
5. Cover timer flange to flyweight holder **by matching notch of flange and key groove of flyweight holder.**

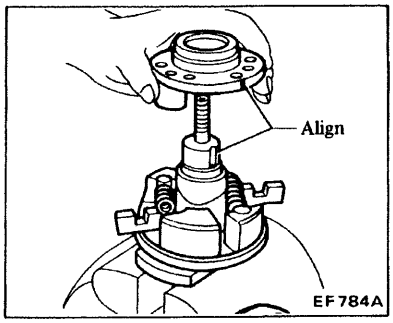

6.
(1) Turn Tool DK57916432 in direction to compress timer spring, thread in Tool DK57924190, and then remove Tool DK57932020.

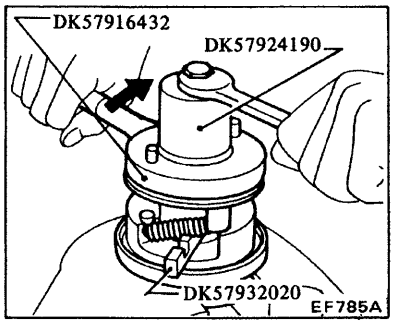

(2) Using a lever, insert timer spring into flange hole, thread in Tool DK57924190 all the way and install flange in its proper position.

Make sure that spring is fully seated in holes in flange and flyweight holder.

7. Adjust flyweight holder and flange clearance.
(1) Install thrust washer, lock plate and adjusting shims, and completely tighten them with nut.

Ⓣ : Nut
98 - 177 N·m
(10 - 18 kg-m,
72 - 130 ft-lb)
Lock plate and thrust washer clearance:
0.02 - 0.10 mm
(0.0008 - 0.0039 in)

(2) Measure lock plate and thrust washer clearance. If the clearance is not within specifications, adjust with adjusting shim.

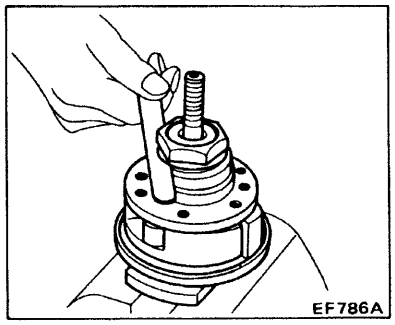

8. Align "O" mark on drive gear with notch in timer flange, and install drive gear.

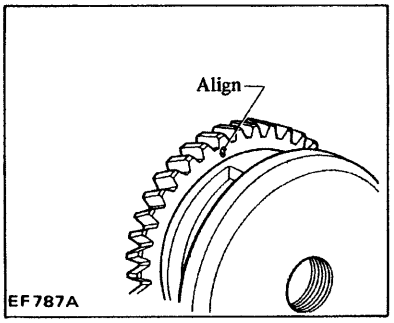

FUEL FILTER

Bleed air from fuel system after installing fuel filter.

TEST

Overflow valve

Attach a pressure gauge to fuel filter discharge port, and check valve opening pressure by operating priming pump. If pressure is not within range of 147 to 157 kPa (1.47 to 1.57 bar, 1.5 to 1.6 kg/cm^2, 21 to 23 psi), replace overflow valve.

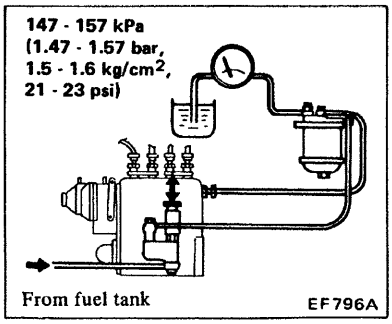

INSPECTION

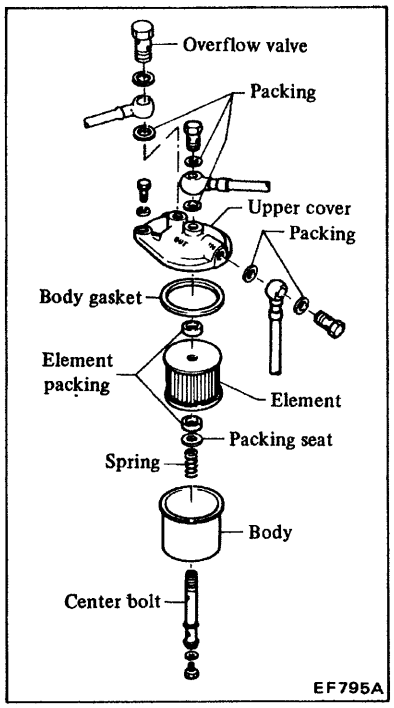

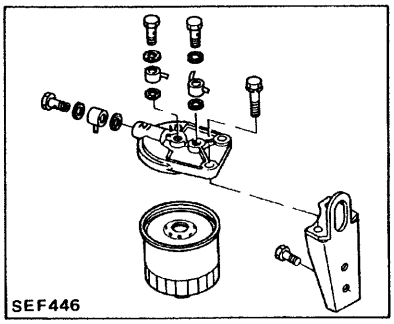

Element

Check element for clogging, damage, or peeling. If faulty, replace with a new filter element.

Body and upper covers

Inspect body for cracks or damage and examine covers for splits or damage. Replace faulty components with new ones.

SERVICE DATA AND SPECIFICATIONS

TABLE OF MODELS AND CORRESPONDING PUMP NUMBERS

Model	Engine	Part number	Pump number
430	SD22	16700-V0607 16700-V1301 16700-Y8403 16700-Y8404 16700-Y8408	101433-9370 101433-9431 101431-9900 101431-9910 101433-9060
160	SD33	16700-C6304 16700-C6807 16700-C6808 16700-C6809 16700-C6811	101631-9562 101631-9551 101631-9571 101631-9600 101631-9660
H40	SD25	16700-T8263	101441-9040
W40	SD25	16700-T8264	101441-9050
140	SD22	16700-J0200 16700-J0201 16700-J0202 16700-J0203 16700-J0500 16700-J5301 16700-Y1402	101431-9430 101431-9590 101431-9880 101431-9980 101433-9070 101431-9710 101431-9770
F22	SD25	16700-T8263	101441-9040
720	SD22	16700-31W02 16700-33W00 16700-34W00 16700-34W02	101433-9230 101433-9260 101433-9401 101433-9421
	SD23	16700-09W60 16700-09W61	101441-9130 101441-9170
	SD25	16700-54W60 16700-54W61	101441-9120 101441-9160

INSPECTION AND ADJUSTMENT

Injection pump

		Standard mm (in)	Limit mm (in)
Pump housing to tappet clearance	SD 4-cylinder	0.02 - 0.062 (0.0008 - 0.0024)	0.20 (0.0079)
	SD33	0.02 - 0.062 (0.0008 - 0.0024)	0.20 (0.0079)
Tappet adjusting bolt head recess		–	0.20 (0.0079)
Control sleeve to plunger trunnion shaft clearance		0.02 - 0.08 (0.0008 - 0.0031)	0.12 (0.0047)
Camshaft end play	SD 4-cylinder	0 - 0.02 (0 - 0.0008)	0.10 (0.0039)
	SD33	0 - 0.03 (0 - 0.0012)	
Control rack to pinion backlash		0.15 (0.0059)	0.30 (0.0118)
Control rack sliding resistance	Pump rpm = 0	Less than 1.471N (150 g, 5.29 oz)	–
	Pump rpm = 1,000	Less than 0.490N (50 g, 1.76 oz)	–
Injection internal (cam angle)	SD 4-cylinder	89°30′ - 90°30′	–
	SD33	59°30′ - 60°30′	
Injection starting timing (pre-stroke: plunger lift from B.D.C.)		2.25 - 2.35 (0.0886 - 0.0925)	–
Tappet clearance at cam T.D.C.		More than 0.30 (0.0118)	–
Camshaft end play adjusting shim		Thickness mm (in)	Parts number
		0.10 (0.0039)	16741 37500
		0.12 (0.0047)	16741 37501
		0.14 (0.0055)	16741 37502
		0.16 (0.0063)	16741 37503
		0.18 (0.0071)	16741 37504
		0.30 (0.0118)	16741 37505
		0.50 (0.0197)	16741 37506

Governor

	Thickness mm (in)	Parts number
Pneumatic governor spring adjusting shim	0.2 (0.008)	19241 37504
	0.3 (0.012)	19241 37505
	0.5 (0.020)	19241 37500
	1.0 (0.039)	19241 37501
	1.5 (0.059)	19241 37502
	2.0 (0.079)	19241 37503
Torque control travel adjusting shim	0.1 (0.004)	19227 37500
	0.2 (0.008)	19227 37501
	0.3 (0.012)	19227 37502
	0.5 (0.020)	19227 37503
	1.0 (0.039)	19227 37504
Torque control spring adjusting shim	0.1 (0.004)	19229 37500
	0.2 (0.008)	19229 37501
	0.3 (0.012)	19229 37502
	0.5 (0.020)	19229 37503
	1.0 (0.039)	19229 37504

Timer

Flyweight holder to flange clearance (Lock plate to thrust washer clearance) mm (in)	0.02 - 0.10 (0.0008 - 0.0039)	
	Thickness mm (in)	Part number
Timer spring adjusting shim	0.1 (0.004)	16822 37500
	0.3 (0.012)	16822 37501
	0.5 (0.020)	16822 37502
Timer plate bearing adjusting shim	0.10 (0.0039)	16826 99007
	0.12 (0.0047)	16826 99000
	0.14 (0.0055)	16826 99001
	0.16 (0.0063)	16826 99002
	0.18 (0.0071)	16826 99003
	0.20 (0.0079)	16826 99005
	0.30 (0.0118)	16826 99006
	0.50 (0.0197)	16826 99004

Feed pump

	Standard mm (in)	Wear limit mm (in)
Roller to pin clearance	0.04 - 0.08 (0.0016 - 0.0031)	0.30 (0.0118)
Roller outer diameter	15.0 (0.591)	14.9 (0.587)
Oil feed rate	300 mℓ (10.6 Imp fl-oz) or more within 15 seconds at a pump speed of 1,000 rpm.	
Pumping capacity	Discharge should occur within one minute (60 seconds) with a pump speed of 100 rpm and intake head of 1.0 meter (3.3 ft).	
Oil feed pressure	The time required to develop an oil feed pressure of 157 kPa (1.57 bar, 1.6 kg/cm^2, 23 psi) with a feed pump speed of 600 rpm should be within 30 seconds.	
Pumping capacity (priming pump)	Operate the priming pump at a rate of 60 to 100 strokes per minute and verify that pumping is started within 30 strokes.	

Fuel filter

Type	Full-flow, paper type filter
Overflow valve opening pressure kPa (bar, kg/cm^2, psi)	147 - 157 (1.47 - 1.57, 1.5 - 1.6, 21 - 23)

ADJUSTMENT VALUES FOR INJECTION PUMP TESTER

Fuel injection quantity

MZ (Pneumatic) governor

Pump Nos. 101431-9710, 101431-9880, 101431-9430

	Rack position mm (in)	Pump speed rpm	Stroke	Mean injection volume mℓ (Imp fl oz)	Allowable unbalance %	Pre-stroke mm (in)
Standard injection volume	15 (0.59)	800	1,000	36.3 - 38.3 (1.28 - 1.35)	±2.5	2.3 ±0.05 (0.091 ±0.0020)
	14 (0.55)	1,700		35.7 - 38.9 (1.26 - 1.37)	±4.0	
	10.8 (0.425)	300		6.4 - 8.6 (0.23 - 0.30)	±15.0	
				*6.5 - 8.9 (0.23 - 0.31)		
	9 (0.35)	1,700		6.2 - 7.8 (0.22 - 0.27)	±7.5	
Full load setting (No apply negative pressure)	0 kPa (0 mbar, 0 mmAq, 0 in Aq)	800		37.3±0.5 (1.31±0.02)	–	

*: Indicates values for pump No. 101431-9430.

RBD-MZ (Pneumatic-mechanical) governor

Pump Nos. 101433-9230, 101433-9370

	Rack position mm (in)	Pump speed rpm	Stroke	Mean injection volume mℓ (Imp fl oz)	Allowable unbalance %	Pre-stroke mm (in)
Standard injection volume	12 (0.47)	800	1,000	36 - 38 (1.27 - 1.34)	±2.5	2.3 ±0.05 (0.091 ±0.0020)
	11 (0.43)	1,700		35.4 - 38.6 (1.25 - 1.36)	±4.0	
	7.7 (0.303)	300		6.4 - 8.6 (0.23 - 0.30)	±15	
	6 (0.24)	1,700		7.2 - 8.8 (0.25 - 0.31)	±7.5	
Full load setting (No apply negative pressure)	0 kPa (0 mbar, 0 mmAq, 0 inAq)	800		37±0.5 (1.30±0.02)	–	

Pump Nos. 101431-9590, 101431-9770, 101431-9910, 101431-9980

	Rack position mm (in)	Pump speed rpm	Stroke	Mean injection volume mℓ (Imp fl oz)	Allowable unbalance %	Pre-stroke mm (in)
Standard injection volume	12 (0.47)	800	1,000	36.3 - 38.3 (1.28 - 1.35)	±2.5	2.3 ±0.05 (0.091 ±0.0020)
	11 (0.43)	1,700		35.7 - 38.9 (1.26 - 1.37)	±4.0	
	About 7.7 (0.303)	300		6.4 - 8.6 (0.23 - 0.30)	±15	
	6 (0.24)	1,700		6.2 - 7.8 (0.22 - 0.27)	±7.5	
Full load setting (No apply negative pressure)	0 kPa (0 mbar, 0 mmAq, 0 inAq)	800		37.3±0.5 (1.31±0.02)	–	

INJECTION PUMP ASSEMBLY (Diesel Kiki-Bosch in-line type)

Pump Nos. 101433-9060, 101433-9070, 101433-9260

	Rack position mm (in)	Pump speed rpm	Stroke	Mean injection volume mℓ (Imp fl oz)	Allowable unbalance %	Pre-stroke mm (in)
Standard injection volume	11 (0.43)	1,000	1,000	30.7 - 32.7 (1.08 - 1.15)	±2.5	2.3 ±0.05 (0.091 ±0.0020)
	10 (0.39)	1,700		29.7 - 32.9 (1.05 - 1.16)	±4.0	
	7.7 (0.303)	300		6.4 - 8.6 (0.23 - 0.30)	±15	
	6 (0.24)	1,700		6.2 - 7.8 (0.22 - 0.27)	±7.5	
				7.2 - 8.8 (0.25 - 0.31)*		
Full load setting (No apply negative pressure)	0 kPa (0 mbar, 0 mmAq, 0 inAq)	1,000		31.7±0.5 (1.12±0.02)	–	

*: Indicates values for Pump No. 101433-9260.

Pump Nos. 101441-9040, 101441-9050

	Rack position mm (in)	Pump speed rpm	Stroke	Mean injection volume mℓ (Imp fl oz)	Allowable unbalance %	Pre-stroke mm (in)	Control rack stroke mm (in)
Standard injection volume	11.7 (0.461)	1,000	1,000	35.6 - 37.6 (1.25 - 1.32)	±2.5	2.15±0.05 (0.0846 ±0.0020)	14.4 - 14.7 (0 567 - 0.579)
	8.2 (0.323)	300		6.9 - 9.1 (0.24 - 0.32)	±15		
Full-load setting (No apply negative pressure)	0 kPa (0 mbar, 0 mmAq, 0 inAq)	1,000		36.6±0.5 (1.29±0.02)	–		

Pump Nos. 101631-9551, 101631-9571

	Rack position mm (in)	Pump speed rpm	Stroke	Mean injection volume mℓ (Imp fl oz)	Allowable unbalance %	Pre-stroke mm (in)
Standard injection volume	11.6 (0.457)	800	1,000	31.5 - 33.5 (1.11 - 1.18)	±2.5	2.15 ±0.05 (0.0846 ±0.0020)
	11.6 (0.457)	1,900		38.9 - 42.1 (1.37 - 1.48)	±4	
	About 8.1 (0.319)	300		6.4 - 8.6 (0.23 - 0.30)	±15	

Pump No. 101431-9900

	Rack position mm (in)	Pump speed rpm	Stroke	Mean injection volume mℓ (Imp fl oz)	Allowable unbalance %	Pre-stroke mm (in)
Standard injection volume	11.8 (0.465)	800	1,000	34.7 - 36.7 (1.22 - 1.29)	±2.5	2.3 ±0.05 (0.091 ±0.0020)
	10.8 (0.425)	1,700		34.1 - 37.3 (1.20 - 1.31)	±4	
	About 7.7 (0.303)	300		6.4 - 8.6 (0.23 - 0.30)	±15	
	6 (0.24)	1,700		6.2 - 7.8 (0.22 - 0.27)	±7.5	
Full load setting (No apply negative pressure)	0 kPa (0 mbar, 0 mmAq, 0 inAq)	800		35.7±0.5 (1.26±0.02)	–	

Pump Nos. 101631-9600, 101631-9660

	Rack position mm (in)	Pump speed rpm	Stroke	Mean injection volume mℓ (Imp fl oz)	Allowable unbalance %	Pre-stroke mm (in)
Standard injection volume	11.2 (0.441)	800	1,000	31.5 - 33.5 (1.11 - 1.18)	±2.5	2.15 ±0.05 (0.0846 ±0.0020)
	10.7 (0.421)	1,900		35.0 - 38.2 (1.23 - 1.34)	±4	
	About 7.5 (0.295)	300		6.5 - 8.5 (0.23 - 0.30)	±15	

Pump No. 101433-9421

	Rack position mm (in)	Pump speed rpm	Stroke	Mean injection volume mℓ (Imp fl oz)	Allowable unbalance %	Pre-stroke mm (in)
Standard injection volume	11.6 (0.457)	800	1,000	31.6 - 33.6 (1.11 - 1.18)	±2.5	2.3±0.05 (0.091±0.0020)
	About 7.9 (0.311)	300		6.4 - 8.6 (0.23 - 0.30)	±15	
Full load setting (No apply negative pressure)	0 kPa (0 mbar, 0 mmAq, 0 inAq)	800		32.6±0.5 (1.15±0.02)	–	

INJECTION PUMP ASSEMBLY (Diesel Kiki-Bosch in-line type)

Pump No. 101433-9431

	Rack position mm (in)	Pump speed rpm	Stroke	Mean injection volume mℓ (Imp fl oz)	Allowable unbalance %	Pre-stroke mm (in)
Standard injection volume	11.8 (0.465)	800	1,000	34.7 - 36.7 (1.22 - 1.29)	±2.5	2.3±0.05 (0.091±0.0020)
	About 7.7 (0.303)	300		6.4 - 8.6 (0.23 - 0.30)	±15	
Full load setting (No apply negative pressure)	0 kPa (0 mbar, 0 mmAq, 0 inAq)	800		35.7±0.5 (1.26±0.02)	–	

Pump Nos. 101441-9130, 101441-9170

	Rack position mm (in)	Pump speed rpm	Stroke	Mean injection volume mℓ (Imp fl oz)	Allowable unbalance %	Pre-stroke mm (in)
Standard injection volume	12 (0.47)	1,000	1,000	37.8 - 39.8 (1.33 - 1.40)	±2.5	2.15±0.05 (0.0846±0.0020)
	11.2 (0.441)	2,000		35.9 - 39.1 (1.26 - 1.38)	±4.0	
	About 8.2 (0.323)	300		6.9 - 9.1 (0.24 - 0.32)	±15	
Full load setting (No apply negative pressure)	0 kPa (0 mbar, 0 mmAq, 0 inAq)	1,000		38.8±0.5 (1.37±0.02)	–	

Pump No. 101631-9562

	Rack position mm (in)	Pump speed rpm	Stroke	Mean injection volume mℓ (Imp fl oz)	Allowable unbalance %	Pre-stroke mm (in)
Standard injection volume	10.7 (0.421)	800	1,000	28.6 - 30.6 (1.01 - 1.08)	±2.5	2.15±0.05 (0.0846±0.0020)
	About 7.5 (0.295)	300		6.5 - 8.5 (0.23 - 0.30)	±15	

INJECTION PUMP ASSEMBLY (Diesel Kiki-Bosch in-line type)

Pump No. 101433-9401

	Rack position mm (in)	Pump speed rpm	Stroke	Mean injection volume mℓ (Imp fl oz)	Allowable unbalance %	Pre-stroke mm (in)
Standard injection volume	12 (0.47)	800	1,000	35.7 - 37.7 (1.26 - 1.33)	±2.4	2.3±0.05 (0.091±0.0020)
	About 7.5 (0.295)	300		6.4 - 8.6 (0.23 - 0.30)	±15	
Full load setting (No apply negative pressure)	0 kPa (0 mbar, 0 mmAq, 0 inAq)	800		36.7±0.5 (1.29±0.02)	–	

Pump Nos. 101441-9120, 101441-9160

	Rack position mm (in)	Pump speed rpm	Stroke	Mean injection volume mℓ (Imp fl oz)	Allowable unbalance %	Pre-stroke mm (in)	Control rack stroke mm (in)
Standard injection volume	12.3 (0.484)	1,000	1,000	40 - 42 (1.41 - 1.48)	±2.5	2.15±0.05 (0.0846 ±0.0020)	14.4 - 14.7 (0.567 - 0.579)
	About 8.2 (0.323)	300		6.9 - 9.1 (0.24 - 0.32)	±15		
Full load setting (No apply negative pressure)	0 kPa (0 mbar, 0 mmAq, 0 inAq)	1,000		40.5 - 41.5 (1.43 - 1.46)	–		

Governor performance curve

Operate injection pump at 500 rpm, increase negative pressure gradually from lower one.

MZ (Pneumatic) governor

Pump Nos. 101431-9710, 101431-9880, 101431-9430

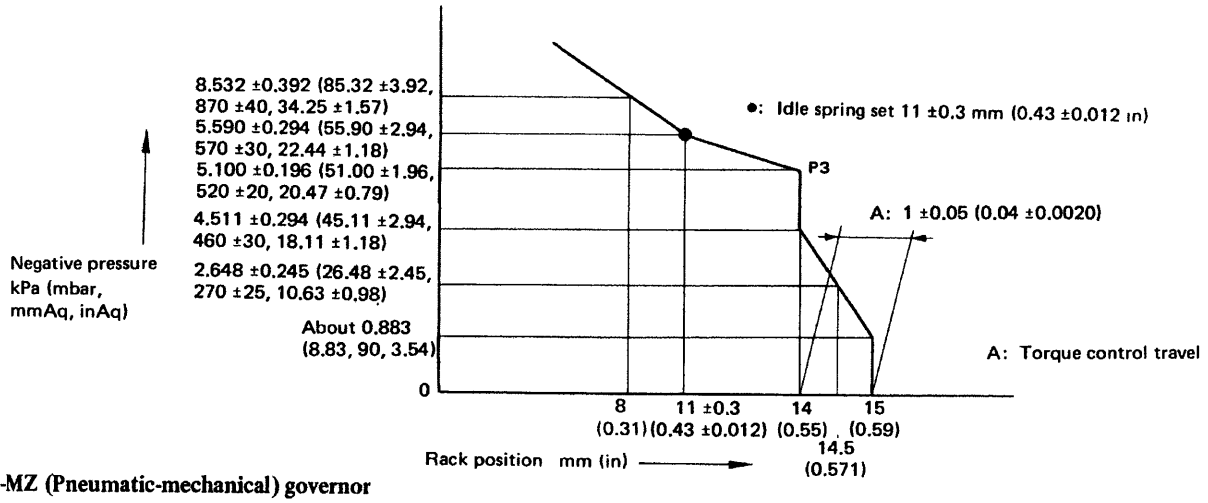

RBD-MZ (Pneumatic-mechanical) governor

Pump Nos. 101433-9230, 101433-9401

Pneumatic

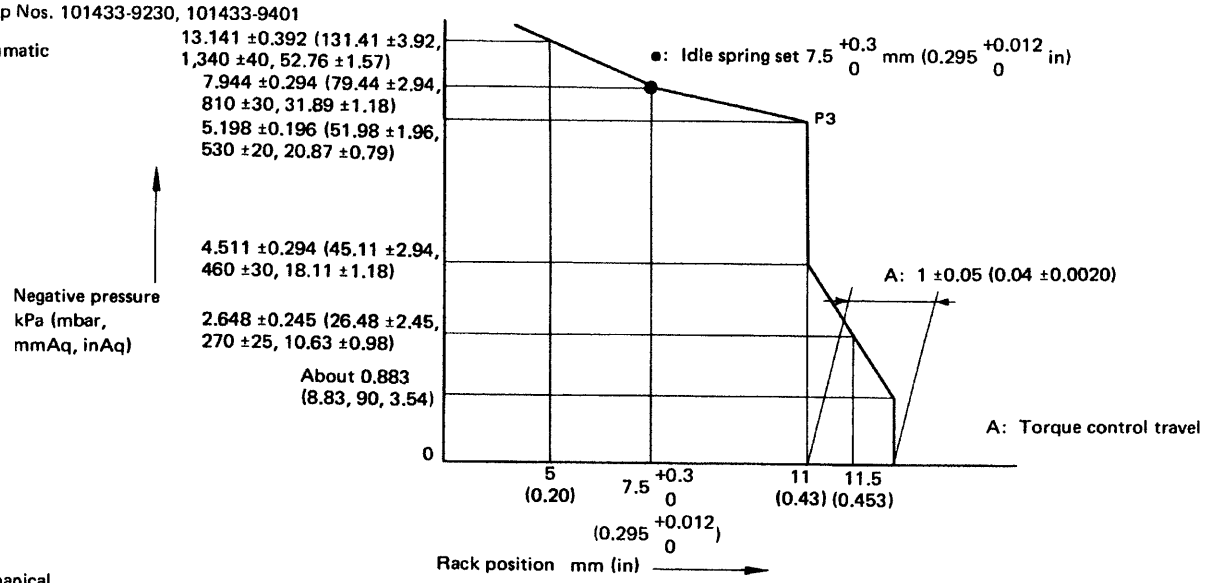

Mechanical

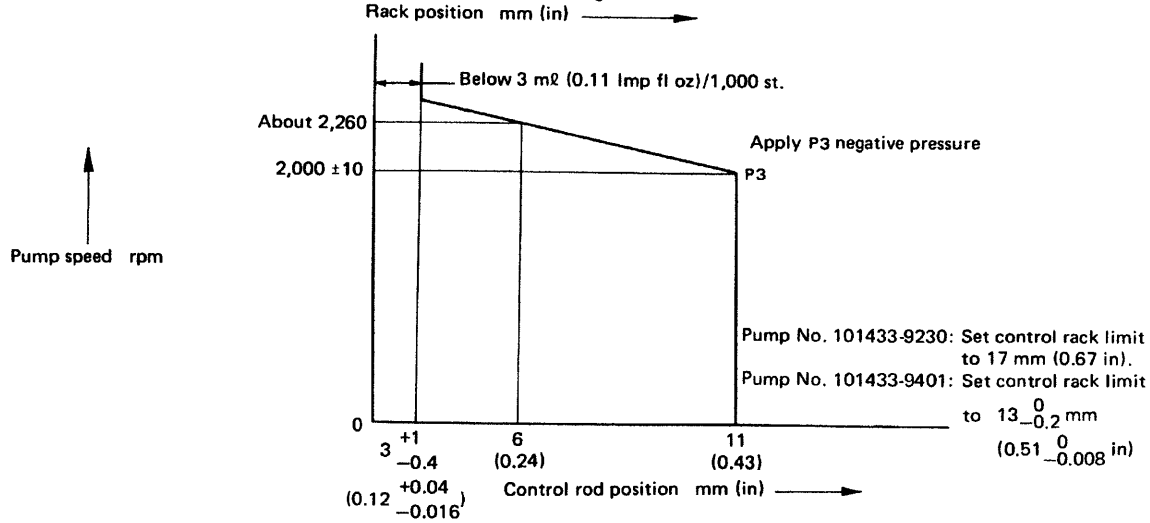

Pump Nos. 101431-9770, 101431-9980

Pneumatic

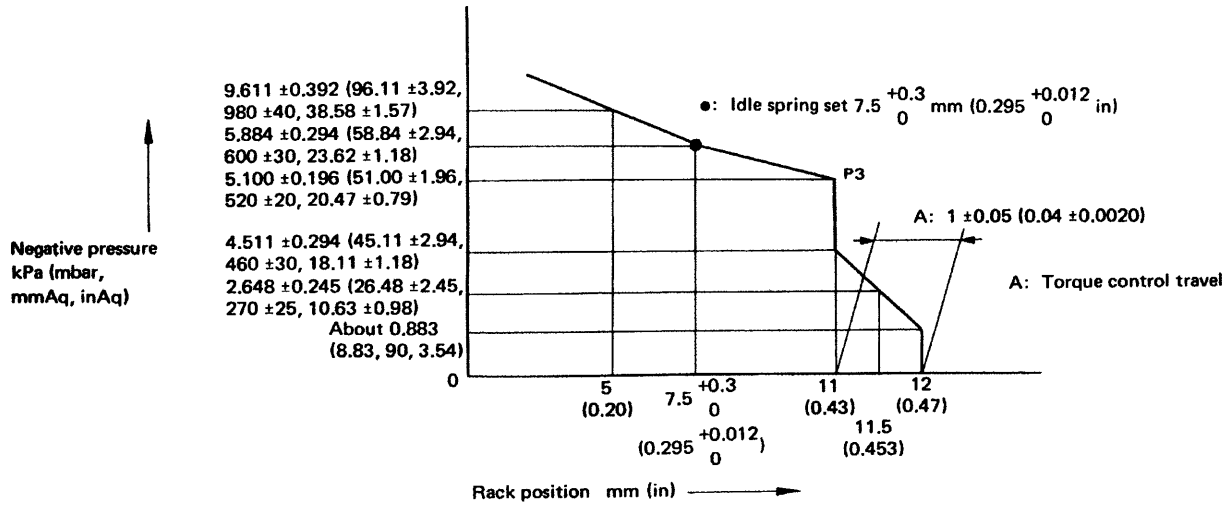

Mechanical

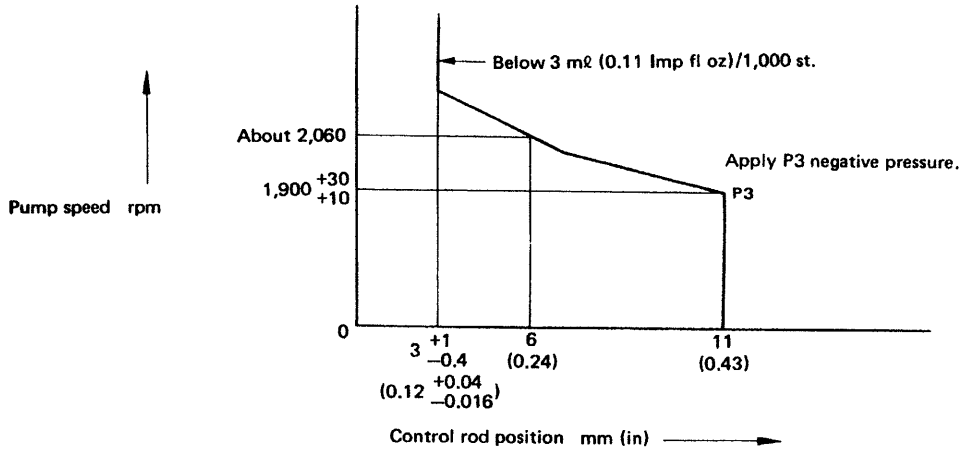

Pump No. 101431-9910

Pneumatic

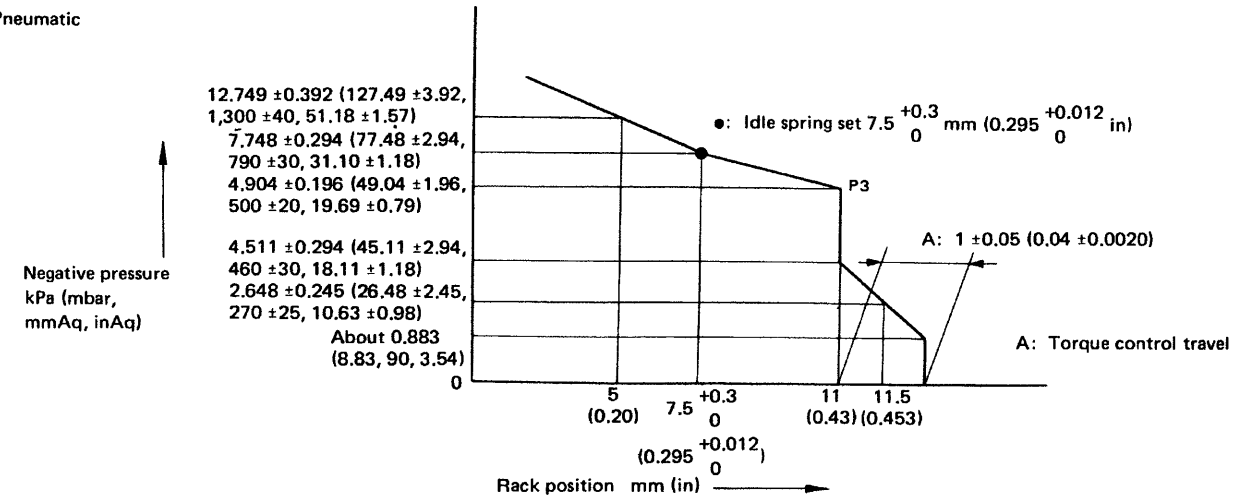

Mechanical

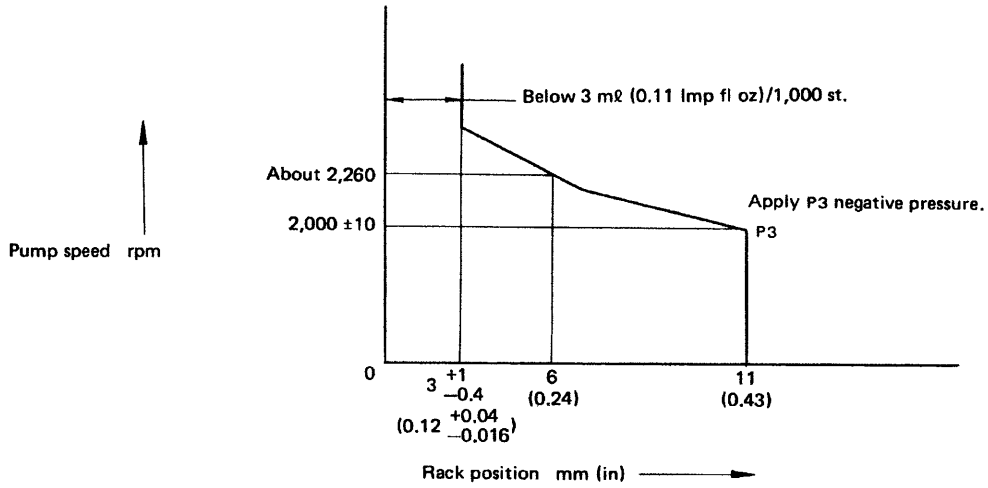

Pump Nos. 101433-9060, 101433-9260

Pneumatic

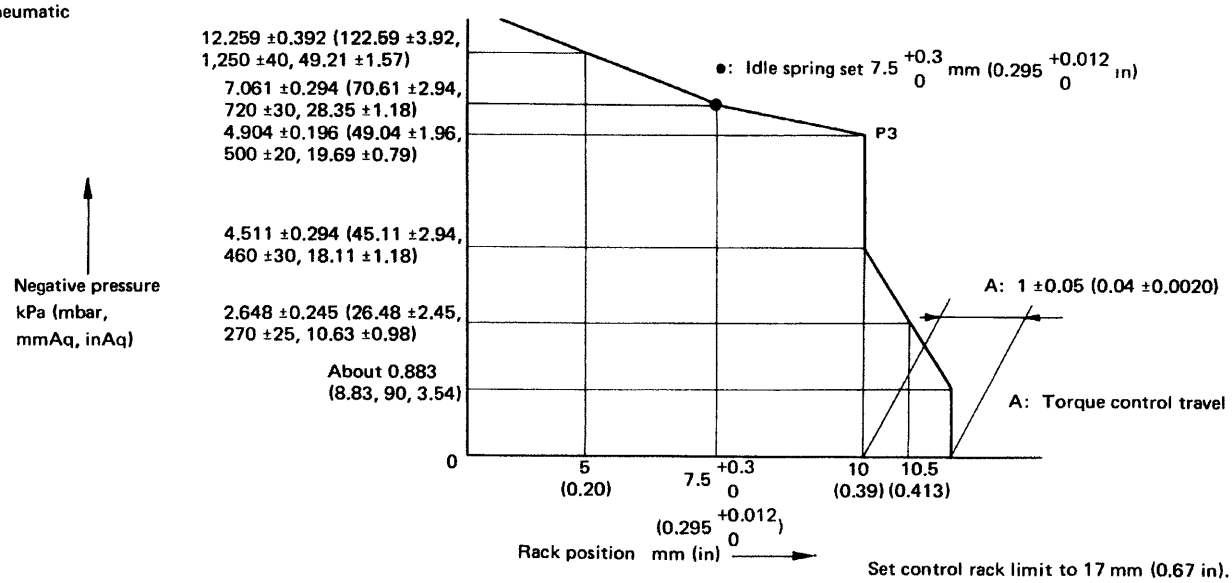

Set control rack limit to 17 mm (0.67 in).

Mechanical

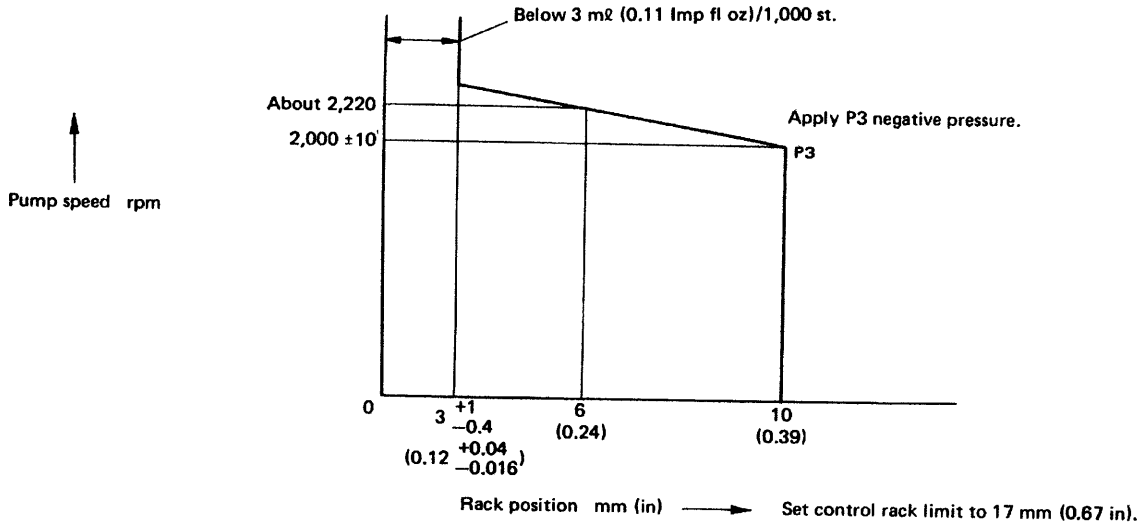

Pump No. 101433-9070

Pneumatic

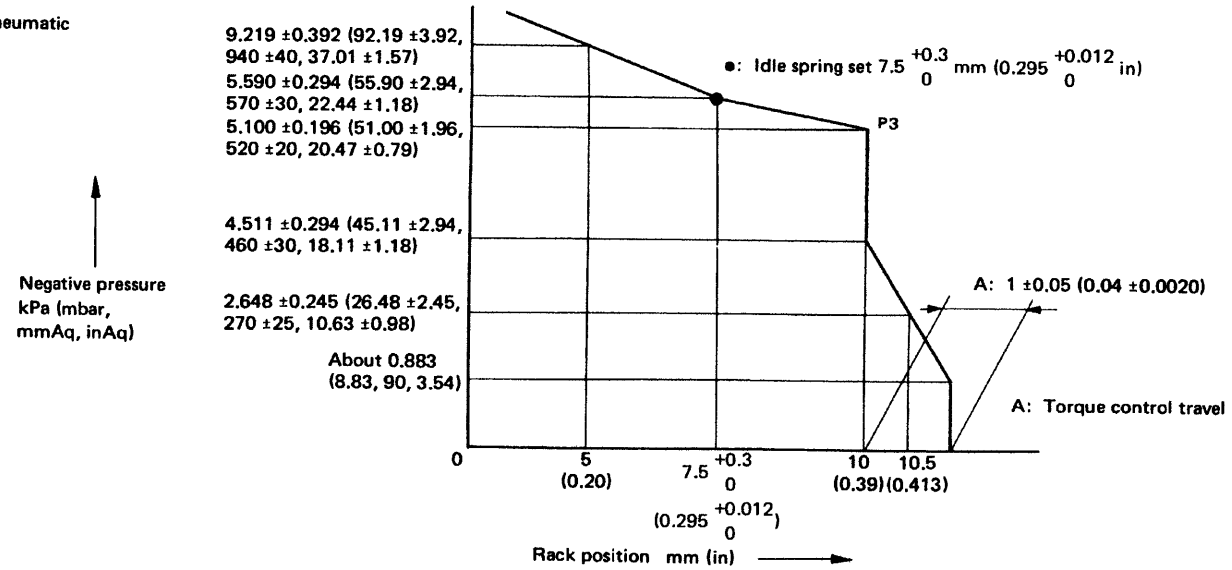

Mechanical

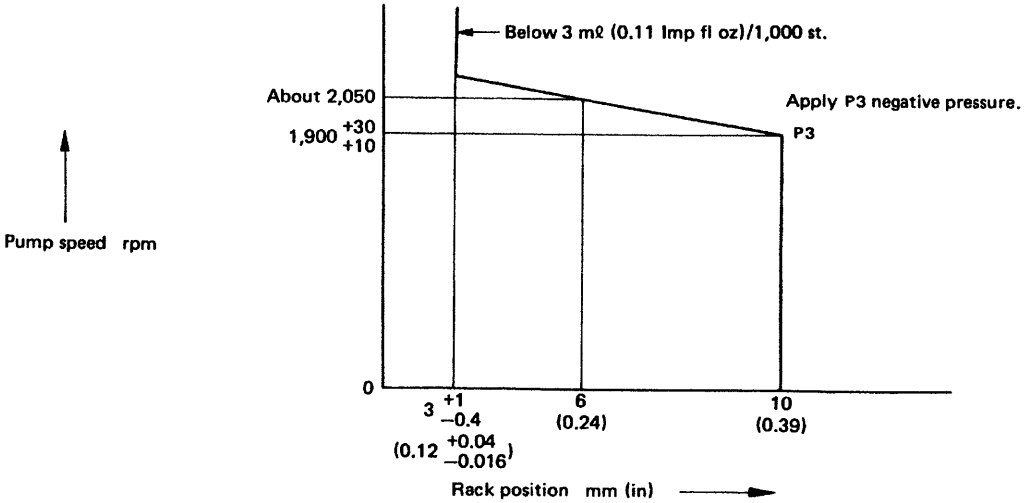

Pump Nos. 101631-9551, 101631-9571

Pneumatic

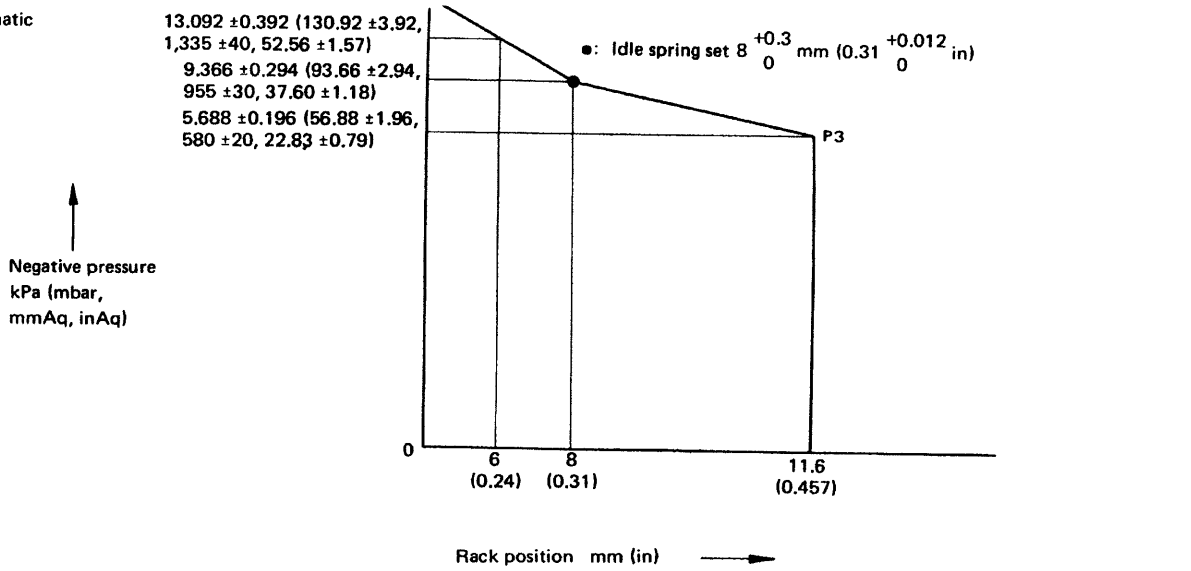

Mechanical

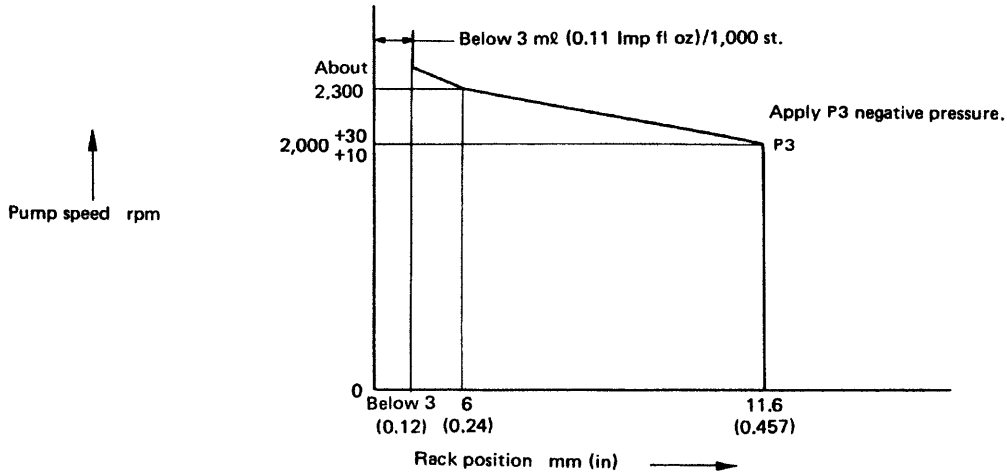

Pump Nos. 101431-9900, 101433-9431

Pneumatic

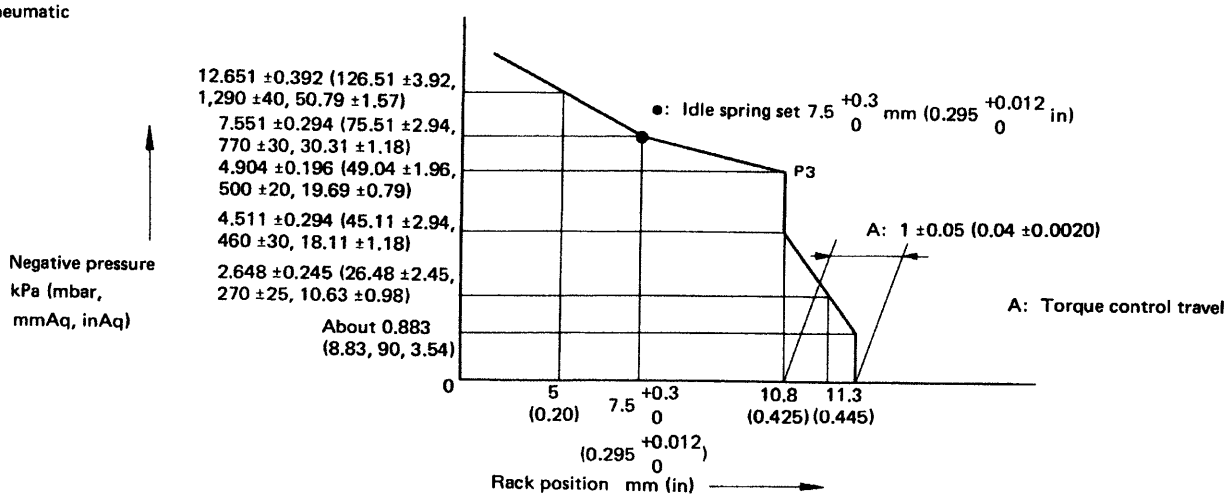

Mechanical

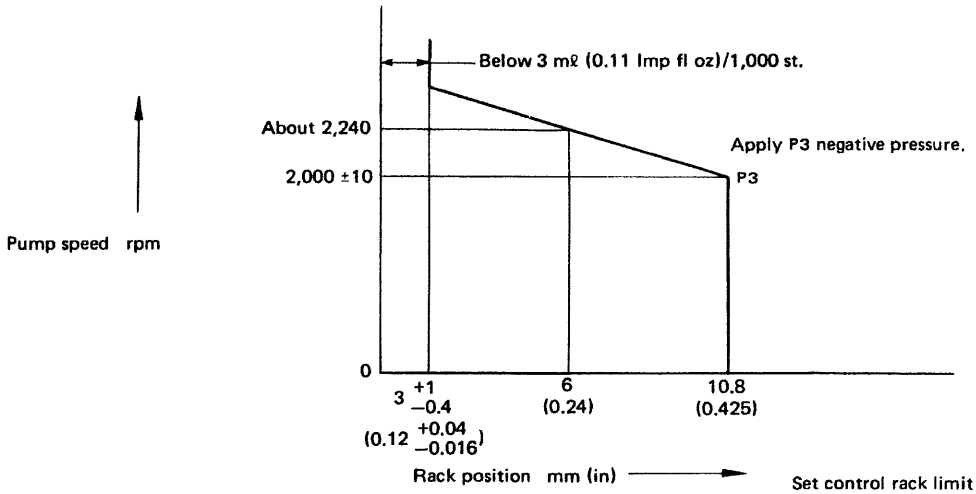

Set control rack limit to 17 mm (0.67 in).

Pump Nos. 101441-9040, 101441-9050

Pneumatic

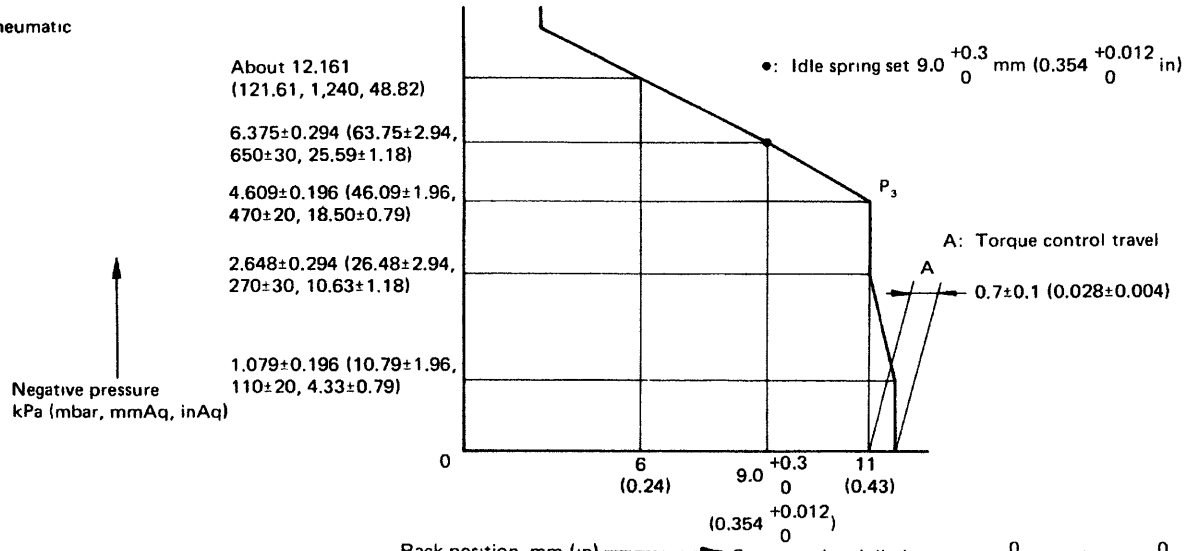

Set control rack limit to 14.7 0 −0.3 mm (0.579 0 −0.012 in)

Mechanical

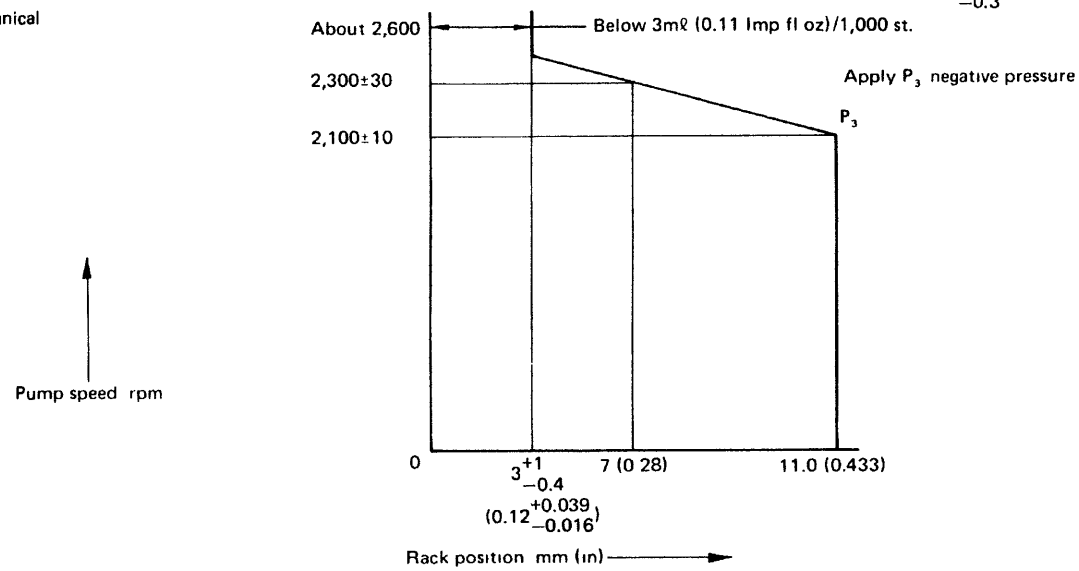

Pump Nos. 101631-9600, 101631-9660

Pneumatic

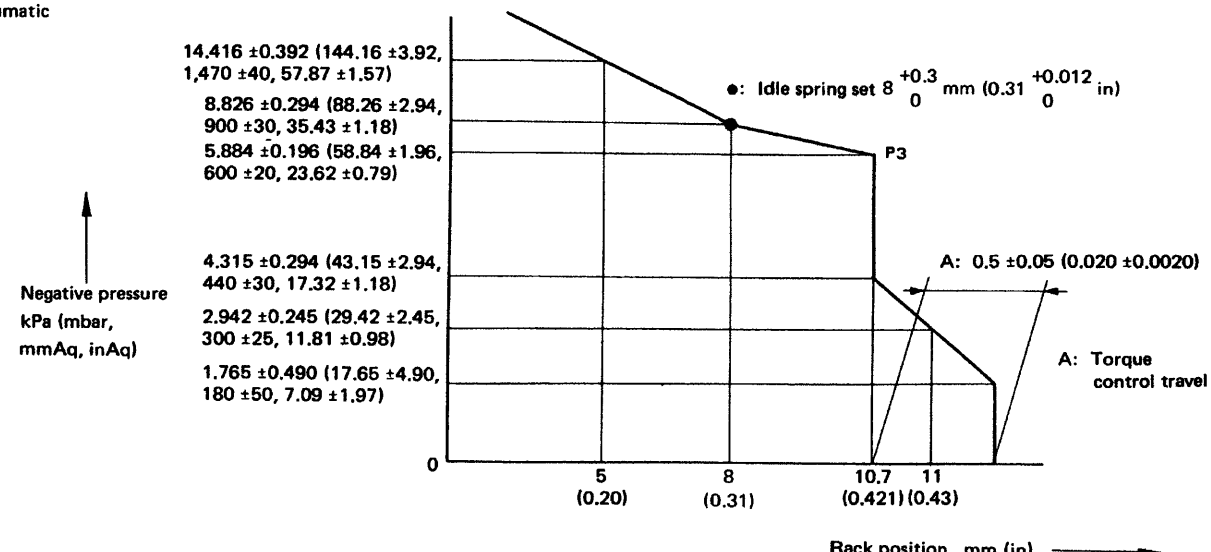

Mechanical

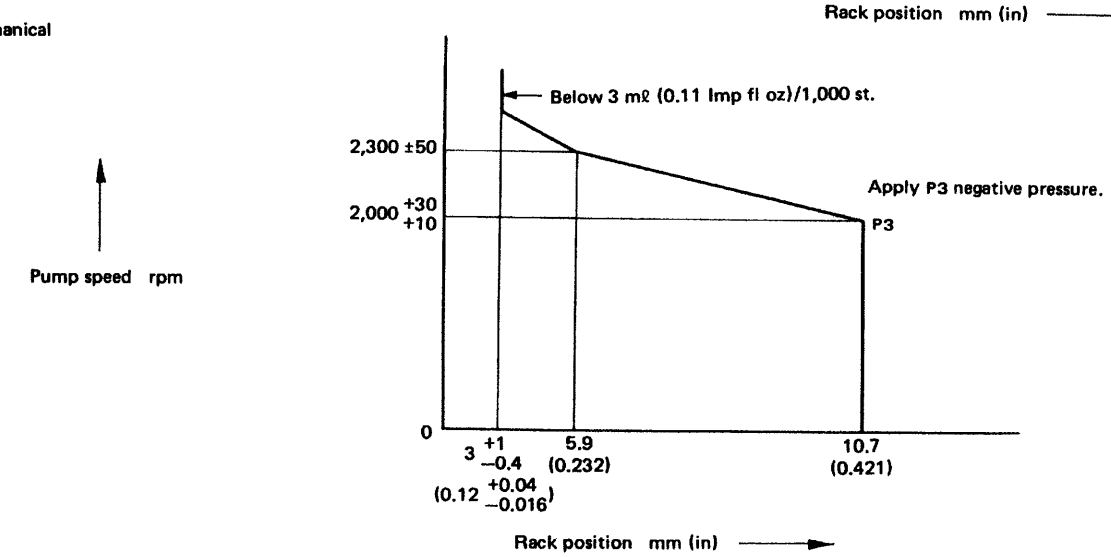

Pump No. 101631-9660: Set control rack limit to 16 mm (0.63 in)

Pump No. 101431-9590

Pneumatic

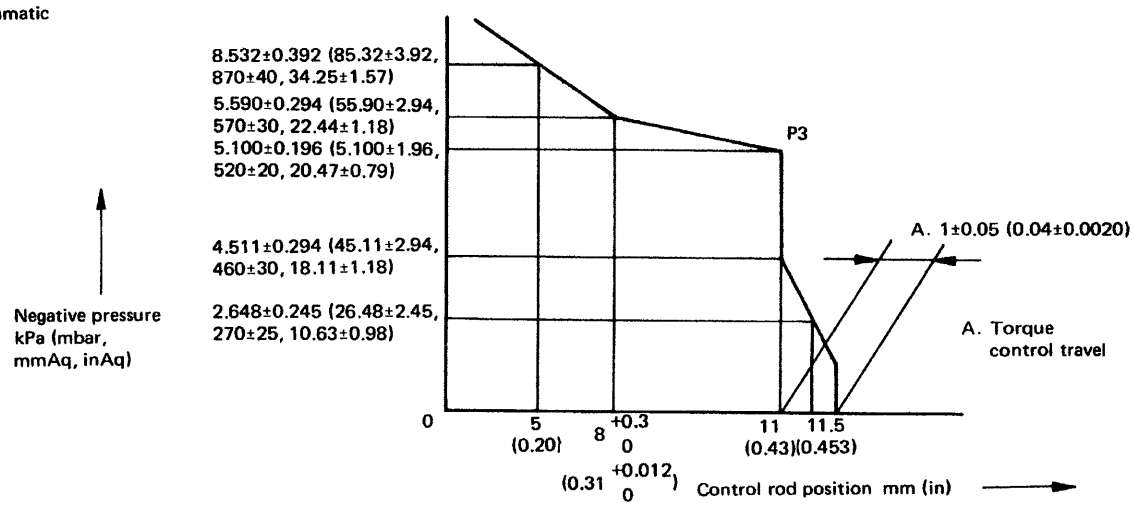

Mechanical

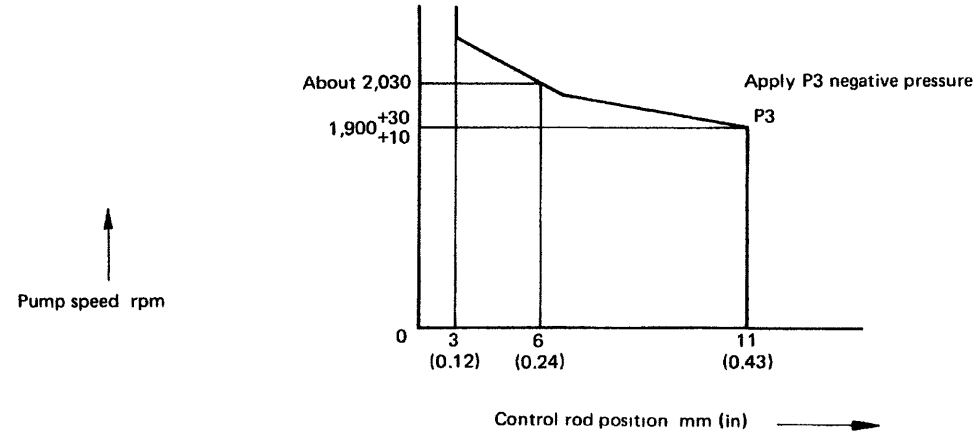

Pump No. 101433-9370

Pneumatic

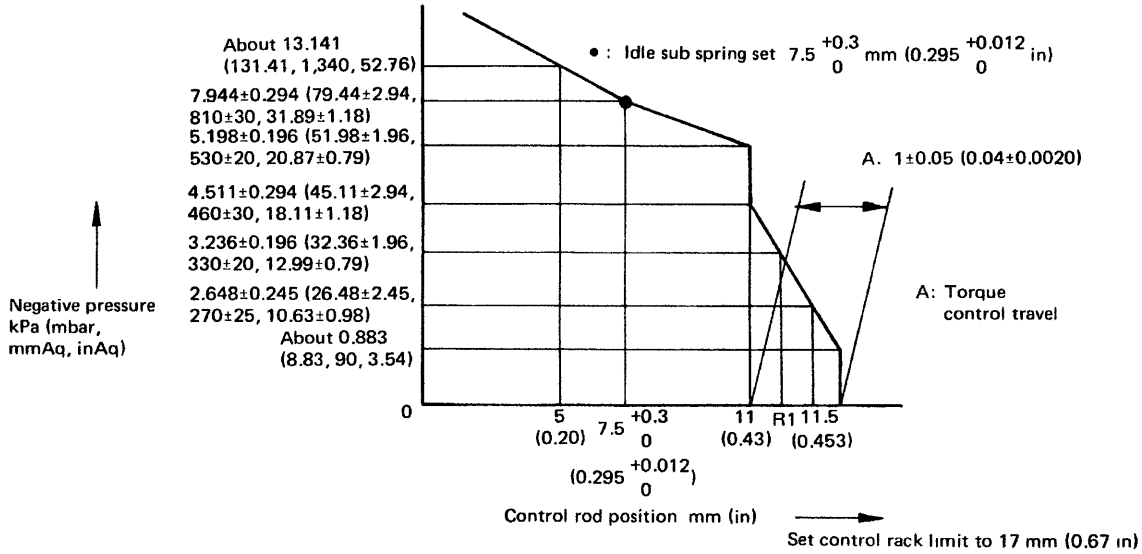

Mechanical

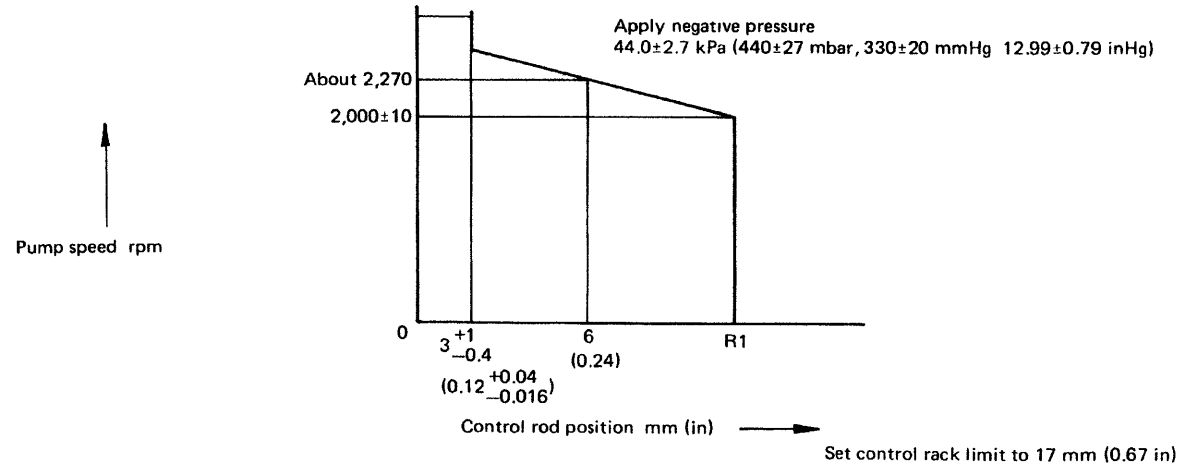

Pump No. 101433-9421

Pneumatic

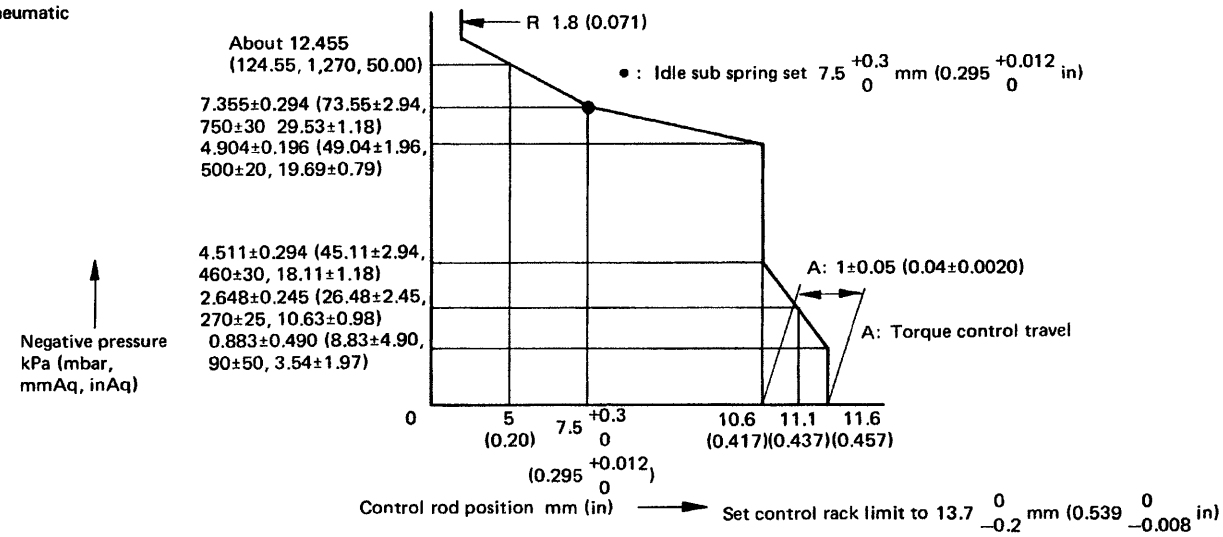

Mechanical

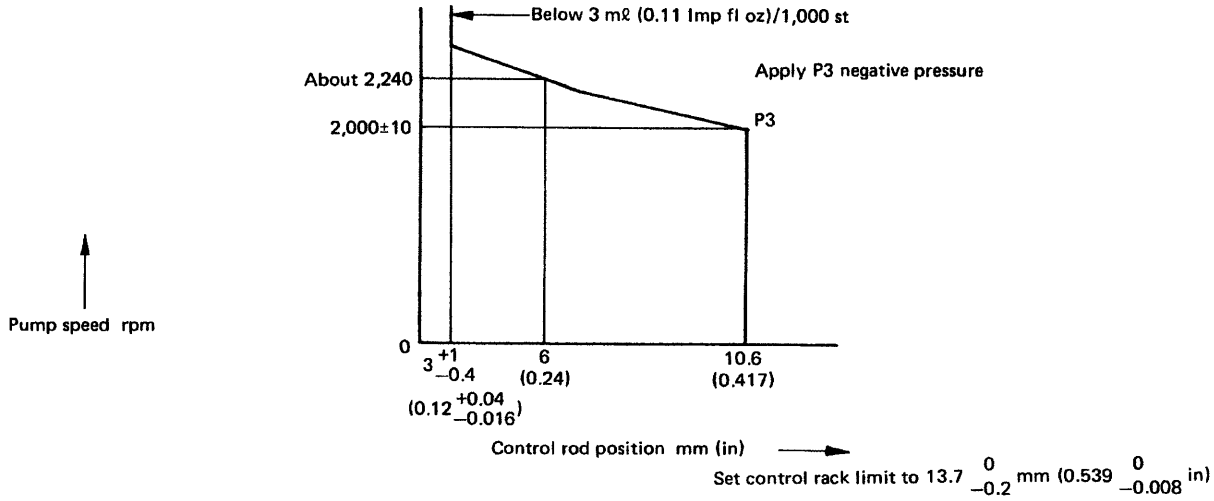

Pump Nos. 101441-9130, 101441-9170

Pneumatic

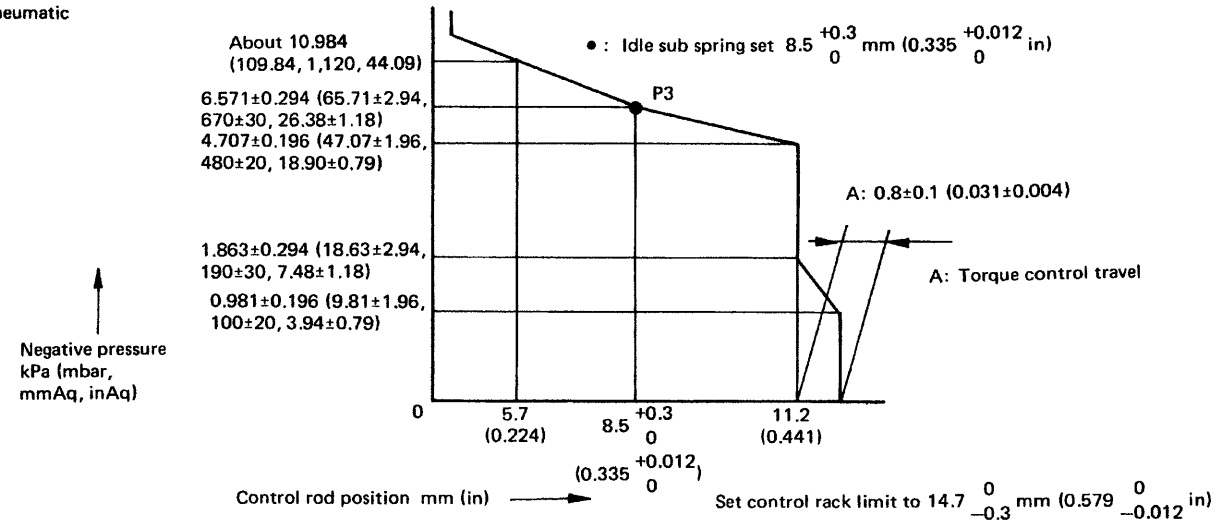

Mechanical

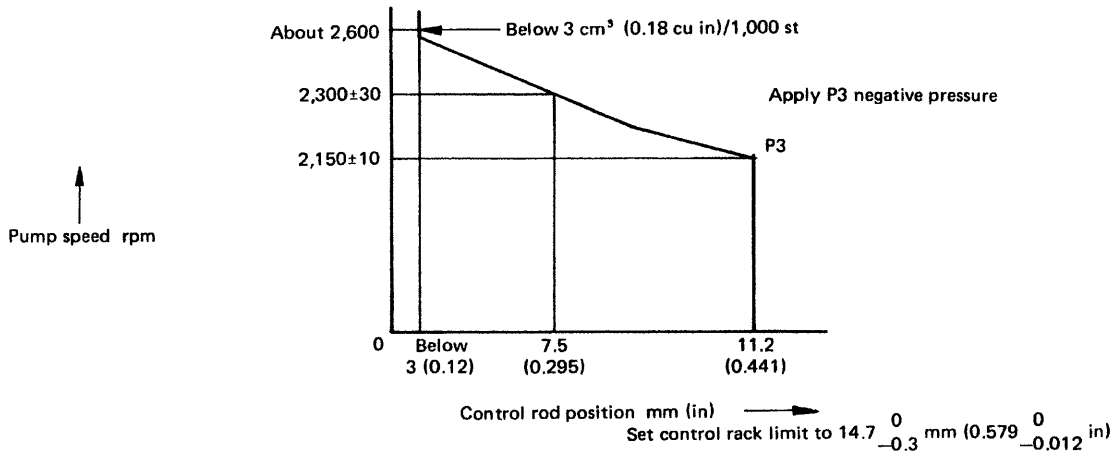

Pump No. 101631-9562

Pneumatic

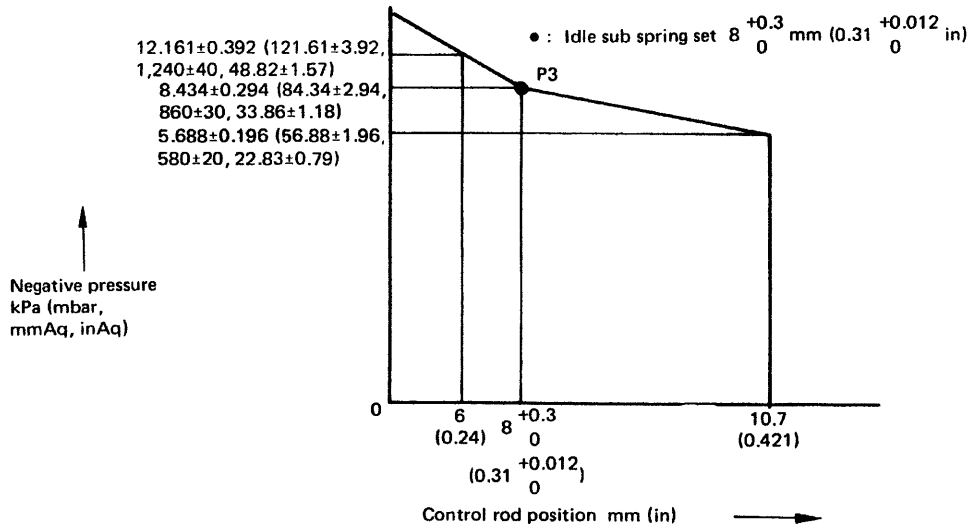

Mechanical

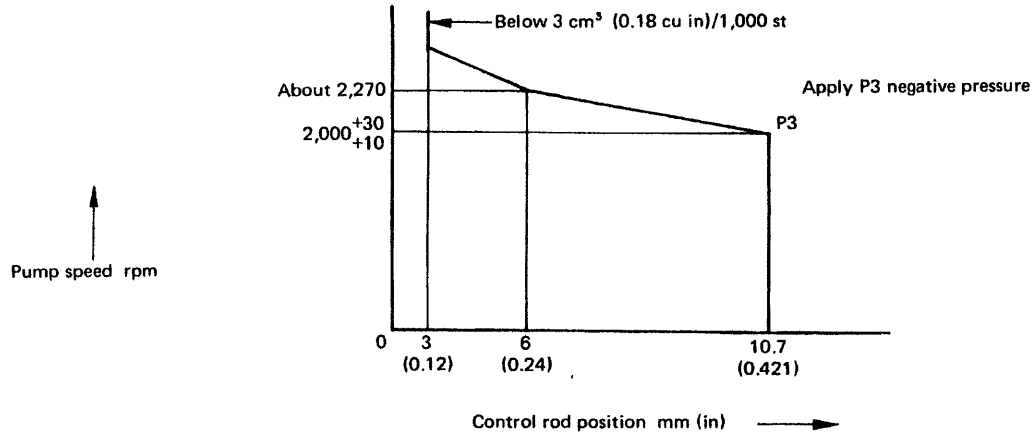

Pump Nos. 101441-9120, 101441-9160

Pneumatic

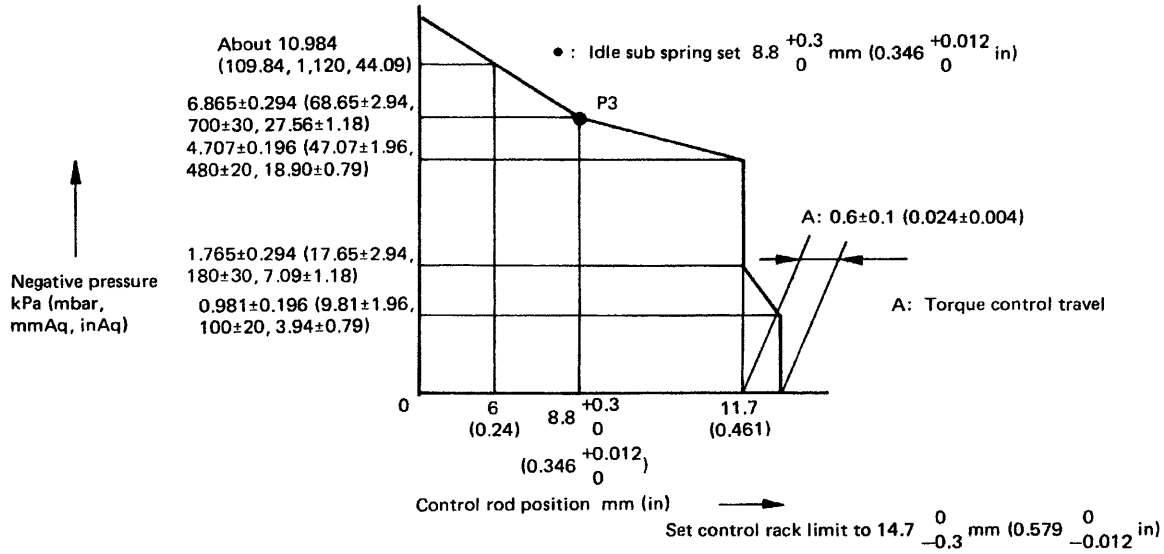

Mechanical

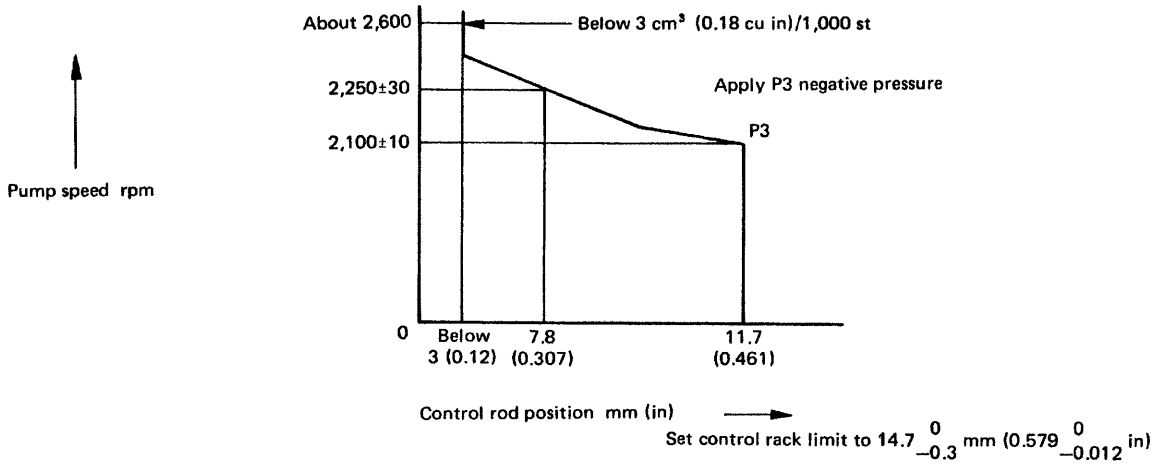

TIMER ADVANCE

Pump Nos. 101431-9710, 101431-9880, 101431-9900, 101431-9910, 101431-9980, 101433-9060, 101433-9070

Pump speed	rpm	Below 500	500	550	700	900	1,100	1,300	1,500
Degree for angle of lead	degree	Start 0	Below 0.5	Below 0.7	1 ±0.5	2 ±0.5	3 ±0.5	4 ±0.5	5 ±0.5

Pump Nos. 101433-9230, 101433-9260

Pump speed	rpm	Below 500	500	700	800	1,200	1,800
Degree for angle of lead	degree	Start 0	Below 0.5	Below 0.9	0.6 ±0.5	2 ±0.5	5 ±0.5

INJECTION PUMP ASSEMBLY (Diesel Kiki-Bosch in-line type)

Pump Nos. 101631-9600, 101631-9660

Pump speed	rpm	500	550	1,100	1,500	1,900	
Degree for angle of lead	degree	Below 0.5	Below 0.7	1.7 ±0.5	3.6 ±0.5	6 ±0.5	

Pump Nos. 101631-9551, 101631-9562, 101631-9571

Pump speed	rpm	Below 500	500	550	1,100	1,500	1,900
Degree for angle of lead	degree	Start 0	Below 0.5	Below 0.7	2.2 ±0.5	4.4 ±0.5	7.5 ±0.5

Pump Nos. 101441-9040, 101441-9050, 101441-9120, 101441-9160

Pump speed rpm	500	800	1,200	1,800	2,000
Degree for angle of lead degree	Below 0.5	0.6±0.5	2±0.5	5±0.5	6±0.5

Pump Nos. 101431-9430, 101431-9590, 101431-9770

Pump speed	rpm	500±50	700	900	1,100	1,300	1,500
Degree for angle of lead	degree	Start 0	1±0.5	2±0.5	3±0.5	4±0.5	5±0.5

Pump Nos. 101433-9370, 101433-9401, 101433-9421

Pump speed	rpm	500	700	800	1,200	1,800
Degree for angle of lead	degree	Below 0.5	Below 0.9	0.6±0.5	2±0.5	5±0.5

Pump No. 101433-9431

Pump speed	rpm	500	900	1,200	1,500
Degree for angle of lead	degree	Below 0.5	1.8±0.5	3.3±0.3	5±0.5

Pump Nos. 101441-9130, 101441-9170

Pump speed	rpm	500	1,200	2,150
Degree for angle of lead	degree	Below 0.5	2±0.5	7±0.5

TIGHTENING TORQUE

	N·m	kg-m	ft-lb
Injection pump Injection pump to engine front plate	20 - 25	2.0 - 2.5	14 - 18
Delivery valve holder	29 - 34	3.0 - 3.5	22 - 25
Screw plug	54 - 74	5.5 - 7.5	40 - 54
Tappet adjusting bolt lock nut	25 - 29	2.5 - 3.0	18 - 22
Governor Flyweight round nut	49 - 59	5.0 - 6.0	36 - 43
Timer Round nut	59 - 69	6.0 - 7.0	43 - 51
Lock nut	98 - 177	10 - 18	72 - 130
Injection nozzle assembly Nozzle holder to nozzle nut	78 - 98	8.0 - 10.0	58 - 72
Injection nozzle assembly to engine	59 - 69	6.0 - 7.0	43 - 51
Injection tube flare nut	29 - 34	3.0 - 3.5	22 - 25
Overflow nut	39 - 49	4.0 - 5.0	29 - 36
Spill tube nut	39 - 49	4.0 - 5.0	29 - 36
Fuel filter Center bolt	15 - 20	1.5 - 2.0	11 - 14
Lead line connector bolt	54 - 64	5.5 - 6.5	40 - 47

SPECIAL SERVICE TOOLS

Tool number	Tool name
DK05794002	Universal vise
ST17080000 (DK57916432)	Timer wrench
DK57926512	Extractor
DK57931612	Tappet clamp
DK57920032	Delivery valve extractor
DK57911010	Tappet wrench
DK05790502	
① DK57916432	Special wrench
② DK57932020	Timer spring support
③ DK57926581	Timer extractor
DK57924162	Base assembly
④ DK57924190	Bushing
⑤ DK57924180	Bushing guide
⑥ DK57924170	Bushing guide
⑦ DK57924161	Base

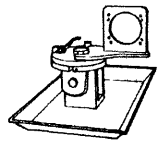
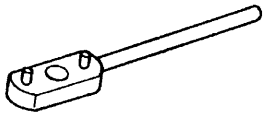

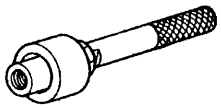

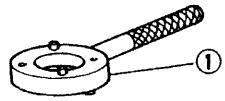

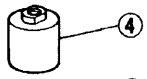

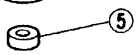

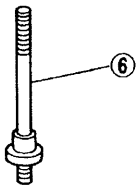

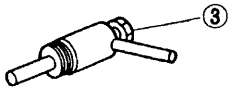

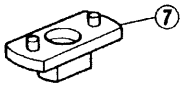

Tool number	Tool name
DK57931210	Plunger spring holder
DK57915010	Special wrench
DK57921012	Tappet insert
DK57921412	Plunger insert
DK57915422	Special wrench
DK57926012	Extractor
KV11257802	Nozzle holder
KV11257800	Nozzle
DK05782601	Measuring device
KV11257805	Injection tube

Tool number	Tool name
ST19530000	Injection pump timer puller 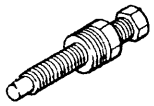
KV11205781	Securing stand 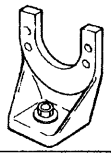
KV11205782	Tappet lift gauge 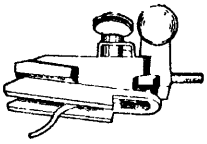
KV11205784	Timer coupling 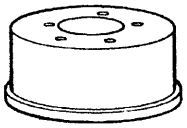

INJECTION PUMP ASSEMBLY (DIESEL KIKI-Bosch VE-type)

DESCRIPTION

1. Disassembly and assembly of this VE-pump should be done only in service shops authorized by NISSAN/DATSUN or by the pump manufacturer.
2. Before removing fuel injection pump from vehicle, check closely to make sure that it is apparently malfunctioning.

Refer to Trouble-shooting in MA section.

INJECTION PUMP

REMOVAL

1. Remove injection tube.

Cover the injection nozzle assembly with a plug to block the entry of dirt.

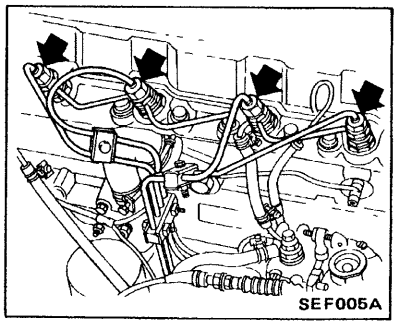

2. Remove fuel cut solenoid wire.

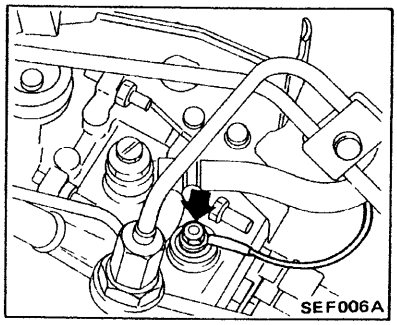

3. Remove accelerator wire and disconnect overflow hose, fuel inlet hose and fuel return hose.

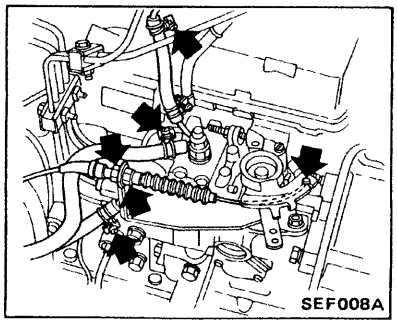

4. Remove injection pump drive gear cover.

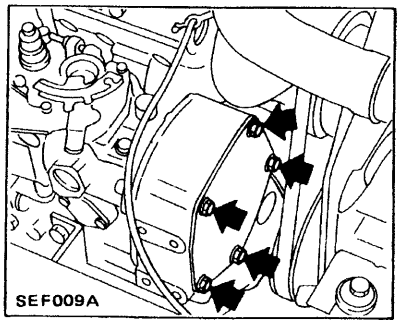

5. Loosen injection pump drive gear nut and remove drive gear by using puller.

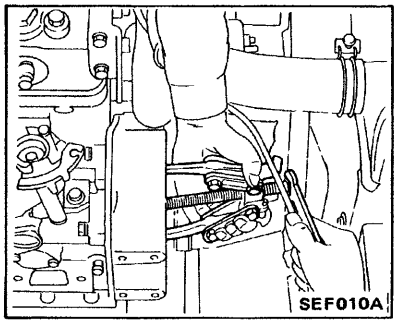

6. Remove injection pump fixing nuts and bolts.

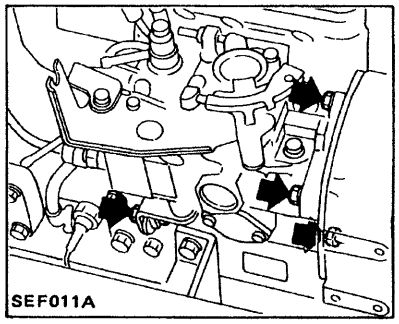

7. Take out injection pump with injection tubes.

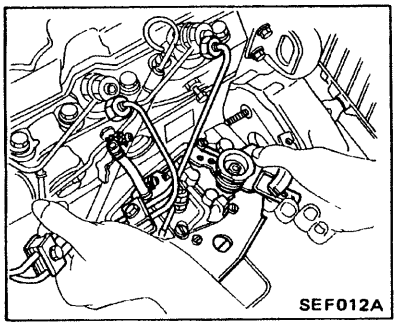

Disconnect injection tube from pump once it is removed.

INSTALLATION

1. Align front cover and crank pulley mark for setting No. 1 piston at T.D.C.

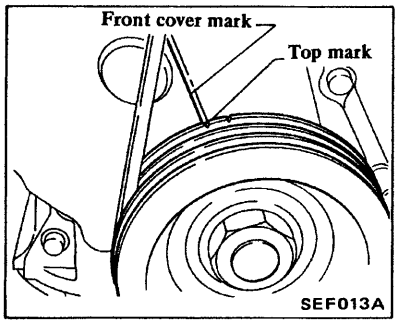

2. Injection pump

(1) Temporarily set injection pump so that the flange of pump is aligned with aligning mark on front cover.

(2) Mesh injection pump drive gear with idler gear **at "Y" mark** and then align gear to key way of injection pump camshaft **while turning crank pulley.**

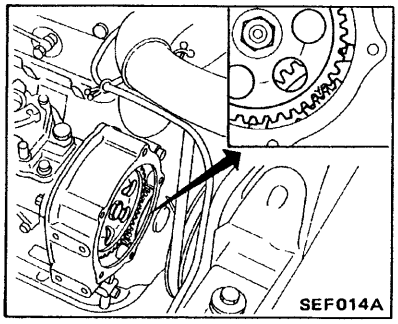

Coat key with grease to prevent it from falling into front cover, and lay a rag on front cover.

(3) Tighten drive gear fixing nut.

Ⓣ : Drive gear fixing nut
59 - 69 N·m
(6 - 7 kg-m,
43 - 51 ft-lb)

(4) Install drive gear cover with new gasket.

ADJUSTMENT

1. Loosen the three injection pump mounting nuts and mount bracket bolt.

2. Remove plug bolt from distributor head and install Tool.

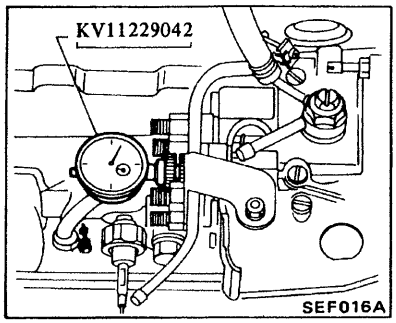

3. Plunger lift measurement and adjustment.

(1) Turn crankshaft counterclockwise 20 to 25 degrees from No. 1 Piston at Top Dead Center.

(2) Find dial gauge's needle rest position at step (1) set position, then set the gauge to zero.

(3) Turn crankshaft clockwise until No. 1 piston is set at Top Dead Center.

(4) Read dial gauge indication.

SD22:
1.03±0.02 mm
(0.0406±0.0008 in)
0.95±0.02 mm
(0.0374±0.0008 in)
[Only for pump No. 104749-4040 and 104749-4080]
SD23:
0.94±0.02 mm
(0.0370±0.0008 in)
SD25:
0.89±0.02 mm
(0.0350±0.0008 in)

(5) If dial gauge indication is not within the above range, turn pump body until it falls within standard range.

a. If indication is smaller than the specified value, turn pump body counterclockwise.
b. If indication is larger than the specified value, turn pump body clockwise.

4. Tighten injection pump securely.

Ⓣ : Injection pump fixing bolt
20 - 25 N·m
(2.0 - 2.5 kg-m,
14 - 18 ft-lb)
Injection pump to mounting bracket
16 - 22 N·m
(1.6 - 2.2 kg-m,
12 - 16 ft-lb)

5. Disconnect dial gauge and reinstall plug bolt with new washer in its position.
6. Connect injection tubes.

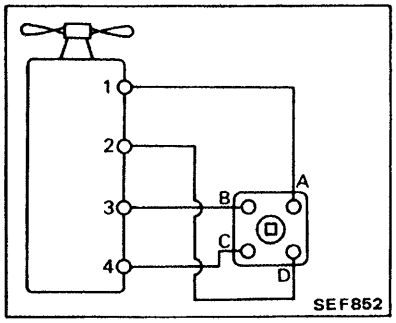

Use two wrenches for removing and installing tubes.

Ⓣ : Flare nut
29 - 34 N·m
(3.0 - 3.5 kg-m,
22 - 25 ft-lb)

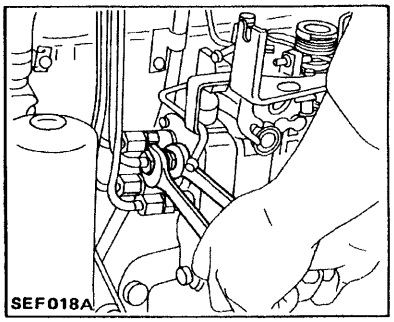

7. Bleed air from fuel system.

CHECKING PRIMING PUMP

1. Disconnect fuel return hose.

Place a container or jug beneath hose end.

2. Prime priming pump to make sure that fuel overflows at hose end. If not, replace priming pump.

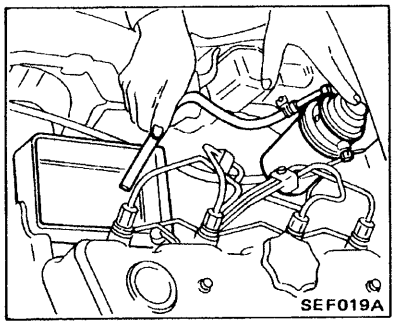

DRAIN WATER

Drain water from fuel filter in accordance with maintenance schedule. Also do this when warning light comes on.

1. Disconnect fuel filter sensor harness.
2. Loosen fuel filter sensor and drain water.

a. Be sure to place a container beneath fuel filter.
b. Pumping priming pump will quicken water drainage.

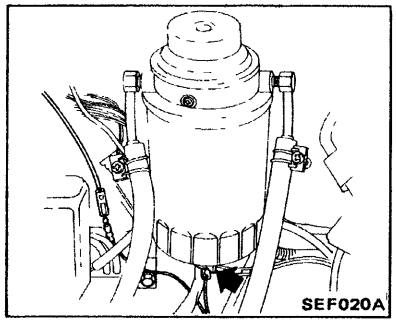

3. When fuel overflows, retighten and connect fuel filter sensor.

BLEEDING FUEL SYSTEM
(Engine on vehicle)

Air should be bled out of fuel system when injection pump is removed or fuel system is repaired.

1. Loosen vent screw and priming.

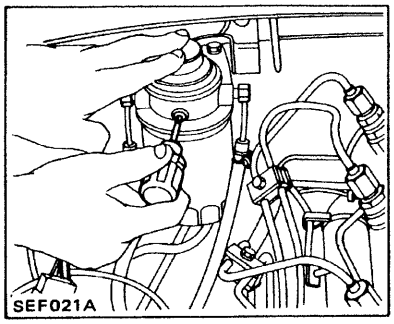

Make sure that fuel overflows at vent screw hole.
2. Tighten vent screw.
3. Loosen injection pump bleeder screw/or disconnect return hose and priming.

Protect pump and engine mounts from fuel splash with rags.

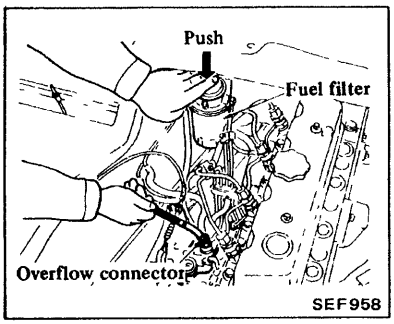

4. Make sure that fuel overflows at bleeder screw/tube end, then tighten it/connect hose.

If engine will not start, loosen injection tubes at nozzle side and crank engine until fuel overflows from injection tube. Tighten injection tube flare nuts.

IDLE AND MAXIMUM SPEED ADJUSTMENTS

Refer to Section MA for these adjustments.

DISASSEMBLY (Without high altitude compensator)

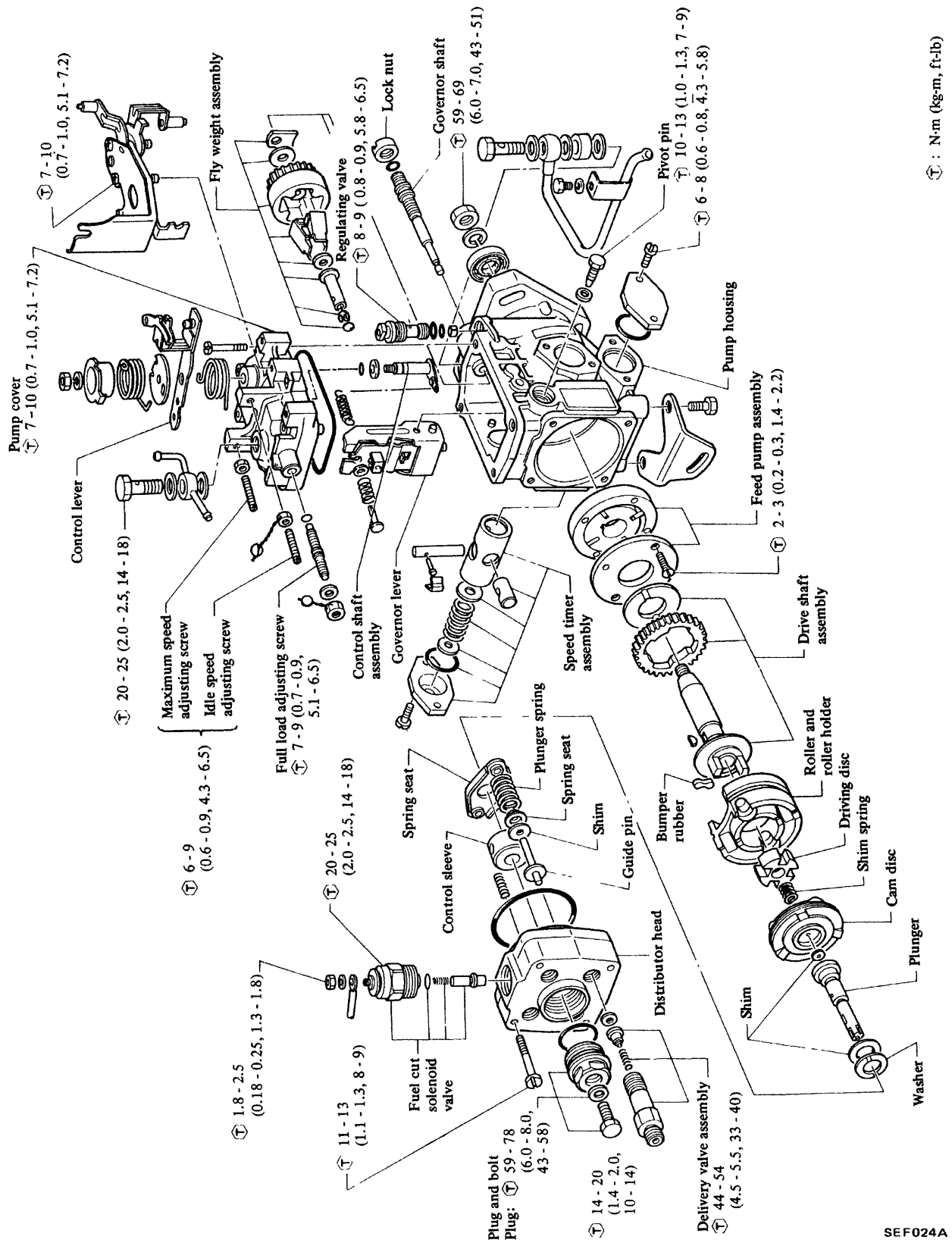

DISASSEMBLY (With high altitude compensator)

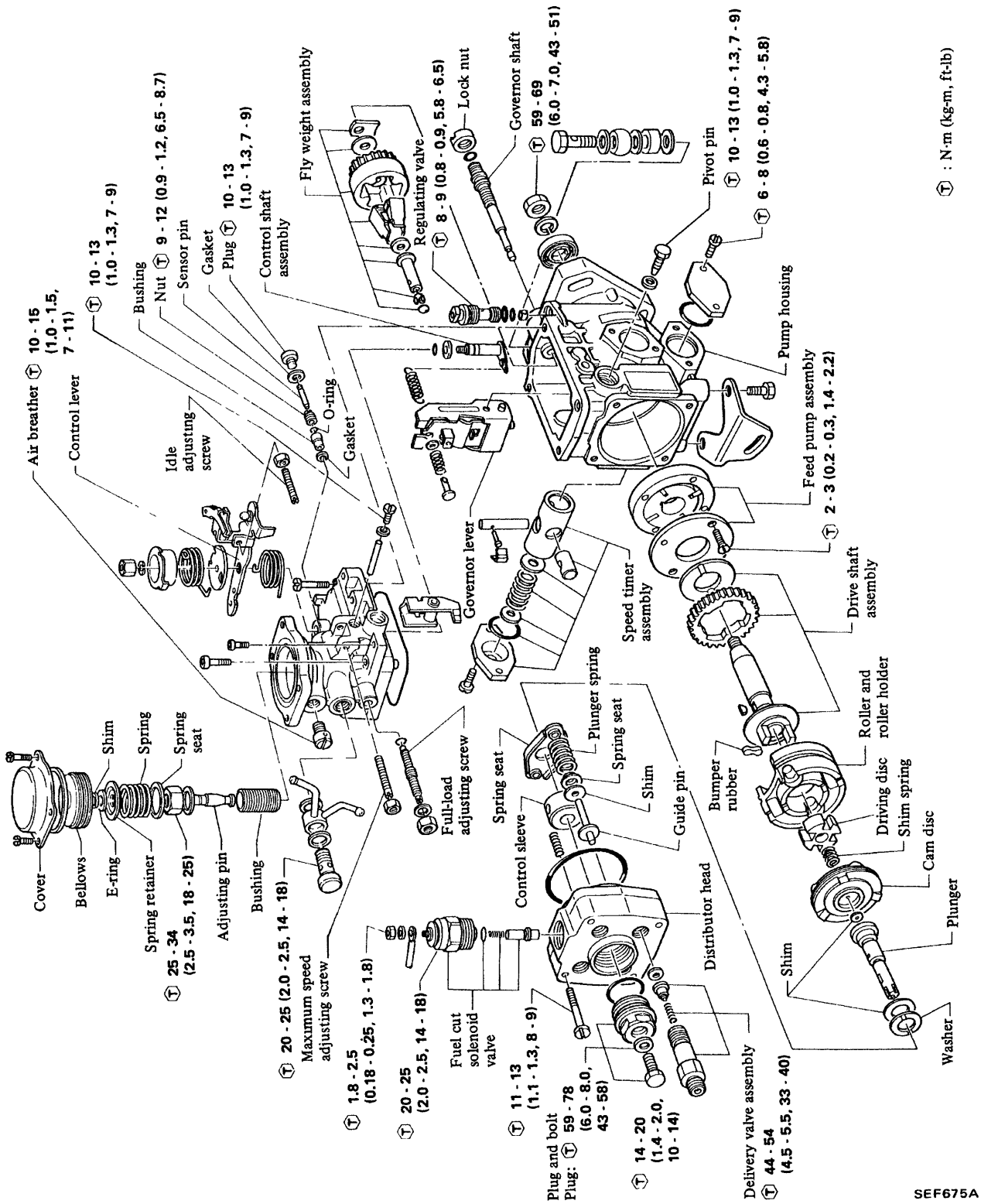

PREPARATION

- Before performing disassembly and adjustment, test fuel injection pump and note test results except when testing is impossible.
- Prior to beginning to disassemble fuel injection pump, clean all dust and dirt from its exterior.
- Disconnect overflow valve, and drain fuel.
- Clean work bench completely, removing all foreign matter
- Collect only those service tools necessary for disassembling and reassembling.
- Be careful not to bend or scratch any parts.

Special tools for disassembling and reassembling fuel injection pump

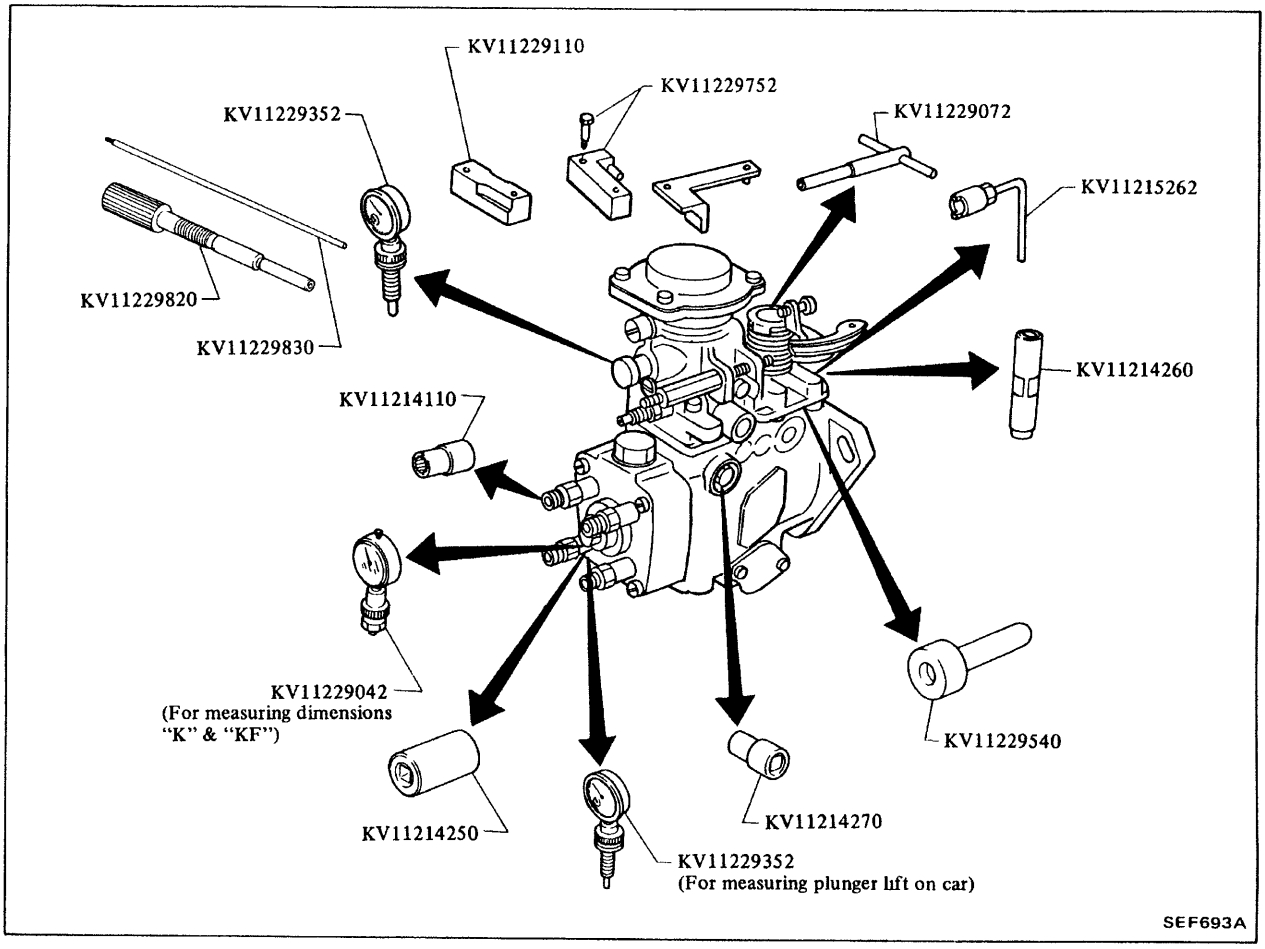

1. Remove governor cover.

With high altitude compensator

(1) Remove nut, spring washer, spring seat and spring from control lever.

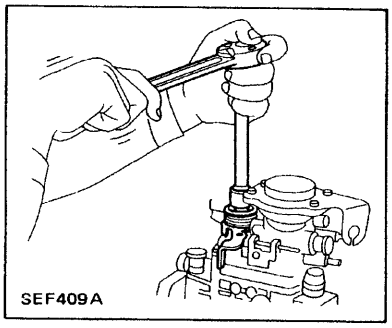

(2) Draw aligning mark on control lever and control shaft.

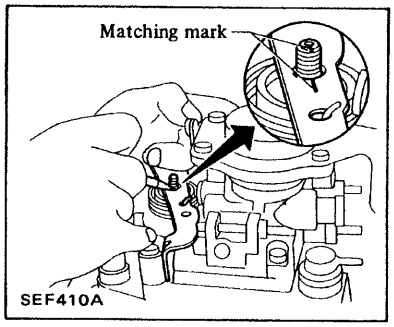

(3) Remove compensator cover.

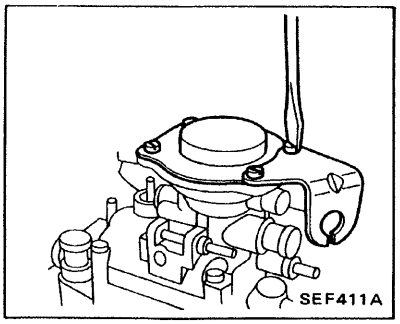

(4) Take out bellows and adjusting shim.

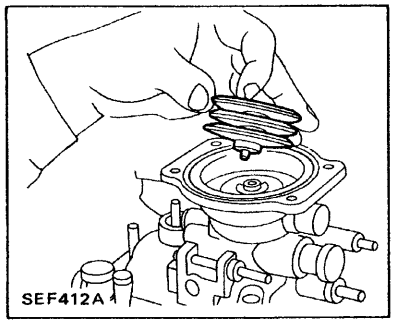

(5) Remove E-ring and take out spring seat and spring.

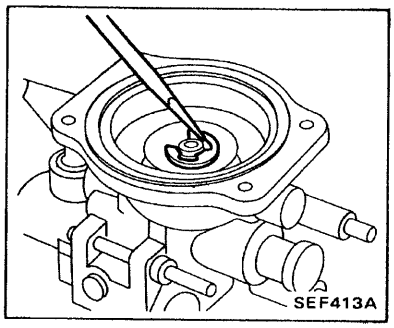

(6) Loosen nut.

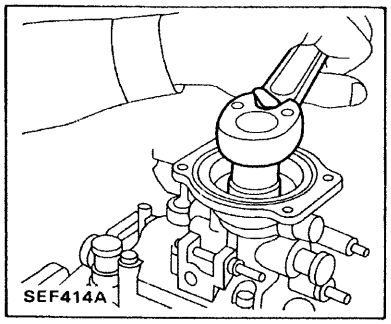

(7) Remove governor cover plugs.

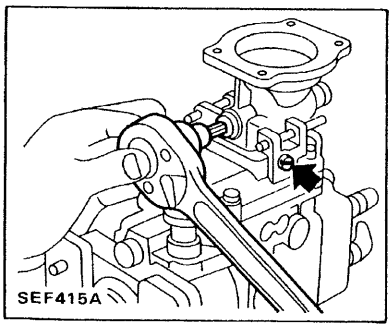

(8) Remove governor cover.

a. Remove sealing wire and idle and maximum speed adjusting screws.

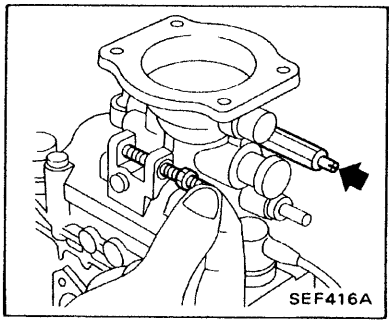

b. Remove governor cover fixing bolts and screws.

Use hexagon wrench.

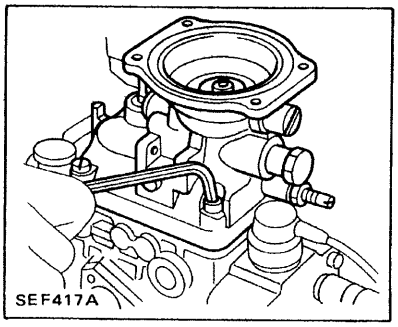

c. Move control shaft down by lightly tapping on the end with a wooden mallet.

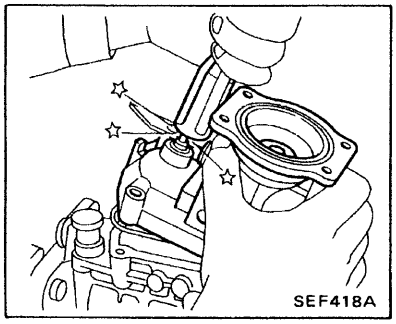

(9) Remove high altitude compensator parts.

a. Remove plugs.

b. Remove lever pin and lever using suitable drift.

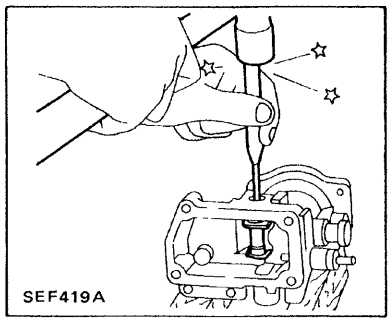

c. Remove plug and pin.

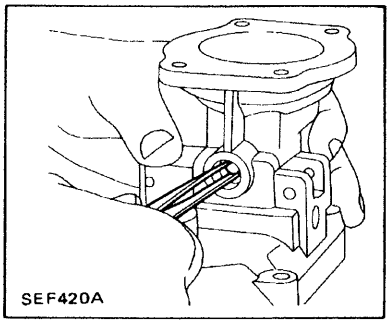

d. Remove retainer, sleeve and washer.

Use a suitable screwdriver to remove retainer.

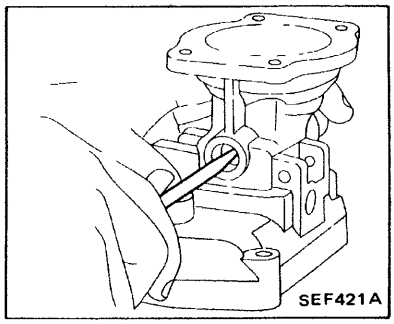

e. Remove nut and adjusting rod.

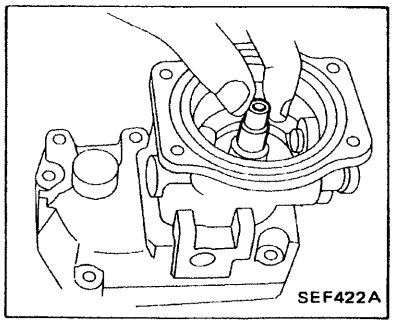

f. Removing bushing.

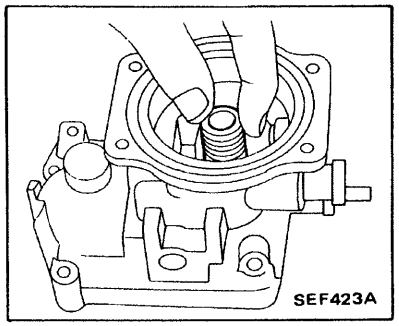

Without high altitude compensator

(1) Remove nut, spring washer, spring seat and spring from control lever.

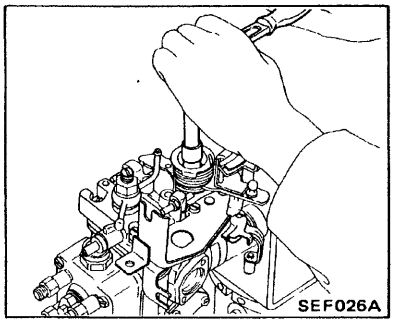

(2) Draw aligning marks on control lever and control shaft.

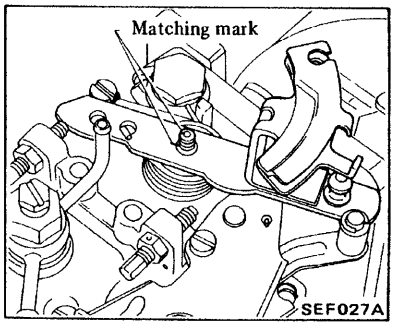

(3) Remove governor cover.

Move control shaft down by lightly tapping on the end with a wooden mallet.

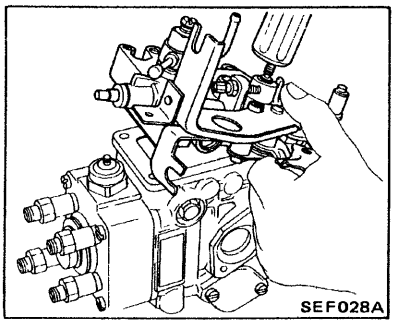

2. Remove control shaft from tension lever.

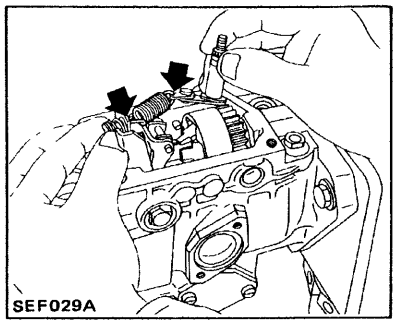

3. Remove governor shaft.

Loosen lock nut by turning it clockwise.

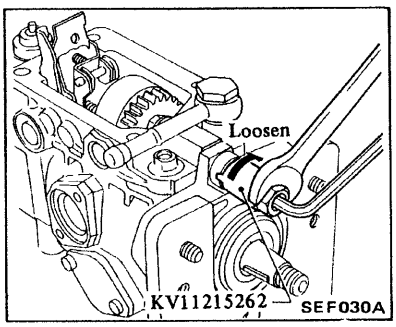

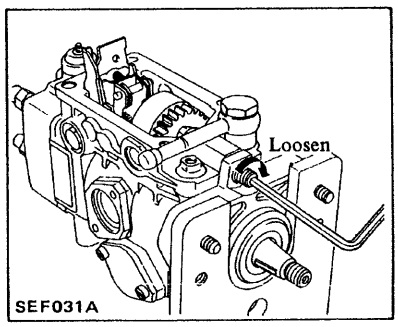

4. Remove governor sleeve, washer and flyweight, along with flyweight holder, then remove washer and shim(s).

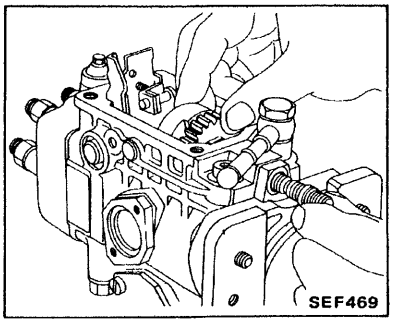

5. Loosen left and right governor pivot bolts.

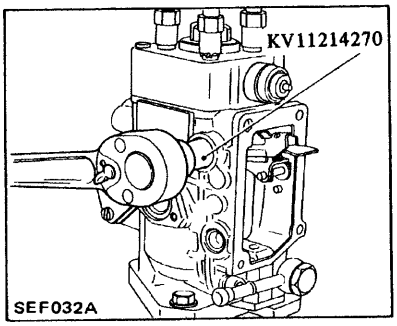

6. Remove plug.

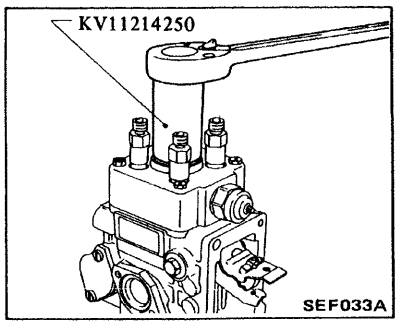

7. Remove delivery holder, spring, delivery valve and gasket.

Distributor head has letters (A, B, C, D) stamped on it. Remove lettered parts in alphabetical order and arrange neatly.

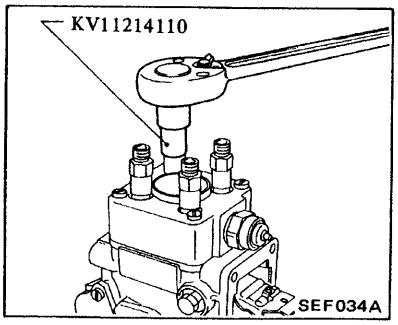

8. Remove fuel-cut solenoid valve.

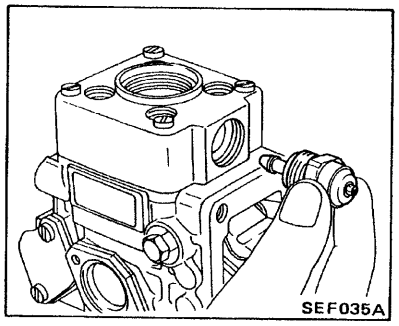

9. Remove distributor head.

Be careful not to drop the two support springs and guide pins.

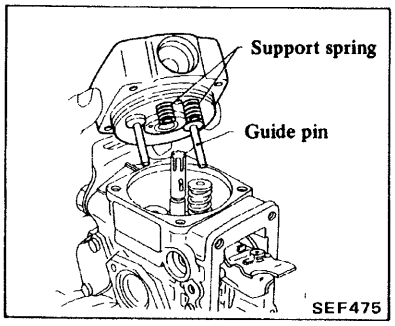

10. Remove plunger assembly.

Lift plunger, along with control sleeve, shim, spring seat and plunger spring.

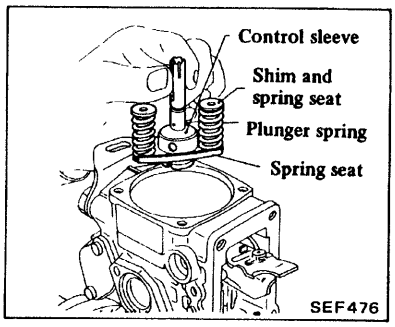

11. Remove governor lever assembly.

Avoid pulling on start spring and start idle spring.

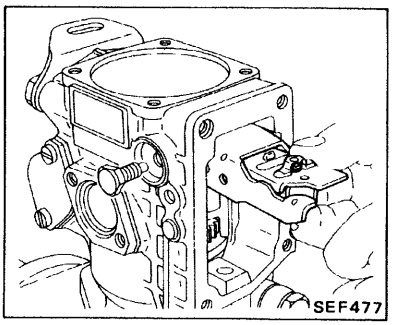

12. Remove shim, cam disc, spring and driving disc.

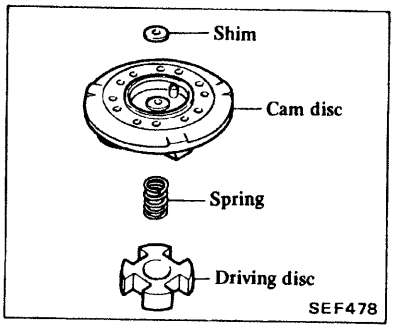

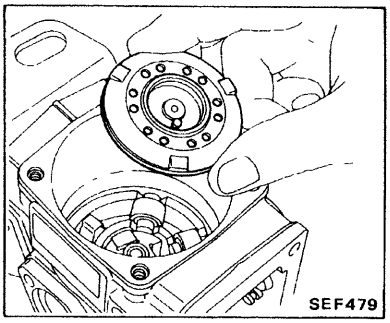

13. Remove clips and pins.

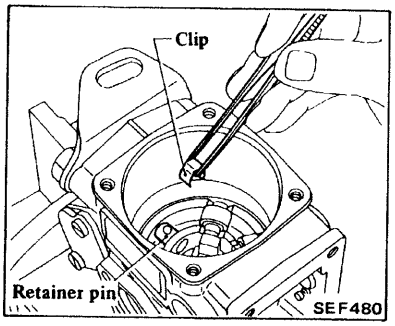

14. Move adjusting pin to center of roller holder, as shown.

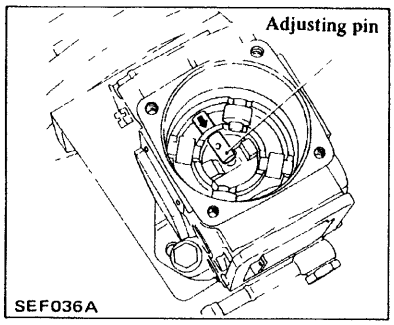

15. Lift out roller holder with rollers without tilting.

Be careful not to drop rollers.

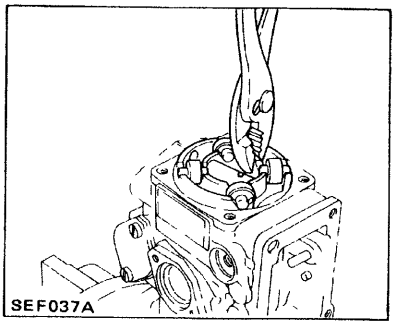

16. Remove drive shaft.

a. Be careful not to scratch inner surface of fuel injection pump body.
b. Remove drive gear side key.
c. Be careful not to drop key.

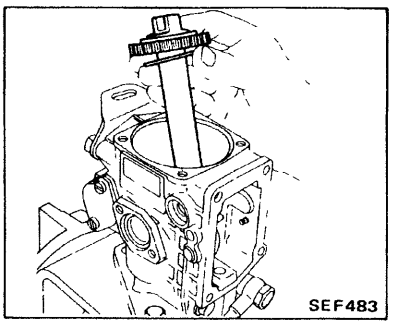

17. Remove speed timer cover, O-ring, shims, spring, piston and slider.

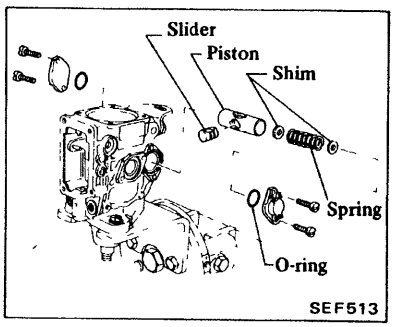

18. Remove regulating valve.

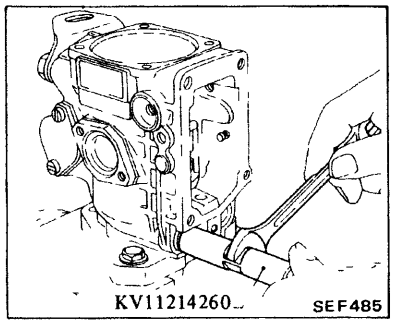

19. Loosen screw from feed pump cover.

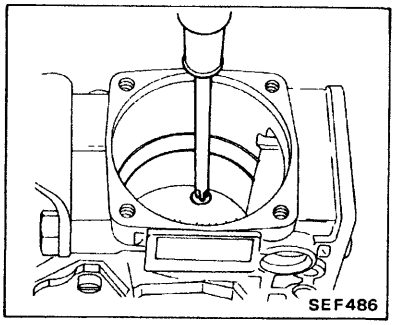

20. Remove cover and feed pump assembly as a unit.
1) Insert Tool KV11229540 into fuel injection pump housing.
2) Turn injection pump's top side down, as shown.
3) Remove cover and feed pump assembly as a unit.

a. If cover and feed pump assembly are hard to remove or stuck midway, strike pump body lightly.
b. Do not move position of vanes.

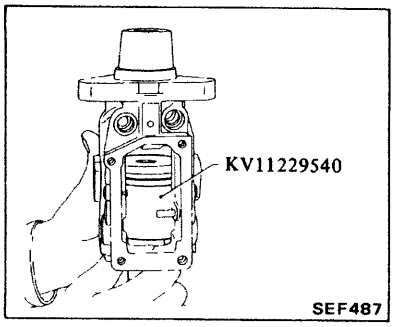

INSPECTION

1. Wash all parts completely.
2. Replace worn or damaged parts.
3. Control edge of plunger must be sharp and contact surfaces must not exhibit any noticeable running tracks. If such is not the case, replace plunger.
4. Check for height of all rollers.

Difference in max. and min. roller height should be less than 0.02 mm (0.0008 in).

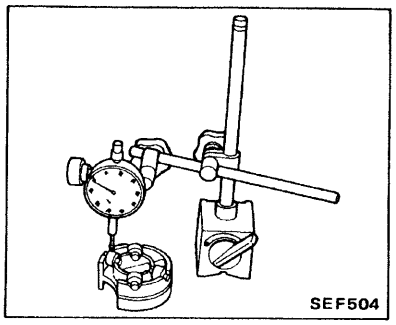

ASSEMBLY

It should be noted that following service parts assemblies should always be replaced as a unit.

- Distributor head, control sleeve and plunger
- Feed pump assembly (pump impeller and vanes with eccentric ring)
- Plunger spring kit
- Roller assembly
- Flyweight kit
- Governor lever assembly

PREPARATION

Dip all movable parts and O-rings in test oil and clean.

1. Set feed pump cover, rotor with vanes, and ring on service tool KV11229540.
1) Align the three holes in feed pump cover and ring.
2) Do not change positions of vanes.
3) Holes A and B in ring are not equally spaced to inner wall of ring.

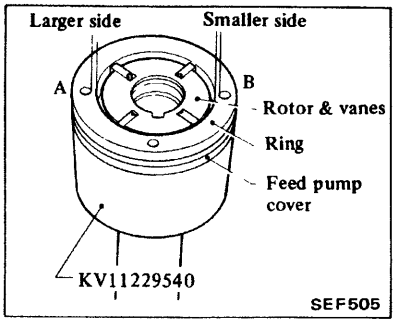

2. Install feed pump cover, rotor with vanes, and ring to pump housing.

Be careful to install liner correctly. If left and right are reversed, fuel will not be discharged from feed pump.

When fuel injection pump rotates in direction "R"

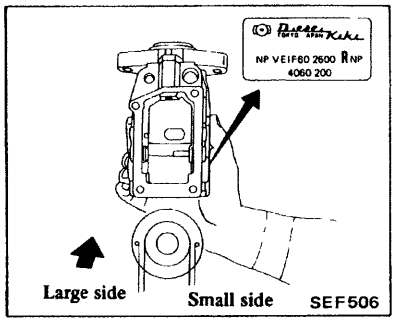

The following description applies to fuel injection pumps that rotate in direction "R".

3. Turn fuel injection pump 180°, and remove service tool KV11229540. Tighten screw to retain pump cover.

a. When tightening screws, be careful not to scratch inner wall of pump housing.
b. After tightening screws, make sure that rotor with vanes moves smoothly.

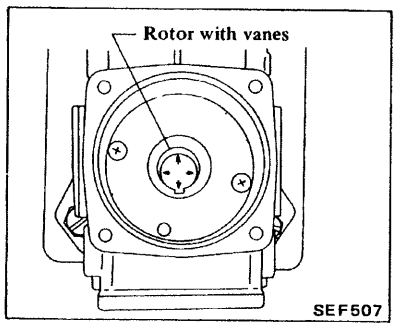

4. Make sure that drive shaft and gear are assembled properly, as shown.

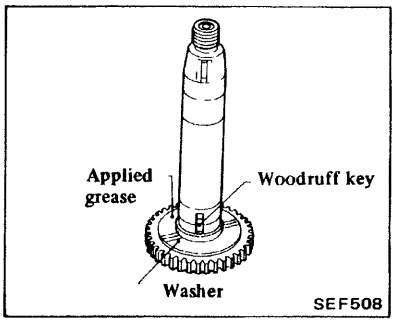

5. Install drive shaft to housing while key in drive shaft engages with key groove in rotor.

Be careful not to scratch oil seals and inner wall of housing.

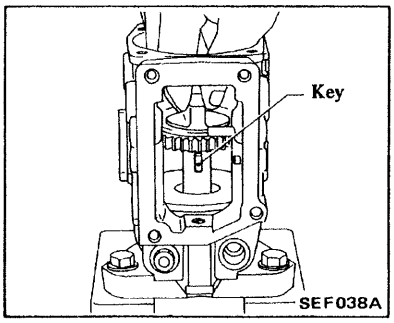

6. Set drive shaft's nail parallel to timer.

7. Install roller and holder.

a. Do not interchange roller positions. If they are interchanged, refer to Inspection for correction.
b. Make sure that washer is situated outward of rollers.

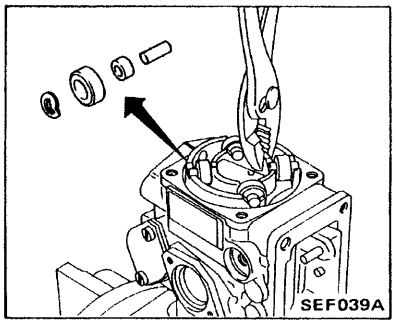

8. Align holder and timer adjusting pin holes.

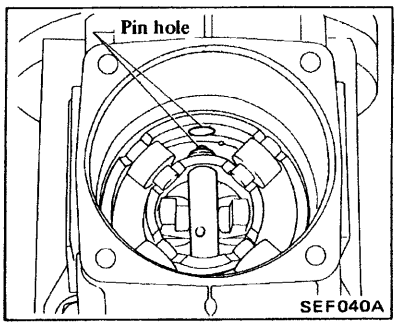

9. Install timer piston and slider as a unit.

a. Make sure that hole in slider faces towards roller holder.
b. Make sure that concave hole in piston is on same side as return hole.

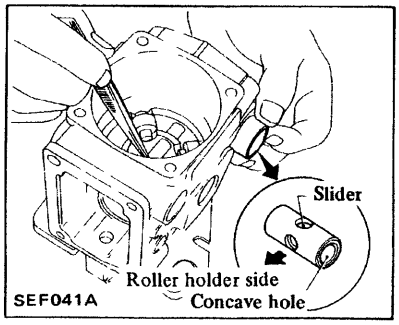

10. Insert timer adjusting pin into timer piston slider, and secure with retaining pin and clip.

Make sure that timer piston moves smoothly.

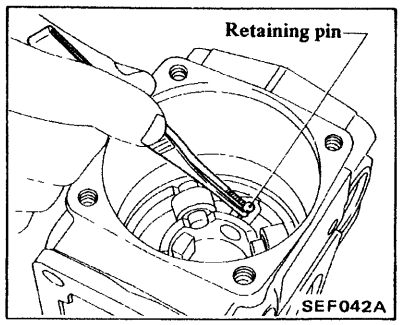

11. Install timer, using a 0.6 mm (0.024 in) thick shim, then install timer spring, shim, O-ring, and cover, in that order.

a. Use at least one shim on each side of timer spring.
b. Use shims that have been selected during bench test.

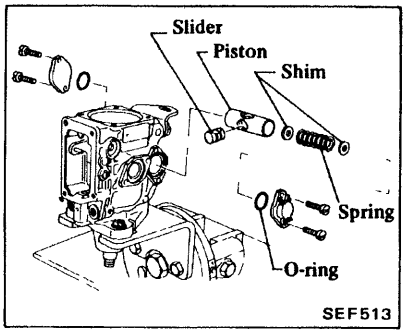

12. Install regulating valve.

Be careful not to scratch O-rings.

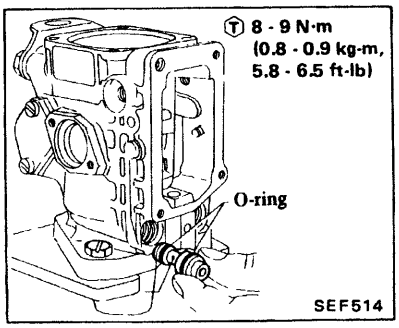

13. Install driving disc with its concave side facing up.

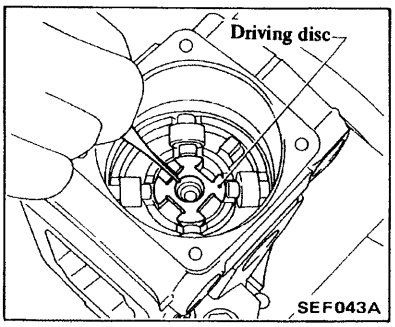

14. Measurement of plunger spring set length (dimension "KF")

Dimension "KF" is the distance between the end face of the distributor barrel and the end face of the plunger.

(1) Install distributor head, as shown.

- **Do not insert shim into "A" portion before measuring.**

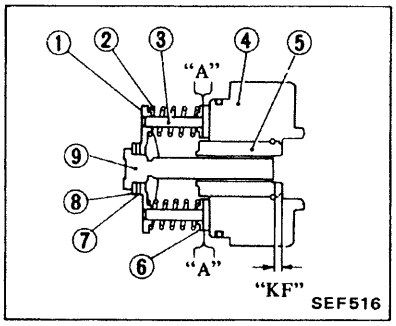

1	Spring seat	6	Spring seat
2	Plunger spring	7	Washer
3	Guide pin	8	Shim
4	Distributor head	9	Plunger
5	Distributor barrel		

(2) Set dial gauge so that it can compress 25 mm (0.98 in), and reset to zero.

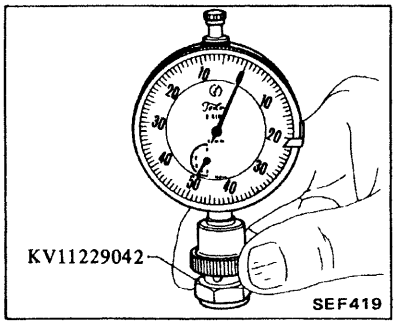

(3) Apply force (not enough to compress plunger spring) to plunger's bottom in axial direction, and measure dimension "KF" with dial gauge, as shown.

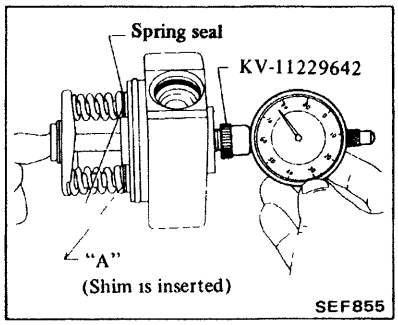

(4) Determine the shim to be used by calculating difference between standard and measured dimensions.

Standard dimension "KF":
5.7 - 5.9 mm
(0.224 - 0.232 in)

[Example]
When measured (dial gauge reading) value is 5.2 mm,
5.7 mm – 5.2 mm = 0.5 mm (shim thickness to be used)

a. When there are not shims available of a thickness which matches specified dimensions, use slightly thicker shim.
b. Use selected shim with distributor head in step 14-(3) above.
c. Use the same size shim on each side of distributor head.
d. Shims are available in seven different thicknesses.

Part number	Thickness mm (in)
16882-V0700	0.5 (0.020)
16882-V0701	0.8 (0.031)
16882-V0702	1,0 (0.039)
16882-V0703	1.2 (0.047)
16882-V0704	1.5 (0.059)
16882-V0705	1.8 (0.071)
16882-V0706	2.0 (0.079)

15. Adjustment of plunger dimensions (Measurement of dimension "K")

Dimension "K" is the distance from the end face of the distributor barrel to the end face of the plunger top, when the plunger is at the bottom dead center position.

(1) Install parts as shown.

a. Do not install "spring" on driving disc.
b. When inserting plunger and shim into cam disc, make sure that drive pin is situated in groove at bottom of plunger.

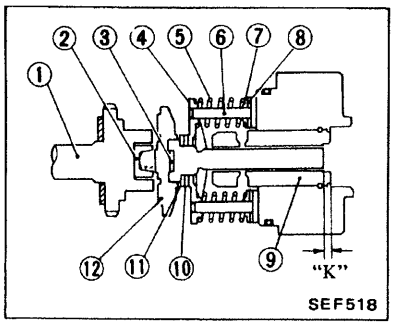

1	Drive shaft	7	Spring seat
2	Driving disc	8	Shim
3	Shim	9	Distributor barrel
4	Spring seat	10	Washer
5	Plunger spring	11	Shim
6	Guide pin	12	Cam disc

(2) Using a dial gauge, measure dimension as shown.

a. Rotate drive shaft so that plunge is set at bottom dead center.
b. Securely mount distributor head with screws.

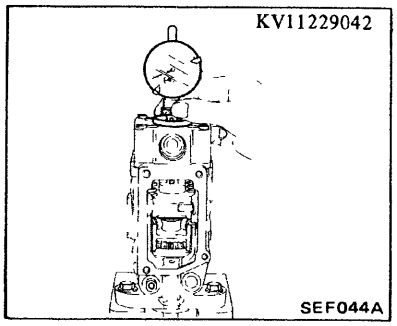

(3) Determine shim to be used by calculating difference between measured (dial gauge reading) value and standard dimension "K", and position that shim on plunger's bottom.

"K" = 3.2 - 3.4 mm (0.126 - 0.134 in)

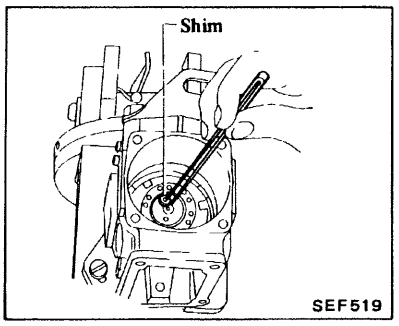

a. When measured value is greater than standard dimension "K", use a thicker shim.
b. After shim has been positioned, measure dimension again to ensure that it is correct.
c. Shims are available in thirteen difference thickness.

Part number	Thickness mm (in)
16884-V0700	1.92 (0.0756)
16884-V0701	2.00 (0.0787)
16884-V0702	2.08 (0.0819)
16884-V0703	2.16 (0.0850)
16884-V0704	2.24 (0.0882)
16884-V0705	2.32 (0.0913)
16884-V0706	2.40 (0.0945)
16884-V0707	2.48 (0.0976)
16884-V0708	2.56 (0.1008)
16884-V0709	2.64 (0.1039)
16884-V0710	2.72 (0.1071)
16884-V0711	2.80 (0.1102)
16884-V0712	2.88 (0.1134)

16. Install spring in top of driving disc, and install cam disc and shim in that order.

Make sure cam disc drive pin and drive shaft key way face governor lever side.

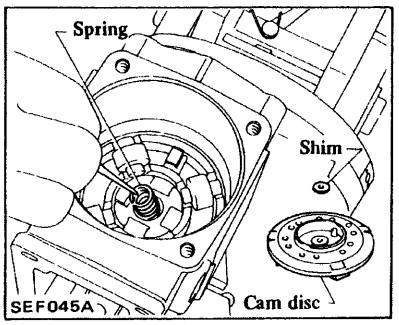

17. Install governor lever.

Avoid pulling on start spring and start idle spring.

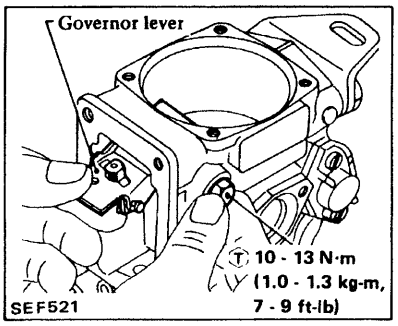

18. Install plunger assembly.

a. Insert ball pin for governor lever into hole in control sleeve (shown by arrow).
b. Make sure control sleeve is installed with its small hole facing spring seat side.

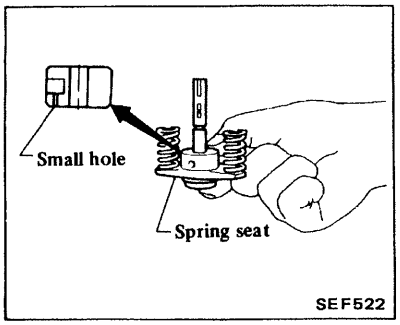

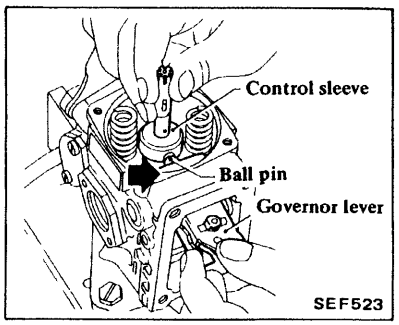

19. Apply a coat of grease to guide pin, shim and spring seat, and attach these parts to distributor head.

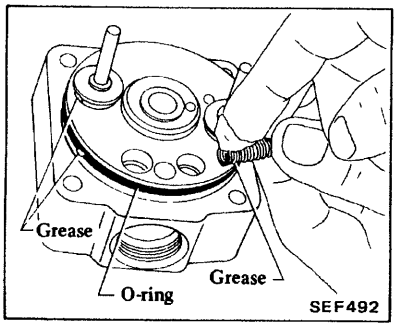

20. Install distributor head.

a. Always face support spring toward governor lever.
b. Be careful not to drop spring.
c. Make sure that ball pin for governor lever is inserted properly into hole in control sleeve.
d. After installing distributor head, make sure that plunger spring is at guide hole in spring seat.

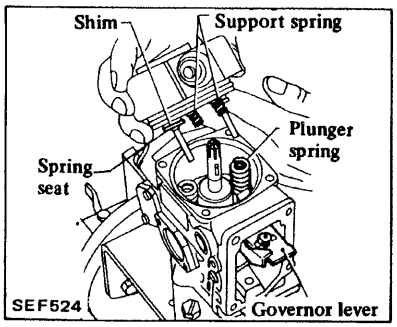

21. Tighten distributor head.

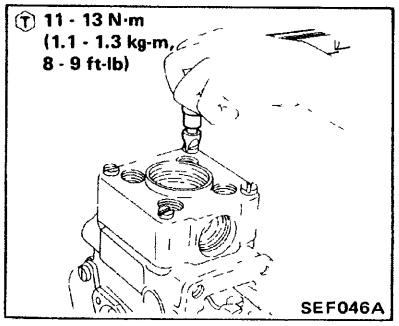

22. Attach flyweight assembly.

When installing governor shaft, be careful not to scratch O-rings.

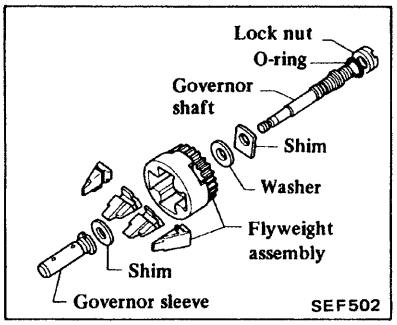

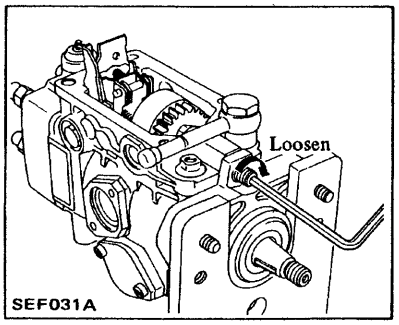

23. Adjust dimension "L", as shown.

"L":
1.5 - 2.0 mm (0.059 - 0.079 in)

a. Tighten lock nut to specified torque.

Ⓣ : **25 - 29 N·m (2.5 - 3.0 kg-m, 18 - 22 ft-lb)**

b. Governor shaft has a left hand thread for injection pumps designed to rotate in "R" direction, and a right hand thread for those rotating in "L" direction.

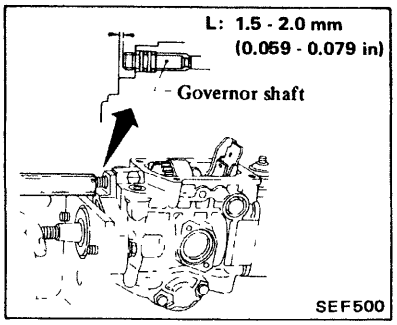

24. Measure axial play of flyweight holder. If it is not within specified range, adjust it by means of shim.

"L":
0.15 - 0.35 mm (0.0059 - 0.0138 in)

Shims are available in five different thickness.

Part number	Thickness mm (in)
19208-V0700	1.05 (0.0413)
19208-V0701	1.25 (0.0492)
19208-V0702	1.45 (0.0571)
19208-V0703	1.65 (0.0650)
19208-V0704	1.85 (0.0728)

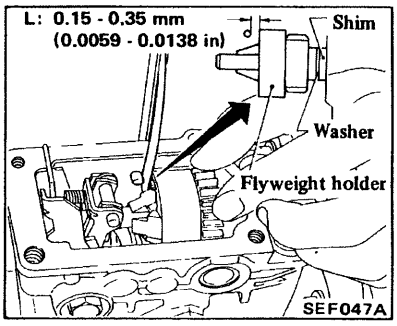

25. Measurement of dimension "MS" (for determining starting amount of fuel injection)

Dimension "MS" is the distance from closing plug to start lever.

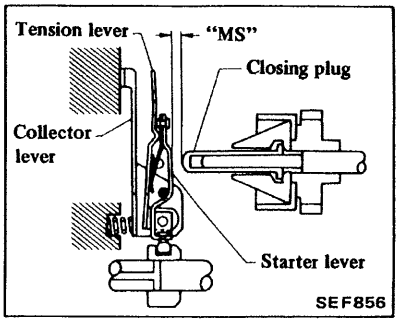

(1) Remove lock nut and governor shaft.

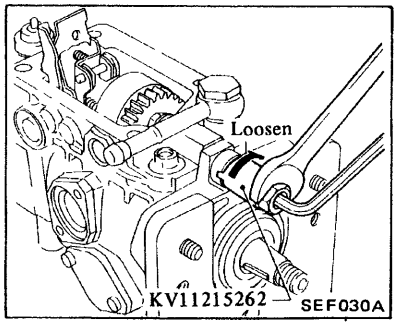

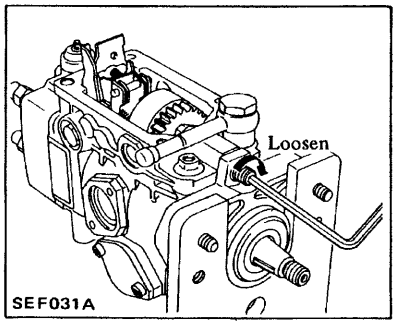

(2) Install Tool at governor shaft position.

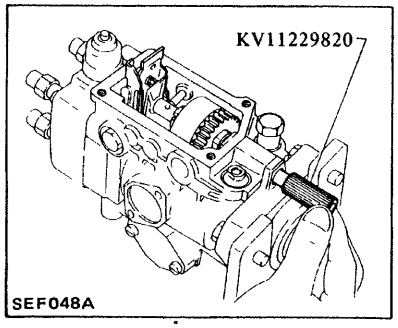

(3) Install Tool (dial gauge) with rod.

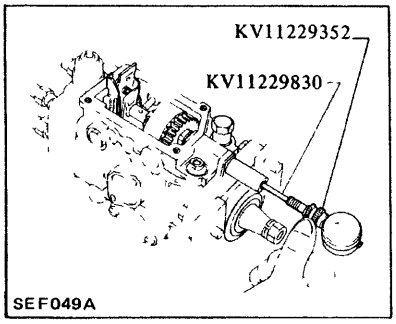

(4) Install Tool (Block gauge) to pump housing.

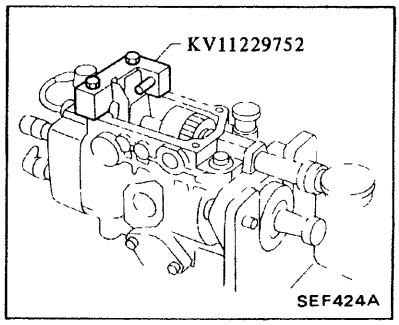

KV11229752 is for pump with high altitude compensator.

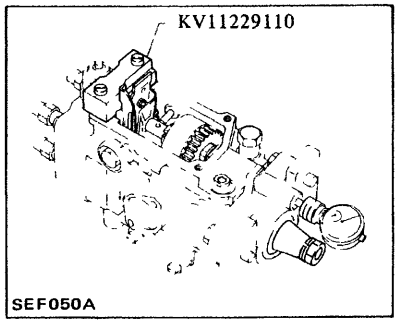

KV11229110 is for pump without high altitude compensator.

(5) Push governor sleeve against flyweight. Hold governor sleeve in that position and set dial gauge to zero.

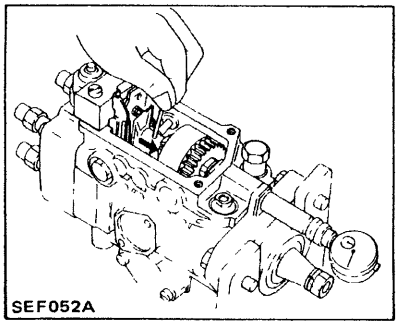

(6) Push tension lever until it comes into contact with stopper pin. Back governor sleeve up until start lever contacts tension lever. At this point, read dial gauge.

MS: Refer to S.D.S.

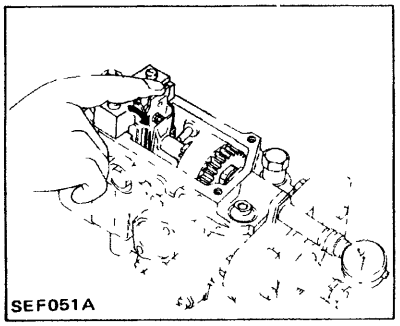

(7) If dial gauge indication is not within this range, replace closing plug and adjust dimension "MS" to that range.

Closing plugs are available in eight different thickness.

Part number	Thickness mm (in)
16268-R8100	8.6 (0.339)
16268-R8101	8.8 (0.346)
16268-R8102	9.0 (0.354)
16268-R8103	9.2 (0.362)
16268-R8104	9.4 (0.370)
16268-R8105	9.6 (0.378)
16268-R8106	9.8 (0.386)
16268-R8107	10.0 (0.394)

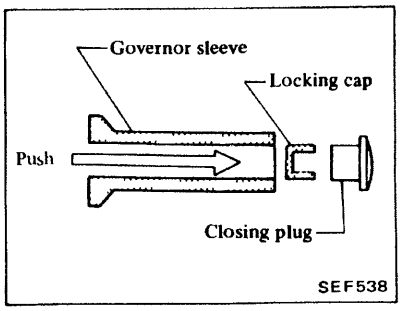

26. Install control lever shaft.

Apply a coat of grease to lever shaft end.

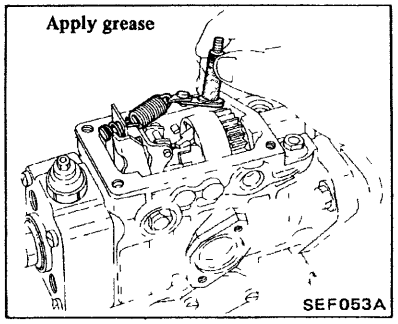

27. Install governor cover.

With high altitude compensator

(1) Position adjusting rod bushing so that its height above upper surface of governor cover is within specified range.

L = 20.5±0.5 mm (0.807±0.020 in)

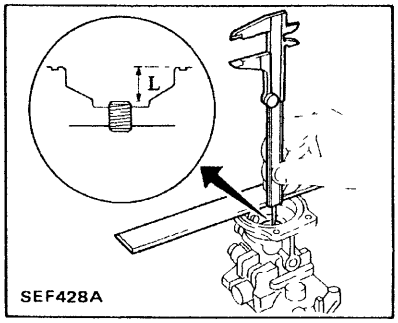

Ensure that holes in adjusting rod bushing and governor cover are aligned properly.

(2) Install adjusting rod.
(3) Install washer and nut.
(4) Tighten nut.

Ⓣ : 25 - 34 N·m (2.5 - 3.5 kg-m, 18 - 25 ft-lb)

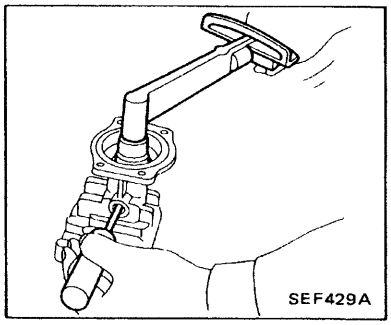

a. Prevent adjusting rod bushing from rotating by locking its nut.
b. If nut and bushing rotate together, bushing height above upper surface of governor cover is insufficient.

(5) Install washer, sleeve and retainer.

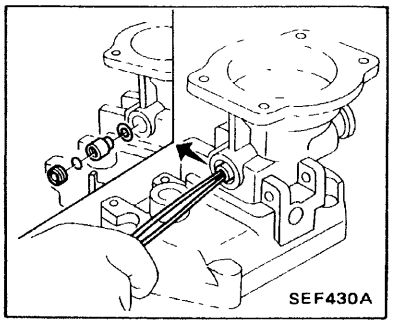

Ⓣ : Retainer
9 - 12 N·m (0.9 - 1.2 kg-m, 6.5 - 8.7 ft-lb)

(6) Install pin.

Ensure that pin moves smoothly when adjusting rod is moved up or down.

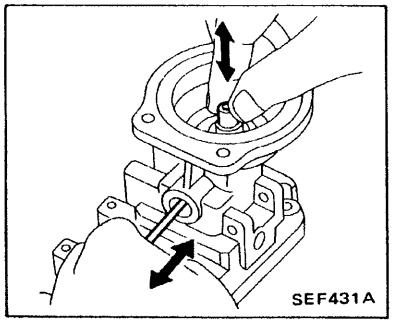

(7) Install lever.

Use a suitable bar as a guide to properly install lever.

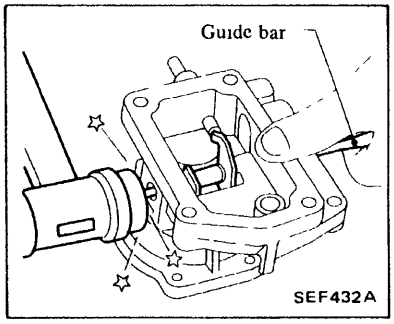

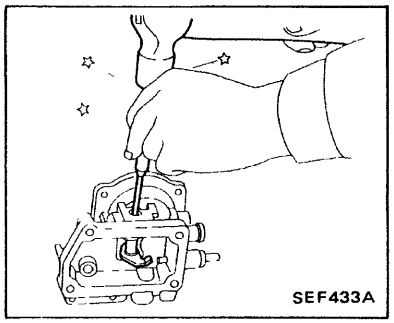

Ensure that lever moves smoothly when adjusting rod is moved up or down.

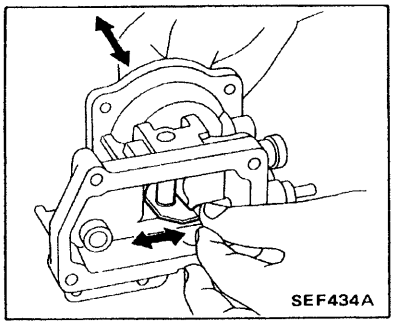

(8) Check clearance between block gauge and lever.
If not within specifications, change the pin.

Clearance:
0.1 mm (0.004 in)

Pin

Part Number	Length mm (in)
19276-W3300	24.6 (0.969)
19276-W3301	24.8 (0.976)
19276-W3302	25.0 (0.984)
19276-W3303	25.2 (0.992)
19276-W3304	25.4 (1.000)

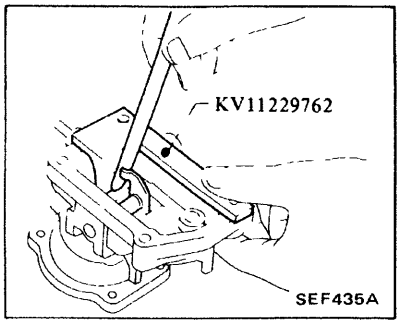

(9) Install governor cover.

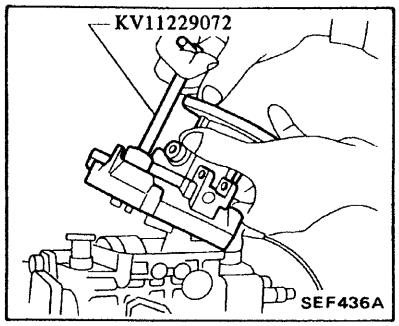

(10) Install control lever.

Align aligning mark of the control lever and control lever shaft.

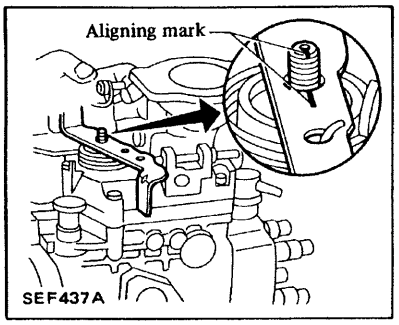

(11) Install spring seat, spring and E-ring.

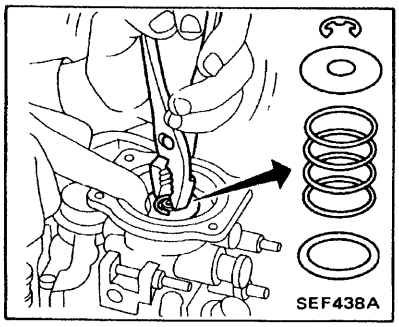

(12) Install adjusting shim and bellows.

(13) Install compensator cover.

Without high altitude compensator

(1) Install pump governor cover.

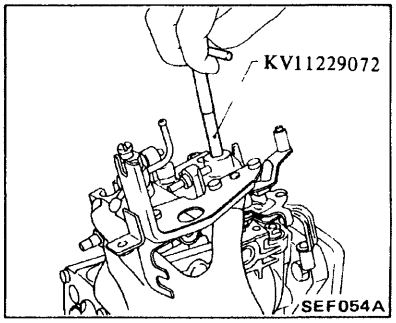

(2) Install speed control lever assembly.

Align aligning marks of speed control lever and control lever shaft.

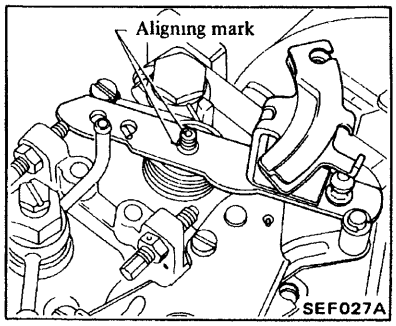

28. Install plug with new O-ring.

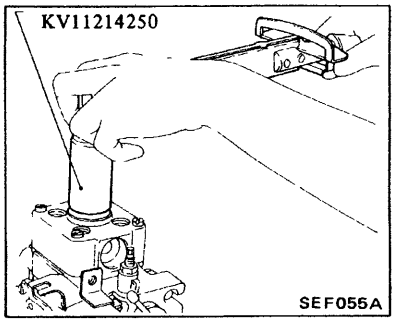

29. Install fuel-cut solenoid valve and plug.

Always replace plugs with new ones.

31. Install delivery valve.

a. Always use new washers.

b. Make sure that delivery valve is reinstalled in its original position.

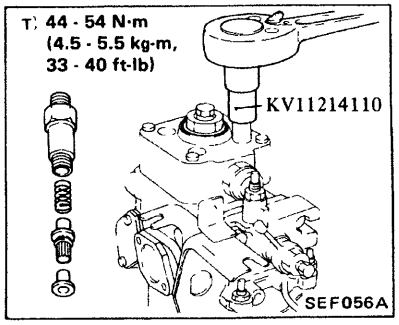

TESTING OF INJECTION PUMP

PREPARATION

Injection pump test conditions

Nozzle	KV11257800
Nozzle holder	KV11257802
Nozzle starting pressure kPa (bar, kg/cm², psi)	14,711 - 15,201 (147.1 - 152.0, 150 - 155, 2,133 - 2,204)
Nozzle tube Inner dia. x outer dia. x length mm (in)	KV11257805 2.0 x 6.0 x 840 (0.079 x 0.236 x 33.07)
Fuel feed pressure kPa (bar, kg/cm², psi)	20 (0.20, 0.2, 2.8)
Fuel (test oil)	ISO 4113 or SAE Standard Test Oil (SAE J967d)
Fuel temperature °C (°F)	45 - 50 (113 - 122)
Rotating direction	Right (observed from the drive shaft)
Injection sequence	SD 4-cylinder 1-3-4-2

1. Prepare necessary service tools.

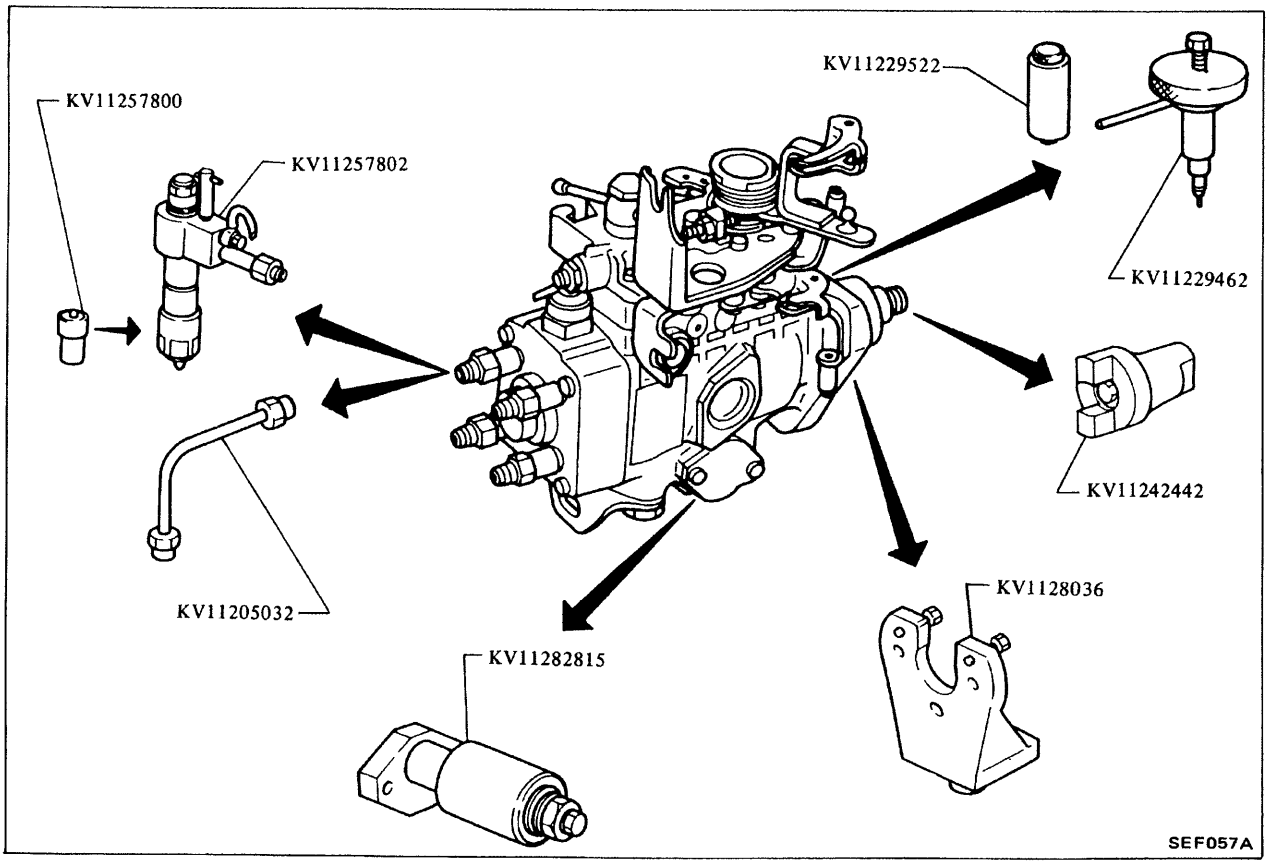

2. Pour test oil into fuel injection pump.

Test oil should be ISO 4113, SAE Standard Test Oil (SAE J967d) or its equivalent.

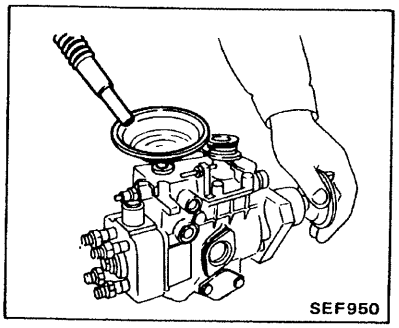

3. Install fuel injection pump to pump tester.
4. Connect necessary piping.

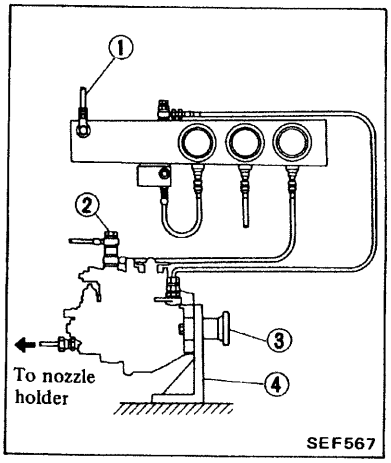

1 Fuel supply inlet from pump tester
2 Overflow valve
3 Coupling
4 Fixing stand

5. Make sure that governor shaft is properly installed.

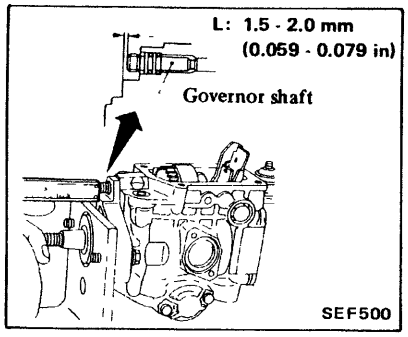

6. Run in fuel injection pump as follows:
(1) Maintain test oil in tank to 45 to 50°C (113 to 122°F).
(2) Set control lever at "full load" using a spring.

Set maximum speed adjusting screw in position shown, by turning counter-clockwise.

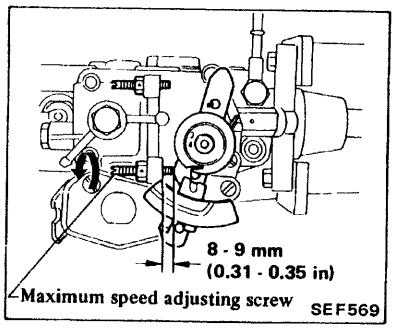

(3) Furnish specified voltage of 12 volts to fuel-cut solenoid valve to activate it.
(4) Rotate fuel injection pump by hand to see if it moves smoothly.
(5) Rotate fuel injection pump at 300 rpm to make sure that all air inside pump chamber is discharged through overflow valve.
(6) Set feed oil pressure at 20 kPa (0.20 bar, 0.2 kg/cm², 2.8 psi).
(7) Run in fuel injection pump by rotating it at 1,000 rpm for ten minutes.

If fuel leakage, fuel injection failure or unusual noise is noticed, immediately halt pump tester operation and check fuel injection pump for abnormalities.

ADJUSTMENT

Preadjust full-load delivery

If high altitude compensator is equipped, remove high altitude compensator cover, bellows and adjusting shim.

1. Set control lever at "full-load" using a spring.

Set maximum speed adjusting screw in position shown, by turning counter-clockwise. Refer to step 6–(2) in Preparation.

2. Furnish specified voltage of 12 volts to activate fuel-cut solenoid valve.
3. Rotate fuel injection pump at 1,000 rpm, and measure amount of fuel injection.

Standard fuel injection:
Refer to S.D.S.

4. If fuel injection is less than standard, adjust it with full-load adjusting screw.

Turn adjusting screw clockwise to increase fuel injection.

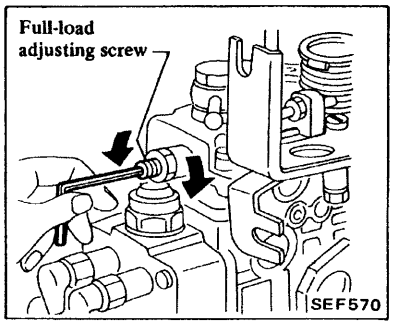

Adjustment of feed pump pressure

1. Repeat steps 1 and 2 outlined under heading "Preadjust Full-Load Delivery".
2. Measure feed pump pressure at specified fuel injection pump rpm.

Feed pump pressure:
Refer to S.D.S.

a. When measured pressure is lower than specifications.

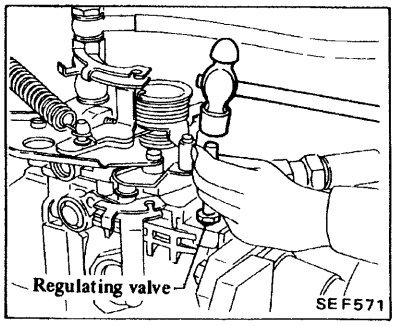

Push in plug that is driven into regulating valve body.

Be careful not to push plug in too far.

b. When measured pressure is higher than specifications.

Remove regulating valve from fuel injection pump, and disassemble regulating valve using KV11229462.

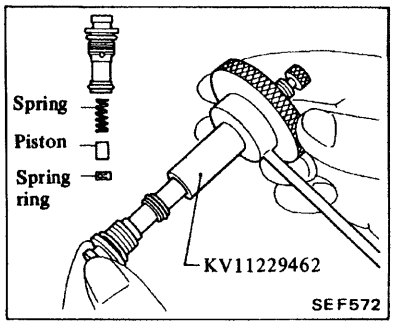

Drive plug out until it is flush with end face of regulating valve.

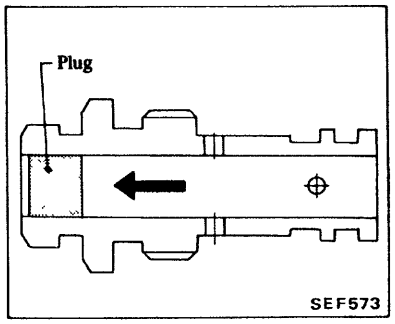

Install spring, piston and spring ring, in that order, to regulating valve.

Make sure that spring ring is flush with end face or regulating valve body when it is pushed in.

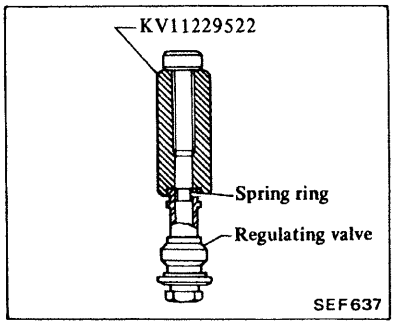

Attach regulating valve to fuel injection pump.

Ⓣ : Regulating valve
8 - 9 N·m
(0.8 - 0.9 kg-m,
5.8 - 6.5 ft-lb)

Adjust supply pump pressure to specifications. Refer to step 2-a.

Adjustment of speed timer

1. Repeat steps 1 and 2 outlined under heading "Preadjust Full-Load Delivery".
2. Remove cover from high pressure side (side without spring) of timer, **and attach service tool KV11282815 to that side.**

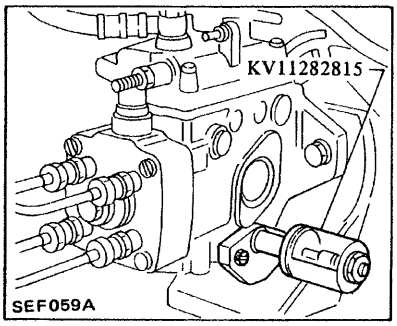

3. Measure timer piston strokes at specified fuel injection pump rpm.

Timer piston stroke:
Refer to S.D.S.

4. If timer piston stroke is not within specified range, remove cover from low pressure side of timer and adjust piston stroke by adding shim(s).

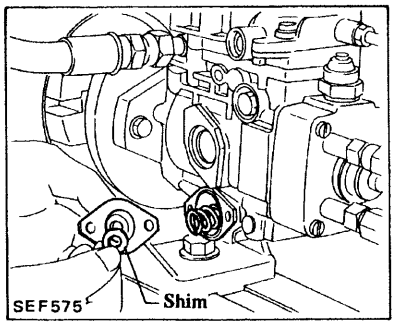

a. Shims (service parts)

Parts number	Thickness mm (in)
16880-V0700	0.6 (0.024)
16880-V0701	0.7 (0.028)
16880-V0702	0.9 (0.035)
16880-V0703	1.0 (0.039)
16880-V0704	1.2 (0.047)

b. Make sure that at least one shim is used on each side of timer spring.

Adjustment of fuel injection under full-load

1. Set control lever at "full-load" using a spring.
2. Furnish specified voltage of 12 volts to activate fuel cut solenoid valve.
3. Measure fuel injection at each specified fuel injection pump rpm.

Standard fuel injection:
Refer to S.D.S.

4. If fuel injection is not within standard range, adjust it using full-load adjusting screw.

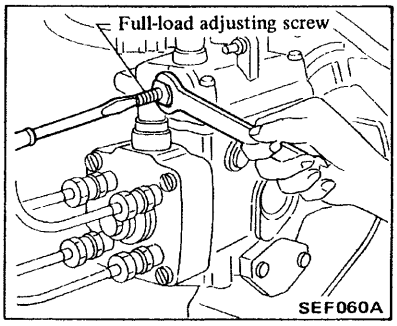

Adjustment of fuel injection during idle

1. Pull spring until control lever comes into contact with idle speed adjusting screw.
2. Furnish specified voltage of 12 volts to activate fuel cut solenoid valve.
3. Measure fuel injection at specified fuel injection pump rpm.

Standard fuel injection:
Refer to S.D.S.

4. If fuel injection is not within specified range, adjust using idle speed adjusting screw.

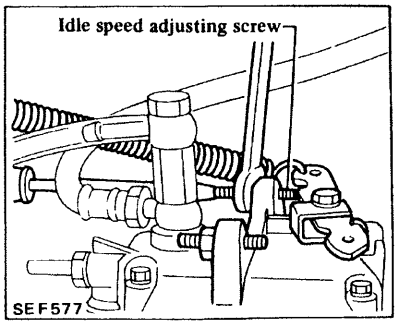

a. Tightening this screw will increase fuel injection amount.
b. Make sure that control lever angle is set at 21 to 29° range.
If control lever angle is not within specified range, adjust it by re-positioning control lever on control shaft. (One serration pitch: 15°)
After control lever has been re-positioned, be sure to measure amount of fuel injection at idle speed again.

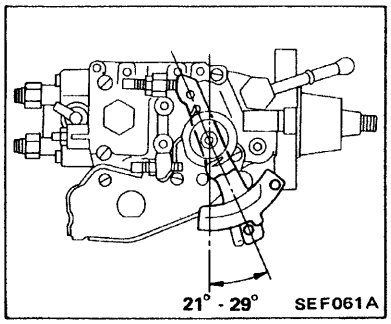

Adjustment of fuel injection during start

1. Set control lever at "full load" by pulling spring.
2. Furnish specified voltage of 12 volts to activate fuel-cut solenoid valve.
3. Measure fuel injection at specified fuel injection pump rpm.

Standard fuel injection:
Refer to S.D.S.

4. If fuel injection is lower than standard, check "MS" dimension. Refer to step 25 for Injection Pump Assembly.

Adjustment of fuel injection at max. pump rpm

1. Set control lever at "full load" by pulling spring.
2. Furnish specified voltage of 12 volts to activate fuel-cut solenoid valve.
3. Measure fuel injection at specified fuel injection rpm.

Standard injection:
Refer to S.D.S.

4. If fuel injection is not within standard range, adjust using max. speed adjusting screw.

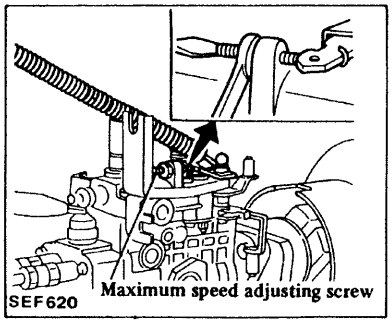

a. Tightening screw will increase fuel injection.
b. Make sure that control lever angle is within the specified range.

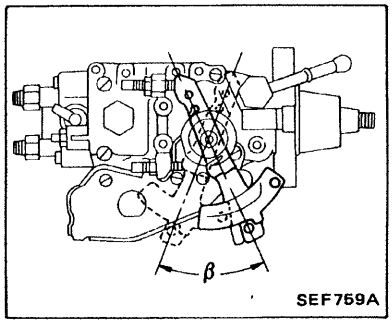

Engine	Pump No.	Lever angle "β"
SD23	104740-4260 104740-4300	37° - 47°
SD25	104740-4160	
SD23	104740-4230 104740-4240 104740-4310 104740-4360 104740-4370 104740-4380	41° - 51°
SD22	104749-4110 104749-4150	36° - 49°
SD25	104740-4390 104740-4400 104740-4410	39.5° - 49.5°

ADJUSTMENT OF HIGH ALTITUDE COMPENSATOR

1. Install bellows and adjusting shim.
2. Install a vacuum pump.

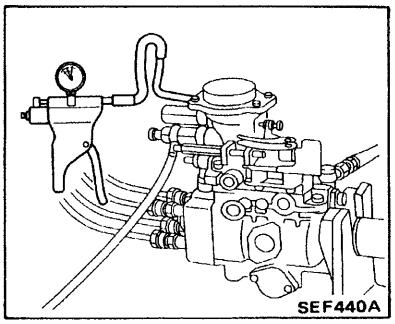

Ensure that no vacuum leakage is present.

3. Measure fuel injection volume.

1) Below 2,000 m (6,562 ft)

Altitude m (ft) / Item	0 (0)	250 (820)	500 (1,641)	750 (2,461)	1,000 (3,281)	1,250 (4,101)	1,500 (4,922)	1,750 (5,742)	2,000 (6,562)
Applied vacuum kPa (bar, mmHg, inHg)	21.2 - 22.5 (212 - 225, 159 - 169, 6.26 - 6.65)	18.3 - 19.6 (183 - 196, 137 - 147, 5.39 - 5.79)	15.3 - 16.7 (153 - 167, 115 - 125, 4.53 - 4.92)	12.4 - 13.7 (124 - 137, 93 - 103, 3.66 - 4.06)	9.5 - 10.8 (95 - 108, 71 - 81, 2.80 - 3.19)	6.9 - 8.3 (69 - 83, 52 - 62, 2.05 - 2.44)	4.4 - 5.7 (44 - 57, 33 - 43, 1.30 - 1.69)	1.9 - 3.2 (19 - 32, 14 - 24, 0.55 - 0.94)	0 (0, 0, 0)
Fuel injection pump rpm	1,000								
Standard fuel injection mℓ (Imp fl oz)/ 1,000 stroke	29.4 - 33.4 (1.03 - 1.18)								

2) Above 2,000 m (6,562 ft)

Altitude m (ft) / Item	2,250 (7,382)	2,500 (8,203)	2,750 (9,023)	3,000 (9,843)	3,250 (10,663)	3,500 (11,484)	3,750 (12,304)	4,000 (13,124)
Fuel injection pump rpm	1,000							
Standard fuel injection mℓ (Imp fl oz)/1,000 stroke	28.4 –32.5 (1.00 - 1.14)	27.4 –31.5 (0.96 - 1.11)	26.5 –30.5 (0.93 - 1.07)	25.5 –29.6 (0.90 - 1.04)	24.5 –28.6 (0.86 - 1.01)	23.6 –27.6 (0.83 - 0.97)	22.7 –26.7 (0.80 - 0.94)	21.7 –25.7 (0.76 - 0.90)

4. If fuel injection is not within the standard range, increase or decrease the adjusting shims.

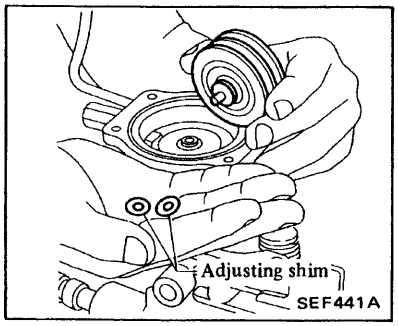

Shims (Service parts)

Part number	Thickness mm (in)
19275-W3300	0.2 (0.008)
19275-W3301	0.3 (0.012)
19275-W3302	0.4 (0.016)
19275-W3303	0.6 (0.024)
19275-W3304	0.7 (0.028)

3. Measure fuel overflow at specified fuel injection rpm.

Fuel overflow:
Refer to S.D.S.

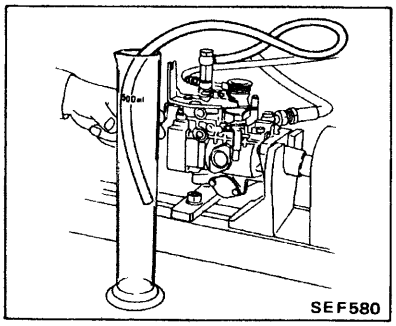

Measurement of overflow amount

1. Set control lever at "full load" by pulling spring.

2. Furnish specified voltage of 12 volts to activate fuel-cut solenoid valve.

Operation check of fuel-cut solenoid valve

When engine is idling and fuel-cut solenoid valve current is OFF, be sure there is no injection. This check has to be done for approx. 5 seconds.

SERVICE DATA AND SPECIFICATIONS

TABLE OF MODELS AND CORRESPONDING PUMP NUMBERS

Model	Engine	Part number	Pump number
E23	SD22	16700-R8114 16700-R8114 16700-R8114 16700-R8118 16700-R8118 16700-R8118	104749-4040 104749-4110 104749-4111 104949-4080 104949-4150 104949-4151
	SD23	16700-R8302 16700-R8306 16700-R8307 16700-R8309	104740-4310 104740-4230 104740-4240 104740-4260
F22	SD25	16700-T8212 16700-T8270	104740-4160 104740-4270
720	SD23	16700-09W01 16700-09W02 16700-09W03	104740-4360 104740-4370 104740-4380
	SD25	16700-54W02 16700-54W03 16700-54W04	104740-4390 104740-4400 104740-4410

INSPECTION AND ADJUSTMENT

Installation of injection pump

Engine	Plunger lift mm (in)
SD22	1.03±0.02 (0.0406±0.0008) *0.95±0.02 (0.0374±0.0008)
SD23	0.94±0.02 (0.0370±0.0008)
SD25	0.89±0.02 (0.0350±0.0008)

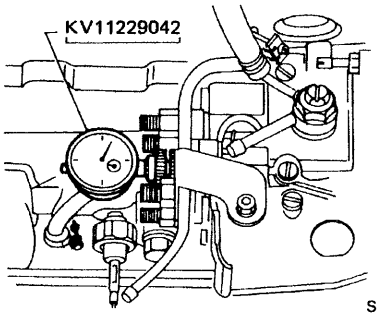

*Applies to pump No. 104749-4040 and 104749-4080

Use of adjustment value and adjusting shim when installing injection pump

Dimension "KF" mm (in)	5.7 - 5.9 (0.224 - 0.232)

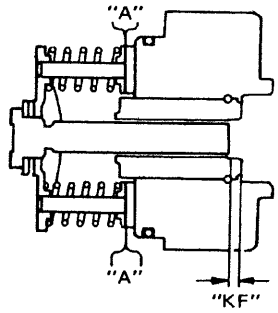

Adjusting shim ("A" position)

Part number	Thickness mm (in)
16882-V0700	0.5 (0.020)
16882-V0701	0.8 (0.031)
16882-V0702	1.0 (0.039)
16882-V0703	1.2 (0.047)
16882-V0704	1.5 (0.059)
16882-V0705	1.8 (0.071)
16882-V0706	2.0 (0.079)

Dimension "K" mm (in)	3.2 - 3.4 (0.126 - 0.134)

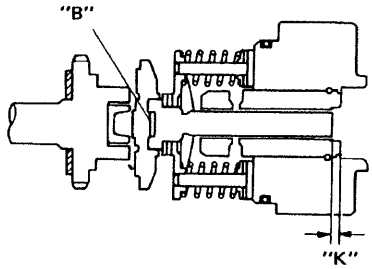

SEF639

Adjusting shim ("B" position)

Part number	Thickness mm (in)
16884-V0700	1.92 (0.0756)
16884-V0701	2.00 (0.0787)
16884-V0702	2.08 (0.0819)
16884-V0703	2.16 (0.0850)
16884-V0704	2.24 (0.0882)
16884-V0705	2.32 (0.0913)
16884-V0706	2.40 (0.0945)
16884-V0707	2.48 (0.0976)
16884-V0708	2.56 (0.1008)
16884-V0709	2.64 (0.1039)
16884-V0710	2.72 (0.1071)
16884-V0711	2.80 (0.1102)
16884-V0712	2.88 (0.1134)

Axial play of flyweight holder "L" mm (in)	0.15 - 0.35 (0.0059 - 0.0138)

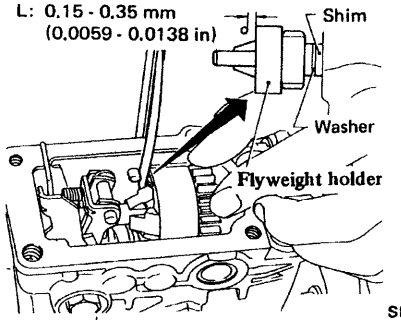

SEF047A

Adjusting shim

Part number	Thickness mm (in)
19208-V0700	1.05 (0.0413)
19208-V0701	1.25 (0.0492)
19208-V0702	1.45 (0.0571)
19208-V0703	1.65 (0.0650)
19208-V0704	1.85 (0.0728)

Dimension "MS" mm (in)	
SD22 and SD23	1.4 - 1.6 (0.055 - 0.063)
SD25	1.1 - 1.3 (0.043 - 0.051)

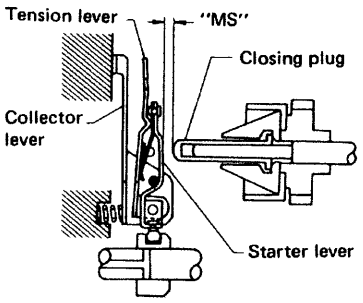

SEF856

Adjusting closing plug

Part number	Thickness mm (in)
16268-R8100	8.6 (0.339)
16268-R8101	8.8 (0.346)
16268-R8102	9.0 (0.354)
16268-R8103	9.2 (0.362)
16268-R8104	9.4 (0.370)
16268-R8105	9.6 (0.378)
16268-R8106	9.8 (0.386)
16268-R8107	10.0 (0.394)

Dimension "L" mm (in)	1.5 - 2.0 (0.059 - 0.079)

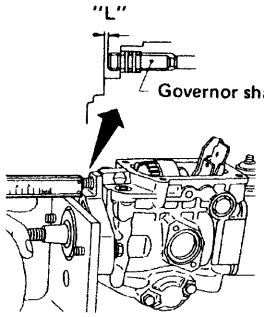

Adjustment value on injection pump tester

All adjustments or settings except adjustment of high altitude compensator are made by removing high altitude compensator cover, bellows and adjusting shim. (equipped with high altitude compensator)

Feed pump pressure

Engine	Pump No.	Fuel injection pump rpm	Specified pressure kPa (bar, kg/cm², psi)
SD22	104749-4040 104749-4080 104749-4110 104749-4111 104749-4150 104749-4151	500	196 - 255 (1.96 - 2.55, 2.0 - 2.6, 28 - 37)
		1,000	363 - 422 (3.63 - 4.22, 3.7 - 4.3, 53 - 61)
		1,900	647 - 706 (6.47 - 7.06, 6.6 - 7.2, 94 - 102)
SD23	104740-4230 104740-4240 104740-4310 104740-4360 104740-4370 104740-4380	600	294 - 353 (2.94 - 3.53, 3.0 - 3.6, 43 - 51)
		1,700	549 - 608 (5.49 - 6.08, 5.6 - 6.2, 80 - 88) *559 - 618 (5.59 - 6.18, 5.7 - 6.3, 81 - 90)
		2,150	667 - 726 (6.67 - 7.26, 6.8 - 7.4, 97 - 105)
	104740-4260	600	314 - 373 (3.14 - 3.73, 3.2 - 3.8, 46 - 54)
		1,700	559 - 618 (5.59 - 6.18, 5.7 - 6.3, 81 - 90)
		2,150	637 - 696 (6.37 - 6.96, 6.5 - 7.1, 92 - 101)
SD25	104740-4160 104740-4390	600	284 - 343 (2.84 - 3.43, 2.9 - 3.5, 41 - 50)
		1,000	382 - 441 (3.82 - 4.41, 3.9 - 4.5, 55 - 64)
		2,100	647 - 706 (6.47 - 7.06, 6.6 - 7.2, 94 - 102)
	104740-4270 104740-4400 104740-4410	600	304 - 363 (3.04 - 3.63, 3.1 - 3.7, 44 - 53)
		1,000	392 - 451 (3.92 - 4.51, 4.0 - 4.6, 57 - 65)
		2,100	647 - 706 (6.47 - 7.06, 6.6 - 7.2, 94 - 102)

*Applies to pump No. 104740-4370 and 104740-4380

Speed timer

Engine	Pump No.	Fuel injection pump rpm	Timer piston stroke mm (in)
SD22	104749-4040 104749-4080	1,000	2.0 - 2.6 (0.079 - 0.102)
		1,400	3.5 - 4.7 (0.138 - 0.185)
		1,900	6.1 - 7.0 (0.240 - 0.276) 6.2 - 7.1* (0.244 - 0.280)
	104749-4110 104749-4111 104749-4150 104749-4151	1,000	2.0 - 2.6 (0.079 - 0.102)
		1,400	3.6 - 4.8 (0.142 - 0.189)
		1,900	6.2 - 7.1 (0.244 - 0.280)
SD23	104740-4230 104740-4240 104740-4310 104740-4360 104740-4370 104740-4380	1,000	1.4 - 2.6 (0.055 - 0.102)
		1,700	4.4 - 5.0 (0.173 - 0.197)
		2,150	6.1 - 7.1 (0.240 - 0.280)
	104740-4260	1,000	1.5 - 2.7 (0.059 - 0.106)
		1,700	4.3 - 4.9 (0.169 - 0.193)
		2,150	5.2 - 6.2 (0.205 - 0.244)

Engine	Pump No.	Fuel injection pump rpm	Timer piston stroke mm (in)
SD25	104740-4160 104740-4270 104740-4390 104740-4400 104740-4410	1,000	1.4 - 2.0 (0.055 - 0.079)
		1,400	3.2 - 4.4 (0.126 - 0.173)
		2,100	6.9 - 7.9 (0.272 - 0.311)

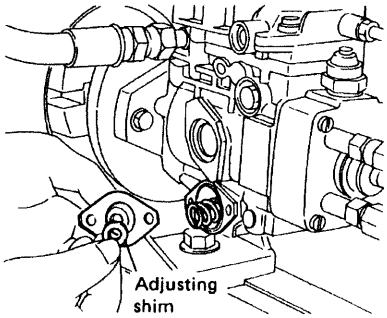

SEF575

Adjusting shim Part number	Thickness mm (in)
16880-V0700	0.6 (0.024)
16880-V0701	0.7 (0.028)
16880-V0702	0.9 (0.035)
16880-V0703	1.0 (0.039)
16880-V0704	1.2 (0.047)

*: Applies to pump No. 104749-4080

Fuel injection quantity

Engine	Pump No.	Setting condition of fuel injection pump	Fuel injection pump rpm	Standard fuel injection mℓ (Imp fl oz)/1,000 stroke
SD22	104749-4040	Start	100	More than 47 (1.65)
		Idle	300	5.3 - 9.3 (0.19 - 0.33)
			400	Less than 3 (0.11)
		Full-load	600	30 - 34 (1.06 - 1.20)
			1,000	34.1 - 36.1 (1.20 - 1.27)
			2,000	31.3 - 35.3 (1.10 - 1.24)
		Max. pump speed	2,100	18 - 24 (0.63 - 0.84)
			2,300	Less than 5 (0.18)
		Fuel overflow	42 - 85 mℓ (1.48 - 2.99 Imp fl oz)/10 sec. at 1,000 rpm	
	104749-4080	Start	100	More than 51 (1.80)
		Idle	300	4.3 - 8.3 (0.15 - 0.29)
			400	Less than 3 (0.11)
		Full-load	600	25.6 - 29.6 (0.90 - 1.04)
			1,000	29.7 - 31.7 (1.05 - 1.12)
			2,000	28.3 - 32.5 (1.00 - 1.14)
		Max. pump speed	2,100	17.6 - 24.6 (0.62 - 0.87)
			2,300	Less than 5 (0.18)
		Fuel overflow	41 - 85 mℓ (1.44 - 2.99 Imp fl oz)/10 sec. at 1,000 rpm	
	104749-4110 104749-4111	Start	100	More than 49 (1.72)
		Idle	300	5 - 9 (0.18 - 0.32)
			400	Less than 3 (0.11)
		Full-load	600	28.4 - 32.4 (1.00 1.14)
			1,000	32.5 - 34.5 (1.14 - 1.21)
			2,000	31.5 - 35.5 (1.11 - 1.25)
		Max. pump speed	2,100	18 - 24 (0.63 - 0.84)
			2,300	Less than 5 (0.18)
		Fuel overflow	42 - 85 mℓ (1.48 - 2.99 Imp fl oz)/10 sec. at 1,000 rpm	
	104749-4150 104749-4151	Start	100	More than 42 (1.48)
		Idle	300	4.3 - 8.3 (0.15 - 0.29)
			400	Less than 3 (0.11)
		Full-load	600	23.8 - 27.8 (0.84 - 0.98)
			1,000	28.4 - 30.4 (1.00 - 1.07)
			2,000	28.5 - 32.7 (1.00 - 1.15)
		Max. pump speed	2,100	17.5 - 24.5 (0.62 - 0.86)
			2,300	Less than 5 (0.18)
		Fuel overflow	42 - 85 mℓ (1.48 - 2.99 Imp fl oz)/10 sec. at 1,000 rpm	

INJECTION PUMP ASSEMBLY (Diesel Kiki-Bosch VE-type)

Engine	Pump No.	Setting condition of fuel injection pump	Fuel injection pump rpm	Standard fuel injection mℓ (Imp fl oz)/1,000 stroke
SD23	104740-4230 104740-4240 104740-4310	Start	100	55 - 90 (1.94 - 3.17)
		Idle	300 350	4.3 - 8.3 (0.15 - 0.29) Less than 3 (0.11)
		Full-load	600 1,000 2,150	29.3 - 33.3 (1.03 - 1.17) 35.1 - 37.1 (1.24 - 1.31) 30.5 - 34.7 (1.07 - 1.22)
		Max. pump speed	2,300 2,450	14.2 - 21.2 (0.50 - 0.75) Less than 5 (0.18)
		Fuel overflow	41 - 85 mℓ (1.44 - 2.99 Imp fl oz)/10 sec. at 1,000 rpm 8 - 85 mℓ (0.28 - 2.99 Imp fl oz)/10 sec. at 1,000 rpm *1	
	104740-4260	Start	100	55 - 90 (1.94 - 3.17)
		Idle	300 350	4.3 - 8.3 (0.15 - 0.29) Less than 3 (0.11)
		Full-load	600 1,000 2,000	29.3 - 33.3 (1.03 - 1.17) 35.1 - 37.1 (1.24 - 1.31) 30.5 - 34.7 (1.07 - 1.22)
		Max. pump speed	2,300 2,450	10.1 - 15.1 (0.36 - 0.53) Less than 5 (0.18)
		Fuel overflow	8 - 52 mℓ (0.28 - 1.83 Imp fl oz)/10 sec. at 1,000 rpm	
	104740-4360 104740-4370 104740-4380	Start	100	55 - 90 (1.94 - 3.17)
		Idle	300 350	4.3 - 8.3 (0.15 - 0.29) Less than 3 (0.11)
		Full-load	600 1,000 2,150	32.2 - 36.2 (1.13 - 1.27) 37.1 - 39.1 (1.31 - 1.38) 32.5 - 36.7 (1.14 - 1.29)
		Max. pump speed	2,300 2,450	14.2 - 21.2 (0.50 - 0.75) Less than 5 (0.18)
		Fuel overflow	8 - 52 mℓ (0.28 - 1.83 Imp fl oz)/10 sec. at 1,000 rpm 41 - 85 mℓ (1.44 - 2.99 Imp fl oz)/10 sec. at 1,000 rpm *2	
SD25	104740-4160 104740-4270	Start	100	45 - 80 (1.58 - 2.82)
		Idle	300 350	4.5 - 8.5 (0.16 - 0.30) Less than 3 (0.11)
		Full-load	600 1,000 2,100	31.2 - 35.2 (1.10 - 1.24) 37.4 - 39.4 (1.32 - 1.39) 32.9 - 37.1 (1.16 - 1.31)
		Max. pump speed	2,250 2,350	11.2 - 18.2 (0.39 - 0.64) Less than 5 (0.18)
		Fuel overflow	42 - 85 mℓ (1.48 - 2.99 Imp fl oz)/10 sec. at 1,000 rpm 8 - 52 mℓ (0.28 - 1.83 Imp fl oz)/10 sec. at 1,000 rpm *3	
	104740-4390 104740-4400 104740-4410	Start	100	50 - 85 (1.76 - 2.99)
		Idle	300 350	4.5 - 8.5 (0.16 - 0.30) Less than 3 (0.11)
		Fuel-load	600 1,000 2,100	35.7 - 39.7 (1.26 - 1.40) 40.1 - 42.1 (1.41 - 1.48) 34.1 - 38.3 (1.20 - 1.34)
		Max. pump speed	2,250 2,350	11.2 - 18.2 (0.39 - 0.64) Less than 5 (0.18)
		Fuel overflow	8 - 52 mℓ (0.28 - 1.83 Imp fl oz)/10 sec. at 1,000 rpm 42 - 85 mℓ (1.48 - 2.99 Imp fl oz)/10 sec. at 1,000 rpm *4	

*1: Applies to pump No. 104740-4240
*2: Applies to pump No. 104740-4360
*3: Applies to pump No. 104740-4270
*4: Applies to pump No. 104740-4390

TIGHTENING TORQUE

Unit		N-m	kg-m	ft-lb
Distributor head to pump housing		11 - 13	1.1 - 1.3	8 - 9
Plug to distributor head		59 - 78	6.0 - 8.0	43 - 58
Delivery valve to distributor head		44 - 54	4.5 - 5.5	33 - 40
Pivot pin to pump housing		10 - 13	1.0 - 1.3	7 - 9
Regulating valve to pump housing		8 - 9	0.8 - 0.9	5.8 - 6.5
Control shaft to control lever		7 - 10	0.7 - 1.0	5.1 - 7.2
Injection pump drive gear nut		59 - 69	6.0 - 7.0	43 - 51
Injection nozzle to engine	*1	59 - 69	6.0 - 7.0	43 - 51
	*2	69 - 78	7.0 - 8.0	51 - 58
Injection tube flare nut		34 - 44	3.5 - 4.5	25 - 33
Spill tube nut		39 - 49	4.0 - 5.0	29 - 36
Feed pump cover to pump housing		2 - 3	0.2 - 0.3	1.4 - 2.2
Speed timer cover to pump housing		6 - 8	0.6 - 0.8	4.3 - 5.8
Governer shaft lock nut		25 - 29	2.5 - 3.0	18 - 22
Overflow valve		20 - 25	2.0 - 2.5	14 - 18
Maximum and idle speed adjusting screw lock nut		6 - 9	0.6 - 0.9	4.3 - 6.5
Full-load adjusting screw lock nut		7 - 9	0.7 - 0.9	5.1 - 6.5
Fuel-cut solenoid valve		20 - 25	2.0 - 2.5	14 - 18
Plug bolt		8 - 10	0.8 - 1.0	5.8 - 7.2

*1: Part No. of injection nozzle
16600-90060, 16600-36W00, 16600-T9000

*2: Part No. of injection nozzle
16600-37502, 16600-90012, 16600-90019, 16600-J5571, 16600-T3401, 16600-T3470, 16600-T6200, 16600-T6201, 16600-Y8400, 16600-Y8401

SPECIAL SERVICE TOOLS

Adjusting device on car

Tool number	Tool name
KV11229352 ① KV11229350 ② KV11229360 ③ KV11229370 ④ KV11254410	Measuring device (Set length of plunger spring) Holder Nut Pin Dial gauge 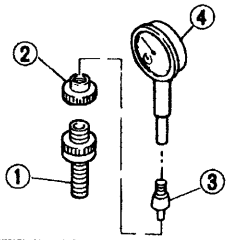

Disassembling and assembling tools

KV11294005 ① KV11244260	Universal vice assembly Injection pump attaching plate 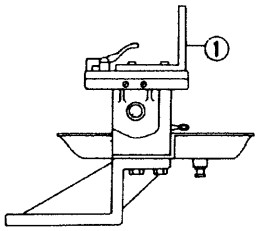
KV11229072	Insert device 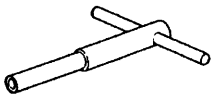
KV11214110	Socket wrench for delivery valve
KV11214270	Socket wrench for governor pivot bolt 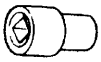
KV11214260	Socket wrench for regulating valve 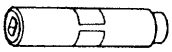
KV11214250	Socket wrench for distributor head plug 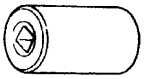
KV11215262	Governor shaft adjusting device 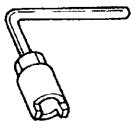

Tool number	Tool name
KV11229540	Feed pump holder
KV11229852 ① KV11229110 ② KV11229820 ③ KV11229830	"MS" measuring device set Block gauge Dummy shaft Rod
KV11229752	Block gauge (For high altitude compensator)
KV11229762	Block gauge (For high altitude compensator)
KV11229042	"K" & "KF" measuring device

Adjusting device on pump tester

KV11281036	Fixing stand
KV11242442	Coupling
KV11282815	Measuring device (Timer advance angle)

Tool number	Tool name
KV11205032	Injection pipe [840 mm (33.07 in)]
KV11229462	Extractor (Disassembling of regulating valve)
KV11229522	Insert device (Assembling of regulating valve)
KV11257802	Nozzle holder (Bosch type EF8511-9A)
KV11257800	Nozzle (Bosch type DN 12SD12T)

INJECTION PUMP ASSEMBLY (C.A.V. -D.P.A. type)

DESCRIPTION

CAUTION: Disassembling and assembling this C.A.V.-D.P.A. type pump may be done only in service shops authorized by the pump manufacturer.
In case of pump failure or damage, the pump must be replaced as an assembly, except for certain simple parts on the outside of the pump.

INJECTION PUMP

REMOVAL

1. Remove injection tube.
2. Disconnect fuel hoses and tubes from feed pump and fuel filter.

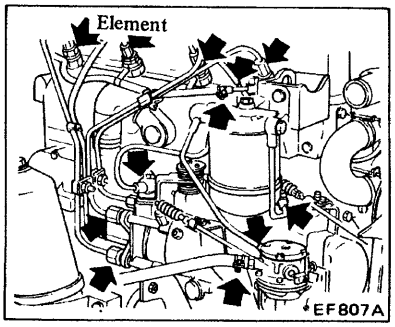

3. Disconnect accelerator wire, engine stop wire and autostop solenoid connector.

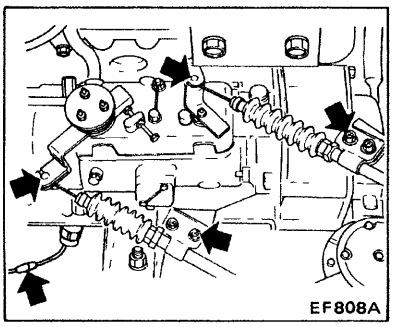

4. Remove feed pump.

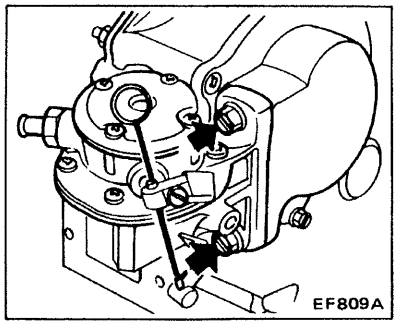

5. Remove timing gear cover.

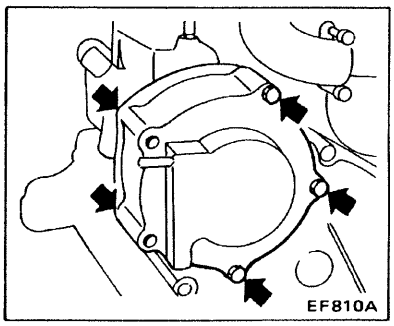

6. Remove feed pump camshaft.

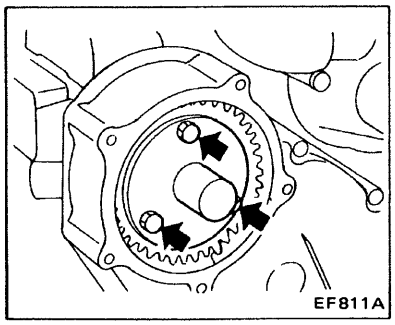

7. Remove injection pump drive gear.

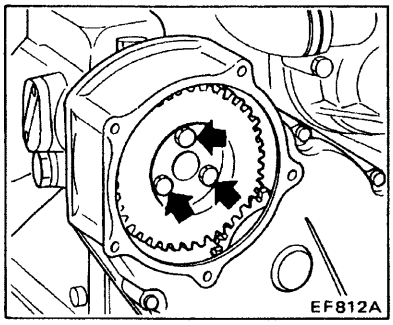

8. Remove injection pump assembly.

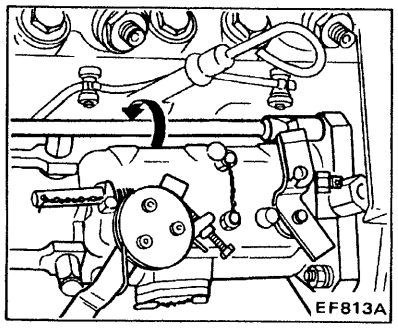

INSTALLATION

Install injection pump assembly in the reverse order of removal observing the following.

1. Align crank pulley and front cover so that No. 1 piston is at top dead center.

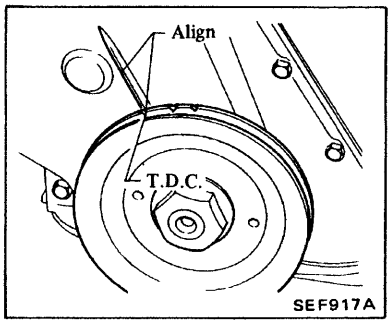

2. Mesh pump drive gear with idler gear **at "Y" mark** and pump drive shaft groove with pump drive gear dowel pin.

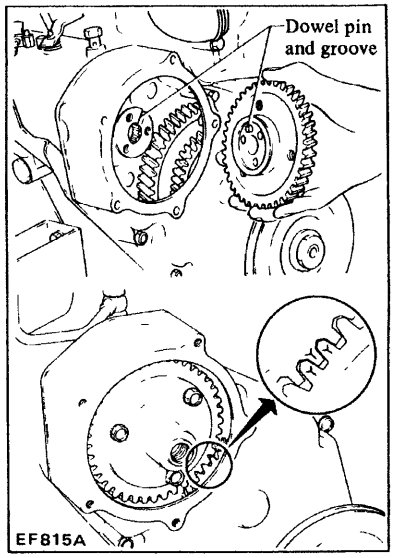

3. Coat sealant with new timing gear gasket.
4. Install new injection pump and timing gear cover gasket.
5. Secure injection pump **by aligning timing mark on pump with timing mark on front plate.**

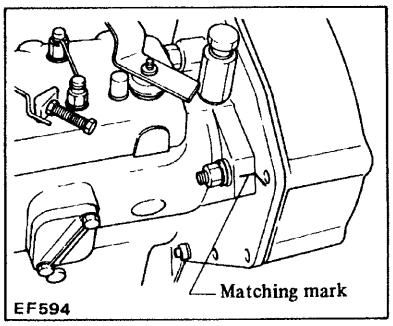

6. Tighten bolts and nut to specified torque.

Ⓣ : **Injection pump to front plate**
15 - 20 N·m
(1.5 - 2.0 kg-m, 11 - 14 ft-lb)
Injection pump drive gear
15 - 20 N·m
(1.5- 2.0 kg-m, 11 - 14 ft-lb)
Feed pump camshaft
15 - 20 N·m
(1.5 - 2.0 kg-m, 11 - 14 ft-lb)

7. Connect injection tubes.

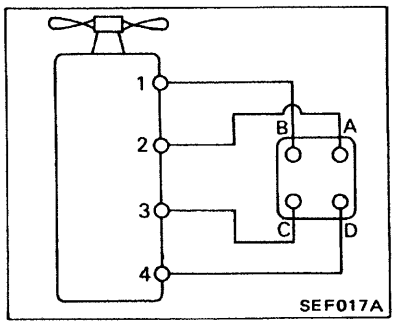

8. Bleed air from fuel system.
9. Adjust accelerator and engine control wire.

BLEEDING FUEL SYSTEM
(Engine on vehicle)

Air should be bled out of fuel system when injection pump is removed or fuel system is repaired.

1. **Set Starting switch at "ON" position.**

WARNING:
Do not start engine.

2. Loosen air vent screw ① of fuel filter.

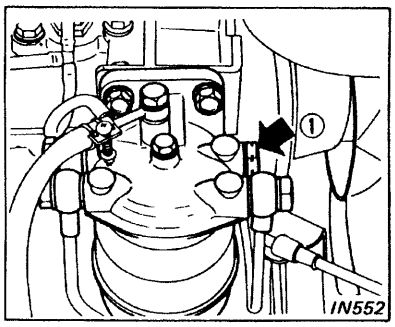

3. Move feed pump priming lever up and down until no air-bubbles come out of air vent screw ①, then tighten the screw.

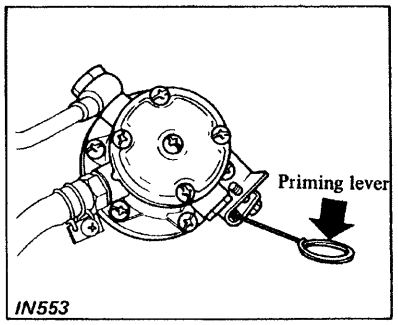

4. Loosen air vent screws ② and ④ on fuel injection pump.
5. Move feed pump priming lever up and down until no air-bubbles come out of air vent screw ②, then tighten screw.

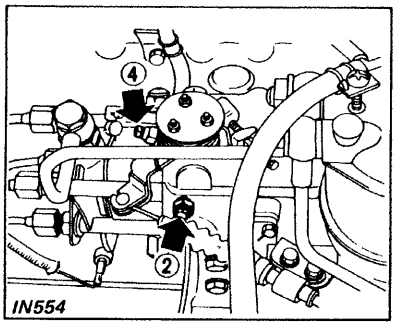

6. Loosen injection tube nuts ③, and **turn starting key to "START". Crank engine until no air bubbles have come out of injection tube nuts.**

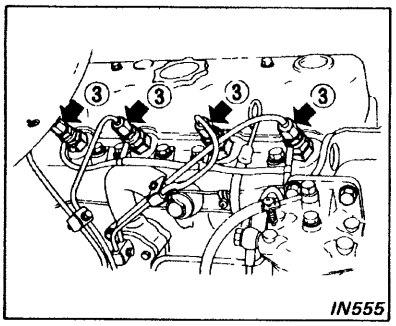

7. Tighten all injection pipe nuts ③.
8. Start engine.
9. Tighten air vent screw ④ after no air-bubbles have come out of it.

WARNING:
Wipe off fuel around engine.

IDLE AND MAXIMUM SPEED ADJUSTMENTS

Refer to section ET for these adjustments.

DISASSEMBLY AND ASSEMBLY

The figure below indicates only those parts which are disassembled and assembled.

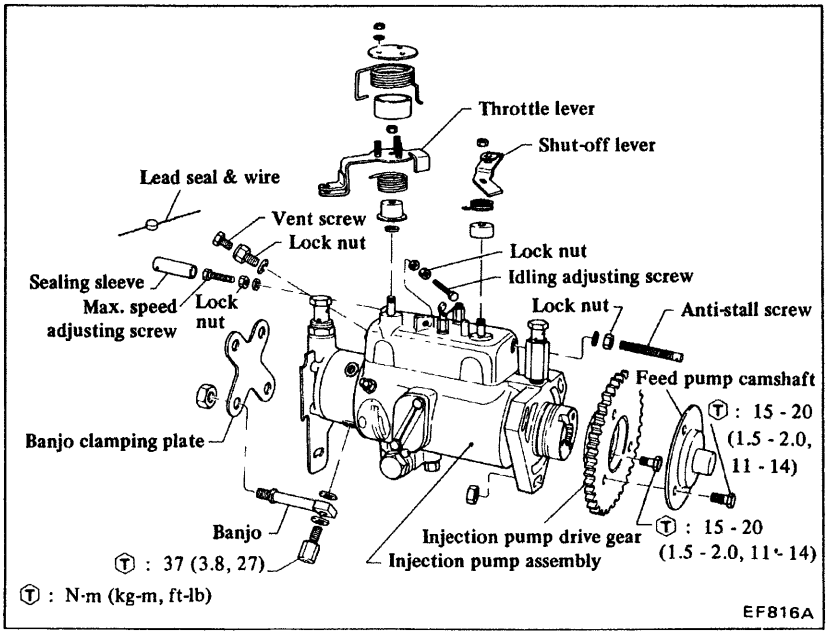

FEED PUMP

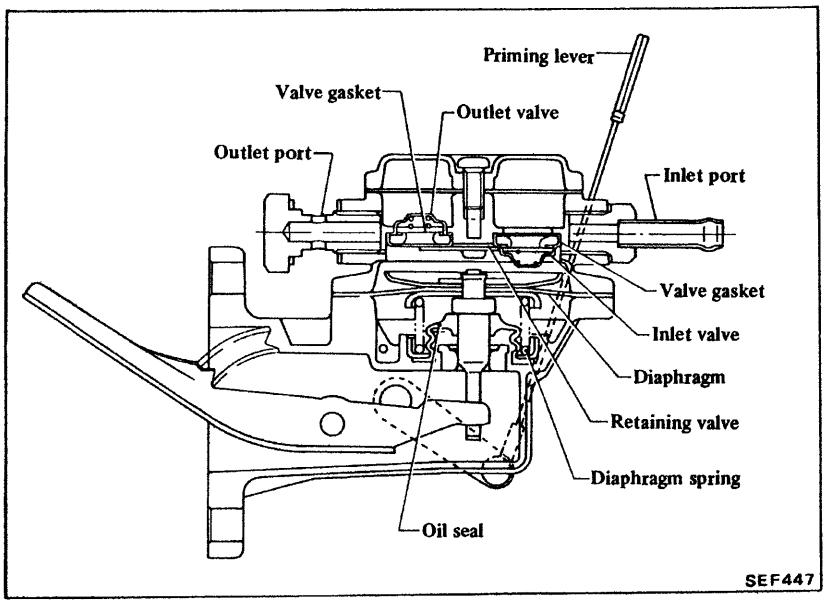

OPERATING TEST

When disconnecting fuel hoses, use a container to receive fuel remaining in fuel hoses.

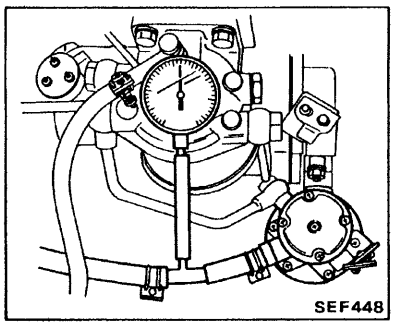

Static pressure test

1. Connect T-connector and a suitable pressure gauge.
2. Check static fuel pressure with engine running at various speeds.

Fuel pump static pressure:
39.2 - 54.9 kPa
(0.392 - 0.549 bar,
0.40 - 0.56 kg/cm^2,
5.7 - 8.0 psi)

If out of specification, replace fuel pump.

INSPECTION

After assembly, test the function as follows:

1. Position fuel pump assembly about 1.0 meter (3.3 ft) above fuel level of fuel filter and connect a pipe from filter to fuel pump.
2. Operate rocker arm by hand. If fuel is drawn up soon after rocker arm is released, fuel pump is functioning properly.

FUEL FILTER

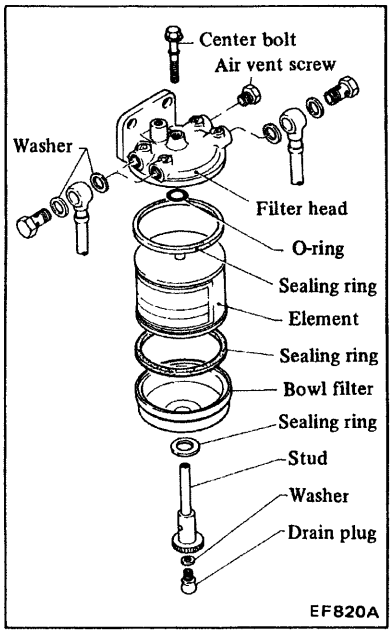

a. **After replacement or installation of fuel filter, be sure to bleed air from the system.**
b. **Replace fuel filter element and drain accumulated water in accordance with Periodic Maintenance.**

SERVICE DATA AND SPECIFICATIONS

- **Disassembling and assembling of the D.P.A. pump may be done only in Lucas – authorized service dealers.**
- **The injection pump, fuel filter and injection nozzle assembly are all available from Lucas – authorized service dealers.**

INSPECTION AND ADJUSTMENT

Feed pump

Static pressure kPa (bar, kg/cm², psi)	39.2 - 54.9 (0.392 - 0.549, 0.40 - 0.56, 5.7 - 8.0)

TIGHTENING TORQUE

	N·m	kg·m	ft·lb
Injection pump to engine front plate	15 - 20	1.5 - 2.0	11 - 14
Injection pump drive gear	15 - 20	1.5 - 2.0	11 - 14
Feed pump camshaft	15 - 20	1.5 - 2.0	11 - 14
Fuel filter to bracket	20 - 25	2.0 - 2.5	14 - 18
Injection nozzle to engine	69 - 78	7.0 - 8.0	51 - 58
Nozzle holder to nozzle nut	98 - 118	10.0 - 12.0	72 - 87
Injection nozzle overflow nut	39 - 49	4.0 - 5.0	29 - 36

INJECTION NOZZLE ASSEMBLY

REMOVAL AND INSTALLATION

1. Remove injection tube assembly and spill tube assembly.

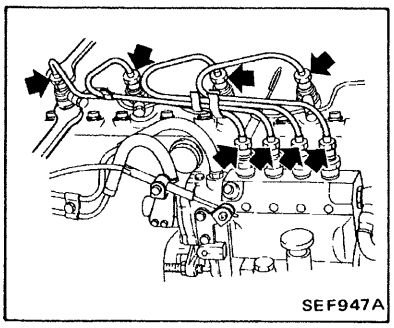

2. Remove injection nozzle assembly with Tool.

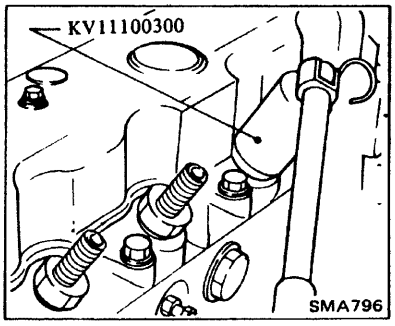

3. Clean injection nozzle holes.

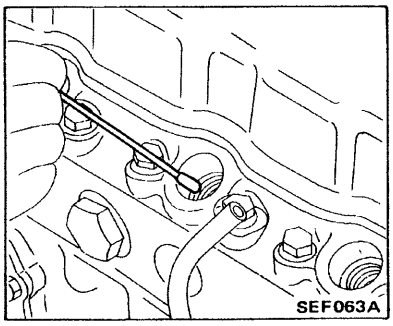

4. Install injection nozzle in the reverse order of removal.

Ⓣ : **Injection nozzle to engine**
Refer to S.D.S.

a. **Always use new injection nozzle gasket.**
When installing the small nozzle gasket (SD23 and SD25) the installation direction in as follows.

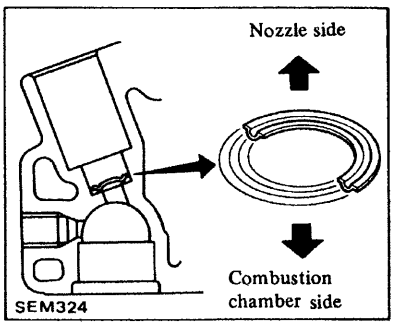

b. To install spill tube, loosen injection nozzle spill nut, and keep nipple free when installing injection nozzle (for types with overflow nut and spill tube separate).

c. Bleed air from fuel system. Refer to Bleeding Air.

FOR DIESEL KIKI

DISASSEMBLY

1. Loosen nozzle nut while keeping nozzle top from turning.

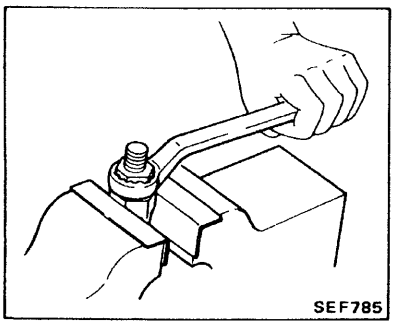

2. Arrange all of disassembled parts in order shown below.

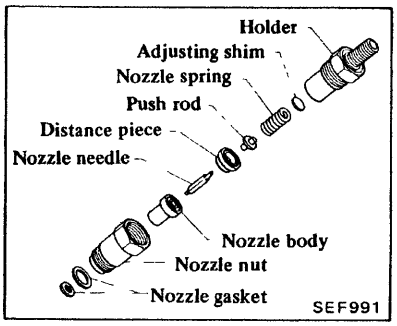

INSPECTION

Whenever replacing nozzle assembly, always replace nozzle gasket with new one.

Thoroughly clean all disassembled parts with fresh kerosene or solvent.

- If nozzle needle is damaged or fused, replace nozzle assembly with a new one.
- If end of nozzle needle is seized or excessively discolored, replace nozzle assembly.
- Check nozzle body and distance piece for proper contact. If excessively worn or damaged, replace nozzle assembly or distance pieces.
- Check distance piece and nozzle holder for proper contact. If excessively worn or damaged, replace distance piece or nozzle holder.
- Check nozzle spring for excessive wear or damage. If excessively worn or damaged, replace it with a new spring.

CLEANING

1. Clean nozzle assembly using the Nozzle Cleaning Kit.

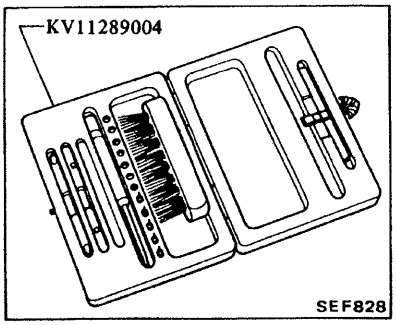

2. Portions which should be cleaned are indicated in figure below.

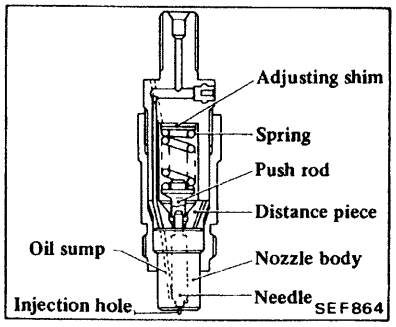

3. Remove any carbon from exterior of nozzle body (except wrapping angle portion) by using Tool.

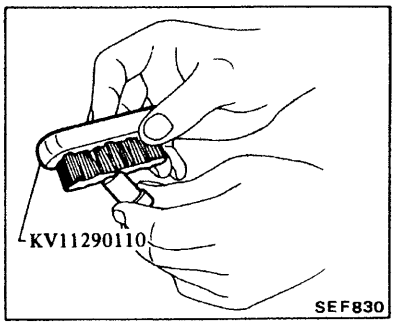

4. Remove oil sump of nozzle body using Tool.

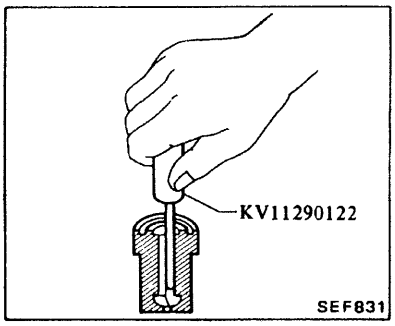

5. Clean nozzle seat by using Tool.

This job should be performed with extra precautions, since efficiency of nozzle depends greatly on a good nozzle seat.

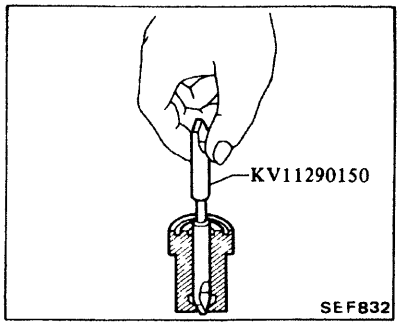

6. Clean spray hole of nozzle body by using Tool.

To prevent spray hole from canting, always clean it by starting with inner side and working towards outside.

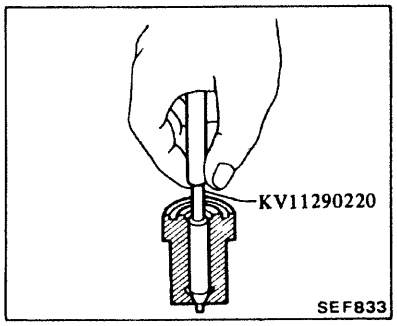

7. Decarbon nozzle needle tip by using Tool.

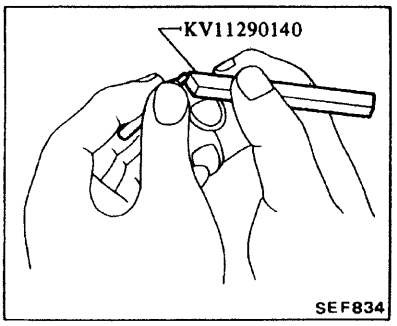

8. Check needle for proper position.
(1) Pull needle about halfway out from body and then release it.
(2) Needle should sink into body very smoothly from just its own weight.
(3) Repeat this test and rotate needle slightly each time.

If needle fails to sink smoothly from any position, replace both needle and body as a unit.

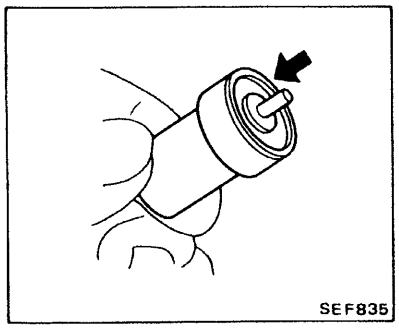

ASSEMBLY

1. Assemble in the reverse order of disassembly, observing the following.

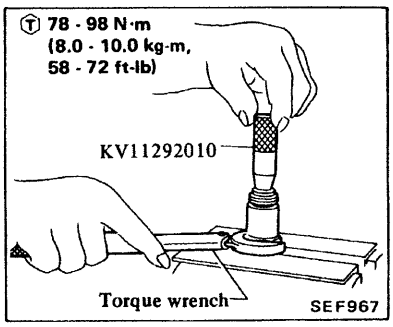

If nozzle body is not installed properly, tool cannot be removed and nozzle body may be damaged.

TEST AND ADJUSTMENT

WARNING
When using nozzle tester, be careful not to allow fuel sprayed from nozzle to come into contact with your hand or body, and make sure that your eyes are properly protected with goggles.

Injection pressure test

1. Install nozzle to injection nozzle tester and **bleed air from flare nut.**

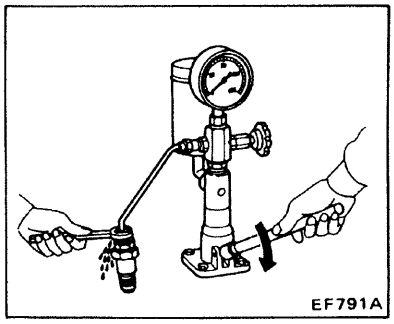

2. Pump the tester handle slowly (one time per second) and watch the pressure gauge.

3. Read the pressure gauge when the injection pressure just starts to drop.

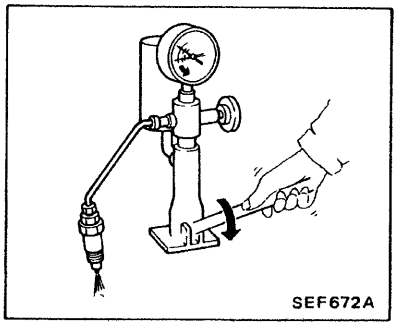

Initial injection pressure:
9,807 - 10,297 kPa
(98.1 - 103.0 bar,
100 - 105 kg/cm², 1,422 - 1,493 psi)
New nozzle initial injection pressure:
10,297 - 11,082 kPa
(103.0 - 110.8 bar,
105 - 113 kg/cm², 1,493 - 1,607 psi)

The new nozzle requires that the initial injection pressure always be checked.

4. To adjust injection pressure, change adjusting shims.

a. **Increasing the thickness of adjusting shims increases injection starting pressure. Decreasing shim thickness reduces initial injection pressure.**
b. **A shim thickness of 0.04 mm (0.0016 in) corresponds approximately to a difference of 471 kPa (4.71 bar, 4.8 kg/cm², 68 psi) in initial injection pressure.**

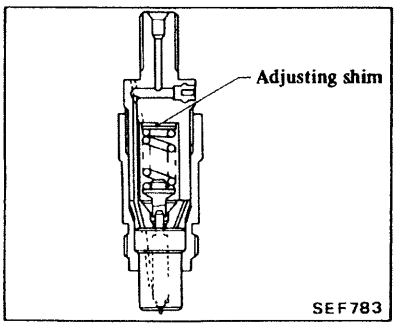

Leakage test

1. Maintain the pressure at about 981 to 1,961 kPa (9.8 to 19.6 bar, 10 to 20 kg/cm^2 , 142 to 284 psi) below initial injection pressure.
2. Check that there is no dripping from the nozzle tip or around the body.

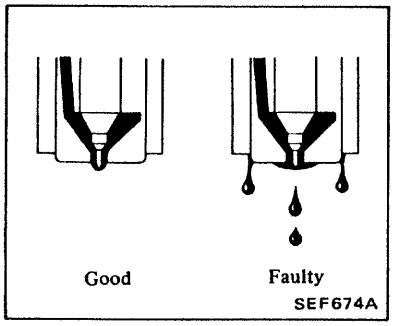

3. If there is leakage, clean, overhaul or replace it.

Spray pattern test

1. Pump the tester handle 4 to 6 times per second or more.
2. Check the spray pattern.

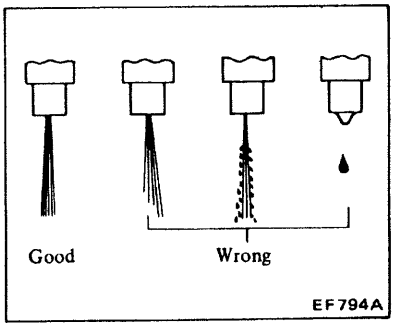

3. If the spray pattern is not correct, clean or replace it.

FOR C.A.V.-D.P.A.

TEST

WARNING:
When using nozzle tester, be careful not to allow fuel sprayed from nozzle to come into contact with your hand or body, and make sure that your eyes are properly protected with goggles.

1. Install nozzle to injection nozzle tester and bleed air from flare nut.
2. Check initial injection pressure by pumping tester handle one time per second.

Initial injection pressure:
12,259 - 13,239 kPa
(122.6 - 132.4 bar,
125 - 135 kg/cm^2,
1,778 - 1,920 psi)
New nozzle initial injection pressure:
13,141 - 13,730 kPa
(131.4 - 137.3 bar,
134 - 140 kg/cm^2,
1;905 - 1,991 psi)

The new nozzle is not required to adjust initial injection pressure.

3. Check spray pattern by pumping tester handle one time per second.

If there is improper initial injection pressure or spray pattern, have it corrected at an authorized pump manufacturer.

SERVICE DATA AND SPECIFICATIONS

FOR DIESEL KIKI

Injection nozzle assembly

Type	Throttle type
Injection angle	0°
Initial injection pressure kPa (bar, kg/cm², psi) New	10,297 - 11,082 (103.0 - 110.8, 105 - 113, 1,493 - 1,607)
Used	9,807 - 10,297 (98.1 - 103.0, 100 - 105, 1,422 - 1,493)

Adjusting shim

Thickness mm (in)	Part No.
0.50 (0.0197)	16613-V0700
0.54 (0.0213)	16613-V0702
0.58 (0.0228)	16613-V0704
0.62 (0.0244)	16613-V0706
0.66 (0.0260)	16613-V0708
0.70 (0.0276)	16613-V0710
0.74 (0.0291)	16613-V0712
0.78 (0.0307)	16613-V0714
0.82 (0.0323)	16613-V0716
0.86 (0.0339)	16613-V0718
0.90 (0.0354)	16613-V0720
0.94 (0.0370)	16613-V0722
0.98 (0.0386)	16613-V0724
1.00 (0.0394)	16613-V0760

FOR C.A.V.-D.P.A. TYPE

Injection nozzle assembly

Type	Closed throttle type
Injection angle	0°
Initial injection pressure kPa (bar, kg/cm², psi) New	13,141 - 13,730 (131.4 - 137.3, 134 - 140, 1,905 - 1,991)
Used	12,259 - 13,239 (122.6 - 132.4, 125 - 135, 1,778 - 1,920)

TIGHTENING TORQUE

Unit		N·m	kg·m	ft·lb
Injection nozzle to engine	*1	59 - 69	6.0 - 7.0	43 - 51
	*2	69 - 78	7.0 - 8.0	51 - 58
Injection holder to nozzle nut		88 - 108	9.0 - 11.0	65 - 80
Injection tube flare nut		29 - 34	3.0 - 3.5	22 - 25
Spill tube nut (nozzle side)		39 - 49	4.0 - 5.0	29 - 36
Injection nozzle overflow nut		39 - 49	4.0 - 5.0	29 - 36

*1: Part No. of injection nozzle
16600-90060, 16600-36W00, 16600-T9000

*2: Part No. of injection nozzle
16600-37502, 16600-90012, 16600-90019, 16600-J5571, 16600-T3401, 16600-T3470, 16600-T6200, 16600-T6201, 16600-Y8400, 16600-Y8401

SPECIAL SERVICE TOOLS

Tool number	Tool name
KV11100300	Nozzle holder socket 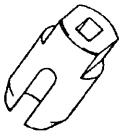
KV11289004 ① KV11290012 ② KV11290110 ③ KV11290122 ④ KV11290140 ⑤ KV11290150 ⑥ KV11290210 ⑦ KV11290220	Nozzle cleaning kit Box Brush Nozzle oil sump scraper Nozzle needle tip cleaner Nozzle seat scraper Nozzle holder Nozzle hole cleaning needle 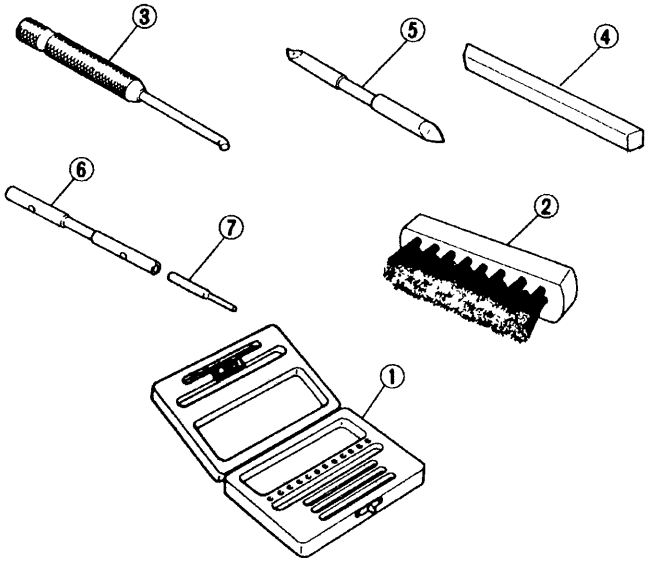
KV11292010	Nozzle centering device 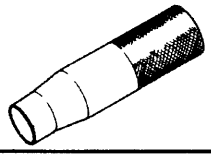

CRANKCASE EMISSION CONTROL SYSTEM

- Crankcase emission control system is employed on the SD23 and SD25 only for 720 model.

DESCRIPTION

The closed-type crankcase ventilation system is utilized as a crankcase emission control system.
The closed-type crankcase emission control system prevents blow-by gas from entering the atmosphere and keeps the internal crankcase pressure constant.
During the valve operation, the blow-by gas is fed into the intake manifold by the air control valve.
This is activated by the internal rocker cover pressure. When the intake air flow is restricted by the throttle chamber, the internal rocker cover pressure decreases. At this point, the crankcase emission control valve keeps the internal rocker cover pressure constant so that air or dust is not sucked in around the crankshaft oil seal.

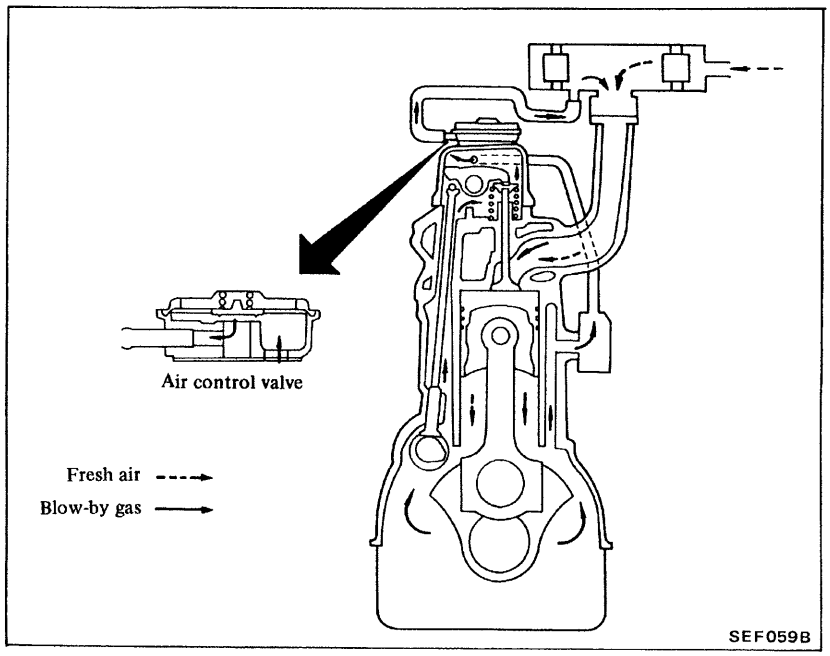

INSPECTION

Air control valve

1. Remove rocker cover.
2. Remove control valve from rocker cover.

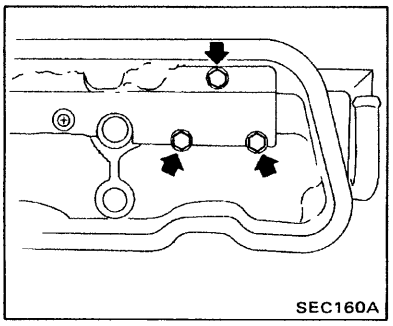

3. After plugging the center hole with adhesive tape, check that air flows from inlet by orally sending air from outlet and that air does not flow sucking in air.

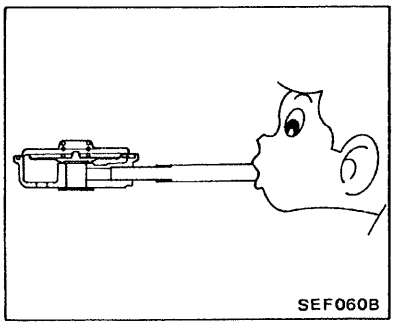

VENTILATION HOSE

1. Check hoses and hose connections for leaks.
2. Disconnect all hoses and clean with compressed air.
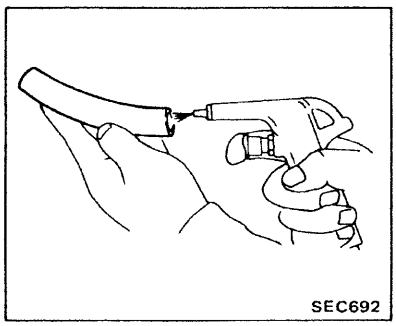
If any hose cannot be free of obstructions, replace.