NISSAN RE4R01A

INDEX

SYMPTOM CHART 3
OIL CHANNELS 5
CONTROL SYSTEM 6
SELF DIAGNOSIS 8
APPLICATION CHART 14
HYDRAULIC LAYOUT 15
WIRING DIAGRAMS 16
TEAR DOWN - ASSEMBLY 19
CONTROL VALVE ASSEMBLY 36
CLUTCH PACK 50
SPECIFICATIONS 92
SPACER PLATE DIAGRAMS 95
LINE PRESSURE 96
TORQUE SPECIFICATIONS - BAND ADJUSTMENT 97
REPEAT PLANETARY FAILURE 98
SOLENOID DESCRIPTION 104
ELECTRICAL PARTS LOCATION 300ZX 105
ELECTRICAL PARTS LOCATION 240SX 106
ELECTRICAL PARTS LOCATION PATHFINDER 107

AUTOMATIC TRANSMISSION SERVICE GROUP
18639 S.W. 107 AVENUE
MIAMI, FLORIDA 33157
(305) 670-4161

Copyright © ATSG 2006

Reprinted
March, 2003

INTRODUCTION
NISSAN/MAZDA RE4R01A

The RE4R01A transmission is currently found in Nissan Pathfinders, 300ZX, 240SX, Mazda MPV's, B2200 and B2600i vehicles. Also the Infinity J30, M30, and Subaru Legacy vehicles have similar units. This rear wheel drive, automatic four speed transmission has a computer system that controls the shift timing ans shift feel, as well as the torque converter clutch. This manual covers the procedures necessary to diagnos, repair and overhaul the RE4R01A transmission. There are also some basic electrical checks and self diagnostic routines included in this manual.

No part of any ATSG publication may be reproduced, stored in any retrieval system or transmitted in any form or by any means, including but not limited to electronic, mechanical, photocopying, recording or otherwise, without ***written*** permission of Automatic Transmission Service Group. This includes all text illustrations, tables and charts.

We wish to thank Nissan Motor Company for the information and illustrations that have made this booklet possible.

The information and part numbers contained in this booklet have been carefully compiled from industry sources known for their reliability, but ATSG does not guarantee its accuracy.

Copyright © ATSG 1993

DALE ENGLAND
FIELD SERVICE CONSULTANT

WAYNE COLONNA
TECHNICAL SUPERVISOR

PETER LUBAN
TECHNICAL CONSULTANT

JON GLATSTEIN
TECHNICAL CONSULTANT

ROLAND ALVAREZ
TECHNICAL CONSULTANT

GERALD CAMPBELL
TECHNICAL CONSULTANT

JIM DIAL
TECHNICAL CONSULTANT

ED KRUSE
TECHNICAL CONSULTANT

GREGORY LIPNICK
TECHNICAL CONSULTANT

DAVID CHALKER
TECHNICAL CONSULTANT

JERRY GOTT
TECHNICAL CONSULTANT

MIKE SOUZA
TECHNICAL CONSULTANT

AUTOMATIC TRANSMISSION SERVICE GROUP
18639 SW 107TH AVENUE
MIAMI, FLORIDA 33157
(305) 670-4161

Symptom Chart

Numbers are arranged in order of probability. Perform inspections starting with number one and working up. Circled numbers indicate that the transmission must be removed from the vehicle.	ON vehicle													OFF vehicle						
	Fluid level / Control linkage	Inhibitor switch / Throttle sensor (Adjustment)	Revolution sensor and speed sensor / Engine revolution signal	Engine idling rpm / Line pressure	Control valve assembly / Shift solenoid A	Shift solenoid B / Line pressure solenoid	Lock-up solenoid / Overrun clutch solenoid	Fluid temperature sensor / Accumulator N-D	Accumulator 1-2 / Accumulator 2-3	Accumulator 3-4 (N-R) / Ignition switch and starter	Torque converter / Oil pump	Reverse clutch / High clutch	Forward clutch / Forward one-way clutch	Overrun clutch / Low one-way clutch	Low & reverse brake / Brake band	Parking components
Engine does not start in "N", "P" ranges.	2	3								1						
Engine starts in range other than "N" and "P".	1	2														
Transmission noise in "P" and "N" ranges.	1	3	4 5	2							⑦⑥					
Vehicle moves when changing into "P" range or parking gear does not disengage when shifted out of "P" range.	1															②
Vehicle runs in "N" range.	1									4		③	②	⑤		
Vehicle will not run in "R" range (but runs in "D", "2" and "1" ranges). Clutch slips. Very poor acceleration.	1			2	4	3						⑤⑥	⑦	⑧	⑨	
Vehicle braked when shifting into "R" range.	1 2			3	5	4						⑥	⑧	⑨	⑦	
Sharp shock in shifting from "N" to "D" range.		2	5	1 3	7	6		4 8					⑨			
Vehicle will not run in "D" and "2" ranges (but runs in "1" and "R" range).	1													②		
Vehicle will not run in "D", "1", "2" ranges (but runs in "R" range). Clutch slips. Very poor acceleration.	1			2	4	3		5				⑥⑦	⑧⑨	⑩		
Clutches or brakes slip somewhat in starting.	1 2	3		4	6	5		7		8	⑬⑫	⑩	⑨		⑪	
Excessive creep.				1												
No creep at all.	1			2	3						⑥⑤		④			
Failure to change gear from "D_1" to "D_2".	2	1	5		4 3										⑥	
Failure to change gear from "D_2" to "D_3".	2	1	5		4	3						⑥			⑦	
Failure to change gear from "D_3" to "D_4".	2	1	4		3			5							⑥	
Too high a gear change point from "D_1" to "D_2", from "D_2" to "D_3", from "D_3" to "D_4".		1	2		3	4										
Gear change directly from "D_1" to "D_3" occurs.	1								2						③	
Engine stops when shifting lever into "R", "D", "2" and "1".				1	3		2				④					
Too sharp a shock in change from "D_1" to "D_2".		1		2	4			5	3						⑥	
Too sharp a shock in change from "D_2" to "D_3".		1		2	4				2			⑤			⑥	

Symptom Chart (Cont'd)

	Numbers are arranged in order of probability. Perform inspections starting with number one and working up. Circled numbers indicate that the transmission must be removed from the vehicle.	ON vehicle										OFF vehicle					
		Fluid level Control linkage	Inhibitor switch Throttle sensor (Adjustment)	Revolution sensor and speed sensor Engine revolution signal	Engine idling rpm Line pressure	Control valve assembly Shift solenoid A	Shift solenoid B Line pressure solenoid	Lock-up solenoid Overrun clutch solenoid	Fluid temperature sensor Accumulator N-D	Accumulator 1-2 Accumulator 2-3	Accumulator 3-4 (N-R) Ignition switch and starter	Torque converter Oil pump	Reverse clutch High clutch	Forward clutch Forward one-way clutch	Overrun clutch Low one-way clutch	Low & reverse brake Brake band	Parking components
–	Too sharp a shock in change from "D_3" to "D_4".	. .	. 1	. .	. 2	4 .	. .	. .	. .	. .	3 .	. .	. .	. .	⑥ .	. ⑤	.
–	Almost no shock or clutches slipping in change from "D_1" to "D_2".	1 .	. 2	. .	. 3	5 .	. .	. .	. .	4 .	. .	. .	. .	. .	. .	. ⑥	.
–	Almost no shock or slipping in change from "D_2" to "D_3".	1 .	. 2	. .	. 3	5 .	. .	. .	. .	. 4	. .	. .	. ⑥	. .	. .	. ⑦	.
–	Almost no shock or slipping in change from "D_3" to "D_4".	1 .	. 2	. .	. 3	5 .	. .	. .	. .	. .	4 .	. .	. ⑤	. .	. .	. ⑦	.
–	Vehicle braked by gear change from "D_1" to "D_2".	1 .	. .	. .	. .	. .	. .	. .	. .	. .	. .	. .	② ④	. .	. ⑤	③ .	.
–	Vehicle braked by gear change from "D_2" to "D_3".	1 .	. .	. .	. .	. .	. .	. .	. .	. .	. .	. .	. .	. .	. .	. ②	.
–	Vehicle braked by gear change from "D_3" to "D_4".	1 .	. .	. .	. .	. .	. .	. .	. .	. .	. .	. .	④ .	. ③	② .	. .	.
–	Maximum speed not attained. Acceleration poor.	1 .	2 .	. .	. .	5 3	4 .	. .	. .	. .	. .	⑪ ⑩	⑥ ⑦	. .	. .	⑨ ⑧	.
–	Failure to change gear from "D_4" to "D_3".	1 .	. 2	. .	. .	6 4	. 5	. 3	. .	. .	. .	. .	. .	. .	⑧ .	⑦ .	.
–	Failure to change gear from "D_3" to "D_2" or from "D_4" to "D_2".	1 .	. 2	. .	. .	5 3	4 .	. .	. .	. .	. .	. .	. ⑥	. .	. .	. ⑦	.
–	Failure to change gear from "D_2" to "D_1" or from "D_3" to "D_1".	1 .	. 2	. .	. .	5 3	4 .	. .	. .	. .	. .	. .	. ⑦	. .	. ⑥	. ⑧	.
–	Gear change shock felt during deceleration by releasing accelerator pedal.	. .	. 1	. .	. 2	4 .	. .	. 3	. .	. .	. .	. .	. .	. .	. .	. .	.
–	Too high a change point from "D_4" to "D_3", from "D_3" to "D_2", from "D_2" to "D_1".	. .	. 1	2 .	. .	. .	. .	. .	. .	. .	. .	. .	. .	. .	. .	. .	.
–	Kickdown does not operate when depressing pedal in "D_4" within kickdown vehicle speed.	. .	. 1	2 .	. .	. 3	4 .	. .	. .	. .	. .	. .	. .	. .	. .	. .	.
–	Kickdown operates or engine overruns when depressing pedal in "D_4" beyond kickdown vehicle speed limit.	. .	. 2	1 .	. .	. 3	4 .	. .	. .	. .	. .	. .	. .	. .	. .	. .	.
–	Races extremely fast or slips in changing from "D_4" to "D_3" when depressing pedal.	1 .	. 2	. .	. 3	5 .	. 4	. .	. .	. .	. .	. .	. ⑥	⑦ .	. .	. .	.
–	Races extremely fast or slips in changing from "D_4" to "D_2" when depressing pedal.	1 .	. 2	. .	. 3	6 5	. 4	. .	. .	. .	. .	. .	. .	⑧ .	. .	. ⑦	.
–	Races extremely fast or slips in changing from "D_3" to "D_2" when depressing pedal.	1 .	. 2	. .	. 3	5 .	. 4	. .	8 .	. 0	. .	. .	. ⑨	⑦ .	. .	. ⑥	.
–	Races extremely fast or slips in changing from "D_4" or "D_3" to "D_1" when depressing pedal.	1 .	. 2	. .	. 3	5 .	. 4	. .	. .	. .	. .	. .	. .	⑥ ⑦	. ⑧	. .	.
–	Vehicle will not run in any range.	1 2	. .	. .	. 3	. .	. 4	. .	. .	. .	. .	⑨ ⑤	. ⑥	. .	. .	⑧ ⑦	⑩
–	Transmission noise in "D", "2", "1" and "R" ranges.	1 .	. .	. .	. .	. .	. .	. .	. .	. .	. .	② .	. .	. .	. .	. .	.

Symptom Chart (Cont'd)

Numbers are arranged in order of probability. Perform inspections starting with number one and working up. Circled numbers indicate that the transmission must be removed from the vehicle.	ON vehicle														OFF vehicle					
	Fluid level / Control linkage	Inhibitor switch / Throttle sensor (Adjustment)	Revolution sensor and speed sensor / Engine revolution signal	Engine idling rpm / Line pressure	Control valve assembly / Shift solenoid A	Shift solenoid B / Line pressure solenoid	Lock-up solenoid / Overrun clutch solenoid	Fluid temperature sensor / Accumulator N-D	Accumulator 1-2 / Accumulator 2-3	Accumulator 3-4 (N-R) / Ignition switch and starter	Torque converter / Oil pump	Reverse clutch / High clutch	Forward clutch / Forward one-way clutch	Overrun clutch / Low one-way clutch	Low & reverse brake / Brake band	Parking components
Failure to change from "D_3" to "2_3" when changing lever into "2" range.	. 7	1 2	. .	. .	6 5	4 .	. 3	. .	. .	. .	. .	. .	. .	⑨ .	. ⑧	.
Gear change from "2_2" to "2_3" in "2" range.	. .	1 .	. .	. .	. .	. .	. .	. .	. .	. .	. .	. .	. .	. .	. .	.
Engine brake does not operate in "1" range.	. 2	1 3	4 .	. .	6 5	. .	. 7	. .	. .	. .	. .	. .	. .	⑧ .	⑨ .	.
Gear change from "1_1" to "1_2" in "1" range.	. 2	1 .	. .	. .	. .	. .	. .	. .	. .	. .	. .	. .	. .	. .	. .	.
Does not change from "1_2" to "1_1" in "1" range.	. .	1 .	2 .	. .	4 3	. .	. 5	. .	. .	. .	. .	. .	. .	⑥ .	⑦ .	.
Large shock changing from "1_2" to "1_1" in "1" range.	. .	. .	. .	. .	1 .	. .	. .	. .	. .	. .	. .	. .	. .	. .	② .	.
Transmission overheats.	1 .	. 3	. .	2 4	6 .	. 5	. .	. .	. .	. .	⑭ ⑦	⑧ ⑨	⑪ .	⑫ .	⑬ ⑩	.
A.T.F. shoots out during operation. White smoke emitted from exhaust pipe during operation.	1 .	. .	. .	. .	. .	. .	. .	. .	. .	. .	. .	② ③	⑤ .	⑥ .	⑦ ④	.
Offensive smell at fluid charging pipe.	1 .	. .	. .	. .	. .	. .	. .	. .	. .	. .	② ③	④ ⑤	⑦ .	⑧ .	⑨ ⑥	.
Torque converter is not locked up.	. .	3 1	2 4	. 6	8 .	. .	7 .	5 .	. .	. .	⑨ .	. .	. .	. .	. .	.
Lock-up piston slip	1 .	. 2	. .	. 3	6 .	. 5	4 .	. .	. .	. .	⑦ .	. .	. .	. .	. .	.
Lock-up point is extremely high or low.	. .	. 1	2 .	. .	4 .	. .	3 .	. .	. .	. .	. .	. .	. .	. .	. .	.
A/T does not shift to "D_4" when driving with overdrive switch "ON".	. .	2 1	3 .	. 8	6 4	. .	. 5	7 .	. .	. .	. .	. .	. .	⑩ .	. ⑨	.
Engine is stopped at "R", "D", "2" and "1" ranges.	1 .	. .	. .	. .	5 4	3 .	2 .	. .	. .	. .	. .	. .	. .	. .	. .	.

A/T Electrical Parts Location

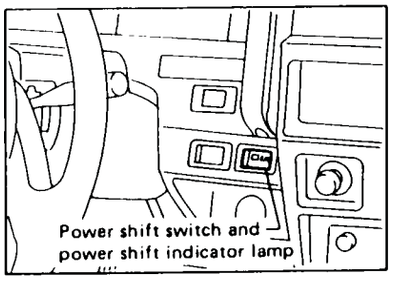

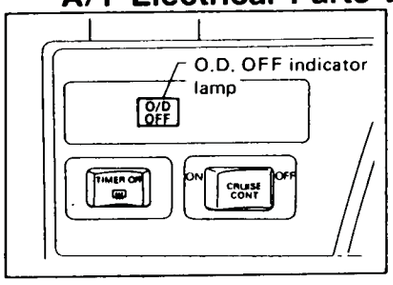

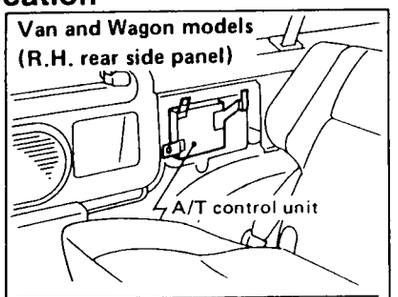

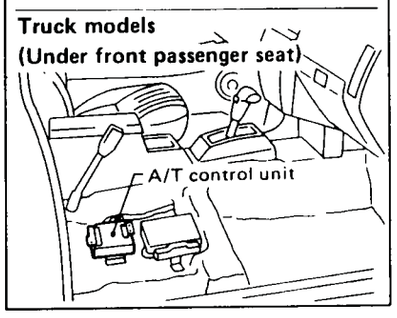

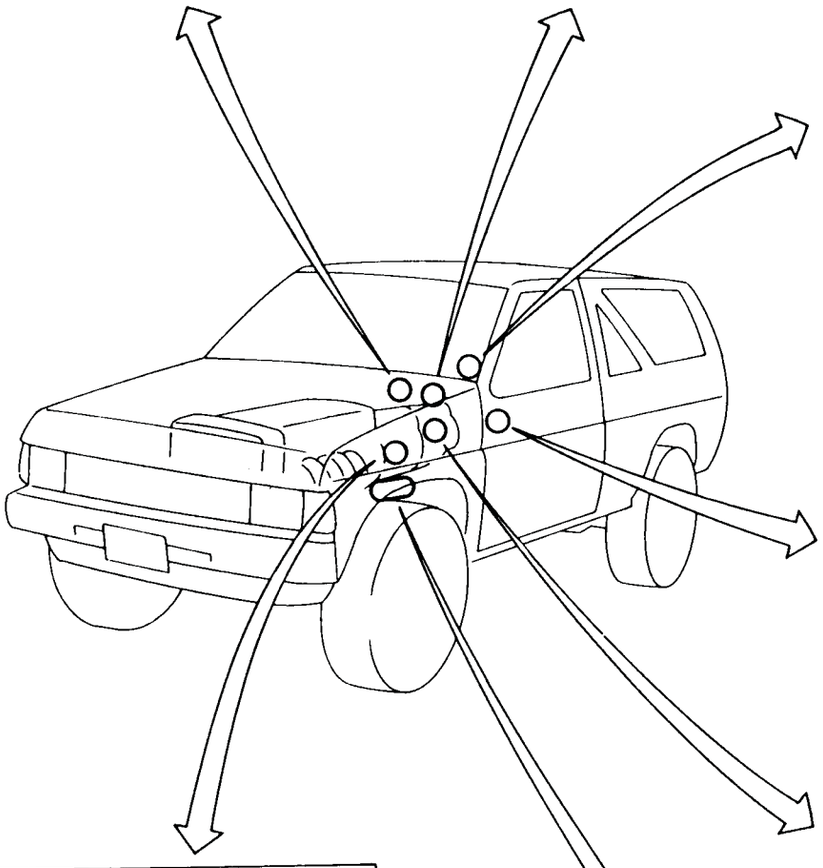

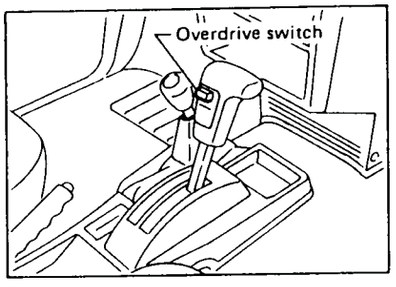

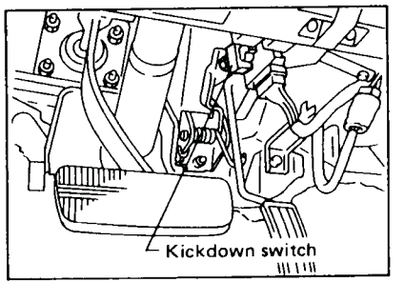

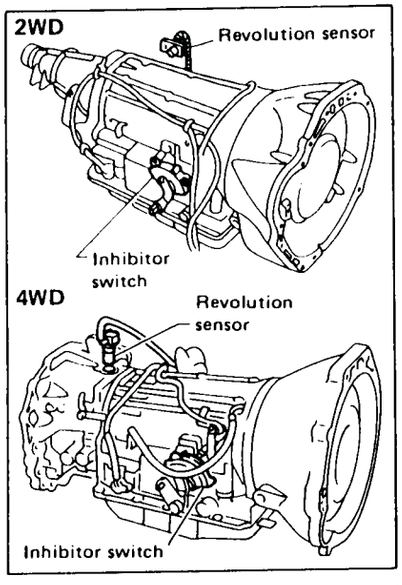

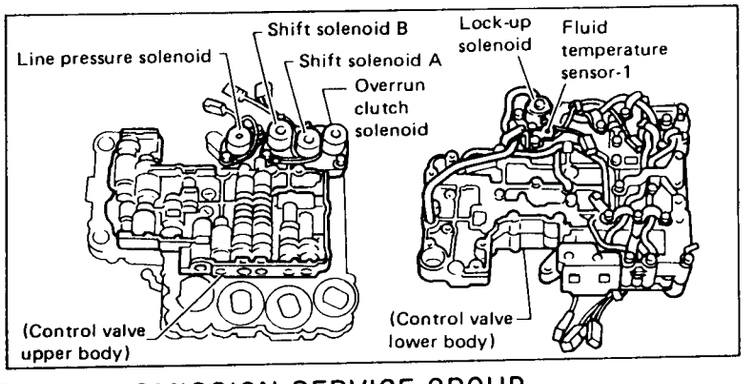

A/T Electrical Parts Location

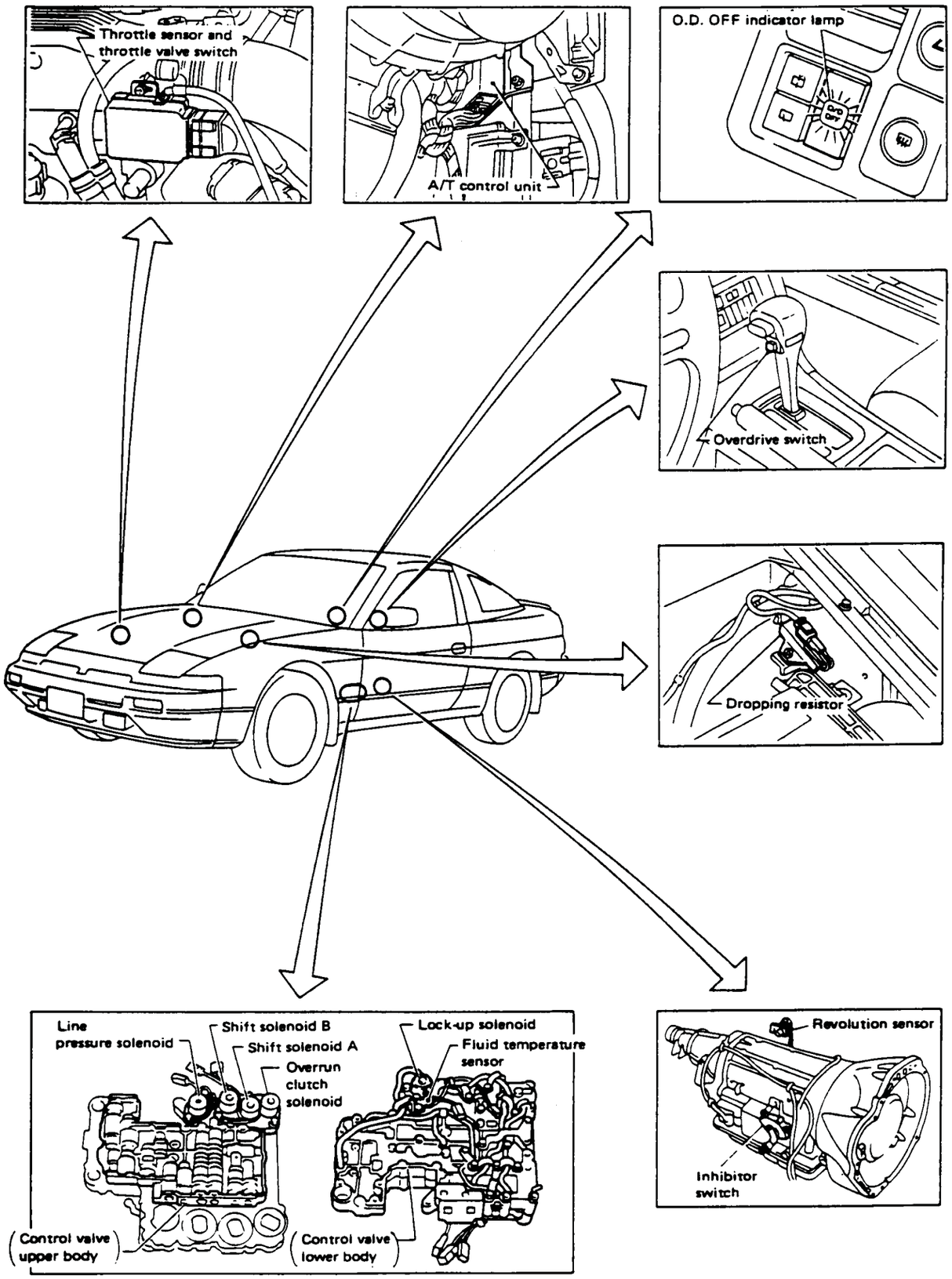

Self Diagnosis Inspection

The following procedure is used to select self diagnosis.

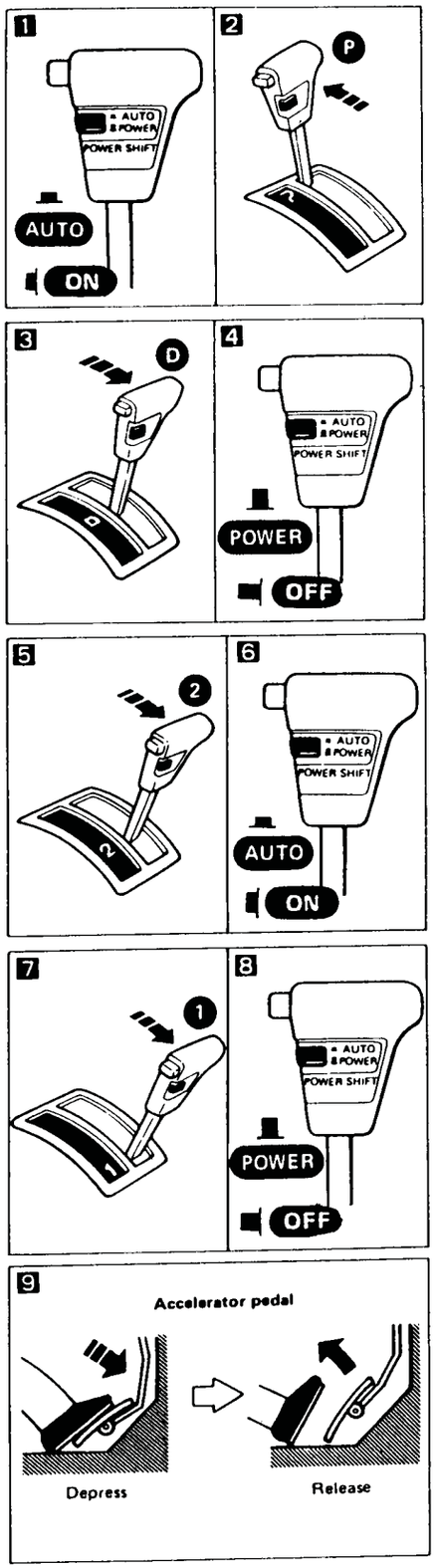

DIAGNOSIS START

Start engine and warm it up to normal engine operating temperature.

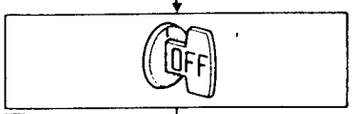

1 Set power shift switch in "AUTO" position.

2 Move selector lever to "P" range.

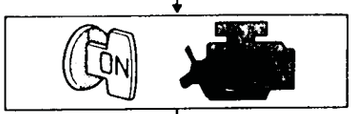

Does power shift indicator lamp come on for about 2 seconds?

- Yes →
- No → Refer to service manual Self Diagnosis Inspection.

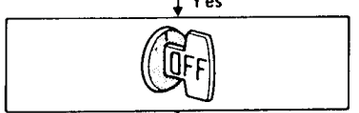

3 Move selector lever to "D" range.

4 Set power shift switch in "POWER" position.

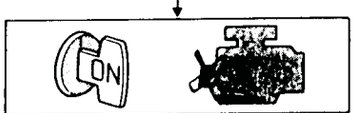

5 Move selector lever to "2" range.

6 Set power shift switch in "AUTO" position.

7 Move selector lever to "1" range.

8 Set power shift switch in "POWER" position.

9 Depress accelerator pedal fully and release it.

Check power shift indicator lamp.
Refer to JUDGEMENT OF SELF-DIAGNOSIS CODE.

DIAGNOSIS END

Power shift indicator lamp:	Damaged circuit
All judgement flickers are same. 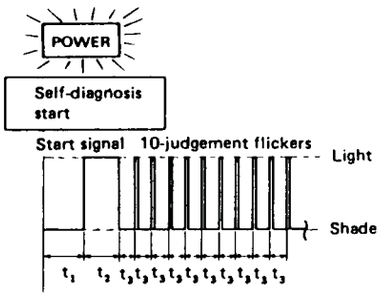 	All circuits that can be confirmed by self-diagnosis are O.K.
1st judgement flicker is longer than others. 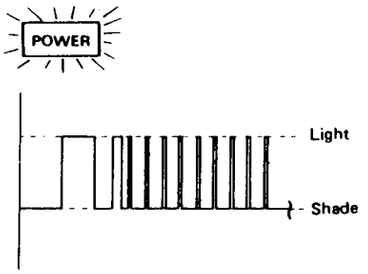 	Revolution sensor circuit is short-circuited or disconnected. 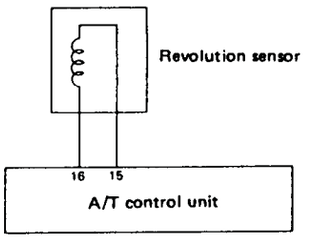 ➡ **Go to revolution sensor circuit check.**
2nd judgement flicker is longer than others. 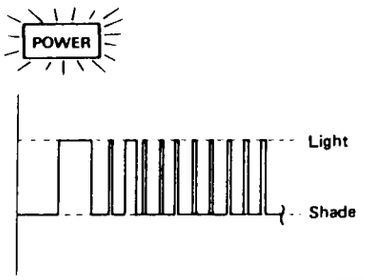 	Speed sensor circuit is short-circuited or disconnected. 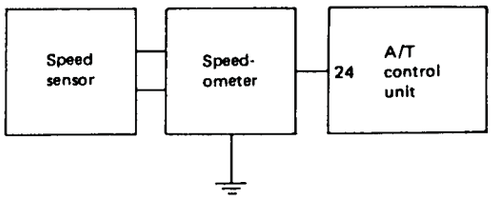 ➡ **Go to speed sensor circuit check.**
3rd judgement flicker is longer than others. 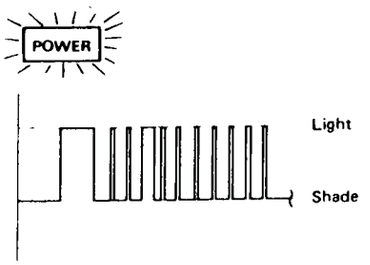 	Throttle sensor circuit is short-circuited or disconnected. 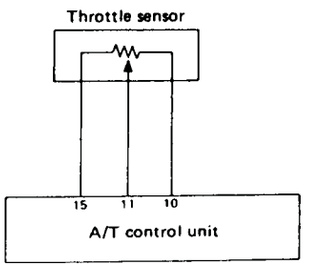 ➡ **Go to throttle sensor circuit check.**

t_1 = 2.5 seconds t_2 = 2.0 seconds t_3 = 1.0 second

For circuit checks, see the Factory Service Manual.

Power shift indicator lamp:	Damaged circuit
4th judgement flicker is longer than others. 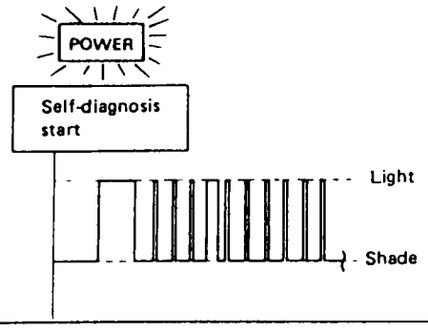 	Shift solenoid A circuit is short-circuited or disconnected. 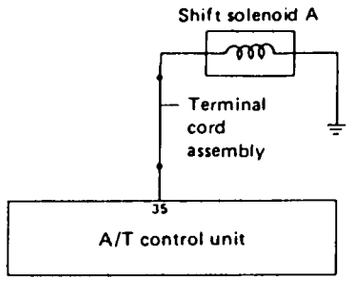 ➡ **Go to shift solenoid A circuit check.**
5th judgement flicker is longer than others. 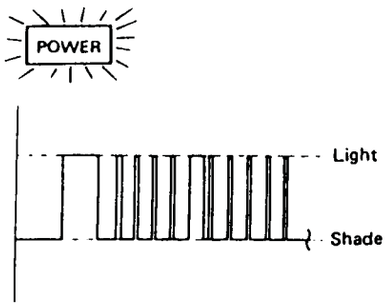 	Shift solenoid B circuit is short-circuited or disconnected. 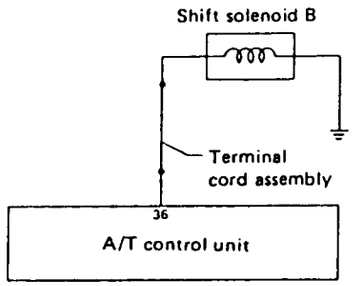 ➡ **Go to shift solenoid B circuit check.**
6th judgement flicker is longer than others. 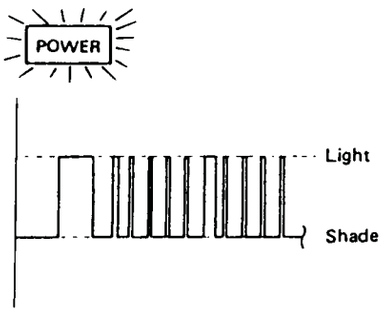 	Overrun clutch solenoid circuit is short-circuited or disconnected. 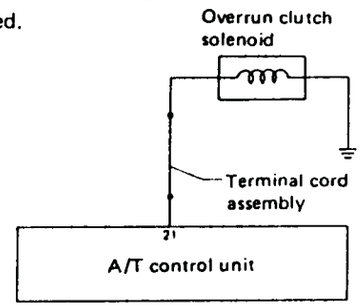 ➡ **Go to overrun clutch solenoid circuit check.**
7th judgement flicker is longer than others. 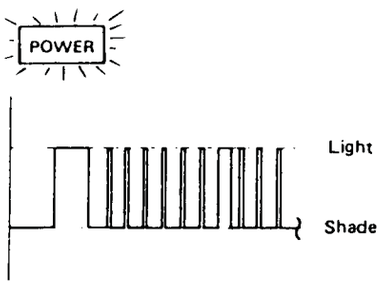 	Lock-up solenoid circuit is short-circuited or disconnected. 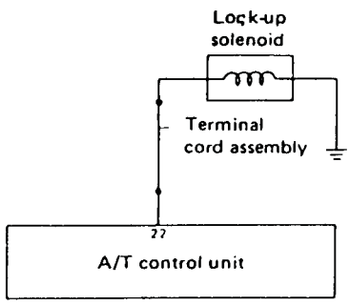 ➡ **Go to lock-up solenoid circuit check.**

Power shift indicator lamp:	Damaged circuit
8th judgement flicker is longer than others. 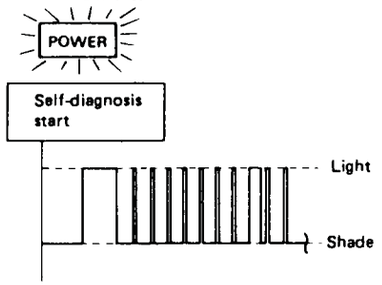 	Fluid temperature sensor is disconnected or A/T control unit power source circuit is damaged. 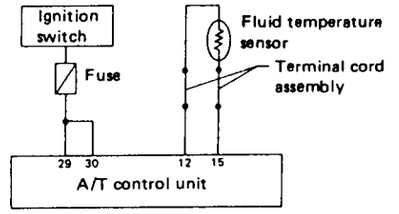 ➡ **Go to fluid temperature sensor and A/T control unit power source circuit check.**
9th judgement flicker is longer than others. 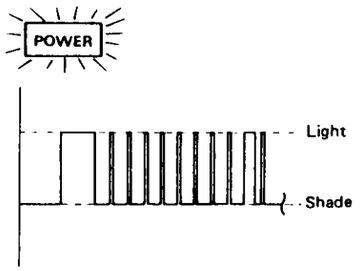 	Engine revolution signal circuit is short-circuited or disconnected. 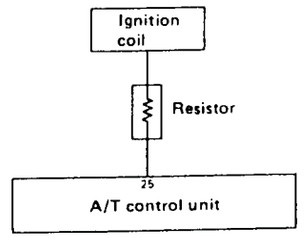 ➡ **Go to engine revolution signal circuit check.**
10th judgement flicker is longer than others. 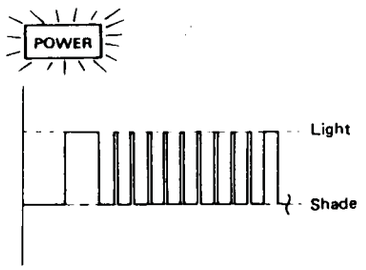 	Line pressure solenoid circuit is short-circuited or disconnected. 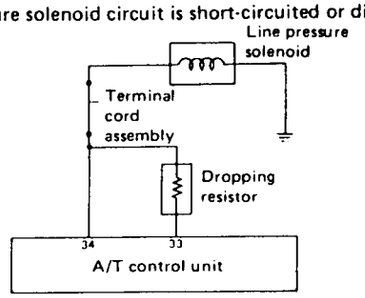 ➡ **Go to line pressure solenoid circuit check.**
Flickers as shown below. 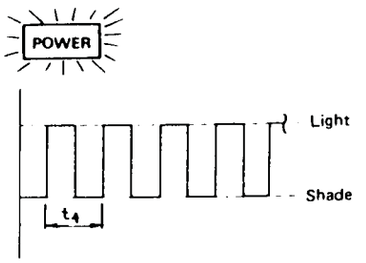 	Battery power is low. Battery has been disconnected for a long time. Battery is connected conversely. (When reconnecting A/T control unit connectors. – This is not a problem.)

t_4 = 1.0 second

For circuit checks, see the Factory Service Manual.

TORQUE CONVERTER LOCK-UP CONTROL

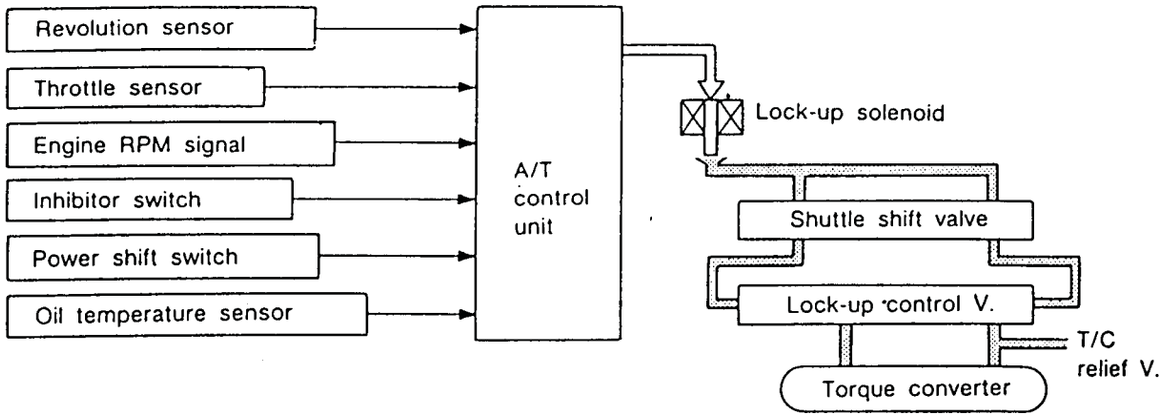

Torque converter lock-up occurs in 4th gear (O.D.) only and is controlled by the automatic transmission unit after first processing signals from various input sensors in conjunction with its preprogrammed memory data.

The control unit then energizes a solenoid valve, retracting its plunger, thus draining pilot pressure via the shuttle shift valve from one end of the lock-up control valve. The control valve then moves, draining torque converter pressure from the rear side of the lock-up piston.

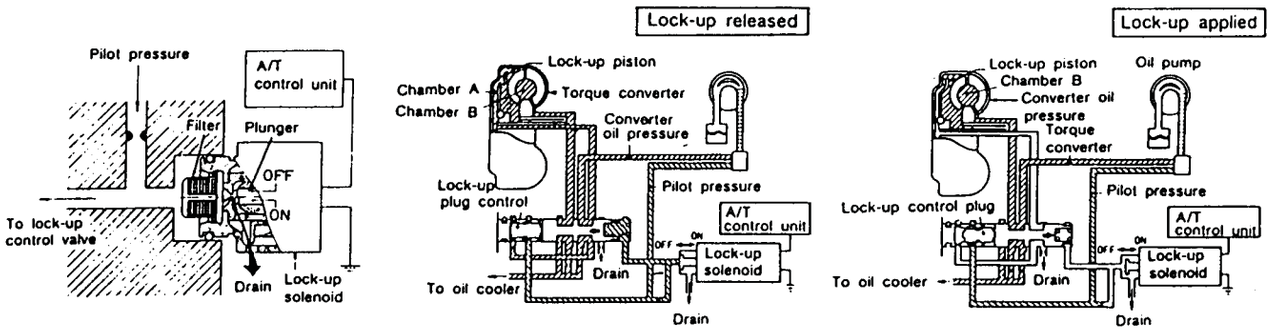

Conditions for Lock-Up Operation

Torque converter lock-up will only occur when all of the conditions listed are met. (Refer also Shift Schedule).

Power shift switch	Auto
Select lever	"D" range
Gear position	4th
Vehicle speed	More than set value
Throttle sensor	Less than set opening
Oil temperature	More than 40°C

SHIFT SCHEDULE CONTROL

The transmission gear change points are determined by the automatic transmission control unit after first processing information from various input sensors in conjunction with the control unit memory data on basic gear change points. The control unit then, either energizes or de-energizes shift solenoids A and/or B, thus applying or releasing pilot pressure to shift valves A and/or B.

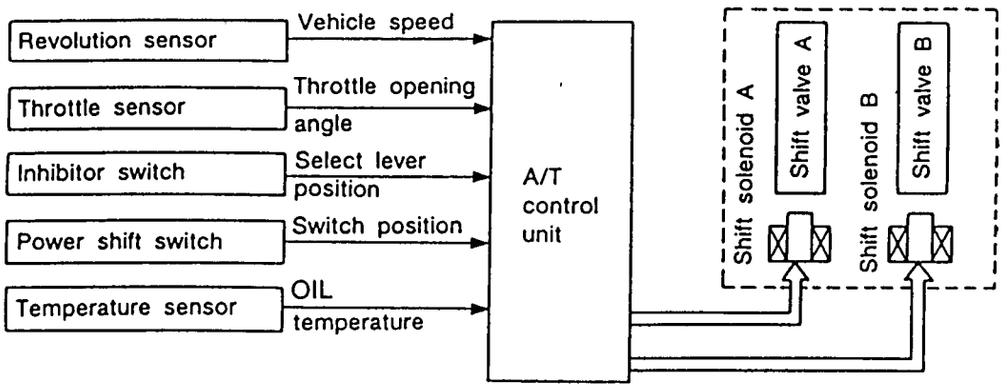

Relationship of Shift Solenoid to Gear Selection

Shift Solenoid	$D_1, 2_1, 1_1$	$D_2, 2_2, 1_2$	D_3	D_4 (OD)	N·P	R
A	ON	OFF	OFF	ON	ON	ON
B	ON	ON	OFF	OFF	ON	ON

NOTE: Gear selection is also relevant to manual valve position.

Shift Solenoid Operation

The shift solenoid performs a simple on/off function. When energized (on), its plunger protrudes blocking the drain on the pilot pressure line. When de-energized (off), the plunger retracts opening the drain on the pilot pressure line.

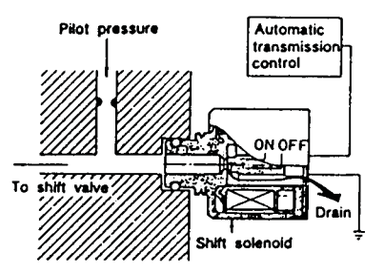

Shift Valves A and B Operation

Pilot pressure, when applied to the shift valve due to the operation of a solenoid valve, acts on the end of the shift valve, overcomes the opposing spring pressure at the other end and the valve moves.

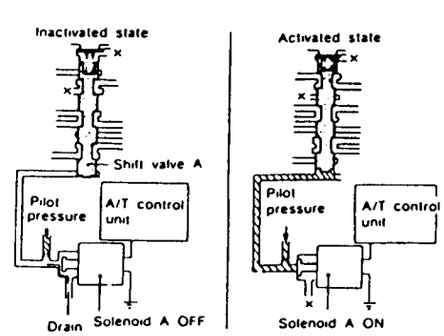

Electrical Control Chart

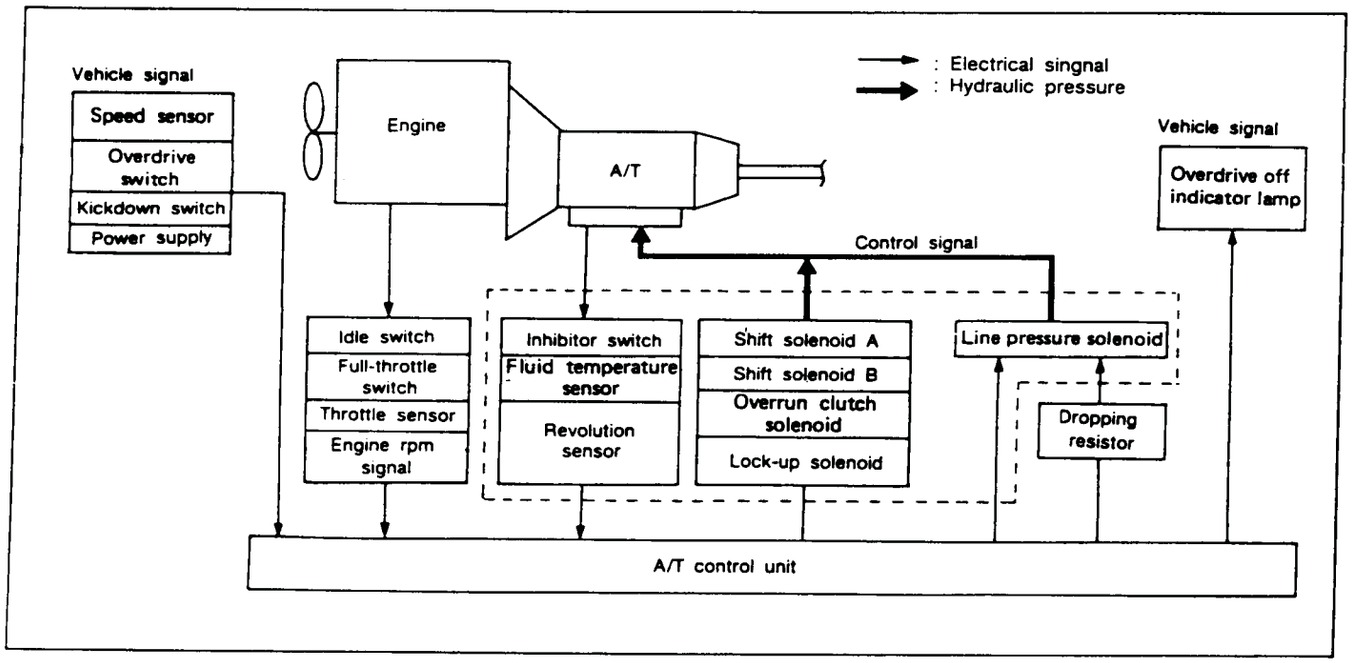

Mechnical Operation

Shift position		Reverse clutch	High clutch	Forward clutch	Overrun clutch	Band servo 2nd apply	Band servo 3rd release	Band servo 4th apply	Forward one-way clutch	Low one-way clutch	Low & reverse brake	Lock-up	Remarks
P													PARK
R		○									○		REVERSE
N													NEUTRAL
D *4	1st			○	⊗				●	●			Automatic shift 1 ↔ 2 ↔ 3 ↔ 4
	2nd			○	*1 O	○			●				
	3rd		○	○	O	*2⊗	⊗		●				
	4th		○	⊗		*3⊗	⊗	○				○	
2	1st			○	⊗				●	●			Automatic shift 1 ↔ 2
	2nd			○	O	○			●				
1	1st			○	○				●		○		Locks (held stationary) in 1st speed 1 ← 2
	2nd			○	○	○			●				

*1. Operates when overdrive switch is set to "OFF".
*2. Oil pressure is applied to both 2nd "apply" side and 3rd "release" side of band servo piston. However, because oil pressure area on the "release" side is greater than that on the "apply" side, brake band does not contract.
*3. Oil pressure is applied to 4th "apply" side in condition *2 above, and brake band contracts.
*4. A/T will not shift to 4th when overdrive switch is set to "OFF" position.
○ : Operates.
O : Operates when throttle opening is less than 1/16. Engine brake activates.
● : Operates during "progressive" acceleration.
⊗ : Operates but does not affect power transmission.
⊗ : Operates when throttle opening is less than 1/16 but does not affect engine brake.

RE4R01A Hydraulic Layout

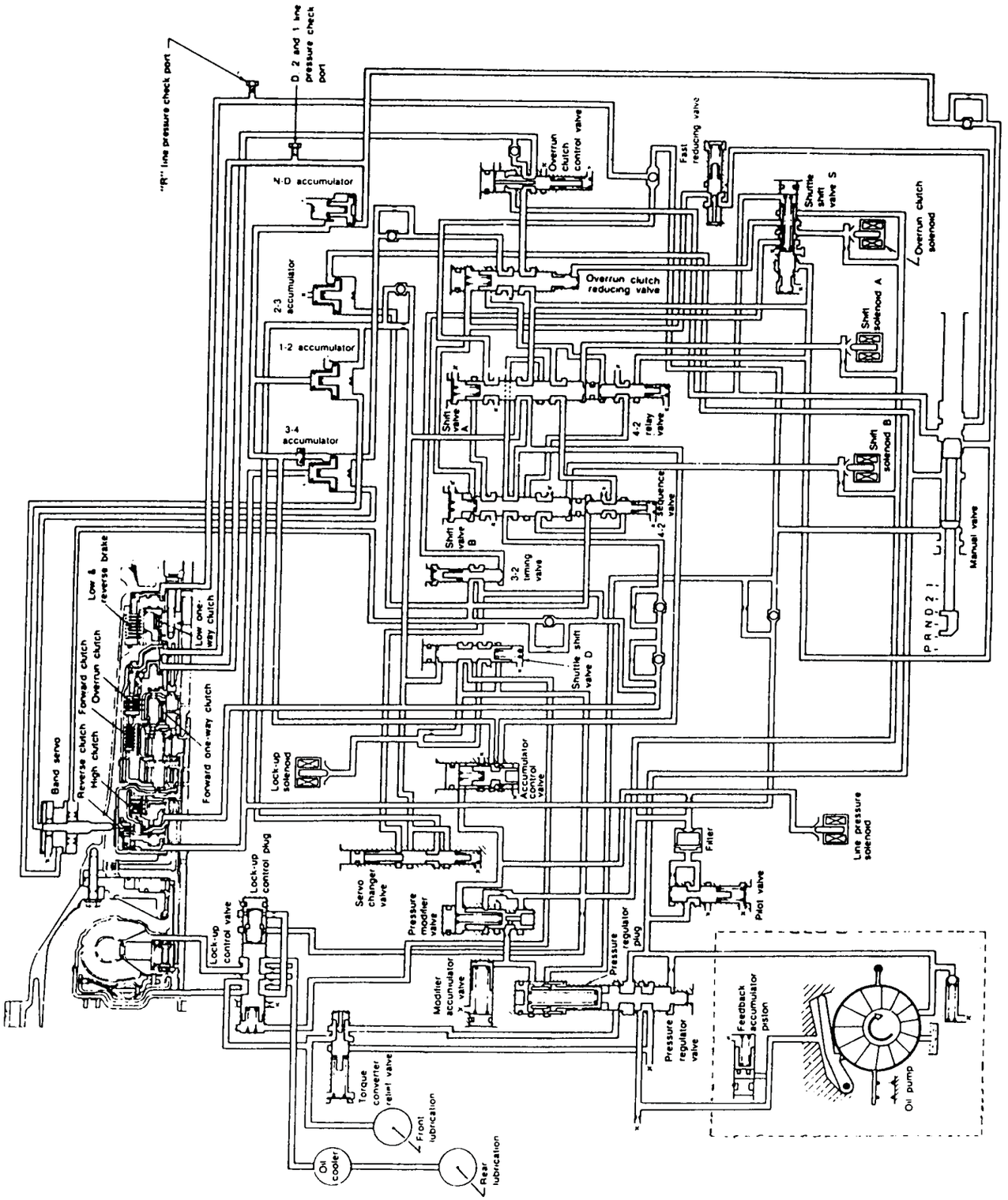

Wiring Diagram

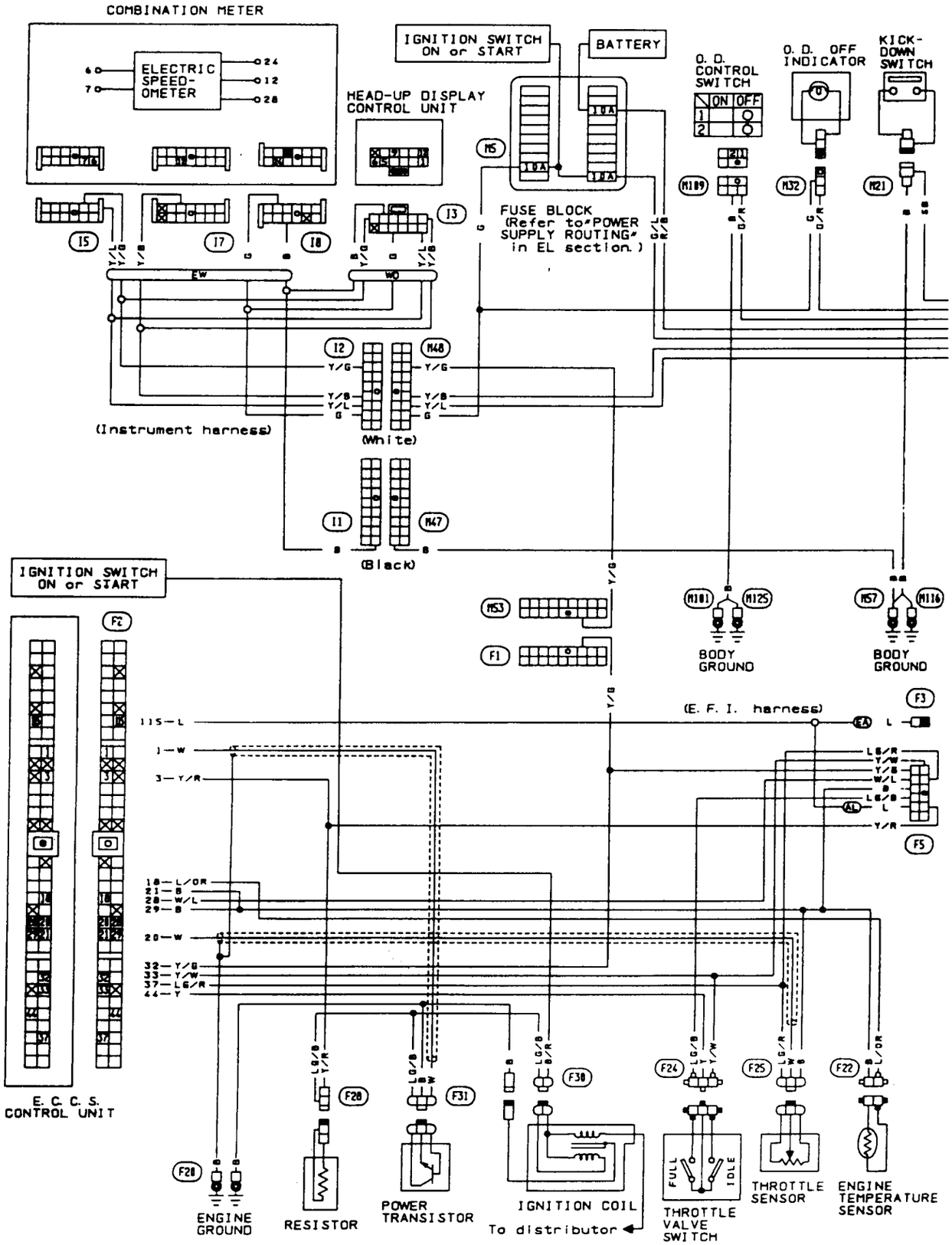

Wiring Diagram (Cont'd)

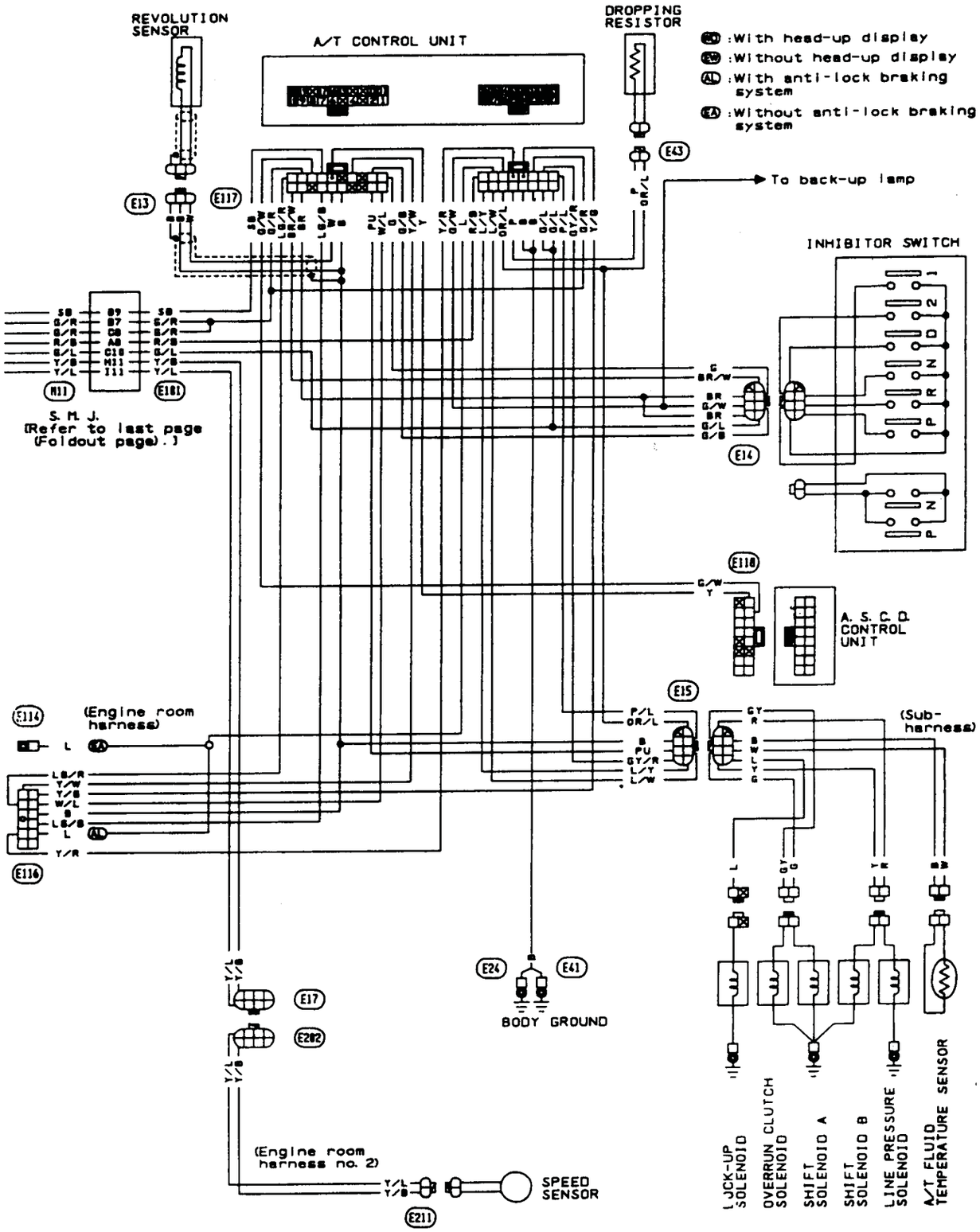

Circuit Diagram for Quick Pin Point Check

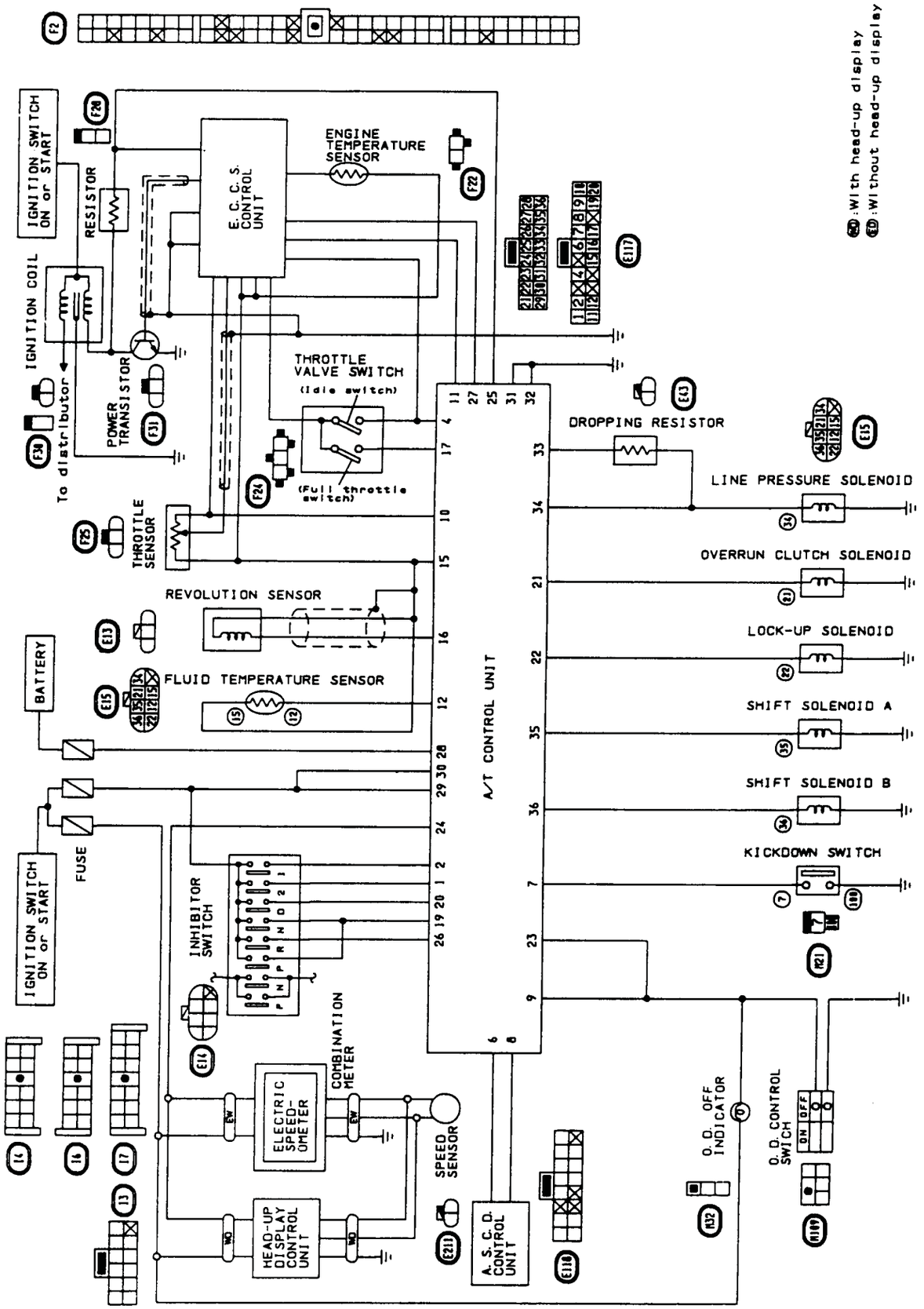

MAJOR OVERHAUL

Locations of Needle Bearings, Thrust Washers and Snap Rings

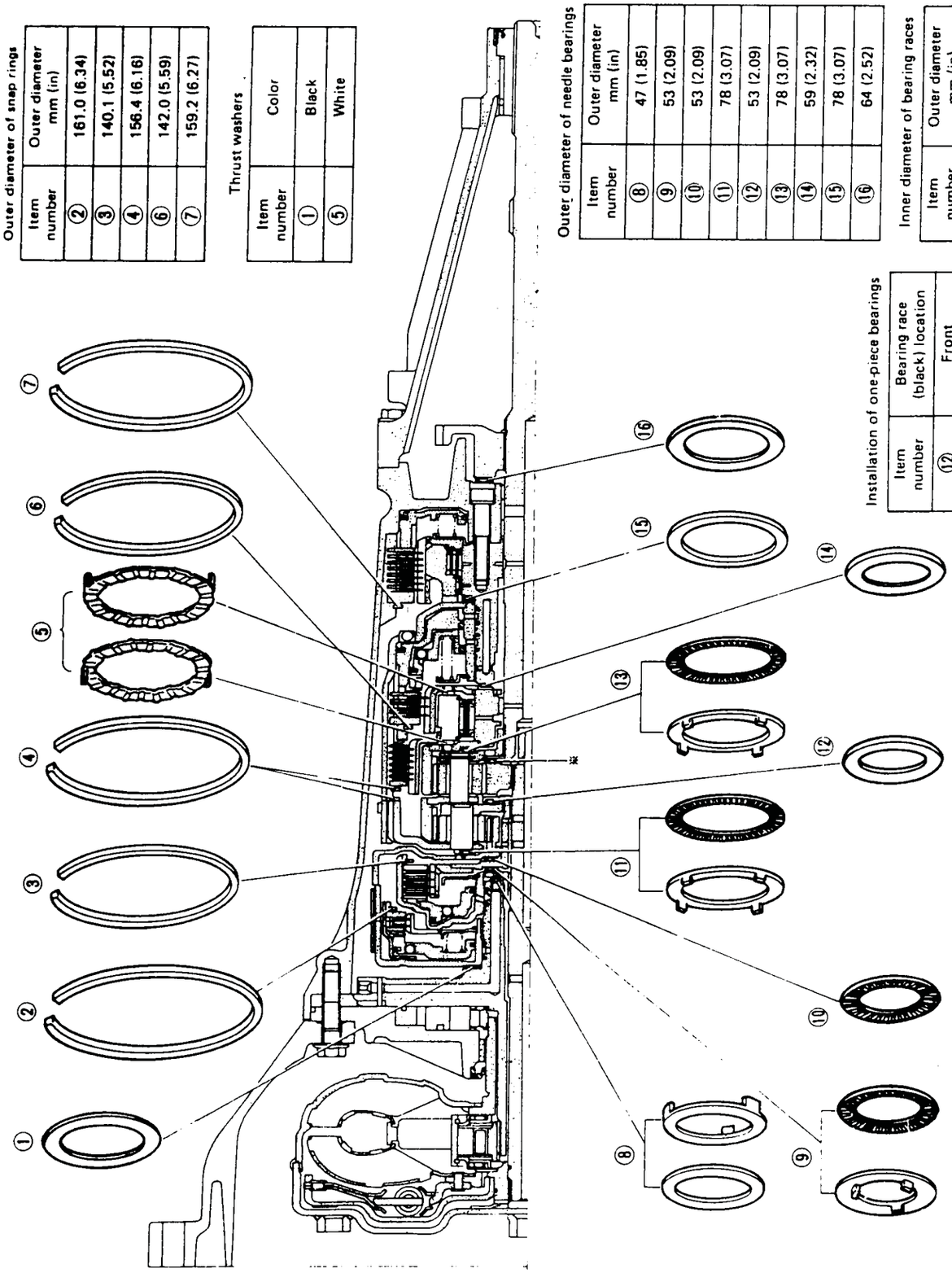

Outer diameter of snap rings

Item number	Outer diameter mm (in)
②	161.0 (6.34)
③	140.1 (5.52)
④	156.4 (6.16)
⑥	142.0 (5.59)
⑦	159.2 (6.27)

Thrust washers

Item number	Color
①	Black
⑤	White

Outer diameter of needle bearings

Item number	Outer diameter mm (in)
⑧	47 (1.85)
⑨	53 (2.09)
⑩	53 (2.09)
⑪	78 (3.07)
⑫	53 (2.09)
⑬	78 (3.07)
⑭	59 (2.32)
⑮	78 (3.07)
⑯	64 (2.52)

Inner diameter of bearing races

Item number	Outer diameter mm (in)
⑪	58 (2.28)
⑬	58.8 (2.315)

Installation of one-piece bearings

Item number	Bearing race (black) location
⑫	Front
⑬	Rear side
⑯	Rear side

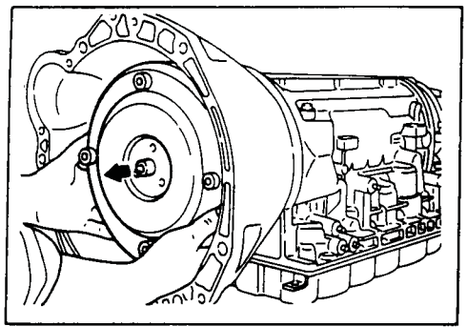

Disassembly

1. Remove torque converter by holding it firmly and turning while pulling straight out.

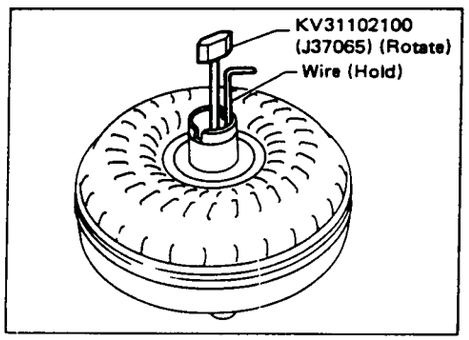

2. Check torque converter one-way clutch.
a. Insert Tool into spline of one-way clutch inner race.
b. Hook bearing support unitized with one-way clutch outer race with suitable wire.
c. Check that one-way clutch inner race rotates only clockwise with Tool while holding bearing support with wire.

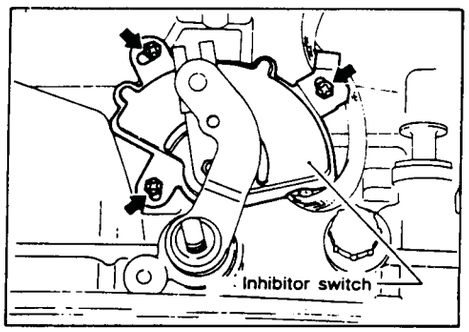

3. Remove inhibitor switch from transmission case.

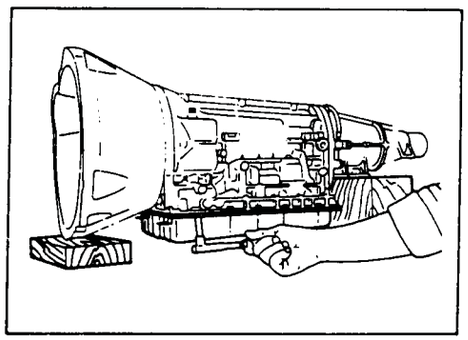

4. Remove oil pan.
a. Drain A.T.F. from rear extension.
b. Raise oil pan by placing wooden blocks under converter housing and rear extension.
c. Separate the oil pan and transmission case.
- **Always place oil pan straight down so that foreign particles inside will not move.**

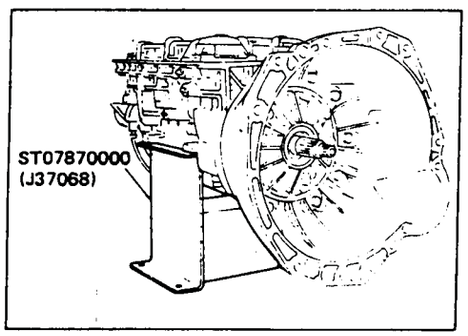

5. Place transmission into Tool with the control valve facing up.

Disassembly (Cont'd)

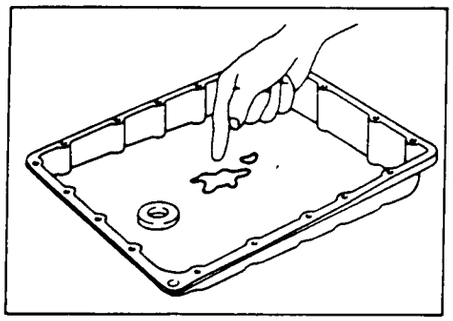

6. Check oil pan and oil strainer for accumulation of foreign particles.
- If materials of clutch facing are found, clutch plates may be worn.
- If metal filings are found, clutch plates, brake bands, etc. may be worn.
- If aluminum filings are found, bushings or aluminum cast parts may be worn.

In above cases, replace torque converter and check unit for cause of particle accumulation.

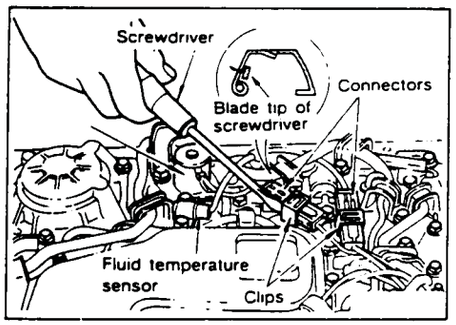

7. Remove lock-up solenoid and fluid temperature sensor connectors.
- **Be careful not to damage connector.**

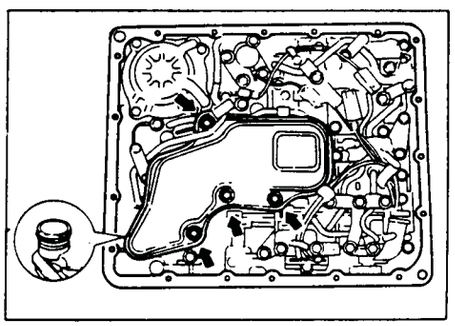

8. Remove oil strainer.
a. Remove oil strainer from control valve assembly. Then remove O-ring from oil strainer.

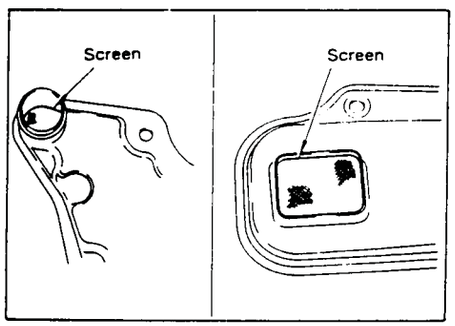

b. Check oil strainer screen for damage.

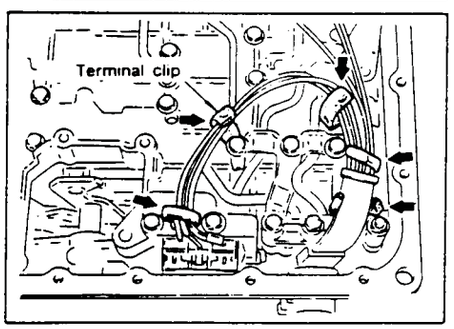

9. Remove control valve assembly.
a. Straighten terminal clips to free terminal cords then remove terminal clips.

Disassembly (Cont'd)

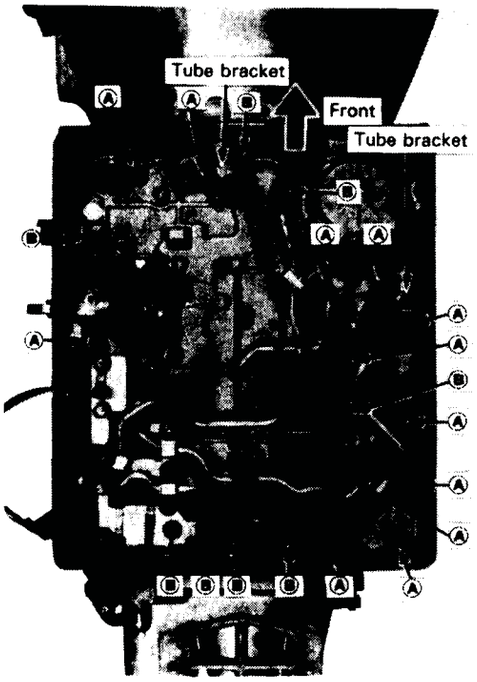

b. Remove bolts Ⓐ and Ⓑ, and remove control valve assembly from transmission.

Bolt	Length
Ⓐ	37 mm (1.46 in)
Ⓑ	50 mm (1.97 in)

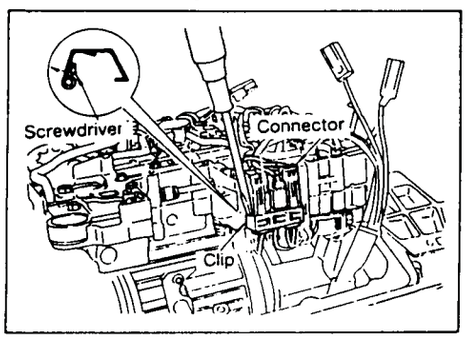

c. Remove solenoid connector.
- **Be careful not to damage connector.**

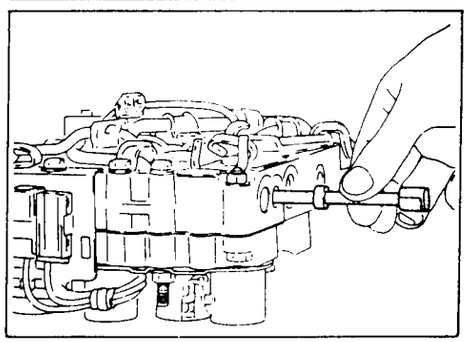

d. Remove manual valve from control valve assembly.

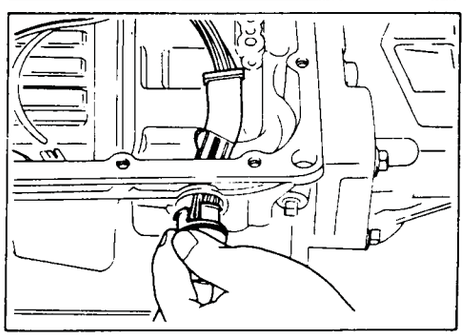

10. Remove terminal cord assembly from transmission case while pushing on stopper.
- **Be careful not to damage cord.**
- **Do not remove terminal cord assembly unless it is damaged.**

Disassembly (Cont'd)

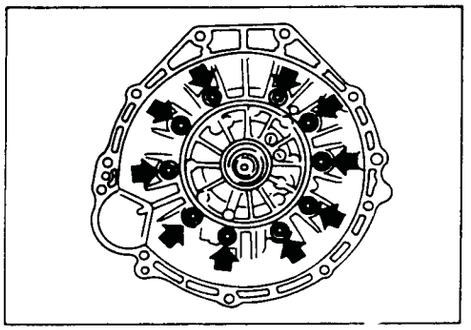

11. Remove converter housing.
a. Remove converter housing from transmission case.

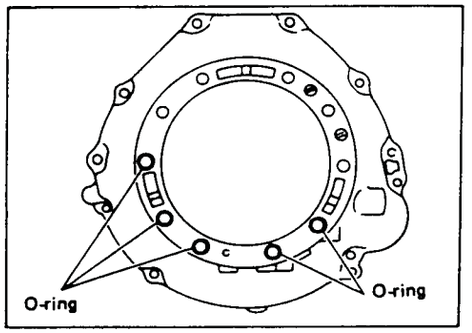

b. Remove O-rings from converter housing.
c. Remove traces of sealant.
- **Be careful not to scratch converter housing.**

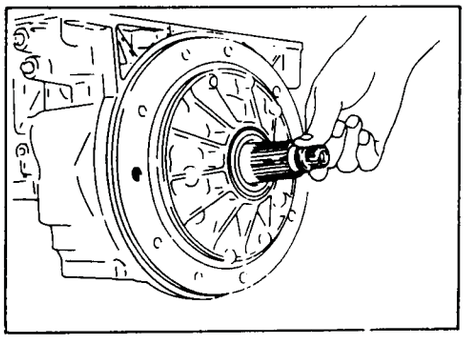

12. Remove O-ring from input shaft.

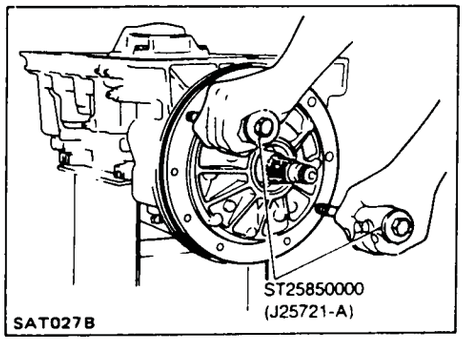

13. Remove oil pump assembly.
a. Attach Tool to oil pump assembly and extract it evenly from transmission case.

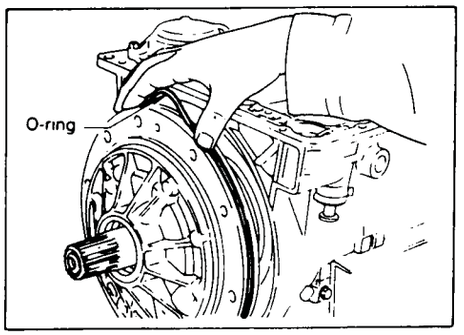

b. Remove O-ring from oil pump assembly.
c. Remove traces of sealant from oil pump housing.
- **Be careful not to scratch pump housing.**

Disassembly (Cont'd)

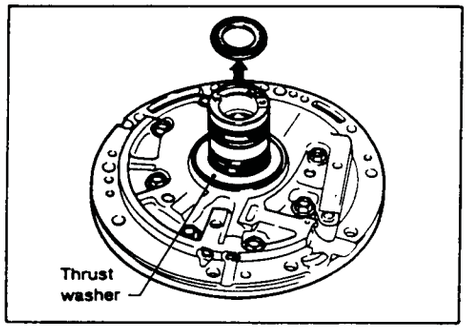

d. Remove needle bearing and thrust washer from oil pump assembly.

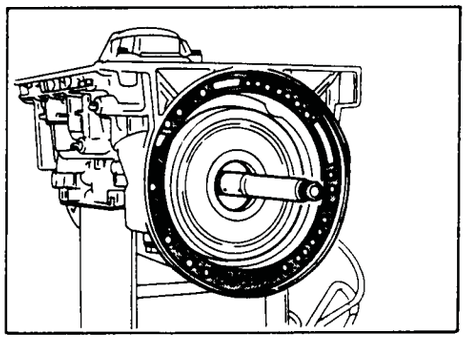

14. Remove input shaft and oil pump gasket.

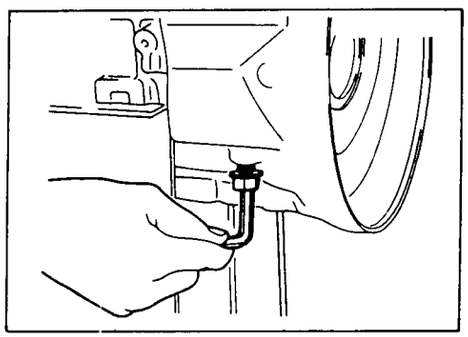

15. Remove brake band and band strut.

a. Loosen lock nut and remove band servo anchor end pin from transmission case.

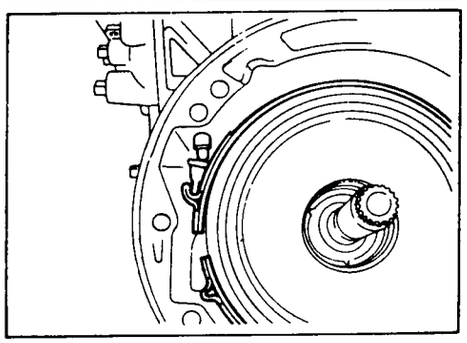

b. Remove brake band and band strut from transmission case.

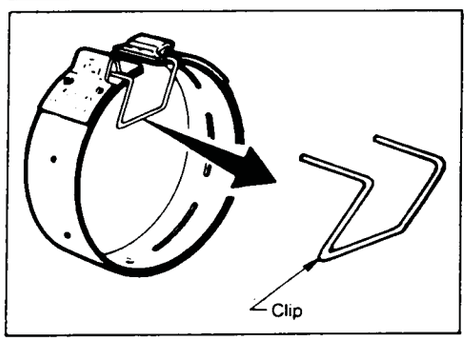

c. Hold brake band in a circular shape with clip.

Disassembly (Cont'd)

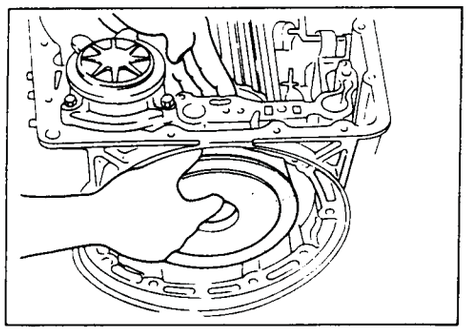

16. Remove front side clutch and gear components.
a. Remove clutch pack (reverse clutch, high clutch and front sun gear) from transmission case.

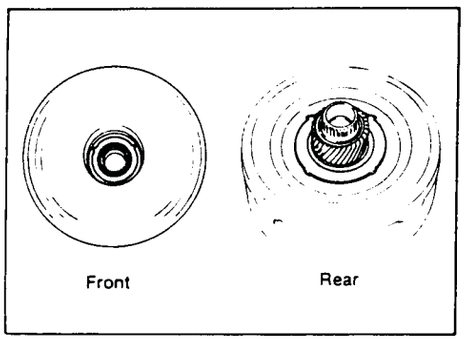

b. Remove front bearing race from clutch pack.
c. Remove rear bearing race from clutch pack.

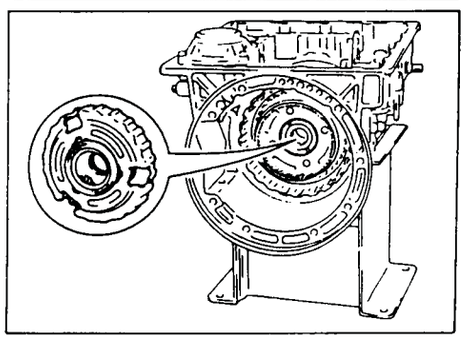

d. Remove front planetary carrier from transmission case.

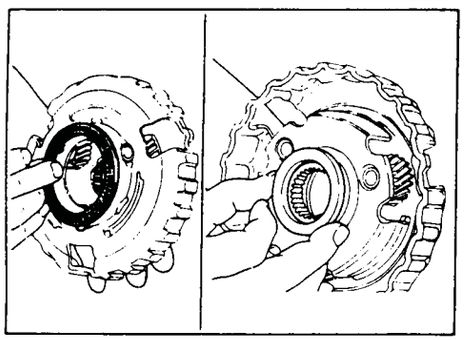

e. Remove front needle bearing from front planetary carrier.
f. Remove rear bearing from front planetary carrier.

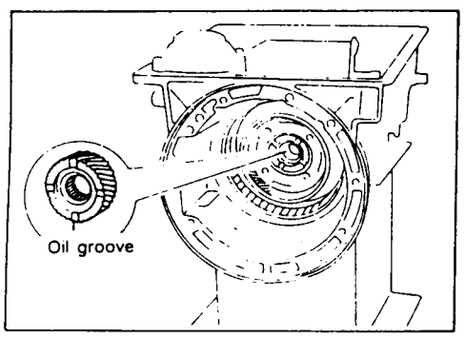

g. Remove rear sun gear from transmission case.

Disassembly (Cont'd)

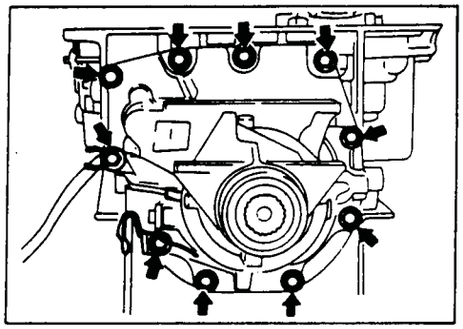

17. Remove rear extension.
a. Remove rear extension from transmission case.
b. Remove rear extension gasket from transmission case.

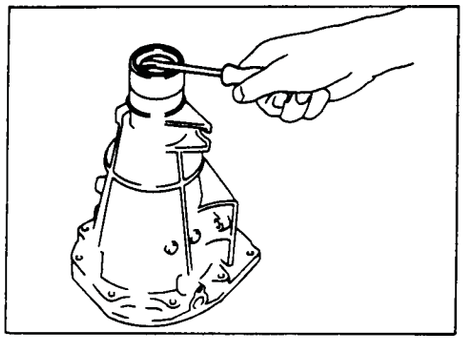

c. Remove oil seal from rear extension.
- **Do not remove oil seal unless it is to be replaced.**

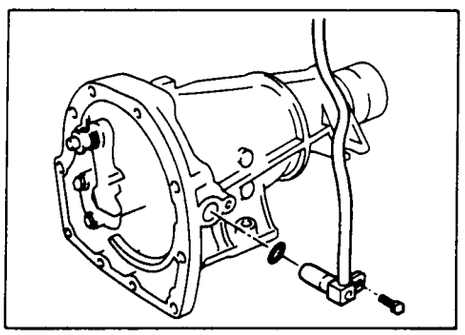

d. Remove revolution sensor from rear extension.
e. Remove O-ring from revolution sensor.

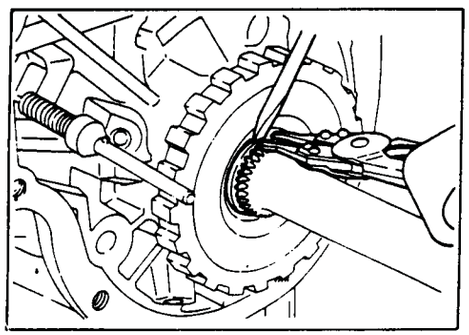

18. Remove output shaft and parking gear.
a. Remove rear snap ring from output shaft.

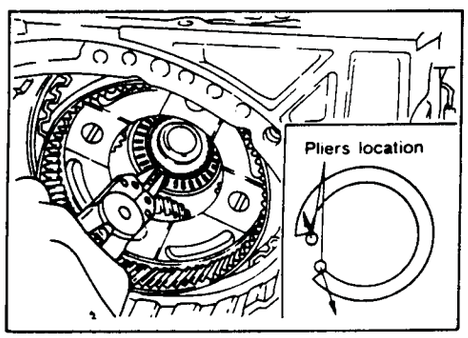

b. Slowly push output shaft all the way forward.
- **Do not use excessive force.**

c. Remove snap ring from output shaft.

Disassembly (Cont'd)

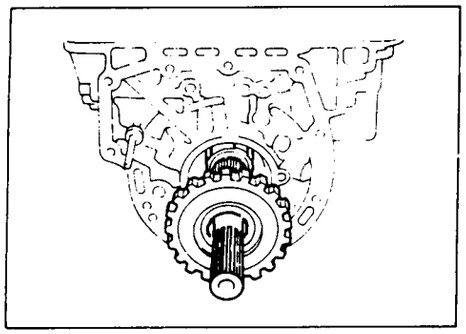

d. Remove output shaft and parking gear as a unit from transmission case.
e. Remove parking gear from output shaft.

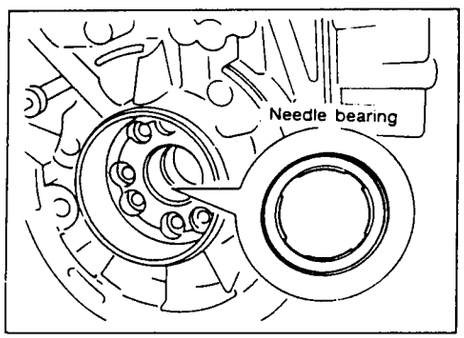

f. Remove needle bearing from transmission case.

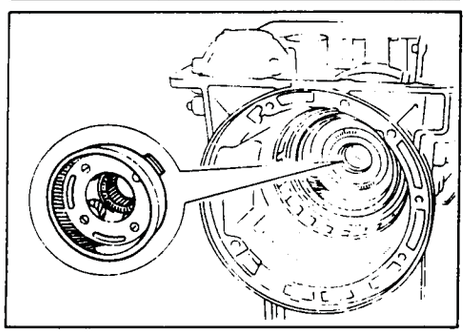

19. Remove rear side clutch and gear components.
a. Remove front internal gear.

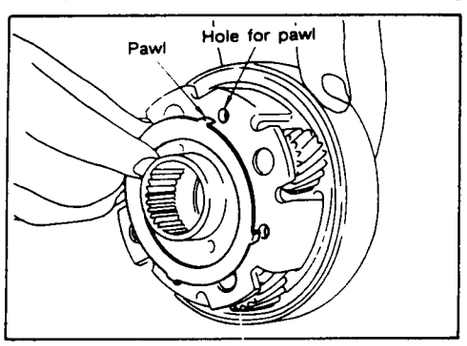

b. Remove bearing race from front internal gear.

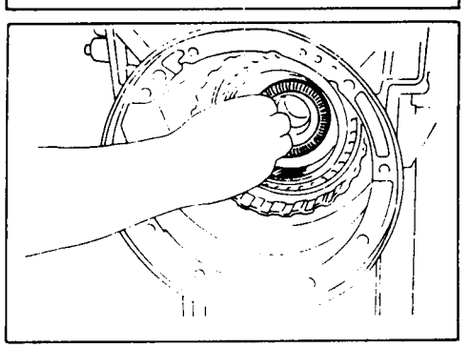

c. Remove needle bearing from rear internal gear.

Disassembly (Cont'd)

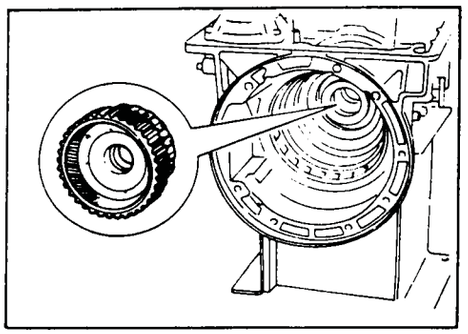

d. Remove rear internal gear, forward clutch hub and overrun clutch hub as a set from transmission case.

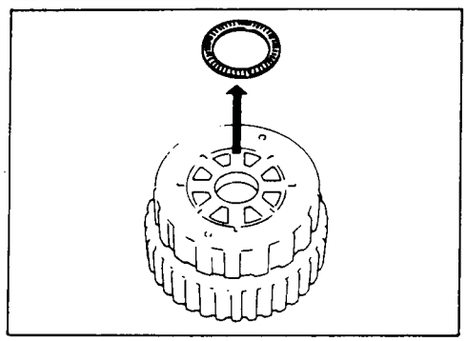

e. Remove needle bearing from overrun clutch hub.

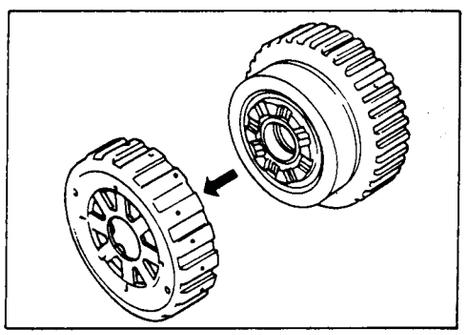

f. Remove overrun clutch hub from rear internal gear and forward clutch hub.

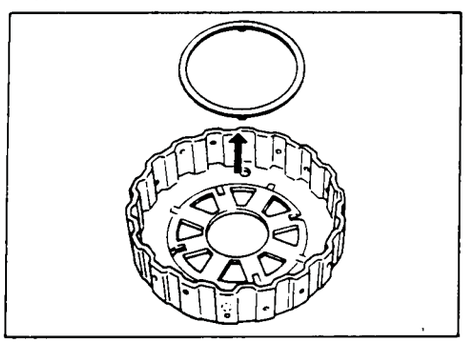

g. Remove thrust washer from overrun clutch hub.

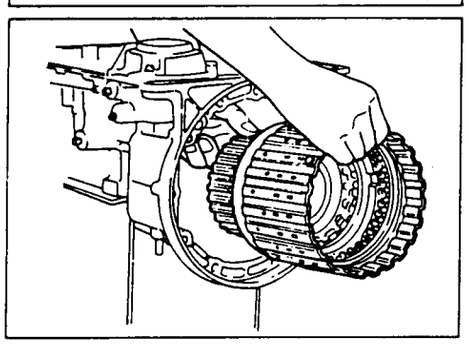

h. Remove forward clutch assembly from transmission case.

Disassembly (Cont'd)

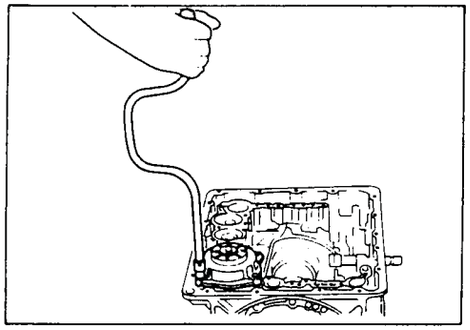

20. Remove band servo and accumulator components.
a. Remove band servo retainer from transmission case.

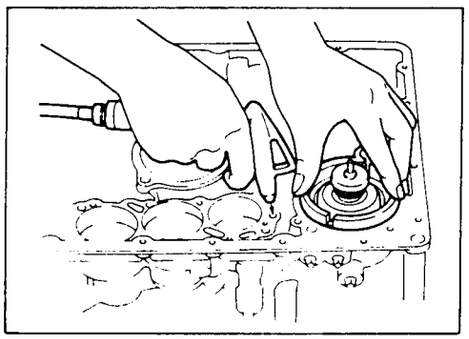

b. Apply compressed air to oil hole until band servo piston comes out of transmission case.
- **Hold piston with a rag and gradually direct air to oil hole.**

c. Remove return springs.

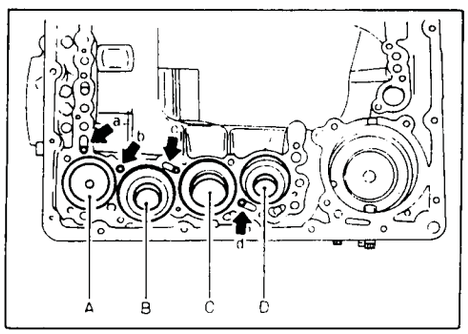

d. Remove springs from accumulator pistons B, C and D.
e. Apply compressed air to each oil hole until piston comes out.
- **Hold piston with a rag and gradually direct air to oil hole.**

Identification of accumulator pistons	A	B	C	D
Identification of oil holes	a	b	c	d

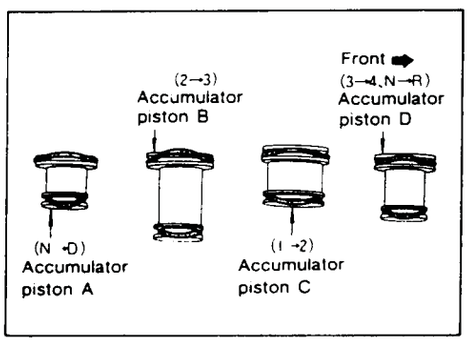

f. Remove O-ring from each piston.

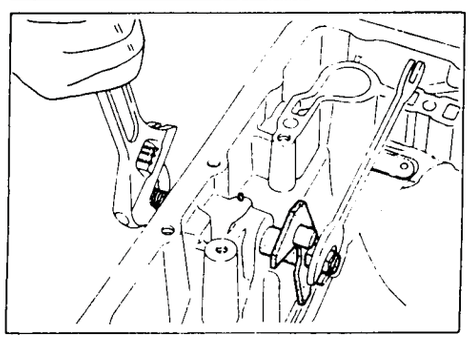

21. Remove manual shaft components, if necessary.
a. Hold width across flats of manual shaft (outside the transmission case) and remove lock nut from shaft.

Disassembly (Cont'd)

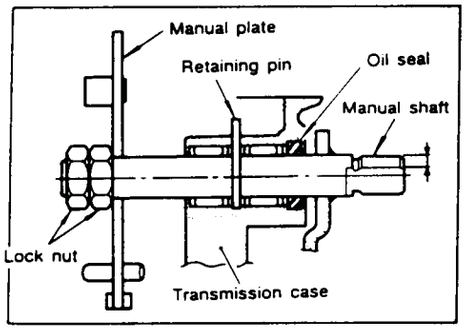

b. Remove retaining pin from transmission case.

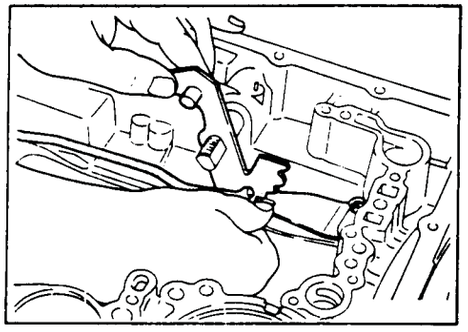

c. While pushing detent spring down, remove manual plate and parking rod from transmission case.

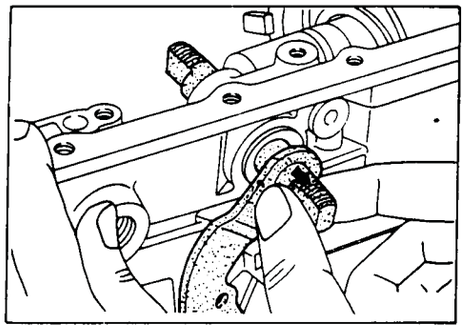

d. Remove manual shaft from transmission case.

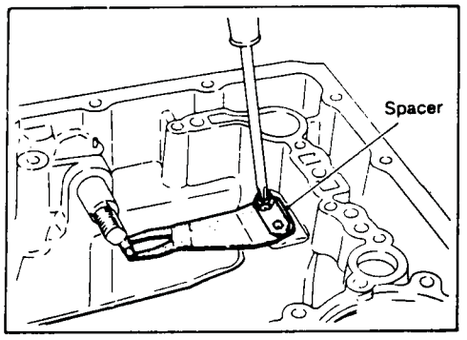

e. Remove spacer and detent spring from transmission case.

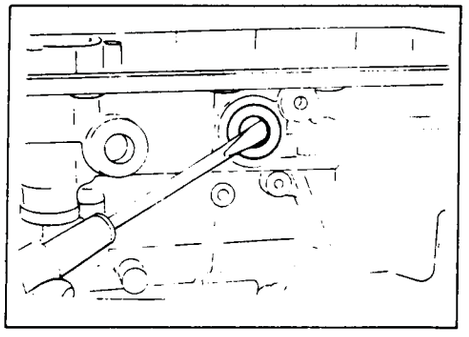

f. Remove oil seal from transmission case.

Oil Pump

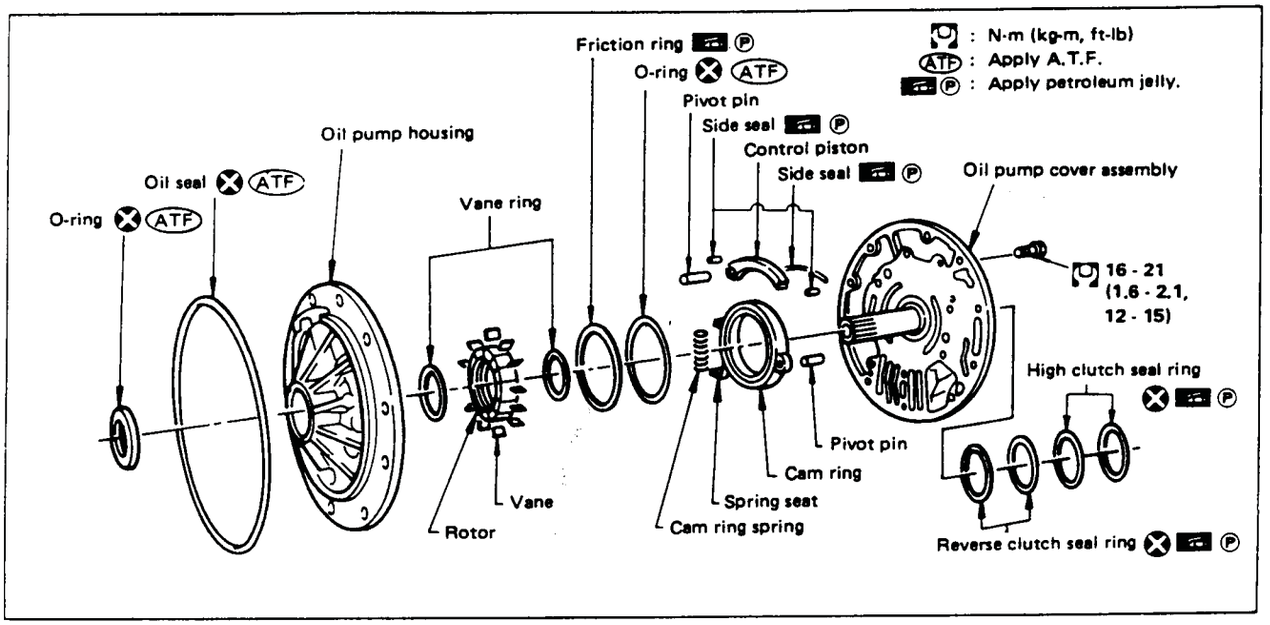

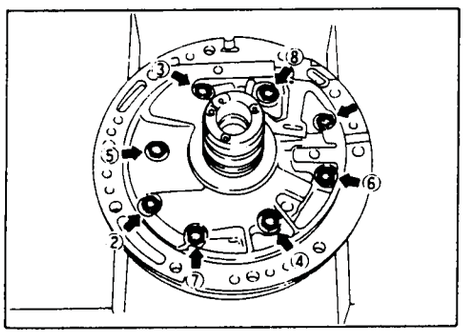

DISASSEMBLY

1. Loosen bolts in numerical order and remove oil pump cover.

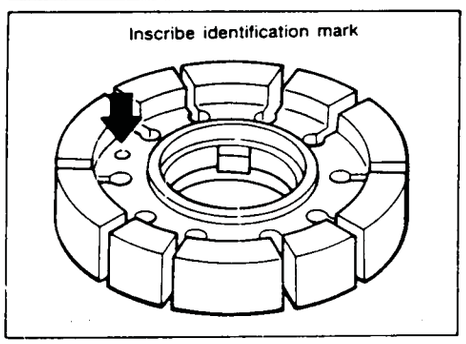

2. Remove rotor, vane rings and vanes.
   - **Inscribe a mark on back of rotor for identification of fore-aft direction when reassembling rotor. Then remove rotor.**

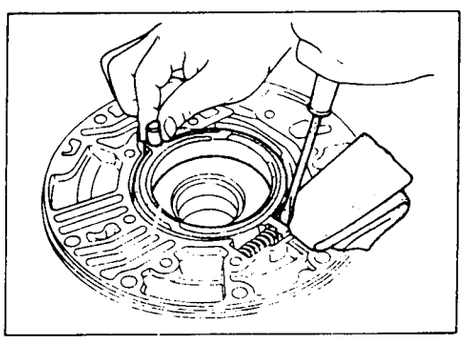

3. While pushing on cam ring remove pivot pin.
   - **Be careful not to scratch oil pump housing.**

Oil Pump (Cont'd)

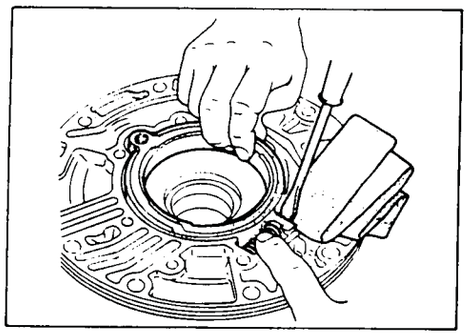

4. While holding cam ring and spring lift out cam ring spring.
- **Be careful not to damage oil pump housing.**
- **Hold cam ring spring to prevent it from jumping.**

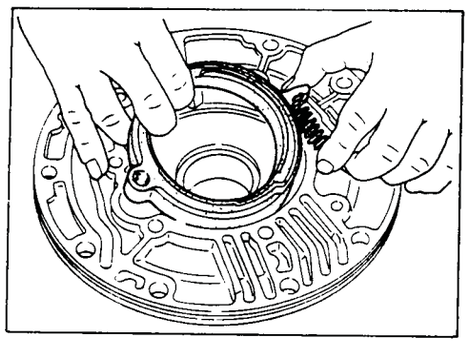

5. Remove cam ring and cam ring spring from oil pump housing.

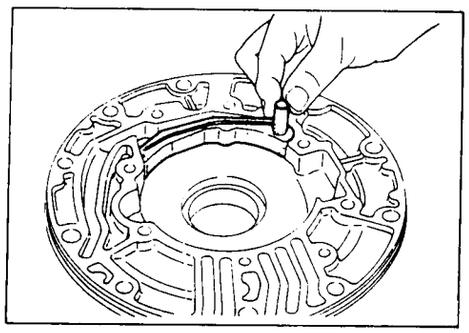

6. Remove pivot pin from control piston and remove control piston assembly.

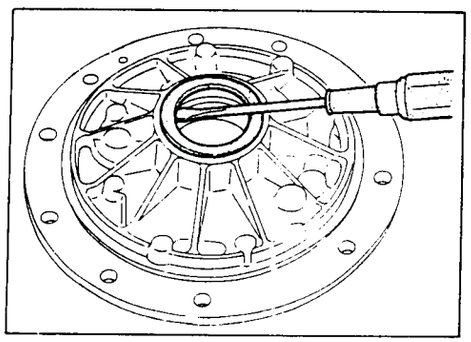

7. Remove oil seal from oil pump housing.
- **Be careful not to scratch oil pump housing.**

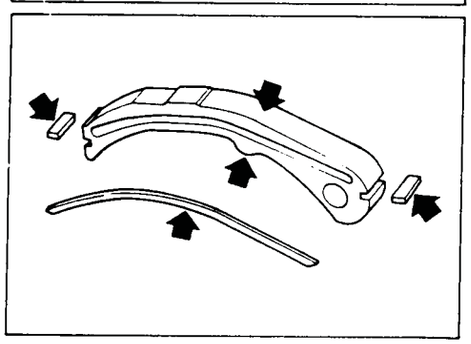

INSPECTION

Oil pump cover, rotor, vanes, control piston, side seals, cam ring and friction ring

- Check for wear or damage.

Oil Pump (Cont'd)

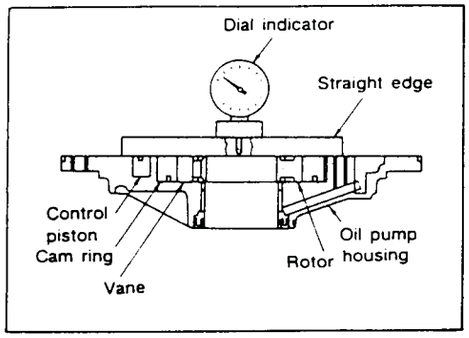

Side clearances

- Measure side clearances between end of oil pump housing and cam ring, rotor, vanes and control piston in at least four places along their circumferences. Maximum measured values should be within specified ranges.
- **Before measuring side clearance, check that friction rings, O-ring, control piston side seals and cam ring springs are removed.**

  Standard clearance:

  Cam ring

  0.01 - 0.024 mm (0.0004 - 0.0009 in)

  Rotor, vanes, control piston

  0.03 - 0.044 mm (0.0012 - 0.0017 in)
- If not within standard clearance, replace oil pump assembly except oil pump cover assembly.

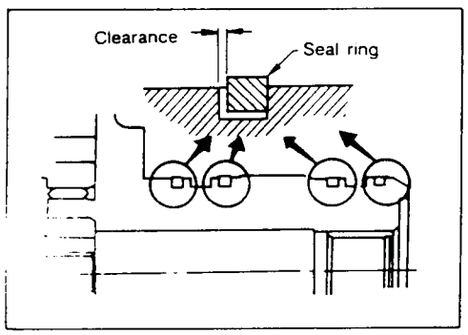

Seal ring clearance

- Measure clearance between seal ring and ring groove.

  Standard clearance:

  0.10 - 0.25 mm (0.0039 - 0.0098 in)

  Wear limit:

  0.25 mm (0.0098 in)
- If not within wear limit, replace oil pump cover assembly.

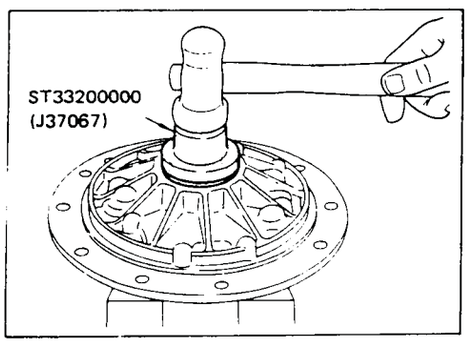

ASSEMBLY

1. Drive oil seal into oil pump housing.
- **Apply A.T.F. to outer periphery and lip surface.**

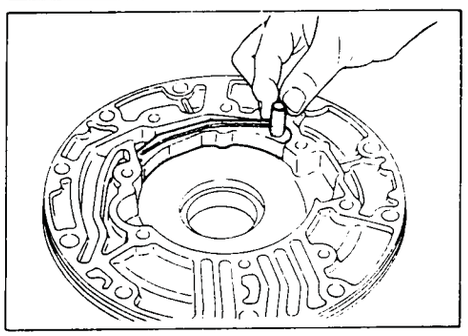

2. Install cam ring in oil pump housing by the following stops.

a. Install side seal on control piston.
- **Pay attention to its direction — Black surface goes toward control piston.**
- **Apply petroleum jelly to side seal.**

b. Install control piston on oil pump

Oil Pump (Cont'd)

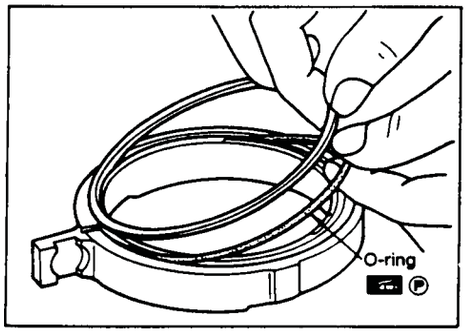

c. Install O-ring and friction ring on cam ring.
- **Apply petroleum jelly to O-ring.**

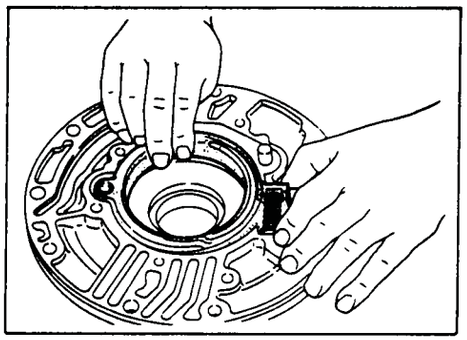

d. Assemble cam ring, cam ring spring and spring seat. Install spring by pushing it against pump housing.

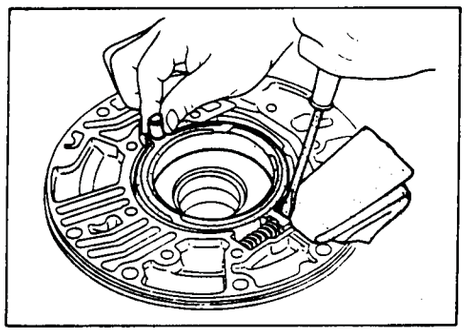

e. While pushing on cam ring install pivot pin.

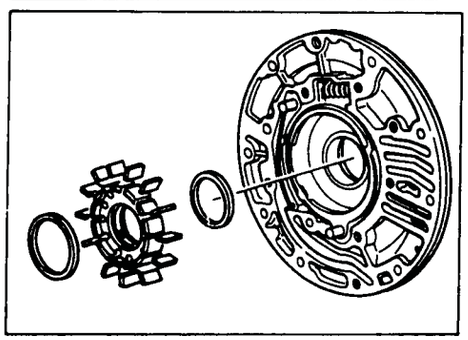

3. Install rotor, vanes and vane rings.
- **Pay attention to direction of rotor.**

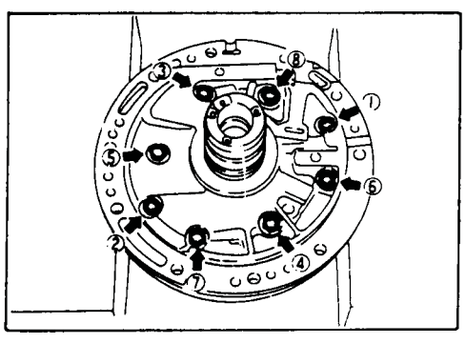

4. Install oil pump housing and oil pump cover.
a. Wrap masking tape around splines of oil pump cover assembly to protect seal. Position oil pump cover assembly in oil pump housing assembly, then remove masking tape.
b. Tighten bolts in a criss-cross pattern.

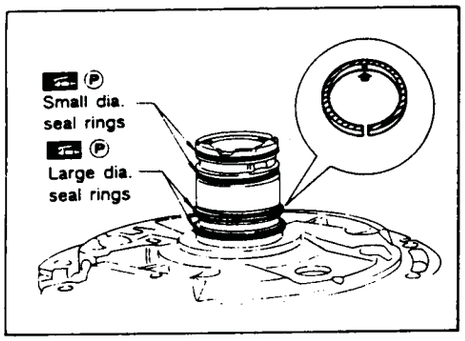

Oil Pump (Cont'd)

5. Install seal rings carefully after packing ring grooves with petroleum jelly. Press rings down into jelly to a close fit.

- **Seal rings come in two different diameters. Check fit carefully in each groove.**
  - **Small dia. seal ring:**
    - **No mark**
  - **Large dia. seal ring:**
    - **Yellow mark in area shown by arrow**
- **Do not spread gap of seal ring excessively while installing. It may deform ring.**

Control Valve Assembly

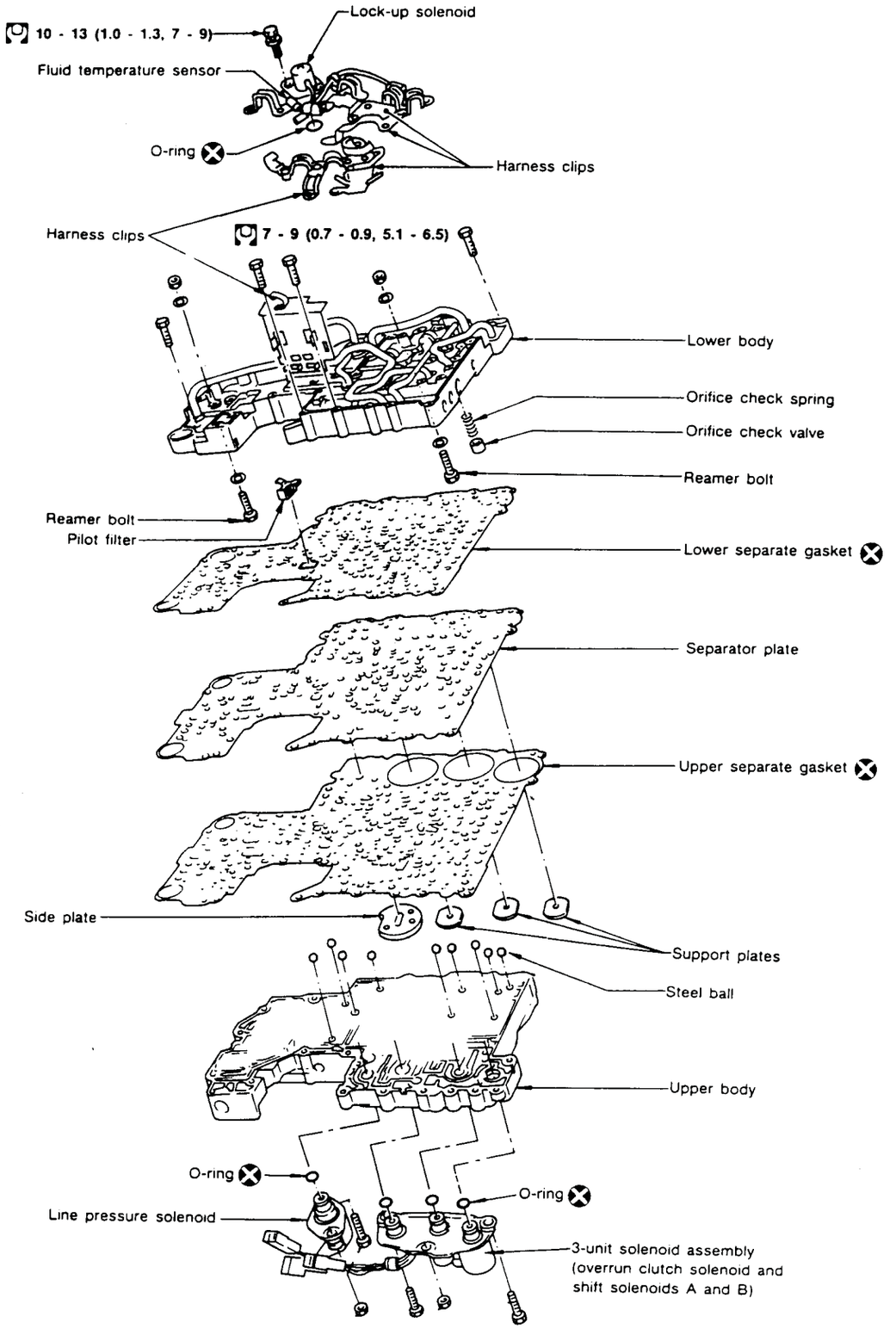

: N·m (kg-m, ft-lb)

Control Valve Assembly (Cont'd)

DISASSEMBLY

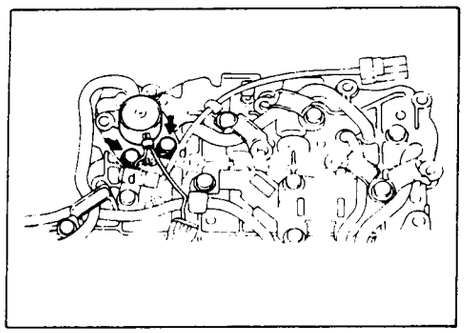

1. Remove solenoids.
a. Remove lock-up solenoid and side plate from lower body.
b. Remove O-ring from solenoid.

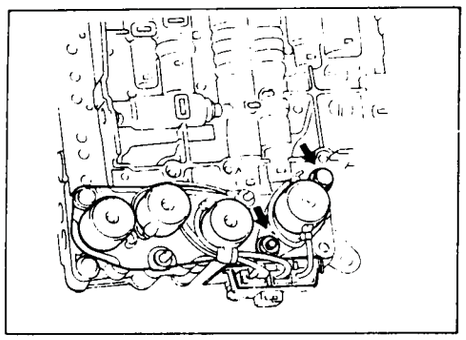

c. Remove line pressure solenoid from upper body.
d. Remove O-ring from solenoid.

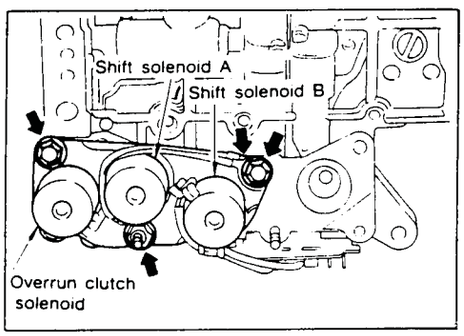

e. Remove 3-unit solenoid assembly from upper body.
f. Remove O-rings from solenoids.

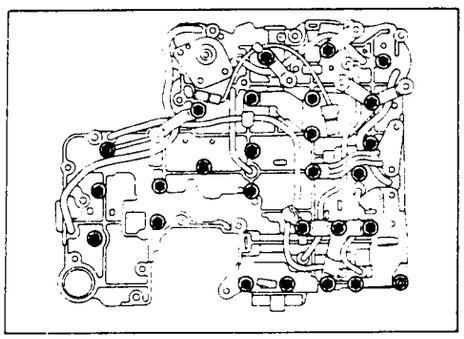

2. Disassemble upper and lower bodies.
a. Place upper body facedown, and remove bolts, reamer bolts and support plates.
b. Remove lower body, separator plate and separate gasket as a unit from upper body.
- **Be careful not to drop pilot filter, orifice check valve, spring and steel balls.**

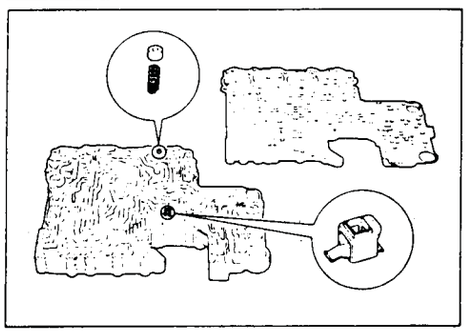

c. Place lower body facedown, and remove separate gasket and separator plate.
d. Remove pilot filter, orifice check valve and orifice check spring.

Control Valve Assembly (Cont'd)

e. Check to see that steel balls are properly positioned in upper body and then remove them from upper body.

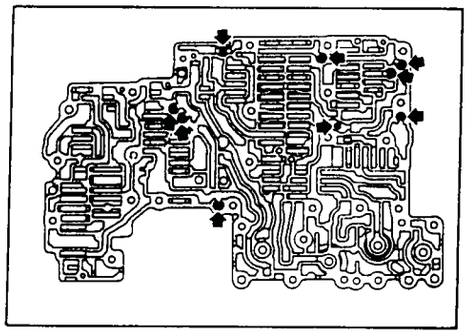

INSPECTION

Lower and upper bodies

- Check to see that there are pins and retainer plates in lower body.

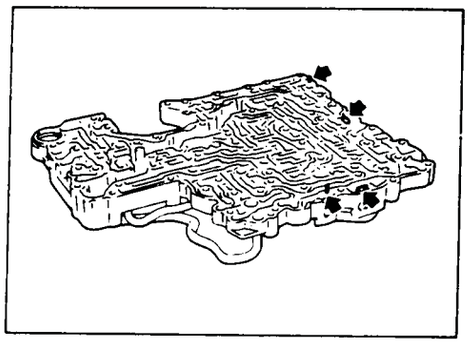

- Check to see that there are pins and retainer plates in upper body.
- **Be careful not to lose these parts.**

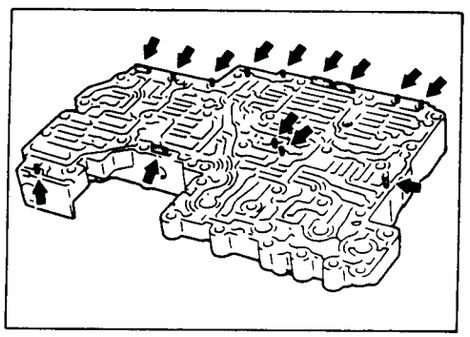

- Check to make sure that oil circuits are clean and free from damage.
- Check tube brackets and tube connectors for damage.

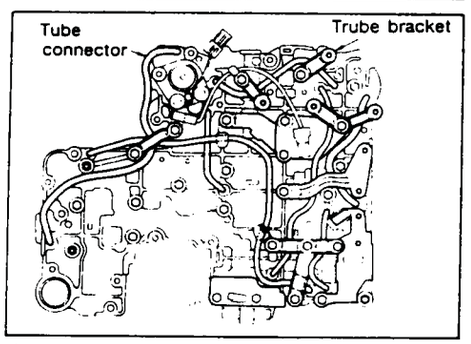

Separator plates

- Check to make sure that separator plate is free of damage and not deformed and oil holes are clean.

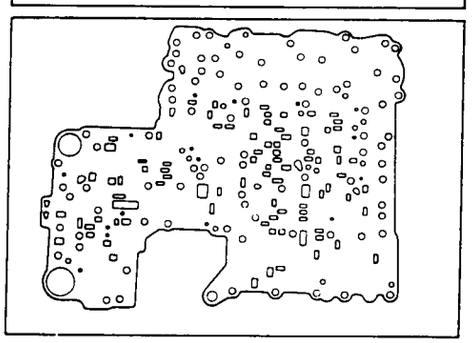

Control Valve Assembly (Cont'd)

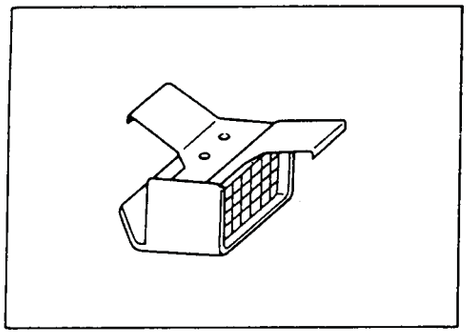

Pilot filter

- Check to make sure that filter is not clogged or damaged.

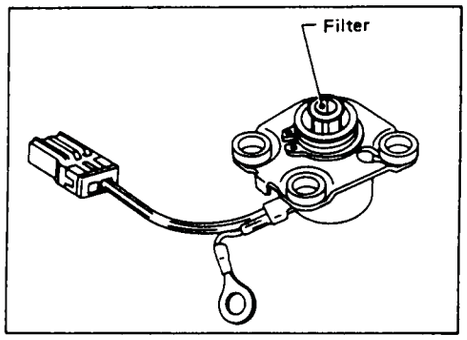

Lock-up solenoid

- Check that filter is not clogged or damaged.
- Measure resistance. — Refer to "Electrical Components Inspection".

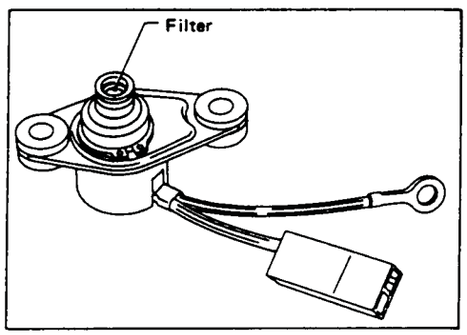

Line pressure solenoid

- Check that filter is not clogged or damaged.
- Measure resistance. — Refer to "Electrical Components Inspection".

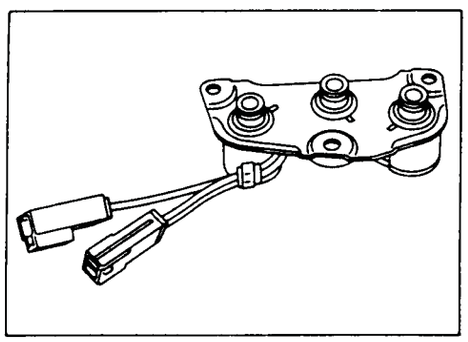

3-unit solenoid assembly (Overrun clutch solenoid and shift solenoids A and B)

- Measure resistance of each solenoid. — Refer to "Electrical Components Inspection".

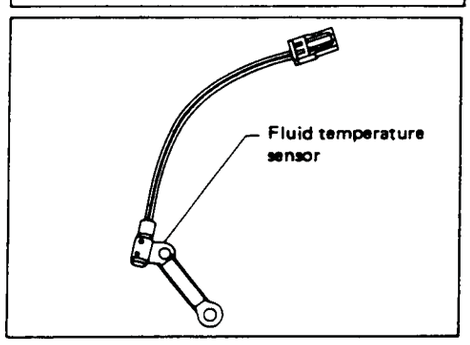

Fluid temperature sensor

- Measure resistance. — Refer to "Electrical Components Inspection".

Control Valve Assembly (Cont'd)

ASSEMBLY

1. Install upper and lower bodies.

a. Place oil circuit of upper body face up. Install steel balls in their proper positions.

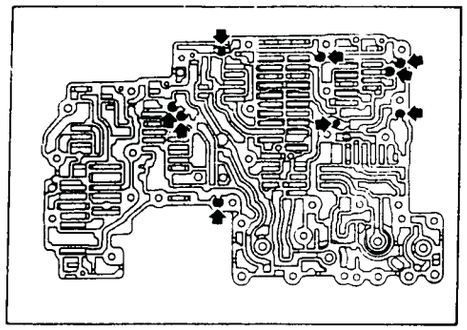

b. Install reamer bolts from bottom of upper body and install separate gaskets.

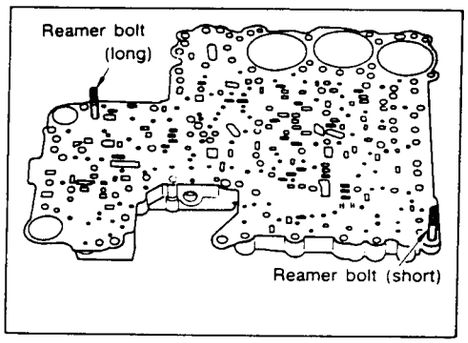

c. Place oil circuit of lower body face up. Install orifice check spring, orifice check valve and pilot filter.

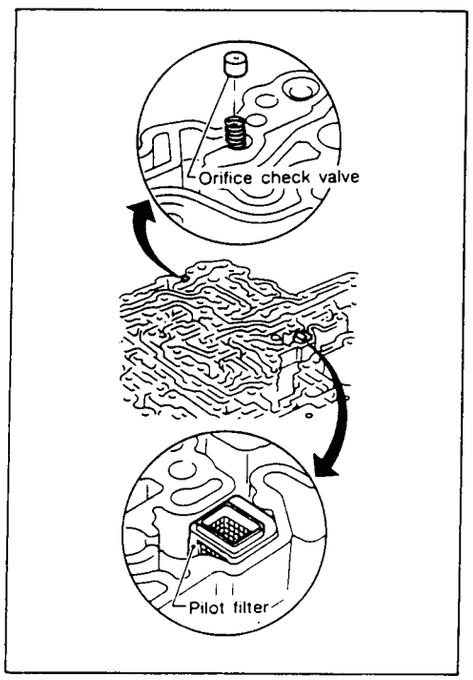

d. Install lower separate gaskets and separator plates on lower body.

e. Install and temporarily tighten support plates, fluid temperature sensor and tube brackets.

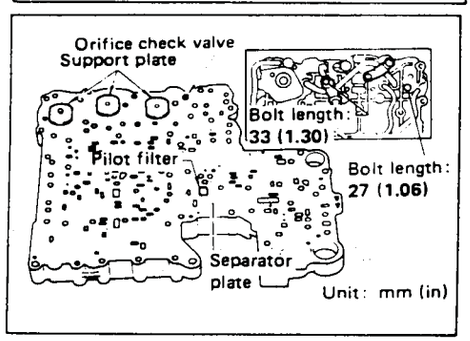

Control Valve Assembly (Cont'd)

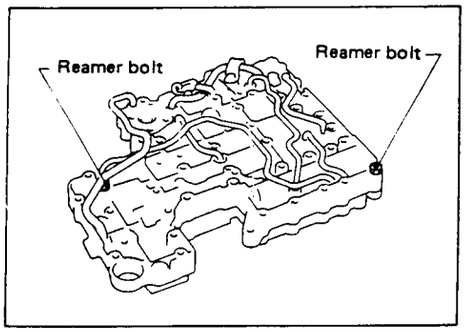

f. Temporarily assemble lower and upper bodies, using reamer bolt as a guide.

- **Be careful not to dislocate or drop steel balls, orifice check spring, orifice check valve and pilot filter.**

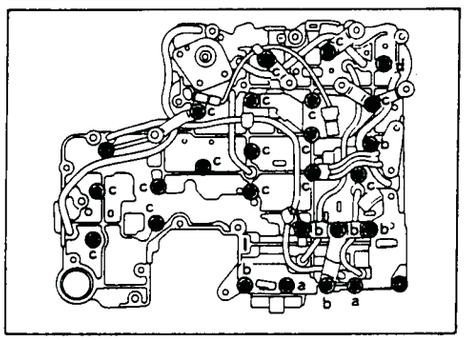

g. Install and temporarily tighten bolts and tube brackets in their proper locations.

Bolt length and location:

Item \ Bolt symbol	a	b	c	d
Bolt length mm (in)	70 (2.76)	50 (1.97)	33 (1.30)	27 (1.06)

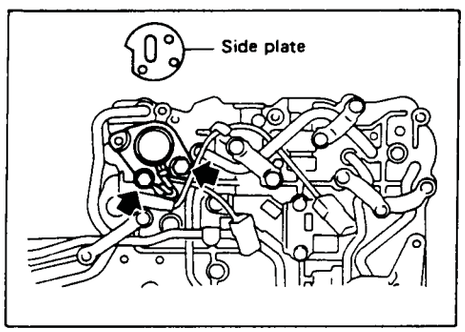

2. Install solenoids.

a. Attach O-ring and install lock-up solenoid and side plates onto lower body.

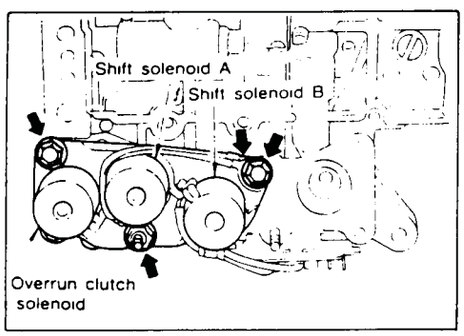

b. Attach O-rings and install 3-unit solenoids assembly onto upper body.

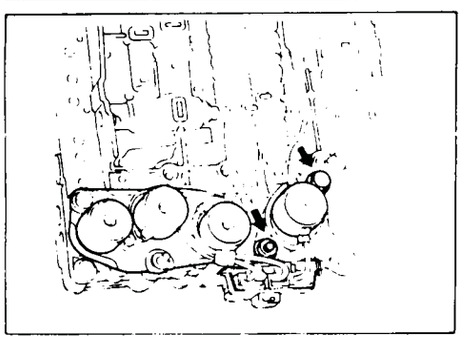

c. Attach O-ring and install line pressure solenoid onto upper body.

3. Tighten all bolts.

Control Valve Upper Body

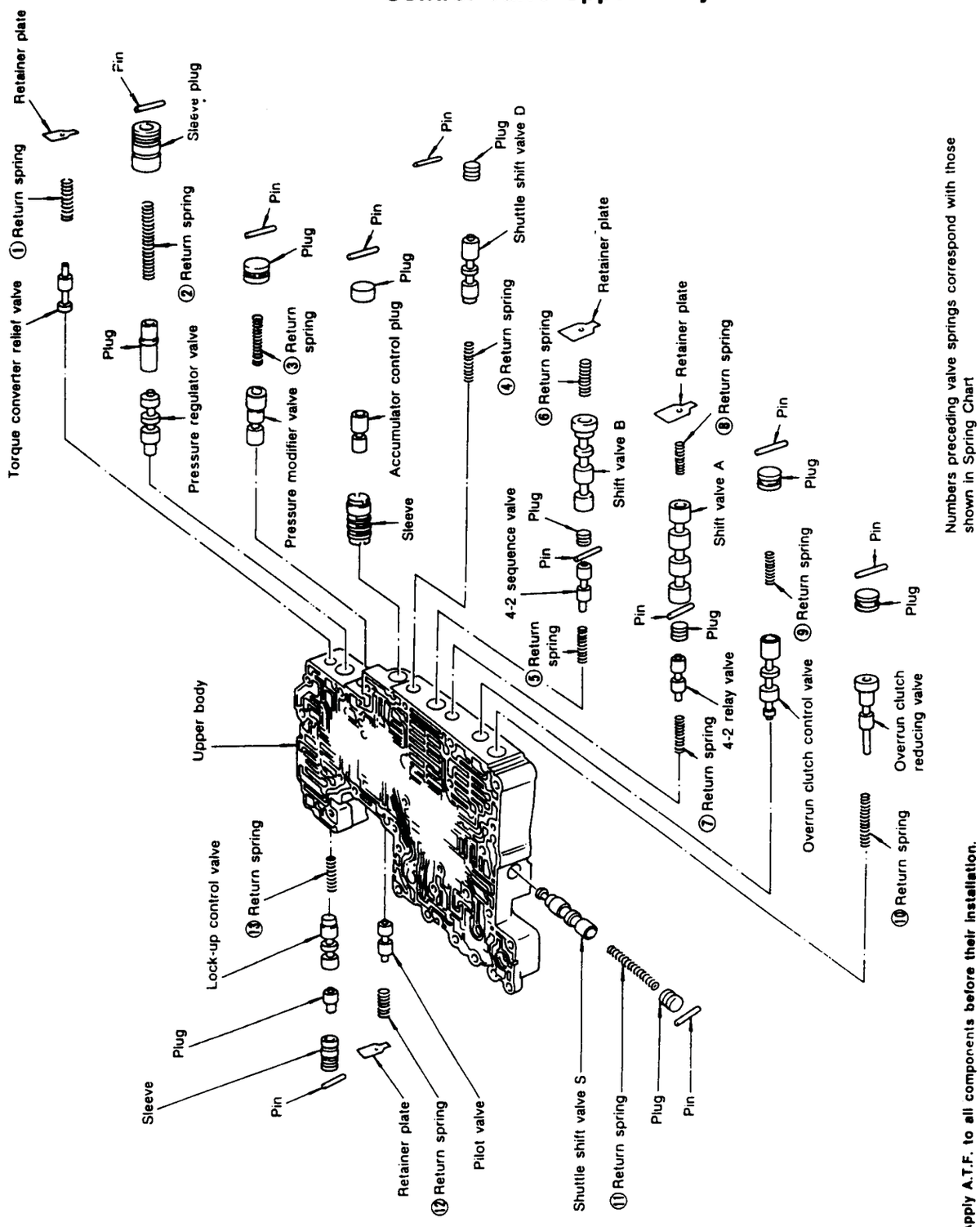

Numbers preceding valve springs correspond with those shown in Spring Chart

Apply A.T.F. to all components before their installation.

Control Valve Upper Body (Cont'd)

DISASSEMBLY

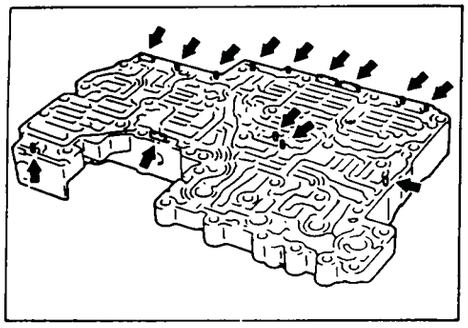

1. Remove valves at parallel pins.
- **Do not use a magnetic hand.**

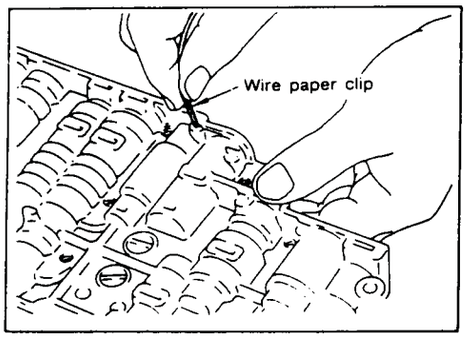

a. Use a wire paper clip to push out parallel pins.

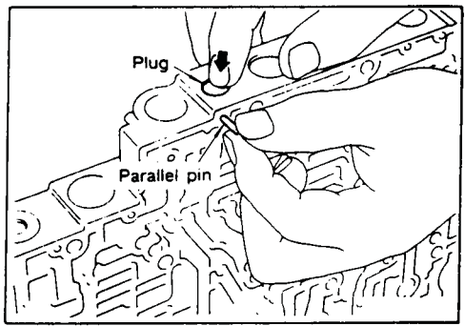

b. Remove parallel pins while pressing their corresponding plugs and sleeves.
- **Remove plug slowly to prevent internal parts from jumping out.**

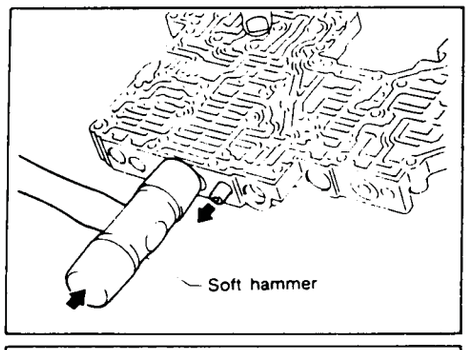

c. Place mating surface of valve facedown, and remove internal parts.
- **If a valve is hard to remove, place valve body facedown and lightly tap it with a soft hammer.**
- **Be careful not to drop or damage valves and sleeves.**

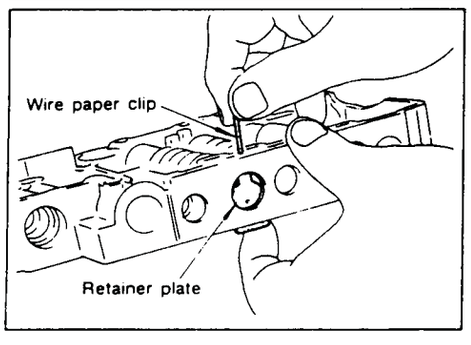

2. Remove valves at retainer plates.

a. Pry out retainer plate with wire paper clip.

Control Valve Upper Body (Cont'd)

b. Remove retainer plates while holding spring.

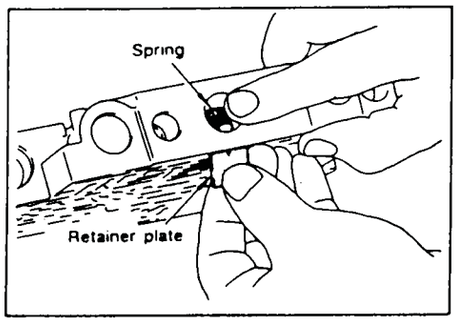

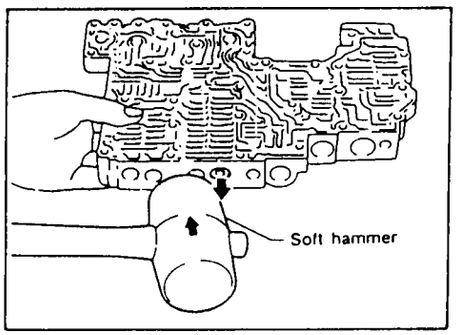

c. Place mating surface of valve facedown, and remove internal parts.

- **If a valve is hard to remove, lightly tap valve body with a soft hammer.**
- **Be careful not to drop or damage valves, sleeves, etc.**

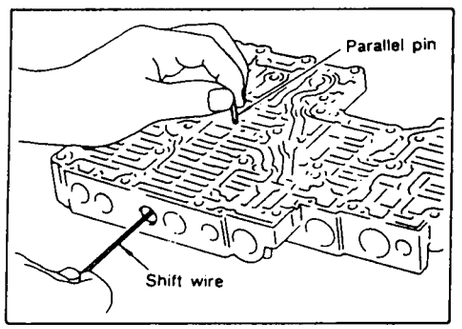

- 4-2 sequence valve and relay valve are located far back in upper body. If they are hard to remove, carefully push them out using stiff wire.
- **Be careful not to scratch sliding surface of valve with wire.**

INSPECTION

Valve springs

- Measure free length and outer diameter of each valve spring. Also check for damage or deformation.
- Numbers of each valve spring listed in table below

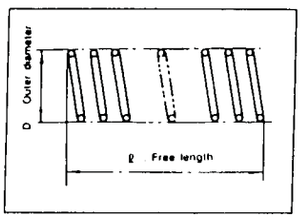

Inspection standard

Unit: mm (in)

Parts \ Item		Part No.	ℓ	D
①	Torque converter relief valve spring	31742-41X18	32.3 (1.272)	9.0 (0.354)
②	Pressure regulator valve spring	31742-41X16	61.5 (2.421)	8.9 (0.350)
③	Pressure modifier valve spring	31742-41X19	31.95 (1.2579)	6.8 (0.268)
④	Shuttle shift valve D spring	31762-41X00	26.5 (1.043)	6.0 (0.236)
⑤	4-2 sequence valve spring	31756-41X00	29.1 (1.146)	6.95 (0.2736)
⑥	Shift valve B spring	31762-41X01	25.0 (0.984)	7.0 (0.276)
⑦	4-2 relay valve spring	31756-41X00	29.1 (1.146)	6.95 (0.2736)
⑧	Shift valve A spring	31762-41X01	25.0 (0.984)	7.0 (0.276)
⑨	Overrun clutch control valve spring	31762-41X03	23.6 (0.929)	7.0 (0.276)
⑩	Overrun clutch reducing valve spring	31742-41X20	32.5 (1.280)	7.0 (0.276)
⑪	Shuttle shift valve S spring	31762-41X04	51.0 (2.008)	5.65 (0.2224)
⑫	Pilot valve spring	31742-41X13	25.7 (1.012)	9.1 (0.358)
⑬	Lock-up control valve spring	31742-41X22	18.5 (0.728)	13.0 (0.512)

- Replace valve springs if deformed or fatigued.

VALVE BODY LAYOUT

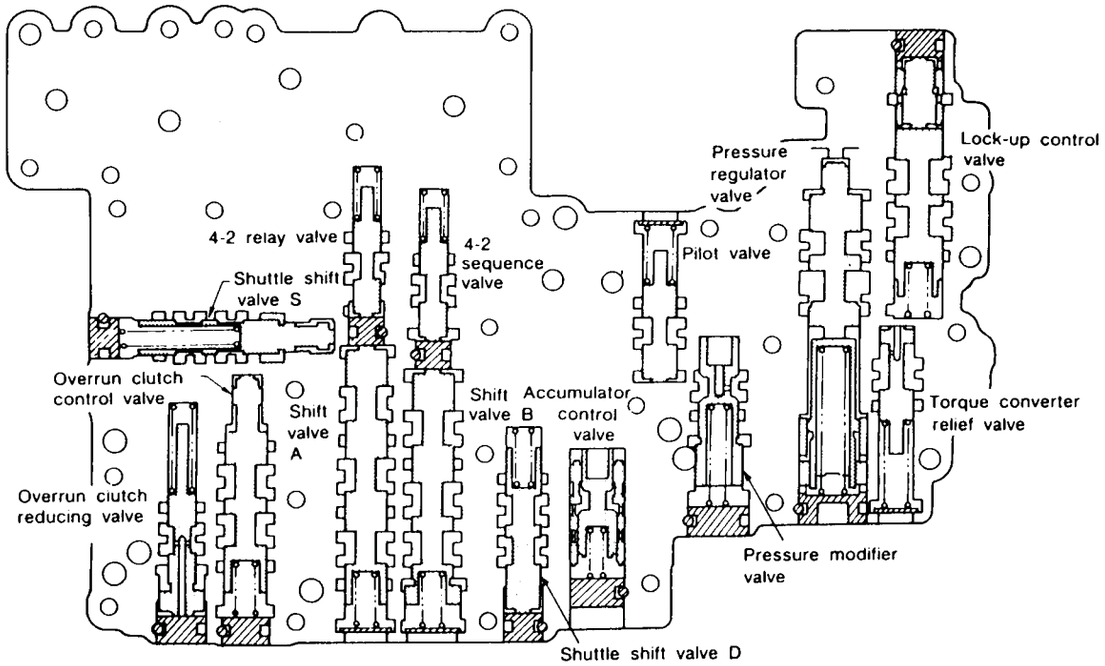

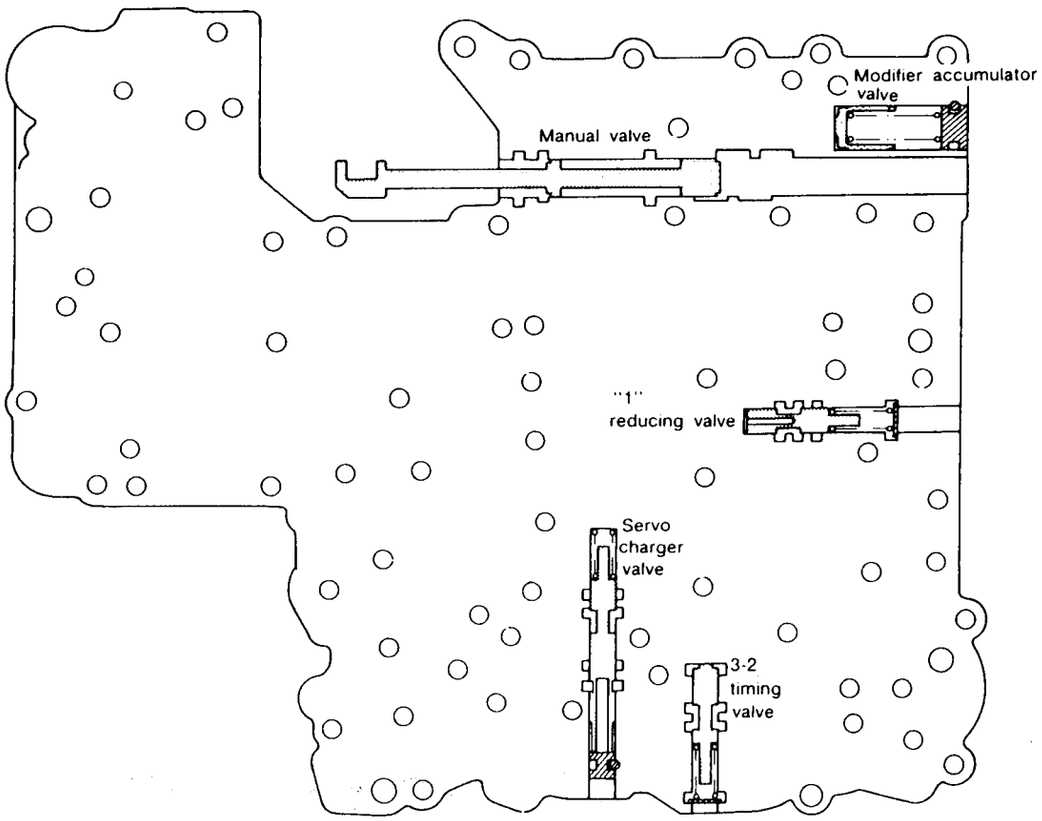

Control Valve Upper Body (Cont'd)

ASSEMBLY

1. Lubricate the control valve body and all valves with A.T.F. Install control valves by sliding them carefully into their bores.

- **Be careful not to scratch or damage valve body.**

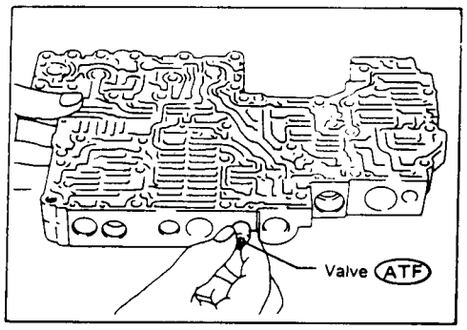

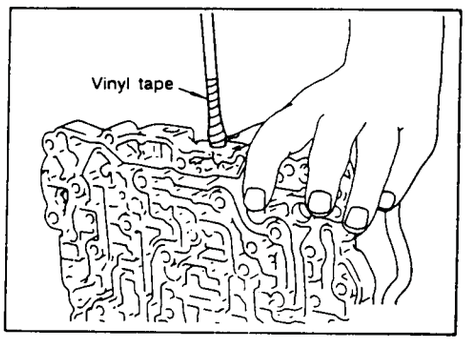

- Wrap a small screwdriver with vinyl tape and use it to insert the valves into proper position.

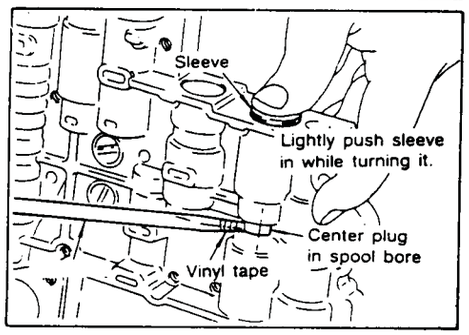

Pressure regulator valve

- If pressure regulator plug is not centered properly, sleeve cannot be inserted into bore in upper body.
  If this happens, use vinyl tape wrapped screwdriver to center sleeve until it can be inserted.
- Turn sleeve slightly while installing.

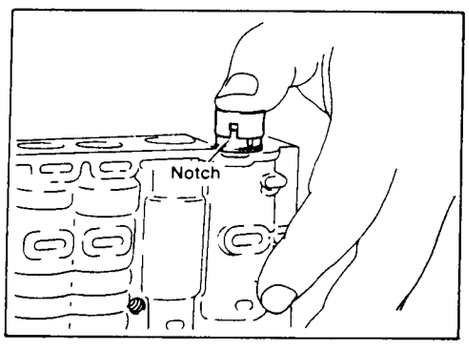

Accumulator control plug

- Align protrusion of accumulator control sleeve with notch in plug.
- Align parallel pin groove in plug with parallel pin, and install accumulator control valve.

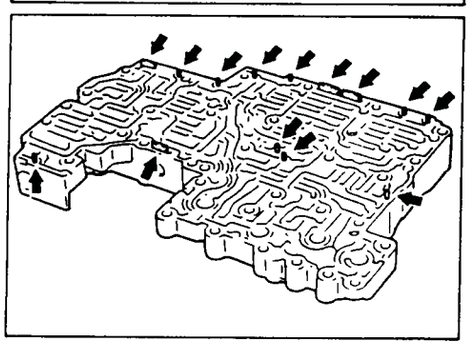

2. Install parallel pins and retainer plates.

Control Valve Upper Body (Cont'd)

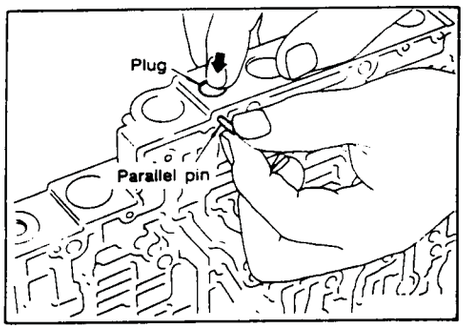

- **While pushing plug, install parallel pin.**

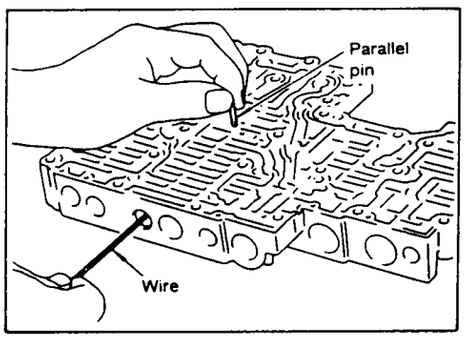

4-2 sequence valve and relay valve

- Push 4-2 sequence valve and relay valve with wire wrapped in vinyl tape to prevent scratching valve body. Install parallel pins.

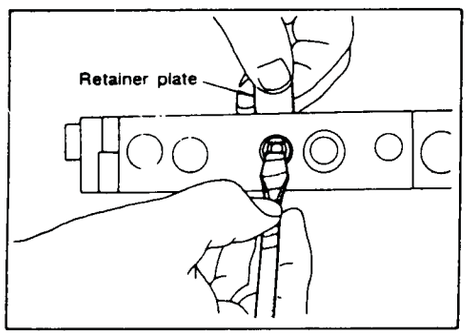

- Insert retainer plate while pushing spring.

Control Valve Lower Body

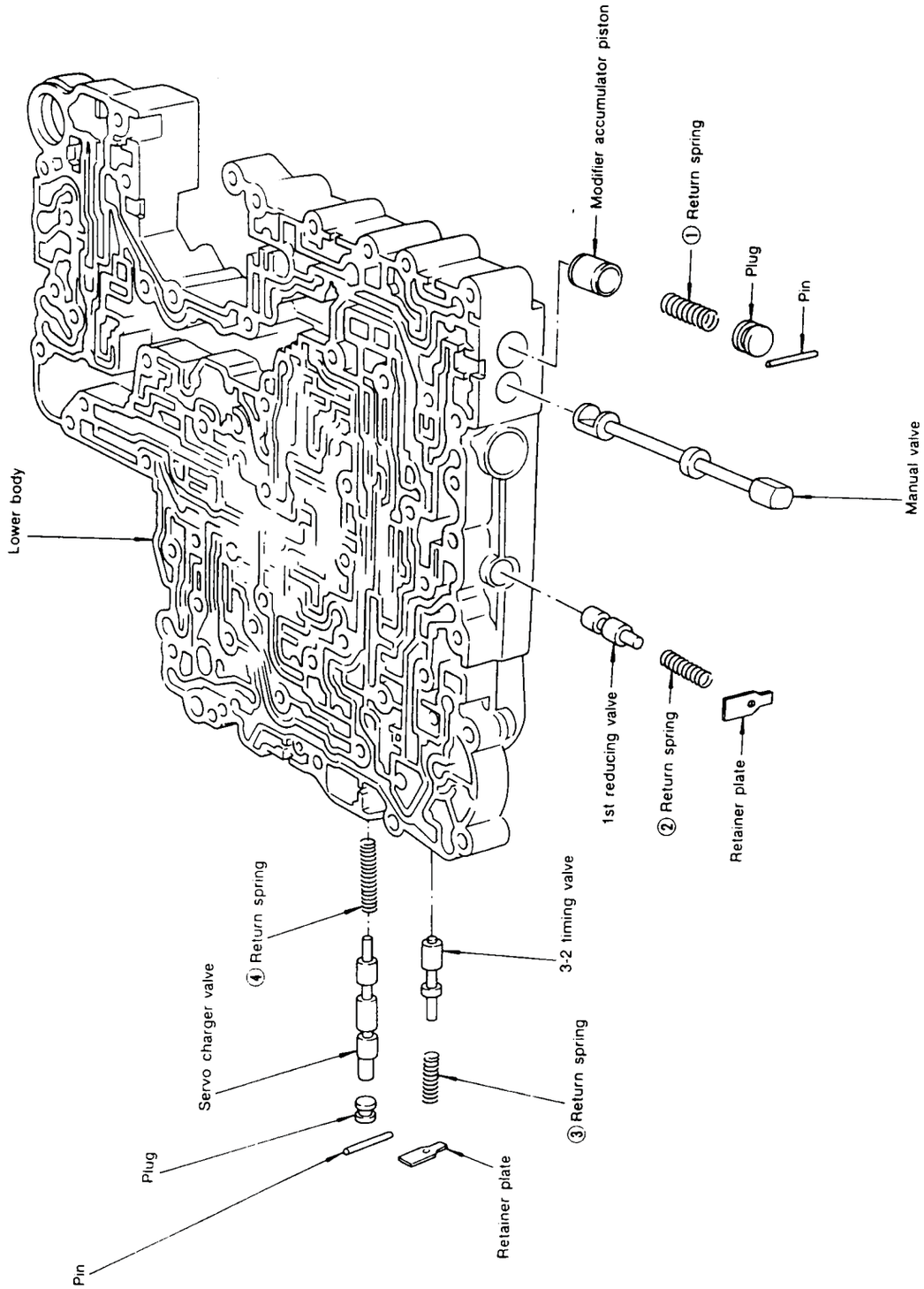

Numbers preceding valve springs correspond with those shown in Spring Chart

Apply A.T.F. to all components before their installation.

Control Valve Lower Body (Cont'd)

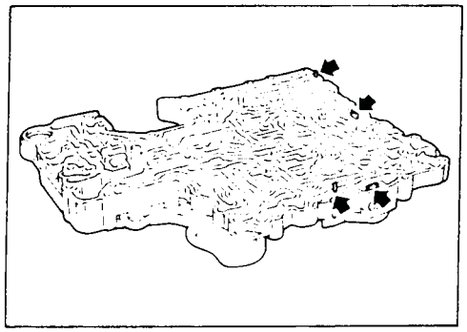

DISASSEMBLY

1. Remove valves at parallel pins.
2. Remove valves at retainer plates.
   For removal procedures, refer to "DISASSEMBLY" of Control Valve Upper Body.

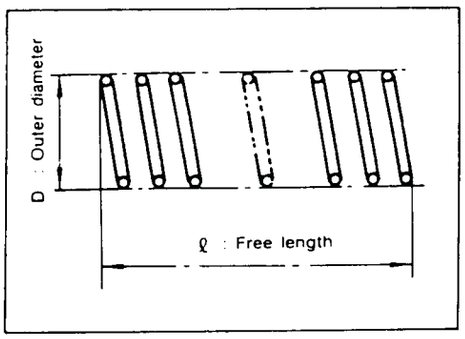

INSPECTION

Valve springs

- Check each valve spring for damage or deformation. Also measure free length and outer diameter.
- Numbers of each valve spring listed in table below

Inspection standard:

Unit: mm (in)

Parts \ Item		Part No.	ℓ	D
①	Modifier accumulator piston spring	31742-41X15	30.5 (1.201)	9.8 (0.386)
②	1st reducing valve spring	31756-41X05	25.4 (1.000)	6.75 (0.2657)
③	3-2 timing valve spring	31742-41X08	20.55 (0.8091)	6.75 (0.2657)
④	Servo charger valve spring	31742-41X06	23.0 (0.906)	6.7 (0.264)

- Replace valve springs if deformed or fatigued.

Control valves

- Check sliding surfaces of control valves, sleeves and plugs for damage.

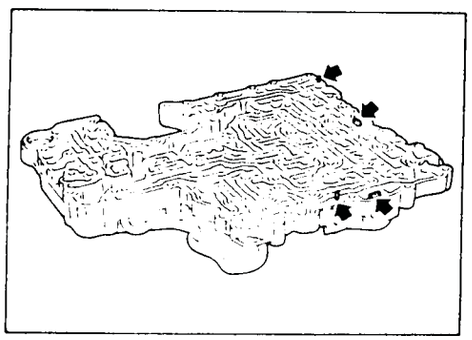

ASSEMBLY

- Install control valves.
  For installation procedures, refer to "ASSEMBLY" of Control Valve Upper Body.

Reverse Clutch

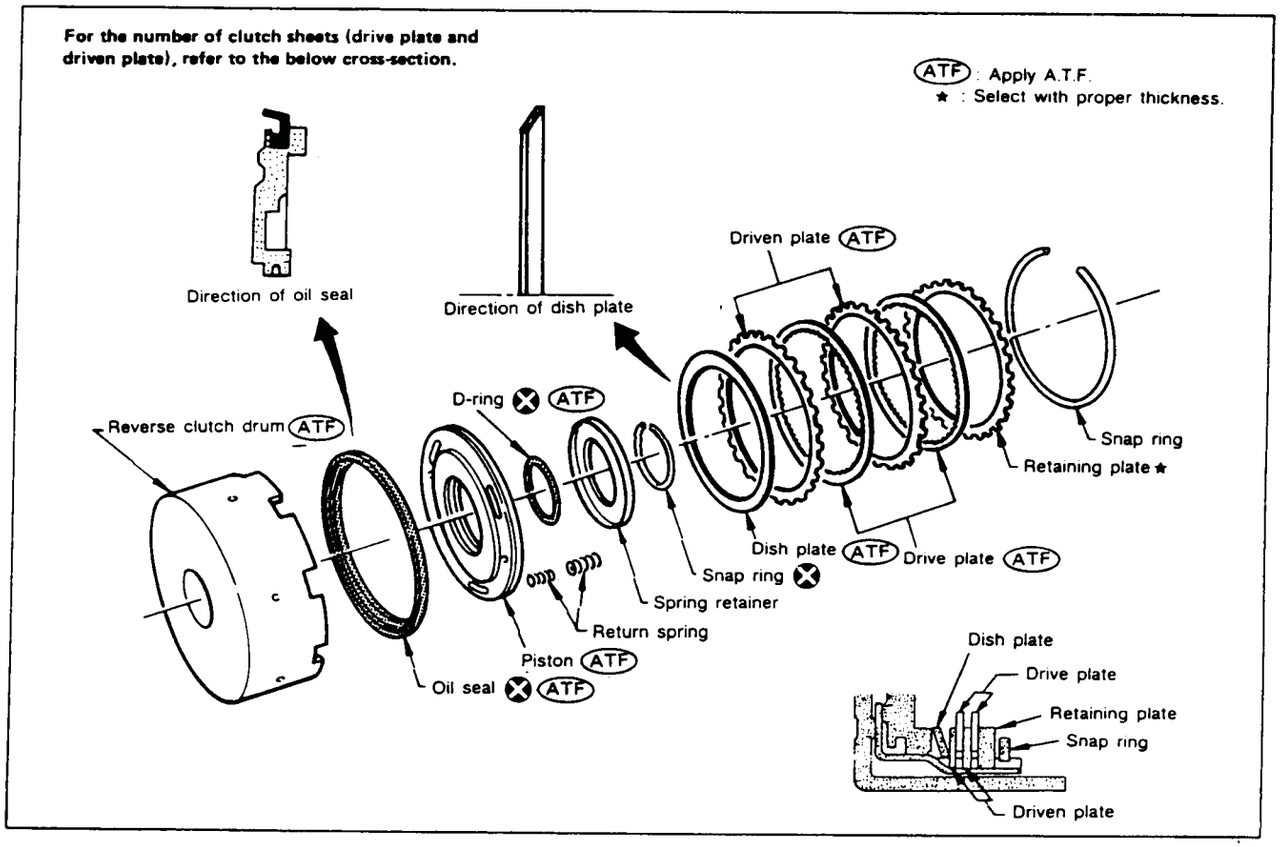

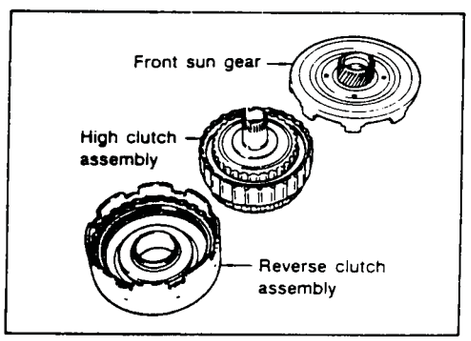

DISASSEMBLY

1. Remove reverse clutch assembly from clutch pack.

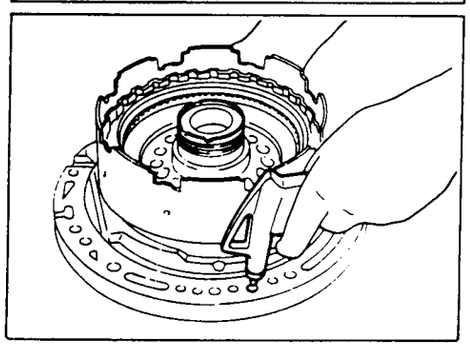

2. Check operation of reverse clutch.
a. Install seal ring onto oil pump cover and install reverse clutch. Apply compressed air to oil hole.
b. Check to see that retaining plate moves to snap ring.
c. If retaining plate does not move to snap ring, D-ring or oil seal may be damaged or fluid may be leaking at piston check ball.

Reverse Clutch (Cont'd)

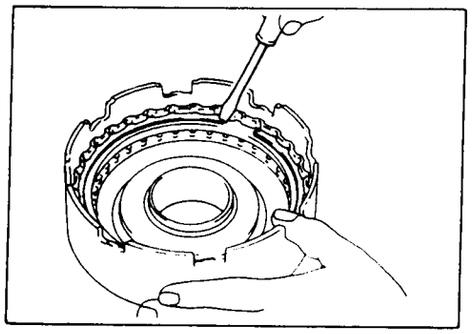

3. Remove drive plates, driven plates, retaining plate, dish plate and snap ring.

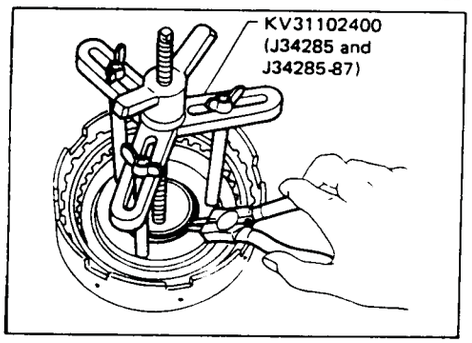

4. Remove snap ring from clutch drum while compressing clutch springs.
   - **Do not expand snap ring excessively.**
5. Remove spring retainer and return spring.

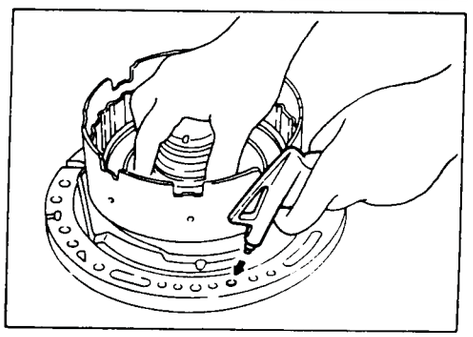

6. Install seal ring onto oil pump cover and install reverse clutch drum. While holding piston, gradually apply compressed air to oil hole until piston is removed.
   - **Do not apply compressed air abruptly.**
7. Remove D-ring and oil seal from piston.

INSPECTION

Reverse clutch snap ring and spring retainer

- Check for deformation, fatigue or damage.

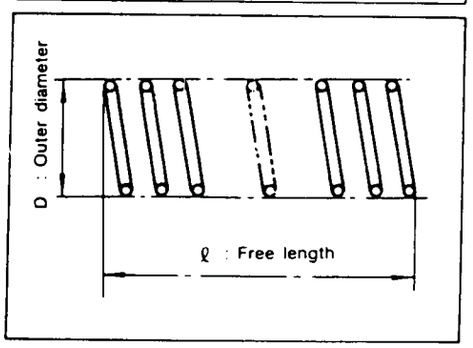

Reverse clutch return springs

- Check for deformation or damage. Also measure free length and outside diameter.

Inspection standard:

Unit: mm (in)

Parts	Part No.	ℓ	D
Spring	30505-41X02	19.69 (0.7752)	11.6 (0.457)

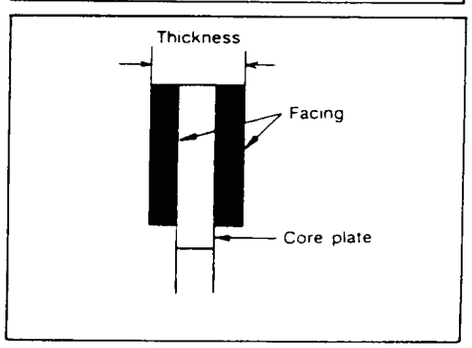

Reverse clutch drive plates

- Check facing for burns, cracks or damage.
- Measure thickness of facing.
  Thickness of drive plate:
  Standard value: 2.0 mm (0.079 in)
  Wear limit: 1.8 mm (0.071 in)
- If not within wear limit, replace.

Reverse clutch dish plate

- Check for deformation or damage.

Reverse Clutch (Cont'd)

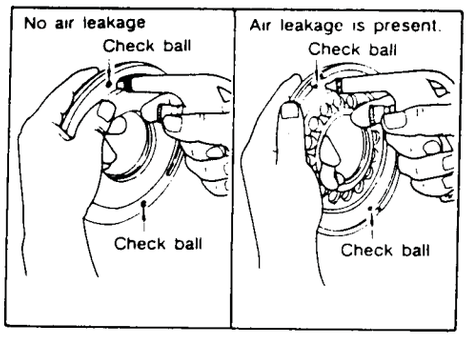

Reverse clutch piston

- Shake piston to assure that balls are not seized.
- Apply compressed air to check ball oil hole opposite the return spring to assure that there is no air leakage.
- Also apply compressed air to oil hole on return spring side to assure that air leaks past ball.

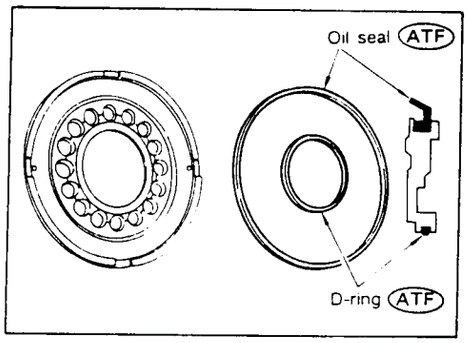

ASSEMBLY

1. Install D-ring and oil seal on piston.
   - **Apply A.T.F. to both parts.**

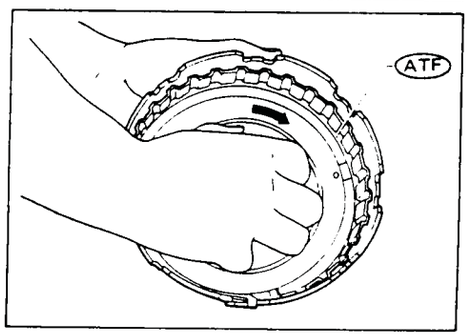

2. Install piston assembly by turning it slowly and evenly.
   - **Apply A.T.F. to inner surface of drum.**

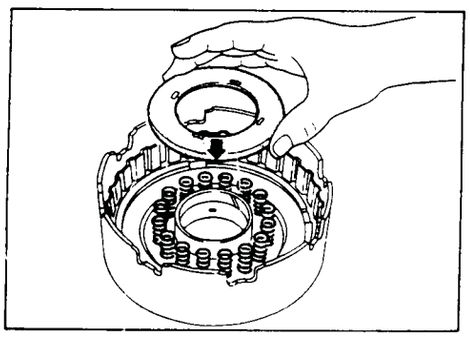

3. Install return springs and spring retainer.

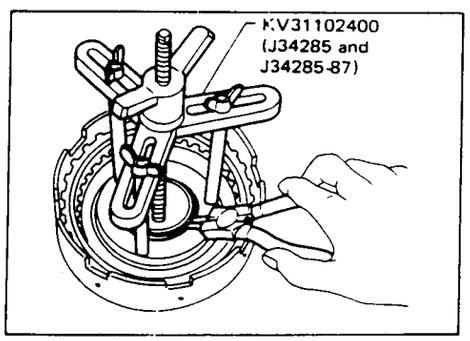

4. Install snap ring while compressing clutch springs.

Reverse Clutch (Cont'd)

- **Do not align snap ring gap with spring retainer stopper.**

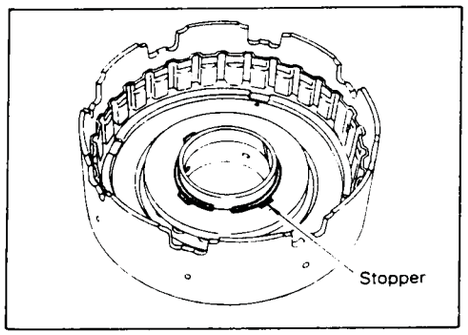

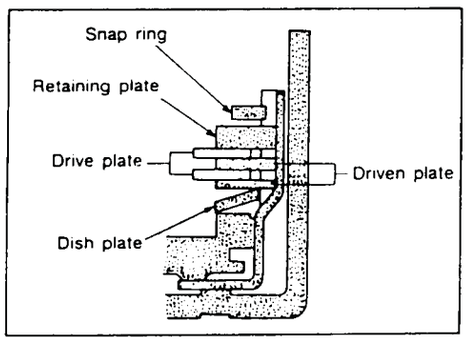

5. Install drive plates, driven plates, retaining plate and dish plate.

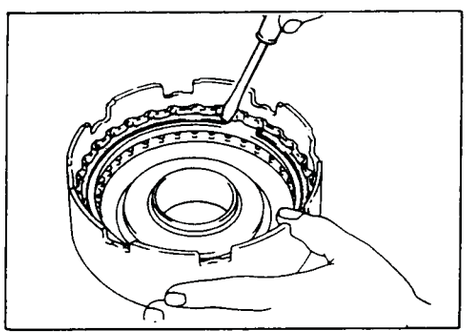

6. Install snap ring.

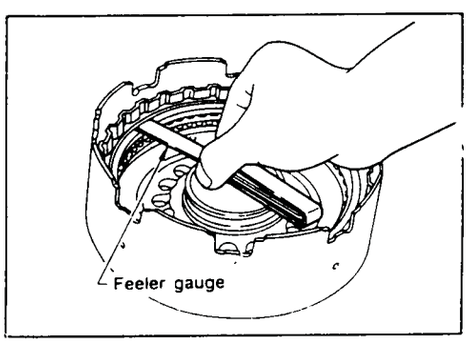

7. Measure clearance between retaining plate and snap ring. If not within allowable limit, select proper retaining plate.
   Specified clearance:
   Standard
   0.5 - 0.8 mm (0.020 - 0.031 in)
   Allowable limit
   1.2 mm (0.047 in)
   Retaining plate:
   Refer to S.D.S.

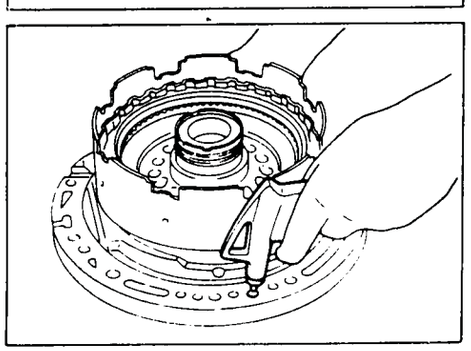

8. Check operation of reverse clutch.
   Refer to "DISASSEMBLY" of Reverse Clutch.

High Clutch

For the number of clutch sheets (drive plate and driven plate), refer to the below cross-section.

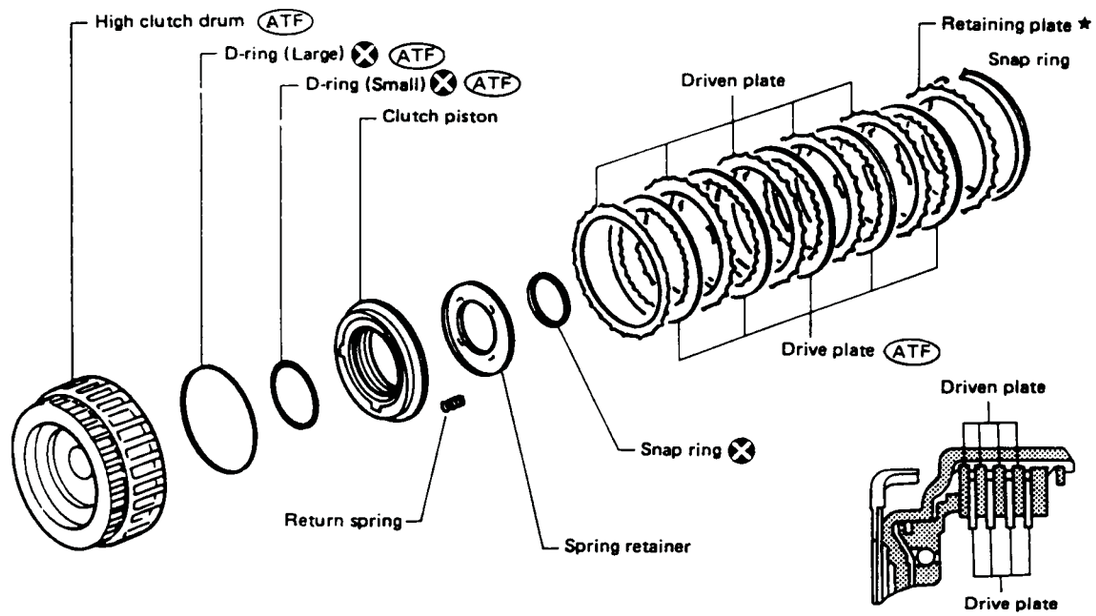

(ATF) : Apply A.T.F.
★ : Select with proper thickness.

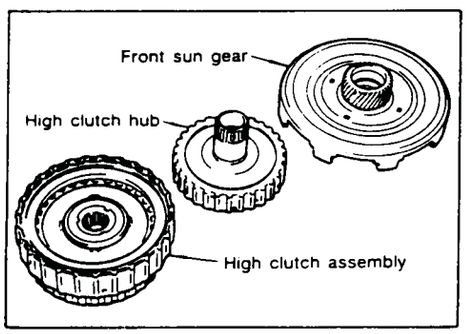

Service procedures for high clutch are essentially the same as those for reverse clutch, with the following exception:

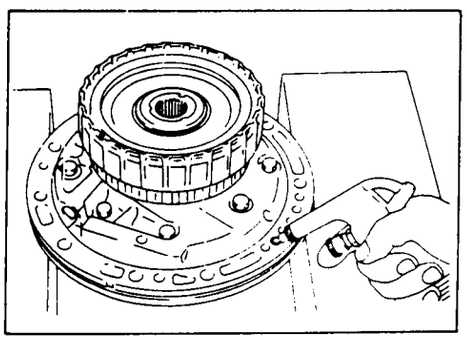

- Check of high clutch operation

High Clutch (Cont'd)

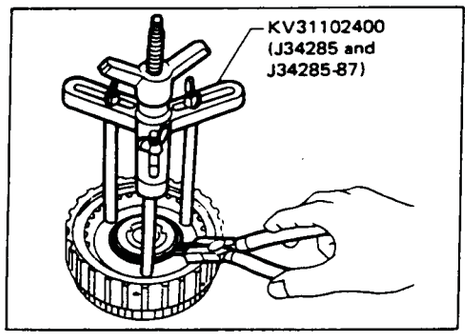

- Removal and installation of return spring

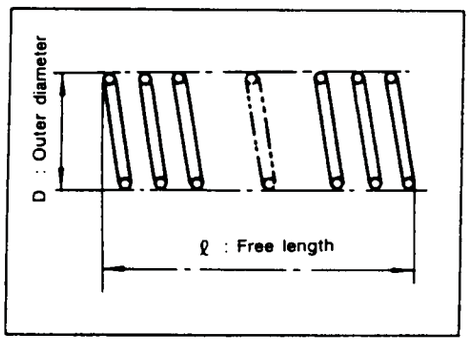

- Inspection of high clutch return springs

Inspection standard: Unit: mm (in)

Part No.	ℓ	D
31505-21X03	22.06 (0.8685)	11.6 (0.457)

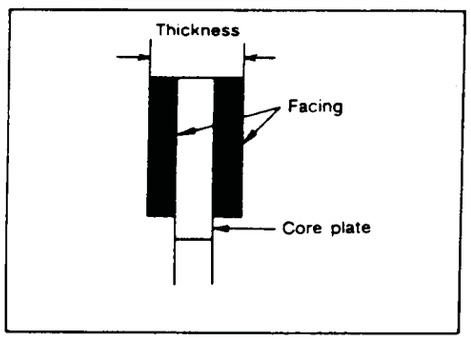

- Inspection of high clutch drive plate
  Thickness of drive plate:
  Standard
  1.6 mm (0.063 in)
  Wear limit
  1.4 mm (0.055 in)

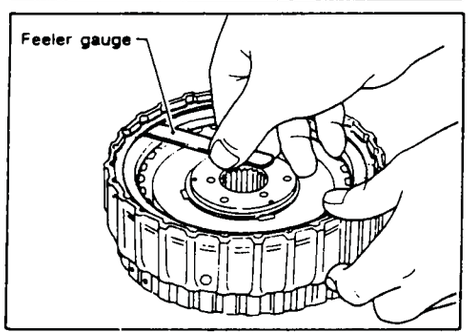

- Measurement of clearance between retaining plate and snap ring
  Specified clearance:
  Standard
  1.8 - 2.2 mm (0.071 - 0.087 in)
  Allowable limit
  3.0 mm (0.118 in)
  Retaining plate:
  Refer to S.D.S.

Forward and Overrun Clutches

For the number of clutch sheets (drive plate and driven plate), refer to the below cross-section.

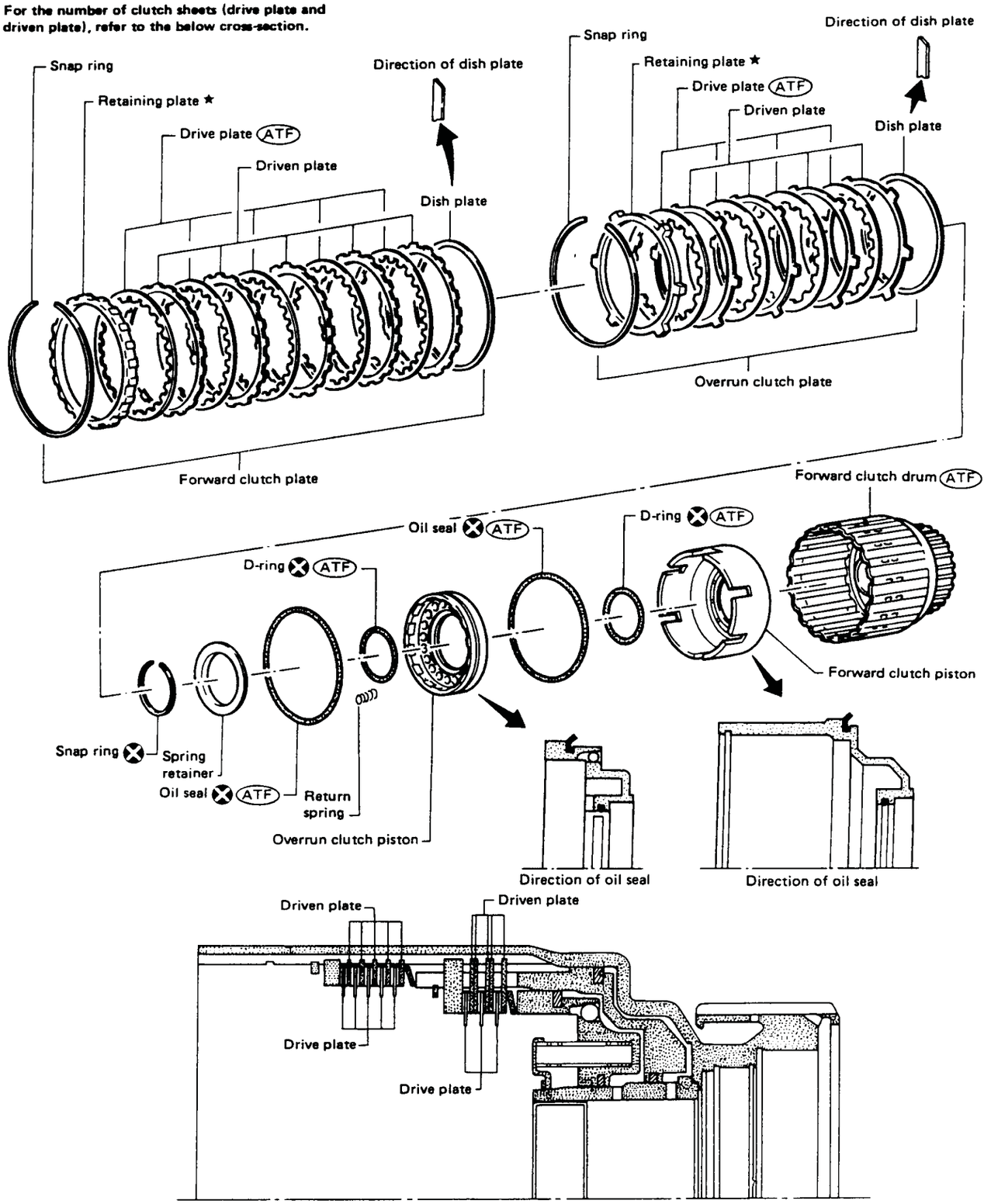

(ATF) : Apply A.T.F.
★ : Select with proper thickness.

Forward and Overrun Clutches (Cont'd)

Service procedures for forward and overrun clutches are essentially the same as those for reverse clutch, with the following exception:

- Check of forward clutch operation.

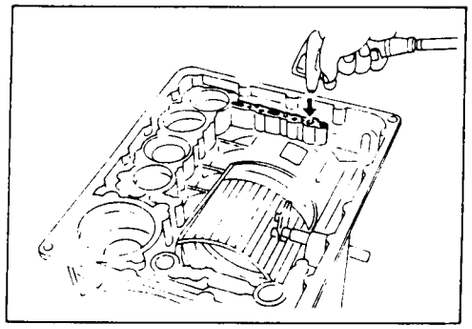

- Check of overrun clutch operation.

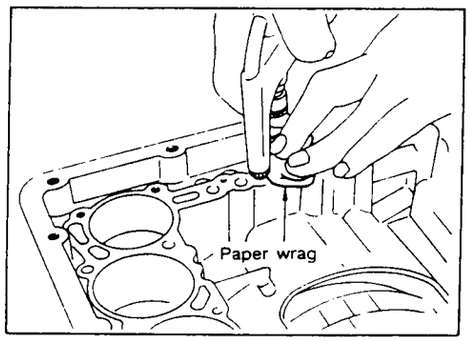

- Removal of forward clutch drum
  Remove forward clutch drum from transmission case by holding snap ring.

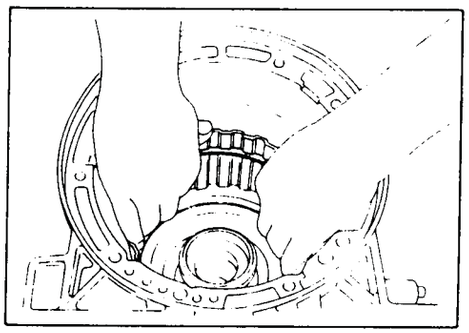

- Removal of forward clutch and overrun clutch pistons

1. While holding overrun clutch piston, gradually apply compressed air to oil hole.

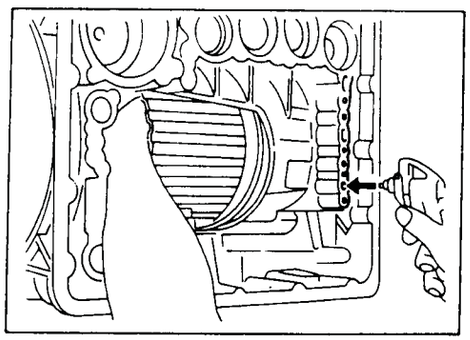

2. Remove overrun clutch from forward clutch.

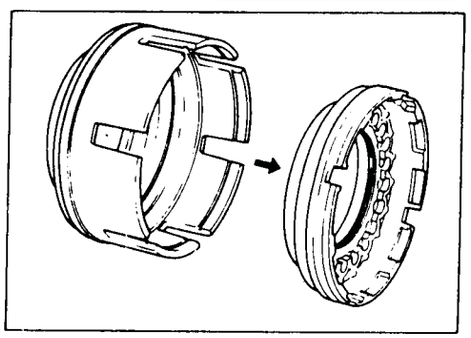

Forward and Overrun Clutches (Cont'd)

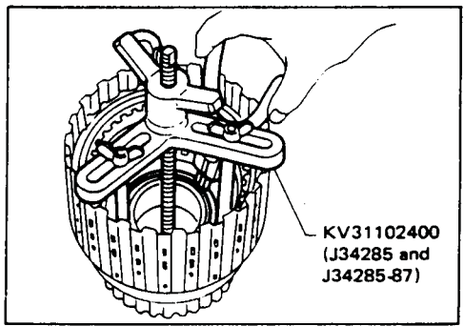

- Removal and installation of return springs

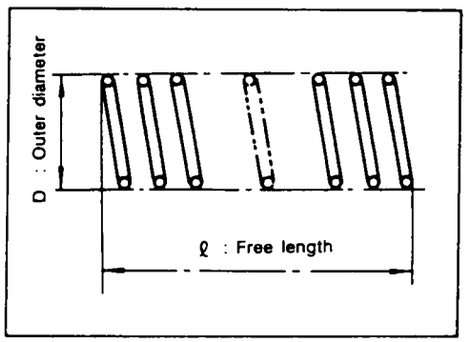

- Inspection of forward clutch and overrun clutch return springs

Inspection standard: Unit: mm (in)

Part No.	ℓ	D
31505-41X01	35.77 (1.4083)	9.7 (0.382)

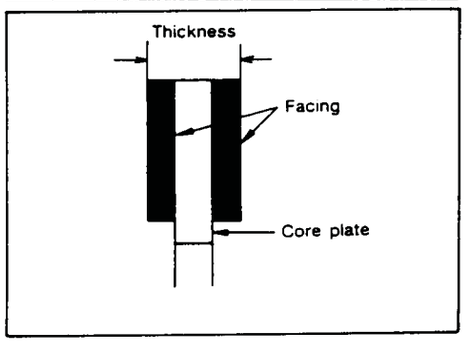

- Inspection of forward clutch drive plates
  Thickness of drive plate:
  Standard
  2.0 mm (0.079 in)
  Wear limit
  1.8 mm (0.071 in)

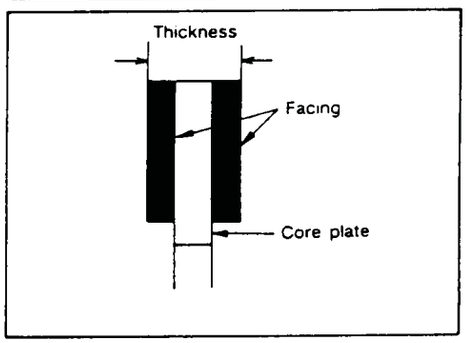

- Inspection of overrun clutch drive plates
  Thickness of drive plate:
  Standard
  2.0 mm (0.079 in)
  Wear limit
  1.8 mm (0.071 in)

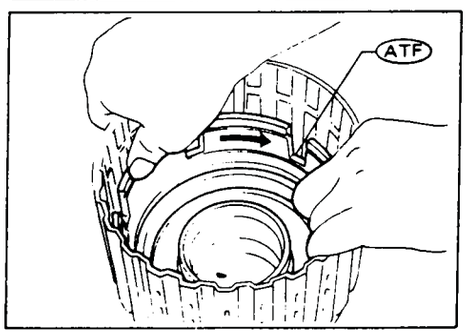

- Installation of forward clutch piston and overrun clutch piston

1. Install forward clutch piston by turning it slowly and evenly.

- **Apply A.T.F. to inner surface of clutch drum.**

Forward and Overrun Clutches (Cont'd)

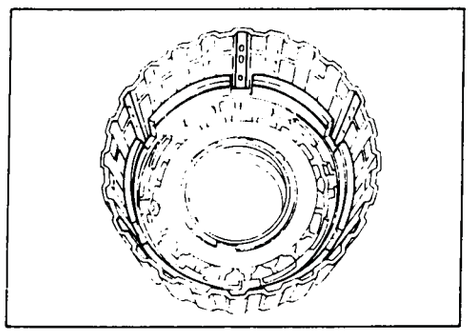

- **Align notch in forward clutch piston with groove in forward clutch drum.**

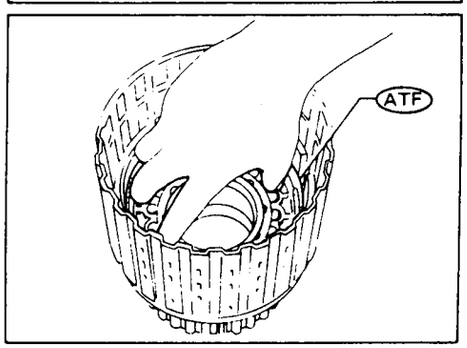

2. Install overrun clutch by turning it slowly and evenly.
- **Apply A.T.F. to inner surface of forward clutch piston.**

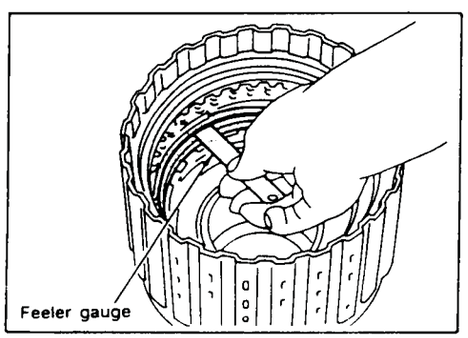

- Measurement of clearance between retaining plate and snap ring of overrun clutch
  - **Specified clearance:**
    - **Standard**
      - **1.0 - 1.4 mm (0.039 - 0.055 in)**
    - **Allowable limit**
      - **2.0 mm (0.079 in)**
  - **Retaining plate:**
    - **Refer to S.D.S.**

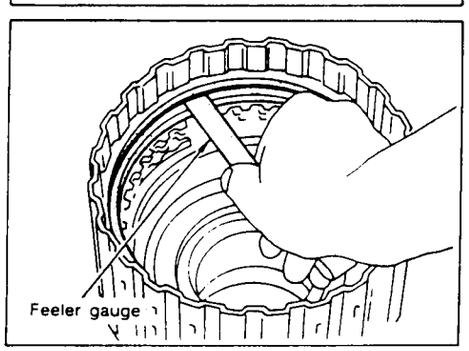

- Measurement of clearance between retaining plate and snap ring of forward clutch
  - **Specified clearance:**
    - **Standard**
      - **0.45 - 0.85 mm (0.0177 - 0.0335 in)**
    - **Allowable limit**
      - **1.85 mm (0.0728 in)**
  - **Retaining plate:**
    - **Refer to S.D.S.**

Low & Reverse Brake

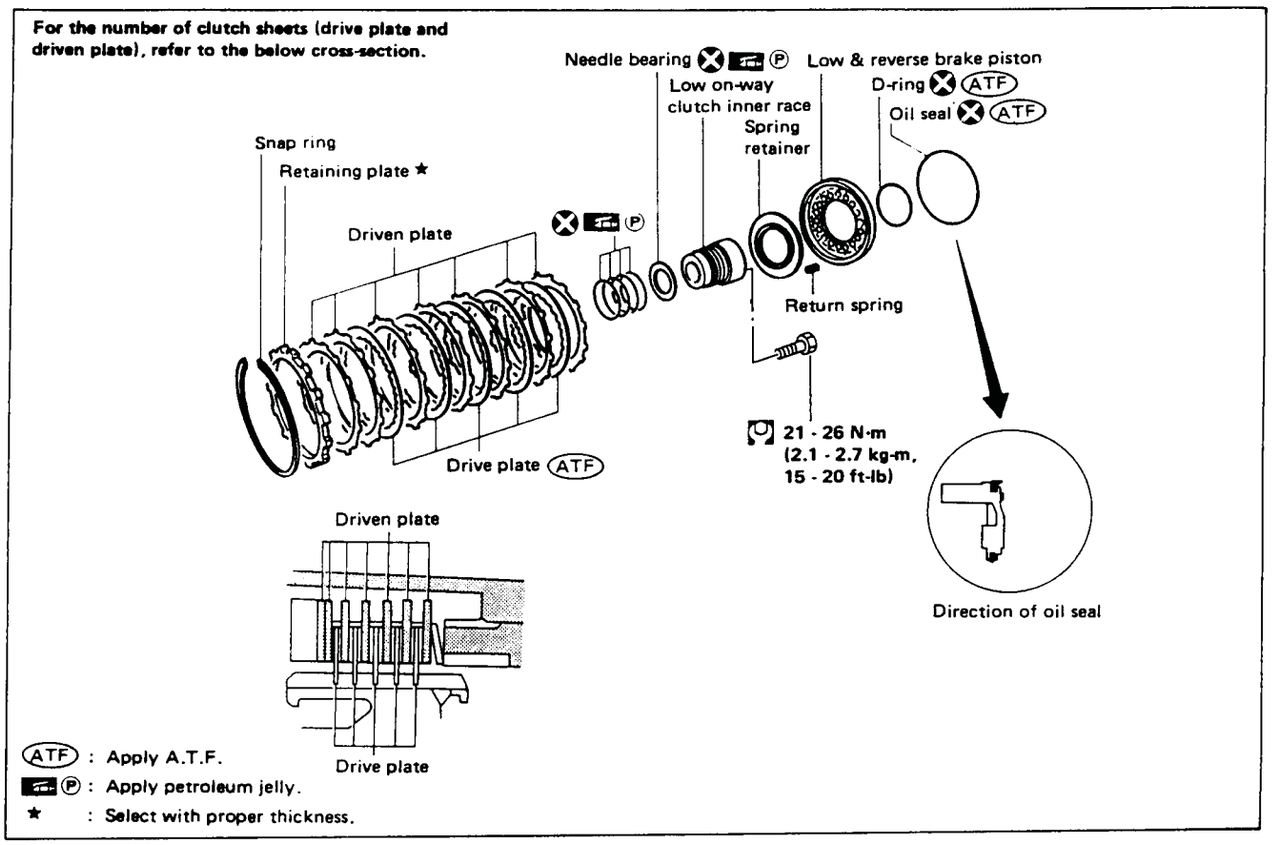

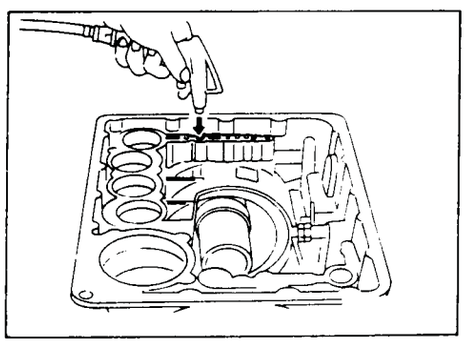

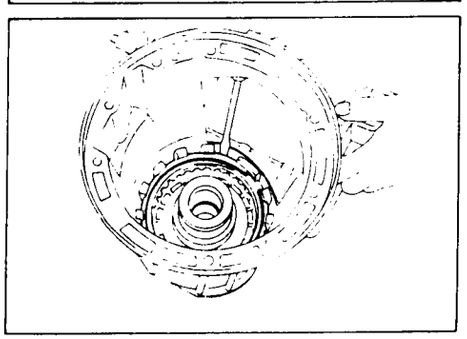

DISASSEMBLY

1. Check operation of low and reverse brake.

a. Install seal ring onto oil pump cover and install reverse clutch. Apply compressed air to oil hole.

b. Check to see that retaining plate moves to snap ring.

c. If retaining plate does not move to snap ring, D-ring or oil seal may be damaged or fluid may be leaking at piston check ball.

2. Remove snap ring, low and reverse brake drive plates, driven plates and dish plate.

Low & Reverse Brake (Cont'd)

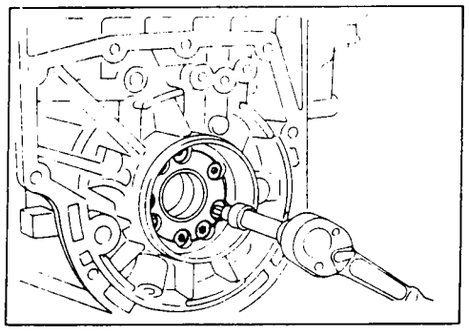

3. Remove low one-way clutch inner race, spring retainer and return spring from transmission case.

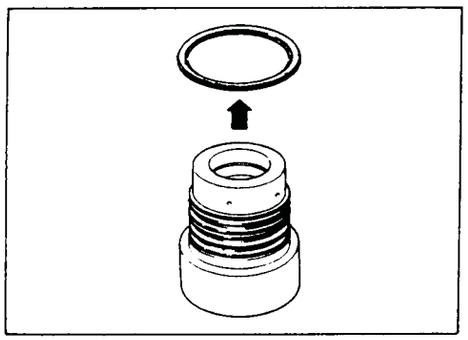

4. Remove seal rings from low one-way clutch inner race.
5. Remove needle bearing from low one-way clutch inner race.

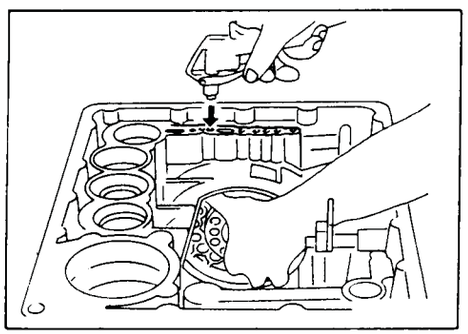

6. Remove low and reverse brake piston using compressed air.
7. Remove oil seal and D-ring from piston.

INSPECTION

Low and reverse brake snap ring and spring retainer

- Check for deformation, or damage.

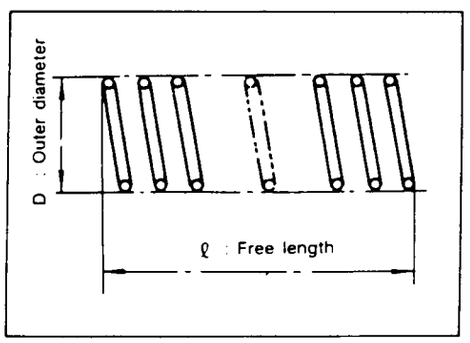

Low and reverse brake return springs

- Check for deformation or damage. Also measure free length and outside diameter.

Inspection standard: Unit: mm (in)

Part No.	ℓ	D
31521-21X00	23.7 (0.933)	11.6 (0.457)

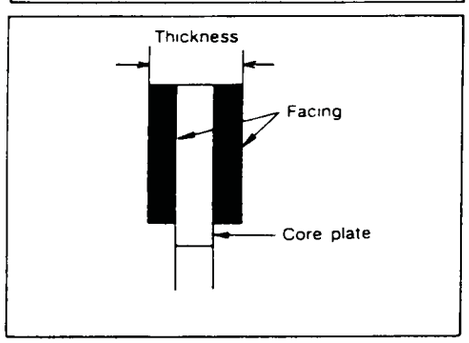

Low and reverse brake drive plates

- Check facing for burns, cracks or damage.
- Measure thickness of facing.

  Thickness of drive plate:
  Standard value
  2.0 mm (0.079 in)
  Wear limit
  1.8 mm (0.071 in)
- If not within wear limit, replace.

Low & Reverse Brake (Cont'd)

Low one-way clutch inner race

- Check frictional surface of inner race for wear or damage.

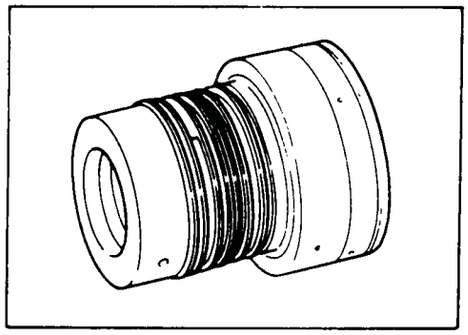

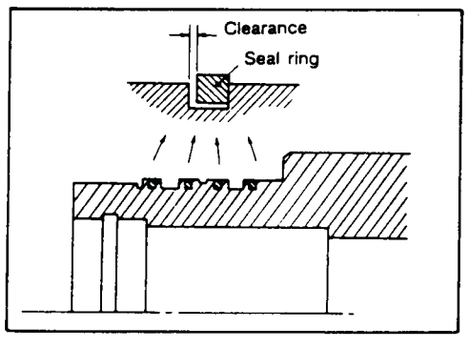

- Install a new seal rings onto low one-way clutch inner race.
- **Be careful not to expand seal ring gap excessively.**
- Measure seal ring-to-groove clearance.
  Inspection standard:
  Standard value: 0.10 - 0.25 mm (0.0039 - 0.0098 in)
  Allowable limit: 0.25 mm (0.0098 in)
- If not within allowable limit, replace low one-way clutch inner race.

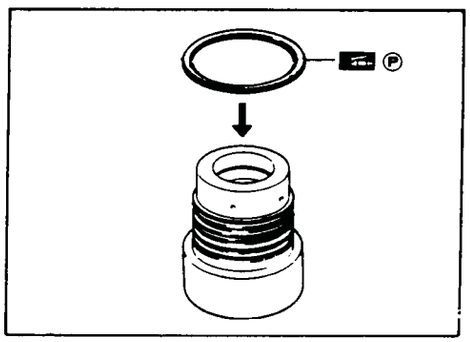

ASSEMBLY

1. Install bearing onto one-way clutch inner race.
- **Pay attention to its direction — Black surface goes to rear side.**
- **Apply petroleum jelly to needle bearing.**

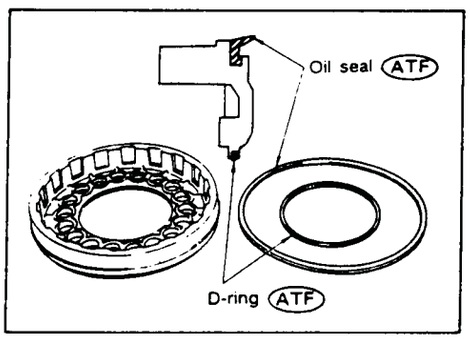

2. Install oil seal and D-ring onto piston.
- **Apply A.T.F. to oil seal and D-ring.**

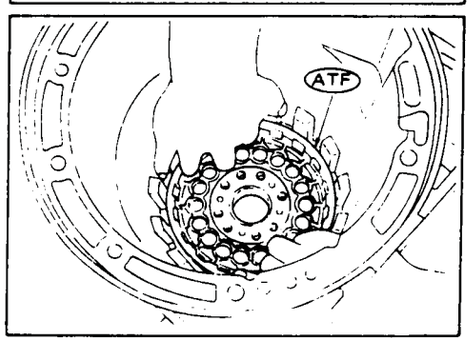

3. Install piston by rotating it slowly and evenly.
- **Apply A.T.F. to inner surface of transmission case.**

Low & Reverse Brake (Cont'd)

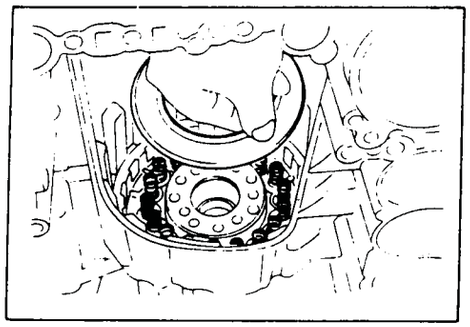

4. Install return springs, spring retainer and low one-way clutch inner race onto transmission case.

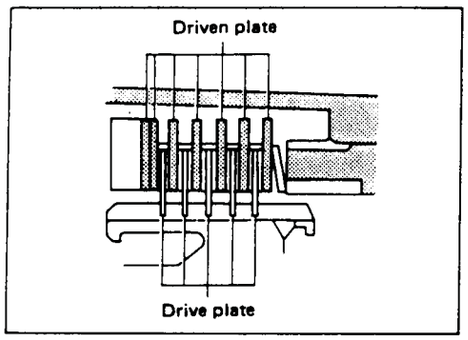

5. Install dish plate, low and reverse brake drive plates, driven plates and retaining plate.
6. Install snap ring on transmission case.

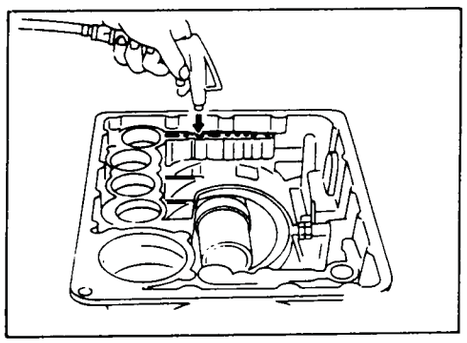

7. Check operation of low and reverse brake clutch piston. Refer to "DISASSEMBLY".

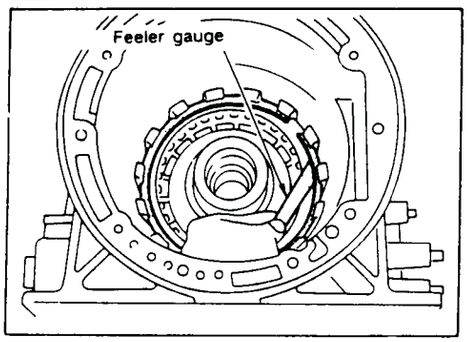

8. Measure clearance between retaining plate and snap ring. If not within allowable limit, select proper retaining plate.
   Specified clearance:
   Standard
   1.1 - 1.5 mm (0.043 - 0.059 in)
   Allowable limit
   2.5 mm (0.098 in)
   Retaining plate:
   Refer to S.D.S.

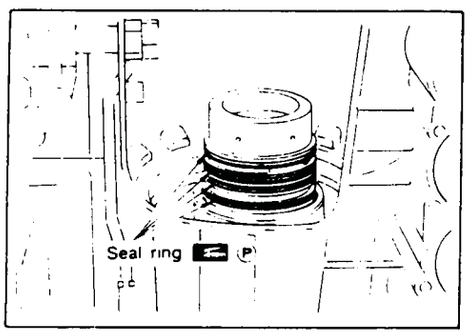

9. Install low one-way clutch inner race seal ring.
- **Apply petroleum jelly to seal ring.**
- **Make sure seal rings are pressed firmly into place and held by petroleum jelly.**

Forward Clutch Drum Assembly

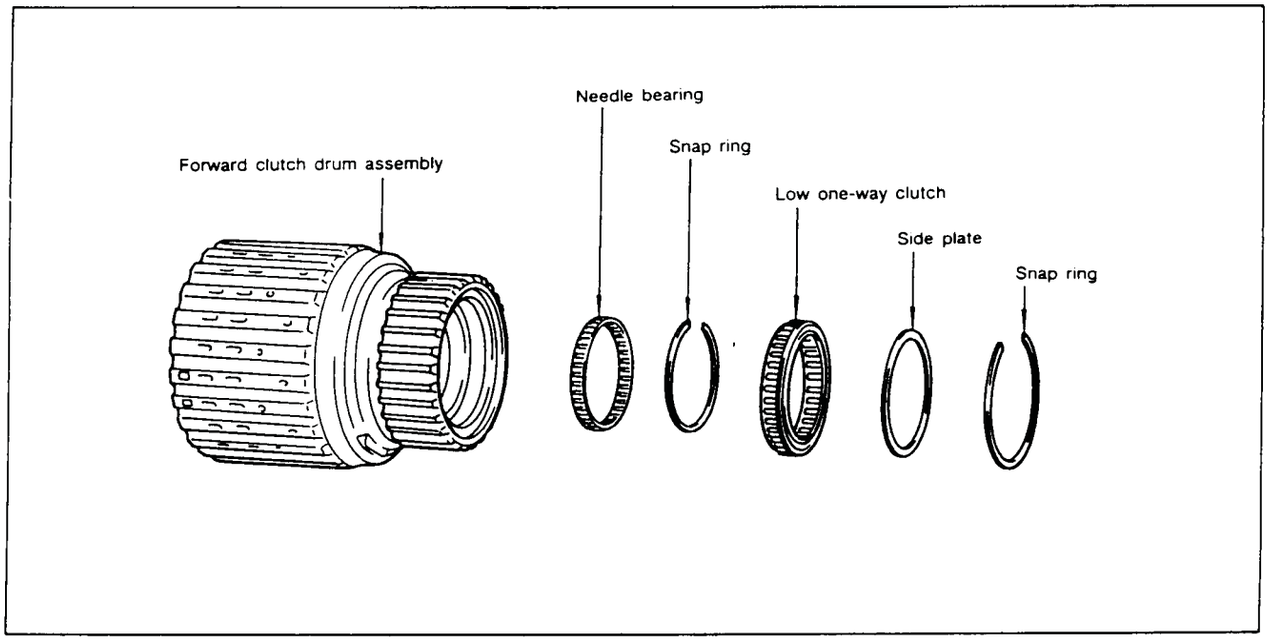

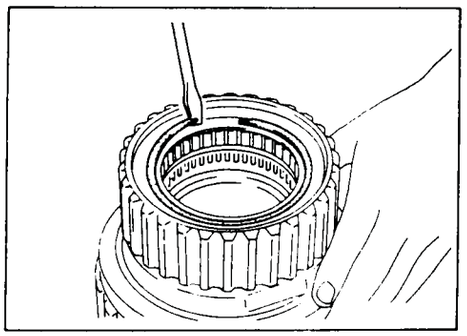

DISASSEMBLY

1. Remove snap ring from forward clutch drum.

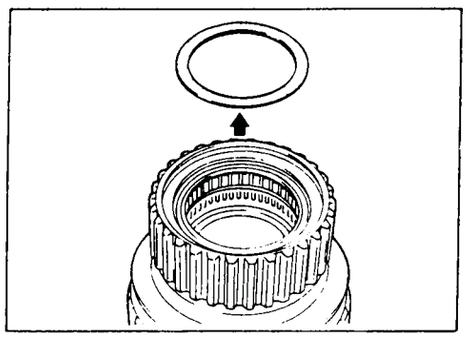

2. Remove side plate from forward clutch drum.

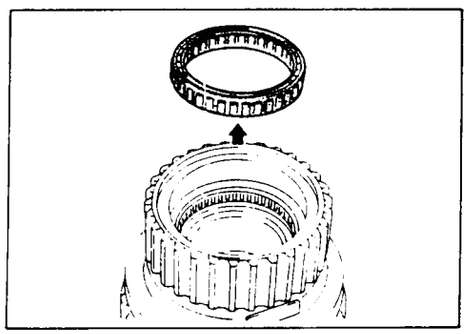

3. Remove low one-way clutch from forward clutch drum.

Forward Clutch Drum Assembly (Cont'd)

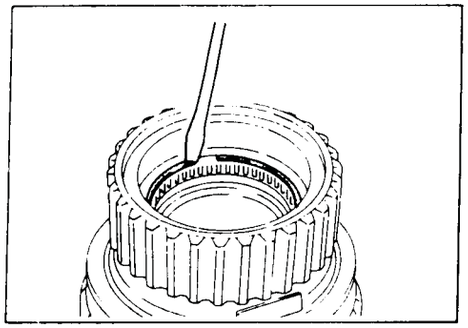

4. Remove snap ring from forward clutch drum.

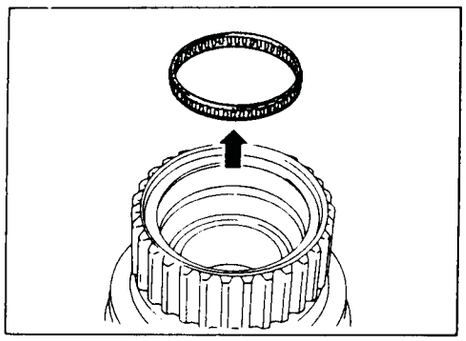

5. Remove needle bearing from forward clutch drum.

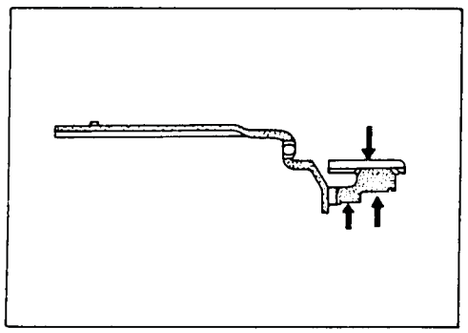

INSPECTION

Forward clutch drum

- Check spline portion for wear or damage.
- Check frictional surfaces of low one-way clutch and needle bearing for wear or damage.

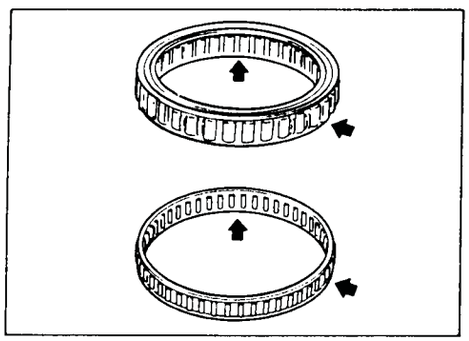

Needle bearing and low one-way clutch

- Check frictional surface for wear or damage.

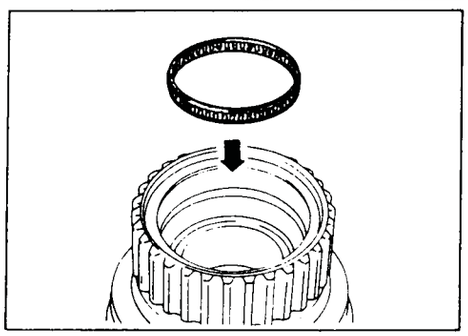

ASSEMBLY

1. Install needle bearing in forward clutch drum.

Forward Clutch Drum Assembly (Cont'd)

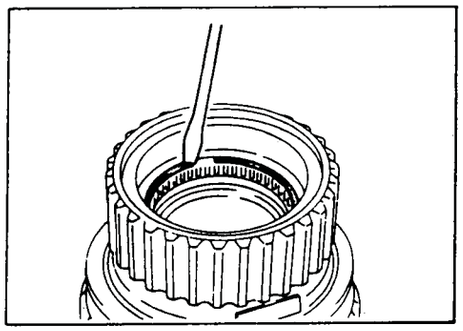

2. Install snap ring onto forward clutch drum.

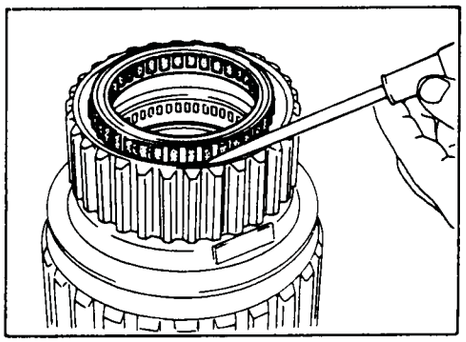

3. Install low one-way clutch onto forward clutch drum by pushing the roller in evenly.

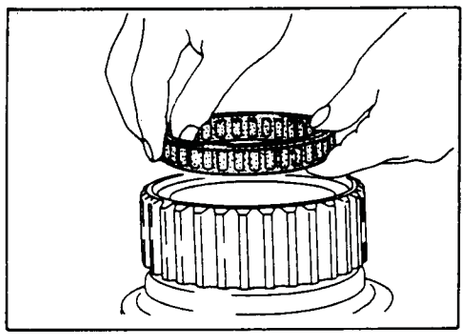

- **Install low one-way clutch with flange facing rearward.**

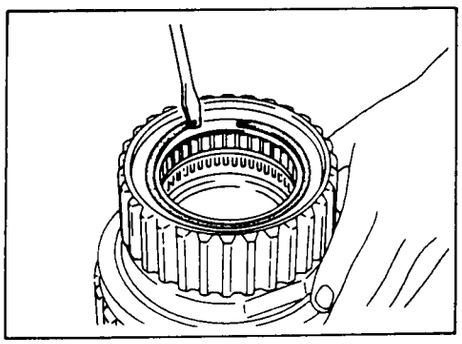

4. Install side plate onto forward clutch drum.
5. Install snap ring onto forward clutch drum.

Rear Internal Gear and Forward Clutch Hub

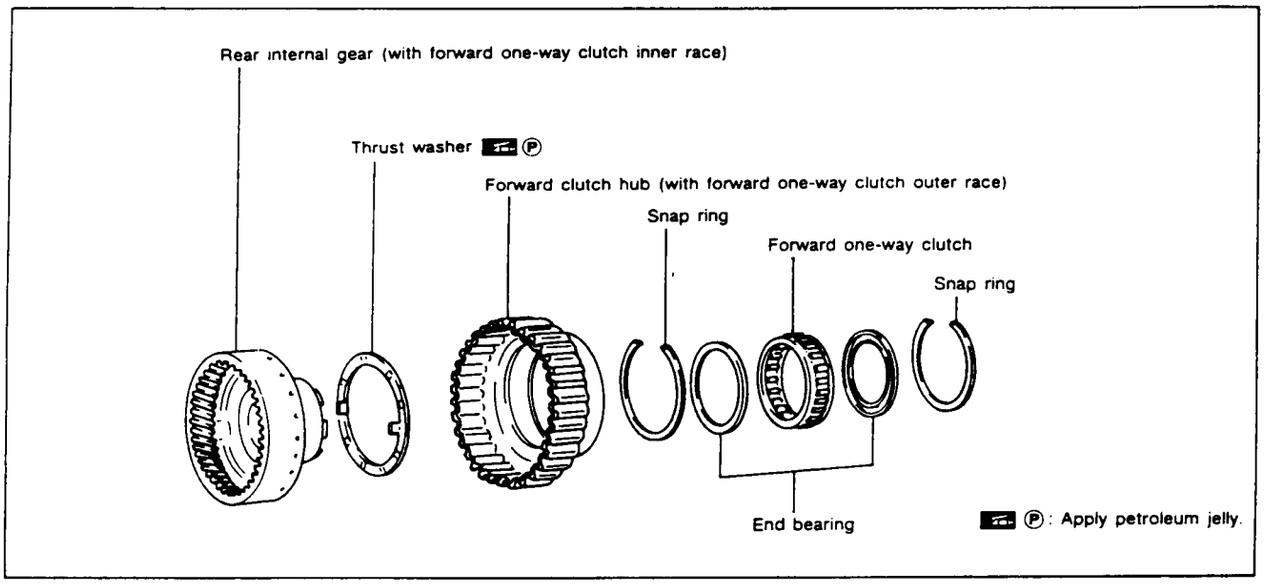

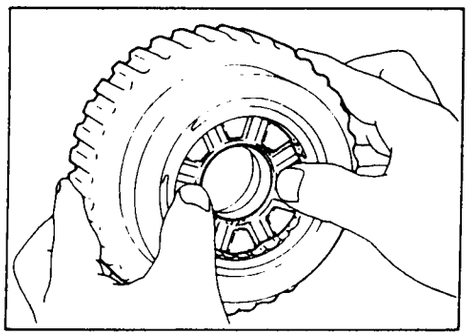

DISASSEMBLY

1. Remove rear internal gear by pushing forward clutch hub forward.

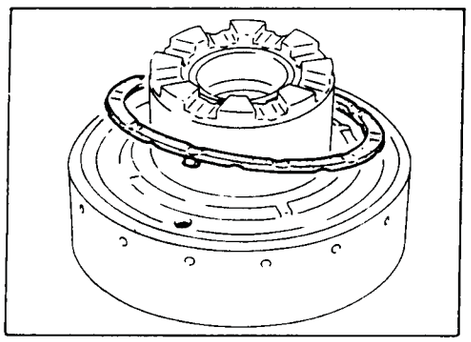

2. Remove thrust washer from rear internal gear.

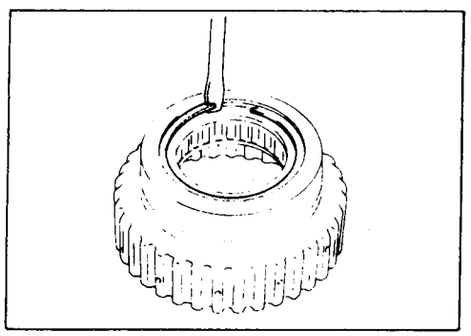

3. Remove snap ring from forward clutch hub.

Rear Internal Gear and Forward Clutch Hub (Cont'd)

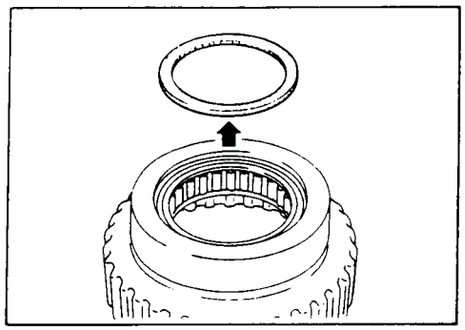

4. Remove end bearing.

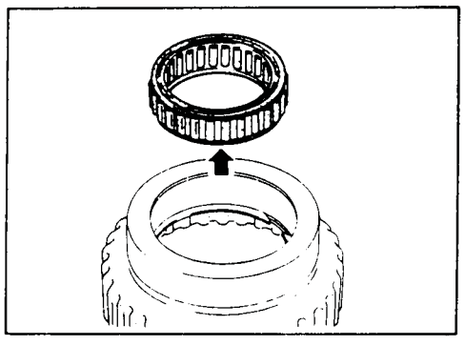

5. Remove forward one-way clutch and end bearing as a unit from forward clutch hub.

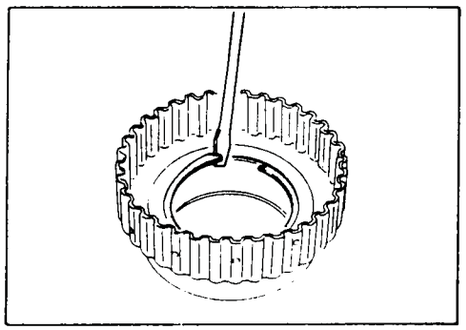

6. Remove snap ring from forward clutch hub.

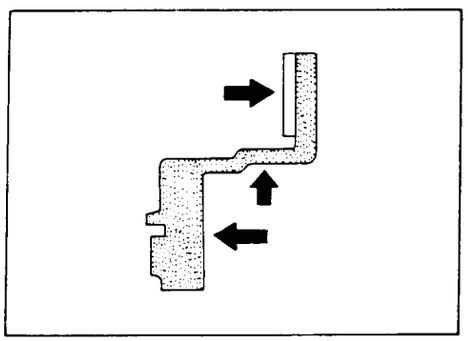

INSPECTION

Rear internal gear and forward clutch hub

- Check gear for excessive wear, chips or cracks.
- Check frictional surfaces of forward one-way clutch and thrust washer for wear or damage.
- Check spline for wear or damage.

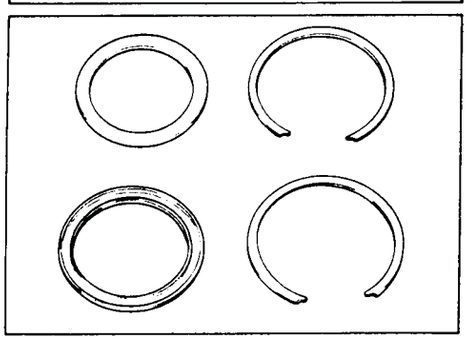

Snap ring and end bearing

- Check for deformation or damage.

Rear Internal Gear and Forward Clutch Hub (Cont'd)

ASSEMBLY

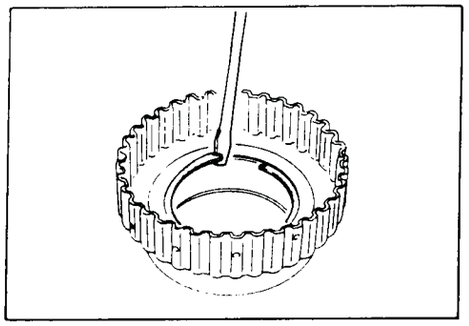

1. Install snap ring onto forward clutch hub.
2. Install end bearing.

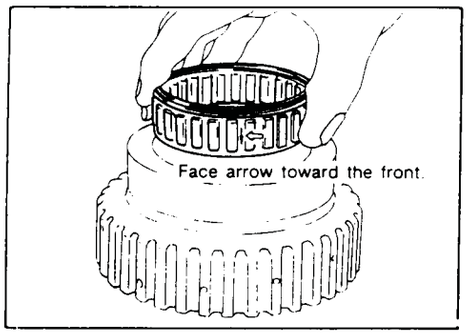

3. Install forward one-way clutch onto clutch hub.
- **Install forward one-way clutch with flange facing rearward.**
4. Install end bearing.
5. Install snap ring onto forward clutch hub.

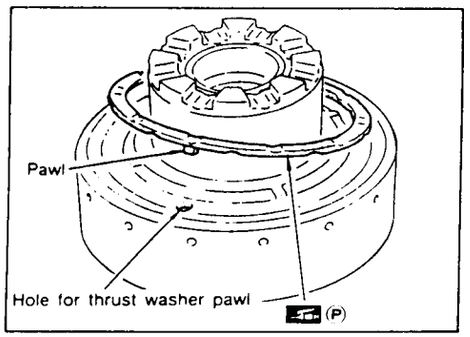

6. Install thrust washer onto rear internal gear.
- **Apply petroleum jelly to thrust washer.**
- **Securely insert pawls of thrust washer into holes in rear internal gear.**

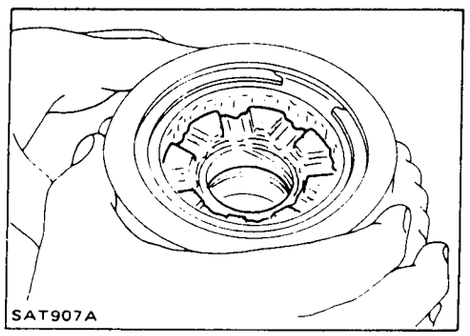

7. Position forward clutch hub in rear internal gear.

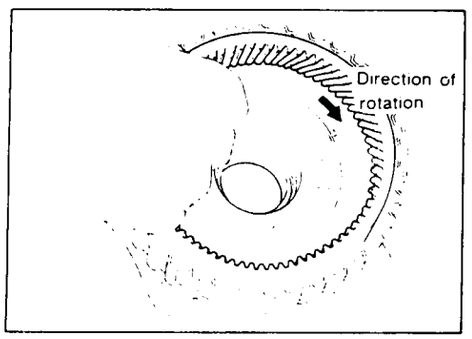

8. After installing, check to assure that forward clutch hub rotates clockwise.

Band Servo Piston Assembly

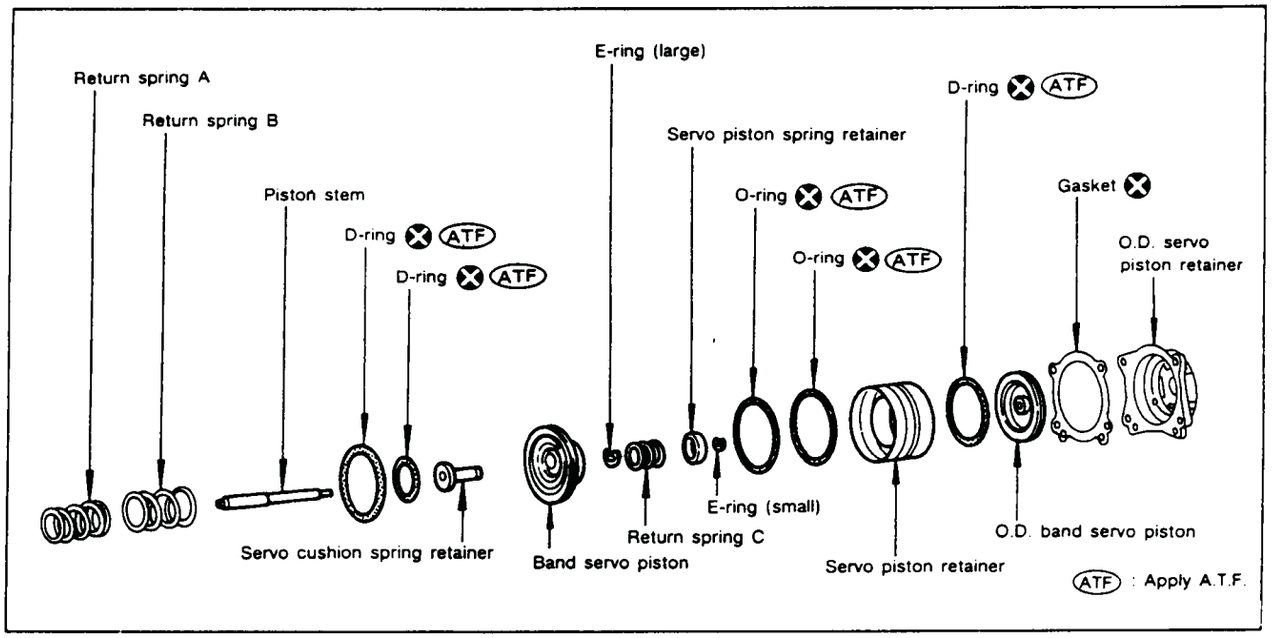

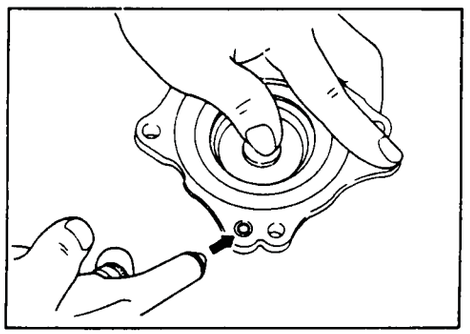

DISASSEMBLY

1. Block one oil hole in O.D. servo piston retainer and the center hole in O.D. band servo piston.
2. Apply compressed air to the other oil hole in piston retainer to remove O.D. band servo piston from retainer.
3. Remove D-ring from O.D. band servo piston.

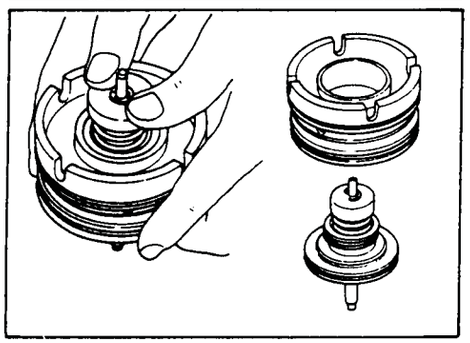

4. Remove band servo piston assembly from servo piston retainer by pushing it forward.

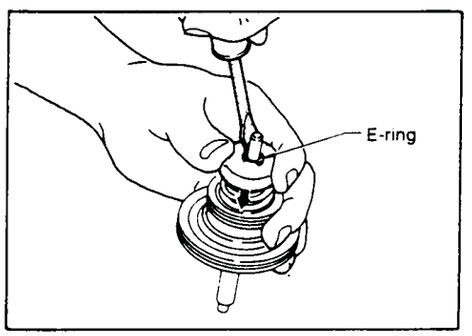

5. Place piston stem end on a wooden block. While pushing servo piston spring retainer down, remove E-ring.

Band Servo Piston Assembly (Cont'd)

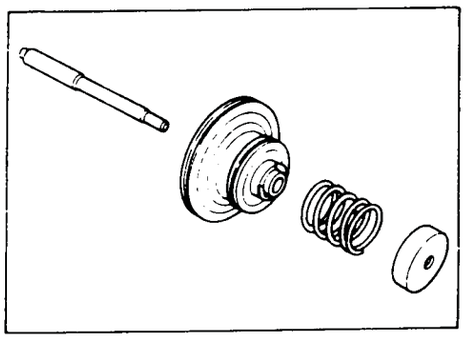

6. Remove servo piston spring retainer, return spring C and piston stem from band servo piston.

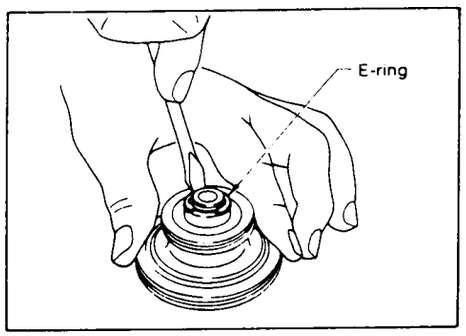

7. Remove E-ring from band servo piston.

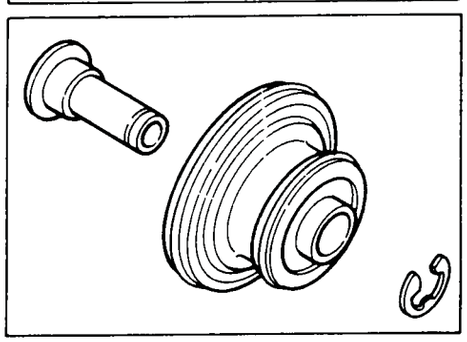

8. Remove servo cushion spring retainer from band servo piston.
9. Remove D-rings from band servo piston.
10. Remove O-rings from servo piston retainer.

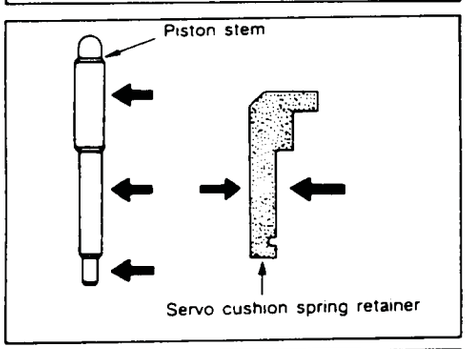

INSPECTION

Pistons, retainers and piston stem

- Check frictional surfaces for abnormal wear or damage.

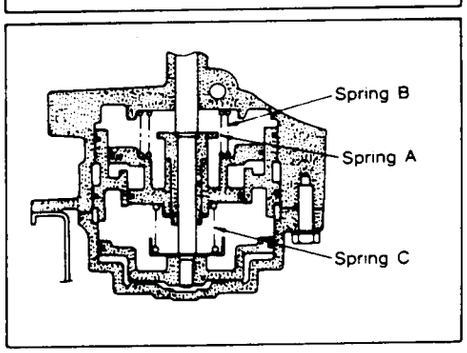

Return springs

- Check for deformation or damage. Measure free length and outer diameter.

Inspection standard: Unit: mm (in)

Parts	Free length	Outer diameter
Spring A	45.6 (1.795)	34.3 (1.350)
Spring B	53.8 (2.118)	40.3 (1.587)
Spring C	29.0 (1.142)	27.6 (1.087)

Band Servo Piston Assembly (Cont'd)

ASSEMBLY

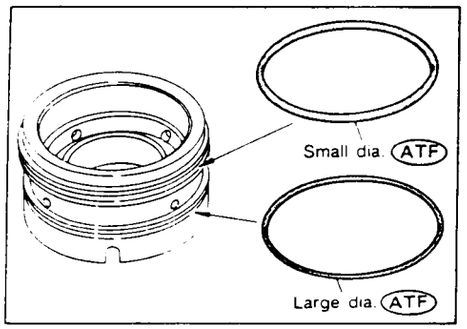

1. Install O-rings onto servo piston retainer.
   - **Apply A.T.F. to O-rings.**
   - **Pay attention to position of each O-ring.**

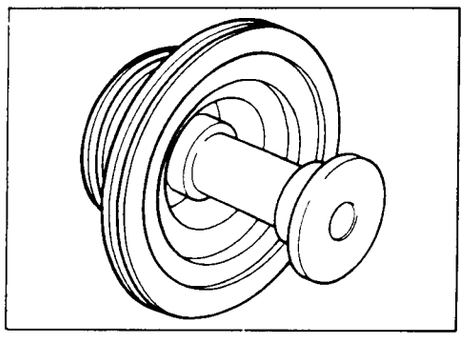

2. Install servo cushion spring retainer onto band servo piston.

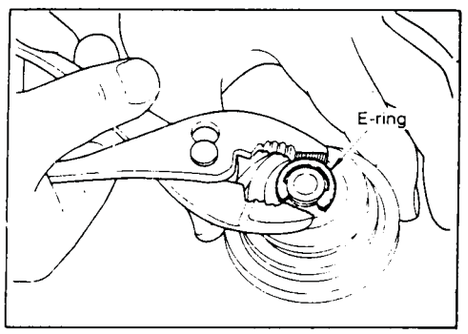

3. Install E-ring onto servo cushion spring retainer.

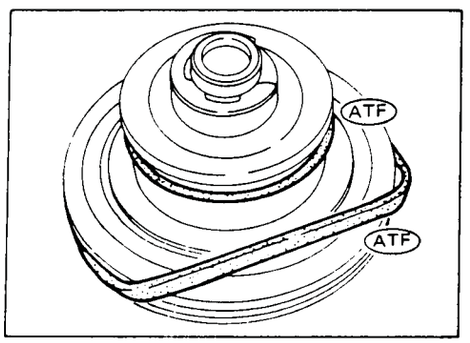

4. Install D-rings onto band servo piston.
   - **Apply A.T.F. to D-rings.**

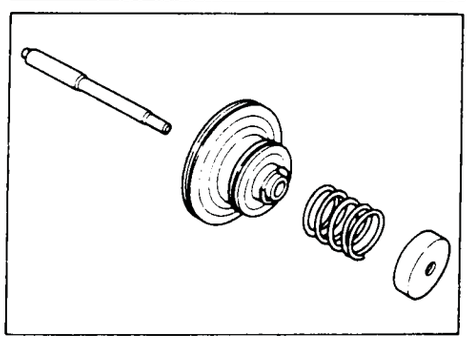

5. Install servo piston spring retainer, return spring C and piston stem onto band servo piston.

Band Servo Piston Assembly (Cont'd)

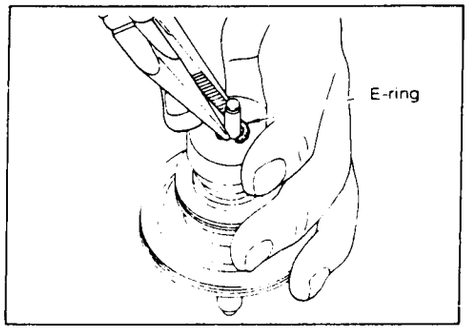

6. Place piston stem end on a wooden block. While pushing servo piston spring retainer down, install E-ring.

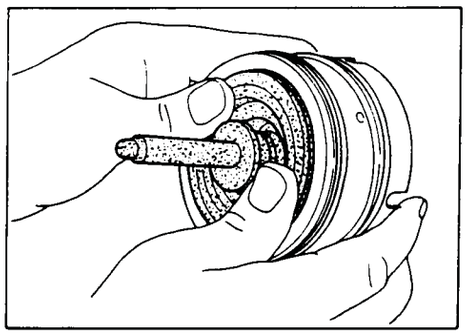

7. Install band servo piston assembly onto servo piston retainer by pushing it inward.

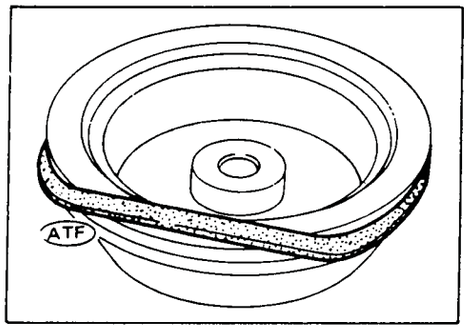

8. Install D-ring on O.D. band servo piston.
- **Apply A.T.F. to D-ring.**

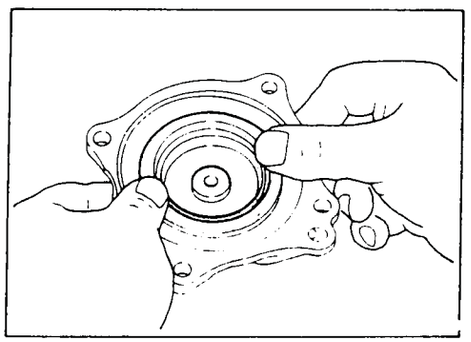

9. Install O.D. band servo piston onto servo piston retainer by pushing it inward.

Parking Pawl Components

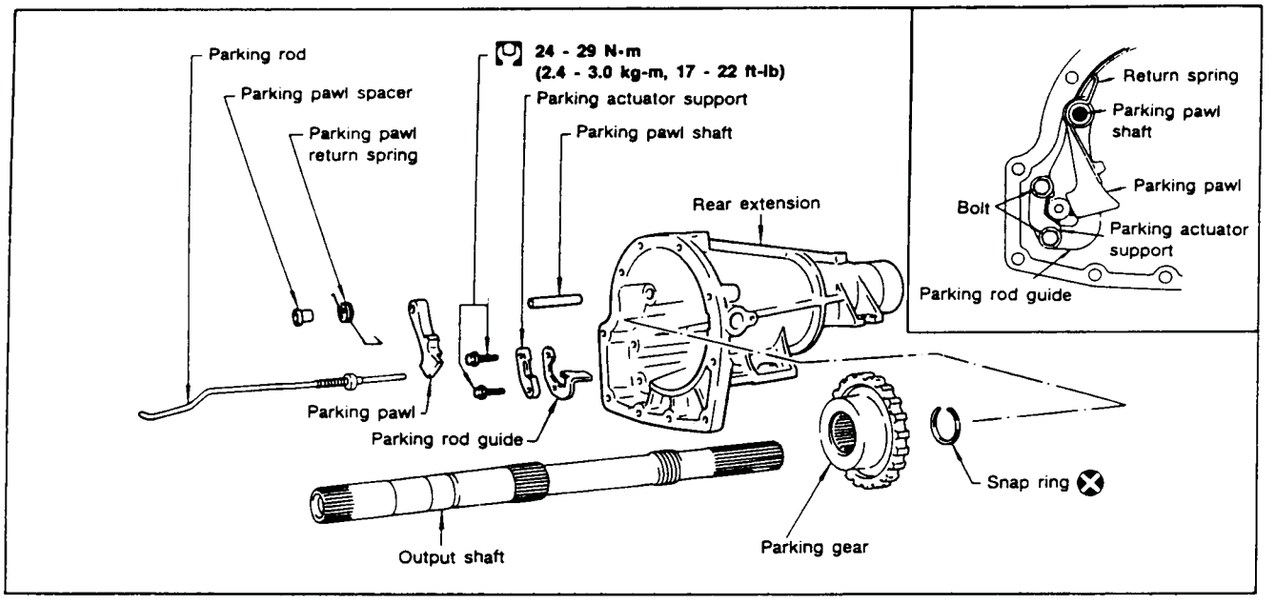

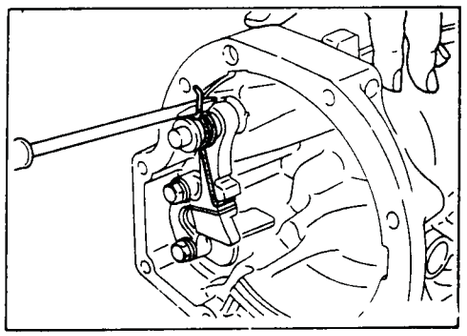

DISASSEMBLY

1. Slide return spring to the front of rear extension flange.

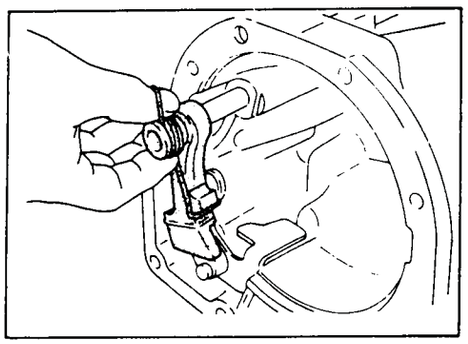

2. Remove return spring, pawl spacer and parking pawl from rear extension.
3. Remove parking pawl shaft from rear extension.

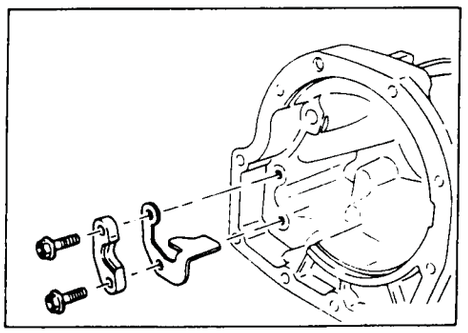

4. Remove parking actuator support and rod guide from rear extension.

Parking Pawl Components (Cont'd)

INSPECTION

Parking pawl and parking actuator support

- Check contact surface of parking rod for wear.

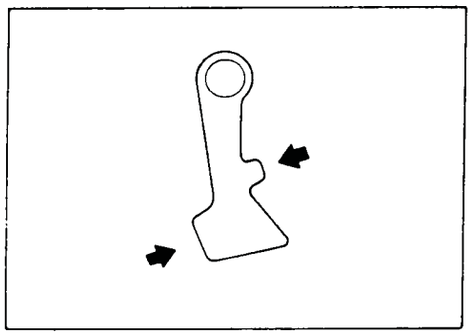

ASSEMBLY

1. Install rod guide and parking actuator support onto rear extension.
2. Insert parking pawl shaft into rear extension.

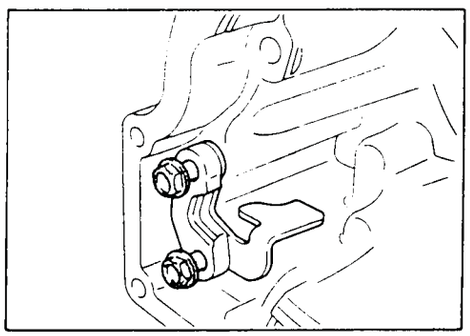

3. Install return spring, pawl spacer and parking pawl onto parking pawl shaft.

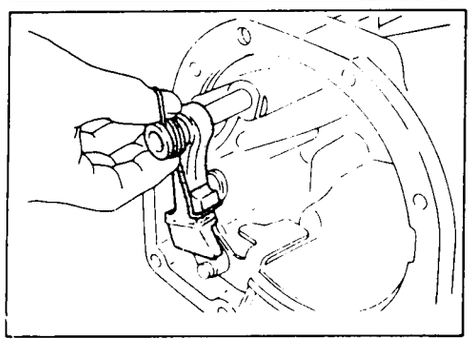

4. Bend return spring upward and install it onto rear extension.

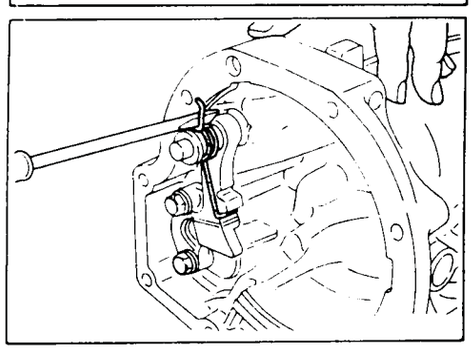

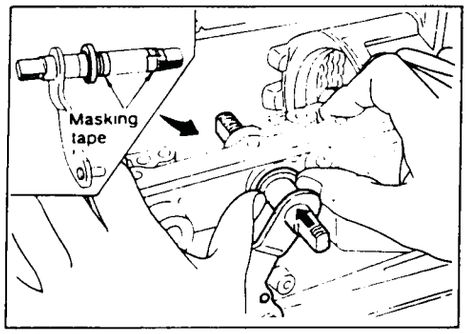

Assembly

1. Install manual shaft components.

a. Install oil seal onto manual shaft.

- **Apply A.T.F. to oil seal.**
- **Wrap threads of manual shaft with masking tape.**

b. Insert manual shaft and oil seal as a unit into transmission case.

c. Remove masking tape.

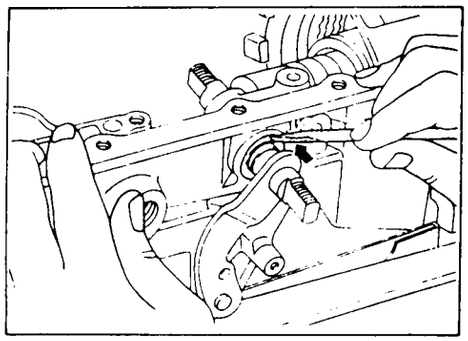

d. Push oil seal evenly and install it onto transmission case.

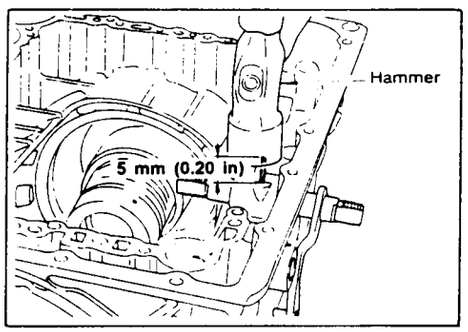

e. Align groove in shaft with drive pin hole, then drive pin into position as shown in figure at left.

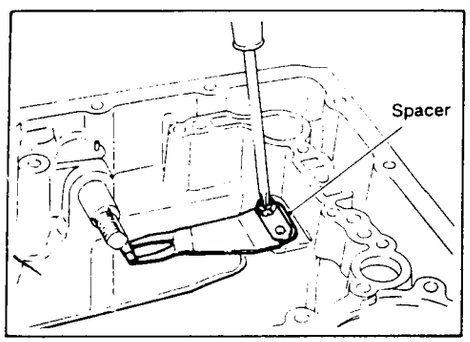

f. Install detent spring and spacer.

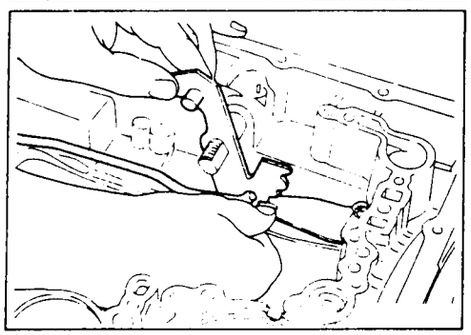

g. While pushing detent spring down, install manual plate onto manual shaft.

Assembly (Cont'd)

h. Install lock nuts onto manual shaft.

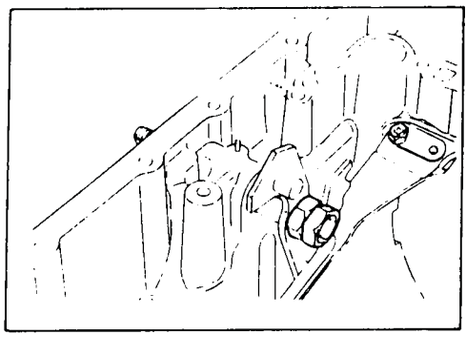

2. Install accumulator piston.
a. Install O-rings onto accumulator piston.
- **Apply A.T.F. to O-rings.**

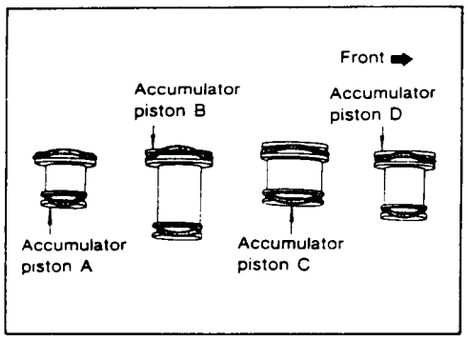

Accumulator piston O-rings: Unit: mm (in)

Accumulator	A	B	C	D
Small diameter end	29 (1.14)	32 (1.26)	45 (1.77)	29 (1.14)
Large diameter end	45 (1.77)	50 (1.97)	50 (1.97)	45 (1.77)

b. Install return spring for accumutator A onto transmission case.

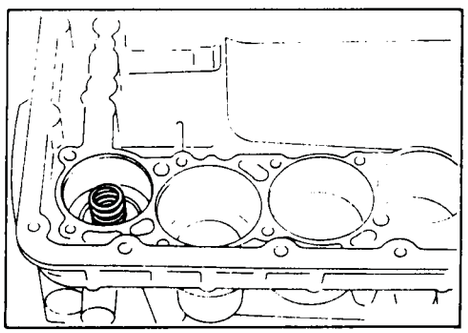

Free length of return spring: Unit: mm (in)

Accumulator	A
Free length	43 (1.69)

c. Install accumulator pistons A, B, C and D.
- **Apply A.T.F. to transmission case.**

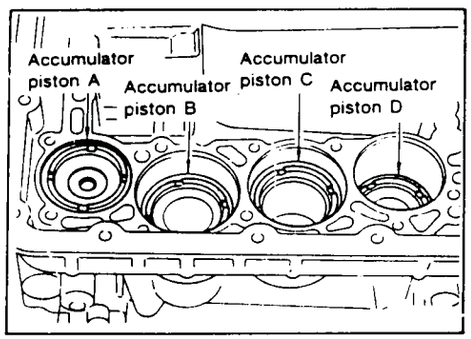

3. Install band servo piston.
a. Install return springs onto servo piston.

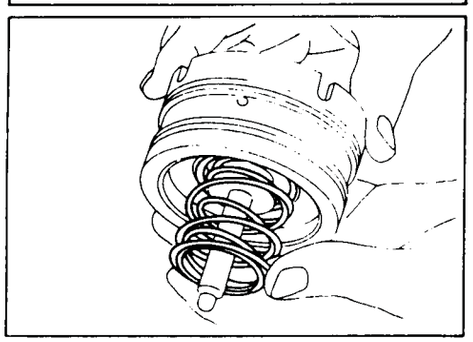

Assembly (Cont'd)

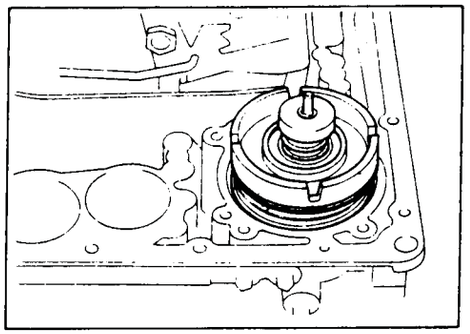

b. Install band servo piston onto transmission case.
- **Apply A.T.F. to O-ring of band servo piston and transmission case.**

c. Install gasket for band servo onto transmission case.

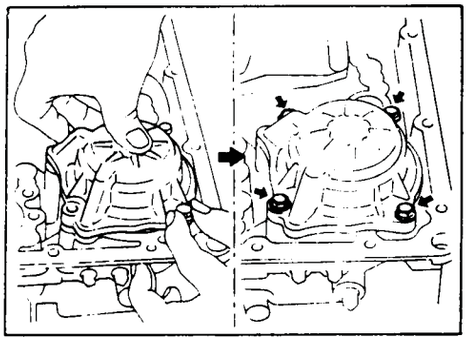

d. Install band servo retainer onto transmission case.

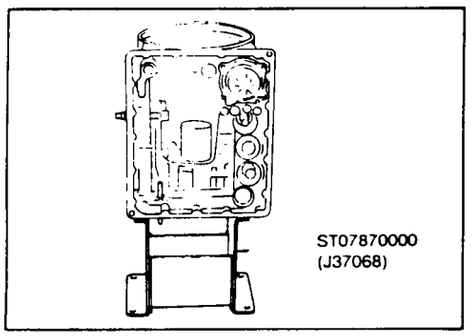

4. Install rear side clutch and gear components.

a. Place transmission case in vertical position.

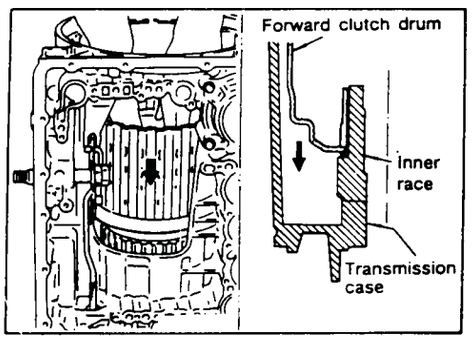

b. Slightly lift forward clutch drum assembly and slowly rotate it clockwise until its hub passes fully over the clutch inner race inside transmission case.

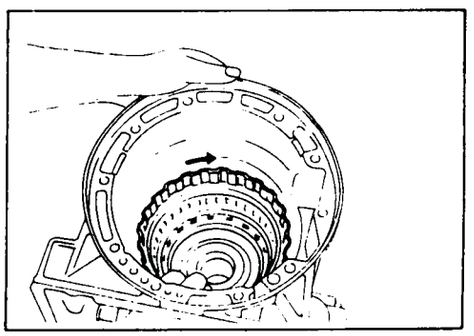

c. Check to be sure that rotation direction of forward clutch assembly is correct.

Assembly (Cont'd)

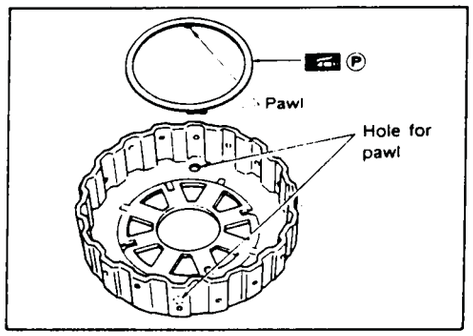

d. Install thrust washer onto front of overrun clutch hub.
- **Apply petroleum jelly to the thrust washer.**
- **Insert pawls of thrust washer securely into holes in overrun clutch hub.**

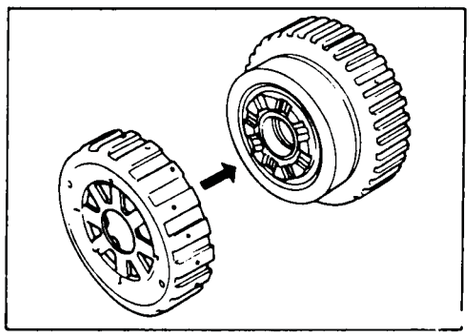

e. Install overrun clutch hub onto rear internal gear assembly.

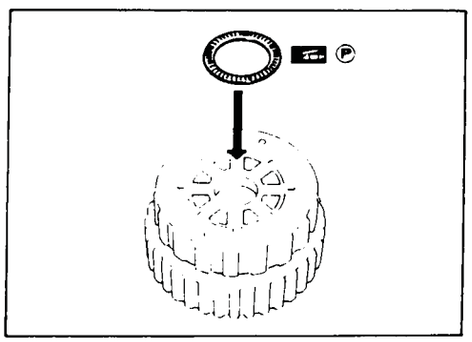

f. Install needle bearing onto rear of overrun clutch hub.
- **Apply petroleum jelly to needle bearing.**

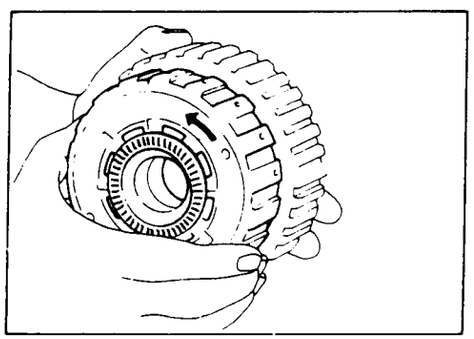

g. Check that overrun clutch hub rotates as shown while holding forward clutch hub.

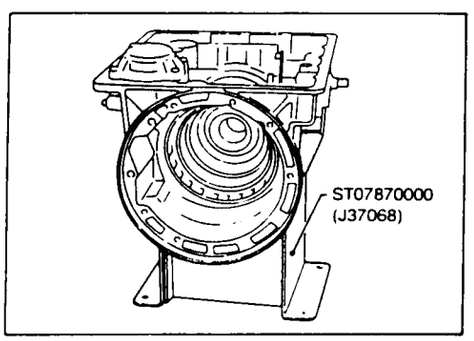

h. Place transmission case into horizontal position.

Assembly (Cont'd)

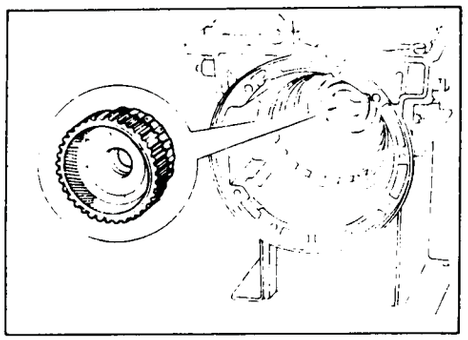

i. Install rear internal gear, forward clutch hub and overrun clutch hub as a unit onto transmission case.

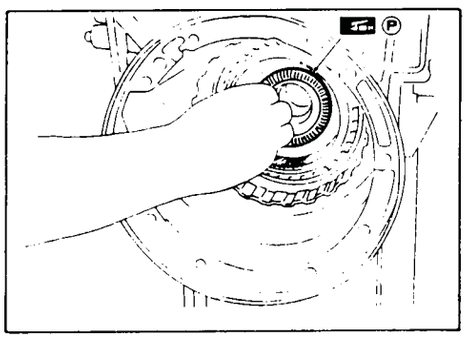

j. Install needle bearing onto rear internal gear.
- **Apply petroleum jelly to needle bearing.**

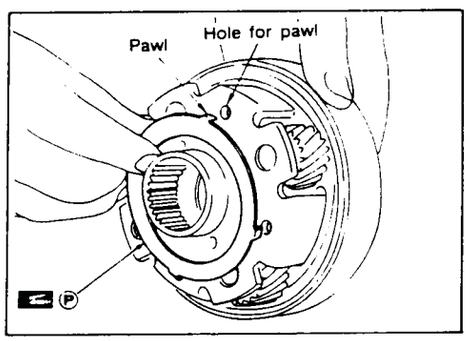

k. Install bearing race onto rear of front internal gear.
- **Apply petroleum jelly to bearing race.**
- **Securely engage pawls of bearing race with holes in front internal gear.**

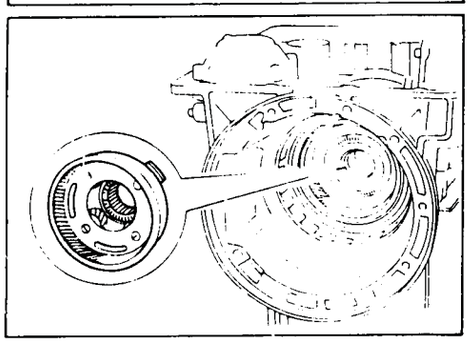

l. Install front internal gear on transmission case.

Adjustment

When any parts listed in the following table are replaced, total end play or reverse clutch end play must be adjusted.

Part name \ Item	Total end play	Reverse clutch end play
Transmission case	●	●
Low one-way clutch inner race	●	●
Overrun clutch hub	●	●
Rear internal gear	●	●
Rear planetary carrier	●	●
Rear sun gear	●	●
Front planetary carrier	●	●
Front sun gear	●	●
High clutch hub	●	●
High clutch drum	●	●
Oil pump cover	●	●
Reverse clutch drum	–	●

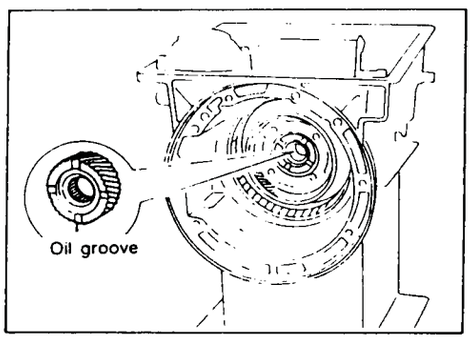

1. Install front side clutch and gear components.

a. Install rear sun gear on transmission case.

- **Pay attention to its direction.**

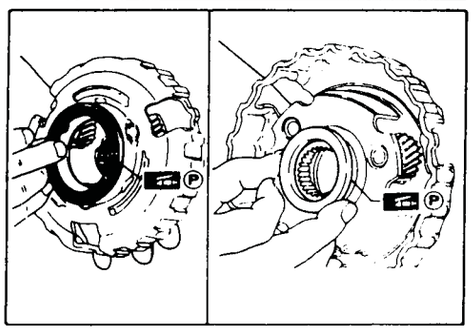

b. Install needle bearing on front of front planetary carrier.

- **Apply petroleum jelly to needle bearing.**

c. Install needle bearing on rear of front planetary carrier.

- **Apply petroleum jelly to bearing.**
- **Pay attention to its direction — Black side goes to front.**

Adjustment (Cont'd)

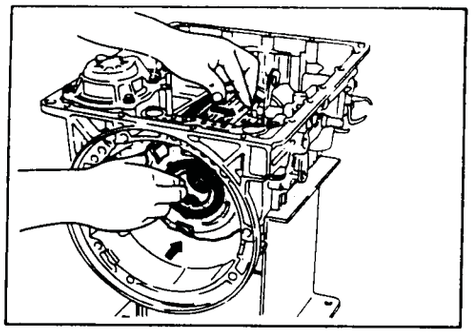

d. While rotating forward clutch drum clockwise, install front planetary carrier on forward clutch drum.

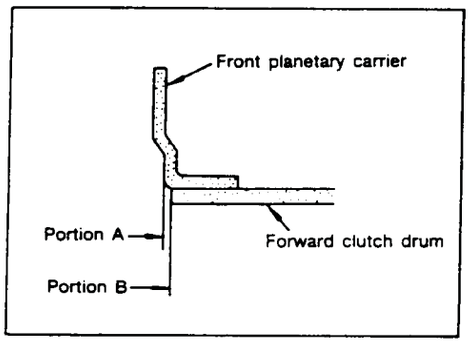

- **Check that portion A of front planetary carrier protrudes approximately 2 mm (0.08 in) beyond portion B of forward clutch assembly.**

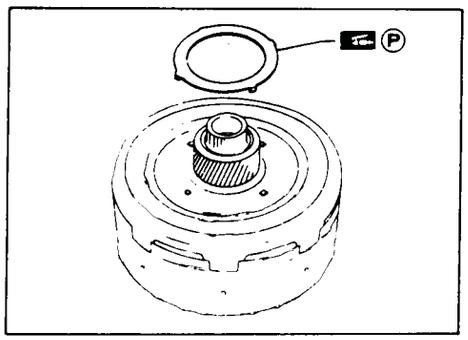

e. Install bearing races on rear of clutch pack.
- **Apply petroleum jelly to bearing races.**
- **Securely engage pawls of bearing race with hole in clutch pack.**

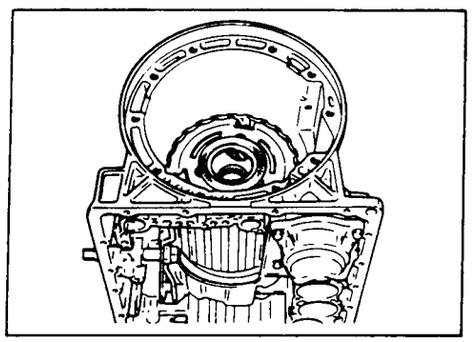

f. Place transmission case in vertical position.

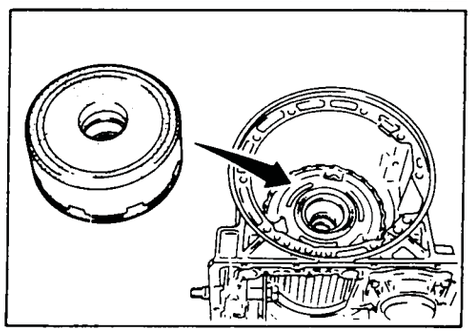

g. Install clutch pack into transmission case.

Adjustment (Cont'd)

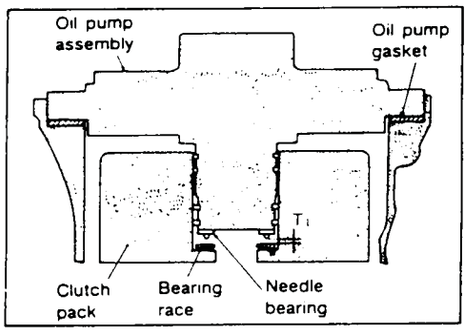

2. Adjust total end play.
   Total end play "T_1":
   0.25 - 0.55 mm (0.0098 - 0.0217 in)

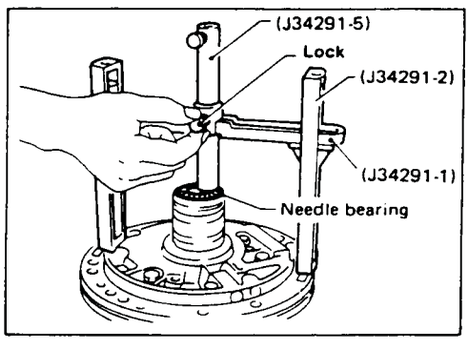

a. With needle bearing installed, place J34291-1 (bridge), J34291-2 (legs) and the J34291-5 (gauging cylinder) onto oil pump. The long ends of legs should be placed firmly on machined surface of oil pump assembly and gauging cylinder should rest on top of the needle bearing. Lock gauging cylinder in place with set screw.

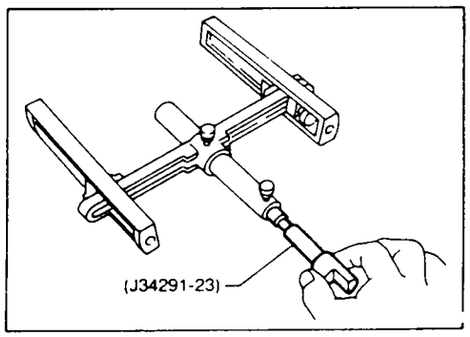

b. Install J34291-23 (gauging plunger) into gauging cylinder.

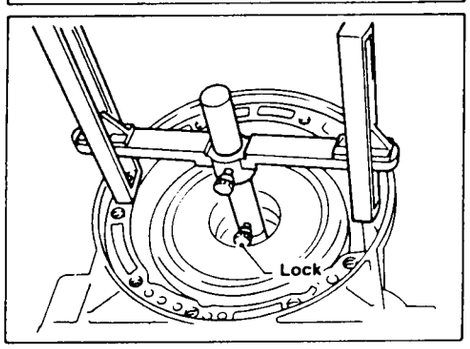

c. With original bearing race installed inside reverse clutch drum, place shim selecting gauge with its legs on machined surface of transmission case (no gasket) and allow gauging plunger to rest on bearing race. Lock gauging plunger in place with set screw.

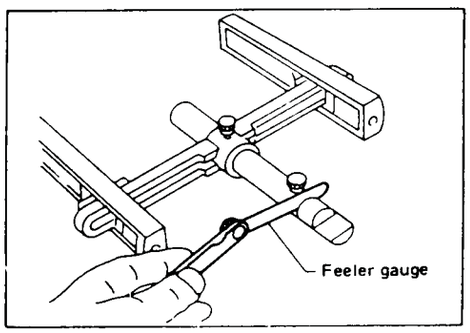

d. Remove Tool and use feeler gauge to measure gap between gauging cylinder and gauging plunger. This measurement should give exact total end play.
   Total end play "T_1":
   0.25 - 0.55 mm (0.0098 - 0.0217 in)

- If end play is out of specification, decrease or increase thickness of oil pump cover bearing race as necessary.
  Available oil pump cover bearing race:
  Refer to S.D.S.

Adjustment (Cont'd)

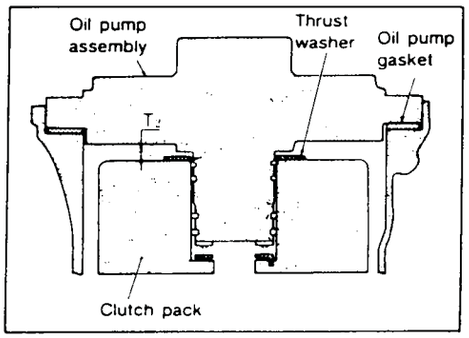

3. Adjust reverse clutch drum end play.
   Reverse clutch drum end play "T_2":
   0.55 - 0.90 mm (0.0217 - 0.0354 in)

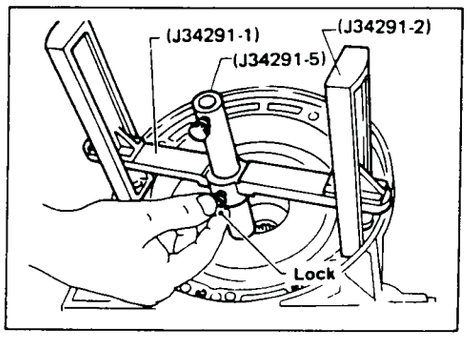

a. Place J34291-1 (bridge), J34291-2 (legs) and J34291-5 (gauging cylinder) on machined surface of transmission case (no gasket) and allow gauging cylinder to rest on front thrust surface of reverse clutch drum. Lock cylinder in place with set screw.

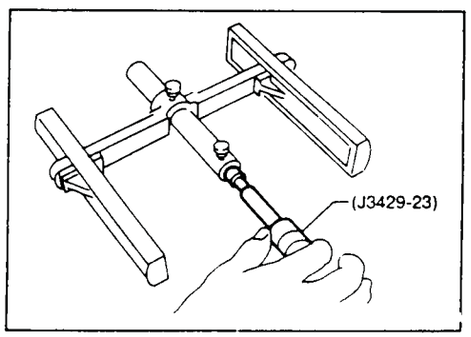

b. Install J34291-23 (gauging plunger) into gauging cylinder.

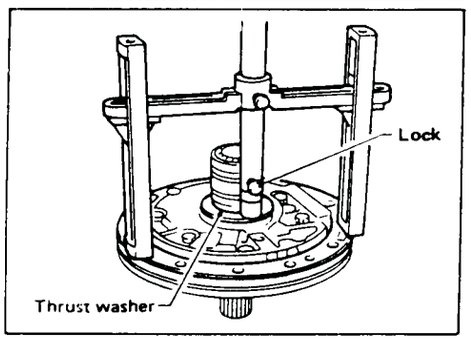

c. With original thrust washer installed on oil pump, place shim setting gauge legs onto machined surface of oil pump assembly and allow gauging plunger to rest on thrust washer. Lock plunger in place with set screw.

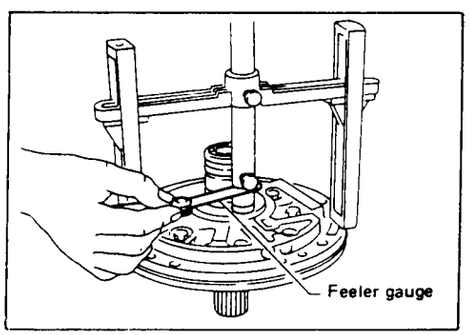

d. Use feeler gauge to measure gap between gauging plunger and gauging cylinder. This measurement should give you exact reverse clutch drum and play.
   Reverse clutch drum end play "T_2":
   0.55 - 0.90 mm (0.0217 - 0.0354 in)

- If end play is out of specification, decrease or increase thickness of oil pump thrust washer as necessary.
  Available oil pump thrust washer:
  Refer to S.D.S.

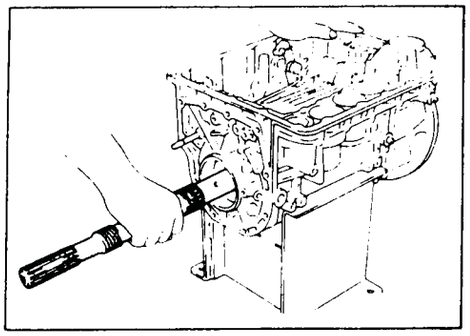

Assembly

1. Install output shaft and parking gear.

a. Insert output shaft from rear of transmission case while slightly lifting front internal gear.

- **Do not force output shaft against front of transmission case.**

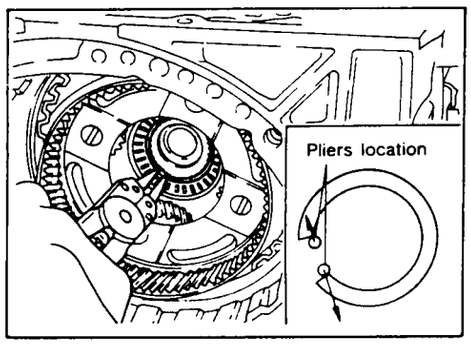

b. Carefully push output shaft against front of transmission case. Install snap ring on front of output shaft.

- **Check to be sure output shaft cannot be removed in rear direction.**

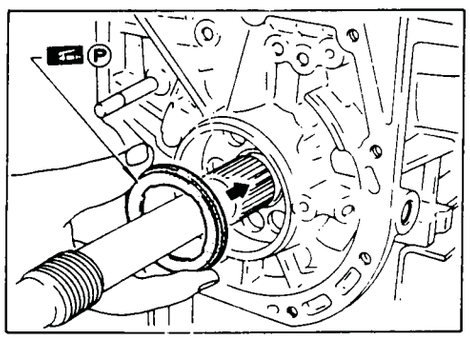

c. Install needle bearing on transmission case.

- **Pay attention to its direction — Black side goes to front.**
- **Apply petroleum jelly to needle bearing.**

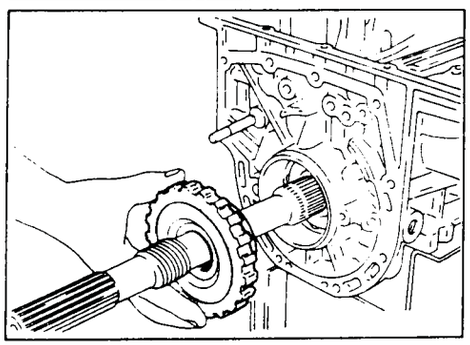

d. Install parking gear on transmission case.

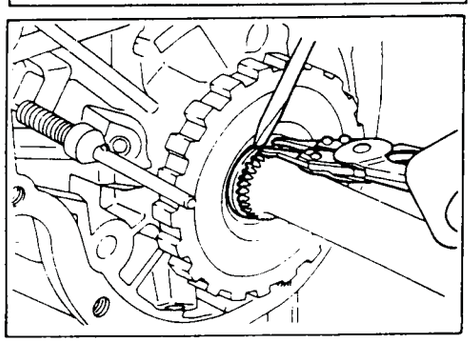

e. Install snap ring on rear of output shaft.

- **Check to be sure output shaft cannot be removed in forward direciton.**

Assembly (Cont'd)

2. Install rear extension.

a. Install oil seal on rear extension.

- **Apply A.T.F. to oil seal.**

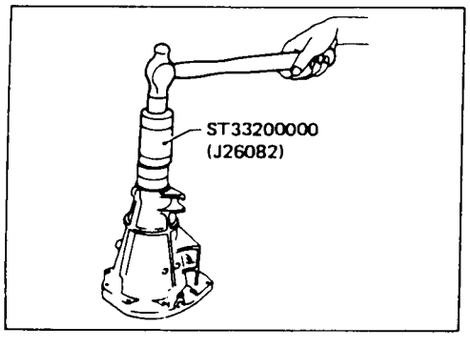

b. Install O-ring on revolution sensor.

- **Apply A.T.F. to O-ring.**

c. Install revolution sensor on rear extension.

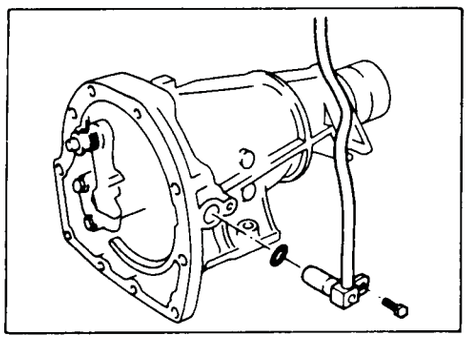

d. Install rear extension gasket on transmission case.

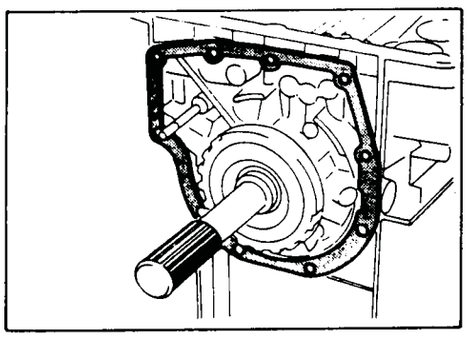

e. Install parking rod on transmission case.

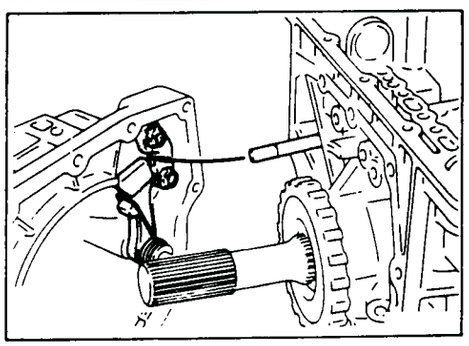

f. Install rear extension on transmission case.

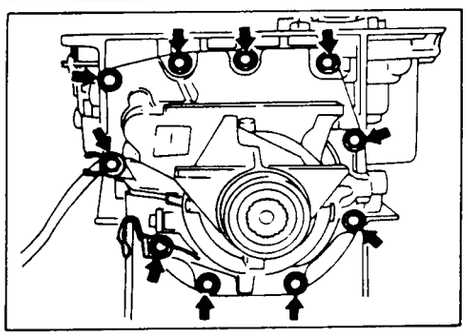

Assembly (Cont'd)

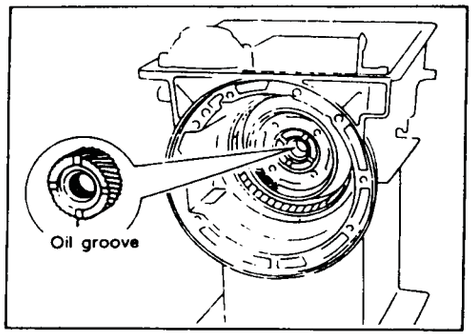

3. Install front side clutch and gear components.
a. Install rear sun gear on transmission case.
- **Pay attention to its direction.**

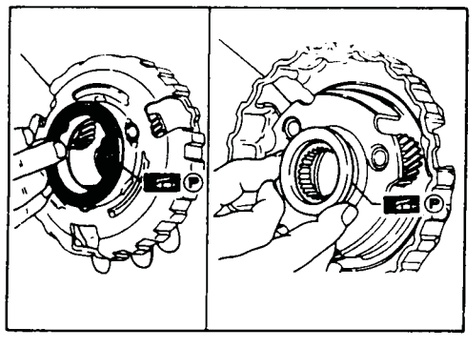

b. Make sure needle bearing is on front of front planetary carrier.
- **Apply petroleum jelly to needle bearing.**

c. Make sure needle bearing is on rear of front planetary carrier.
- **Apply petroleum jelly to bearing.**
- **Pay attention to its direction — Black side goes to front.**

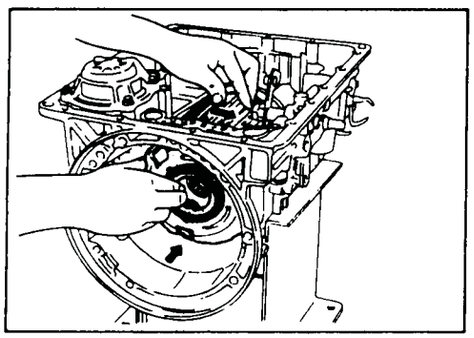

d. While rotating forward clutch drum clockwise, install front planetary carrier on forward clutch drum.

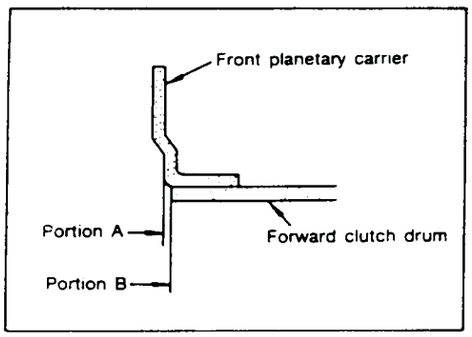

- **Check that portion A of front planetary carrier protrudes approximately 2 mm (0.08 in) beyond portion B of forward clutch assembly.**

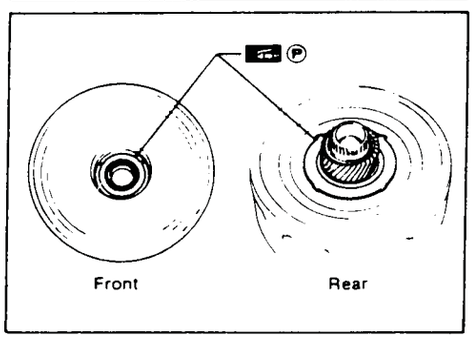

e. Make sure bearing races are on front and rear of clutch pack.
- **Apply petroleum jelly to bearing races.**
- **Securely engage pawls of bearing races with holes in clutch pack.**

Assembly (Cont'd)

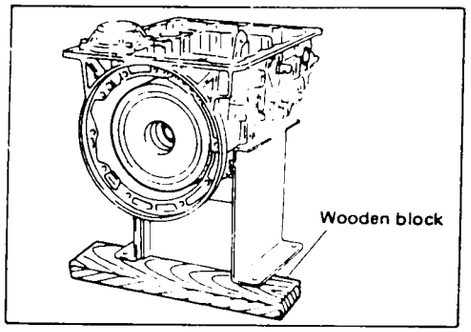

f. Install clutch pack into transmission case.

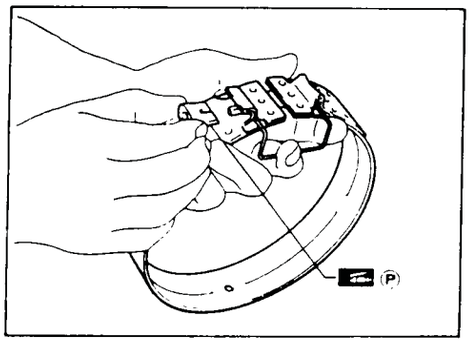

4. Install brake band and band strut.
a. Install band strut on brake band.
- **Apply petroleum jelly to band strut.**

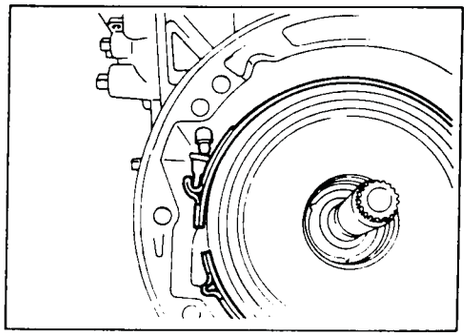

b. Place brake band on periphery of reverse clutch drum, and insert band strut into end of band servo piston stem.

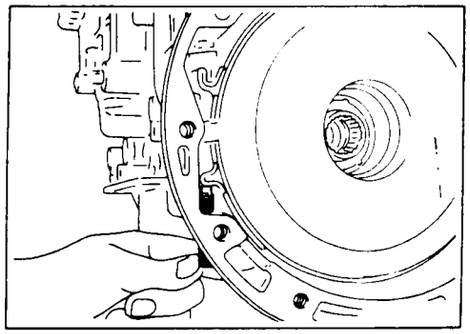

c. Install anchor end bolt on transmission case. Then, tighten anchor end bolt just enough so that reverse clutch drum (clutch pack) will not tilt forward.

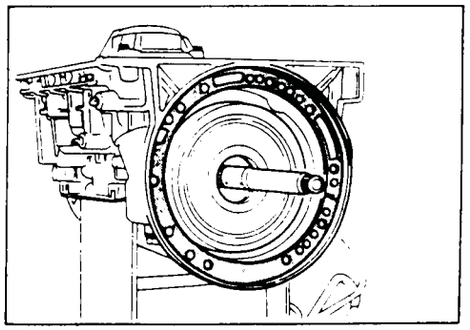

5. Install input shaft on transmission case.
- **Pay attention to its direction — O-ring groove side is front.**

6. Install gasket on transmission case.

Assembly (Cont'd)

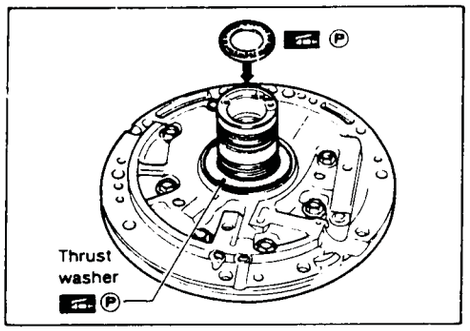

7. Install oil pump assembly.
a. Install needle bearing on oil pump assembly.
- **Apply petroleum jelly to the needle bearing.**

b. Install selected thrust washer on oil pump assembly.
- **Apply petroleum jelly to thrust washer.**

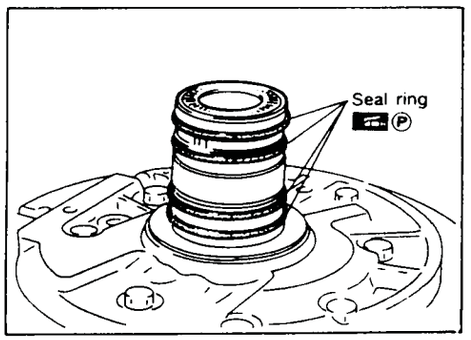

c. Carefully install seal rings into grooves and press them into the petroleum jelly so that they are a tight fit.

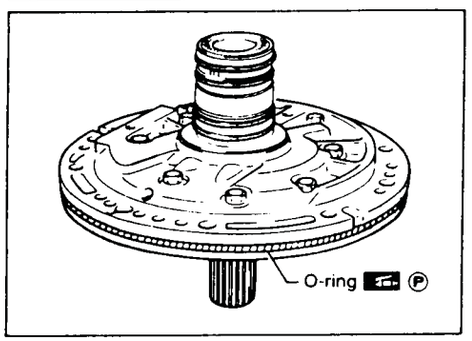

d. Install O-ring on oil pump assembly.
- **Apply petroleum jelly to O-ring.**

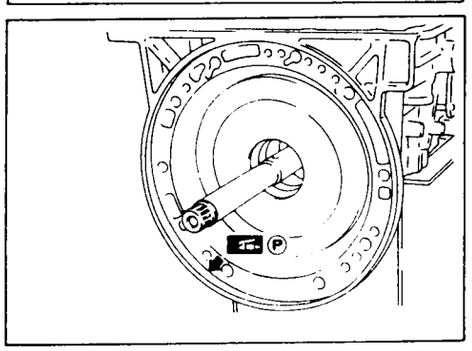

e. Apply petroleum jelly to mating surface of transmission case and oil pump assembly.

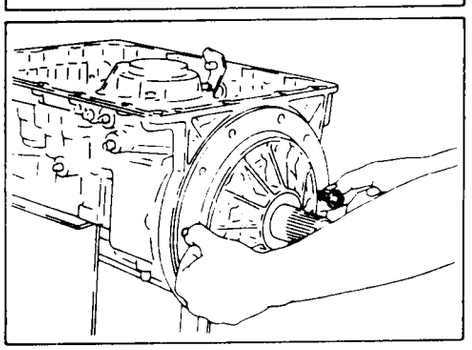

f. Install oil pump assembly.
- **Install two converter housing securing bolts in bolt holes in oil pump assembly as guides.**

Assembly (Cont'd)

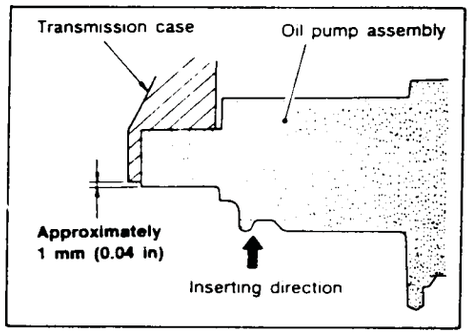

- **Insert oil pump assembly to the specified position in transmission, as shown at left.**

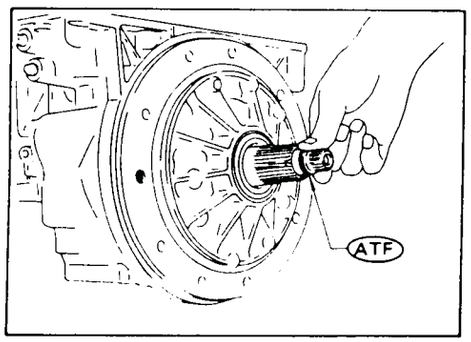

8. Install O-ring on input shaft.
- **Apply A.T.F. to O-rings.**

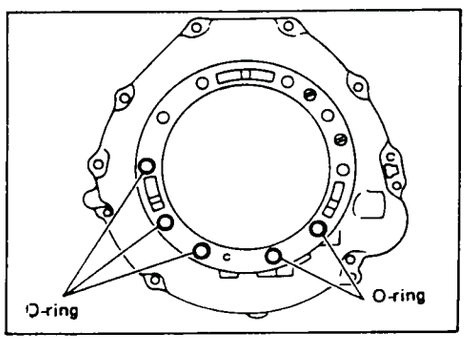

9. Install converter housing.
   Install O-rings on converter housing.

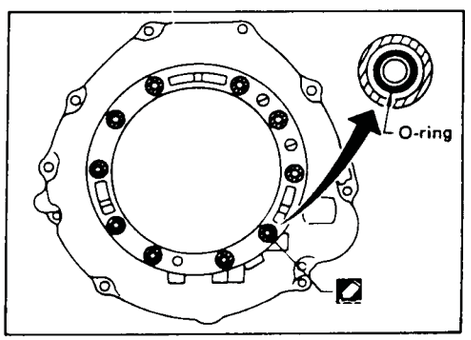

Apply recommended sealant (Nissan genuine part: KP610-00250 or equivalent) to outer periphery of bolt holes in converter housing.
- **Do not apply too much sealant.**

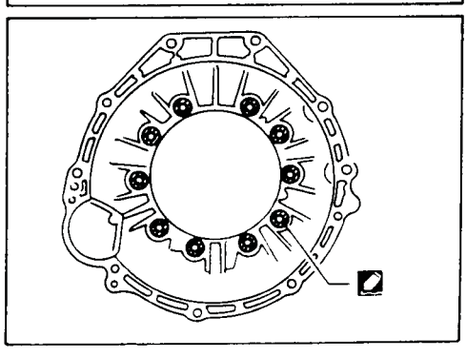

Apply recommended sealant (Nissan genuine part: KP610-00250 or equivalent) to seating surfaces of bolts that secure front of converter housing.

Assembly (Cont'd)

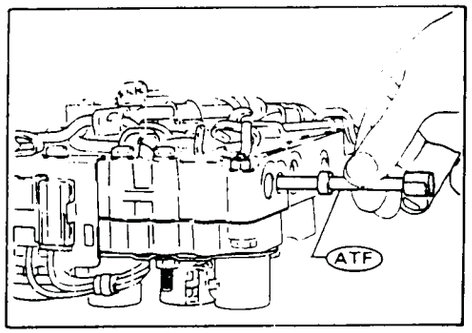

Install manual valve on control valve.

- **Apply A.T.F. to manual valve.**

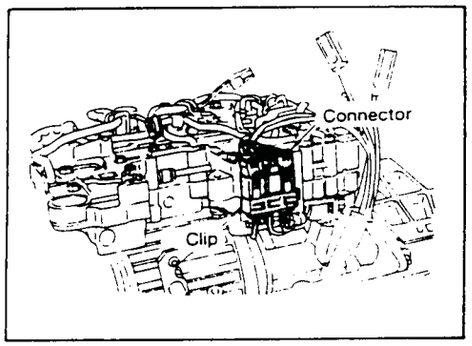

Place control valve assembly on transmission case. Connect solenoid connector for upper body.
Install connector clip.

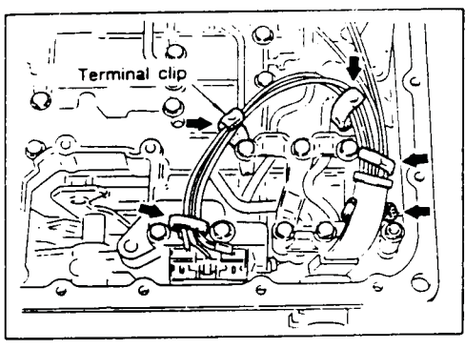

Securely fasten terminal harness with clips.

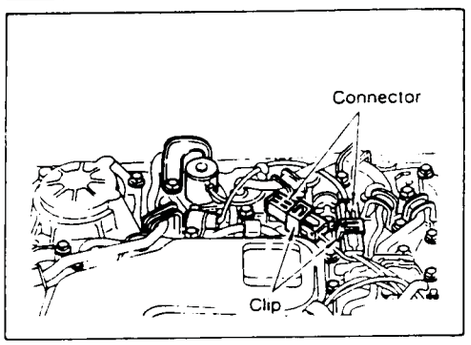

Install lock-up solenoid and fluid temperature sensor connectors.

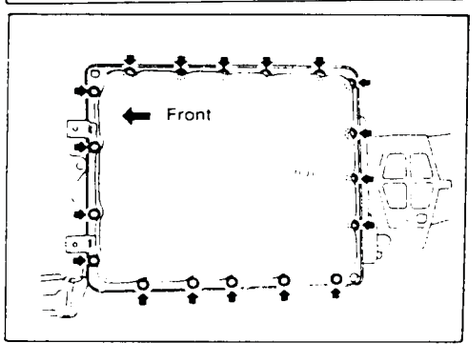

Install oil pan gasket on transmission case.
Install oil pan and bracket on transmission case.

- **Tighten four bolts in a criss-cross pattern to prevent dislocation of gasket.**

Low & reverse brake Number of drive plates	5	
Number of driven plates	7	
Thickness of drive plate mm (in) Standard Wear limit	 2.0 (0.079) 1.8 (0.071)	
Clearance mm (in) Standard Allowable limit	 1.1 - 1.5 (0.043 - 0.059) 2.5 (0.098)	
Thickness of retaining plate	Thickness mm (in)	Part number
	8.6 (0.339)	31667-41X03
	8.8 (0.346)	31667-41X04
	9.0 (0.354)	31667-41X05
	9.2 (0.362)	31667-41X06
	9.4 (0.370)	31667-41X09
	9.6 (0.378)	31667-41X10
Brake band Anchor end bolt tightening torque N·m (kg-m, ft-lb)	4 - 6 (0.4 - 0.6, 2.9 - 4.3)	
Number of returning revolutions for anchor end bolt	2.5	

OIL PUMP AND LOW ONE-WAY CLUTCH

Oil pump clearance mm (in) Cam ring — oil pump housing Standard	 0.01 - 0.024 (0.0004 - 0.0009)
Rotor, vanes and control piston — oil pump housing Standard	 0.03 - 0.044 (0.0012 - 0.0017)
Seal ring clearance mm (in) Standard Allowable limit	 0.10 - 0.25 (0.0039 - 0.0098) 0.25 (0.0098)

TOTAL END PLAY

Total end play "T_1"	0.25 - 0.55 mm (0.0098 - 0.0217 in)	
Thickness of oil pump cover bearing race	Thickness mm (in)	Part number
	0.8 (0.031)	31429-21X00
	1.0 (0.039)	31429-21X01
	1.2 (0.047)	31429-21X02
	1.4 (0.055)	31429-21X03
	1.6 (0.063)	31429-21X04
	1.8 (0.071)	31429-21X05
	2.0 (0.079)	31429-21X06

REVERSE CLUTCH DRUM END PLAY

Reverse clutch drum end play "T_3"	0.55 - 0.90 mm (0.0217 - 0.0354 in)	
Thickness of oil pump thrust washer	Thickness mm (in)	Part number
	0.7 (0.028)	31528-21X00
	0.9 (0.035)	31528-21X01
	1.1 (0.043)	31528-21X02
	1.3 (0.051)	31528-21X03
	1.5 (0.059)	31528-21X04
	1.7 (0.067)	31528-21X05
	1.9 (0.075)	31528-21X06

REMOVAL AND INSTALLATION

Manual control linkage Number of returning revolutions for lock nut	1
Lock nut tightening torque	11 - 15 N·m (1.1 - 1.5 kg-m, 8 - 11 ft-lb)
Distance between end of clutch housing and torque converter	26.0 mm (1.024 in) or more
Drive plate runout limit	0.5 mm (0.020 in)

Engine	KA24E
Automatic transmission model	RE4R01A
Transmission model code number	45X06
Stall torque ratio	2.0 : 1
Transmission gear ratio 1st 2nd Top O.D. Reverse	 2.785 1.545 1.000 0.694 2.272
Recommended oil	Automatic transmission fluid Type DEXRON™
Oil capacity ℓ (US qt, Imp qt)	8.3 (8-3/4, 7-1/4)

Specifications and Adjustment (Cont'd)

ACCUMULATOR O-RING

Accumulator	Diameter mm (in) A	B	C	D
Small diameter end	29 (1.14)	32 (1.26)	45 (1.77)	29 (1.14)
Large diameter end	45 (1.77)	50 (1.97)	50 (1.97)	45 (1.77)

CLUTCHES AND BRAKES

Reverse clutch		
Number of drive plates	2	
Number of driven plates	2	
Thickness of drive plate mm (in)		
Standard	2.0 (0.079)	
Wear limit	1.8 (0.071)	
Clearance mm (in)		
Standard	0.5 - 0.8 (0.020 - 0.031)	
Allowable limit	1.2 (0.047)	
Thickness of retaining plate	Thickness mm (in)	Part number
	4.6 (0.181)	31537-21X00
	4.8 (0.189)	31537-21X01
	5.0 (0.197)	31537-21X02
	5.2 (0.205)	31537-21X03
	5.4 (0.213)	31537-21X04
	5.6 (0.220)	31567-41X13
	5.8 (0.228)	31567-41X14
High clutch		
Number of drive plates	4	
Number of driven plates	4	
Thickness of drive plate mm (in)		
Standard	1.6 (0.063)	
Wear limit	1.4 (0.055)	
Clearance mm (in)		
Standard	1.8 - 2.2 (0.071 - 0.087)	
Allowable limit	3.0 (0.118)	
Thickness of retaining plate	Thickness mm (in)	Part number
	3.6 (0.142)	31537-41X61
	3.8 (0.150)	31537-41X62
	4.0 (0.157)	31537-41X63
	4.2 (0.165)	31537-41X64
	4.4 (0.173)	31537-41X65
	4.6 (0.181)	31537-41X66
	4.8 (0.189)	31537-41X67
	5.0 (0.197)	31537-41X68

Forward clutch		
Number of drive plates	5	
Number of driven plates	5	
Thickness of drive plate mm (in)		
Standard	2.0 (0.079)	
Wear limit	1.8 (0.071)	
Clearance mm (in)		
Standard	0.45 - 0.85 (0.0177 - 0.0335)	
Allowable limit	1.85 (0.0728)	
Thickness of retaining plate	Thickness mm (in)	Part number
	8.0 (0.315)	31537-41X00
	8.2 (0.323)	31537-41X01
	8.4 (0.331)	31537-41X02
	8.6 (0.339)	31537-41X03
	8.8 (0.346)	31537-41X04
	9.0 (0.354)	31537-41X05
	9.2 (0.362)	31537-41X06
Overrun clutch		
Number of drive plates	3	
Number of driven plates	5	
Thickness of drive plate mm (in)		
Standard	2.0 (0.079)	
Wear limit	1.8 (0.071)	
Clearance mm (in)		
Standard	1.0 - 1.4 (0.039 - 0.055)	
Allowable limit	2.0 (0.079)	
Thickness of retaining plate	Thickness mm (in)	Part number
	4.0 (0.157)	31537-41X79
	4.2 (0.165)	31537-41X80
	4.4 (0.173)	31537-41X81
	4.6 (0.181)	31537-41X82
	4.8 (0.189)	31537-41X83
	5.0 (0.197)	31537-41X84
	5.2 (0.205)	31537-41X20

Specifications and Adjustment (Cont'd)

RETURN SPRINGS

Unit: mm (in)

Parts		Item	Part No.	Free length	Outer diameter
Control valve	Upper body	Torque converter relief valve spring	31742-41X18	32.3 (1.272)	9.0 (0.354)
		Pressure regulator valve spring	31742-41X16	61.5 (2.421)	8.9 (0.350)
		Pressure modifier valve spring	31742-41X19	31.95 (1.2579)	6.8 (0.268)
		Shuttle shift valve D spring	31762-41X00	26.5 (1.043)	6.0 (0.236)
		4-2 sequence valve spring	31756-41X00	29.1 (1.146)	6.95 (0.2736)
		Shift valve B spring	31762-41X01	25.0 (0.984)	7.0 (0.276)
		4-2 relay valve spring	31756 -41X00	29.1 (1.146)	6.95 (0.2736)
		Shift valve A spring	31762-41X01	25.0 (0.984)	7.0 (0.276)
		Overrun clutch control valve spring	31762-41X03	23.6 (0.929)	7.0 (0.276)
		Overrun clutch reducing valve spring	31742-41X20	32.5 (1.280)	7.0 (0.276)
		Shuttle shift valve S spring	31762-41X04	51.0 (2.008)	5.65 (0.2224)
		Pilot valve spring	31742-41X13	25.7 (1.012)	9.1 (0.358)
		Lock-up control valve spring	31742-41X22	18.5 (0.728)	13.0 (0.512)
	Lower body	Modifier accumulator piston spring	31742-41X15	30.5 (1.201)	9.8 (0.386)
		1st reducing valve spring	31756-41X05	25.4 (1.000)	6.75 (0.2657)
		3-2 timing valve spring	31742-41X08	20.55 (0.8091)	6.75 (0.2657)
		Servo charger valve spring	31742-41X06	23.0 (0.906)	6.7 (0.264)
Reverse clutch		16 pcs	30505-41X02	19.69 (0.7752)	11.6 (0.457)
High clutch		16 pcs	31505-21X03	22.06 (0.8685)	11.6 (0.457)
Forward clutch (Overrun clutch)		20 pcs	31505-41X01	35.77 (1.4083)	9.7 (0.382)
Low & reverse brake		18 pcs	31521-21X00	23.7 (0.933)	11.6 (0.457)
Band servo		Spring A	31605-41X05	45.6 (1.795)	34.3 (1.350)
		Spring B	31605-41X00	53.8 (2.118)	40.3 (1.587)
		Spring C	31605-41X01	29.0 (1.142)	27.6 (1.087)
Accumulator		Accumulator A	31605-41X02	43.0 (1.693)	
		Accumulator B	31605-41X10	66.0 (2.598)	
		Accumulator C	31605-41X09	45.0 (1.772)	
		Accumulator D	31605-41X06	58.0 (2.283)	

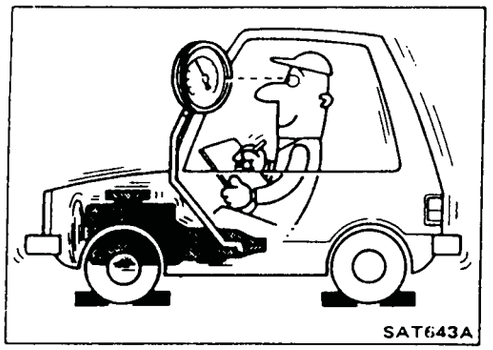

Start engine and measure line pressure at idle and stall speed.

- **When measuring line pressure at stall speed, follow the stall test procedure.**

Line pressure:

Engine speed rpm	Line pressure kPa (kg/cm^2, psi)	
	D, 2 and 1 ranges	R range
Idle	471 - 510 (4.8 - 5.2, 68 - 74)	657 - 696 (6.7 - 7.1, 95 - 101)
Stall	1,020 - 1,098 (10.4 - 11.2, 148 - 159)	1,422 - 1,500 (14.5 - 15.3, 206 - 218)

JUDGEMENT OF LINE PRESSURE TEST

	Judgement	Suspected parts
At idle	Line pressure is low in all ranges.	• Oil pump wear • Control piston damage • Pressure regulator valve or plug sticking • Spring for pressure regulator valve damaged • Fluid pressure leakage between oil strainer and pressure regulator valve
	Line pressure is low in particular range.	• Fluid pressure leakage between manual valve and particular clutch. • For example; If line pressure is low in "R" and "1" ranges but is normal in "D" and "2" range, fluid leakage exists at or around low & reverse brake circuit.
	Line pressure is high.	• Mal-adjustment of throttle sensor • Fluid temperature sensor damaged • Line pressure solenoid sticking • Short circuit of line pressure solenoid circuit • Pressure modifier valve sticking • Pressure regulator valve or plug sticking
At stall speed	Line pressure is low.	• Mal-adjustment of throttle sensor • Control piston damaged • Line pressure solenoid sticking • Short circuit of line pressure solenoid circuit • Pressure regulator valve or plug sticking • Pressure modifier valve sticking • Pilot valve sticking

RE4R01A ELECTRONIC TESTS

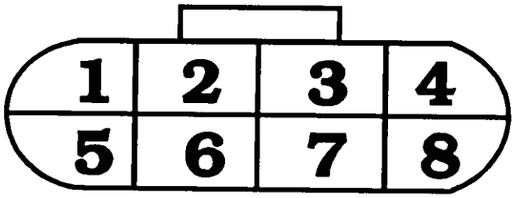

Pin 1 is Shift Solenoid B.

Pin 2 is Shift Solenoid A.

Pin 3 is the Overrun Solenoid.

Pin 4 is the EPC Solenoid.

Pin 5 is the Converter Clutch Solenoid.

Pins 6 and 7 are The TOT Sensor wires.

OHMS TESTS

Shift Solenoids should be 20-30 Ohms.

Overrun Solenoid should be 20-30 Ohms.

Converter Clutch Solenoid should be 10-16 Ohms.

EPC Solenoid should be 2-5 Ohms.

TOT Sensor reading across Pins 6 and 7 should be about 2.5 K Ohms at 68' F. and about 300 Ohms at 175' F.

APPLICATION	SOL. 1	SOL. 2	OVERRUN SOL.
FIRST GEAR	ON	ON	*
SECOND GEAR		ON	*
THIRD GEAR			*
FOURTH GEAR	ON		

* Engine braking provided if on.