AUTOMATIC TRANSAXLE

SECTION AT

GI
MA
EM
LC
EC
FE
AT
AX
SU
BR
ST
RS
BT
HA
SC
EL
IDX

CONTENTS

CONTENTS (Cont'd)

CONTENTS (Cont'd)

CONTENTS (Cont'd)

Alphabetical & P No. Index for DTC

NHAT0001

ALPHABETICAL INDEX FOR DTC

NHAT0001S01

Items (CONSULT-II screen terms)	DTC CONSULT-II GST*1	Reference page
A/T 1ST GR FNCTN	P0731	AT-130
A/T 2ND GR FNCTN	P0732	AT-136
A/T 3RD GR FNCTN	P0733	AT-142
A/T 4TH GR FNCTN	P0734	AT-148
A/T TCC S/V FNCTN	P0744	AT-162
ATF TEMP SEN/CIRC	P0710	AT-114
CAN COMM CIRCUIT	U1000	AT-104
ENGINE SPEED SIG	P0725	AT-125
L/PRESS SOL/CIRC	P0745	AT-172
O/R CLTCH SOL/CIRC	P1760	AT-194
PNP SW/CIRC	P0705	AT-108
SFT SOL A/CIRC*2	P0750	AT-178
SFT SOL B/CIRC*2	P0755	AT-183
TCC SOLENOID/CIRC	P0740	AT-157
TP SEN/CIRC A/T*2	P1705	AT-188
VEH SPD SEN/CIR AT*3	P0720	AT-120

*1: These numbers are prescribed by SAE J2012.

*2: When the fail-safe operation occurs, the MIL illuminates.

*3: The MIL illuminates when both the “Revolution sensor signal” and the “Vehicle speed sensor signal” meet the fail-safe condition at the same time.

P NO. INDEX FOR DTC

=NHAT0001S02

DTC CONSULT-II GST*1	Items (CONSULT-II screen terms)	Reference page
P0705	PNP SW/CIRC	AT-108
P0710	ATF TEMP SEN/CIRC	AT-114
P0720	VEH SPD SEN/CIR AT*3	AT-120
P0725	ENGINE SPEED SIG	AT-125
P0731	A/T 1ST GR FNCTN	AT-130
P0732	A/T 2ND GR FNCTN	AT-136
P0733	A/T 3RD GR FNCTN	AT-142
P0734	A/T 4TH GR FNCTN	AT-148
P0740	TCC SOLENOID/CIRC	AT-157
P0744	A/T TCC S/V FNCTN	AT-162
P0745	L/PRESS SOL/CIRC	AT-172
P0750	SFT SOL A/CIRC*2	AT-178
P0755	SFT SOL B/CIRC*2	AT-183
P1705	TP SEN/CIRC A/T*2	AT-188
P1760	O/R CLTCH SOL/CIRC	AT-194
U1000	CAN COMM CIRCUIT	AT-104

*1: These numbers are prescribed by SAE J2012.

*2: When the fail-safe operation occurs, the MIL illuminates.

*3: The MIL illuminates when both the "Revolution sensor signal" and the "Vehicle speed sensor signal" meet the fail-safe condition at the same time.

Precautions for Supplemental Restraint System (SRS) "AIR BAG" and "SEAT BELT PRE-TENSIONER"

NHAT0002

The Supplemental Restraint System such as "AIR BAG" and "SEAT BELT PRE-TENSIONER", used along with a front seat belt, helps to reduce the risk or severity of injury to the driver and front passenger for certain types of collision. This system includes seat belt switch inputs and dual stage front air bag modules. The SRS system uses the seat belt switches to determine the front air bag deployment, and may only deploy one front air bag, depending on the severity of a collision and whether the front occupants are belted or unbelted.
Information that is necessary to service the system safely is included in the RS section of this Service Manual.

WARNING:

- **To avoid rendering the SRS inoperative, which could increase the risk of personal injury or death in the event of a collision which would result in air bag inflation, all maintenance must be performed by an authorized NISSAN/INFINITI dealer.**
- **Improper maintenance, including incorrect removal and installation of the SRS, can lead to personal injury caused by unintentional activation of the system. For removal of Spiral Cable and Air Bag Module, see the RS section.**
- **Do not use electrical test equipment on any circuit related to the SRS unless instructed to in this Service Manual. SRS wiring harnesses can be identified by yellow and/or orange harnesses or harness connectors.**

Precautions for On Board Diagnostic (OBD) System of A/T and Engine

NHAT0003

The ECM has an on board diagnostic system. It will light up the malfunction indicator lamp (MIL) to warn the driver of a malfunction causing emission deterioration.

CAUTION:

- **Be sure to turn the ignition switch OFF and disconnect the negative battery terminal before any repair or inspection work. The open/short circuit of related switches, sensors, solenoid valves, etc. will cause the MIL to light up.**
- **Be sure to connect and lock the connectors securely after work. A loose (unlocked) connector will cause the MIL to light up due to an open circuit. (Be sure the connector is free from water, grease, dirt, bent terminals, etc.)**
- **Be sure to route and secure the harnesses properly after work. Interference of the harness with a bracket, etc. may cause the MIL to light up due to a short circuit.**
- **Be sure to connect rubber tubes properly after work. A misconnected or disconnected rubber tube may cause the MIL to light up due to a malfunction of the EGR system or fuel injection system, etc.**
- **Be sure to erase the unnecessary malfunction information (repairs completed) from the TCM or ECM before returning the vehicle to the customer.**

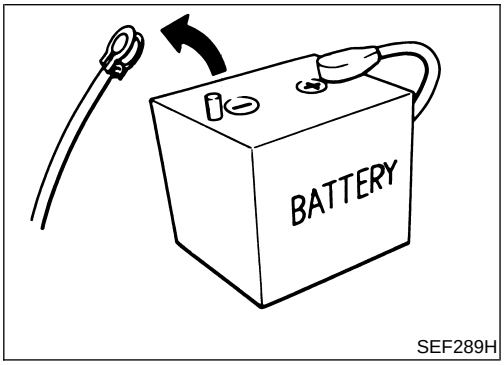

SEF289H

Precautions

NHAT0004

- **Before connecting or disconnecting the TCM harness connector, turn ignition switch OFF and disconnect negative battery terminal. Failure to do so may damage the TCM. Because battery voltage is applied to TCM even if ignition switch is turned off.**

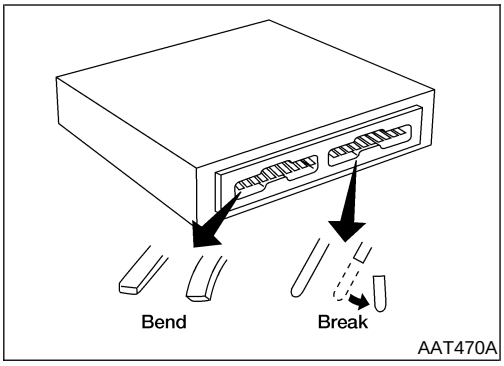

- **When connecting or disconnecting pin connectors into or from TCM, take care not to damage pin terminals (bend or break).**
  Make sure that there are not any bends or breaks on TCM pin terminal, when connecting pin connectors.

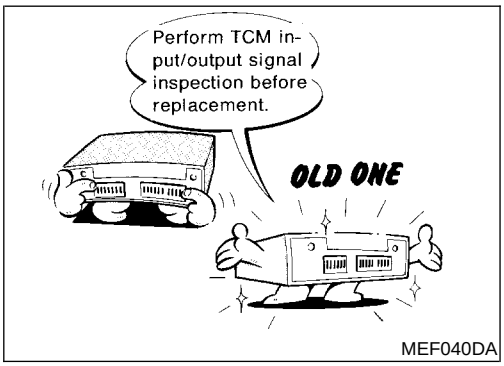

- **Before replacing TCM, perform TCM input/output signal inspection and make sure whether TCM functions properly or not. (See page AT-98.)**

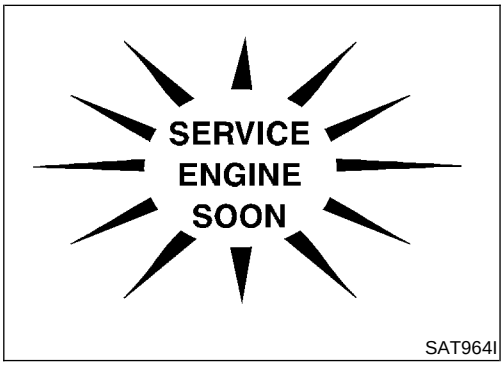

- **After performing each TROUBLE DIAGNOSIS, perform "DTC (Diagnostic Trouble Code) CONFIRMATION PROCEDURE".**
  The DTC should not be displayed in the "DTC CONFIRMATION PROCEDURE" if the repair is completed.

- Before proceeding with disassembly, thoroughly clean the outside of the transaxle. It is important to prevent the internal parts from becoming contaminated by dirt or other foreign matter.
- Disassembly should be done in a clean work area.
- Use lint-free cloth or towels for wiping parts clean. Common shop rags can leave fibers that could interfere with the operation of the transaxle.
- Place disassembled parts in order for easier and proper assembly.
- All parts should be carefully cleaned with a general purpose, non-flammable solvent before inspection or reassembly.
- Gaskets, seals and O-rings should be replaced any time the transaxle is disassembled.
- It is very important to perform functional tests whenever they are indicated.
- The valve body contains precision parts and requires extreme care when parts are removed and serviced. Place disassembled valve body parts in order for easier and proper assembly. Care will also prevent springs and small parts from becoming scattered or lost.
- Properly installed valves, sleeves, plugs, etc. will slide along bores in valve body under their own weight.
- Before assembly, apply a coat of recommended ATF to all

parts. Apply petroleum jelly to protect O-rings and seals, or hold bearings and washers in place during assembly. Do not use grease.

- Extreme care should be taken to avoid damage to O-rings, seals and gaskets when assembling.
- Replace ATF cooler if excessive foreign material is found in oil pan or clogging strainer. Refer to "ATF COOLER SERVICE" (Refer to AT-10).
- After overhaul, refill the transaxle with new ATF.
- When the A/T drain plug is removed, only some of the fluid is drained. Old A/T fluid will remain in torque converter and ATF cooling system.
  Always follow the procedures under MA-21, "Changing A/T Fluid" when changing A/T fluid.

Service Notice or Precautions

NHAT0005

FAIL-SAFE

NHAT0005S01

The TCM has an electronic Fail-Safe (limp home mode). This allows the vehicle to be driven even if a major electrical input/output device circuit is damaged.
Under Fail-Safe, the vehicle always runs in third gear, even with a shift lever position of 1st, 2nd or D. The customer may complain of sluggish or poor acceleration.
When the ignition key is turned ON following Fail-Safe operation, A/T CHECK indicator lamp blinks for about 8 seconds. [For "TCM Self-diagnostic Procedure (No Tools)", refer to AT-52.]
The blinking of the A/T CHECK indicator lamp for about 8 seconds will appear only once and be cleared. The customer may resume normal driving conditions.
Always follow the "Work Flow" (Refer to AT-62).
The SELF-DIAGNOSIS results will be as follows:

- The first SELF-DIAGNOSIS will indicate damage to the vehicle speed sensor or the revolution sensor.
- During the next SELF-DIAGNOSIS, performed after checking the sensor, no damages will be indicated.

TORQUE CONVERTER SERVICE

NHAT0005S02

The torque converter should be replaced under any of the following conditions:

- External leaks in the hub weld area.
- Converter hub is scored or damaged.
- Converter pilot is broken, damaged or fits poorly into crankshaft.
- Steel particles are found after flushing the cooler and cooler lines.
- Pump is damaged or steel particles are found in the converter.
- Vehicle has TCC shudder and/or no TCC apply. Replace only after all hydraulic and electrical diagnoses have been made. (Converter clutch material may be glazed.)
- Converter is contaminated with engine coolant containing antifreeze.
- Internal failure of stator roller clutch.
- Heavy clutch debris due to overheating (blue converter).
- Steel particles or clutch lining material found in fluid filter or on magnet when no internal parts in unit are worn or damaged — indicates that lining material came from converter.
  The torque converter should not be replaced if:
- The fluid has an odor, is discolored, and there is no evidence of metal or clutch facing particles.
- The threads in one or more of the converter bolt holes are damaged.

- Transaxle malfunction did not display evidence of damaged or worn internal parts, steel particles or clutch plate lining material in unit and inside the fluid filter.
- Vehicle has been exposed to high mileage (only). The exception may be where the torque converter clutch dampener plate lining has seen excess wear by vehicles operated in heavy and/or constant traffic, such as taxi, delivery or police use.

ATF COOLER SERVICE

NHAT0005S03

If A/T fluid contains frictional material (clutches, bands, etc.), replace radiator and flush cooler line using cleaning solvent and compressed air after repair of A/T. Refer to LC-20, "Radiator".

OBD-II SELF-DIAGNOSIS

NHAT0005S04

- A/T self-diagnosis is performed by the TCM in combination with the ECM. The results can be read through the blinking pattern of the A/T CHECK indicator lamp or the malfunction indicator lamp (MIL). Refer to the table on AT-42 for the indicator used to display each self-diagnostic result.
- The self-diagnostic results indicated by the MIL are automatically stored in both the ECM and TCM memories.
  Always perform the procedure "HOW TO ERASE DTC" on AT-38 to complete the repair and avoid unnecessary blinking of the MIL.
- The following self-diagnostic items can be detected using ECM self-diagnostic results mode* only when the A/T CHECK indicator lamp does not indicate any malfunctions.

− park/neutral position (PNP) switch
− A/T 1st, 2nd, 3rd, or 4th gear function
− A/T TCC S/V function (lock-up).
  *: For details of OBD-II, refer to EC-74, "ON BOARD DIAGNOSTIC SYSTEM DESCRIPTION".

- **Certain systems and components, especially those related to OBD, may use a new style slide-locking type harness connector.**
  For description and how to disconnect, refer to EL-7, "Description".

Wiring Diagrams and Trouble Diagnosis

NHAT0006

When you read wiring diagrams, refer to the following:

- GI-11, "HOW TO READ WIRING DIAGRAMS"
- EL-11, "POWER SUPPLY ROUTING" for power distribution circuit

When you perform trouble diagnosis, refer to the following:

- GI-36, "HOW TO FOLLOW TEST GROUPS IN TROUBLE DIAGNOSES"
- GI-25, "HOW TO PERFORM EFFICIENT DIAGNOSIS FOR AN ELECTRICAL INCIDENT"

Special Service Tools

NHAT0007

The actual shapes of Kent-Moore tools may differ from those of special service tools illustrated here.

Tool number (Kent-Moore No.) Tool name	Description	
KV381054S0 (J34286) Puller	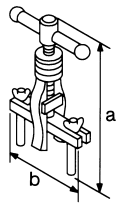 NT414	● Removing differential side oil seals ● Removing differential side bearing outer race ● Removing idler gear bearing outer race **a: 250 mm (9.84 in)** **b: 160 mm (6.30 in)**
ST33400001 (J26082) Drift	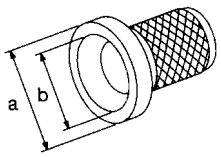 NT086	● Installing differential side oil seal ● Installing oil seal on oil pump housing **a: 60 mm (2.36 in) dia.** **b: 47 mm (1.85 in) dia.**
(J34301-C) Oil pressure gauge set 1 (J34301-1) Oil pressure gauge 2 (J34301-2) Hoses 3 (J34298) Adapter 4 (J34282-2) Adapter 5 (790-301-1230-A) 60° Adapter 6 (J34301-15) Square socket	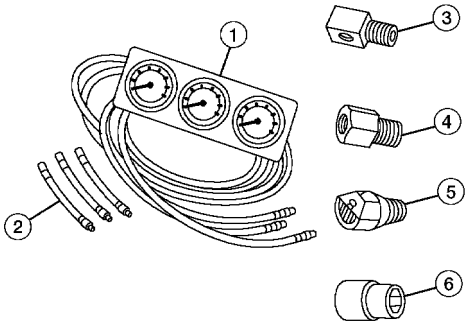 AAT896	● Measuring line pressure
ST27180001 (J25726-A) Puller	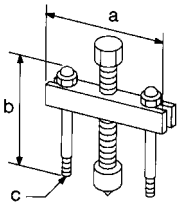 NT424	● Removing idler gear **a: 100 mm (3.94 in)** **b: 110 mm (4.33 in)** **c: M8 x 1.25P**
ST23540000 (J25689-A) Pin punch	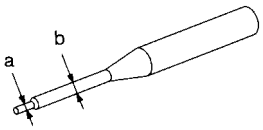 NT442	● Removing and installing parking rod plate and manual plate pins **a: 2.3 mm (0.091 in) dia.** **b: 4 mm (0.16 in) dia.**
ST25710000 (J25689-A) Pin punch	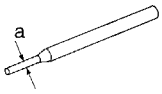 NT410	● Aligning groove of manual shaft and hole of transmission case **a: 2 mm (0.08 in) dia.**

Special Service Tools (Cont'd)

Tool number (Kent-Moore No.) Tool name	Description	
KV32101000 (J25689-A) Pin punch	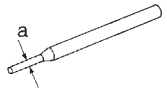 NT410	● Removing and installing manual shaft retaining pin ● Removing and installing pinion mate shaft lock pin **a: 4 mm (0.16 in) dia.**
KV31102400 (J34285 and J34285-87) Clutch spring compres-sor	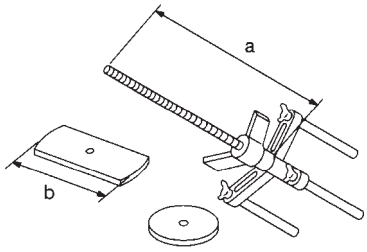 NT423	● Removing and installing clutch return springs ● Installing low and reverse brake piston **a: 320 mm (12.60 in)** **b: 174 mm (6.85 in)**
KV40100630 (J26092) Drift	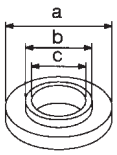 NT107	● Installing reduction gear bearing inner race ● Installing idler gear bearing inner race **a: 67.5 mm (2.657 in) dia.** **b: 44 mm (1.73 in) dia.** **c: 38.5 mm (1.516 in) dia.**
ST30720000 (J25405 and J34331) Bearing installer	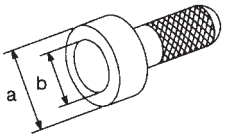 NT115	● Installing idler gear bearing outer race **a: 77 mm (3.03 in) dia.** **b: 55.5 mm (2.185 in) dia.**
ST35321000 (—) Drift	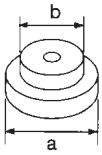 NT073	● Installing output shaft bearing **a: 49 mm (1.93 in) dia.** **b: 41 mm (1.61 in) dia.**
(J34291-A) Shim setting gauge set	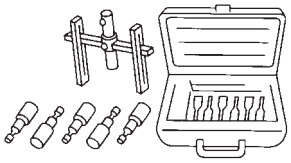 NT101	● Selecting oil pump cover bearing race and oil pump thrust washer ● Selecting side gear thrust washer
ST33230000 (J25805-01) Drift	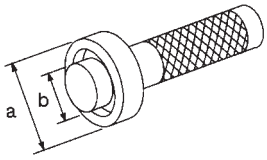 NT084	● Installing differential side bearing inner race **a: 51 mm (2.01 in) dia.** **b: 28.5 mm (1.122 in) dia.**

Tool number (Kent-Moore No.) Tool name	Description	
(J34290) Shim selecting tool set	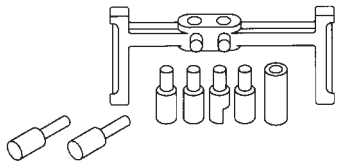 NT080	● Selecting differential side bearing adjusting shim
ST3306S001 (J22888-D) Differential side bearing puller set 1 ST33051001 (J22888-D) Puller 2 ST33061000 (J8107-2) Adapter	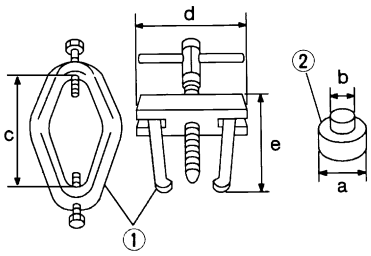 AMT153	● Removing differential side bearing inner race **a: 38 mm (1.50 in) dia.** **b: 28.5 mm (1.122 in) dia.** **c: 130 mm (5.12 in)** **d: 135 mm (5.31 in)** **e: 100 mm (3.94 in)**
ST3127S000 (J25765-A) Preload gauge 1 GG91030000 (J25765-A) Torque wrench 2 HT62940000 (—) Socket adapter 3 HT62900000 (—) Socket adapter	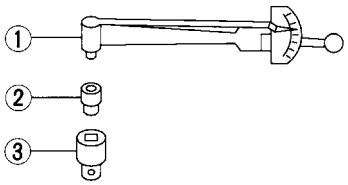 NT124	● Checking differential side bearing preload
ST35271000 (J26091) Drift	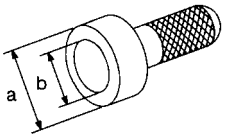 NT115	● Installing idler gear **a: 72 mm (2.83 in) dia.** **b: 63 mm (2.48 in) dia.**
(J39713) Preload adapter	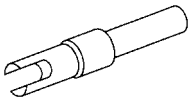 NT087	● Selecting differential side bearing adjusting shim ● Checking differential side bearing preload
ST30613000 (J25742-3) Drift	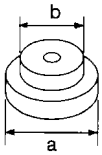 NT073	**a: 72 mm (2.83 in) dia.** **b: 48 mm (1.89 in) dia.**

Commercial Service Tools

NHAT0008

Tool name	Description	
Puller	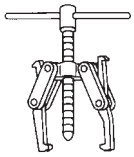 NT077	● Removing idler gear bearing inner race ● Removing and installing band servo piston snap ring
Puller	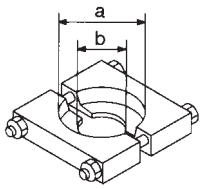 NT411	● Removing reduction gear bearing inner race **a: 60 mm (2.36 in) dia.** **b: 35 mm (1.38 in) dia.**
Drift	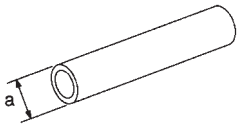 NT083	● Installing needle bearing on bearing retainer **a: 36 mm (1.42 in) dia.**
Drift	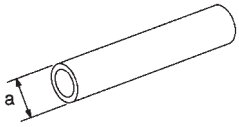 NT083	● Removing needle bearing from bearing retainer **a: 33.5 mm (1.319 in) dia.**
Drift	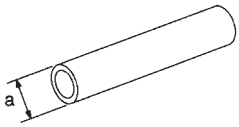 NT083	● Installing differential side bearing outer race **a: 75 mm (2.95 in) dia.**
Power tool	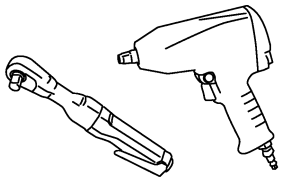 PBIC0190E	● Loosening bolt and nuts

A/T Electrical Parts Location

NHAT0009

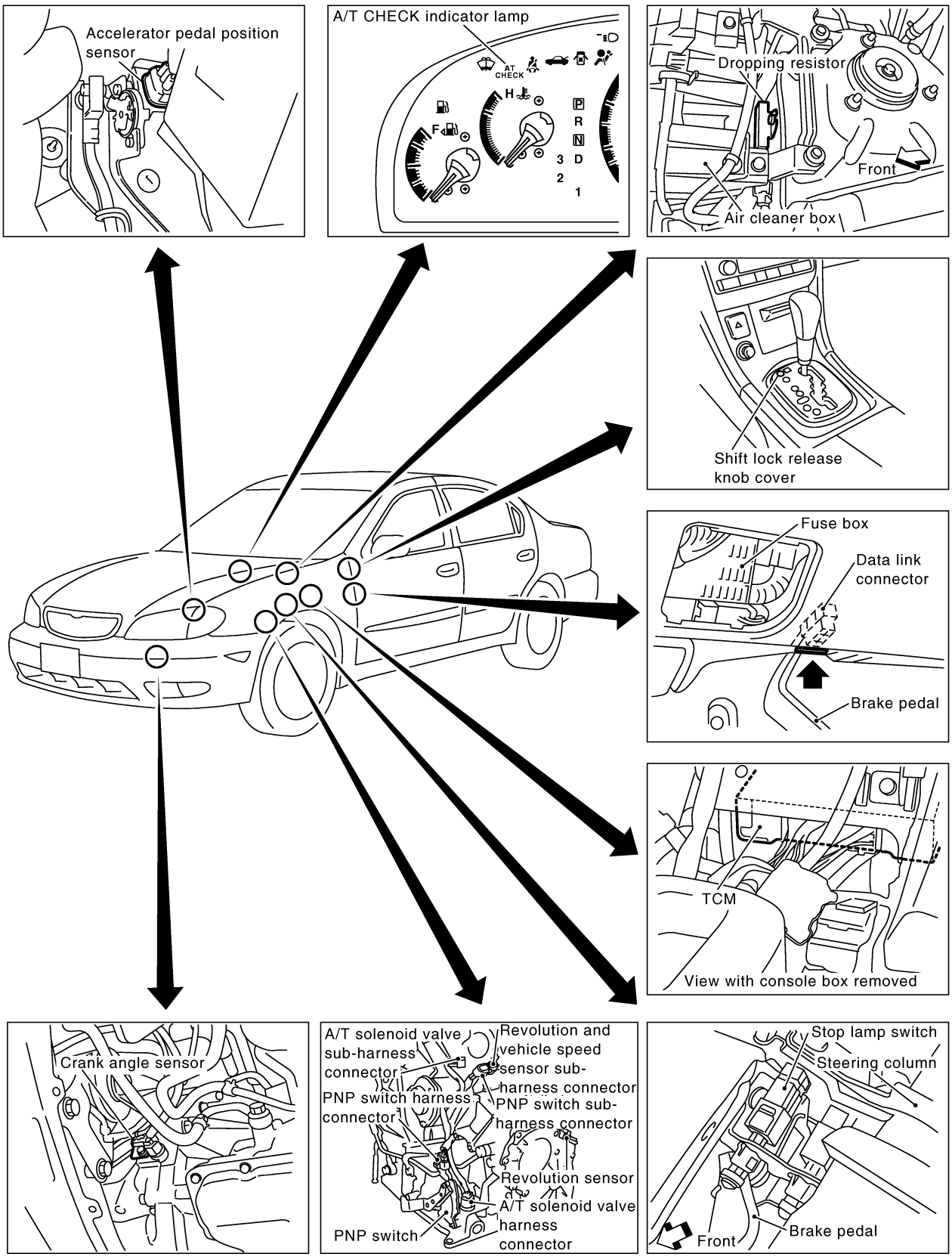

SAT603KA

Circuit Diagram

NHAT0010

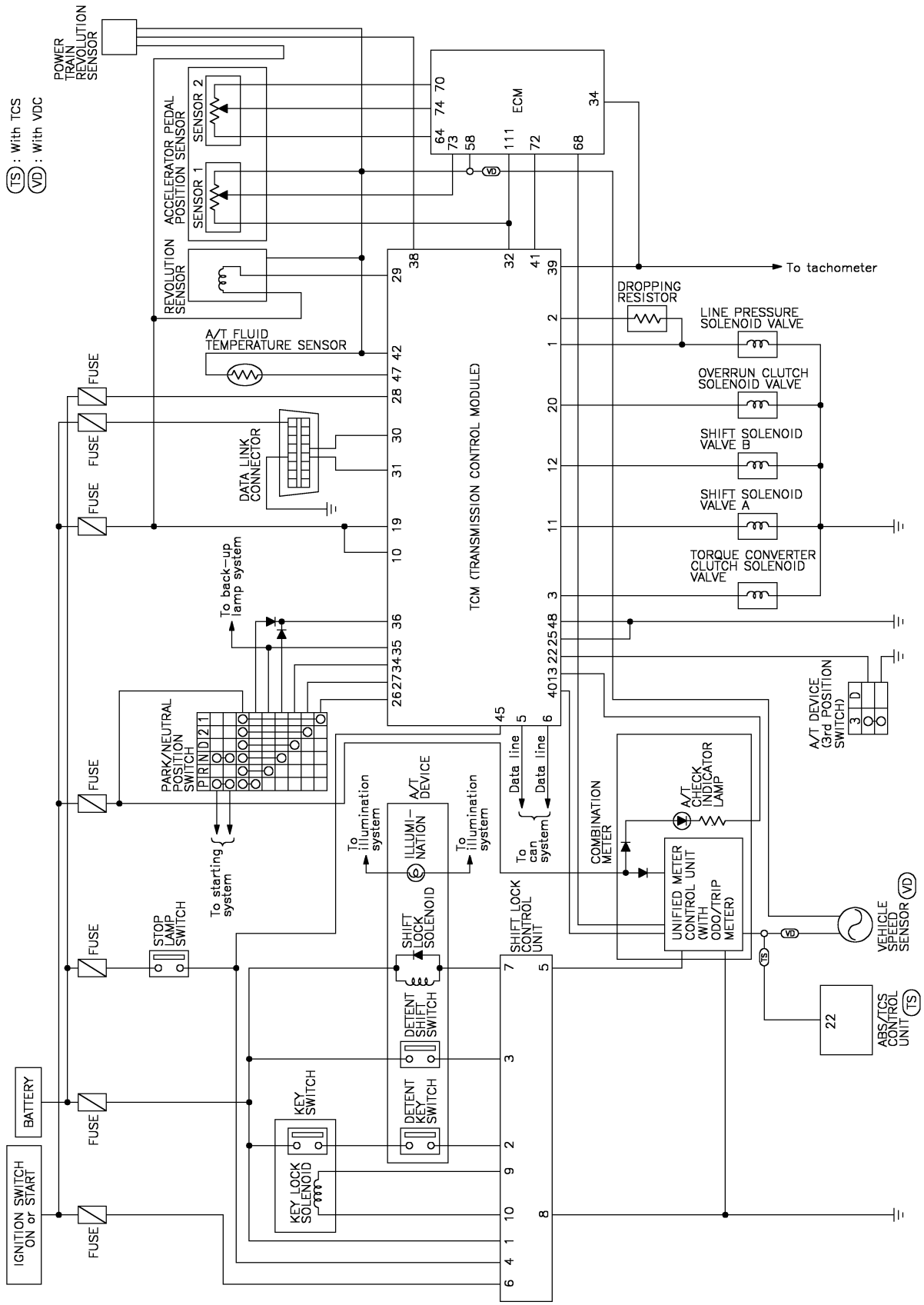

MAT469B

Cross-sectional View

NHAT0011

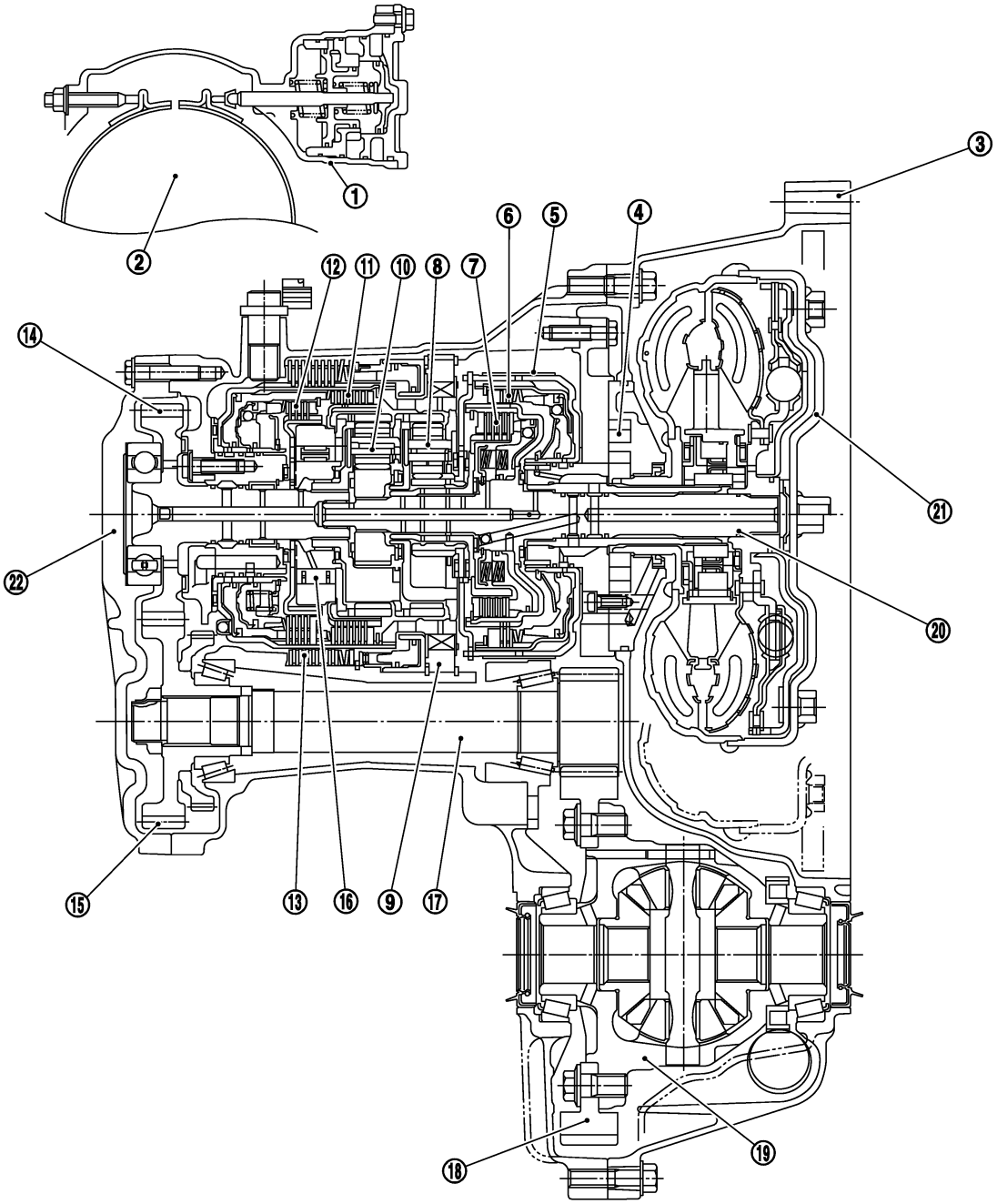

SAT488K

1. Band servo piston
2. Reverse clutch drum
3. Converter housing
4. Oil pump
5. Brake band
6. Reverse clutch
7. High clutch
8. Front planetary gear
9. Low one-way clutch
10. Rear planetary gear
11. Forward clutch
12. Overrun clutch
13. Low & reverse brake
14. Output gear
15. Idler gear
16. Forward one-way clutch
17. Pinion reduction gear
18. Final gear
19. Differential case
20. Input shaft
21. Torque converter
22. Side cover

Hydraulic Control Circuit

NHAT0012

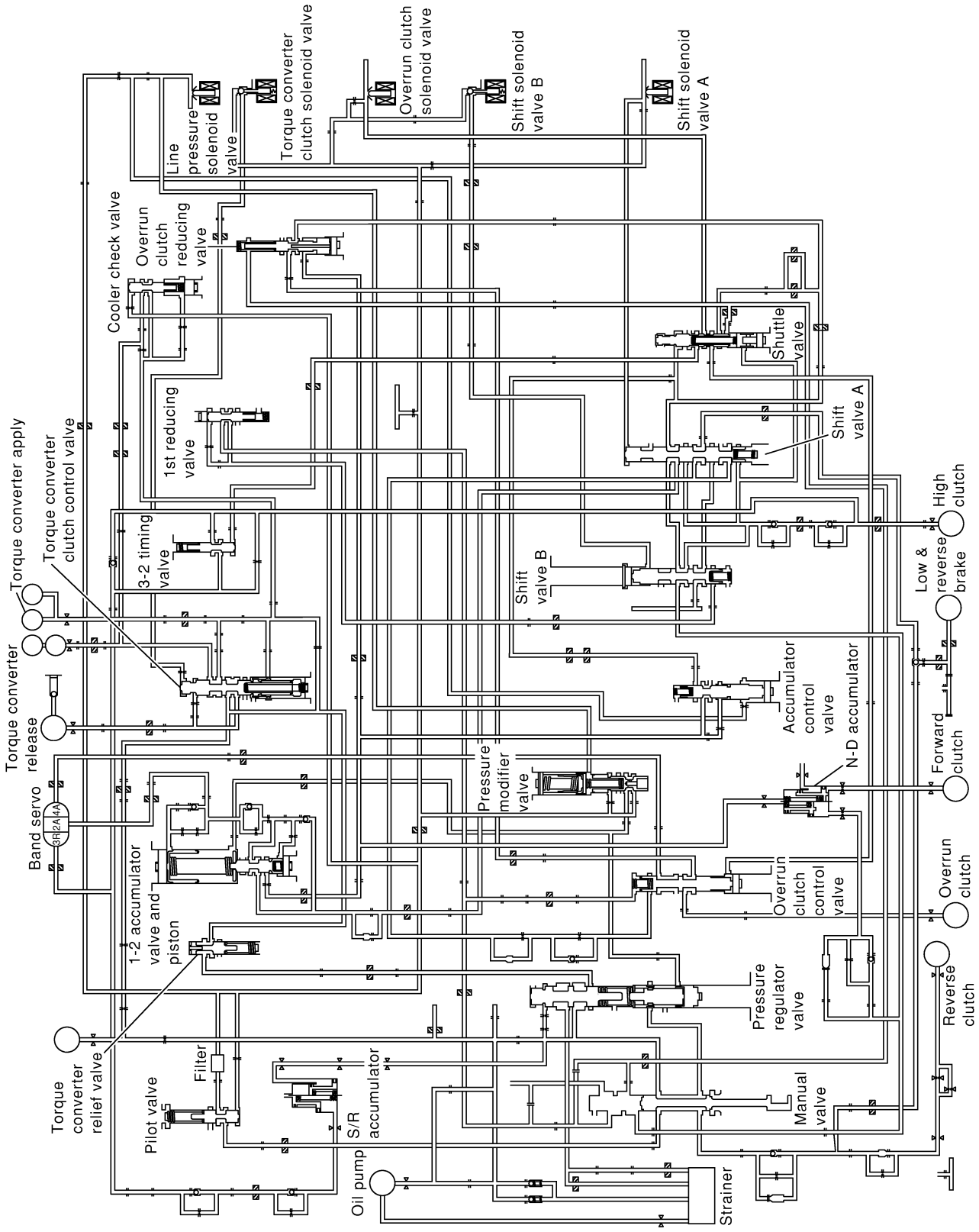

SAT489K

Shift Mechanism

NHAT0013

CONSTRUCTION

NHAT0013S01

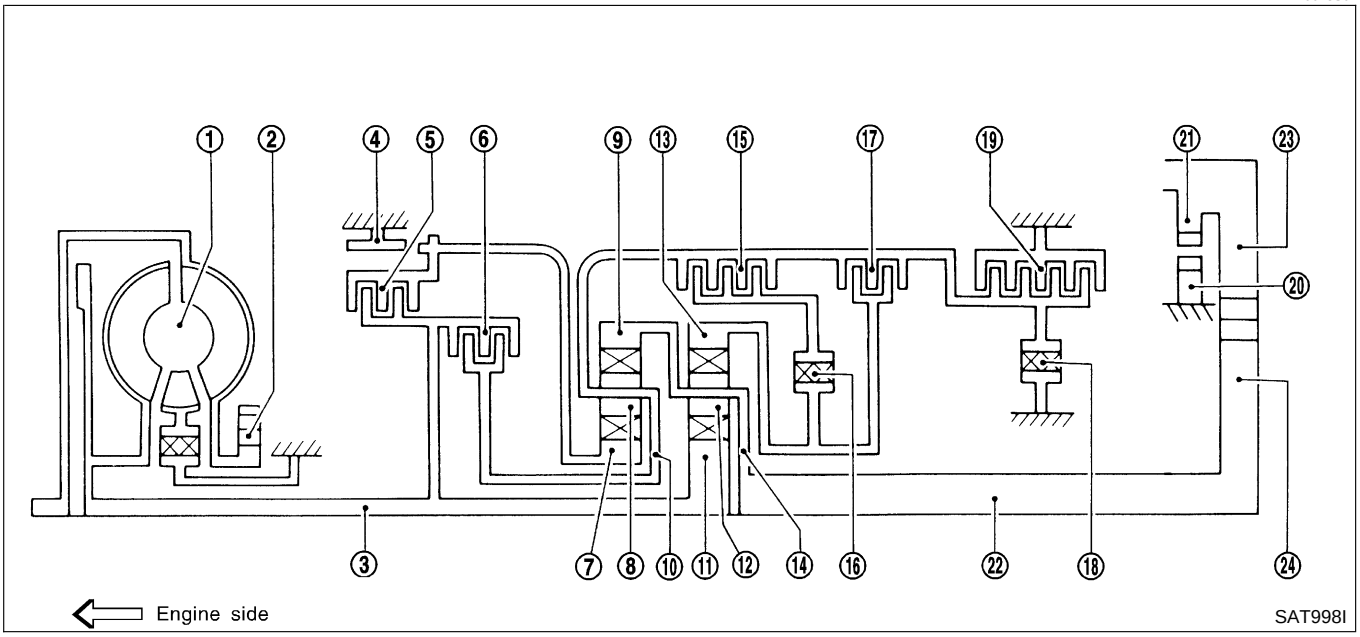

1. Torque converter
2. Oil pump
3. Input shaft
4. Brake band
5. Reverse clutch
6. High clutch
7. Front sun gear
8. Front pinion gear
9. Front internal gear
10. Front planetary carrier
11. Rear sun gear
12. Rear pinion gear
13. Rear internal gear
14. Rear planetary carrier
15. Forward clutch
16. Forward one-way clutch
17. Overrun clutch
18. Low one-way clutch
19. Low & reverse brake
20. Parking pawl
21. Parking gear
22. Output shaft
23. Idle gear
24. Output gear

FUNCTION OF CLUTCH AND BRAKE

NHAT0013S02

Clutch and brake components	Abbr.	Function
Reverse clutch **5**	R/C	To transmit input power to front sun gear **7**.
High clutch **6**	H/C	To transmit input power to front planetary carrier **10**.
Forward clutch **15**	F/C	To connect front planetary carrier **10** with forward one-way clutch **16**.
Overrun clutch **17**	O/C	To connect front planetary carrier **10** with rear internal gear **13**.
Brake band **4**	B/B	To lock front sun gear **7**.
Forward one-way clutch **16**	F/O.C	When forward clutch **15** is engaged, to stop rear internal gear **13** from rotating in opposite direction against engine revolution.
Low one-way clutch **18**	L/O.C	To stop front planetary carrier **10** from rotating in opposite direction against engine revolution.
Low & reverse brake **19**	L & R/B	To lock front planetary carrier **10**.

CLUTCH AND BAND CHART

NHAT0013S03

Shift position		Reverse clutch **5**	High clutch **6**	For-ward clutch **15**	Over-run clutch **17**	Band servo			For-ward one-way clutch **16**	Low one-way clutch **18**	Low & reverse brake **19**	Lock-up	Remarks
						2nd apply	3rd release	4th apply					
P													PARK POSI-TION
R		◯									◯		REVERSE POSITION
N													NEUTRAL POSITION
D*4	1st			◯	*1D				B	B			Automatic shift 1 ⇔ 2 ⇔ 3 ⇔ 4
	2nd			◯	*1 A	◯			B				
	3rd		◯	◯	*1 A	*2C	C		B			*1◯	
	4th		◯	C		*3C	C	◯				◯	
2	1st			◯	◯				B	B			Automatic shift 1 ⇔ 2 ⇐ 3
	2nd			◯	◯	◯			B				
	3rd		◯	◯	◯	*2C	C		B				
1	1st			◯	◯				B		◯		Locks (held stationary) in 1st speed 1 ⇐ 2 ⇐ 3
	2nd			◯	◯	◯			B				
	3rd		◯	◯	◯	*2C	C		B				

*1: Operates when selector lever is set in 3rd position.

*2: Oil pressure is applied to both 2nd "apply" side and 3rd "release" side of band servo piston. However, brake band does not contract because oil pressure area on the "release" side is greater than that on the "apply" side.

*3: Oil pressure is applied to 4th "apply" side in condition *2 above, and brake band contracts.

*4: A/T will not shift to 4th when selector lever is set in 3rd position.

◯: Operates

A: Operates when throttle opening is less than 3.0/16, activating engine brake.

B: Operates during "progressive" acceleration.

C: Operates but does not affect power transmission.

D: Operates when throttle opening is less than 3.0/16, but does not affect engine brake.

POWER TRANSMISSION

=NHAT0013S04

P and N Positions

NHAT0013S0401

- P position
  Similar to the N position, the clutches do not operate. The parking pawl engages with the parking gear to mechanically hold the output shaft so that the power train is locked.
- N position
  Power from the input shaft is not transmitted to the output shaft because the clutches do not operate.

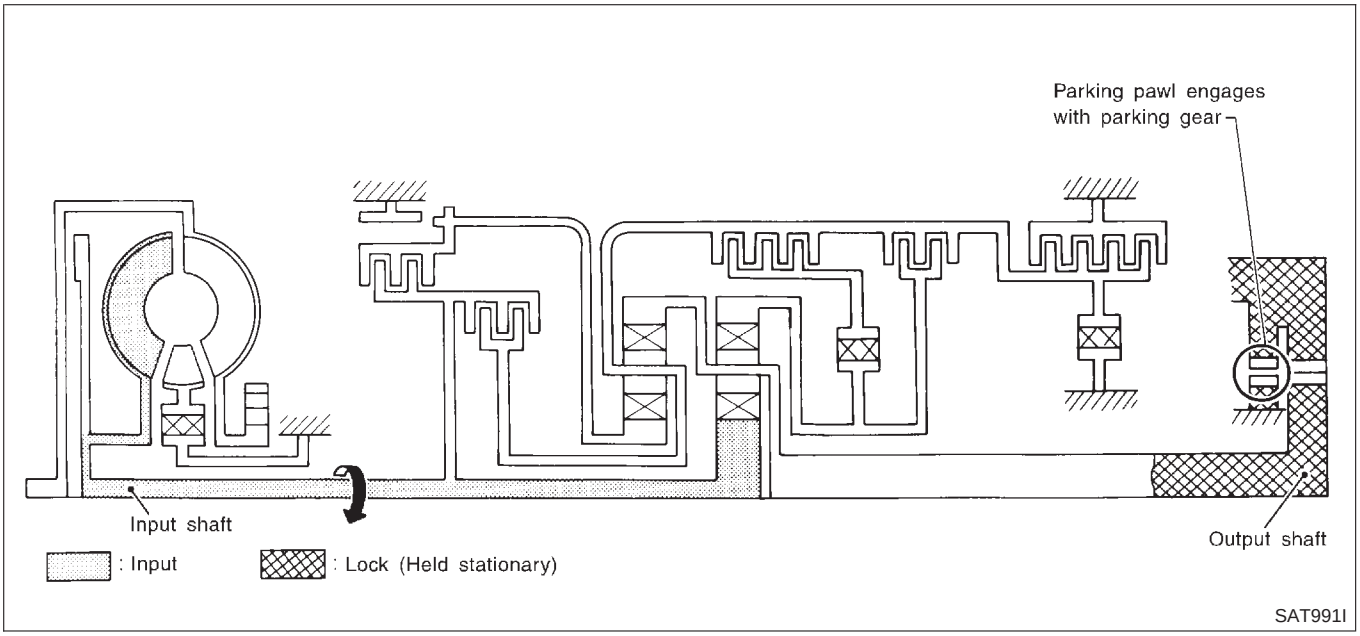

1_1 Position

=NHAT0013S0402

• **Forward clutch** • **Forward one-way clutch** • **Overrun clutch** • **Low and reverse brake**	As overrun clutch engages, rear internal gear is locked by the operation of low and reverse brake. This is different from that of D_1 and 2_1.
Engine brake	Overrun clutch always engages, therefore engine brake can be obtained when decelerating.

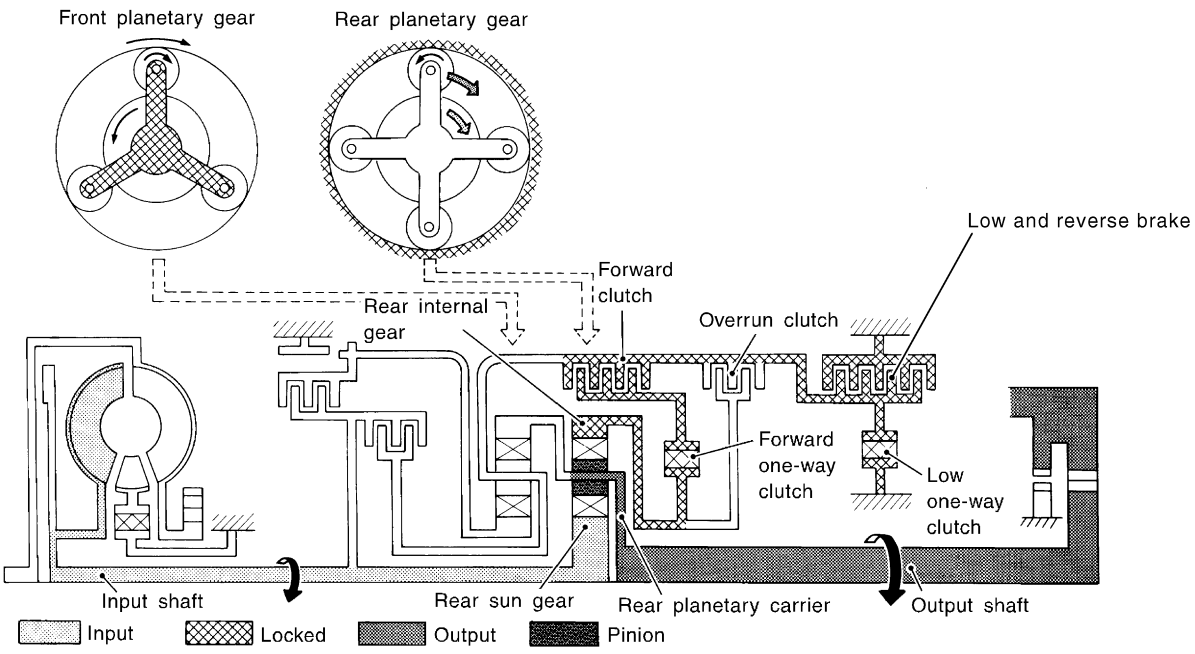

Power flow

Input shaft
⇩
Rear sun gear
⇩
Rear planetary carrier ⇨ Output shaft

SAT714KB

D_1 and 2_1 Positions

=NHAT0013S0403

• **Forward one-way clutch** • **Forward clutch** • **Low one-way clutch**	Rear internal gear is locked to rotate counterclockwise because of the functioning of these three clutches.
Overrun clutch engagement conditions (Engine brake)	D_1: Selector lever is set in 3rd position and throttle opening is less than 3.0/16 2_1: Always engaged At D_1 and 2_1 positions, engine brake is not activated due to free turning of low one-way clutch.

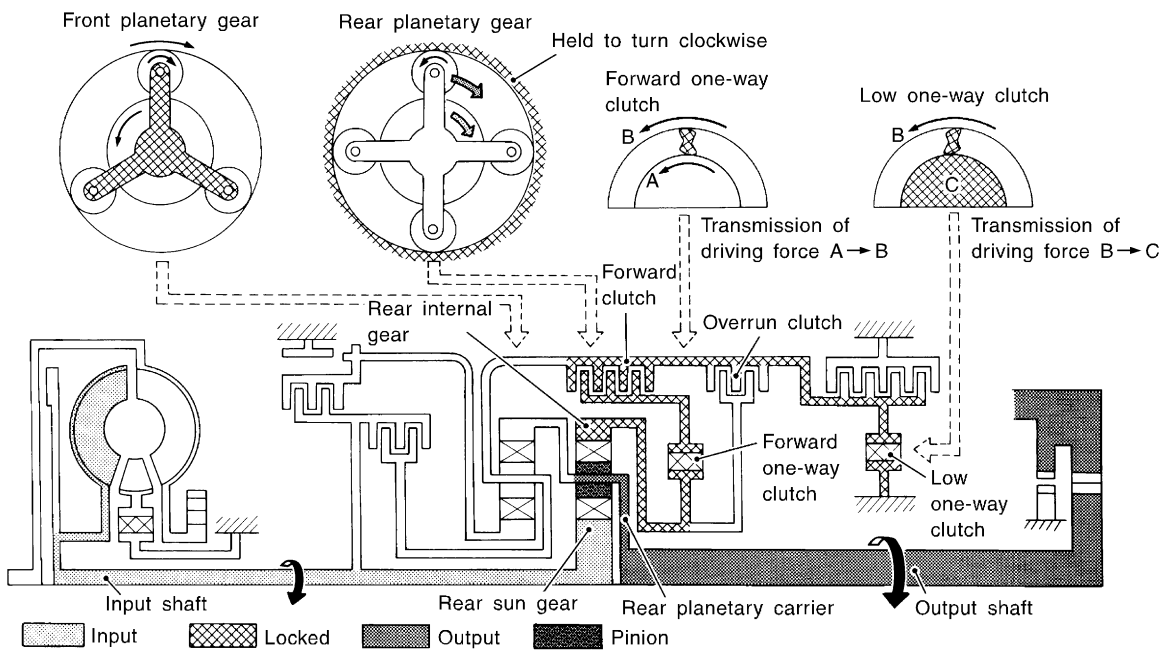

Power flow

Input shaft
⇩
Rear sun gear
⇩
Rear pinion gear
⇩
Rear planetary carrier → Output shaft

AAT532A

D_2, 2_2 and 1_2 Positions

=NHAT0013S0404

• **Forward clutch** • **Forward one-way clutch** • **Brake band**	Rear sun gear drives rear planetary carrier and combined front internal gear. Front internal gear now rotates around front sun gear accompanying front planetary carrier. As front planetary carrier transfers the power to rear internal gear through forward clutch and forward one-way clutch, this rotation of rear internal gear increases the speed of rear planetary carrier compared with that of the 1st speed.
Overrun clutch engagement conditions	D_2: Selector lever is set in 3rd position and throttle opening is less than 3.0/16 2_2, and 1_2: Always engaged

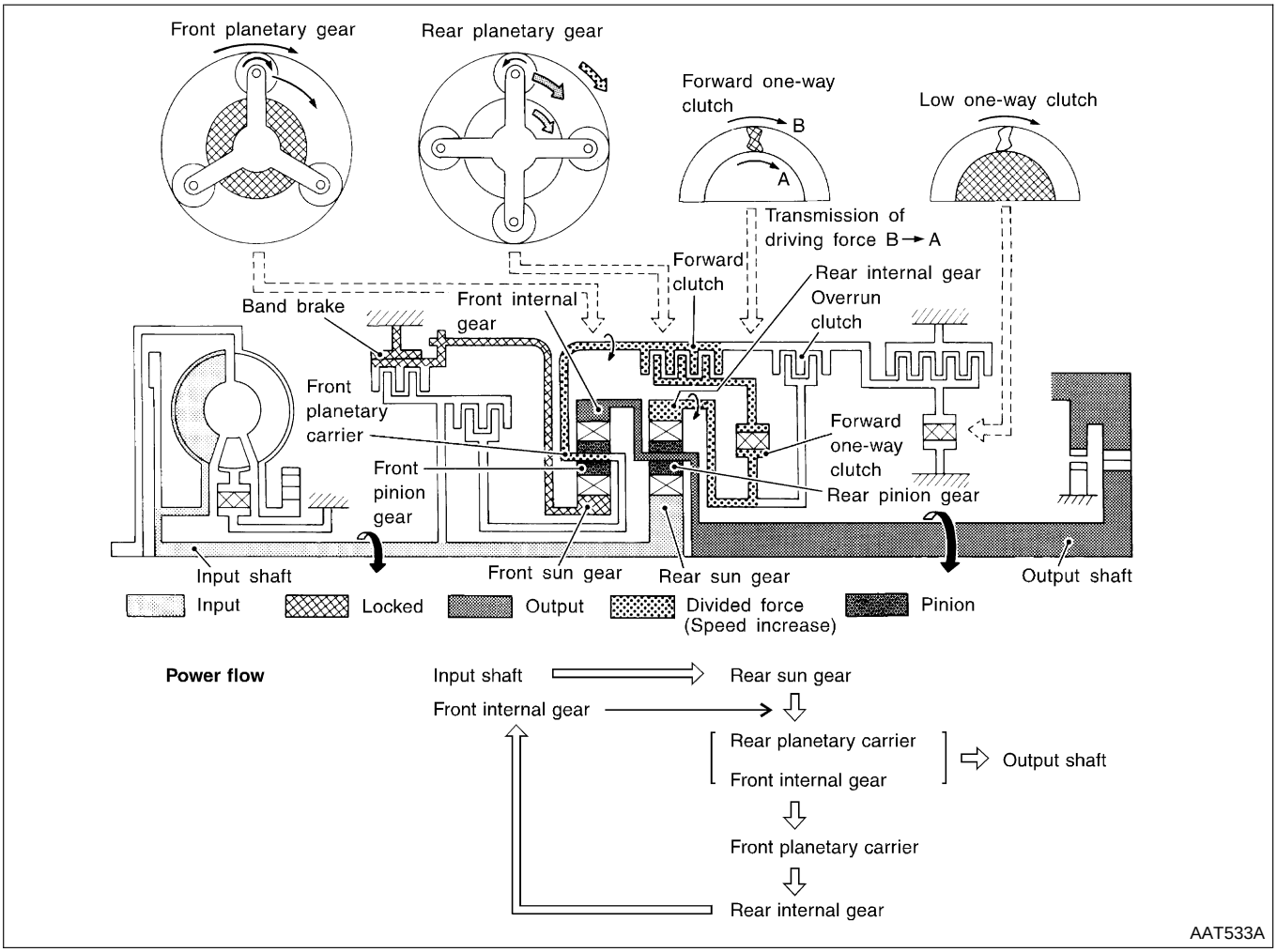

D_3, 2_3 and 1_3 Position

=NHAT0013S0405

• **High clutch** • **Forward clutch** • **Forward one-way clutch**	Input power is transmitted to front planetary carrier through high clutch. And front planetary carrier is connected to rear internal gear by operation of forward clutch and forward one-way clutch. This rear internal gear rotation and another input (the rear sun gear) accompany rear planetary carrier to turn at the same speed.
Overrun clutch engagement conditions	D_3: Selector lever is set in 3rd position and throttle opening is less than 3.0/16 2_3 and 1_3: Always engaged.

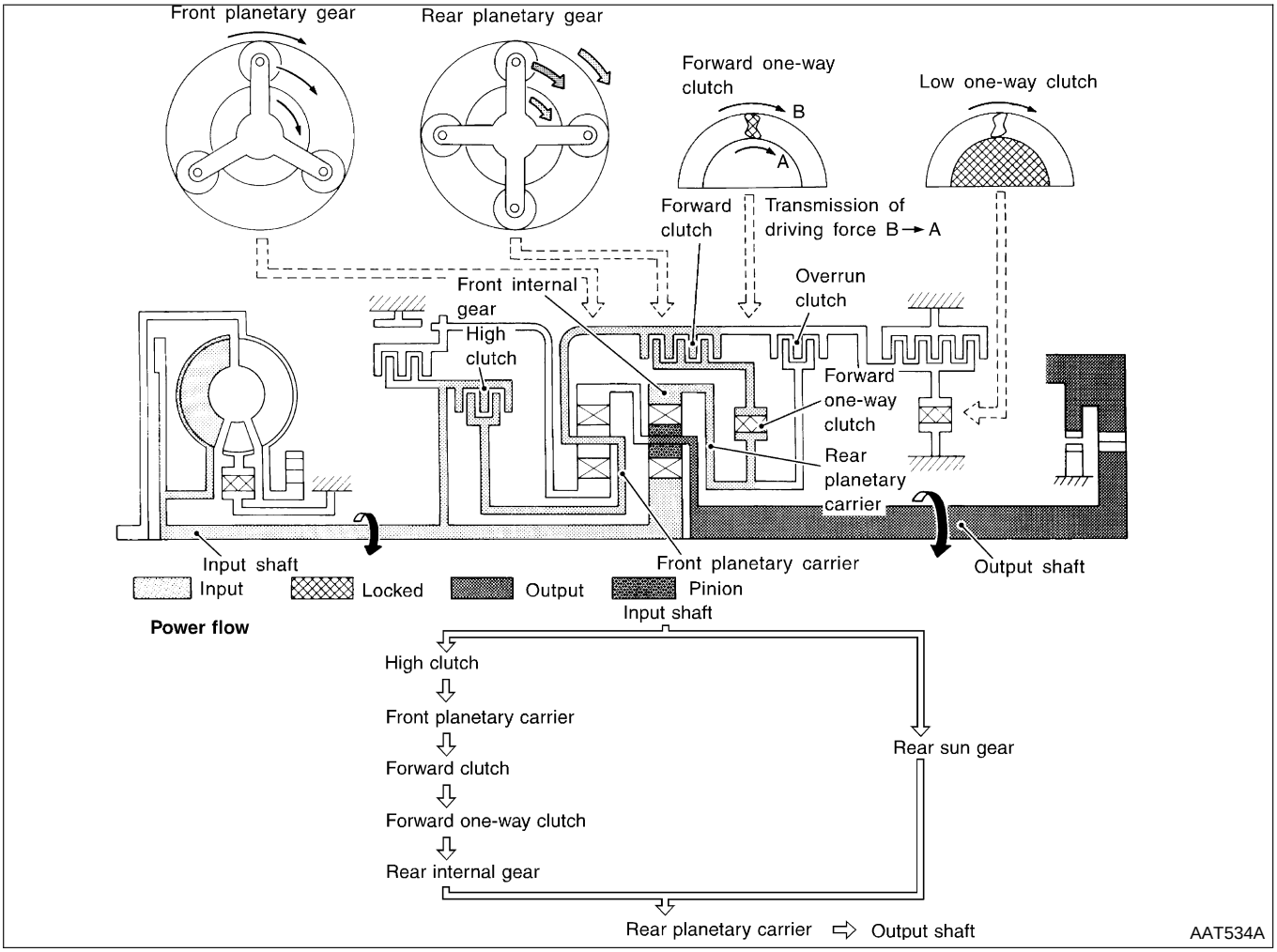

D_4 Position

=NHAT0013S0406

• **High clutch** • **Brake band** • **Forward clutch** (Does not affect power transmission.)	Input power is transmitted to front carrier through high clutch. This front carrier turns around the sun gear which is fixed by brake band and makes front internal gear (output) turn faster.
Engine brake	At D_4 position, there is no one-way clutch in the power transmission line and engine brake can be obtained when decelerating.

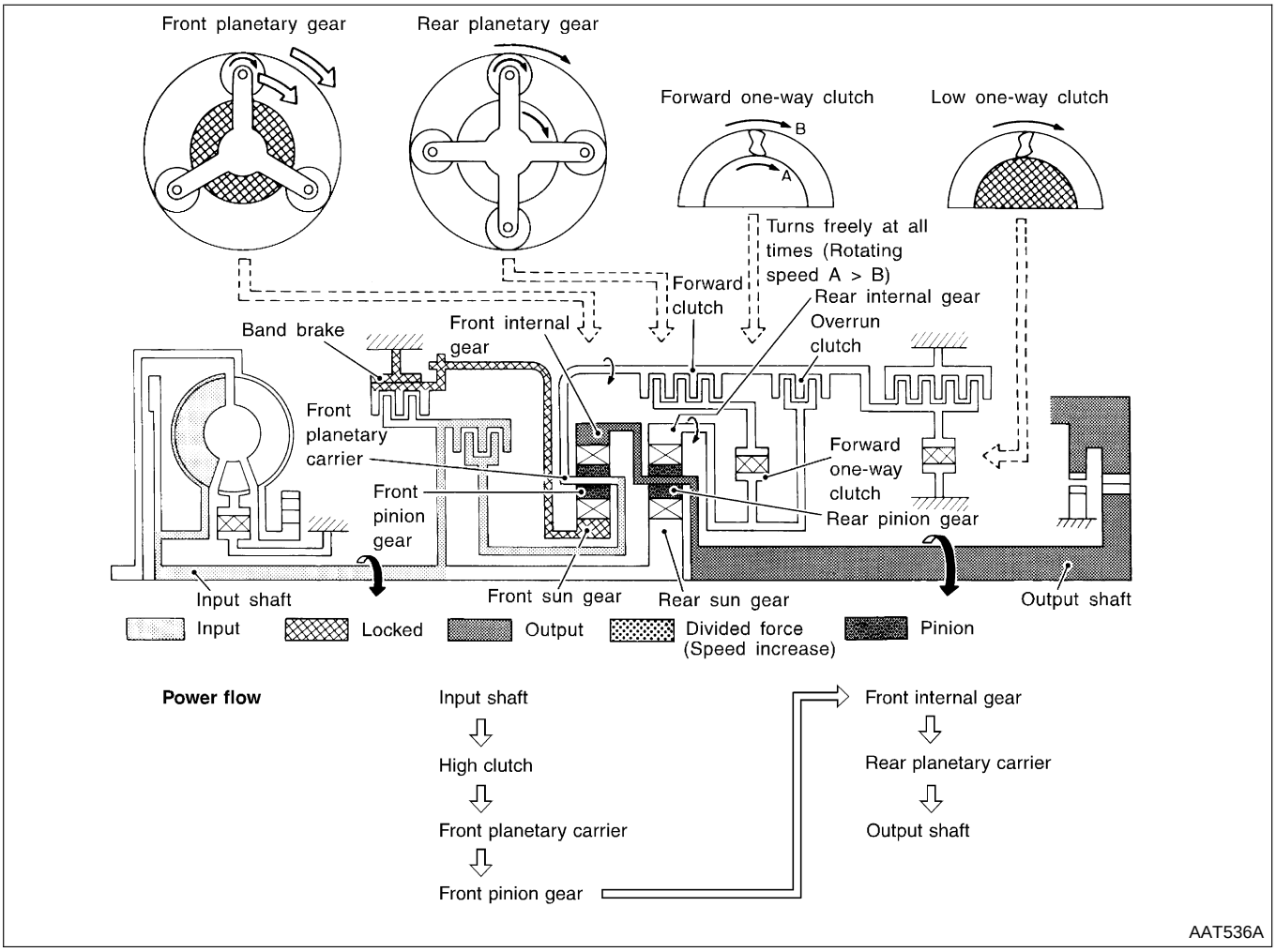

R Position

=NHAT0013S0407

• **Reverse clutch** • **Low and reverse brake**	Front planetary carrier is stationary because of the operation of low and reverse brake. Input power is transmitted to front sun gear through reverse clutch, which drives front internal gear in the opposite direction.
Engine brake	As there is no one-way clutch in the power transmission line, engine brake can be obtained when decelerating.

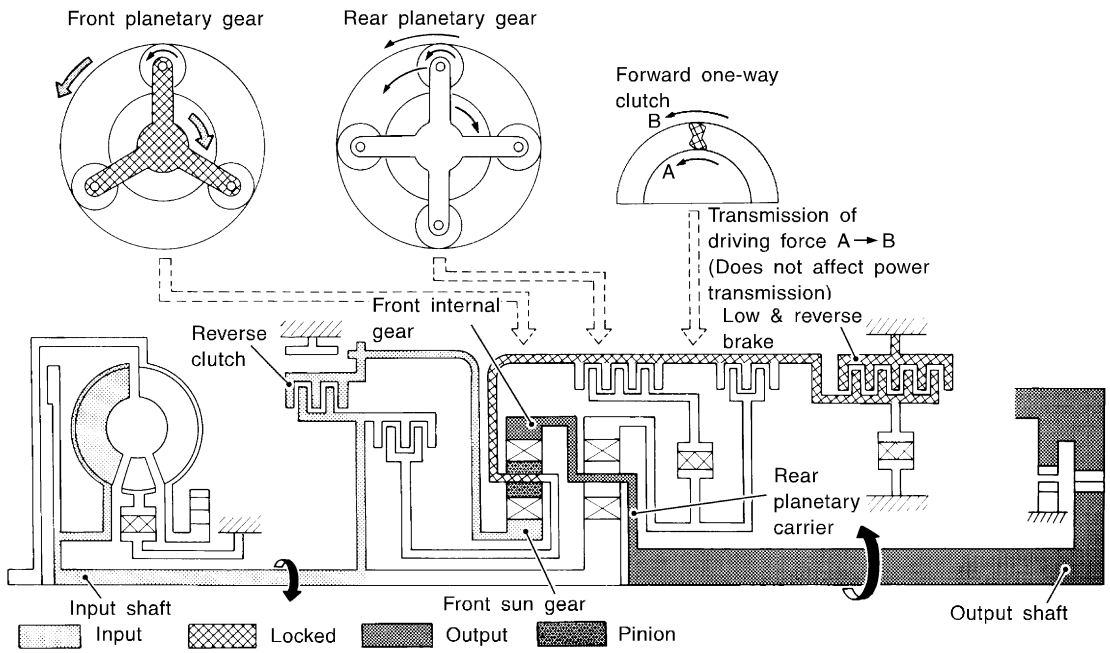

Power flow

Input shaft
⇩
Reverse clutch
⇩
Front pinion gear ⇦ Front sun gear
⇩
Front internal gear ⇨ Output shaft

AAT535A

Control System

=NHAT0014

OUTLINE

NHAT0014S01

The automatic transaxle senses vehicle operating conditions through various sensors. It always controls the optimum shift position and reduces shifting and lock-up shocks.

SENSORS (OR SIGNALS)		TCM		ACTUATORS
Park/neutral position (PNP) switch Accelerator pedal position sensor Closed throttle position signal Wide open throttle position signal Engine speed signal A/T fluid temperature sensor Revolution sensor (VHCL/S SE-1) Vehicle speed sensor (VHCL/S SE-2) 3rd position switch ASCD control unit Stop lamp switch Power train revolution sensor	▶	Shift control Line pressure control Lock-up control Overrun clutch control Timing control Fail-safe control Self-diagnosis CAN communication line control	▶	Shift solenoid valve A Shift solenoid valve B Overrun clutch solenoid valve Torque converter clutch solenoid valve Line pressure solenoid valve A/T CHECK indicator lamp

CONTROL SYSTEM

NHAT0014S02

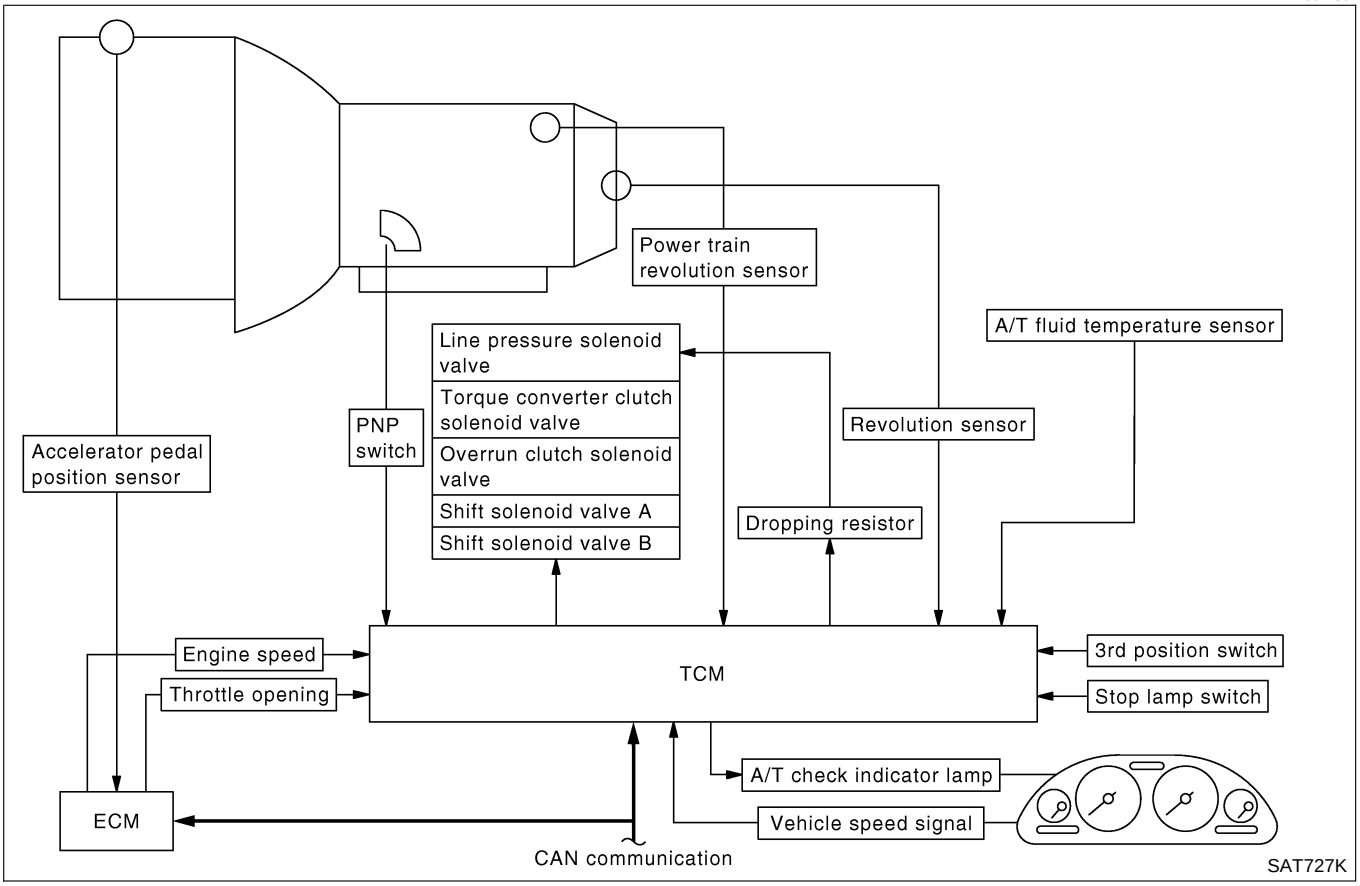

TCM FUNCTION

=NHAT0014S03

The function of the TCM is to:

- Receive input signals sent from various switches and sensors.
- Determine required line pressure, shifting point, lock-up operation, and engine brake operation.
- Send required output signals to the respective solenoids.

INPUT/OUTPUT SIGNAL OF TCM

NHAT0014S04

	Sensors and solenoid valves	Function
Input	Park/neutral position (PNP) switch	Detects select lever position and sends a signal to TCM.
	Accelerator pedal position sensor	Detects accelerator pedal position as throttle valve position signal, and sends a signal from ECM to TCM.
	Closed throttle position signal	Detects throttle valve's fully-closed position and sends a signal from ECM to TCM.
	Wide open throttle position switch	Detects a throttle valve position of greater than 1/2 or full throttle and sends a signal from ECM to TCM.
	Engine speed signal	From ECM.
	A/T fluid temperature sensor	Detects transmission fluid temperature and sends a signal to TCM.
	Revolution sensor (VHCL/S SE-1)	Detects output shaft rpm and sends a signal to TCM.
	Vehicle speed sensor (VHCL/S SE-2)	Used as an auxiliary vehicle speed sensor. Sends a signal when revolution sensor (installed on transmission) malfunctions.
	3rd position switch	Sends a signal, which prohibits a shift to D position, to the TCM.
	Power train revolution sensor	Detects forward clutch drum rpm and sends a signal to TCM.
	Stop lamp switch	Send the lock-up release signal to the TCM at time of D_4 (lock-up).
Output	Shift solenoid valve A/B	Selects shifting point suited to driving conditions in relation to a signal sent from TCM.
	Line pressure solenoid valve	Regulates (or decreases) line pressure suited to driving conditions in relation to a signal sent from TCM.
	Torque converter clutch solenoid valve	Regulates (or decreases) lock-up pressure suited to driving conditions in relation to a signal sent from TCM.
	Overrun clutch solenoid valve	Controls an "engine brake" effect suited to driving conditions in relation to a signal sent from TCM.
	A/T CHECK indicator lamp	Shows TCM faults, when A/T control components malfunction.

CAN Communication

NHAT0285

SYSTEM DESCRIPTION

NHAT0285S01

CAN (Controller Area Network) is a serial communication line for real time application. It is an on-vehicle multiplex communication line with high data communication speed and excellent error detection ability. Many electronic control units are equipped onto a vehicle, and each control unit shares information and links with other control units during operation (not independent). In CAN communication, control units are connected with 2 communication lines (CAN H line, CAN L line) allowing a high rate of information transmission with less wiring. Each control unit transmits/receives data but selectively reads required data only. Refer to EL-448.

Control Mechanism

=NHAT0015

LINE PRESSURE CONTROL

NHAT0015S01

TCM has various line pressure control characteristics to meet the driving conditions.
An ON-OFF duty signal is sent to the line pressure solenoid valve based on TCM characteristics.
Hydraulic pressure on the clutch and brake is electronically controlled through the line pressure solenoid valve to accommodate engine torque. This results in smooth shift operation.

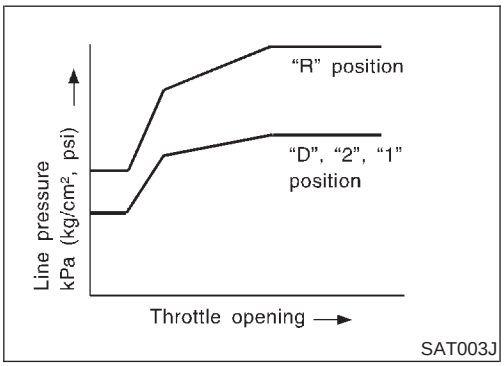

Normal Control

NHAT0015S0101

The line pressure to throttle opening characteristics is set for suitable clutch operation.

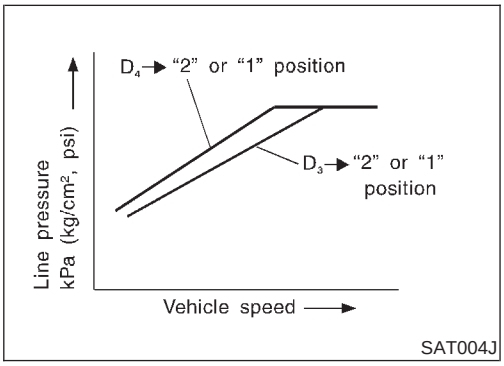

Back-up Control (Engine brake)

NHAT0015S0102

If the selector lever is shifted to 2nd position while driving in D_4 (O/D) or D_3, great driving force is applied to the clutch inside the transmission. Clutch operating pressure (line pressure) must be increased to deal with this driving force.

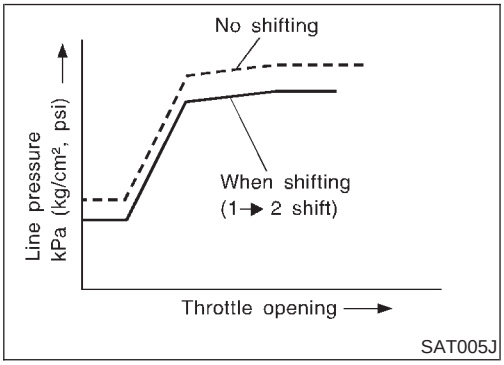

During Shift Change

NHAT0015S0103

The line pressure is temporarily reduced corresponding to a change in engine torque when shifting gears (that is, when the shift solenoid valve is switched for clutch operation) to reduce shifting shock.

At Low Fluid Temperature

NHAT0015S0104

- Fluid viscosity and frictional characteristics of the clutch facing change with fluid temperature. Clutch engaging or band-contacting pressure is compensated for, according to fluid temperature, to stabilize shifting quality.

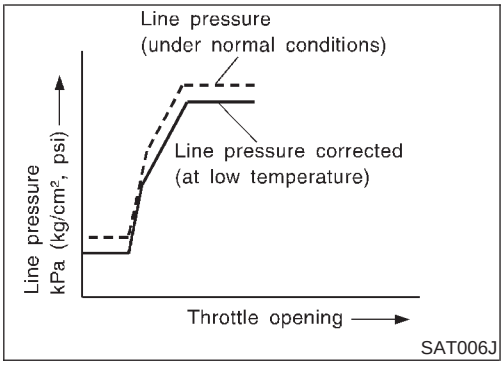

- The line pressure is reduced below 60°C (140°F) to prevent shifting shock due to low viscosity of automatic transmission fluid when temperature is low.

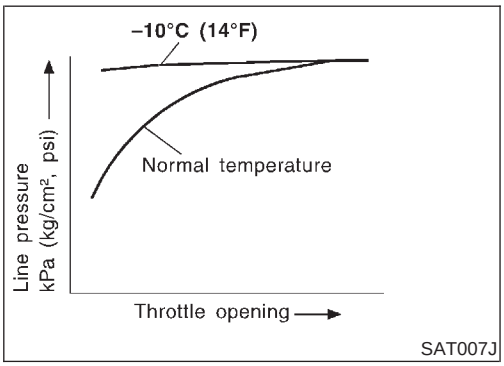

- Line pressure is increased to a maximum irrespective of the throttle opening when fluid temperature drops to −10°C (14°F). This pressure rise is adopted to prevent a delay in clutch and brake operation due to extreme drop of fluid viscosity at low temperature.

SHIFT CONTROL

NHAT0015S02

The shift is regulated entirely by electronic control to accommodate vehicle speed and varying engine operations. This is accomplished by electrical signals transmitted by the revolution sensor and throttle position sensor. This results in improved acceleration performance and fuel economy.

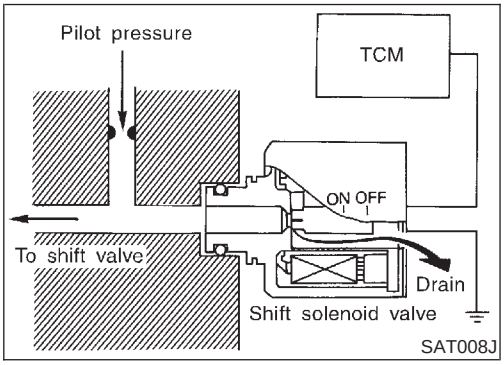

Control of Shift Solenoid Valves A and B

NHAT0015S0201

The TCM activates shift solenoid valves A and B according to signals from the accelerator pedal position sensor (throttle position sensor) and revolution sensor to select the optimum gear position on the basis of the shift schedule memorized in the TCM.
The shift solenoid valve performs simple ON-OFF operation. When set to ON, the drain circuit closes and pilot pressure is applied to the shift valve.

Relation between shift solenoid valves A and B and gear positions

Shift solenoid valve	Gear position				
	D_1, 2_1, 1_1	D_2, 2_2, 1_2	D_3	D_4 (O/D)	N-P
A	ON (Closed)	OFF (Open)	OFF (Open)	ON (Closed)	ON (Closed)
B	ON (Closed)	ON (Closed)	OFF (Open)	OFF (Open)	ON (Closed)

Control of Shift Valves A and B

NHAT0015S0202

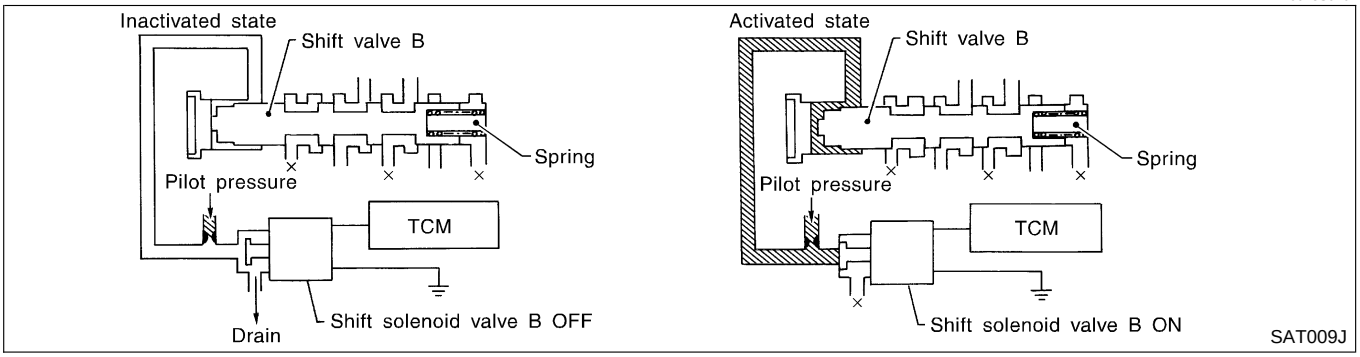

Pilot pressure generated by the operation of shift solenoid valves A and B is applied to the end face of shift valves A and B.
The drawing above shows the operation of shift valve B. When the shift solenoid valve is ON, pilot pressure applied to the end face of the shift valve overcomes spring force, moving the valve upward.

LOCK-UP CONTROL

NHAT0015S03

The torque converter clutch piston in the torque converter is locked to eliminate torque converter slip to increase power transmission efficiency. The solenoid valve is controlled by an ON-OFF duty signal sent from the TCM. The signal is converted to an oil pressure signal which controls the lock-up piston.

Conditions for Lock-up Operation

NHAT0015S0301

When vehicle is driven in 3rd or 4th gear positions, vehicle speed and throttle opening are detected. If the detected values fall within the lock-up zone memorized in the TCM, lock-up is performed.

Selector lever	D position	3rd position
Gear position	D_4	D_3
Vehicle speed sensor	More than set value	
Accelerator pedal position sensor (Throttle position sensor)	Less than set opening	
Closed throttle position switch	OFF	
A/T fluid temperature sensor	More than 40°C (104°F)	

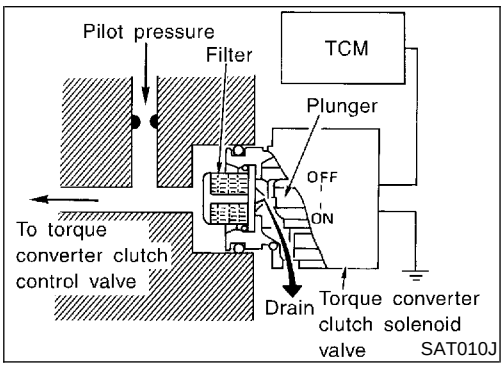

Torque Converter Clutch Solenoid Valve Control

NHAT0015S0302

The torque converter clutch solenoid valve is controlled by the TCM. The plunger closes the drain circuit during the OFF period, and opens the circuit during the ON period. If the percentage of OFF-time increases in one cycle, the pilot pressure drain time is reduced and pilot pressure remains high.
The torque converter clutch piston is designed to slip to adjust the ratio of ON-OFF, thereby reducing lock-up shock.

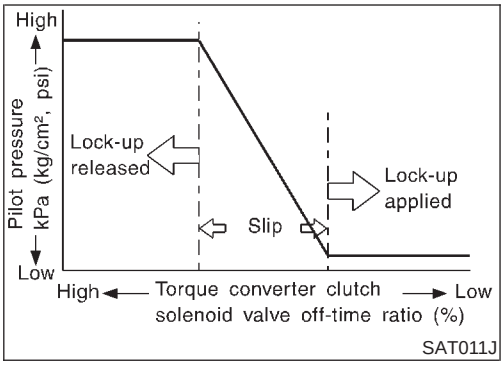

OFF-time INCREASING
↓
Amount of drain DECREASING
↓
Pilot pressure HIGH
↓
Lock-up RELEASING

Torque Converter Clutch Control Valve Operation

NHAT0015S0303

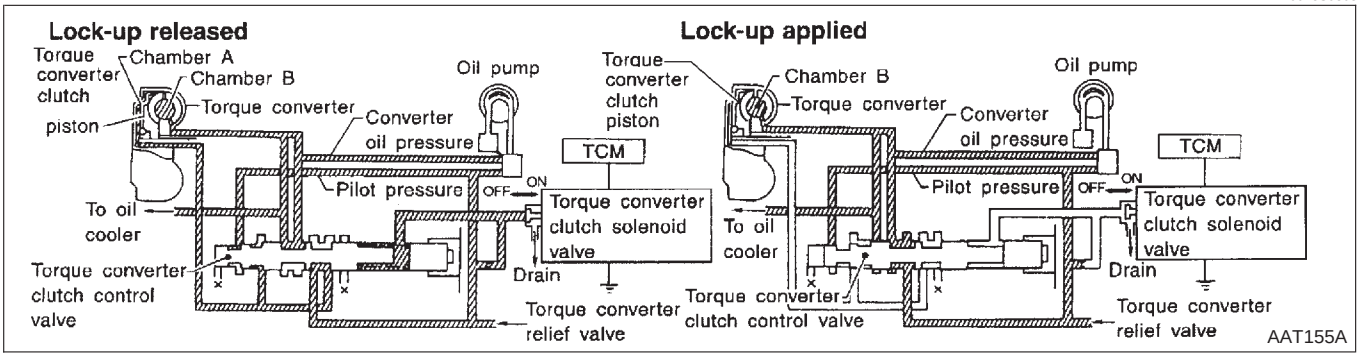

Lock-up released
The OFF-duration of the torque converter clutch solenoid valve is long, and pilot pressure is high. The pilot pressure pushes the end face of the torque converter clutch control valve in combination with spring force to move the valve to the left. As a result, converter pressure is applied to chamber A (torque converter clutch piston release side). Accordingly, the torque converter clutch piston remains unlocked.

Lock-up applied
When the OFF-duration of the torque converter clutch solenoid valve is short, pilot pressure drains and becomes low. Accordingly, the control valve moves to the right by the pilot pressure of the other circuit and converter pressure. As a result, converter pressure is applied to chamber B, keeping the torque converter clutch piston applied.
Also smooth lock-up is provided by transient application and release of the lock-up.

OVERRUN CLUTCH CONTROL (ENGINE BRAKE CONTROL)

NHAT0015S04

Forward one-way clutch is used to reduce shifting shocks in down-shifting operations. This clutch transmits engine torque to the wheels. However, drive force from the wheels is not transmitted to the engine because the one-way clutch rotates idle. This means the engine brake is not effective.
The overrun clutch operates when the engine brake is needed.

Overrun Clutch Operating Conditions

NHAT0015S0401

Selector lever position	Gear position	Throttle opening
D position	D_1, D_2, D_3 gear position	Less than 3.0/16
2nd position	2_1, 2_2 gear position	At any position
1st position	1_1, 1_2 gear position	

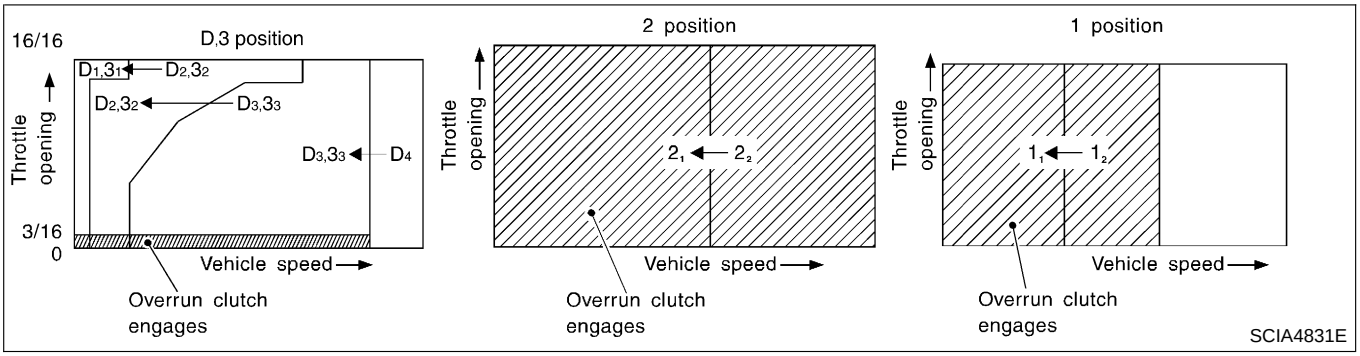

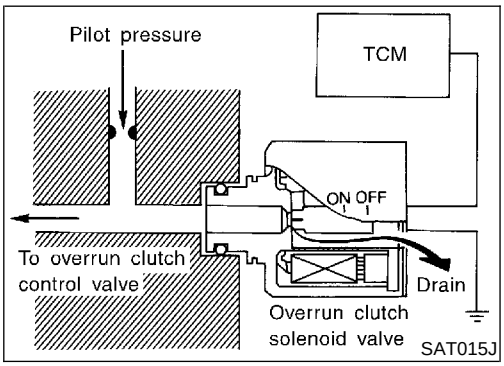

Overrun Clutch Solenoid Valve Control

NHAT0015S0402

The overrun clutch solenoid valve is operated by an ON-OFF signal transmitted by the TCM to provide overrun clutch control (engine brake control).

When this solenoid valve is ON, the pilot pressure drain port closes. When it is OFF, the drain port opens.

During the solenoid valve ON pilot pressure is applied to the end face of the overrun clutch control valve.

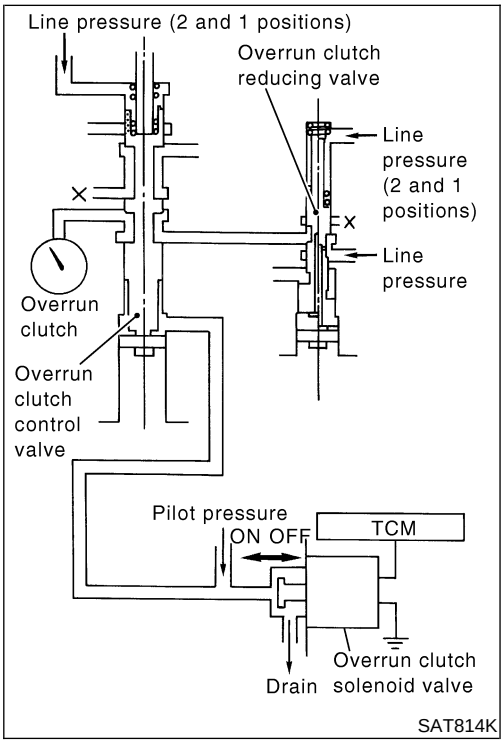

Overrun Clutch Control Valve Operation

NHAT0015S0403

When the solenoid valve is ON, pilot pressure is applied to the overrun clutch control valve. This pushes up the overrun clutch control valve. The line pressure is then shut off so that the clutch does not engage.

When the solenoid valve is OFF, pilot pressure is not generated. At this point, the overrun clutch control valve moves downward by spring force. As a result, overrun clutch operation pressure is provided by the overrun clutch reducing valve. This causes the overrun clutch to engage.

In the 1st position, the overrun clutch control valve remains pushed down so that the overrun clutch is engaged at all times.

Control Valve

NHAT0016

FUNCTION OF CONTROL VALVES

NHAT0016S01

Valve name	Function
Pressure regulator valve, plug and sleeve plug	Regulates oil discharged from the oil pump to provide optimum line pressure for all driving conditions.
Pressure modifier valve and sleeve	Used as a signal supplementary valve to the pressure regulator valve. Regulates pressure-modifier pressure (signal pressure) which controls optimum line pressure for all driving conditions.

Valve name	Function
Pilot valve	Regulates line pressure to maintain a constant pilot pressure level which controls lock-up mechanism, overrun clutch, shift timing.
Accumulator control valve	Regulates accumulator back-pressure to pressure suited to driving conditions.
Manual valve	Directs line pressure to oil circuits corresponding to select positions. Hydraulic pressure drains when the shift lever is in Neutral.
Shift valve A	Simultaneously switches three oil circuits using output pressure of shift solenoid valve A to meet driving conditions (vehicle speed, throttle opening, etc.). Provides automatic downshifting and up-shifting (1st → 2nd → 3rd → 4th gears/4th → 3rd → 2nd → 1st gears) in combination with shift valve B.
Shift valve B	Simultaneously switches two oil circuits using output pressure of shift solenoid valve B in relation to driving conditions (vehicle speed, throttle opening, etc.). Provides automatic downshifting and up-shifting (1st → 2nd → 3rd → 4th gears/4th → 3rd → 2nd → 1st gears) in combination with shift valve A.
Overrun clutch control valve	Switches hydraulic circuits to prevent engagement of the overrun clutch simultaneously with application of the brake band in D_4. (Interlocking occurs if the overrun clutch engages during D_4.)
"1" reducing valve	Reduces low & reverse brake pressure to dampen engine-brake shock when downshifting from the 1st position 1_2 to 1_1.
Overrun clutch reducing valve	Reduces oil pressure directed to the overrun clutch and prevents engine-brake shock. In 1st and 2nd positions, line pressure acts on the overrun clutch reducing valve to increase the pressure-regulating point, with resultant engine brake capability.
Torque converter relief valve	Prevents an excessive rise in torque converter pressure.
Torque converter clutch control valve, plug and sleeve	Activates or inactivates the lock-up function. Also provides smooth lock-up through transient application and release of the lock-up system.
1-2 accumulator valve and piston	Dampens the shock encountered when 2nd gear band servo contracts, and provides smooth shifting.
3-2 timing valve	Switches the pace that oil pressure is released depending on vehicle speed; maximizes the high clutch release timing, and allows for soft down shifting.
Shuttle valve	Determines if the overrun clutch solenoid valve should control the 3-2 timing valve or the overrun clutch control valve and switches between the two.
Cooler check valve	At low speeds and with a small load when little heat is generated, saves the volume of cooler flow, and stores the oil pressure for lock up.

Introduction

NHAT0017

The A/T system has two self-diagnostic systems.
The first is the emission-related on board diagnostic system (OBD-II) performed by the TCM (transmission control module) in combination with the ECM. The malfunction is indicated by the MIL (malfunction indicator lamp) and is stored as a DTC in the ECM memory but not the TCM memory.
The second is the TCM original self-diagnosis indicated by the A/T CHECK indicator lamp. The malfunction is stored in the TCM memory. The detected items are overlapped with OBD-II self-diagnostic items. For detail, refer to AT-42.

OBD-II Function for A/T System

NHAT0018

The ECM provides emission-related on board diagnostic (OBD-II) functions for the A/T system. One function is to receive a signal from the TCM used with OBD-related parts of the A/T system. The signal is sent to the ECM when a malfunction occurs in the corresponding OBD-related part. The other function is to indicate a diagnostic result by means of the MIL (malfunction indicator lamp) on the instrument panel. Sensors, switches and solenoid valves are used as sensing elements.
The MIL automatically illuminates in One or Two Trip Detection Logic when a malfunction is sensed in relation to A/T system parts.

One or Two Trip Detection Logic of OBD-II

NHAT0019

ONE TRIP DETECTION LOGIC

NHAT0019S01

If a malfunction is sensed during the first test drive, the MIL will illuminate and the malfunction will be stored in the ECM memory as a DTC. The TCM is not provided with such a memory function.

TWO TRIP DETECTION LOGIC

NHAT0019S02

When a malfunction is sensed during the first test drive, it is stored in the ECM memory as a 1st trip DTC (diagnostic trouble code) or 1st trip freeze frame data. At this point, the MIL will not illuminate. — First Trip
If the same malfunction as that experienced during the first test drive is sensed during the second test drive, the MIL will illuminate. — Second Trip
A/T-related parts for which the MIL illuminates during the first or second test drive are listed below.

Items	MIL	
	One trip detection	Two trip detection
Shift solenoid valve A — DTC: P0750	X	
Shift solenoid valve B — DTC: P0755	X	
Accelerator pedal position sensor (Throttle position sensor) or switch — DTC: P1705	X	
Except above		X

The “trip” in the “One or Two Trip Detection Logic” means a driving mode in which self-diagnosis is performed during vehicle operation.

OBD-II Diagnostic Trouble Code (DTC)

NHAT0020

HOW TO READ DTC AND 1ST TRIP DTC

NHAT0020S01

DTC and 1st trip DTC can be read by the following methods.
(With CONSULT-II or GST GST) CONSULT-II or GST (Generic Scan Tool) Examples: P0705, P0710, P0720, P0725, etc.
These DTCs are prescribed by SAE J2012.
(CONSULT-II also displays the malfunctioning component or system.)

- **1st trip DTC No. is the same as DTC No.**
- **Output of the diagnostic trouble code indicates that the indicated circuit has a malfunction. However, in case of the Mode II and GST they do not indicate whether the malfunction is still occurring or occurred in the past and returned to normal.**
  CONSULT-II can identify them as shown below. Therefore, using CONSULT-II (if available) is recommended.

A sample of CONSULT-II display for DTC and 1st trip DTC is shown in the following page. DTC or 1st trip DTC of a malfunction is displayed in “SELF DIAGNOSIS” mode for “ENGINE” with CONSULT-II. Time data indicates how many times the vehicle was driven after the last detection of a DTC.

SELECT SYSTEM
A/T
ENGINE

SAT014K

If the DTC is being detected currently, the time data will be "0".

SELF-DIAG RESULTS	
DTC RESULTS	TIME
PNP SW/CIRC [P0705]	0

SAT015K

If a 1st trip DTC is stored in the ECM, the time data will be "1t".

SELF-DIAG RESULTS	
DTC RESULTS	TIME
PNP SW/CIRC [P0705]	1 t

SAT016K

Freeze Frame Data and 1st Trip Freeze Frame Data

NHAT0020S0101

The ECM has a memory function, which stores the driving condition such as fuel system status, calculated load value, engine coolant temperature, short term fuel trim, long term fuel trim, engine speed and vehicle speed at the moment the ECM detects a malfunction.

Data which are stored in the ECM memory, along with the 1st trip DTC, are called 1st trip freeze frame data, and the data, stored together with the DTC data, are called freeze frame data and displayed on CONSULT-II or GST. The 1st trip freeze frame data can only be displayed on the CONSULT-II screen, not on the GST. For detail, refer to EC-99, "CONSULT-II".

Only one set of freeze frame data (either 1st trip freeze frame data of freeze frame data) can be stored in the ECM. 1st trip freeze frame data is stored in the ECM memory along with the 1st trip DTC. There is no priority for 1st trip freeze frame data and it is updated each time a different 1st trip DTC is detected. However, once freeze frame data (2nd trip detection/MIL on) is stored in the ECM memory, 1st trip freeze frame data is no longer stored. Remember, only one set of freeze frame data can be stored in the ECM. The ECM has the following priorities to update the data.

Priority	Items	
1	Freeze frame data	Misfire — DTC: P0300 - P0306 Fuel Injection System Function — DTC: P0171, P0172, P0174, P0175
2		Except the above items (Includes A/T related items)
3	1st trip freeze frame data	

Both 1st trip freeze frame data and freeze frame data (along with the DTCs) are cleared when the ECM memory is erased.

HOW TO ERASE DTC

NHAT0020S02

The diagnostic trouble code can be erased by CONSULT-II, GST or ECM DIAGNOSTIC TEST MODE as described following.

- **If the battery terminal is disconnected, the diagnostic trouble code will be lost within 24 hours.**
- **When you erase the DTC, using CONSULT-II or GST is easier and quicker than switching the mode selector on the ECM.**

The following emission-related diagnostic information is cleared from the ECM memory when erasing DTC related to OBD-II. For details, refer to EC-75, "Emission-related Diagnostic Information".

- **Diagnostic trouble codes (DTC)**
- **1st trip diagnostic trouble codes (1st trip DTC)**
- **Freeze frame data**
- **1st trip freeze frame data**
- **System readiness test (SRT) codes**
- **Test values**

HOW TO ERASE DTC (WITH CONSULT-II)

NHAT0020S03

- **If a DTC is displayed for both ECM and TCM, it needs to be erased for both ECM and TCM.**

1. If the ignition switch stays ON after repair work, be sure to turn ignition switch OFF once. Wait at least 10 seconds and then turn it ON (engine stopped) again.
2. Turn CONSULT-II "ON" and touch "A/T".
3. Touch "SELF-DIAG RESULTS".
4. Touch "ERASE". (The DTC in the TCM will be erased.) Then touch "BACK" twice.
5. Touch "ENGINE".
6. Touch "SELF DIAGNOSIS".
7. Touch "ERASE". (The DTC in the ECM will be erased.)

How to erase DTC (With CONSULT-II)

1. If the ignition switch stays "ON" after repair work, be sure to turn ignition switch "OFF" once. Wait at least 10 seconds and then turn it "ON" (engine stopped) again.

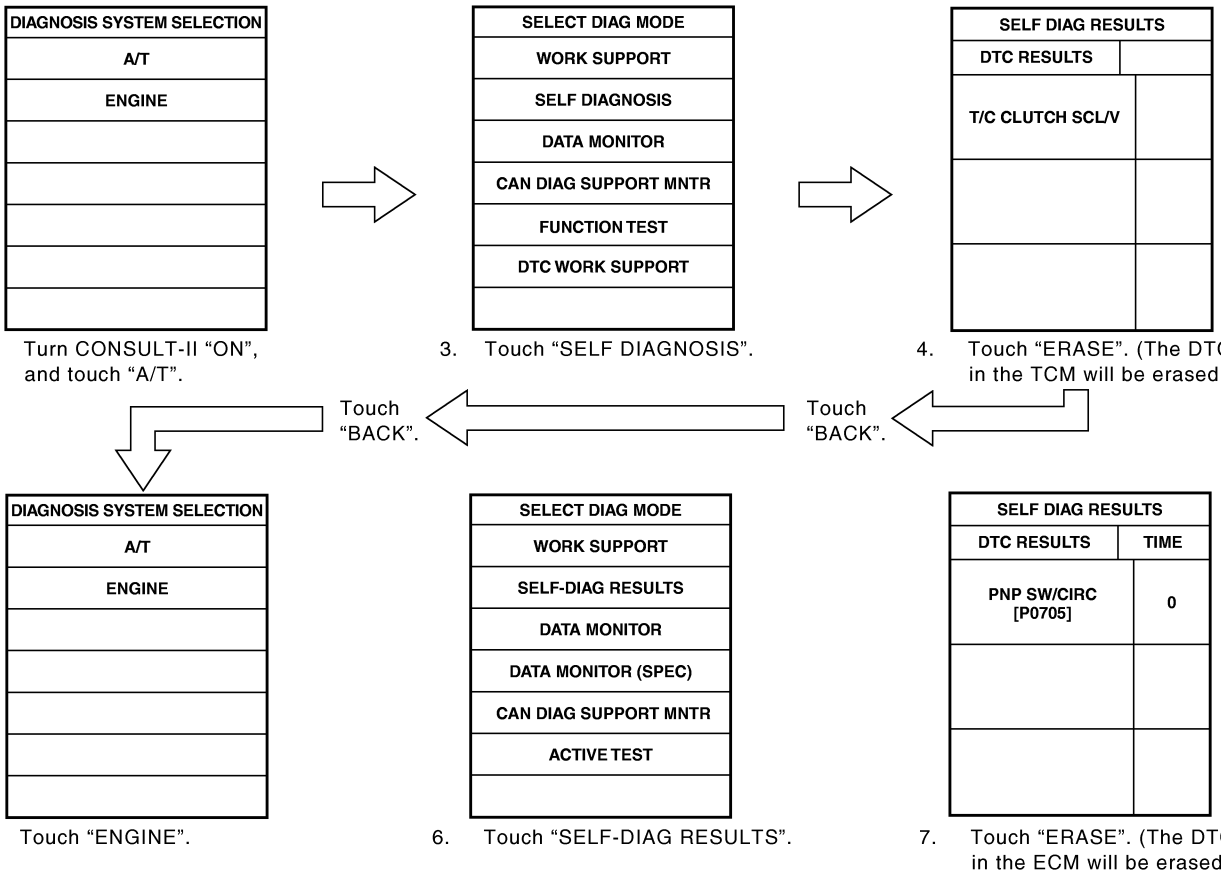

2. Turn CONSULT-II "ON", and touch "A/T".
3. Touch "SELF DIAGNOSIS".
4. Touch "ERASE". (The DTC in the TCM will be erased.)
5. Touch "ENGINE".
6. Touch "SELF-DIAG RESULTS".
7. Touch "ERASE". (The DTC in the ECM will be erased.)

SAT859K

HOW TO ERASE DTC (WITH GST)

NHAT0020S04

1. If the ignition switch stays ON after repair work, be sure to turn ignition switch OFF once. Wait at least 10 seconds and then turn it ON (engine stopped) again.
2. Perform "TCM SELF-DIAGNOSTIC PROCEDURE (NO TOOLS)". Refer to AT-52. (The engine warm-up step can be skipped when performing the diagnosis only to erase the DTC.)
3. Select Mode 4 with Generic Scan Tool (GST). For details, refer to EC-114, "Generic Scan Tool (GST)".

HOW TO ERASE DTC (NO TOOLS)

NHAT0020S05

1. If the ignition switch stays ON after repair work, be sure to turn ignition switch OFF once. Wait at least 10 seconds and then turn it ON (engine stopped) again.
2. Perform "TCM SELF-DIAGNOSTIC PROCEDURE (NO TOOLS)". Refer to AT-52. (The engine warm-up step can be skipped when performing the diagnosis only to erase the DTC.)
3. Perform "OBD-II SELF-DIAGNOSTIC PROCEDURE (NO TOOLS)". Refer to AT-52.

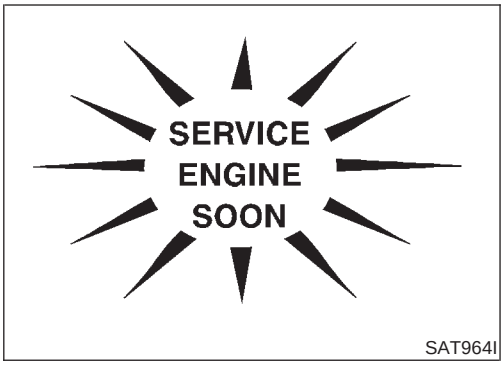

Malfunction Indicator Lamp (MIL)

=NHAT0021

1. The malfunction indicator lamp will light up when the ignition switch is turned ON without the engine running. This is for checking the lamp.

- If the malfunction indicator lamp does not light up, refer to EL-150, “WARNING LAMPS”.
  [Or see EC-90, “Malfunction indicator lamp (MIL)” and EC-99, “CONSULT-II”.]

2. When the engine is started, the malfunction indicator lamp should go off.
   If the lamp remains on, the on board diagnostic system has detected an emission-related (OBD-II) malfunction. For detail, refer to EC-74, “ON BOARD DIAGNOSTIC SYSTEM DESCRIPTION”.

CONSULT-II

NHAT0022

After performing “SELF-DIAGNOSTIC PROCEDURE (WITH CONSULT-II)” (AT-41), place check marks for results on the “Diagnostic Worksheet”, AT-60. Reference pages are provide following the items.

NOTICE:

1) The CONSULT-II electrically displays shift timing and lock-up timing (that is, operation timing of each solenoid).
   Check for time difference between actual shift timing and the CONSULT-II display. If the difference is noticeable, mechanical parts (except solenoids, sensors, etc.) may be malfunctioning. Check mechanical parts using applicable diagnostic procedures.
2) Shift schedule (which implies gear position) displayed on CONSULT-II and that indicated in Service Manual may differ slightly. This occurs because of the following reasons:

- Actual shift schedule has more or less tolerance or allowance,
- Shift schedule indicated in Service Manual refers to the point where shifts start, and
- Gear position displayed on CONSULT-II indicates the point where shifts are completed.

3) Shift solenoid valve “A” or “B” is displayed on CONSULT-II at the start of shifting. Gear position is displayed upon completion of shifting (which is computed by TCM).
4) Additional CONSULT-II information can be found in the Operation Manual supplied with the CONSULT-II unit.

FUNCTION

=NHAT0022S11

Diagnostic test mode	Function	Reference page
Self-diagnostic results	Self-diagnostic results can be read and erased quickly.	Refer to AT-41
Work support	This mode enables a technician to adjust some devices faster and more accurately by following the indications on CONSULT-II.	—
Data monitor	Input/Output data in the ECM can be read.	Refer to AT-44
CAN diagnostic support monitor	The results of transmit/receive diagnosis of CAN communication can be read.	—
Function test	Conducted by CONSULT-II instead of a technician to determine whether each system is "OK" or "NG".	—
DTC work support	Select the operating condition to confirm Diagnosis Trouble Codes.	Refer to AT-47
ECM part number	ECM part number can be read.	—

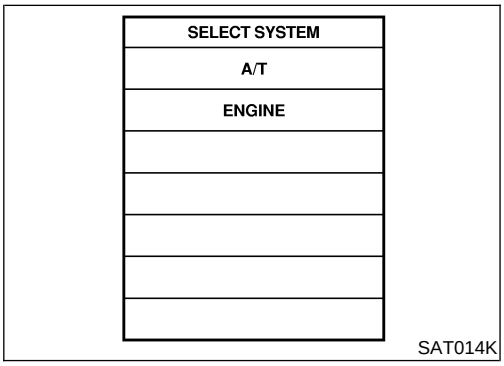

SAT014K

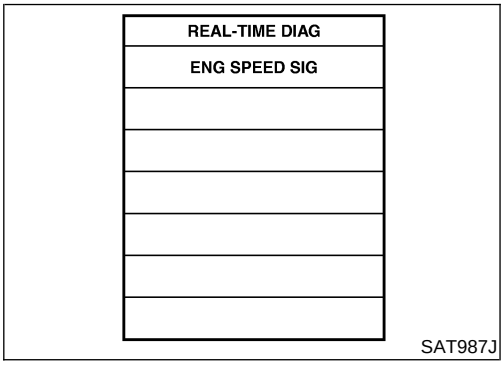

SAT987J

SELF-DIAGNOSTIC PROCEDURE (WITH CONSULT-II)

NHAT0022S01

1. Turn on CONSULT-II and touch "ENGINE" for OBD-II detected items or touch "A/T" for TCM self-diagnosis.
   If "ENGINE" or "A/T" is not displayed, go to GI-42, "CONSULT-II Data Link Connector (DLC) Circuit".

2. Touch "SELF DIAGNOSIS".
   Display shows malfunction experienced since the last erasing operation.
   CONSULT-II performs "Real Time Diagnosis".
   Also, any malfunction detected while in this mode will be displayed at real time.

SELF-DIAGNOSTIC RESULT TEST MODE

NHAT0022S02

Detected items (Screen terms for CONSULT-II, "SELF DIAGNOSIS" test mode)		Malfunction is detected when ...	TCM self-diagnosis	OBD-II (DTC)
"A/T"	"ENGINE"		A/T CHECK Available by A/T CHECK indicator lamp	SERVICE ENGINE SOON Available by malfunction indicator lamp*2, "ENGINE" on CONSULT-II or GST
Park/neutral position (PNP) switch circuit		● TCM does not receive the correct voltage signal (based on the gear position) from the switch.	—	P0705
—	PNP SW/CIRC			
Revolution sensor		● TCM does not receive the proper voltage signal from the sensor.	X	P0720
VHCL SPEED SEN·A/T	VEH SPD SEN/ CIR AT			
Vehicle speed signal (from Meter)		● TCM does not receive the proper voltage signal from the combination meter.	X	—
VHCL SPEED SEN·MTR	—			
A/T 1st gear function		● A/T cannot be shifted to the 1st gear position even if electrical circuit is good.	—	P0731*1
A/T 1ST GR FNCTN	A/T 1ST GR FNCTN			
A/T 2nd gear function		● A/T cannot be shifted to the 2nd gear position even if electrical circuit is good.	—	P0732*1
A/T 2ND GR FNCTN	A/T 2ND GR FNCTN			
A/T 3rd gear function		● A/T cannot be shifted to the 3rd gear position even if electrical circuit is good.	—	P0733*1
A/T 3RD GR FNCTN	A/T 3RD GR FNCTN			
A/T 4th gear function		● A/T cannot be shifted to the 4th gear position even if electrical circuit is good.	—	P0734*1
A/T 4TH GR FNCTN	A/T 4TH GR FNCTN			
A/T TCC S/V function (lock-up)		● A/T cannot perform lock-up even if electrical circuit is good.	—	P0744*1
AT TCC S/V FNCTN	A/T TCC S/V FNCTN			
Shift solenoid valve A		● TCM detects an improper voltage drop when it tries to operate the solenoid valve.	X	P0750
SHIFT SOLENOID/V A	SFT SOL A/CIRC			
Shift solenoid valve B		● TCM detects an improper voltage drop when it tries to operate the solenoid valve.	X	P0755
SHIFT SOLENOID/V B	SFT SOL B/CIRC			
Overrun clutch solenoid valve		● TCM detects an improper voltage drop when it tries to operate the solenoid valve.	X	P1760
OVERRUN CLUTCH S/V	O/R CLUCH SOL/ CIRC			
T/C clutch solenoid valve		● TCM detects an improper voltage drop when it tries to operate the solenoid valve.	X	P0740
T/C CLUTCH SOL/V	TCC SOLENOID/ CIRC			
Line pressure solenoid valve		● TCM detects an improper voltage drop when it tries to operate the solenoid valve.	X	P0745
LINE PRESSURE S/V	L/PRESS SOL/ CIRC			

Detected items (Screen terms for CONSULT-II, "SELF DIAGNOSIS" test mode)		Malfunction is detected when ...	TCM self-diagnosis	OBD-II (DTC)
"A/T"	"ENGINE"		A/T CHECK Available by A/T CHECK indicator lamp	SERVICE ENGINE SOON Available by malfunction indicator lamp*2, "ENGINE" on CONSULT-II or GST
Accelerator pedal position sensor		• TCM receives an excessively low or high voltage from the sensor.	X	P1705
THROTTLE POSI SEN	TP SEN/CIRC A/T			
Engine speed signal		• TCM does not receive the proper voltage signal from the ECM.	X	P0725
ENGINE SPEED SIG	—			
A/T fluid temperature sensor		• TCM receives an excessively low or high voltage from the sensor.	X	P0710
BATT/FLUID TEMP SEN	ATF TEMP SEN/ CIRC			
CAN communication*3		• When malfunction is detected in CAN communication line.	X	U1000
CAN COMM CIRCUIT	CAN COMM CIRCUIT			
Power train revolution sensor		• TCM does not receive the proper voltage signal from the sensor.	X	—
TURBINE REV	—			
TCM (RAM)		• TCM memory (RAM) is malfunctioning	—	—
CONTROL UNIT (RAM)	—			
TCM (ROM)		• TCM memory (ROM) is malfunctioning	—	—
CONTROL UNIT (ROM)	—			
TCM (EEP ROM)		• TCM memory (EEP ROM) is malfunctioning.	—	—
CONT UNIT (EEP ROM)	—			
Initial start		• This is not a malfunction message (Whenever shutting off a power supply to the TCM, this message appears on the screen.)	X	—
INITIAL START	—			
No failure (NO SELF DIAGNOSTIC FAILURE INDICATED FURTHER TESTING MAY BE REQUIRED**)		• No failure has been detected.	X	X

X: Applicable

−: Not applicable

*1: These malfunctions cannot be displayed by MIL SERVICE ENGINE SOON if another malfunction is assigned to MIL.

*2: Refer to EC-90, "Malfunction Indicator Lamp (MIL)".

*3: If malfunction is detected in multiple systems including CAN communication line, CAN communication line trouble diagnosis shall be performed first.

DATA MONITOR MODE (A/T)

NHAT0022S03

Item	Display	Selection monitor item			Description	Remarks
		TCM INPUT SIGNALS	MAIN SIGNALS	SELECTION FROM MENU		
Vehicle speed sensor 1 (A/T) (Revolution sensor)	VHCL/S SE·A/T [km/h] or [mph]	X	—	▼	● Vehicle speed computed from signal of revolution sensor is displayed.	When racing engine in "N" or "P" position with vehicle stationary, CONSULT-II data may not indicate 0 km/h (0 mph).
Vehicle speed sensor 2 (Meter)	VHCL/S SE·MTR [km/h] or [mph]	X	—	▼	● Vehicle speed computed from signal of vehicle speed signal is displayed.	Vehicle speed display may not be accurate under approx. 10 km/h (6 mph). It may not indicate 0 km/h (0 mph) when vehicle is stationary.
Accelerator pedal position sensor	THRTL POS SEN [V]	X	—	▼	● Accelerator pedal position sensor signal voltage is displayed.	
A/T fluid temperature sensor	FLUID TEMP SE [V]	X	—	▼	● A/T fluid temperature sensor signal voltage is displayed. ● Signal voltage lowers as fluid temperature rises.	
Battery voltage	BATTERY VOLT [V]	X	—	▼	● Source voltage of TCM is displayed.	
Engine speed	ENGINE SPEED [rpm]	X	X	▼	● Engine speed, computed from engine speed signal, is displayed.	Engine speed display may not be accurate under approx. 800 rpm. It may not indicate 0 rpm even when engine is not running.
Power train revolution sensor	TURBINE REV [rpm]	X	—	▼	● This sensor checks the changing speed then perform the oil pressure control and the torque down control.	Error may occur under approx. 800 rpm and will not indicate 0 rpm even if engine is not running.
3rd position switch	OVERDRIVE SW [ON/OFF]	X	—	▼	● ON/OFF status, computed from signal of 3rd position switch, is displayed.	
PN position (PNP) switch	PN POSI SW [ON/OFF]	X	—	▼	● ON/OFF status, computed from signal of PN position switch, is displayed.	
R position switch	R POSITION SW [ON/OFF]	X	—	▼	● ON/OFF status, computed from signal of R position switch, is displayed.	
D position switch	D POSITION SW [ON/OFF]	X	—	▼	● ON/OFF status, computed from signal of D position switch, is displayed.	

Item	Display	Selection monitor item			Description	Remarks
		TCM INPUT SIGNALS	MAIN SIGNALS	SELECTION FROM MENU		
2 position switch	2 POSITION SW [ON/OFF]	X	—	▼	● ON/OFF status, computed from signal of 2 position switch, is displayed.	
1 position switch	1 POSITION SW [ON/OFF]	X	—	▼	● ON/OFF status, computed from signal of 1 position switch, is displayed.	
ASCD cruise signal	ASCD-CRUISE [ON/OFF]	X	—	▼	● Status of ASCD cruise signal is displayed. ON ... Cruising state OFF ... Normal running state	This is displayed even when no ASCD is mounted.
ASCD OD cut signal	ASCD-OD CUT [ON/OFF]	X	—	▼	● Status of ASCD OD release signal is displayed. ON ... OD released OFF ... OD not released	This is displayed even when no ASCD is mounted.
Kickdown switch	KICKDOWN SW [ON/OFF]	X	—	▼	● ON/OFF status, computed from signal of kickdown switch, is displayed.	This is displayed even when no kickdown switch is equipped.
A/T mode switch	POWER SHIFT SW [ON/OFF]	X	—	▼		Not mounted but displayed.
Closed throttle position signal	CLOSED THL/SW [ON/OFF]	X	—	▼	● ON/OFF status, computed from signal of closed throttle position signal, is displayed.	This means closed throttle position signal input via CAN communication line.
Wide open throttle position signal	W/O THRL/ P-SW [ON/OFF]	X	—	▼	● ON/OFF status, computed from signal of wide open throttle position signal, is displayed.	This means wide open throttle position signal input via CAN communication line.
Shift solenoid valve A	*SHIFT S/V A [ON/OFF]	—	—	▼	● Displays status of check signal (re-input signal) for TCM control signal output. Remains unchanged when solenoid valves are open or shorted.	
Shift solenoid valve B	*SHIFT S/V B [ON/OFF]	—	—	▼		
Overrun clutch solenoid valve	*OVRRUN/C S/V [ON/OFF]	—	—	▼		
A/T mode switch	HOLD SW [ON/OFF]	X	—	▼		Not mounted but displayed.

Item	Display	Selection monitor item			Description	Remarks
		TCM INPUT SIGNALS	MAIN SIGNALS	SELECTION FROM MENU		
Stop lamp switch	BRAKE SW [ON/OFF]	X	—	▼	● ON/OFF status is displayed. ON ... Brake pedal is depressed. OFF ... Brake pedal is released.	
Gear position	GEAR	—	X	▼	● Gear position data used for computation by TCM, is displayed.	
Selector lever position	SLCT LVR POSI	—	X	▼	● Selector lever position data, used for computation by TCM, is displayed.	A specific value used for control is displayed if fail-safe is activated due to error.
Vehicle speed	VEHICLE SPEED [km/h] or [mph]	—	X	▼	● Vehicle speed data, used for computation by TCM, is displayed.	
Throttle position	THROTTLE POSI [/8]	—	X	▼	● Throttle position data, used for computation by TCM, is displayed.	A specific value used for control is displayed if fail-safe is activated due to error.
Line pressure duty	LINE PRES DTY [%]	—	X	▼	● Control value of line pressure solenoid valve, computed by TCM from each input signal, is displayed.	
Torque converter clutch solenoid valve duty	TCC S/V DUTY [%]	—	X	▼	● Control value of torque converter clutch solenoid valve, computed by TCM from each input signal, is displayed.	
Shift solenoid valve A	SHIFT S/V A [ON/OFF]	—	X	▼	● Control value of shift solenoid valve A, computed by TCM from each input signal, is displayed.	Control value of solenoid is displayed even if solenoid circuit is disconnected. The "OFF" signal is displayed if solenoid circuit is shorted.
Shift solenoid valve B	SHIFT S/V B [ON/OFF]	—	X	▼	● Control value of shift solenoid valve B, computed by TCM from each input signal, is displayed.	
Overrun clutch solenoid valve	OVERRUN/C S/V [ON/OFF]	—	X	▼	● Control value of overrun clutch solenoid valve computed by TCM from each input signal is displayed.	
Self-diagnosis display lamp (A/T CHECK indicator lamp)	SELF-D DP LMP [ON/OFF]	—	X	▼	● Control status of A/T CHECK indicator lamp is displayed.	

Item	Display	Selection monitor item			Description	Remarks
		TCM INPUT SIGNALS	MAIN SIGNALS	SELECTION FROM MENU		
Torque converter slip ratio	TC SLIP RATIO [0.000]	—	—	▼	● Ratio of engine revolution to input shaft revolution of torque converter	
Torque converter slip speed	TC SLIP SPEED [rpm]	—	—	▼	● Difference in revolution between input shaft revolution and input shaft revolution of torque converter	Display doesn't indicate 0 rpm even if engine is stopped. But this isn't malfunction.
Voltage	Voltage [V]	—	—	▼	● Value measured by voltage probe is displayed.	
Frequency	Frequency [Hz]	—	—	▼	● Value measured by pulse probe is displayed. If measurement is impossible, "#" sign is displayed. "#" sign is also displayed at the final data value until the measurement result is obtained.	
Duty cycle (high)	DUTY-HI [%]	—	—	▼	● Duty cycle value for measurement probe is displayed.	
Duty cycle (low)	DUTY-LOW [%]	—	—	▼		
Plus width (high)	PLS WIDTH-HI [msec]	—	—	▼	● Measured pulse width of measurement probe is displayed.	
Plus width (low)	PLS WIDTH-LOW [msec]	—	—	▼		

X: Applicable —: Not applicable ▼: Option

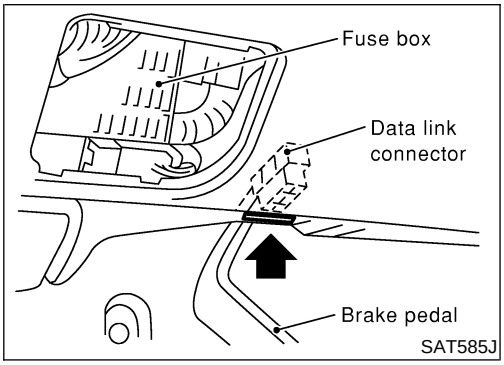

DTC WORK SUPPORT MODE WITH CONSULT-II

NHAT0022S04

CONSULT-II Setting Procedure

NHAT0022S0401

1. Turn ignition switch OFF.
2. Connect CONSULT-II and CONSULT-II CONVERTER to Data link connector, which is located in left side dash panel.

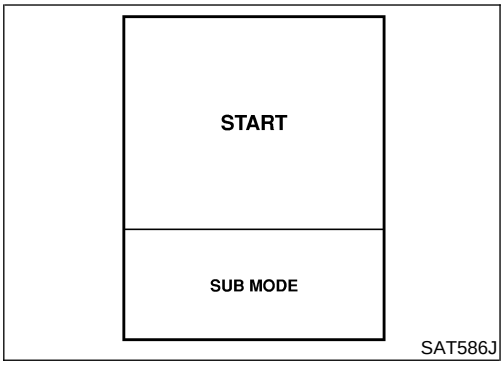

3. Turn ignition switch ON.
4. Touch "START".

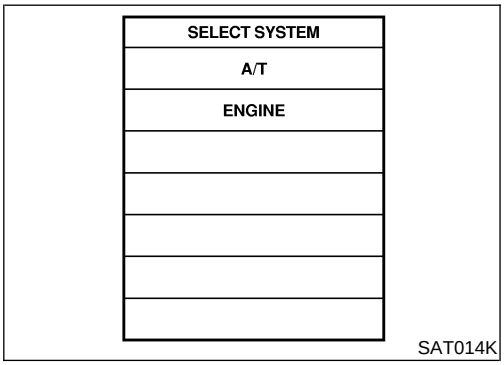

5. Touch "A/T". If "A/T" is not indicated, go to GI-42, "CONSULT-II Data Link Connector (DLC) Circuit".

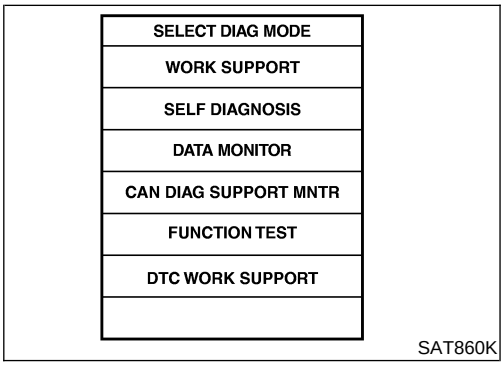

6. Touch "DTC WORK SUPPORT".

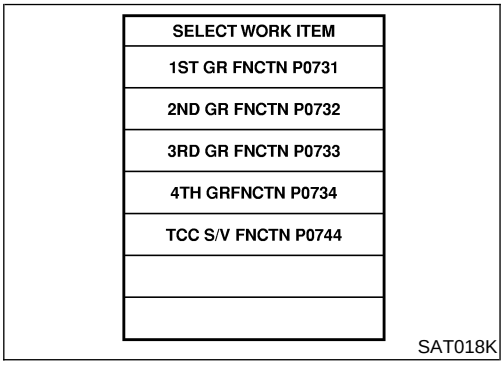

7. Touch select item menu (1ST, 2ND, etc.).

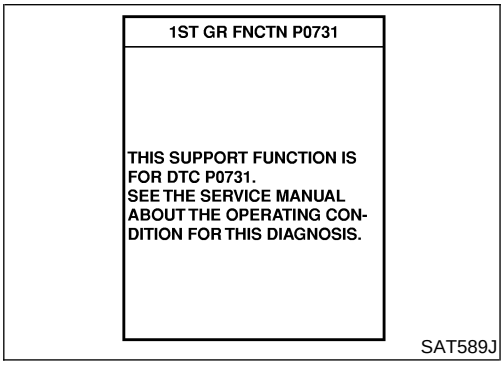

8. Touch "START".

1ST GR FNCTN P0731	
OUT OF CONDTION	
MONITOR	
GEAR	XXX
VEHICLE SPEED	XXXkm/h
THROTTLE POSI	XXX
TCC S/V DUTY	XXX %

SAT019K

9. Perform driving test according to "DTC CONFIRMATION PROCEDURE" in "TROUBLE DIAGNOSIS FOR DTC".

1ST GR FNCTN P0731	
TESTING	
MONITOR	
GEAR	XXX
VEHICLE SPEED	XXXkm/h
THROTTLE POSI	XXX
TCC S/V DUTY	XXX %

SAT591J

- **When testing conditions are satisfied, CONSULT-II screen changes from "OUT OF CONDITION" to "TESTING".**

1ST GR FNCTN P0731
STOP VEHICLE

SAT592J

10. Stop vehicle. If "NG" appears on the screen, malfunction may exist. Go to "DIAGNOSTIC PROCEDURE".

1ST GR FNCTN P0731
NG

SAT593J

1ST GR FNCTN P0731
DRIVE VHCL IN D RANGE SHIFTING 1→2→3→4 UNDER NORMAL ACCELERATION. DOES A/T SHFT NORMAL CHECK FOR PROPER SHF TIMING AND SHFT SHOCK

SAT594J

11. Perform test drive to check gear shift feeling in accordance with instructions displayed.

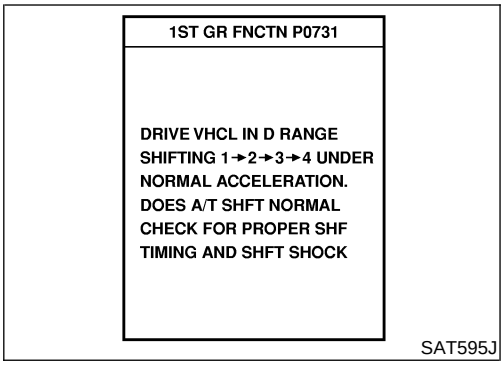

12. Touch "YES" or "NO".

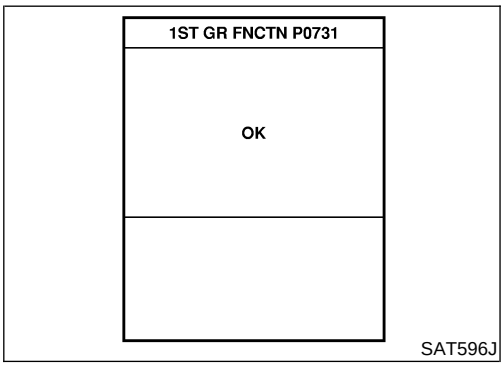

13. CONSULT-II procedure ended.
    If "NG" appears on the screen, a malfunction may exist. Go to "DIAGNOSTIC PROCEDURE".

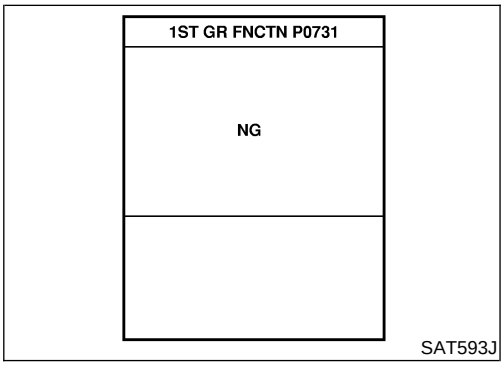

DTC WORK SUPPORT MODE

NHAT0022S05

DTC work support item	Description	Check item
1ST GR FNCTN P0731	Following items for "A/T 1st gear function (P0731)" can be confirmed. ● Self-diagnosis status (whether the diagnosis is being conducted or not) ● Self-diagnosis result (OK or NG)	● Shift solenoid valve A ● Shift solenoid valve B ● Each clutch ● Hydraulic control circuit
2ND GR FNCTN P0732	Following items for "A/T 2nd gear function (P0732)" can be confirmed. ● Self-diagnosis status (whether the diagnosis is being conducted or not) ● Self-diagnosis result (OK or NG)	● Shift solenoid valve B ● Each clutch ● Hydraulic control circuit
3RD GR FNCTN P0733	Following items for "A/T 3rd gear function (P0733)" can be confirmed. ● Self-diagnosis status (whether the diagnosis is being conducted or not) ● Self-diagnosis result (OK or NG)	● Shift solenoid valve A ● Each clutch ● Hydraulic control circuit

DTC work support item	Description	Check item
4TH GR FNCTN P0734	Following items for "A/T 4th gear function (P0734)" can be confirmed. ● Self-diagnosis status (whether the diagnosis is being conducted or not) ● Self-diagnosis result (OK or NG)	● Shift solenoid valve A ● Shift solenoid valve B ● Overrun clutch solenoid valve ● Line pressure solenoid valve ● Each clutch ● Hydraulic control circuit
TCC S/V FNCTN P0744	Following items for "A/T TCC S/V function (lock-up) (P0744)" can be confirmed. ● Self-diagnosis status (whether the diagnosis is being conducted or not) ● Self-diagnosis result (OK or NG)	● Torque converter clutch solenoid valve ● Each clutch ● Hydraulic control circuit

Diagnostic Procedure Without CONSULT-II

=NHAT0023

OBD-II SELF-DIAGNOSTIC PROCEDURE (WITH GST)

NHAT0023S01

Refer to EC-114, “Generic Scan Tool (GST)”.

OBD-II SELF-DIAGNOSTIC PROCEDURE (NO TOOLS)

NHAT0023S02

Refer to EC-90, “Malfunction Indicator Lamp (MIL)”.

TCM SELF-DIAGNOSTIC PROCEDURE (NO TOOLS)

NHAT0023S03

1	CHECK A/T CHECK INDICATOR LAMP

1. Move selector lever to P position.
   Start engine and warm it up to normal engine operating temperature.
2. Turn ignition switch to OFF position.
3. Wait 5 seconds.
4. Turn ignition switch to ON position.
   (Do not start engine.)

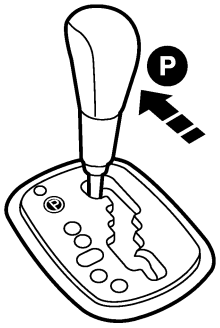

SAT491K

5. Does A/T CHECK indicator lamp come on for about 2 seconds?

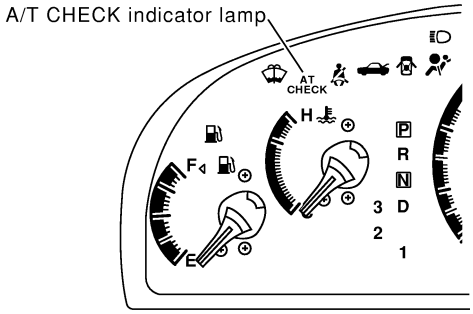

SAT604K

Yes or No

Yes	▶	GO TO 2.
No	▶	Stop procedure. Perform “A/T CHECK Indicator Lamp Does Not Come On”, AT-222 before proceeding.

2	JUDGEMENT PROCEDURE STEP 1

1. Turn ignition switch to OFF position.
2. Push and hold shift lock release button.
3. Depress and hold accelerator pedal fully. Depress brake pedal, then move selector lever from P to 3 position.
4. Turn ignition switch to ON position.
   (Do not start engine.)

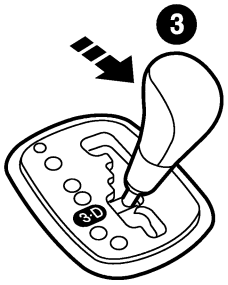

SAT854K

5. Wait 3 seconds.
6. Move selector lever to 2nd position.
7. Release accelerator pedal and brake pedal.

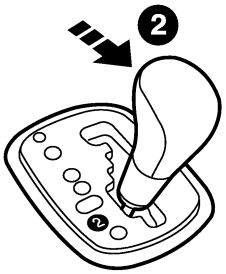

SAT494K

▶	GO TO 3.

3	JUDGEMENT PROCEDURE STEP 2

1. Move selector lever to 1st position.
2. Depress brake pedal.
3. Depress accelerator pedal fully and release it.
4. The A/T CHECK indicator lamp will begin to flash ON and OFF.

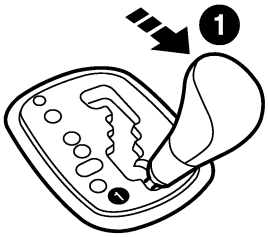

SAT495K

▶	GO TO 4.

4	CHECK SELF-DIAGNOSTIC CODE
Check A/T CHECK indicator lamp. Refer to "JUDGEMENT OF SELF-DIAGNOSIS CODE", AT-55. 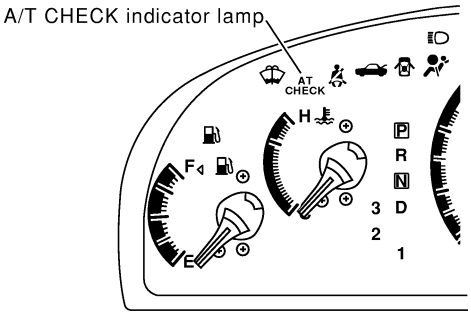 SAT604K	
▶	**DIAGNOSIS END**

JUDGEMENT OF SELF-DIAGNOSIS CODE

=NHAT0023S04

A/T CHECK indicator lamp:

All judgement flickers are the same.

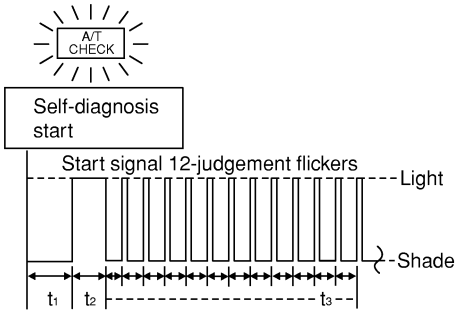

SAT518K

All circuits that can be confirmed by self-diagnosis are OK.

1st judgement flicker is longer than others.

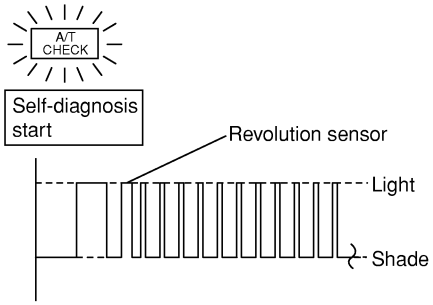

SAT543K

Revolution sensor circuit is short-circuited or disconnected.
⇒ **Go to VEHICLE SPEED SENSOR·A/T (REVOLUTION SENSOR), AT-120.**

2nd judgement flicker is longer than others.

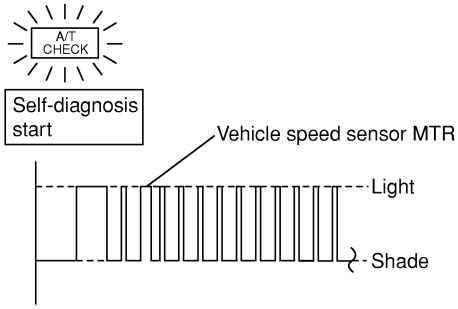

SAT544K

Vehicle speed sensor circuit is short-circuited or disconnected.
⇒ **Go to VEHICLE SPEED SENSOR·MTR, AT-206.**

3rd judgement flicker is longer than others.

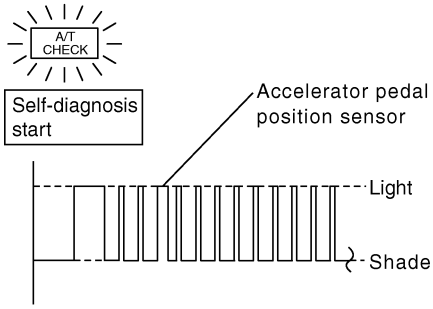

SAT545KC

Accelerator pedal position sensor (throttle position sensor) circuit is short-circuited or disconnected.
⇒ **GO TO ACCELERATOR PEDAL POSITION SENSOR (THROTTLE POSITION SENSOR), AT-188.**

4th judgement flicker is longer than others.

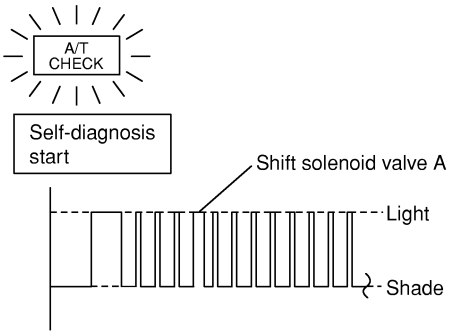

SAT546K

Shift solenoid valve A circuit is short-circuited or disconnected.
⇒ **Go to SHIFT SOLENOID VALVE A, AT-178.**

5th judgement flicker is longer than others.

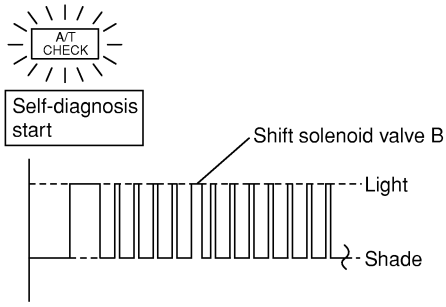

SAT547K

Shift solenoid valve B circuit is short-circuited or disconnected.
⇒ **Go to SHIFT SOLENOID VALVE B, AT-183.**

A/T CHECK indicator lamp:

6th judgement flicker is longer than others.

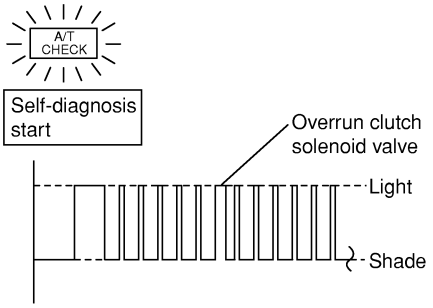

SAT548K

Overrun clutch solenoid valve circuit is short-circuited or disconnected.
⇒ **Go to OVERRUN CLUTCH SOLENOID VALVE, AT-194.**

7th judgement flicker is longer than others.

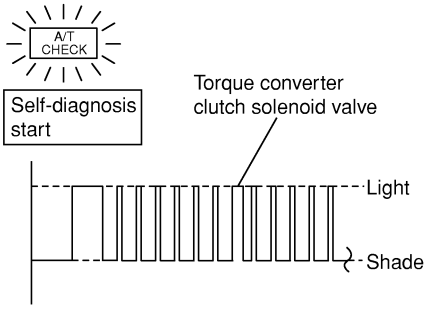

SAT549K

Torque converter clutch solenoid valve circuit is short-circuited or disconnected.
⇒ **Go to TORQUE CONVERTER CLUTCH SOLENOID VALVE, AT-157.**

8th judgement flicker is longer than others.

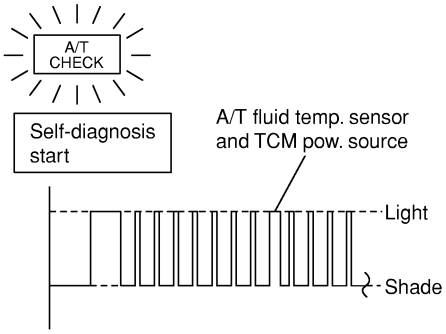

SAT550K

A/T fluid temperature sensor is disconnected or TCM power source circuit is damaged.
⇒ **Go to A/T FLUID TEMPERATURE SENSOR AND TCM POWER SOURCE, AT-199.**

9th judgement flicker is longer than others.

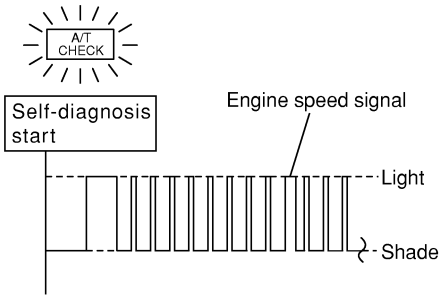

SAT551K

Engine speed signal circuit is short-circuited or disconnected.
⇒ **Go to ENGINE SPEED SIGNAL, AT-125.**

10th judgement flicker is longer than others.

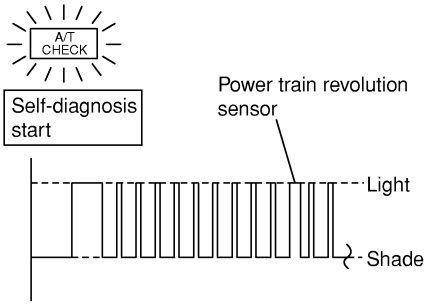

SAT552K

Power train revolution circuit is short-circuited or disconnected.
⇒ **Go to POWER TRAIN REVOLUTION SENSOR, AT-211.**

11th judgement flicker is longer than others.

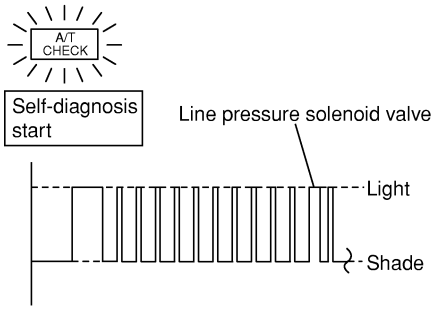

SAT553K

Line pressure solenoid valve circuit is short-circuited or disconnected.
⇒ **Go to LINE PRESSURE SOLENOID VALVE, AT-172.**

A/T CHECK indicator lamp:	
12th judgement flicker is longer than others. 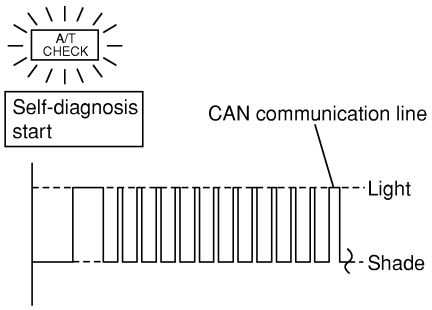 SAT554K CAN communication line is damaged. ⇒ **Go to CAN COMMUNICATION LINE, AT-104.**	Lamp comes off. 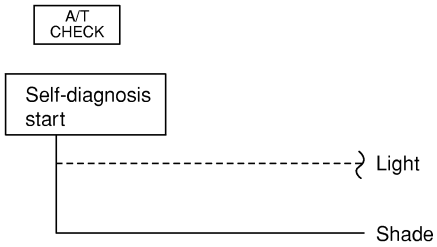 SAT555K Park/neutral position (PNP) switch, 3rd position switch, closed throttle position signal or wide-open throttle position signal circuit is disconnected or TCM is damaged. ⇒ **Go to TCM Self-diagnosis Does Not Activate, AT-265.**
Flickers as shown below. 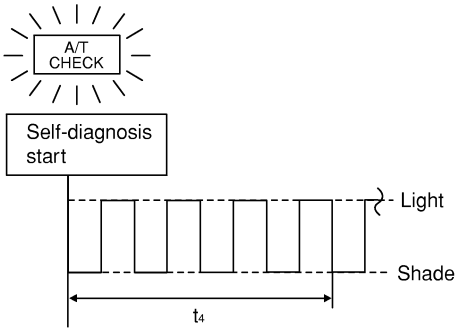 SAT556K Battery power is low. Battery has been disconnected for a long time. Battery is connected conversely. (When reconnecting TCM connectors. — This is not a problem.)	

t_1 = 2.5 seconds t_2 = 2.0 seconds t_3 = 1.0 second t_4 = 1.0 second

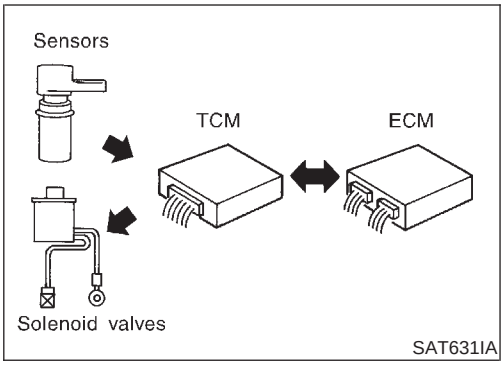

SAT631IA

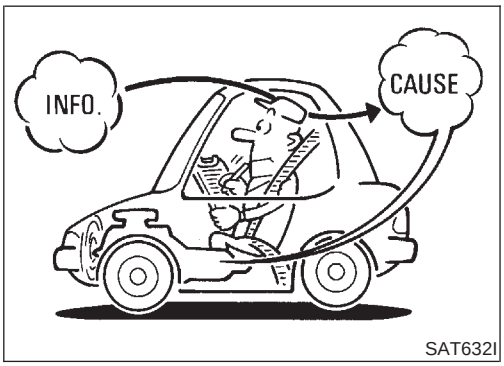

SAT632I

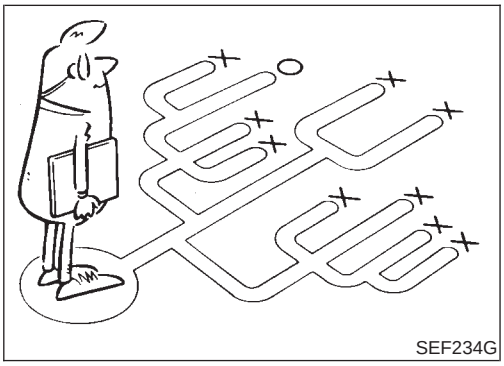
SEF234G

Introduction

NHAT0024

The TCM receives a signal from the vehicle speed sensor, electric throttle control actuator (throttle position sensor) or park/neutral position (PNP) switch and provides shift control or lock-up control via A/T solenoid valves.

The TCM also communicates with the ECM by means of a signal sent from sensing elements used with the OBD-related parts of the A/T system for malfunction-diagnostic purposes. The TCM is capable of diagnosing malfunctioning parts while the ECM can store malfunctions in its memory.

Input and output signals must always be correct and stable in the operation of the A/T system. The A/T system must be in good operating condition and be free of valve seizure, solenoid valve malfunction, etc.

It is much more difficult to diagnose an incident that occurs intermittently rather than continuously. Most intermittent incidents are caused by poor electric connections or improper wiring. In this case, careful checking of suspected circuits may help prevent the replacement of good parts.

A visual check only, may not find the cause of the incidents. A road test with CONSULT-II (or GST) or a circuit tester connected should be performed. Follow the “Work Flow”. Refer to AT-62.

Before undertaking actual checks, take a few minutes to talk with a customer who approaches with a driveability complaint. The customer can supply good information about such incidents, especially intermittent ones. Find out what symptoms are present and under what conditions they occur. A “DIAGNOSITC WORKSHEET” like the example (AT-59) should be used.

Start your diagnosis by looking for “conventional” incidents first. This will help troubleshoot driveability incidents on an electronically controlled engine vehicle.

Also check related Service bulletins for information.

DIAGNOSTIC WORKSHEET

=NHAT0024S01

Information from Customer

NHAT0024S0101

KEY POINTS

WHAT ..... Vehicle & A/T model
WHEN ..... Date, Frequencies
WHERE ..... Road conditions
HOW ..... Operating conditions, Symptoms

Customer name MR/MS	Model & Year	VIN
Trans. model	Engine	Mileage
Incident Date	Manuf. Date	In Service Date
Frequency	☐ Continuous ☐ Intermittent (times a day)	
Symptoms	☐ Vehicle does not move. (☐ Any position ☐ Particular position)	
	☐ No up-shift (☐ 1st → 2nd ☐ 2nd → 3rd ☐ 3rd → O/D)	
	☐ No down-shift (☐ O/D → 3rd ☐ 3rd → 2nd ☐ 2nd → 1st)	
	☐ Lockup malfunction	
	☐ Shift point too high or too low.	
	☐ Shift shock or slip (☐ N → D ☐ Lockup ☐ Any drive position)	
	☐ Noise or vibration	
	☐ No kickdown	
	☐ No pattern select	
	☐ Others ( )	
A/T CHECK indicator lamp	Blinks for about 8 seconds.	
	☐ Continuously lit	☐ Not lit
Malfunction indicator lamp (MIL)	☐ Continuously lit	☐ Not lit

Diagnostic Worksheet

=NHAT0024S0102

1.	☐ Read the Fail-safe and listen to customer complaints.			AT-9
2.	☐ CHECK A/T FLUID			AT-64
		☐ Leakage (Follow specified procedure) ☐ Fluid condition ☐ Fluid level		
3.	☐ Perform STALL TEST and LINE PRESSURE TEST.			AT-64, 68
		☐ Stall test — Mark possible damaged components/others.		
			☐ Torque converter one-way clutch ☐ Reverse clutch ☐ Forward clutch ☐ Overrun clutch ☐ Forward one-way clutch	☐ Low & reverse brake ☐ Low one-way clutch ☐ Engine ☐ Line pressure is low ☐ Clutches and brakes except high clutch and brake band are OK
		☐ Line pressure test — Suspected parts:		
4.	☐ Perform all ROAD TEST and mark required procedures.			AT-69
	4-1.	Check before engine is started.		AT-70
		☐ A/T CHECK Indicator Lamp Does Not Come On, AT-222. ☐ SELF-DIAGNOSTIC PROCEDURE - Mark detected items.		
			☐ Park/neutral position (PNP) switch, AT-108. ☐ A/T fluid temperature sensor, AT-114. ☐ Vehicle speed sensor·A/T (Revolution sensor), AT-120. ☐ Engine speed signal, AT-125. ☐ Power train revolution sensor, AT-211. ☐ Torque converter clutch solenoid valve, AT-157. ☐ Line pressure solenoid valve, AT-172. ☐ Shift solenoid valve A, AT-178. ☐ Shift solenoid valve B, AT-183. ☐ Accelerator pedal position sensor (throttle position sensor), AT-188. ☐ Overrun clutch solenoid valve, AT-194. ☐ Park/neutral position (PNP) & 3rd position switches, closed throttle position signal and wide-open throttle position signal, AT-265. ☐ A/T fluid temperature sensor and TCM power source, AT-199. ☐ Vehicle speed sensor·MTR, AT-206. ☐ CAN communication line, AT-104. ☐ Control unit (RAM), Control unit (ROM), AT-216. ☐ Control unit (EEP ROM), AT-218. ☐ Battery ☐ Others	
	4-2.	Check at idle		AT-71
		☐ Engine Cannot Be Started In P and N Positions, AT-224. ☐ In P Position, Vehicle Moves Forward or Backward When Pushed, AT-226. ☐ In N Position, Vehicle Moves, AT-227. ☐ Large Shock. N → R Position, AT-229. ☐ Vehicle Does Not Creep Backward In R Position, AT-231. ☐ Vehicle Does Not Creep Forward In D, 2nd or 1st Position, AT-234.		

4.	4-3.	Cruise test		AT-74 AT-77
		Part-1		
		☐ Vehicle Cannot Be Started From D_1, AT-237. ☐ A/T Does Not Shift: $D_1 \rightarrow D_2$ or Does Not Kickdown: $D_4 \rightarrow D_2$, AT-240. ☐ A/T Does Not Shift: $D_2 \rightarrow D_3$, AT-243. ☐ A/T Does Not Shift: $D_3 \rightarrow D_4$, AT-246. ☐ A/T Does Not Perform Lock-up, AT-249. ☐ A/T Does Not Hold Lock-up Condition, AT-251. ☐ Lock-up Is Not Released, AT-253. ☐ Engine Speed Does Not Return To Idle (Light Braking $D_4 \rightarrow D_3$), AT-254.		
		Part-2		AT-81
		☐ Vehicle Does Not Start From D_1, AT-257. ☐ A/T Does Not Shift: $D_1 \rightarrow D_2$ or Does Not Kickdown: $D_4 \rightarrow D_2$, AT-240. ☐ A/T Does Not Shift: $D_2 \rightarrow D_3$, AT-243. ☐ A/T Does Not Shift: $D_3 \rightarrow D_4$, AT-246.		
		Part-3		AT-83
		☐ A/T Does Not Shift: $D_4 \rightarrow D_3$ When selector lever is set in D → 3rd Position, AT-258. ☐ Engine Speed Does Not Return To Idle (Engine Brake In D_3), AT-254. ☐ A/T Does Not Shift: $D_3 \rightarrow 2_2$, When Selector Lever D → 2nd Position, AT-259. ☐ Engine Speed Does Not Return To Idle (Engine Brake In 2_2), AT-254. ☐ A/T Does Not Shift: $2_2 \rightarrow 1_1$, When Selector Lever 2nd → 1st Position, AT-260. ☐ Vehicle Does Not Decelerate By Engine Brake, AT-263. ☐ SELF-DIAGNOSTIC PROCEDURE — Mark detected items.		
			☐ Park/neutral position (PNP) switch, AT-108. ☐ A/T fluid temperature sensor, AT-114. ☐ Vehicle speed sensor·A/T (Revolution sensor), AT-120. ☐ Engine speed signal, AT-125. ☐ Power train revolution sensor, AT-211. ☐ Torque converter clutch solenoid valve, AT-157. ☐ Line pressure solenoid valve, AT-172. ☐ Shift solenoid valve A, AT-178. ☐ Shift solenoid valve B, AT-183. ☐ Accelerator pedal position sensor (throttle position sensor), AT-188. ☐ Overrun clutch solenoid valve, AT-194. ☐ Park/neutral position (PNP) & 3rd position switches, closed throttle position signal and wide-open throttle position signal, AT-265. ☐ A/T fluid temperature sensor and TCM power source, AT-199. ☐ Vehicle speed sensor·MTR, AT-206. ☐ CAN communication line, AT-104. ☐ Control unit (RAM), Control unit (ROM), AT-216. ☐ Control unit (EEP ROM), AT-218. ☐ Battery ☐ Others	
5.	☐ For self-diagnosis NG items, inspect each component. Repair or replace the damaged parts.			AT-42
6.	☐ Perform all ROAD TEST and re-mark required procedures.			AT-69
7.	☐ Perform DTC CONFIRMATION PROCEDURE for following MIL indicating items and check out NG items. Refer to EC-75, "Emission-related Diagnostic Information".			EC-75
		☐ DTC (P0731) A/T 1st gear function, AT-130. ☐ DTC (P0732) A/T 2nd gear function, AT-136. ☐ DTC (P0733) A/T 3rd gear function, AT-142. ☐ DTC (P0734) A/T 4th gear function, AT-148. ☐ DTC (P0744) A/T TCC S/V function (lock-up), AT-162.		
8.	☐ Perform the Diagnostic Procedures for all remaining items marked NG. Repair or replace the damaged parts. Refer to the Symptom Chart when you perform the procedures. (The chart also shows some other possible symptoms and the component inspection orders.)			AT-87 AT-98
9.	☐ Erase DTC from TCM and ECM memories.			AT-38

Work Flow

NHAT0025

HOW TO PERFORM TROUBLE DIAGNOSES FOR QUICK AND ACCURATE REPAIR

NHAT0025S01

A good understanding of the malfunction conditions can make troubleshooting faster and more accurate.
In general, each customer feels differently about a problem. It is important to fully understand the symptoms or conditions for a customer complaint.
Make good use of the two sheets provided, “Information from Customer” (AT-59) and “Diagnostic Worksheet” (AT-60), to perform the best troubleshooting possible.

WORK FLOW CHART

=NHAT0025S02

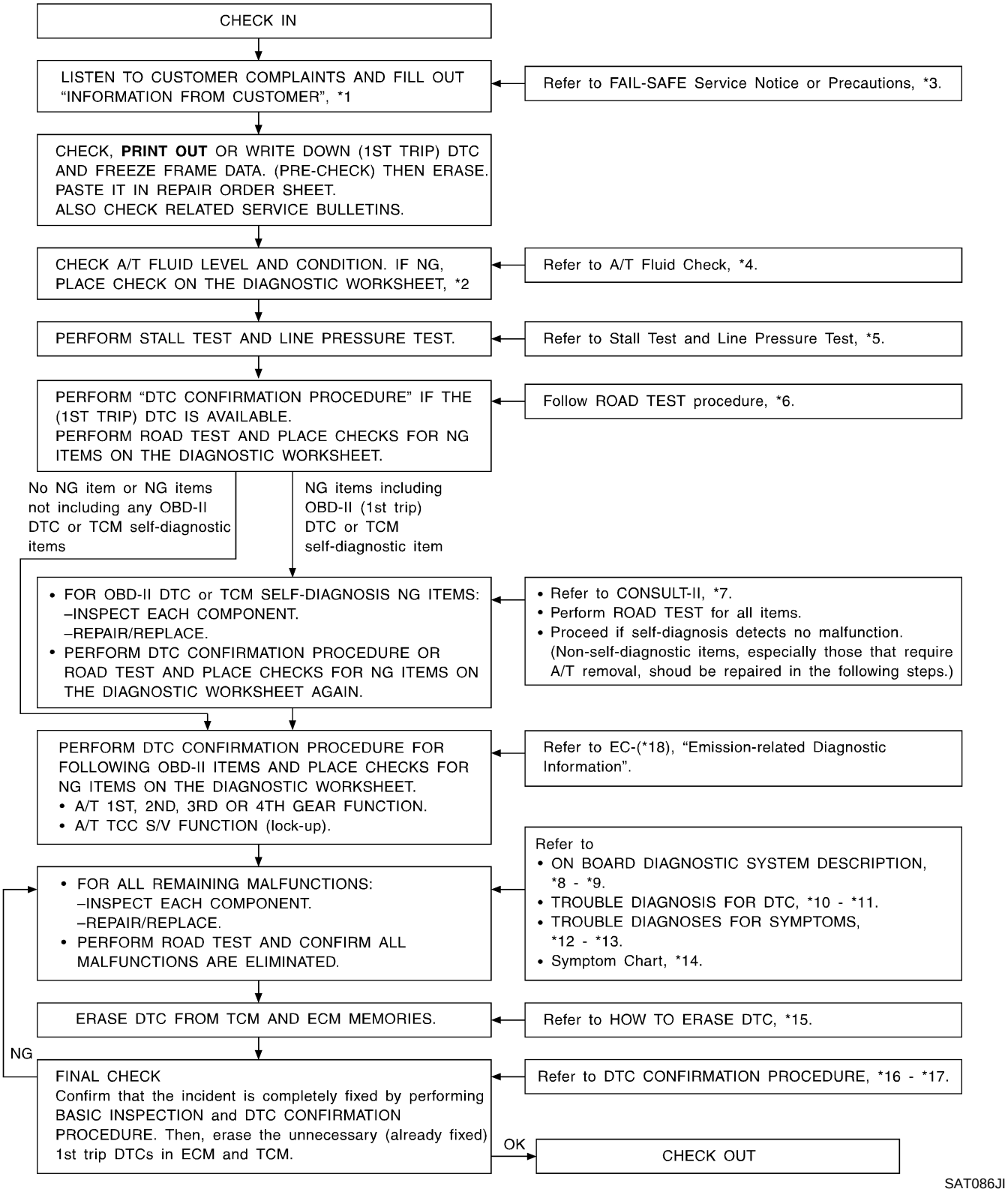

SAT086JI

*1: AT-59
*2: AT-60
*3: AT-9
*4: AT-64
*5: AT-64, 68
*6: AT-69
*7: AT-40
*8: AT-36
*9: AT-55
*10: AT-108
*11: AT-218
*12: AT-220
*13: AT-265
*14: AT-87
*15: AT-38
*16: AT-109
*17: AT-218
*18: EC-75

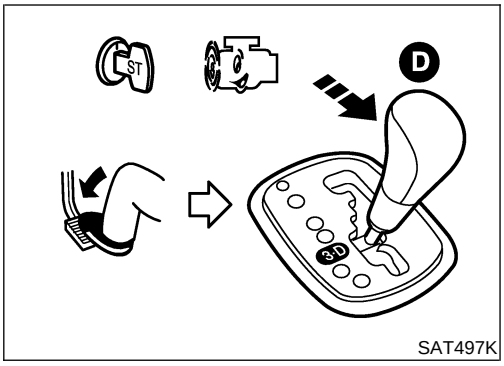

SAT497K

A/T Fluid Check

NHAT0026

FLUID LEAKAGE CHECK

NHAT0026S01

1. Clean area suspected of leaking. — for example, mating surface of converter housing and transmission case.
2. Start engine, apply foot brake, place selector lever in D position and wait a few minutes.
3. Stop engine.

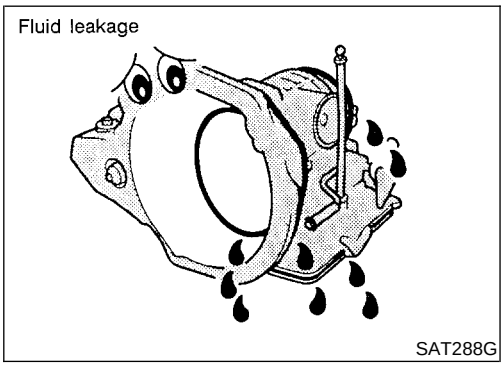

SAT288G

4. Check for fresh leakage.

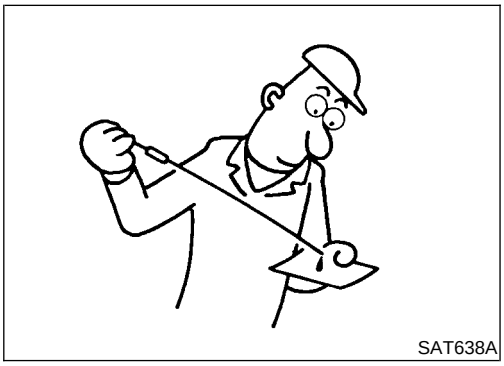
SAT638A

FLUID CONDITION CHECK

NHAT0026S02

Fluid color	Suspected problem
Dark or black with burned odor	Wear of frictional material
Milky pink	Water contamination — Road water entering through filler tube or breather
Varnished fluid, light to dark brown and tacky	Oxidation — Over or under filling, — Overheating

FLUID LEVEL CHECK

NHAT0026S03

Refer to MA-20, “Checking A/T Fluid”.

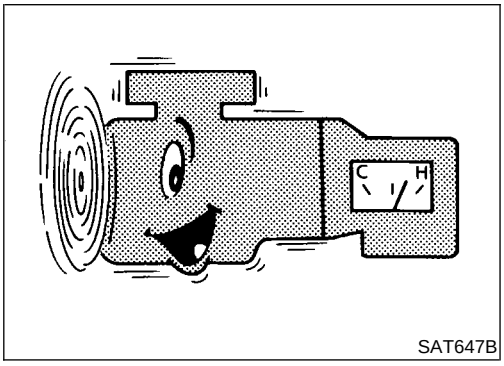

SAT647B

Stall Test

NHAT0027

STALL TEST PROCEDURE

NHAT0027S01

1. Check A/T fluid and engine oil levels. If necessary, add fluid and oil.
2. Drive vehicle for approx. 10 minutes or until fluid and oil reach operating temperature.

   ATF operating temperature:
   50 - 80°C (122 - 176°F)

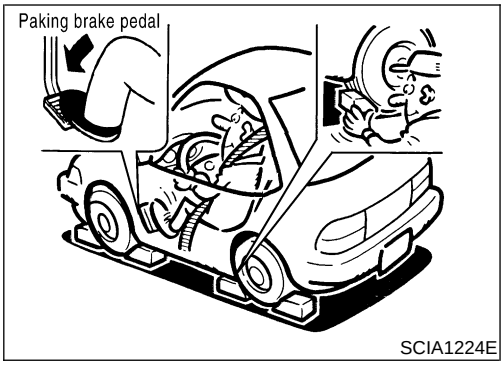

SCIA1224E

3. Set parking brake and block wheels.
4. Install a tachometer where it can be seen by driver during test.
- **It is good practice to mark the point of specified engine rpm on indicator.**

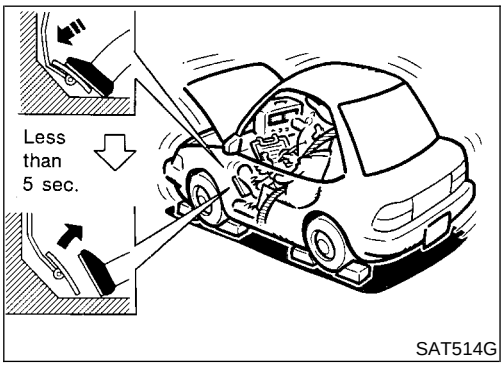

SAT514G

5. Start engine, apply foot brake, and place selector lever in D position.
6. Accelerate to wide open throttle gradually while applying foot brake.
7. Quickly note the engine stall revolution and immediately release throttle.
- **During test, never hold throttle wide open for more than 5 seconds.**

Stall revolution:
2,550 - 3,050 rpm

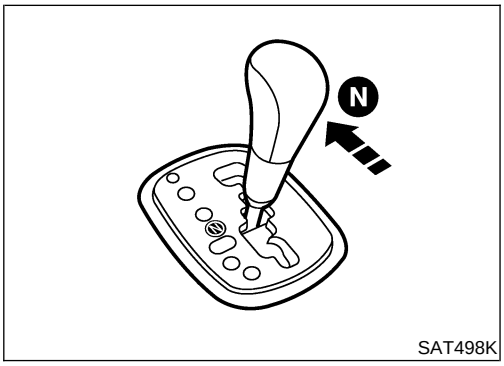

SAT498K

8. Move selector lever to N position.
9. Cool off ATF.
- **Run engine at idle for at least one minute.**
10. Repeat steps 5 through 9 with selector lever in 2nd , 1st and R positions.

JUDGEMENT OF STALL TEST

NHAT0027S02

The test result and possible damaged components relating to each result are shown in the illustrations on next page.
In order to pinpoint the possible damaged components, follow the "WORK FLOW CHART" shown in AT-63.

NOTE:
Stall revolution is too high in D, 3rd, 2nd or 1st position:
- Slippage occurs in 1st gear but not in 2nd and 3rd gears. ..... Low one-way clutch slippage
- Slippage occurs in the following gears:
  1st through 3rd gears in D position and engine brake functions with selector lever set to 3rd position.
  1st and 2nd gears in 2nd position and engine brake functions with accelerator pedal released (fully closed throttle). ..... Forward clutch or forward one-way clutch slippage

Stall revolution is too high in R position:
- Engine brake does not function in 1st position. ..... Low & reverse brake slippage
- Engine brake functions in 1st position. ..... Reverse clutch slippage

Stall revolution within specifications:
- Vehicle does not achieve speed of more than 80 km/h (50

MPH). ..... One-way clutch seizure in torque converter housing

CAUTION:
Be careful since automatic fluid temperature increases abnormally.

- Slippage occurs in 3rd and 4th gears in D position. ..... High clutch slippage
- Slippage occurs in 2nd and 4th gear in D position. ..... Brake band slippage
- Engine brake does not function in 2nd and 3rd gears in D position with 3rd position switch set to ON, 2nd gear in 2nd position, and 1st gear in 1st position. ..... Overrun clutch slippage

Stall revolution less than specifications:

- Poor acceleration during starts. ..... One-way clutch slippage in torque converter

Selector lever position	Judgement		
D	H	O	L
2	H	O	L
1	H	O	L
R	O	H	L

O : Stall revolution is normal.
H : Stall revolution is higher than specified.
L : Stall revolution is lower than specified.

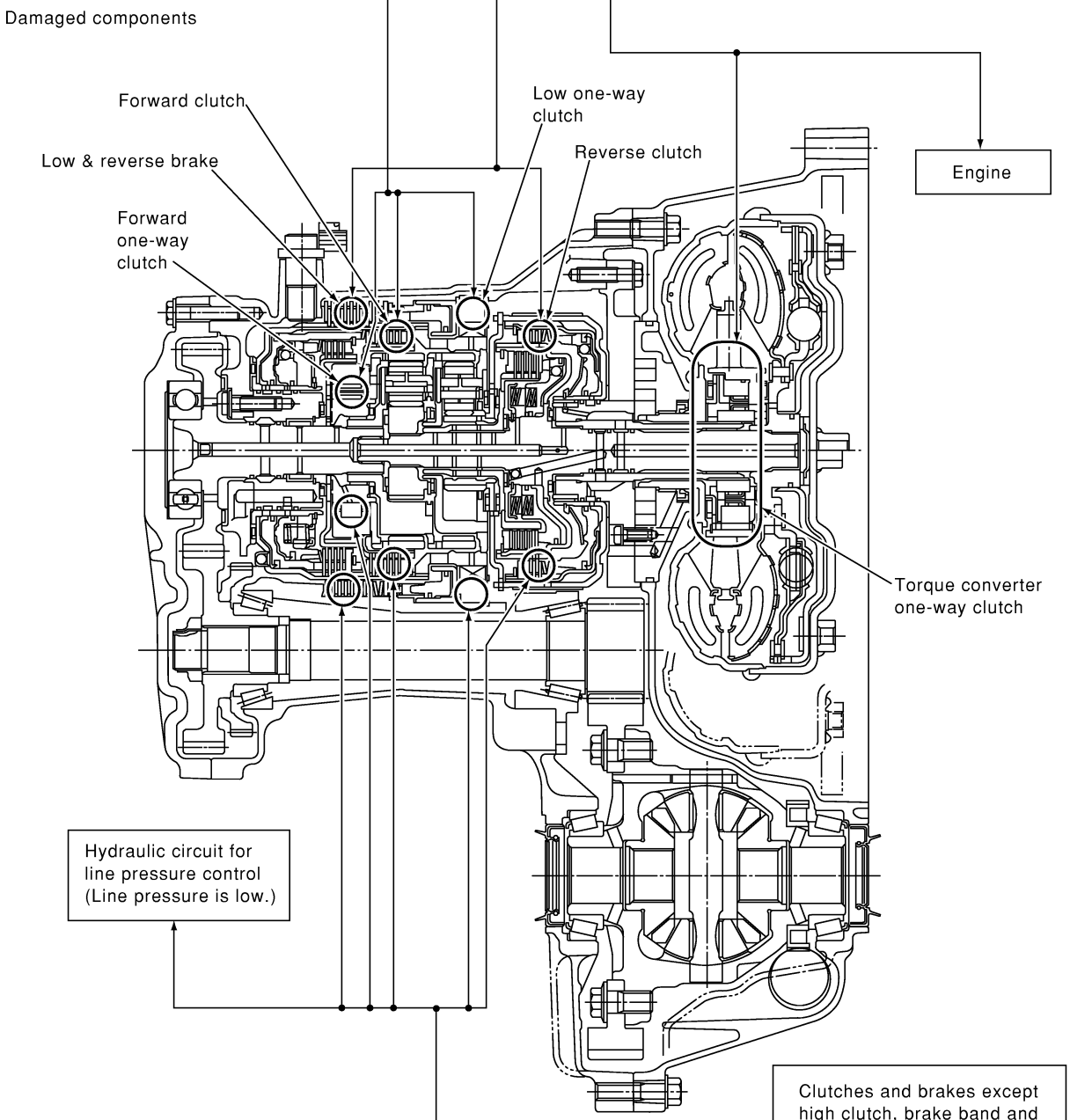

Selector lever position	Judgement	
D	H	O
2	H	O
1	H	O
R	H	O

SAT499K

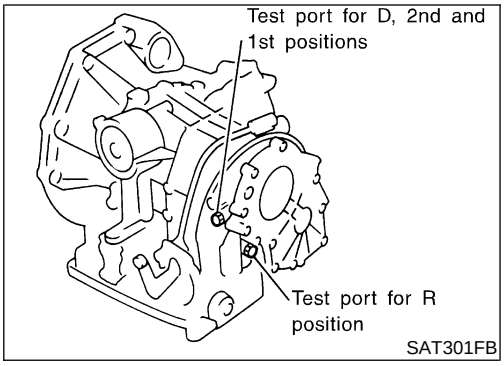

SAT301FB

Line Pressure Test

NHAT0028

LINE PRESSURE TEST PORTS

NHAT0028S01

Location of line pressure test ports are shown in the illustration.

- **Always replace pressure plugs as they are self-sealing bolts.**

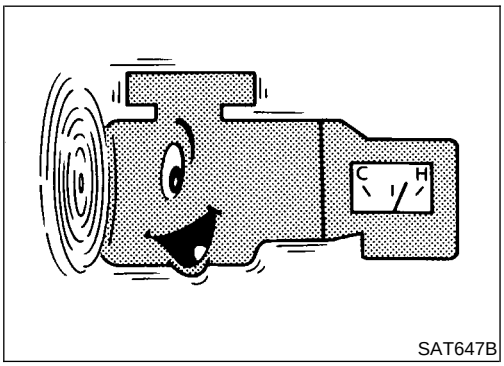

SAT647B

LINE PRESSURE TEST PROCEDURE

NHAT0028S02

1. Check A/T fluid and engine oil levels. If necessary, add fluid and oil.
2. Drive vehicle for approx. 10 minutes or until fluid and oil reach operating temperature.

   ATF operating temperature:
   50 - 80°C (122 - 176°F)

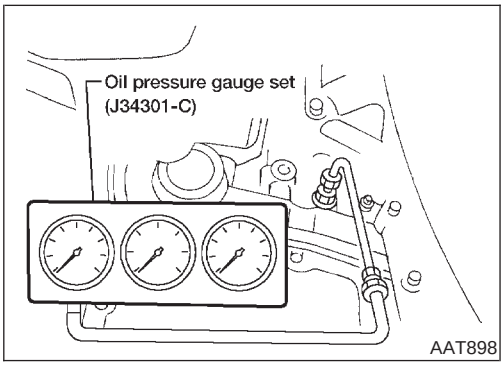

AAT898

3. Install pressure gauge to corresponding line pressure port.

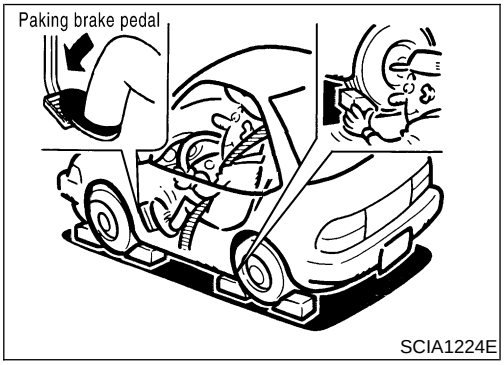

SCIA1224E

4. Set parking brake and block wheels.

- **Continue to depress brake pedal fully while line pressure test is being performed at stall speed.**

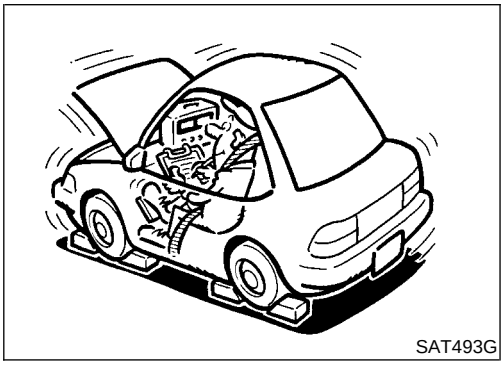
SAT493G

5. Start engine and measure line pressure at idle and stall speed.

- **When measuring line pressure at stall speed, follow the stall test procedure.**

  Line pressure: Refer to SDS, AT-382.

JUDGEMENT OF LINE PRESSURE TEST

NHAT0028S03

Judgement		Suspected parts
At idle	Line pressure is low in all positions.	• Oil pump wear • Control piston damage • Pressure regulator valve or plug sticking • Spring for pressure regulator valve damaged • Fluid pressure leakage between oil strainer and pressure regulator valve • Clogged strainer
	Line pressure is low in particular position.	• Fluid pressure leakage between manual valve and particular clutch • For example, line pressure is: − Low in R and 1st positions, but − Normal in D and 2nd positions. Therefore, fluid leakage exists at or around low and reverse brake circuit. Refer to "CLUTCH AND BAND CHART", AT-20.
	Line pressure is high.	• Maladjustment of accelerator pedal position sensor (throttle position sensor) • A/T fluid temperature sensor damaged • Line pressure solenoid valve sticking • Short circuit of line pressure solenoid valve circuit • Pressure modifier valve sticking • Pressure regulator valve or plug sticking • Open in dropping resistor circuit
At stall speed	Line pressure is low.	• Maladjustment of accelerator pedal position sensor (throttle position sensor) • Line pressure solenoid valve sticking • Short circuit of line pressure solenoid valve circuit • Pressure regulator valve or plug sticking • Pressure modifier valve sticking • Pilot valve sticking

ROAD TEST PROCEDURE

1. Check before engine is started.
2. Check at idle.
3. Cruise test.

SAT786A

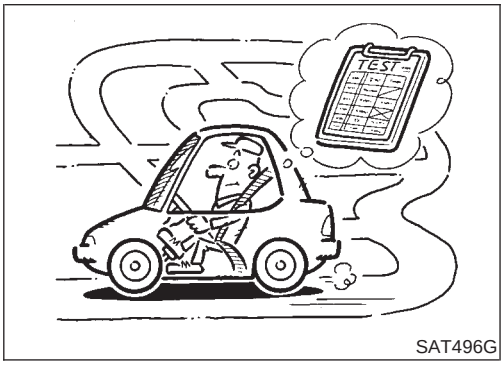

SAT496G

Road Test

NHAT0029

DESCRIPTION

NHAT0029S01

- The purpose of the test is to determine overall performance of A/T and analyze causes of problems.
- The road test consists of the following three parts:

1. Check before engine is started
2. Check at idle
3. Cruise test

- Before road test, familiarize yourself with all test procedures and items to check.
- Conduct tests on all items until specified symptom is found. Troubleshoot items which check out No Good after road test. Refer to "ON BOARD DIAGNOSTIC SYSTEM DESCRIPTION" and "TROUBLE DIAGNOSES FOR SYMPTOMS", AT-36 to AT-55 and AT-220 to AT-265.

1. CHECK BEFORE ENGINE IS STARTED

=NHAT0029S02

1	CHECK A/T CHECK INDICATOR LAMP

1. Park vehicle on flat surface.
2. Move selector lever to P position.

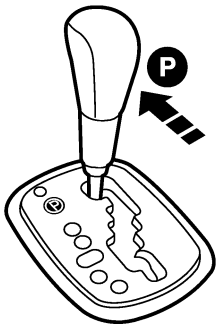

SAT491K

3. Turn ignition switch to OFF position. Wait at least 5 seconds.
4. Turn ignition switch to ON position. (Do not start engine.)
5. Does A/T CHECK indicator lamp come on for about 2 seconds?

Yes or No

Yes	▶	GO TO 2.
No	▶	Stop ROAD TEST. Go to "A/T CHECK Indicator Lamp Does Not Come On", AT-222.

2	CHECK A/T CHECK INDICATOR LAMP

Does A/T CHECK indicator lamp flicker for about 8 seconds?

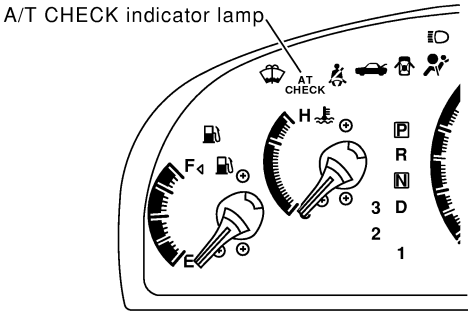

SAT604K

Yes or No

Yes	▶	TCM is under Fail-safe mode. Perform self-diagnosis and check NG items on the DIAGNOSTIC WORKSHEET, AT-59. Refer to SELF-DIAGNOSTIC PROCEDURE (WITH CONSULT-II), AT-41, or TCM SELF-DIAGNOSTIC PROCEDURE (NO TOOLS), AT-52.
No	▶	1. Turn ignition switch to OFF position. 2. Perform self-diagnosis and note NG items. Refer to SELF-DIAGNOSTIC PROCEDURE (WITH CONSULT-II), AT-41, TCM SELF-DIAGNOSTIC PROCEDURE (NO TOOLS), AT-52. 3. Go to "2. CHECK AT IDLE", AT-71.

2. CHECK AT IDLE

NHAT0029S03

1	CHECK ENGINE START

1. Park vehicle on flat surface.
2. Move selector lever to P or N position.

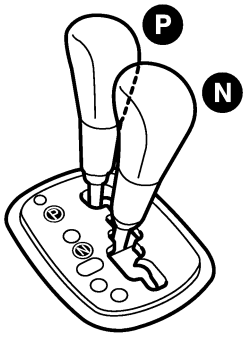

SAT502K

3. Turn ignition switch to OFF position.
4. Turn ignition switch to START position.
5. Is engine started?

Yes or No

Yes	▶	GO TO 2.
No	▶	Stop ROAD TEST. Mark the box on the DIAGNOSTIC WORKSHEET. Go to "Engine Cannot Be Started In P and N Position", AT-224.

2	CHECK ENGINE START

1. Turn ignition switch to ON position.
2. Move selector lever to D, 1st, 2nd or R position.

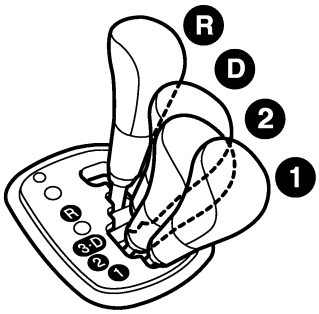

SAT503K

3. Turn ignition switch to START position.
4. Is engine started?

Yes or No

Yes	▶	Stop ROAD TEST. Mark the box on the DIAGNOSTIC WORKSHEET. Go to "Engine Cannot Be Started In P and N Position", AT-224.
No	▶	GO TO 3.

3	CHECK VEHICLE MOVE

1. Move selector lever to P position.

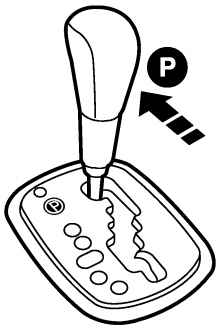

SAT491K

2. Turn ignition switch to OFF position.
3. Release parking brake.
4. Push vehicle forward or backward.

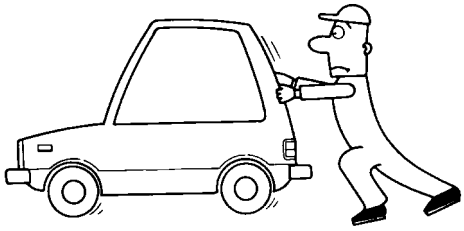

SAT796A

5. Does vehicle move when it is pushed forward or backward?
6. Apply parking brake.

Yes or No

Yes	▶	Mark the box of "In P Position, Vehicle Moves Forward Or Backward When Pushed" on the DIAGNOSTIC WORKSHEET. Continue ROAD TEST.
No	▶	GO TO 4.

4	CHECK VEHICLE MOVE

1. Start engine.
2. Move selector lever to N position.

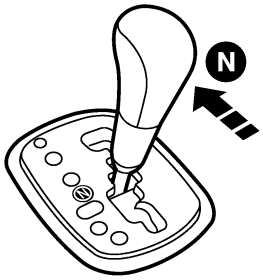

SAT498K

3. Release parking brake.
4. Does vehicle move forward or backward?

Yes or No

Yes	▶	Mark the box of "In N Position, Vehicle Moves" on the DIAGNOSTIC WORKSHEET. Continue ROAD TEST.
No	▶	GO TO 5.

5	CHECK SHIFT SHOCK

1. Apply foot brake.

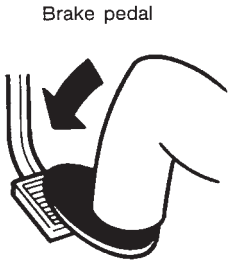

SAT797A

2. Move selector lever to R position.

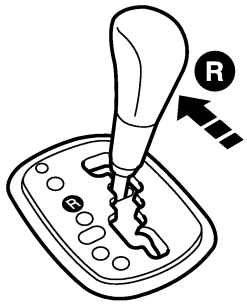

SAT506K

3. Is there large shock when changing from N to R position?

Yes or No

Yes	▶	Mark the box of "Large Shock N → R Position" on the DIAGNOSTIC WORKSHEET. Continue ROAD TEST.
No	▶	GO TO 6.

6	CHECK VEHICLE MOVE

1. Release foot brake for several seconds.

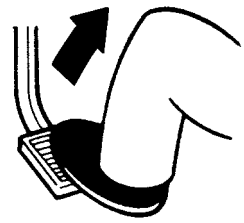

SAT799A

2. Does vehicle creep backward when foot brake is released?

Yes or No

Yes	▶	GO TO 7.
No	▶	Mark the box of "Vehicle Does Not Creep Backward In R Position" on the DIAGNOSTIC WORKSHEET. Continue ROAD TEST.

7	CHECK VEHICLE MOVE

1. Move selector lever to D, 2nd and 1st positions and check if vehicle creeps forward.

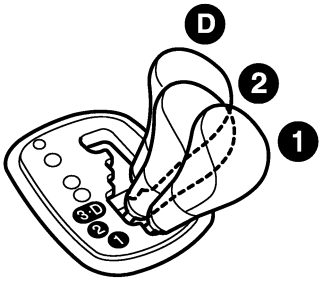

SAT507K

2. Does vehicle creep forward in all three positions?

Yes or No

Yes	▶	Go to 3. CRUISE TEST, AT-74.
No	▶	Mark the box of "Vehicle Does Not Creep Forward In D, 2nd Or 1st Position" on the DIAGNOSTIC WORKSHEET. Continue ROAD TEST.

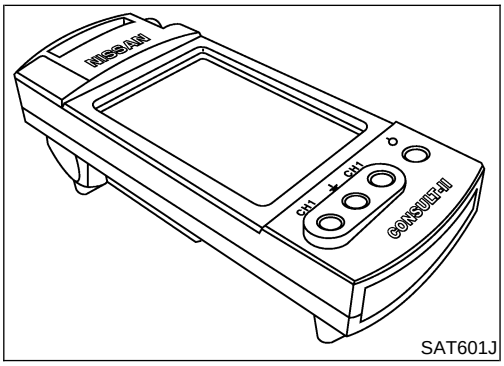

SAT601J

3. CRUISE TEST

NHAT0029S04

- Check all items listed in Parts 1 through 3.

With CONSULT-II

NHAT0029S0401

- Using CONSULT-II, conduct a cruise test and record the result.
- Print the result and ensure that shifts and lock-ups take place as per Shift Schedule.

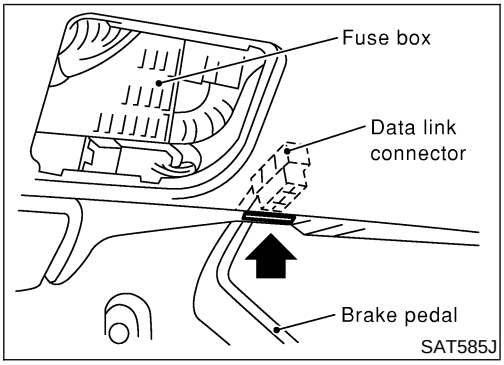

SAT585J

CONSULT-II Setting Procedure

NHAT0029S0402

1. Turn ignition switch OFF.
2. Connect CONSULT-II and CONSULT-II CONVERTER to data link connector, which is located in left side dash panel.

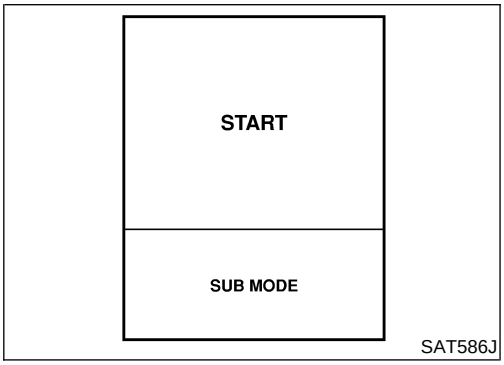

SAT586J

3. Turn ignition switch ON.
4. Touch "START".

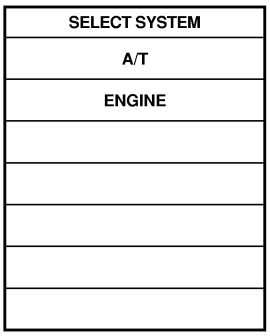

SAT014K

5. Touch "A/T". If "A/T" is not indicated, go to GI-42, "CONSULT-II Data Link Connector (DLC) Circuit".

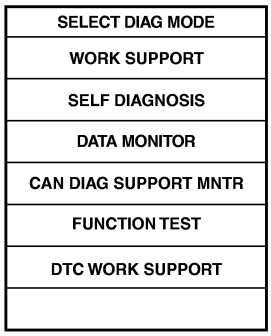

SAT860K

6. Touch "DATA MONITOR".

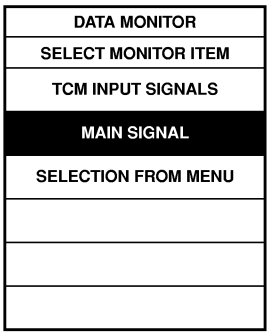

SAT175K

7. Touch "MAIN SIGNALS" or "TCM INPUT SIGNALS".
8. See "Numerical Display", "Barchart Display" or "Line Graph Display".

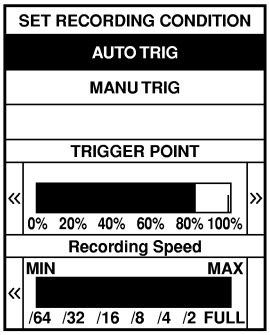

SAT973J

9. Touch "SETTING" to set recording condition ("AUTO TRIG" or "MANU TRIG") and touch "BACK".
10. Touch "Start".

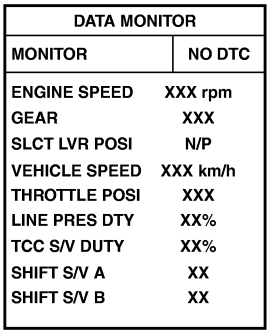

SAT134K

11. When performing cruise test, touch "RECORD".

DATA MONITOR		
Recording Data	X%	DTC DETECTED
ENGINE SPEED	XXX rpm	
GEAR	XXX	
SLCT LVR POSI	N/P	
VEHICLE SPEED	XXX km/h	
THROTTLE POSI	XXX	
LINE PRES DTY	XX%	
TCC S/V DUTY	XX%	
SHIFT S/V A	XX	
SHIFT S/V B	XX	

SAT135K

12. After finishing cruise test part 1, touch "STOP".

REAL-TIME DIAG
ENG SPEED SIG

SAT987J

13. Touch "STORE" and touch "BACK".

STORE	
SYSTEM	SAVE REC DATA

SAT974J

Trigger	VHCL S/SEN A/T	VHCL S/SEN MTR	THRTL POSI SEN
	km/h	km/h	V

SAT975J

14. Touch "DISPLAY".
15. Touch "PRINT".
16. Check the monitor data printed out.
17. Continue cruise test part 2 and 3.

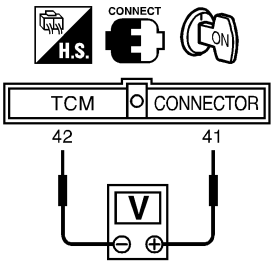

SAT331JB

Without CONSULT-II

NHAT0029S0403

- Accelerator pedal position sensor can be checked by voltage between terminals 41 (W) and 42 (B) of TCM.

Cruise Test — Part 1

=NHAT0029S0404

1	CHECK STARTING GEAR (D_1) POSITION

1. Drive vehicle for approx. 10 minutes to warm engine oil and ATF up to operating temperature.
   ATF operating temperature:
   50 - 80°C (122 - 176°F)
2. Park vehicle on flat surface.
3. Set selector lever is in D position.
4. Move selector lever to P position.

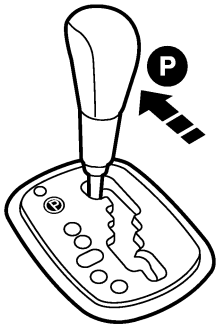

SAT491K

5. Start engine.
6. Move selector lever to D position.

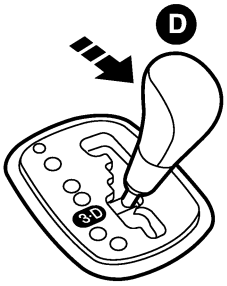

SAT493K

7. Accelerate vehicle by constantly depressing accelerator pedal half-way.

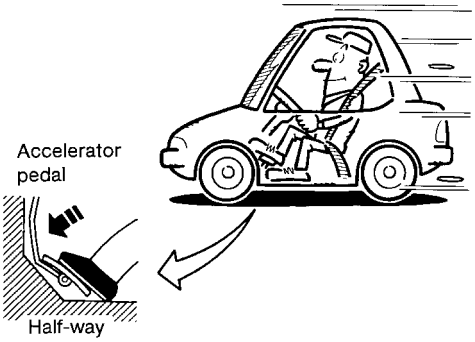

SAT495G

8. Does vehicle start from D_1?
   Read gear position.

Yes or No

Yes	▶	GO TO 2.
No	▶	Mark the box of "Vehicle Cannot Be Started From D_1" on the DIAGNOSTIC WORK-SHEET. Continue ROAD TEST.

2	CHECK SHIFT UP (D_1 TO D_2)

Does A/T shift from D_1 to D_2 at the specified speed?

Read gear position, throttle opening and vehicle speed.

Specified speed when shifting from D_1 to D_2:

Refer to Shift schedule, AT-381.

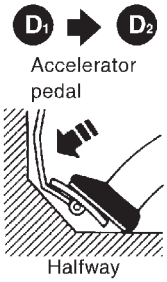

SAT954I

Yes or No

Yes	▶	GO TO 3.
No	▶	Mark the box of "A/T Does Not Shift: $D_1 \rightarrow D_2$ Or Does Not Kickdown: $D_4 \rightarrow D_2$" on the DIAGNOSTIC WORKSHEET. Continue ROAD TEST.

3	CHECK SHIFT UP (D_2 TO D_3)

Does A/T shift from D_2 to D_3 at the specified speed?

Read gear position, throttle position and vehicle speed.

Specified speed when shifting from D_2 to D_3:

Refer to Shift schedule, AT-381.

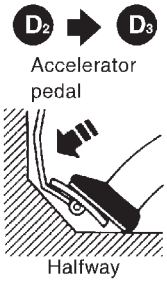

SAT955I

Yes or No

Yes	▶	GO TO 4.
No	▶	Mark the box of "A/T Does Not Shift: $D_2 \rightarrow D_3$" on the DIAGNOSTIC WORKSHEET. Continue ROAD TEST.

4	CHECK SHIFT UP (D_3 TO D_4)

Does A/T shift from D_3 to D_4 at the specified speed?

Read gear position, throttle position and vehicle speed.

Specified speed when shifting from D_3 to D_4:

Refer to shift schedule, AT-381.

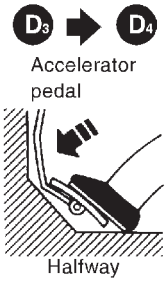

SAT956I

Yes or No

Yes	▶	GO TO 5.
No	▶	Mark the box of "A/T Does Not Shift: $D_3 \rightarrow D_4$" on the DIAGNOSTIC WORKSHEET. Continue ROAD TEST.

5	CHECK LOCK-UP (D_4 TO D_4L/U)

Does A/T perform lock-up at the specified speed?

Read vehicle speed, throttle position when lock-up duty becomes 94%.

Specified speed when lock-up occurs:

Refer to Shift schedule, AT-381.

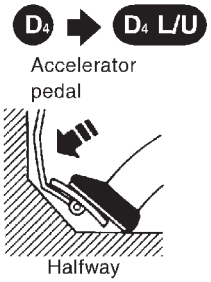

SAT957I

Yes or No

Yes	▶	GO TO 6.
No	▶	Mark the box of "A/T Does Not Perform Lock-up" on the DIAGNOSTIC WORKSHEET. Continue ROAD TEST.

6	CHECK HOLD LOCK-UP

Does A/T hold lock-up condition for more than 30 seconds?

Yes or No

Yes	▶	GO TO 7.
No	▶	Mark the box of "A/T Does Not Hold Lock-up Condition" on the DIAGNOSTIC WORKSHEET. Continue ROAD TEST.

7	CHECK SHIFT DOWN (D_4L/U TO D_4)

1. Release accelerator pedal.

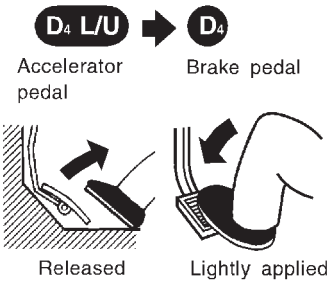

SAT958I

2. Is lock-up released when accelerator pedal is released?

Yes or No

Yes	▶	GO TO 8.
No	▶	Mark the box of "Lock-up Is Not Released" on the DIAGNOSTIC WORKSHEET. Continue ROAD TEST.

8	CHECK SHIFT DOWN (D_4 TO D_3)

1. Decelerate vehicle by applying foot brake lightly.

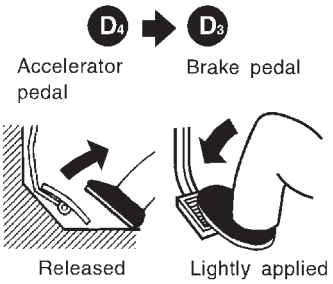

SAT959I

2. Does engine speed return to idle smoothly when A/T is shifted from D_4 to D_3?
   Read gear position and engine speed.

Yes or No

Yes	▶	1. Stop vehicle. 2. Go to "Cruise Test — Part 2", AT-81.
No	▶	Mark the box of "Engine Speed Does Not Return To Idle (Light Braking $D_4 \rightarrow D_3$)" on the DIAGNOSTIC WORKSHEET. Continue ROAD TEST.

Cruise Test — Part 2

=NHAT0029S0405

1	CHECK STARTING GEAR (D_1) POSITION

1. Confirm selector lever is in D position.
2. Accelerate vehicle by half throttle again.

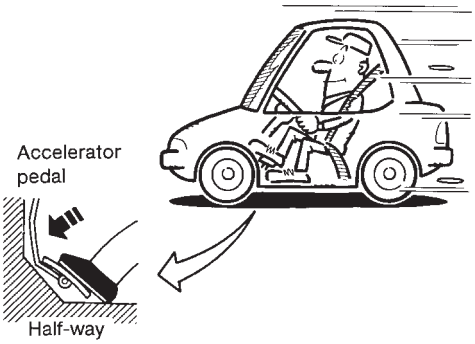

SAT495G

3. Does vehicle start from D_1?
   Read gear position.

Yes or No

Yes	▶	GO TO 2.
No	▶	Mark the box of "Vehicle Does Not Start From D_1" on the DIAGNOSTIC WORKSHEET. Continue ROAD TEST.

2	CHECK SHIFT UP AND SHIFT DOWN (D_3 TO D_4 TO D_2)

1. Accelerate vehicle to 80 km/h (50 MPH) as shown in illustration.
2. Release accelerator pedal and then quickly depress it fully.

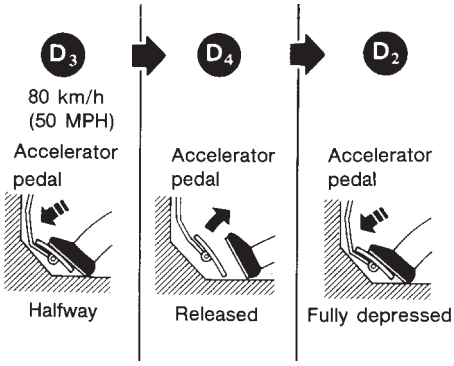

SAT404H

3. Does A/T shift from D_4 to D_2 as soon as accelerator pedal is depressed fully?
   Read gear position and throttle position.

Yes or No

Yes	▶	GO TO 3.
No	▶	Mark the box of "A/T Does Not Shift: $D_1 \rightarrow D_2$ Or Does Not Kickdown: $D_4 \rightarrow D_2$" on the DIAGNOSTIC WORKSHEET. Continue ROAD TEST.

3	CHECK SHIFT UP (D_2 TO D_3)

Does A/T shift from D_2 to D_3 at the specified speed?

Read gear position, throttle position and vehicle speed.

Specified speed when shifting from D_2 to D_3:

Refer to Shift schedule, AT-381.

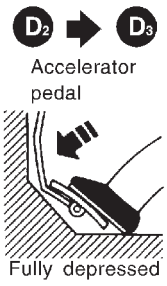

SAT960I

Yes or No

Yes	▶	GO TO 4.
No	▶	Mark the box of "A/T Does Not Shift: $D_2 \rightarrow D_3$" on the DIAGNOSTIC WORKSHEET. Continue ROAD TEST.

4	CHECK SHIFT UP (D_3 TO D_4) AND ENGINE BRAKE

Release accelerator pedal after shifting from D_2 to D_3.

Does A/T shift from D_3 to D_4 and does vehicle decelerate by engine brake?

Read gear position, throttle position and vehicle speed.

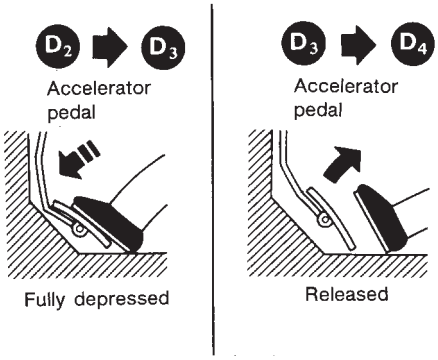

SAT405H

Yes or No

Yes	▶	1. Stop vehicle. 2. Go to "CRUISE TEST — Part 3", AT-83.
No	▶	Mark the box of "A/T Does Not Shift: $D_3 \rightarrow D_4$" on the DIAGNOSTIC WORKSHEET. Continue ROAD TEST.

Cruise Test — Part 3

=NHAT0029S0406

1	VEHICLE SPEED (D_4) POSITION

1. Confirm selector lever is in D position.
2. Accelerate vehicle using half-throttle to D_4.

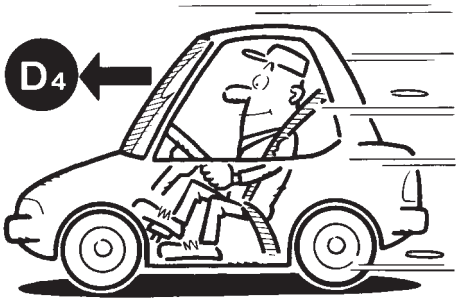

SAT812A

3. Release accelerator pedal.

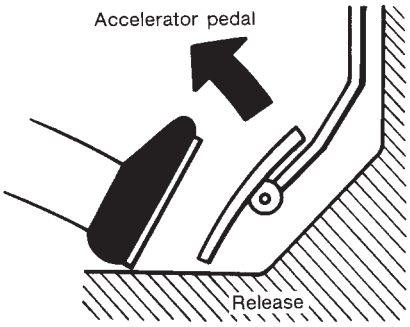

SAT813A

4. Set selector lever sets in 3rd position while driving in D_4.
5. Does A/T shift from D_4 to D_3?

Read gear position and vehicle speed.

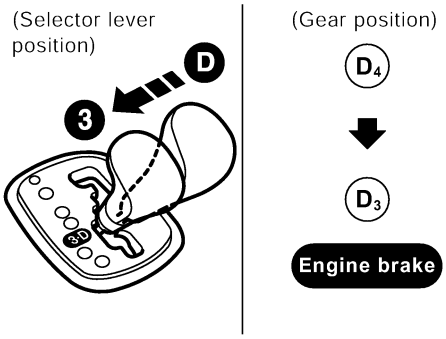

SAT677K

Yes or No

Yes	▶	GO TO 2.
No	▶	Mark the box of "A/T Does Not Shift: $D_4 \rightarrow D_3$, When selector lever D → 3rd position on the DIAGNOSTIC WORKSHEET. Continue ROAD TEST.

2	CHECK ENGINE BRAKE

Does vehicle decelerate by engine brake?

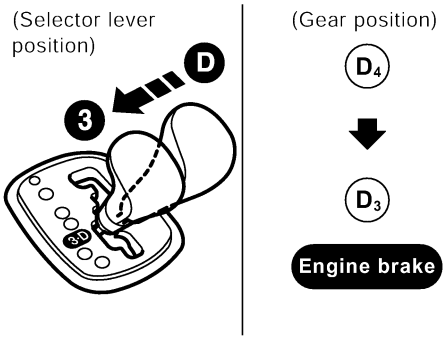

SAT677K

Yes or No

Yes	▶	GO TO 3.
No	▶	Mark the box of "Engine Speed Does Not Return To Idle (Light Braking $D_4 \rightarrow D_3$)" on the DIAGNOSTIC WORKSHEET. Continue ROAD TEST.

3	CHECK SHIFT DOWN (D_3 TO D_2)

1. Move selector lever from 3rd to 2nd position while driving in D_3.
2. Does A/T shift from D_3 to 2_2?
   Read gear position.

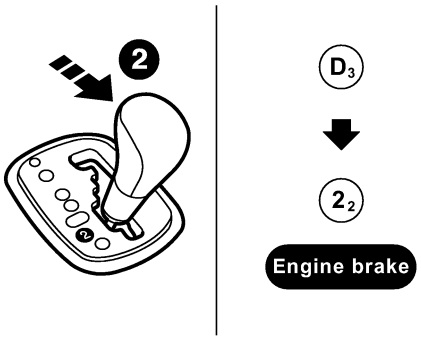

SAT678K

Yes or No

Yes	▶	GO TO 4.
No	▶	Mark the box of "A/T Does Not Shift: $D_3 \rightarrow D_2$, When Selector Lever 3rd → 2nd Position" on the DIAGNOSTIC WORKSHEET. Continue ROAD TEST.

4	CHECK ENGINE BRAKE

Does vehicle decelerate by engine brake?

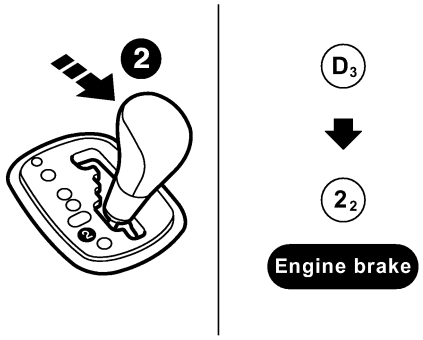

SAT678K

Yes or No

Yes	▶	GO TO 5.
No	▶	Mark the box of "Engine Speed Does Not Return To Idle (Light Braking $D_4 \rightarrow D_3$)" on the DIAGNOSTIC WORKSHEET. Continue ROAD TEST.

5	CHECK SHIFT DOWN (2_2 TO 1_1)

1. Move selector lever from 2nd to 1st position while driving in 2_2.
2. Does A/T shift from 2_2 to 1_1 position?
   Read gear position.

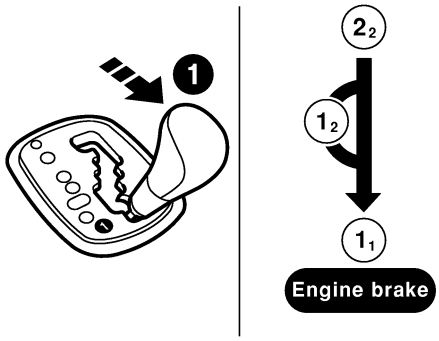

SAT514K

Yes or No

Yes	▶	GO TO 6.
No	▶	Mark the box of "A/T Does Not Shift: $2_2 \rightarrow 1_1$, When Selector Lever 2nd → 1st Position" on the DIAGNOSTIC WORKSHEET. Continue ROAD TEST.

6	CHECK ENGINE BRAKE
Does vehicle decelerate by engine brake?	

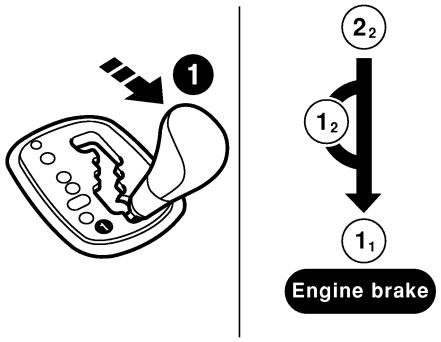

SAT514K

Yes or No

Yes	▶	1. Stop vehicle. 2. Perform self-diagnosis. Refer to TCM Self-diagnostic Procedure (No Tools), AT-52.
No	▶	Mark the box of "Vehicle Does Not Decelerate By Engine Brake" on the DIAGNOSTIC WORKSHEET. Stop ROAD TEST.

Symptom Chart

NHAT0030

Numbers are arranged in order of inspection.
Perform inspections starting with number one and work up.

Items	Symptom	Condition	Diagnostic Item	Reference Page
No Lock-up Engagement/TCC Inoperative	Torque converter is not locked up.	ON vehicle	1. Accelerator pedal position sensor	AT-188
			2. Vehicle speed sensor·A/T (Revolution sensor) and vehicle speed sensor·MTR	AT-120, 206
			3. Engine speed signal	AT-125
			4. A/T fluid temperature sensor	AT-199
			5. Line pressure test	AT-68
			6. Torque converter clutch solenoid valve	AT-157
			7. Control valve assembly	AT-282
		OFF vehicle	8. Torque converter	AT-293
	Torque converter clutch piston slip.	ON vehicle	1. Fluid level	AT-64
			2. Accelerator pedal position sensor	AT-188
			3. Line pressure test	AT-68
			4. Torque converter clutch solenoid valve	AT-157
			5. Line pressure solenoid valve	AT-172
			6. Control valve assembly	AT-282
		OFF vehicle	7. Torque converter	AT-293
	Lock-up point is extremely high or low. AT-249	ON vehicle	1. Accelerator pedal position sensor	AT-188
			2. Vehicle speed sensor·A/T (Revolution sensor) and vehicle speed sensor·MTR	AT-120, 206
			3. Torque converter clutch solenoid valve	AT-157
			4. Control valve assembly	AT-282
Shift Shock	Sharp shock in shifting from N to D position.	ON vehicle	1. Engine idling rpm	EC-58
			2. Accelerator pedal position sensor	AT-188
			3. Line pressure test	AT-68
			4. A/T fluid temperature sensor	AT-199
			5. Engine speed signal	AT-125
			6. Line pressure solenoid valve	AT-172
			7. Control valve assembly	AT-282
			8. Accumulator N-D	AT-282
		OFF vehicle	9. Forward clutch	AT-336

Symptom Chart (Cont'd)

Items	Symptom	Condition	Diagnostic Item	Reference Page
Shift Shock	Too sharp a shock in change from D_1 to D_2.	ON vehicle	1. Accelerator pedal position sensor	AT-188
			2. Line pressure test	AT-68
			3. Accumulator servo release	AT-282
			4. Control valve assembly	AT-282
			5. A/T fluid temperature sensor	AT-199
		OFF vehicle	6. Brake band	AT-341
	Too sharp a shock in change from D_2 to D_3.	ON vehicle	1. Accelerator pedal position sensor	AT-188
			2. Line pressure test	AT-68
			3. Control valve assembly	AT-282
			4. A/T fluid temperature sensor	AT-199
		OFF vehicle	5. High clutch	AT-331
			6. Brake band	AT-353
	Too sharp a shock in change from D_3 to D_4.	ON vehicle	1. Accelerator pedal position sensor	AT-188
			2. Line pressure test	AT-68
			3. Control valve assembly	AT-282
			4. A/F fluid temperature sensor	AT-199
		OFF vehicle	5. Brake band	AT-353
			6. Overrun clutch	AT-336
			7. Forward one-way clutch	AT-344
	Gear change shock felt during deceleration by releasing accelerator pedal.	ON vehicle	1. Accelerator pedal position sensor	AT-188
			2. Line pressure test	AT-68
			3. Overrun clutch solenoid valve	AT-194
			4. Control valve assembly	AT-282
	Large shock changing from 1_2 to 1_1 in 1st position.	ON vehicle	1. Control valve assembly	AT-282
		OFF vehicle	2. Low & reverse brake	AT-341
Improper Shift Timing	Too high a gear change point from D_1 to D_2, from D_2 to D_3, from D_3 to D_4. AT-240, 243, 246	ON vehicle	1. Accelerator pedal position sensor	AT-188
			2. Vehicle speed sensor·A/T (Revolution sensor) and vehicle speed sensor·MTR	AT-120, 206
			3. Shift solenoid valve A	AT-178
			4. Shift solenoid valve B	AT-183
	Gear change directly from D_1 to D_3 occurs.	ON vehicle	1. Fluid level	AT-64
			2. Accumulator servo release	AT-282
		OFF vehicle	3. Brake band	AT-353

Symptom Chart (Cont'd)

Items	Symptom	Condition	Diagnostic Item	Reference Page
Improper Shift Timing	Too high a change point from D_4 to D_3, from D_3 to D_2, from D_2 to D_1.	ON vehicle	1. Accelerator pedal position sensor	AT-188
			2. Vehicle speed sensor·A/T (Revolution sensor) and vehicle speed sensor·MTR	AT-120, 206
	Kickdown does not operate when depressing pedal in D_4 within kick-down vehicle speed.	ON vehicle	1. Accelerator pedal position sensor	AT-188
			2. Vehicle speed sensor·A/T (Revolution sensor) and vehicle speed sensor·MTR	AT-120, 206
			3. Shift solenoid valve A	AT-178
			4. Shift solenoid valve B	AT-183
	Kickdown operates or engine overruns when depressing pedal in D_4 beyond kick-down vehicle speed limit.	ON vehicle	1. Vehicle speed sensor·A/T (Revolution sensor) and vehicle speed sensor·MTR	AT-120, 206
			2. Accelerator pedal position sensor	AT-188
			3. Shift solenoid valve A	AT-178
			4. Shift solenoid valve B	AT-183
	Gear change from 2_2 to 2_3 in 2nd position.	ON vehicle	1. Park/neutral position (PNP) switch	AT-108
			2. Control cable adjustment	AT-284
	Gear change from 1_1 to 1_2 in 1st position.	ON vehicle	1. Park/neutral position (PNP) switch adjustment	AT-283
			2. Control cable adjustment	AT-284
No Down Shift	Failure to change gear from D_4 to D_3.	ON vehicle	1. Fluid level	AT-64
			2. Accelerator pedal position sensor	AT-188
			3. Overrun clutch solenoid valve	AT-194
			4. Shift solenoid valve A	AT-178
			5. Line pressure solenoid valve	AT-172
			6. Control valve assembly	AT-282
		OFF vehicle	7. Brake band	AT-353
			8. Overrun clutch	AT-336
	Failure to change gear from D_3 to D_2 or from D_4 to D_2.	ON vehicle	1. Fluid level	AT-64
			2. Accelerator pedal position sensor	AT-188
			3. Shift solenoid valve A	AT-178
			4. Shift solenoid valve B	AT-183
			5. Control valve assembly	AT-282
		OFF vehicle	6. High clutch	AT-331
			7. Brake band	AT-353

Symptom Chart (Cont'd)

Items	Symptom	Condition	Diagnostic Item	Reference Page
No Down Shift	Failure to change gear from D_2 to D_1 or from D_3 to D_1.	ON vehicle	1. Fluid level	AT-64
			2. Accelerator pedal position sensor	AT-188
			3. Shift solenoid valve A	AT-178
			4. Shift solenoid valve B	AT-183
			5. Control valve assembly	AT-282
		OFF vehicle	6. Low one-way clutch	AT-288
			7. High clutch	AT-331
			8. Brake band	AT-353
	Failure to change from D_3 to 2_2 when changing lever into 2nd position. AT-254	ON vehicle	1. Accelerator pedal position sensor	AT-188
			2. Shift solenoid valve B	AT-183
			3. Control valve assembly	AT-282
			4. Control cable adjustment	AT-284
		OFF vehicle	5. Brake band	AT-353
	Does not change from 1_2 to 1_1 in 1st position.	ON vehicle	1. Vehicle speed sensor·A/T (Revolution sensor) and vehicle speed sensor·MTR	AT-120, 206
			2. Shift solenoid valve A	AT-178
			3. Control valve assembly	AT-282
		OFF vehicle	4. Low one-way clutch	AT-288
			5. Brake band	AT-353
			6. Low & reverse brake	AT-341
No Up Shift	Failure to change gear from D_1 to D_2.	ON vehicle	1. Control cable adjustment	AT-284
			2. Shift solenoid valve A	AT-178
			3. Control valve assembly	AT-282
			4. Vehicle speed sensor·A/T (Revolution sensor) and vehicle speed sensor·MTR	AT-120, 206
			5. Accelerator pedal position sensor	AT-188
		OFF vehicle	6. Brake band	AT-353
	Failure to change gear from D_2 to D_3.	ON vehicle	1. Control cable adjustment	AT-284
			2. Shift solenoid valve B	AT-183
			3. Control valve assembly	AT-282
			4. Vehicle speed sensor·A/T (Revolution sensor) and vehicle speed sensor·MTR	AT-120, 206
			5. Accelerator pedal position sensor	AT-188
		OFF vehicle	6. High clutch	AT-331
			7. Brake band	AT-353

Symptom Chart (Cont'd)

Items	Symptom	Condition	Diagnostic Item	Reference Page
No Up Shift	Failure to change gear from D_3 to D_4.	ON vehicle	1. Park/neutral position (PNP) switch	AT-108
			2. 3rd position switch	AT-265
			3. Control cable adjustment	AT-284
			4. Shift solenoid valve A	AT-178
			5. Vehicle speed sensor·A/T (Revolution sensor) and vehicle speed sensor·MTR	AT-120, 206
			6. A/T fluid temperature sensor	AT-199
			7. Accelerator pedal position sensor	AT-188
		OFF vehicle	8. Brake band	AT-353
	A/T does not shift to D_4 when driving with selector lever from 3rd to D position.	ON vehicle	1. Accelerator pedal position sensor	AT-188
			2. Park/neutral position (PNP) switch	AT-108
			3. 3rd position switch	AT-265
			4. Vehicle speed sensor·A/T (Revolution sensor) and vehicle speed sensor·MTR	AT-120, 206
			5. Shift solenoid valve A	AT-178
			6. Overrun clutch solenoid valve	AT-194
			7. Control valve assembly	AT-282
			8. A/T fluid temperature sensor	AT-199
			9. Line pressure solenoid valve	AT-172
		OFF vehicle	10. Brake band	AT-353
			11. Overrun clutch	AT-336
Slips/Will Not Engage	Vehicle will not run in R position (but runs in D, 2nd and 1st positions). Clutch slips. Very poor acceleration. AT-231	ON vehicle	1. Control cable adjustment	AT-284
			2. Stall test	AT-64
			3. Line pressure test	AT-68
			4. Line pressure solenoid valve	AT-172
			5. Control valve assembly	AT-282
		OFF vehicle	6. Reverse clutch	AT-328
			7. High clutch	AT-331
			8. Forward clutch	AT-336
			9. Overrun clutch	AT-336
			10. Low & reverse brake	AT-341
	Vehicle will not run in D and 2nd positions (but runs in 1st and R positions).	ON vehicle	1. Control cable adjustment	AT-284
		OFF vehicle	2. Low one-way clutch	AT-288

Symptom Chart (Cont'd)

Items	Symptom	Condition	Diagnostic Item	Reference Page
Slips/Will Not Engage	Vehicle will not run in D, 1st, 2nd positions (but runs in R position). Clutch slips. Very poor acceleration. AT-234	ON vehicle	1. Fluid level	AT-64
			2. Stall test	AT-64
			3. Line pressure test	AT-68
			4. Line pressure solenoid valve	AT-172
			5. Control valve assembly	AT-282
			6. Accumulator N-D	AT-282
		OFF vehicle	7. Reverse clutch	AT-328
			8. High clutch	AT-331
			9. Forward clutch	AT-336
			10. Forward one-way clutch	AT-344
			11. Low one-way clutch	AT-288
	Clutches or brakes slip somewhat in starting.	ON vehicle	1. Fluid level	AT-64
			2. Control cable adjustment	AT-284
			3. Accelerator pedal position sensor	AT-188
			4. Line pressure test	AT-68
			5. Line pressure solenoid valve	AT-172
			6. Control valve assembly	AT-282
			7. Accumulator N-D	AT-282
			8. Shift solenoid valve A	AT-178
			9. Shift solenoid valve B	AT-183
			10. Overrun clutch solenoid valve	AT-194
			11. Torque converter clutch solenoid valve	AT-157
		OFF vehicle	12. Forward clutch	AT-336
			13. Reverse clutch	AT-328
			14. Low & reverse brake	AT-341
			15. Oil pump	AT-310
			16. Torque converter	AT-293
	No creep at all. AT-231, 234	ON vehicle	1. Fluid level	AT-64
			2. Line pressure test	AT-68
			3. Control valve assembly	AT-282
		OFF vehicle	4. Forward clutch	AT-336
			5. Oil pump	AT-310
			6. Torque converter	AT-293

Symptom Chart (Cont'd)

Items	Symptom	Condition	Diagnostic Item	Reference Page
Slips/Will Not Engage	Almost no shock or clutches slipping in change from D_1 to D_2.	ON vehicle	1. Fluid level	AT-64
			2. Accelerator pedal position sensor	AT-188
			3. Line pressure test	AT-68
			4. Accumulator servo release	AT-282
			5. Control valve assembly	AT-282
		OFF vehicle	6. Brake band	AT-353
	Almost no shock or slipping in change from D_2 to D_3.	ON vehicle	1. Fluid level	AT-64
			2. Accelerator pedal position sensor	AT-188
			3. Line pressure test	AT-68
			4. Control valve assembly	AT-282
		OFF vehicle	5. High clutch	AT-331
			6. Brake band	AT-353
	Almost no shock or slipping in change from D_3 to D_4.	ON vehicle	1. Fluid level	AT-64
			2. Accelerator pedal position sensor	AT-188
			3. Line pressure test	AT-68
			4. Control valve assembly	AT-282
		OFF vehicle	5. Brake band	AT-353
	Races extremely fast or slips in changing from D_4 to D_3 when depressing pedal.	ON vehicle	1. Fluid level	AT-64
			2. Accelerator pedal position sensor	AT-188
			3. Line pressure test	AT-68
			4. Line pressure solenoid valve	AT-172
			5. Shift solenoid valve A	AT-178
			6. Control valve assembly	AT-282
		OFF vehicle	7. Brake band	AT-353
			8. Forward clutch	AT-336
	Races extremely fast or slips in changing from D_4 to D_2 when depressing pedal.	ON vehicle	1. Fluid level	AT-64
			2. Accelerator pedal position sensor	AT-188
			3. Line pressure test	AT-68
			4. Line pressure solenoid valve	AT-172
			5. Shift solenoid valve A	AT-178
			6. Shift solenoid valve B	AT-183
			7. Control valve assembly	AT-282
		OFF vehicle	8. Brake band	AT-353
			9. Forward clutch	AT-336

Symptom Chart (Cont'd)

Items	Symptom	Condition	Diagnostic Item	Reference Page
Slips/Will Not Engage	Races extremely fast or slips in changing from D_3 to D_2 when depressing pedal.	ON vehicle	1. Fluid level	AT-64
			2. Accelerator pedal position sensor	AT-188
			3. Line pressure test	AT-68
			4. Line pressure solenoid valve	AT-172
			5. Shift solenoid valve B	AT-183
			6. Control valve assembly	AT-282
		OFF vehicle	7. Brake band	AT-353
			8. High clutch	AT-331
	Races extremely fast or slips in changing from D_4 or D_3 to D_1 when depressing pedal.	ON vehicle	1. Fluid level	AT-64
			2. Accelerator pedal position sensor	AT-188
			3. Line pressure test	AT-68
			4. Line pressure solenoid valve	AT-172
			5. Shift solenoid valve A	AT-178
			6. Shift solenoid valve B	AT-183
			7. Control valve assembly	AT-282
		OFF vehicle	8. Forward clutch	AT-336
			9. Forward one-way clutch	AT-344
			10. Low one-way clutch	AT-288
	Vehicle will not run in any position.	ON vehicle	1. Fluid level	AT-64
			2. Control cable adjustment	AT-284
			3. Line pressure test	AT-68
			4. Line pressure solenoid valve	AT-172
		OFF vehicle	5. Oil pump	AT-310
			6. Torque converter	AT-293
			7. Parking components	AT-288
NOT USED	Engine cannot be started in P and N positions. AT-224	ON vehicle	1. Ignition switch and starter	EL-12, and SC-10
			2. Control cable adjustment	AT-284
			3. Park/neutral position (PNP) switch adjustment	AT-283
	Engine starts in positions other than P and N. AT-224	ON vehicle	1. Control cable adjustment	AT-284
			2. Park/neutral position (PNP) switch adjustment	AT-283

Symptom Chart (Cont'd)

Items	Symptom	Condition	Diagnostic Item	Reference Page
NOT USED	Transaxle noise in P and N positions.	ON vehicle	1. Fluid level	AT-64
			2. Line pressure test	AT-68
			3. Accelerator pedal position sensor	AT-188
			4. Vehicle speed sensor·A/T (Revolution sensor) and vehicle speed sensor·MTR	AT-120, 206
		OFF vehicle	5. Oil pump	AT-310
			6. Torque converter	AT-293
	Vehicle moves when changing into P position or parking gear does not disengage when shifted out of P position. AT-226	ON vehicle	1. Control cable adjustment	AT-284
		OFF vehicle	2. Parking components	AT-288
	Vehicle runs in N position. AT-227	ON vehicle	1. Control cable adjustment	AT-284
		OFF vehicle	2. Forward clutch	AT-336
			3. Reverse clutch	AT-328
			4. Overrun clutch	AT-336
	Vehicle braked when shifting into R position.	ON vehicle	1. Fluid level	AT-64
			2. Line pressure test	AT-68
			3. Line pressure solenoid valve	AT-172
			4. Control valve assembly	AT-282
		OFF vehicle	5. High clutch	AT-331
			6. Brake band	AT-353
			7. Forward clutch	AT-336
			8. Overrun clutch	AT-336
	Excessive creep.	ON vehicle	1. Engine idling rpm	EC-58
	Engine stops when shifting lever into R, D, 2nd and 1st position.	ON vehicle	1. Engine idling rpm	EC-58
			2. Fluid level	AT-64
			3. Torque converter clutch solenoid valve	AT-157
			4. Control valve assembly	AT-282
		OFF vehicle	5. Torque converter	AT-293
	Vehicle braked by gear change from D_1 to D_2.	ON vehicle	1. Fluid level	AT-64
		OFF vehicle	2. Reverse clutch	AT-328
			3. Low & reverse brake	AT-341
			4. High clutch	AT-331
			5. Low one-way clutch	AT-288

Symptom Chart (Cont'd)

Items	Symptom	Condition	Diagnostic Item	Reference Page
NOT USED	Vehicle braked by gear change from D_2 to D_3.	ON vehicle	1. Fluid level	AT-64
		OFF vehicle	2. Brake band	AT-353
	Vehicle braked by gear change from D_3 to D_4.	ON vehicle	1. Fluid level	AT-64
		OFF vehicle	2. Overrun clutch	AT-336
			3. Forward one-way clutch	AT-344
			4. Reverse clutch	AT-328
	Maximum speed not attained. Acceleration poor.	ON vehicle	1. Fluid level	AT-64
			2. Park/neutral position (PNP) switch	AT-108
			3. 3rd position switch	AT-265
			4. Accelerator pedal position sensor	AT-188
			5. Vehicle speed sensor·A/T (Revolution sensor) and vehicle speed sensor·MTR	AT-120, 206
			6. Shift solenoid valve A	AT-178
			7. Shift solenoid valve B	AT-183
			8. Control valve assembly	AT-282
		OFF vehicle	9. Reverse clutch	AT-328
			10. High clutch	AT-331
			11. Brake band	AT-353
			12. Low & reverse brake	AT-341
			13. Oil pump	AT-310
			14. Torque converter	AT-293
	Transaxle noise in D, 2nd, 1st and R positions.	ON vehicle	1. Fluid level	AT-64
		ON vehicle	2. Torque converter	AT-293
	Engine brake does not operate in "1st" position. AT-257	ON vehicle	1. Park/neutral position (PNP) switch	AT-108
			2. Control cable adjustment	AT-284
			3. Vehicle speed sensor·A/T (Revolution sensor) and vehicle speed sensor·MTR	AT-120, 206
			4. Control valve assembly	AT-282
			5. Overrun clutch solenoid valve	AT-194
		OFF vehicle	6. Overrun clutch	AT-336
			7. Low & reverse brake	AT-341

Symptom Chart (Cont'd)

Items	Symptom	Condition	Diagnostic Item	Reference Page
NOT USED	Transaxle overheats.	ON vehicle	1. Fluid level	AT-64
			2. Engine idling rpm	AT-68
			3. Accelerator pedal position sensor	AT-188
			4. Line pressure test	AT-68
			5. Line pressure solenoid valve	AT-172
			6. Control valve assembly	AT-282
		OFF vehicle	7. Oil pump	AT-310
			8. Reverse clutch	AT-328
			9. High clutch	AT-331
			10. Brake band	AT-353
			11. Forward clutch	AT-336
			12. Overrun clutch	AT-336
			13. Low & reverse brake	AT-341
			14. Torque converter	AT-293
	ATF shoots out during operation. White smoke emitted from exhaust pipe during operation.	ON vehicle	1. Fluid level	AT-64
		OFF vehicle	2. Reverse clutch	AT-328
			3. High clutch	AT-331
			4. Brake band	AT-353
			5. Forward clutch	AT-336
			6. Overrun clutch	AT-336
			7. Low & reverse brake	AT-341
	Offensive smell at fluid charging pipe.	ON vehicle	1. Fluid level	AT-64
		OFF vehicle	2. Torque converter	AT-293
			3. Oil pump	AT-310
			4. Reverse clutch	AT-328
			5. High clutch	AT-331
			6. Brake band	AT-353
			7. Forward clutch	AT-336
			8. Overrun clutch	AT-336
			9. Low & reverse brake	AT-341

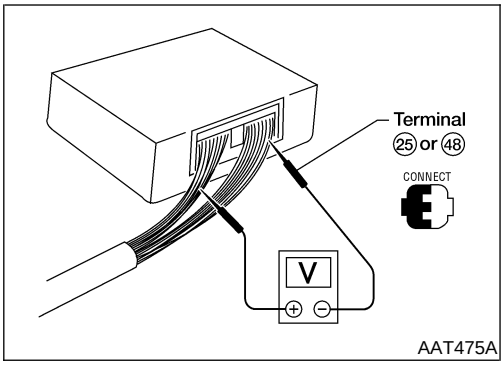

TCM Terminals and Reference Value

=NHAT0031

PREPARATION

NHAT0031S01

- Measure voltage between each terminal and terminal 25 or 48 by following “TCM INSPECTION TABLE”.

TCM HARNESS CONNECTOR TERMINAL LAYOUT

NHAT0031S02

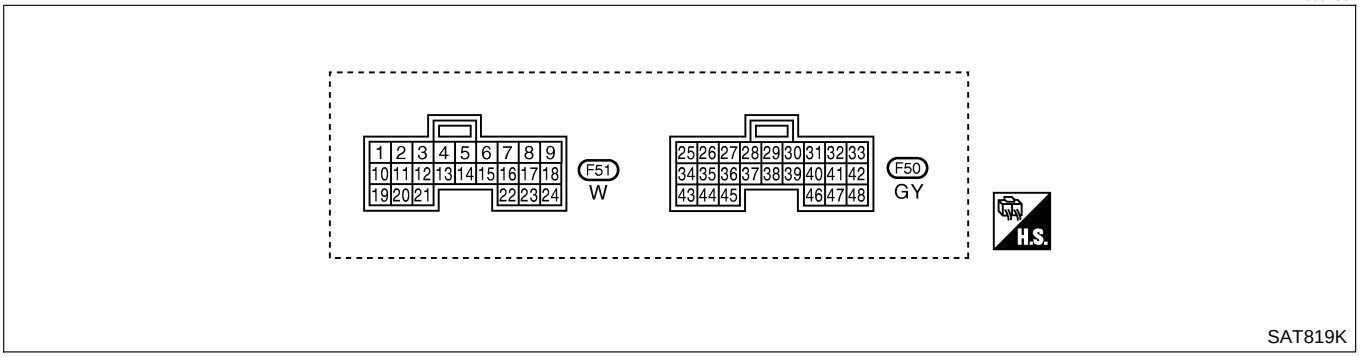

TCM INSPECTION TABLE

NHAT0031S03

(Data are reference values.)

Terminal No.	Wire color	Item	Condition		Judgement standard (Approx.)
1	G/R	Line pressure solenoid valve		When releasing accelerator pedal after warming up engine.	1.5 - 3.0V
				When depressing accelerator pedal fully after warming up engine.	0V
2	W/B	Line pressure solenoid valve (with dropping resistor)		When releasing accelerator pedal after warming up engine.	4 - 14V
				When depressing accelerator pedal fully after warming up engine.	0V
3	G/B	Torque converter clutch solenoid valve		When A/T performs lock-up.	8 - 15V
				When A/T does not perform lock-up.	0V
5	L	CAN-H (high)	—		—
6	R	CAN-L (low)	—		—
10	R/Y	Power source	ON or OFF	When turning ignition switch to ON.	Battery voltage
				When turning ignition switch to OFF.	0V

Terminal No.	Wire color	Item	Condition		Judgement standard (Approx.)
11	R/Y	Shift solenoid valve A		When shift solenoid valve A operates. (When driving in D_1 or D_4.)	Battery voltage
				When shift solenoid valve A does not operate. (When driving in D_2 or D_3.)	0V
12	LG/B	Shift solenoid valve B		When shift solenoid valve B operates. (When driving in D_1 or D_2.)	Battery voltage
				When shift solenoid valve B does not operate. (When driving in D_3 or D_4.)	0V
13	G/R	A/T CHECK indicator lamp		When AT CHECK indicator lamp is ON.	0V
				When AT CHECK indicator lamp is OFF.	Battery voltage
19	R/Y	Power source	Same as No. 10		
20	BR/Y	Overrun clutch solenoid valve		When overrun clutch solenoid valve operates.	Battery voltage
				When overrun clutch solenoid valve does not operate.	0V
22	G/Y	3rd position switch		When the selector lever is in a position other than 3rd position.	Battery voltage
				When the selector lever is in 3rd position.	0V
25	B	Ground	—		0V
26	PU/R	PNP switch 1st position		When setting selector lever to 1st position.	Battery voltage
				When setting selector lever to other positions.	0V
27	P/B	PNP switch 2nd position		When setting selector lever to 2nd position.	Battery voltage
				When setting selector lever to other positions.	0V
28	Y/R	Power source (Memory back-up)	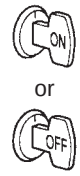 or	When turning ignition switch to OFF.	Battery voltage
				When turning ignition switch to ON.	Battery voltage
29	W	Revolution sensor (VHCL/S SEN)		When moving at 20 km/h (12 MPH), use the CONSULT-II pulse frequency measuring function.*1 **CAUTION:** **Connect the diagnosis data link cable to the vehicle diagnosis connector.** *1: A circuit tester cannot be used to test this item.	450 Hz
				When vehicle parks.	0V

TCM Terminals and Reference Value (Cont'd)

Terminal No.	Wire color	Item	Condition		Judgement standard (Approx.)
30*	BR/Y	Data link connector (RX)		—	—
31*	P	Data link connector (TX)		—	—
32	R	Sensor power		Ignition switch ON.	4.5 - 5.5V
				Ignition switch OFF.	0V
34	Y/PU	PNP switch D position		When setting selector lever to D position.	Battery voltage
				When setting selector lever to other positions.	0V
35	G/W	PNP switch R position		When setting selector lever to R position.	Battery voltage
				When setting selector lever to other positions.	0V
36	R/G	PNP switch P or N position		When setting selector lever to P or N position.	Battery voltage
				When setting selector lever to other positions.	0V
38	PU	Power train revolution sensor		When moving at 20 km/h (12 MPH), use the CONSULT-II pulse frequency measuring function.*1 **CAUTION:** **Connect the diagnosis data link cable to the vehicle diagnosis connector.** *1: A circuit tester cannot be used to test this item.	240 Hz
				When vehicle parks.	Under 1.3V or over 4.5V
39	W/G	Engine speed signal (TACHO)	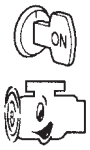	Refer to EC-137, "ECM INSPECTION TABLE".	
40	PU/R	Vehicle speed sensor (MTR)		When moving vehicle at 2 to 3 km/h (1 to 2 MPH) for 1 m (3 ft) or more.	Intermittently changes between approx. 0V and approx. 4.5V
41	W	Accelerator pedal position sensor		When depressing accelerator pedal slowly after warming up engine. (Voltage rises gradually in response to throttle position.)	Fully-closed throttle: 0.5V Fully-open throttle: 4V
42	B	Sensor ground	—		0V
45	R/G	Stop lamp switch		When depressing brake pedal	Battery voltage
				When releasing brake pedal	0V
47	G	A/T fluid temperature sensor		When ATF temperature is 20°C (68°F).	1.5V
				When ATF temperature is 80°C (176°F).	0.5V
48	B	Ground	—		0V

*: These terminals are connected to the Data link connector.

Wiring Diagram — AT — MAIN

NHAT0032

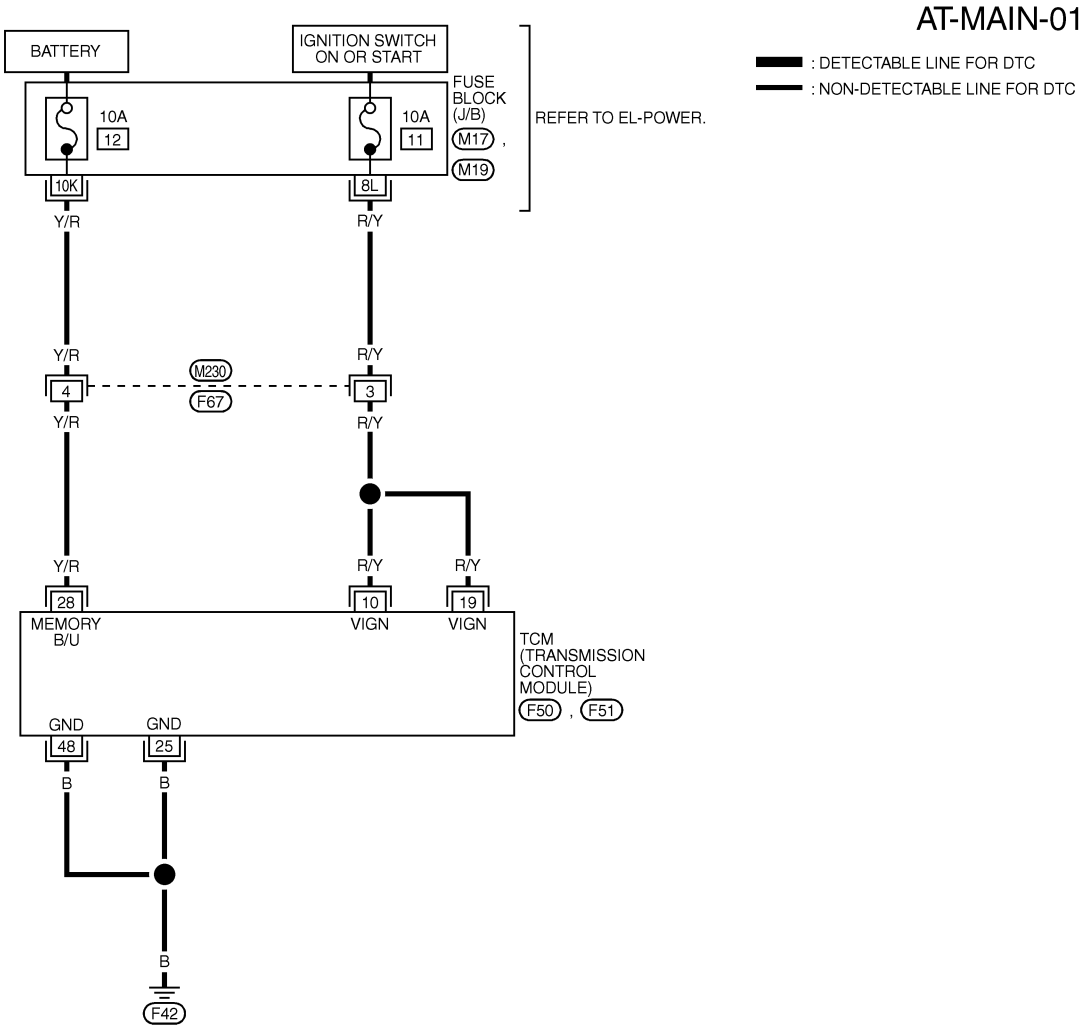

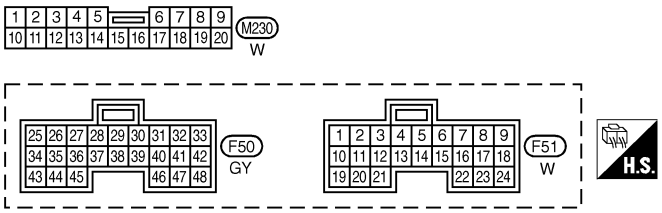

REFER TO THE FOLLOWING.
M17 , M19 - FUSE BLOCK - JUNCTION BOX (J/B)

MAT470B

TCM TERMINALS AND REFERENCE VALUE

=NHAT0032S01

Terminal No.	Wire color	Item	Condition		Judgement standard (Approx.)
10	R/Y	Power source	ON or OFF	When turning ignition switch to ON.	Battery voltage
				When turning ignition switch to OFF.	0V
19	R/Y	Power source		Same as No. 10	
25	B	Ground	—		0V
28	Y/R	Power source (Memory back-up)	ON or OFF	When turning ignition switch to OFF.	Battery voltage
				When turning ignition switch to ON.	Battery voltage
48	B	Ground	—		0V

Diagnostic Procedure

NHAT0033

1 CHECK TCM POWER SOURCE STEP 1

1. Turn ignition switch to ON position.
   (Do not start engine.)
2. Check voltage between TCM harness connectors F50, 51 terminals 10 (R/Y), 19 (R/Y), 28 (Y/R) and ground.

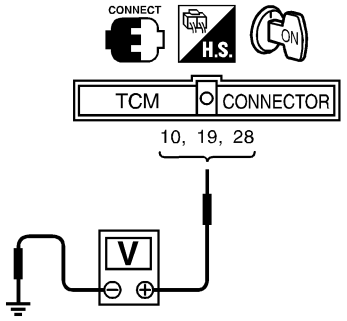

Voltage:
Battery voltage

SAT611J

OK or NG

OK	▶	GO TO 2.
NG	▶	GO TO 3.

2	CHECK TCM POWER SOURCE STEP 2

1. Turn ignition switch to OFF position.
2. Check voltage between TCM harness connector F50 terminal 28 (Y/R) and ground.

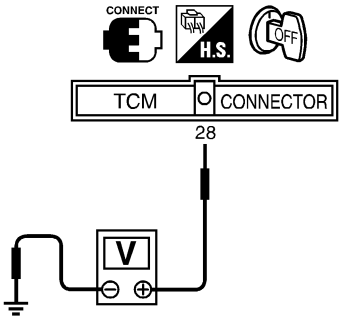

Voltage:
Battery voltage

SAT612JF

OK or NG

OK	▶	GO TO 4.
NG	▶	GO TO 3.

3	DETECT MALFUNCTIONING ITEM

Check the following items:
- Harness for short or open between battery, ignition switch and TCM harness connectors F50, F51 terminals 10 (R/Y), 19 (R/Y) and 28 (Y/R)
- Fuse
- Ignition switch
  Refer to EL-11, "POWER SUPPLY ROUTING".

OK or NG

OK	▶	GO TO 4.
NG	▶	Repair or replace damaged parts.

4	CHECK TCM GROUND CIRCUIT

1. Turn ignition switch to OFF position.
2. Disconnect TCM harness connector.
3. Check continuity between TCM harness connector F50 terminals 25 (B), 48 (B) and ground. Refer to wiring diagram — AT — MAIN.
   Continuity should exist.
   If OK, check harness for short to ground and short to power.

OK or NG

OK	▶	**INSPECTION END**
NG	▶	Repair open circuit or short to ground or short to power in harness or connectors.

Description

NHAT0252

CAN (Controller Area Network) is a serial communication line for real time application. It is an on-vehicle multiplex communication line with high data communication speed and excellent error detection ability. Many electronic control units are equipped onto a vehicle, and each control unit shares information and links with other control units during operation (not independent). In CAN communication, control units are connected with 2 communication lines (CAN H line, CAN L line) allowing a high rate of information transmission with less wiring. Each control units transmits/receives data but selectively reads required data only.

TCM TERMINALS AND REFERENCE VALUE

NHAT0252S01

Remarks: Specification data are reference values.

Terminal No.	Wire color	Item	Condition	Judgement standard (Approx.)
5	L	CAN-H (high)	—	—
6	R	CAN-L (low)	—	—

On Board Diagnosis Logic

NHAT0253

Diagnostic trouble code CAN COMM CIRCUIT with CONSULT-II or U1000 without CONSULT-II is detected when malfunction is detected in CAN communication line.

Possible Cause

NHAT0254

Check harness or connector.
(CAN communication line is open or shorted.)

SELECT SYSTEM
A/T
ENGINE

SAT014K

SELECT DIAG MODE
WORK SUPPORT
SELF DIAGNOSIS
DATA MONITOR
CAN DIAG SUPPORT MNTR
FUNCTION TEST
DTC WORK SUPPORT

SAT860K

Diagnostic Trouble Code (DTC) Confirmation Procedure

NHAT0255

After the repair, perform the following procedure to confirm the malfunction is eliminated.

WITH CONSULT-II

NHAT0255S01

1) Turn ignition switch “ON”.
2) Select “DATA MONITOR” mode for “A/T” with CONSULT-II.
3) Wait at least 6 seconds or start engine and wait for at least 6 seconds.

WITH GST

NHAT0255S02

Follow the procedure “With CONSULT-II”.

Wiring Diagram — AT — CAN

NHAT0256

AT-CAN-01

: DETECTABLE LINE FOR DTC
: NON-DETECTABLE LINE FOR DTC
: DATA LINE

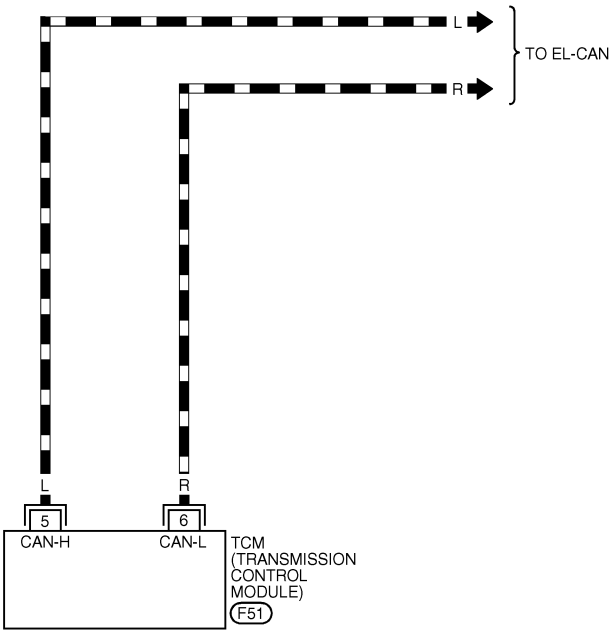

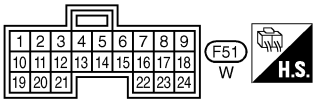

MAT471B

Diagnostic Procedure

NHAT0257

1	CHECK CAN COMMUNICATION CIRCUIT

With CONSULT-II

1. Turn ignition switch to “ON” position. (Do not start engine.)
2. Select “SELF-DIAG RESULTS” mode for “A/T” with CONSULT-II.
3. The “CAN COMM CIRCUIT” is detected.

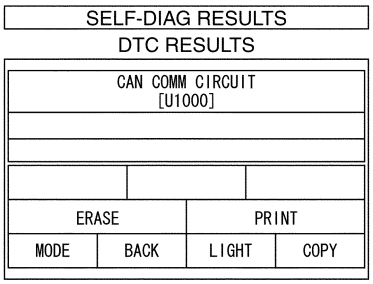

PCIA0061E

Yes or No?

Yes	▶	Print out CONSULT-II screen, go to EL-450, “CAN System” (For TCS Models) and EL-463, “CAN System” (For VDC Models).
No	▶	INSPECTION END

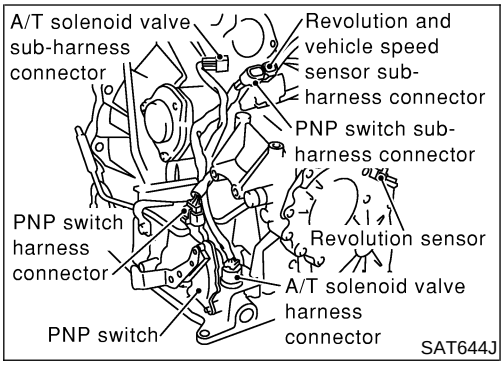

Description

NHAT0034

- The park/neutral position (PNP) switch includes a transmission range switch.
- The transmission range switch detects the selector lever position and sends a signal to the TCM.

TCM TERMINALS AND REFERENCE VALUE

NHAT0034S01

Remarks: Specification data are reference values.

Terminal No.	Wire color	Item	Condition		Judgement standard (Approx.)
26	PU/R	PNP switch 1st position	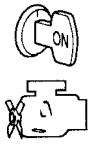	When setting selector lever to 1st position.	Battery voltage
				When setting selector lever to other positions.	0V
27	P/B	PNP switch 2nd position		When setting selector lever to 2nd position.	Battery voltage
				When setting selector lever to other positions.	0V
34	Y/PU	PNP switch D position		When setting selector lever to D position.	Battery voltage
				When setting selector lever to other positions.	0V
35	G/W	PNP switch R position		When setting selector lever to R position.	Battery voltage
				When setting selector lever to other positions.	0V
36	R/G	PNP switch P or N position		When setting selector lever to P or N position.	Battery voltage
				When setting selector lever to other positions.	0V

On Board Diagnosis Logic

NHAT0201

Diagnostic trouble code PNP SW/CIRC with CONSULT-II or P0705 without CONSULT-II is detected when TCM does not receive the correct voltage signal from the switch based on the gear position.

Possible Cause

NHAT0202

Check the following items.

- Harness or connectors
  (The park/neutral position (PNP) switch circuit is open or shorted.)
- Park/neutral position (PNP) switch

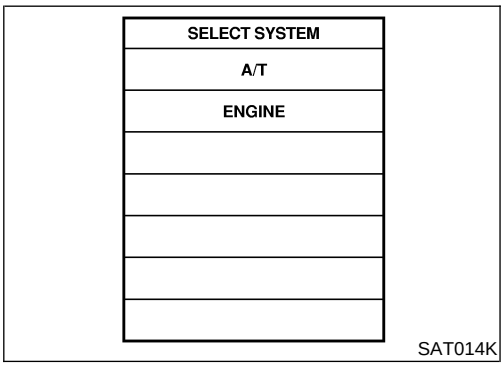

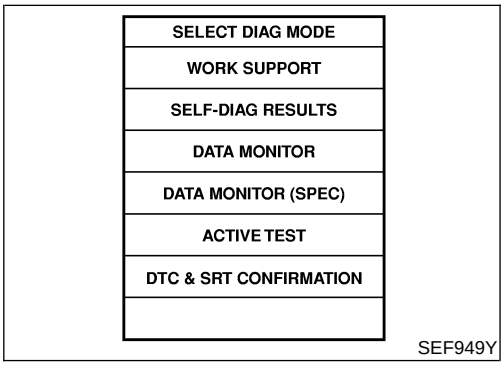

Diagnostic Trouble Code (DTC) Confirmation Procedure

NHAT0203

CAUTION:

Always drive vehicle at a safe speed.

NOTE:

If "DTC Confirmation Procedure" has been previously conducted, always turn ignition switch OFF and wait at least 10 seconds before conducting the next test.

After the repair, perform the following procedure to confirm the malfunction is eliminated.

WITH CONSULT-II

NHAT0203S01

1) Turn ignition switch ON.
2) Select "DATA MONITOR" mode for "ENGINE" with CONSULT-II.
3) Start engine and maintain the following conditions for at least 5 consecutive seconds.
   VHCL SPEED SE: 10 km/h (6 MPH) or more
   THRTL POS SEN: More than 1.3V
   Selector lever: 3rd or D position

WITH GST

NHAT0203S02

Follow the procedure "With CONSULT-II".

Wiring Diagram — AT — PNP/SW

NHAT0035

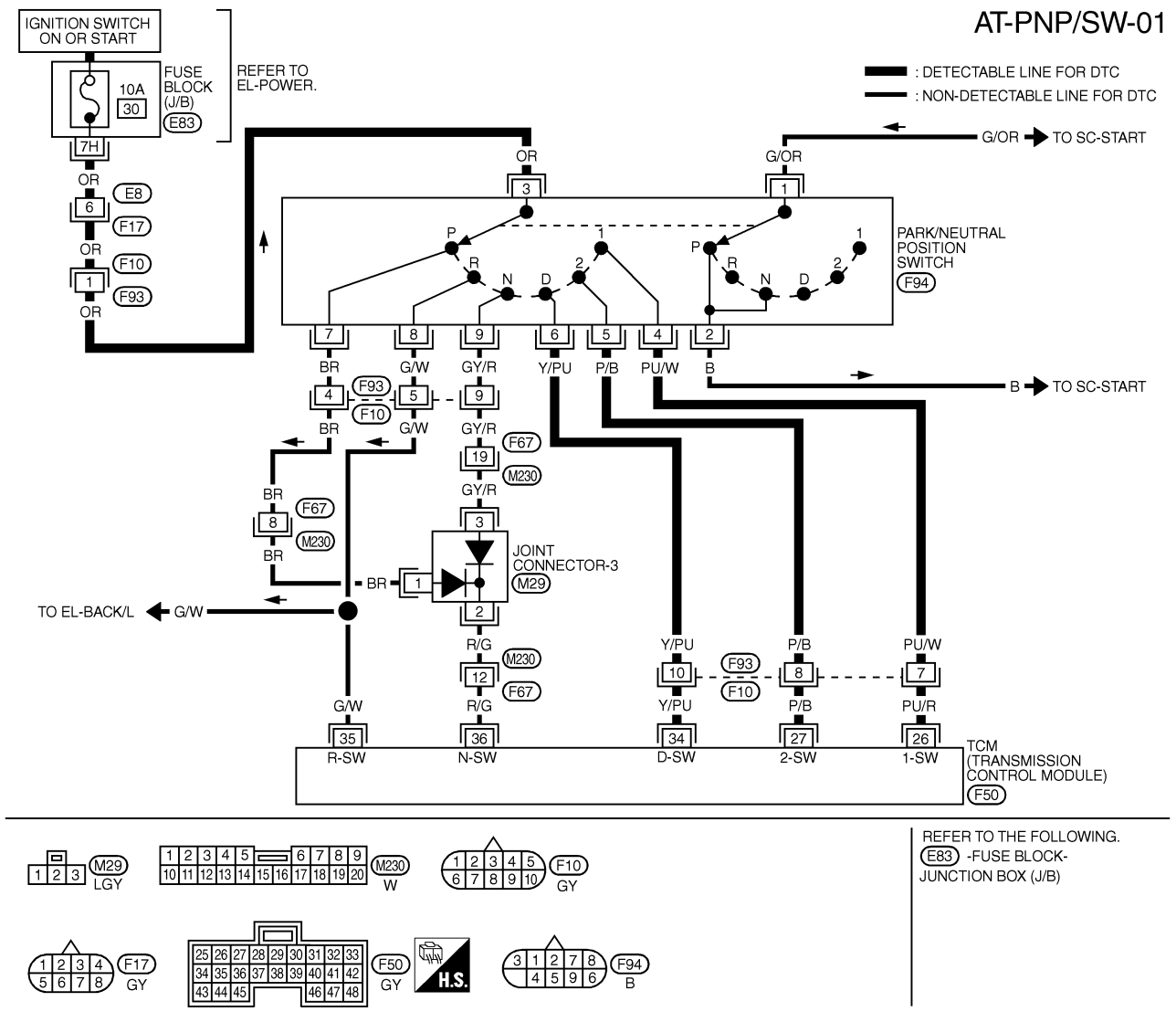

MAT472B

Diagnostic Procedure

=NHAT0036

1	INSPECTION START	
Do you have CONSULT-II?		
	Yes or No	
Yes	▶	GO TO 2.
No	▶	GO TO 6.

2	CHECK PARK/NEUTRAL POSITION (PNP) SWITCH CIRCUIT (With CONSULT-II)	

With CONSULT-II

1. Turn ignition switch to ON position.
   (Do not start engine.)
2. Select “TCM INPUT SIGNALS” in “DATA MONITOR” mode for “A/T” with CONSULT-II.
3. Read out P, R, N, D, 2nd and 1st position switches moving selector lever to each position.
   Check the signal of the selector lever position is indicated properly.

DATA MONITOR	
MONITORING	
PN POSI SW	OFF
R POSITION SW	OFF
D POSITION SW	OFF
2 POSITION SW	ON
1 POSITION SW	OFF

SAT701J

	OK or NG	
OK	▶	GO TO 7.
NG	▶	GO TO 3.

3	DETECT MALFUNCTIONING ITEM	

Check the following item:

- Park/neutral position (PNP) switch
  Check continuity between PNP switch harness connector F94 terminals 1 (G/OR) and 2 (B) and between terminals 3 (OR) and 4 (PU/W), 5 (P/B), 6 (Y/PU), 7 (BR), 8 (G/W), 9 (GY/R) while moving manual shaft through each position.

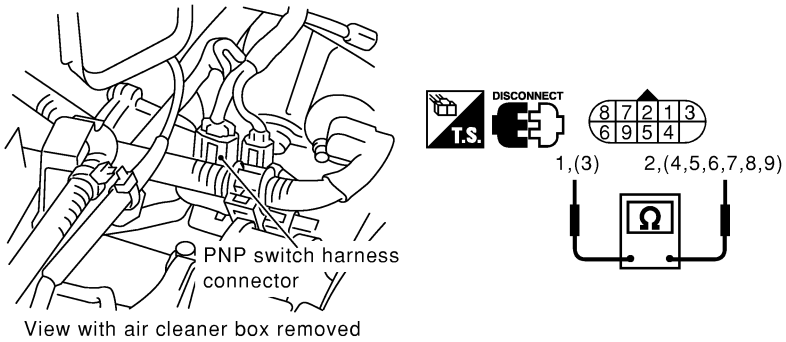

Lever position	Terminal No.	
P	3 - 7	1 - 2
R	3 - 8	
N	3 - 9	1 - 2
D	3 - 6	
2	3 - 5	
1	3 - 4	

SAT615JA

	OK or NG	
OK	▶	GO TO 5.
NG	▶	GO TO 4.

4	CHECK MANUAL CONTROL CABLE ADJUSTMENT	
Check PNP switch again with manual control cable disconnected from manual shaft of A/T assembly. Refer to test group 2 (With CONSULT-II) or 6 (Without CONSULT-II).		
OK or NG		
OK	▶	Adjust manual control cable. Refer to AT-284.
NG	▶	Repair or replace PNP switch.

5	DETECT MALFUNCTIONING ITEM	
Check the following items: ● Harness for short or open between ignition switch and park/neutral position (PNP) switch ● Harness for short or open between park/neutral position (PNP) switch and TCM ● Fuse ● Joint connector-3 M29 ● Ignition switch Refer to EL-11, "POWER SUPPLY ROUTING".		
OK or NG		
OK	▶	GO TO 7.
NG	▶	Repair or replace damaged parts.

6 CHECK PARK/NEUTRAL POSITION (PNP) SWITCH CIRCUIT (Without CONSULT-II)

Without CONSULT-II

1. Turn ignition switch to ON position. (Do not start engine.)
2. Check voltage between TCM harness connector F50 terminals 26 (PU/R), 27 (P/B), 34 (Y/PU), 35 (G/W), 36 (R/G) and ground while moving selector lever through each position.

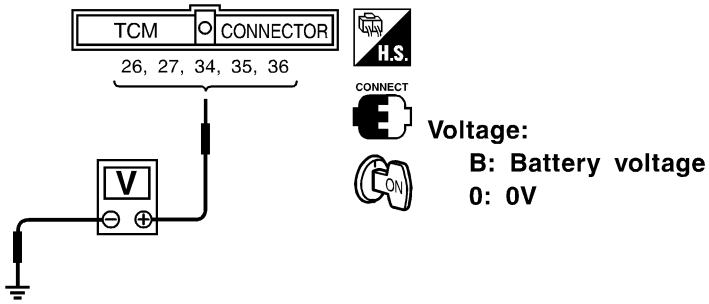

Lever position	Terminal No.				
	36	35	34	27	26
P, N	**B**	0	0	0	0
R	0	**B**	0	0	0
D	0	0	**B**	0	0
2	0	0	0	**B**	0
1	0	0	0	0	**B**

SAT840J

OK or NG		
OK	▶	GO TO 7.
NG	▶	GO TO 3.

7	CHECK DTC	
Perform Diagnostic Trouble Code (DTC) confirmation procedure, AT-109.		
OK or NG		
OK	▶	**INSPECTION END**
NG	▶	GO TO 8.

8	CHECK TCM INSPECTION	
1. Perform TCM input/output signal inspection. 2. If NG, recheck TCM pin terminals for damage or loose connection with harness connector. **OK or NG**		
OK	▶	**INSPECTION END**
NG	▶	Repair or replace damaged parts.

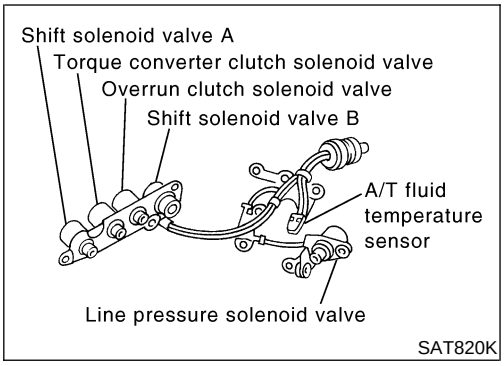

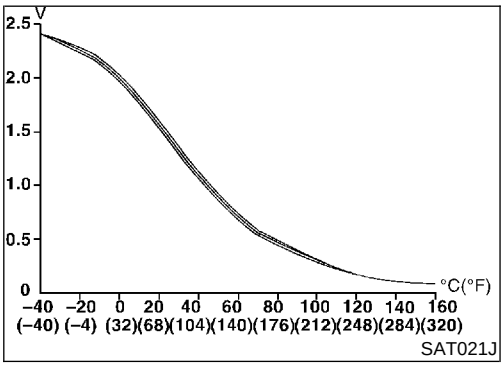

Description

NHAT0037

The A/T fluid temperature sensor detects the A/T fluid temperature and sends a signal to the TCM.

CONSULT-II REFERENCE VALUE IN DATA MONITOR MODE

NHAT0037S01

Remarks: Specification data are reference values.

Monitor item	Condition	Specification (Approximately)	
A/T fluid temperature sensor	Cold [20°C (68°F)] ↓ Hot [80°C (176°F)]	1.5V ↓ 0.5V	2.5 kΩ ↓ 0.3 kΩ

TCM TERMINALS AND REFERENCE VALUE

NHAT0037S02

Remarks: Specification data are reference values.

Terminal No.	Wire color	Item	Condition		Judgement standard (Approx.)
42	B	Sensor ground	—		0V
47	G	A/T fluid temperature sensor	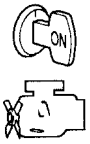	When ATF temperature is 20°C (68°F).	1.5V
				When ATF temperature is 80°C (176°F).	0.5V

On Board Diagnosis Logic

NHAT0204

Diagnostic trouble code ATF TEMP SEN/CIRC with CONSULT-II or P0710 without CONSULT-II is detected when TCM receives an excessively low or high voltage from the sensor.

Possible Cause

NHAT0205

Check the following items.

- Harness or connectors
  (The sensor circuit is open or shorted.)
- A/T fluid temperature sensor

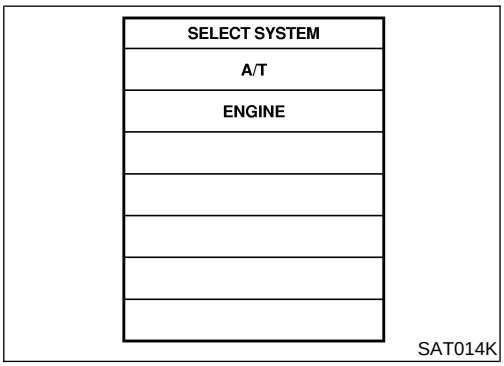

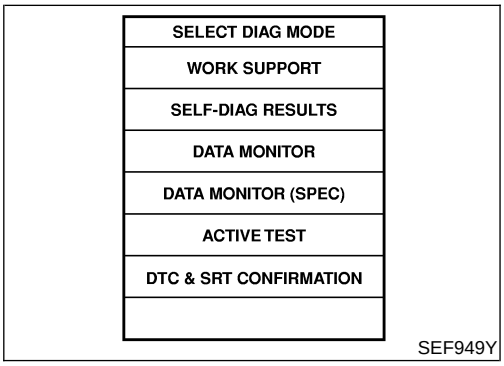

Diagnostic Trouble Code (DTC) Confirmation Procedure

NHAT0206

CAUTION:

Always drive vehicle at a safe speed.

NOTE:

If "DTC Confirmation Procedure" has been previously conducted, always turn ignition switch OFF and wait at least 10 seconds before conducting the next test.

After the repair, perform the following procedure to confirm the malfunction is eliminated.

WITH CONSULT-II

NHAT0206S01

1) Turn ignition switch ON and select "DATA MONITOR" mode for "ENGINE" with CONSULT-II.
2) Start engine and maintain the following conditions for at least 10 minutes (Total). (It is not necessary to maintain continuously.)
   CMPS·RPM (REF): 450 rpm or more
   VHCL SPEED SE: 10 km/h (6 MPH) or more
   THRTL POS SEN: More than 1.2V
   Selector lever: D position

WITH GST

NHAT0206S02

Follow the procedure "With CONSULT-II".

Wiring Diagram — AT — FTS

NHAT0038

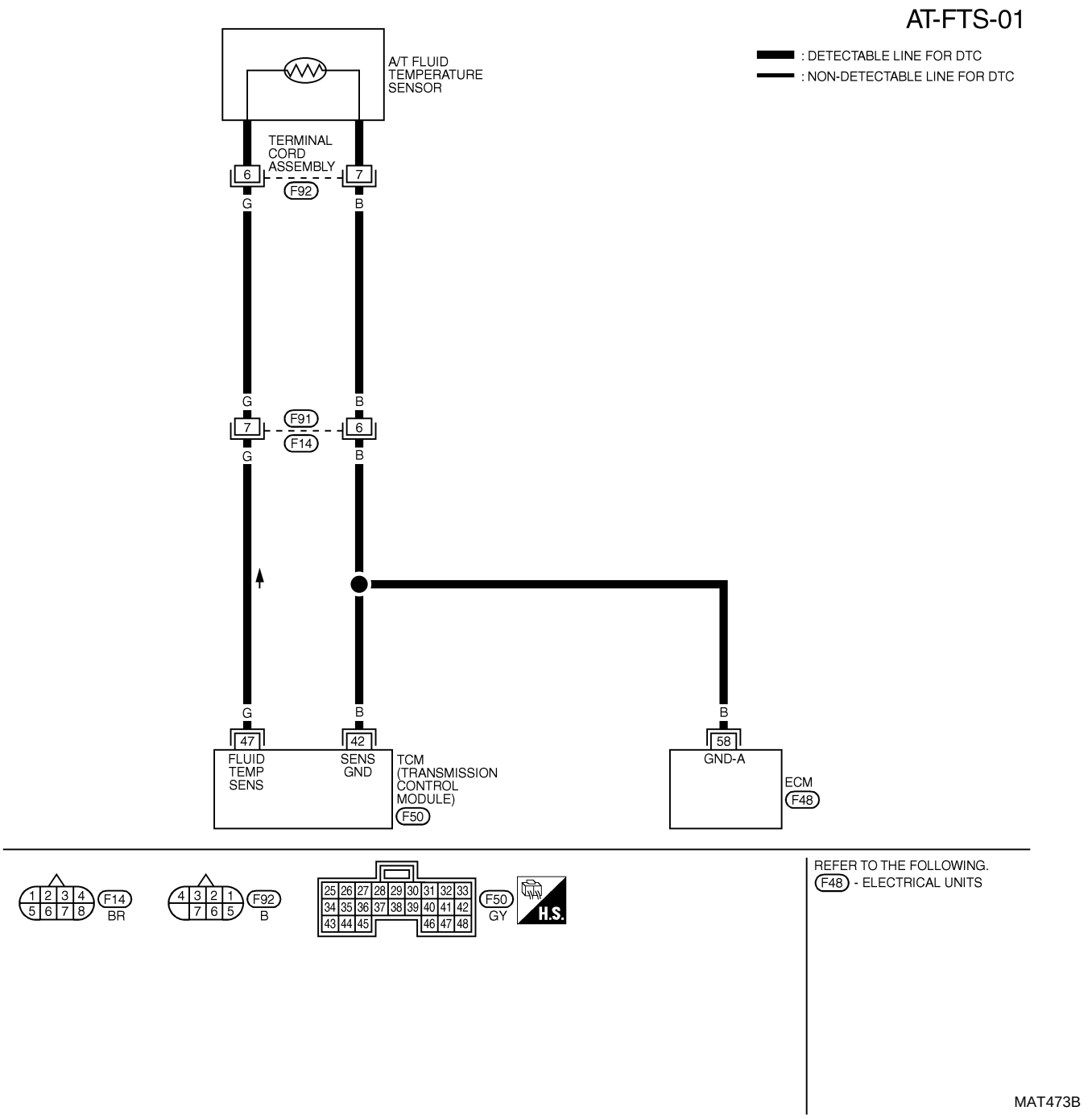

Diagnostic Procedure

=NHAT0039

1	INSPECTION START
Do you have CONSULT-II?	
Yes or No	
Yes ▶	GO TO 2.
No ▶	GO TO 6.

2	CHECK INPUT SIGNAL OF A/T FLUID TEMPERATURE SENSOR (With CONSULT-II)

With CONSULT-II

1. Start engine.
2. Select “TCM INPUT SIGNALS” in “DATA MONITOR” mode for “A/T” with CONSULT-II.
3. Read out the value of “FLUID TEMP SE”.

DATA MONITOR	
MONITORING	
VHCL/S SE-A/T	XXX km/h
VHCL/S SE-MTR	XXX km/h
THRTL POS SEN	XXX V
FLUID TEMP SE	XXX V
BATTERY VOLT	XXX V

SAT614J

Voltage:
Cold [20°C (68°F)] → Hot [80°C (176°F)]:
Approximately 1.5V → 0.5V

OK or NG

OK ▶	GO TO 7.
NG ▶	GO TO 3.

3	CHECK A/T FLUID TEMPERATURE SENSOR WITH TERMINAL CORD ASSEMBLY

1. Turn ignition switch to OFF position.
2. Disconnect terminal cord assembly connector in engine compartment.
3. Check resistance between terminals 6 (G) and 7 (B) when A/T is cold.

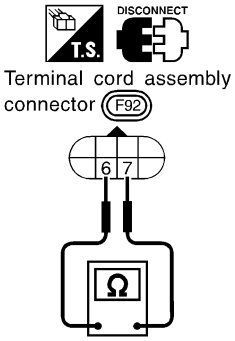

Resistance:
Cold [20°C (68°F)]
Approximately 2.5 kΩ

SAT616JA

4. Reinstall any part removed.

OK or NG

OK ▶	GO TO 4.
NG ▶	GO TO 5.

4	DETECT MALFUNCTIONING ITEM	
Check the following items: ● Harness for short to ground or short to power or open between TCM, ECM and terminal cord assembly ● Ground circuit for ECM Refer to EC-153, "TROUBLE DIAGNOSIS FOR POWER SUPPLY".		
OK or NG		
OK	▶	GO TO 7.
NG	▶	Repair or replace damaged parts.

5	DETECT MALFUNCTIONING ITEM	

1. Remove oil pan, refer to AT-282.
2. Check the following items:

● A/T fluid temperature sensor
Check resistance between A/T fluid temperature sensor harness connector F92 terminals 6 (G) and 7 (B) while changing temperature as shown at below.

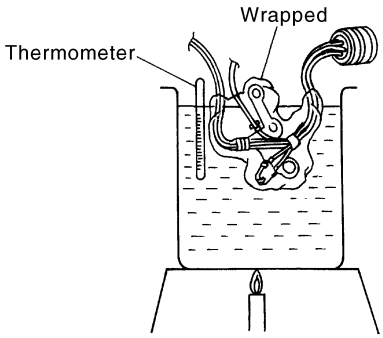

SAT821K

Temperature °C (°F)	Resistance
20 (68)	Approximately 2.5 kΩ
80 (176)	Approximately 0.3 kΩ

MTBL0210

● Harness of terminal cord assembly for short or open

OK or NG		
OK	▶	GO TO 7.
NG	▶	Repair or replace damaged parts.

6	CHECK INPUT SIGNAL OF A/T FLUID TEMPERATURE SENSOR (Without CONSULT-II)

Without CONSULT-II
1. Start engine.
2. Check voltage between TCM harness connector F50 terminal 47 (G) and ground while warming up A/T.

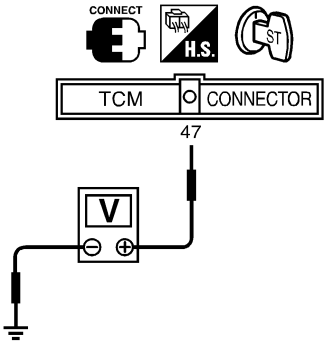

SAT335JA

Voltage:
Cold [20°C (68°F)] → Hot [80°C (176°F)]:
Approximately 1.5V → 0.5V

OK or NG

OK	▶	GO TO 7.
NG	▶	GO TO 3.

7	CHECK DTC

Perform Diagnostic Trouble Code (DTC) confirmation procedure, AT-115.

OK or NG

OK	▶	**INSPECTION END**
NG	▶	GO TO 8.

8	CHECK TCM INSPECTION

1. Perform TCM input/output signal inspection.
2. If NG, recheck TCM pin terminals for damage or loose connection with harness connector.

OK or NG

OK	▶	**INSPECTION END**
NG	▶	Repair or replace damaged parts.

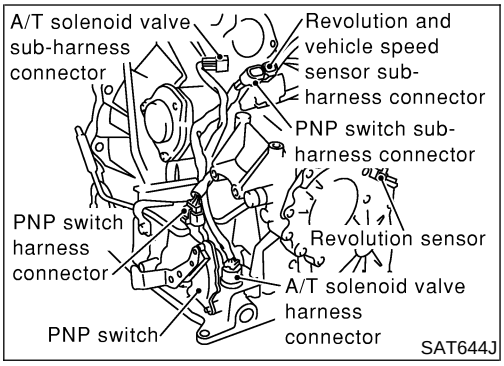

Description

NHAT0040

The revolution sensor detects the revolution of the idler gear parking pawl lock gear and emits a pulse signal. The pulse signal is sent to the TCM which converts it into vehicle speed.

TCM TERMINALS AND REFERENCE VALUE

NHAT0040S01

Remarks: Specification data are reference values.

Terminal No.	Wire color	Item	Condition		Judgement standard (Approx.)
29	W	Revolution sensor		When moving at 20 km/h (12 MPH), use the CONSULT-II pulse frequency measuring function.*1 **CAUTION:** **Connect the diagnosis data link cable to the vehicle diagnosis connector.** *1: A circuit tester cannot be used to test this item.	450 Hz
				When vehicle parks.	0V
42	B	Sensor ground	—		0V

On Board Diagnosis Logic

NHAT0207

Diagnostic trouble code VEH SPD SEN/CIR AT with CONSULT-II or P0720 without CONSULT-II is detected when TCM does not receive the proper voltage signal from the sensor.

Possible Cause

NHAT0208

Check the following items.

- Harness or connectors
  (The sensor circuit is open or shorted.)
- Revolution sensor

SELECT SYSTEM
A/T
ENGINE

SAT014K

SELECT DIAG MODE
WORK SUPPORT
SELF DIAGNOSIS
DATA MONITOR
CAN DIAG SUPPORT MNTR
FUNCTION TEST
DTC WORK SUPPORT

SAT860K

SELECT SYSTEM
A/T
ENGINE

SAT014K

SELECT DIAG MODE
WORK SUPPORT
SELF-DIAG RESULTS
DATA MONITOR
DATA MONITOR (SPEC)
ACTIVE TEST
DTC & SRT CONFIRMATION

SEF949Y

Diagnostic Trouble Code (DTC) Confirmation Procedure

NHAT0209

CAUTION:

- **Always drive vehicle at a safe speed.**
- **Be careful not to rev engine into the red zone on the tachometer.**

NOTE:

If "DTC Confirmation Procedure" has been previously conducted, always turn ignition switch OFF and wait at least 10 seconds before conducting the next test.

After the repair, perform the following procedure to confirm the malfunction is eliminated.

WITH CONSULT-II

NHAT0209S01

1) Turn ignition switch ON and select "DATA MONITOR" mode for "A/T" with CONSULT-II.
2) Drive vehicle and check for an increase of "VHCL/S SE·MTR" value.
   If the check result is NG, go to "DIAGNOSTIC PROCEDURE", AT-207.
   If the check result is OK, go to following step.
3) Select "DATA MONITOR" mode for "ENGINE" with CONSULT-II.
4) Start engine and maintain the following conditions for at least 5 consecutive seconds.
   VHCL SPEED SE: 30 km/h (19 MPH) or more
   THRTL POS SEN: More than 1.2V
   Selector lever: D position
   Driving location: Driving the vehicle uphill (increased engine load) will help maintain the driving conditions required for this test.
   If the check result is NG, go to "DIAGNOSTIC PROCEDURE", AT-123.
   If the check result is OK, go to following step.
5) Maintain the following conditions for at least 5 consecutive seconds.
   CMPS·RPM (REF): 3,500 rpm or more
   THRTL POS SEN: More than 1.2V
   Selector lever: D position
   Driving location: Driving the vehicle uphill (increased engine load) will help maintain the driving conditions required for this test.

WITH GST

NHAT0209S02

Follow the procedure "With CONSULT-II".

Wiring Diagram — AT — VSSA/T

NHAT0041

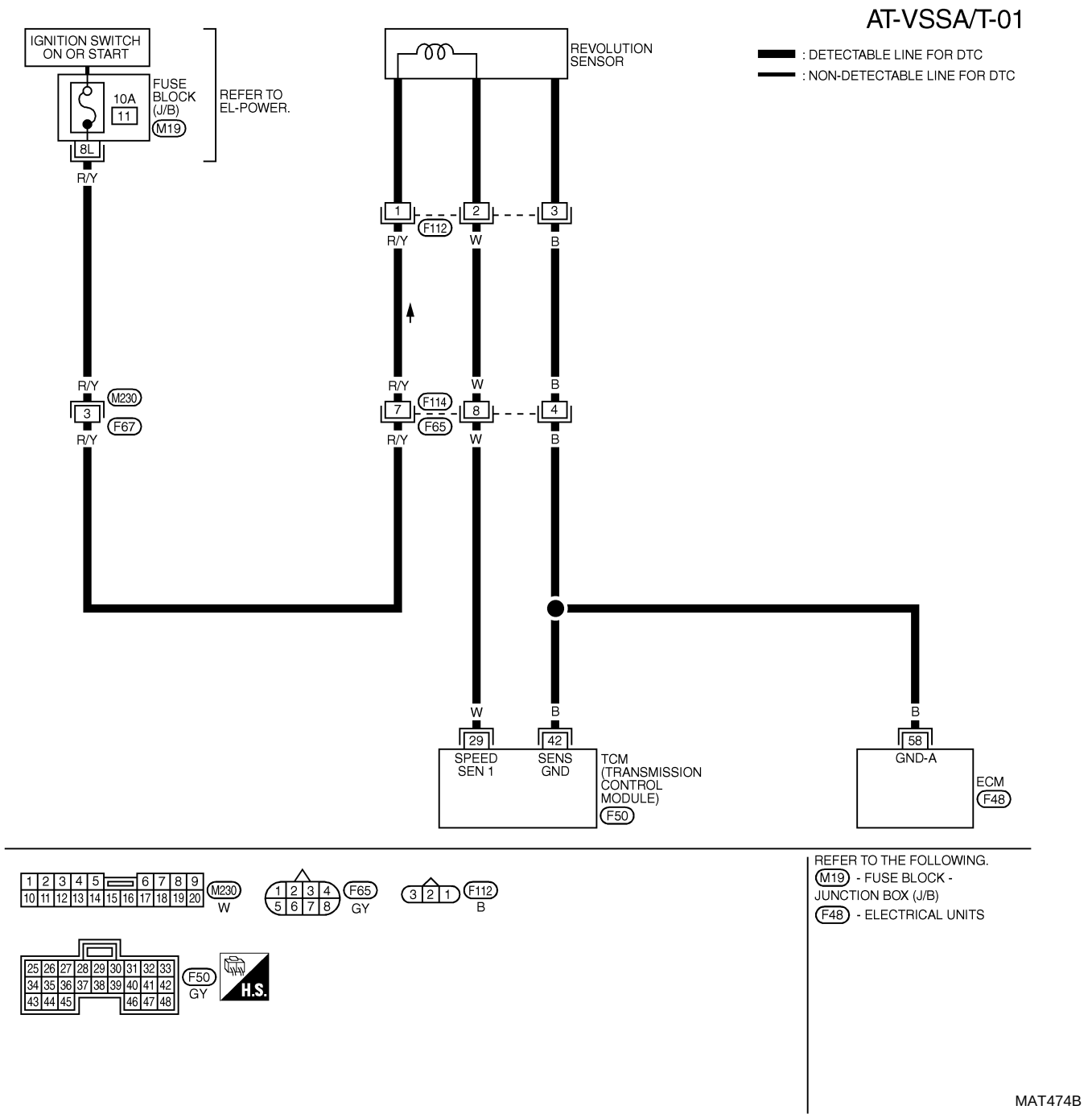

Diagnostic Procedure

NHAT0042

1	CHECK INPUT SIGNAL (With CONSULT-II)

With CONSULT-II
1. Start engine.
2. Select “TCM INPUT SIGNALS” in “DATA MONITOR” mode for “A/T” with CONSULT-II.
3. Read out the value of “VHCL/S SE·A/T” while driving.
   Check the value changes according to driving speed.

DATA MONITOR	
MONITORING	
VHCL/S SE-A/T	XXX km/h
VHCL/S SE-MTR	XXX km/h
THRTL POS SEN	XXX V
FLUID TEMP SE	XXX V
BATTERY VOLT	XXX V

SAT614J

OK or NG

OK	▶	GO TO 3.
NG	▶	GO TO 2.

2	CHECK REVOLUTION SENSOR (With CONSULT-II)

With CONSULT-II
1. Start engine.

Condition	Judgement standard (Approx.)
When moving at 20 km/h (12 MPH), use the CONSULT-II pulse frequency measuring function. *1 **CAUTION:** **Connect the diagnosis data link cable to the vehicle diagnosis connector.** *1: A circuit tester cannot be used to test this item.	450 Hz
When vehicle parks.	0V

MTBL1182

- Harness for short or open between TCM, ECM and revolution sensor
- Harness for short or open between ignition switch and revolution sensor

OK or NG

OK	▶	GO TO 3.
NG	▶	Repair or replace damaged parts.

3	CHECK DTC

Perform Diagnostic Trouble Code (DTC) confirmation procedure, AT-121.

OK or NG

OK	▶	**INSPECTION END**
NG	▶	GO TO 4.

4	CHECK TCM INSPECTION	
1. Perform TCM input/output signal inspection. 2. If NG, recheck TCM pin terminals for damage or loose connection with harness connector. **OK or NG**		
OK	▶	**INSPECTION END**
NG	▶	Repair or replace damaged parts.

Description

NHAT0043

The engine speed signal is sent from the ECM to the TCM.

TCM TERMINALS AND REFERENCE VALUE

NHAT0043S01

Remarks: Specification data are reference values.

Terminal No.	Wire color	Item	Condition		Judgement standard (Approx.)
39	W/G	Engine speed signal	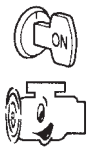	Refer to EC-137, “ECM INSPECTION TABLE”.	

On Board Diagnosis Logic

NHAT0210

Diagnostic trouble code ENGINE SPEED SIG with CONSULT-II or P0725 without CONSULT-II is detected when TCM does not receive the proper voltage signal from ECM.

Possible Cause

NHAT0211

Check harness or connectors. (The sensor circuit is open or shorted.)

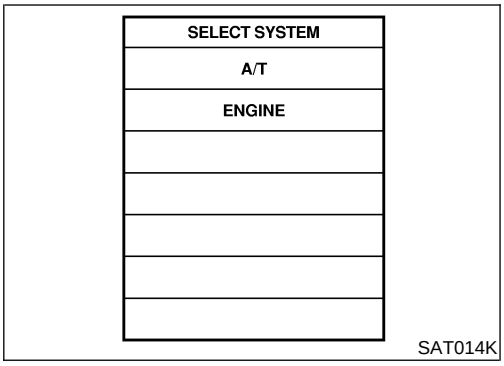

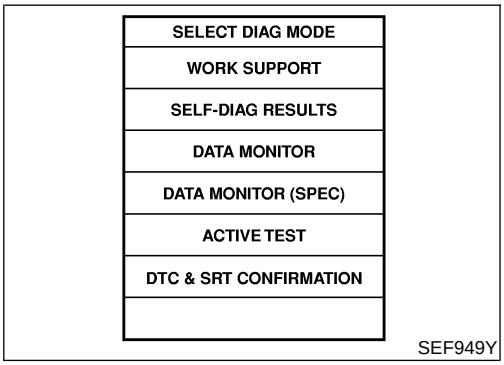

Diagnostic Trouble Code (DTC) Confirmation Procedure

NHAT0212

CAUTION:

Always drive vehicle at a safe speed.

NOTE:

If “DTC Confirmation Procedure” has been previously conducted, always turn ignition switch OFF and wait at least 10 seconds before conducting the next test.

After the repair, perform the following procedure to confirm the malfunction is eliminated.

WITH CONSULT-II

NHAT0212S01

1) Turn ignition switch ON and select “DATA MONITOR” mode for “ENGINE” with CONSULT-II.
2) Start engine and maintain the following conditions for at least 10 consecutive seconds.
   VHCL SPEED SE: 10 km/h (6 MPH) or more
   THRTL POS SEN: More than 1.2V
   Selector lever: D position

WITH GST

NHAT0212S02

Follow the procedure “With CONSULT-II”.

Wiring Diagram — AT — ENGSS

NHAT0044

AT-ENGSS-01

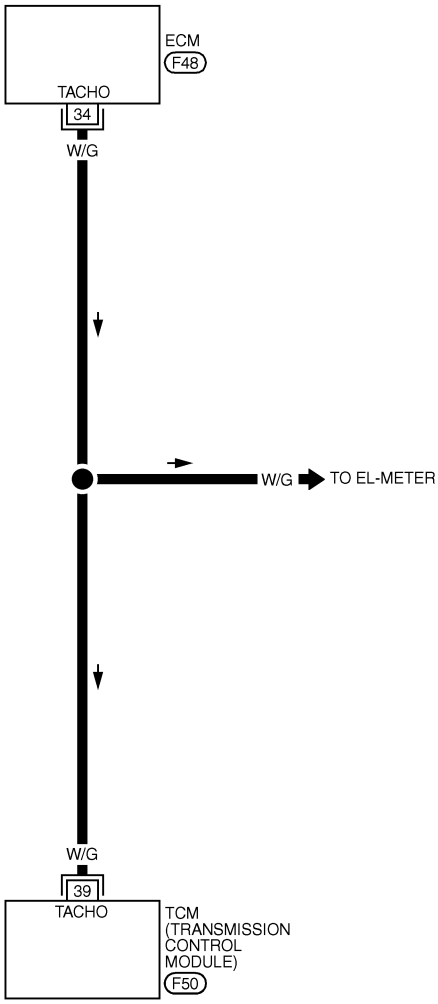

: DETECTABLE LINE FOR DTC
: NON-DETECTABLE LINE FOR DTC

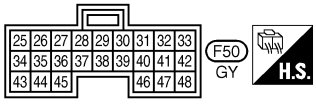

REFER TO THE FOLLOWING.
F48 - ELECTRICAL UNITS

MAT475B

Diagnostic Procedure

NHAT0045

1	CHECK DTC WITH ECM
● Check P code with CONSULT-II “ENGINE”. Turn ignition switch ON and select “SELF-DIAGNOSTIC RESULTS” mode for “ENGINE” with CONSULT-II. Refer to EC-90, “MALFUNCTION Indicator Lamp (MIL)”.	
OK or NG	
OK (with CONSULT-II) ▶	GO TO 2.
OK (without CONSULT-II) ▶	GO TO 4.
NG ▶	Check ignition signal circuit for engine control. Refer to EC-685, “IGNITION SIGNAL”.

2	CHECK INPUT SIGNAL (With CONSULT-II)
With CONSULT-II 1. Start engine. 2. Select “TCM INPUT SIGNALS” in “DATA MONITOR” mode for “A/T” with CONSULT-II. 3. Read out the value of “ENGINE SPEED”. Check engine speed changes according to throttle position.	

DATA MONITOR	
MONITORING	
ENGINE SPEED	XXX rpm
TURBINE REV	XXX rpm
OVERDRIVE SW	ON
PN POSI SW	OFF
R POSITION SW	OFF

SAT645J

OK or NG	
OK ▶	GO TO 5.
NG ▶	GO TO 3.

3	DETECT MALFUNCTIONING ITEM
Check the following items: ● Harness for short or open between TCM and ECM ● Resistor and ignition coil Refer to EC-685, “IGNITION SIGNAL”.	
OK or NG	
OK ▶	GO TO 5.
NG ▶	Repair or replace damaged parts.

4	CHECK INPUT SIGNAL (Without CONSULT-II)

Without CONSULT-II

1. Start engine.
2. Check voltage between TCM harness connector F50 terminal 39 (W/G) and ground.

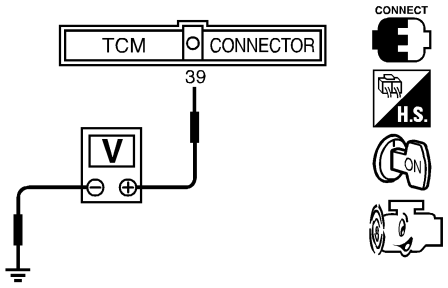

SAT520JD

Voltage:
Refer to EC-137, "ECM INSPECTION TABLE".

OK or NG

OK	▶	GO TO 5.
NG	▶	GO TO 3.

5	CHECK DTC

Perform Diagnostic Trouble Code (DTC) confirmation procedure, AT-126.

OK or NG

OK	▶	**INSPECTION END**
NG	▶	GO TO 6.

6	CHECK TCM INSPECTION

1. Perform TCM input/output signal inspection.
2. If NG, recheck TCM pin terminals for damage or loose connection with harness connector.

OK or NG

OK	▶	**INSPECTION END**
NG	▶	Repair or replace damaged parts.

Description

NHAT0046

- This malfunction will not be detected while the A/T CHECK indicator lamp is indicating another self-diagnosis malfunction.
- This malfunction is detected when the A/T does not shift into first gear position as instructed by the TCM. This is not caused by electrical malfunction (circuits open or shorted) but by mechanical malfunction such as control valve sticking, improper solenoid valve operation, etc.

Gear position	1	2	3	4
Shift solenoid valve A	ON (Closed)	OFF (Open)	OFF (Open)	ON (Closed)
Shift solenoid valve B	ON (Closed)	ON (Closed)	OFF (Open)	OFF (Open)

TCM TERMINALS AND REFERENCE VALUE

NHAT0046S01

Remarks: Specification data are reference values.

Terminal No.	Wire color	Item	Condition		Judgement standard (Approx.)
11	R/Y	Shift solenoid valve A		When shift solenoid valve A operates. (When driving in D_1 or D_4.)	Battery voltage
				When shift solenoid valve A does not operate. (When driving in D_2 or D_3.)	0V
12	LG/B	Shift solenoid valve B		When shift solenoid valve B operates. (When driving in D_1 or D_2.)	Battery voltage
				When shift solenoid valve B does not operate. (When driving in D_3 or D_4.)	0V

On Board Diagnosis Logic

NHAT0213

This diagnosis monitors actual gear position by checking the torque converter slip ratio calculated by TCM as follows:
Torque converter slip ratio = A x C/B
A: Output shaft revolution signal from revolution sensor
B: Engine speed signal from ECM
C: Gear ratio determined as gear position which TCM supposes
If the actual gear position is higher than the position (1st) supposed by TCM, the slip ratio will be more than normal. In case the ratio exceeds the specified value, TCM judges this diagnosis malfunction.
This malfunction will be caused when either shift solenoid valve A is stuck open or shift solenoid valve B is stuck open.
Gear positions supposed by TCM are as follows.
In case of gear position with no malfunctions: **1**, 2, 3 and 4 positions
In case of gear position with shift solenoid valve A stuck open: **2***, 2, 3 and 3 positions
In case of gear position with shift solenoid valve B stuck open: **4***, 3, 3 and 4 positions to each gear position above
*: P0731 is detected.
Diagnostic trouble code A/T 1ST GR FNCTN with CONSULT-II or P0731 without CONSULT-II is detected when A/T cannot be shifted to the 1st gear position even if electrical circuit is good.

Possible Cause

NHAT0214

Check the following items.

- Shift solenoid valve A
- Shift solenoid valve B
- Each clutch
- Hydraulic control circuit

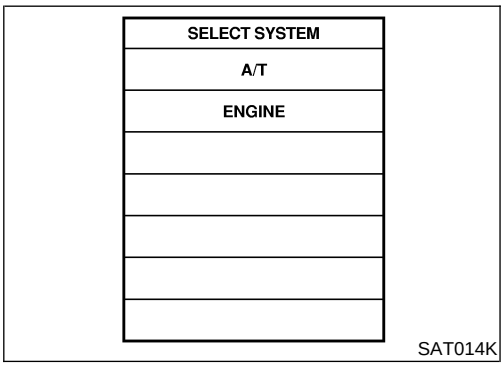

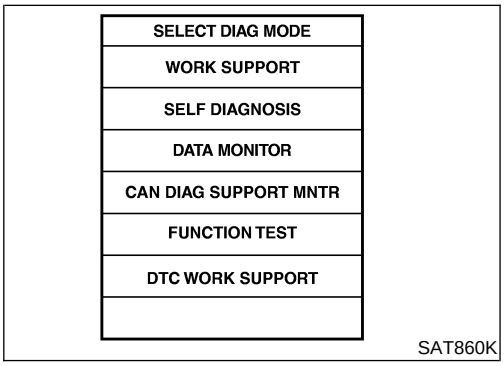

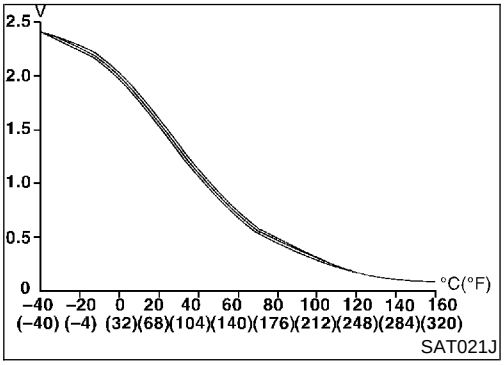

Diagnostic Trouble Code (DTC) Confirmation Procedure

NHAT0215

CAUTION:

- **Always drive vehicle at a safe speed.**
- **Be careful not to rev engine into the red zone on the tachometer.**

NOTE:

If "DTC Confirmation Procedure" has been previously conducted, always turn ignition switch OFF and wait at least 10 seconds before conducting the next test.

TESTING CONDITION:

Always drive vehicle on a level road to improve the accuracy of test.

After the repair, perform the following procedure to confirm the malfunction is eliminated.

WITH CONSULT-II

NHAT0215S01

1) Start engine and select "DATA MONITOR" mode for "A/T" with CONSULT-II.
2) Make sure that output voltage of A/T fluid temperature sensor is within the range below.
   FLUID TEMP SEN: 0.4 - 1.5V
   If out of range, drive the vehicle to decrease the voltage (warm up the fluid) or stop engine to increase the voltage (cool down the fluid).
3) Select "1ST GR FNCTN P0731" of "DTC WORK SUPPORT" mode for "A/T" with CONSULT-II and touch "START".
4) Accelerate vehicle to 20 to 25 km/h (12 to 16 MPH) under the following condition and release the accelerator pedal completely.
   THROTTLE POSI: Less than 1.0/8 (at all times during step 4)
   Selector lever: D position

- **Check that "GEAR" shows "2" after releasing pedal.**

5) Depress accelerator pedal to WOT (more than 7.0/8 of "THROTTLE POSI") quickly from a speed of 20 to 25 km/h (12 to 16 MPH) until "TESTING" changes to "STOP VEHICLE" or "COMPLETED". (It will take approximately 3 seconds.)
   If the check result NG appears on CONSULT-II screen, go to "DIAGNOSTIC PROCEDURE", AT-134.
   If "STOP VEHICLE" appears on CONSULT-II screen, go to the following step.

- **Check that "GEAR" shows "1" when depressing accelerator pedal to WOT.**
- **If "TESTING" does not appear on CONSULT-II for a long time, select "SELF-DIAG RESULTS" for "ENGINE". In case**

a 1st trip DTC other than P0731 is shown, refer to applicable "TROUBLE DIAGNOSIS FOR DTC".

6) Stop vehicle.
7) Follow the instruction displayed. (Check for normal shifting referring to the table below.)

Vehicle condition	Gear on actual transmission shift pattern when screen is changed to 1 → 2 → 3 → 4
No malfunction exists.	1 → 2 → 3 → 4
Malfunction for P0731 exists.	2 → 2 → 3 → 3
	4 → 3 → 3 → 4

8) Make sure that "OK" is displayed. (If "NG" is displayed, refer to "DIAGNOSTIC PROCEDURE".)
Refer to AT-134, "DIAGNOSTIC PROCEDURE".
Refer to AT-381, "Shift Schedule".

WITH GST

NHAT0215S02

Follow the procedure "With CONSULT-II".

Wiring Diagram — AT — 1ST

NHAT0047

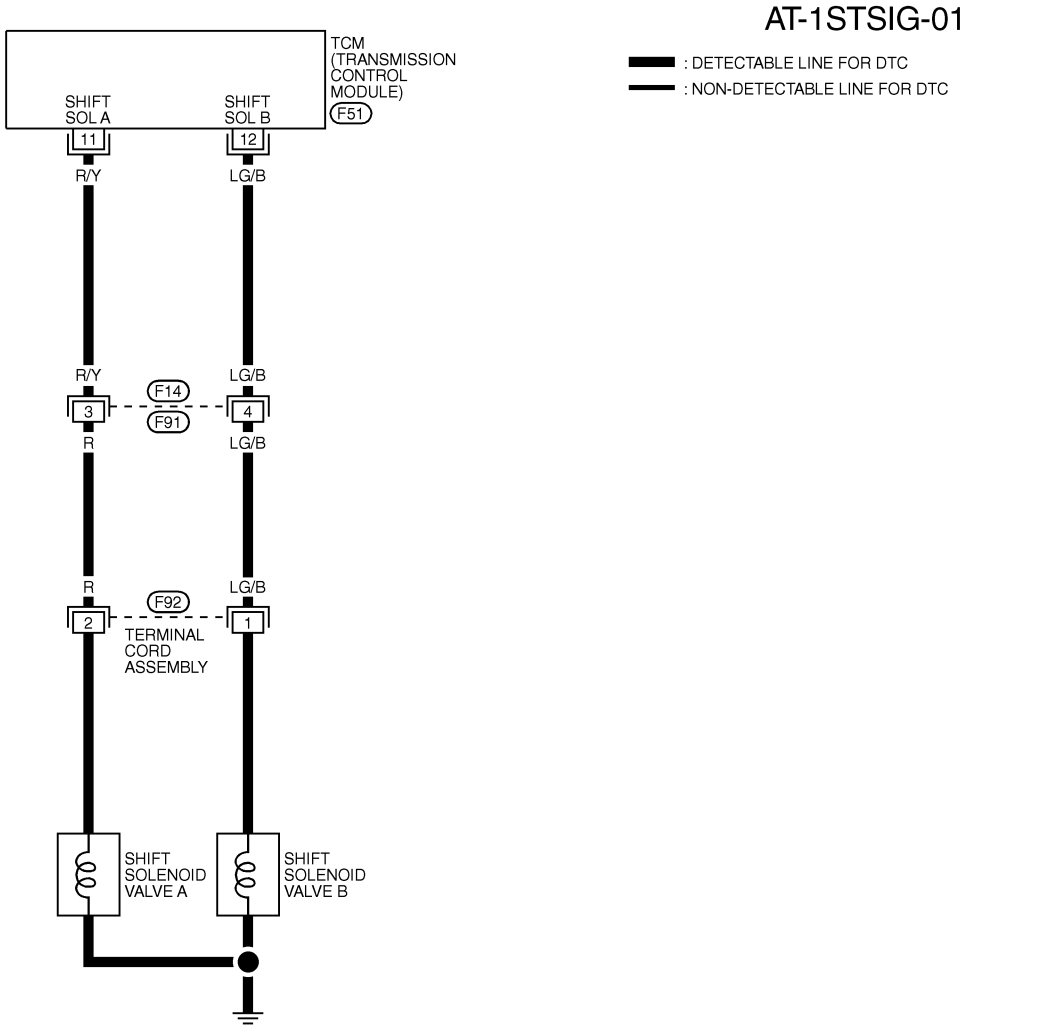

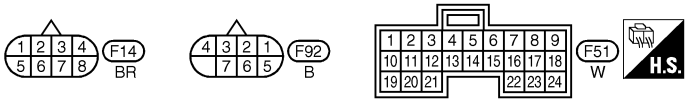

MAT476B

Diagnostic Procedure

NHAT0048

1	CHECK SHIFT SOLENOID VALVE RESISTANCE

1. Remove control valve assembly. Refer to AT-282.
- Shift solenoid valve A
- Shift solenoid valve B

2. Check resistance between two terminals.

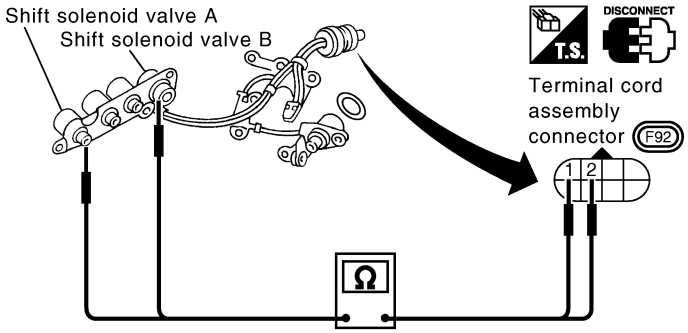

Solenoid valve	Terminal No. (Wire color)		Resistance (Approx.)
Shift solenoid valve A	2 (R)	Ground	20 - 30 Ω
Shift solenoid valve B	1 (LG/B)		5 - 20 Ω

SAT822K

OK or NG

OK	▶	GO TO 2.
NG	▶	Repair or replace damaged parts.

2	CHECK SHIFT SOLENOID VALVE OPERATION

1. Remove control valve assembly. Refer to AT-282.
- Shift solenoid valve A
- Shift solenoid valve B

2. Check solenoid valve by listening for its operating sound while applying battery voltage to the terminal and ground.

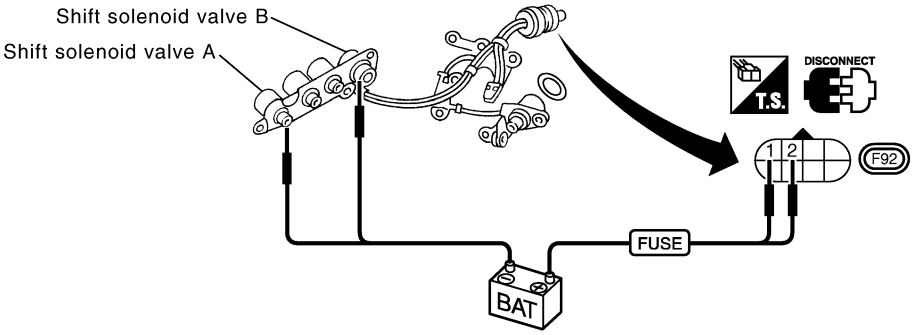

SAT823K

OK or NG

OK	▶	GO TO 3.
NG	▶	Repair or replace shift solenoid valve assembly.

3	CHECK CONTROL VALVE

1. Disassemble control valve assembly. Refer to "Control Valve Assembly", AT-282.
2. Check to ensure that:
- Valve, sleeve and plug slide along valve bore under their own weight.
- Valve, sleeve and plug are free from burrs, dents and scratches.
- Control valve springs are free from damage, deformation and fatigue.
- Hydraulic line is free from obstacles.

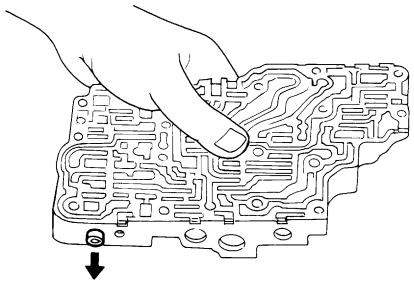

SAT367H

OK or NG

OK	▶	GO TO 4.
NG	▶	Repair control valve assembly.

4	CHECK DTC

Perform Diagnostic Trouble Code (DTC) confirmation procedure, AT-131.

OK or NG

OK	▶	**INSPECTION END**
NG	▶	Check transaxle inner parts. (Clutch, brake, etc.)

Description

NHAT0049

- This malfunction will not be detected while the A/T CHECK indicator lamp is indicating another self-diagnosis malfunction.
- This malfunction is detected when the A/T does not shift into second gear position as instructed by the TCM. This is not caused by electrical malfunction (circuits open or shorted) but by mechanical malfunction such as control valve sticking, improper solenoid valve operation, etc.

Gear position	1	2	3	4
Shift solenoid valve A	ON (Closed)	OFF (Open)	OFF (Open)	ON (Closed)
Shift solenoid valve B	ON (Closed)	ON (Closed)	OFF (Open)	OFF (Open)

TCM TERMINALS AND REFERENCE VALUE

NHAT0049S01

Remarks: Specification data are reference values.

Terminal No.	Wire color	Item	Condition		Judgement standard (Approx.)
12	LG/B	Shift solenoid valve B		When shift solenoid valve B operates. (When driving in D_1 or D_2.)	Battery voltage
				When shift solenoid valve B does not operate. (When driving in D_3 or D_4.)	0V

On Board Diagnosis Logic

NHAT0216

This diagnosis monitors actual gear position by checking the torque converter slip ratio calculated by TCM as follows:
Torque converter slip ratio = A x C/B
A: Output shaft revolution signal from revolution sensor
B: Engine speed signal from ECM
C: Gear ratio determined as gear position which TCM supposes
If the actual gear position is higher than the position (2nd) supposed by TCM, the slip ratio will be more than normal. In case the ratio exceeds the specified value, TCM judges this diagnosis malfunction.
This malfunction will be caused when shift solenoid valve B is stuck open.
Gear positions supposed by TCM are as follows.
In case of gear position with no malfunctions: 1, **2**, 3 and 4 positions
In case of gear position with shift solenoid valve B stuck open: 4, **3***, 3 and 4 positions to each gear position above
*: P0732 is detected.
Diagnostic trouble code A/T 2ND GR FNCTN with CONSULT-II or P0732 without CONSULT-II is detected when A/T cannot be shifted to the 2nd gear position even if electrical circuit is good.

Possible Cause

NHAT0217

Check the following items.

- Shift solenoid valve B
- Each clutch
- Hydraulic control circuit

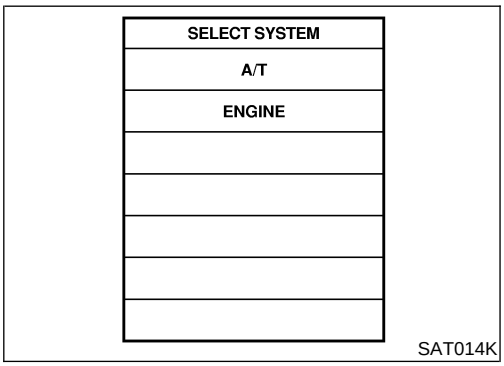

SAT014K

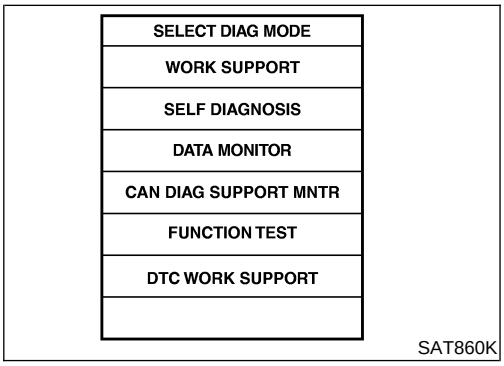

SAT860K

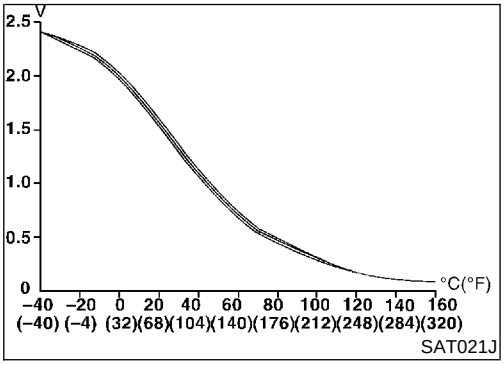

SAT021J

Diagnostic Trouble Code (DTC) Confirmation Procedure

NHAT0218

CAUTION:

- **Always drive vehicle at a safe speed.**
- **Be careful not to rev engine into the red zone on the tachometer.**

NOTE:

If "DTC Confirmation Procedure" has been previously conducted, always turn ignition switch OFF and wait at least 10 seconds before conducting the next test.

TESTING CONDITION:

Always drive vehicle on a level road to improve the accuracy of test.

After the repair, perform the following procedure to confirm the malfunction is eliminated.

WITH CONSULT-II

NHAT0218S01

1) Start engine and select "DATA MONITOR" mode for "A/T" with CONSULT-II.
2) Make sure that output voltage of A/T fluid temperature sensor is within the range below.
   FLUID TEMP SEN: 0.4 - 1.5V
   If out of range, drive the vehicle to decrease the voltage (warm up the fluid) or stop engine to increase the voltage (cool down the fluid).
3) Select "2ND GR FNCTN P0732" of "DTC WORK SUPPORT" mode for "A/T" with CONSULT-II and touch "START".
4) Accelerate vehicle to 45 to 50 km/h (28 to 31 MPH) under the following condition and release the accelerator pedal completely.
   THROTTLE POSI: Less than 1.0/8
   Selector lever: D position (O/D ON)

- **Check that "GEAR" shows "3" or "4" after releasing pedal.**

5) Depress accelerator pedal to WOT (more than 7.0/8 of "THROTTLE POSI") quickly from a speed of 45 to 50 km/h (28 to 31 MPH) until "TESTING" changes to "STOP VEHICLE" or "COMPLETE". (It will take approximately 3 seconds.)
   If the check result NG appears on CONSULT-II screen, go to "DIAGNOSTIC PROCEDURE", AT-140.
   If "STOP VEHICLE" appears on CONSULT-II screen, go to following step.

- **Check that "GEAR" shows "2" when depressing accelerator pedal to WOT.**
- **If "TESTING" does not appear on CONSULT-II for a long time, select "SELF-DIAG RESULTS" for "ENGINE". In case**

a 1st trip DTC other than P0732 is shown, refer to applicable "TROUBLE DIAGNOSIS FOR DTC".

6) Stop vehicle.
7) Follow the instruction displayed. (Check for normal shifting referring to the table below.)

Vehicle condition	Gear on actual transmission shift pattern when screen is changed to 1 → 2 → 3 → 4
No malfunction exists	1 → 2 → 3 → 4
Malfunction for P0732 exists.	4 → 3 → 3 → 4

8) Make sure that "OK" is displayed. (If "NG" is displayed, refer to "DIAGNOSTIC PROCEDURE".)
   Refer to AT-140, "DIAGNOSTIC PROCEDURE".
   Refer to AT-381, "Shift Schedule".

WITH GST

NHAT0218S02

Follow the procedure "With CONSULT-II".

Wiring Diagram — AT — 2ND

NHAT0050

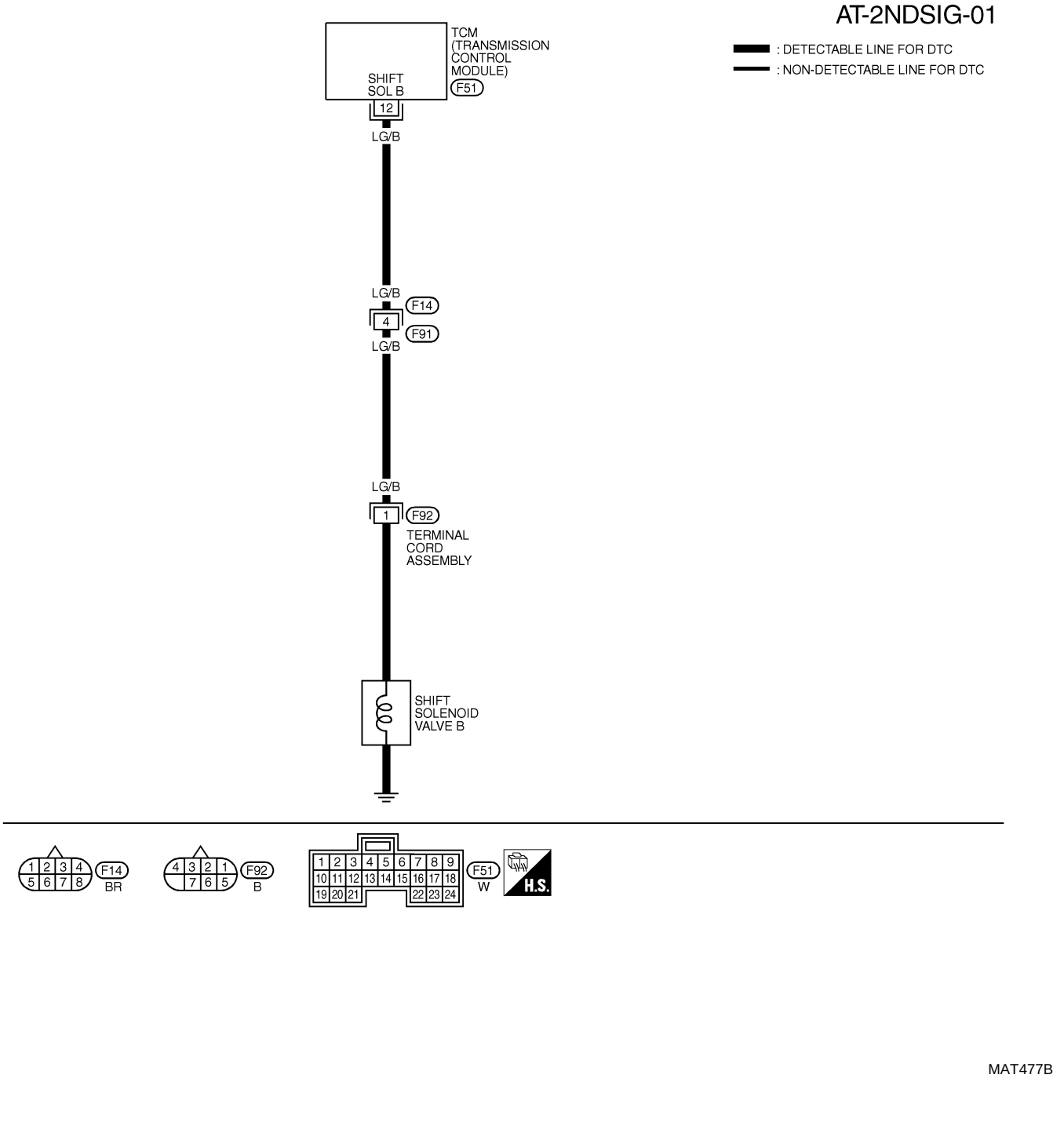

Diagnostic Procedure

NHAT0051

1	CHECK SHIFT SOLENOID VALVE RESISTANCE

1. Remove control valve assembly. Refer to AT-282.
- Shift solenoid valve B
2. Check resistance to the terminal and ground.

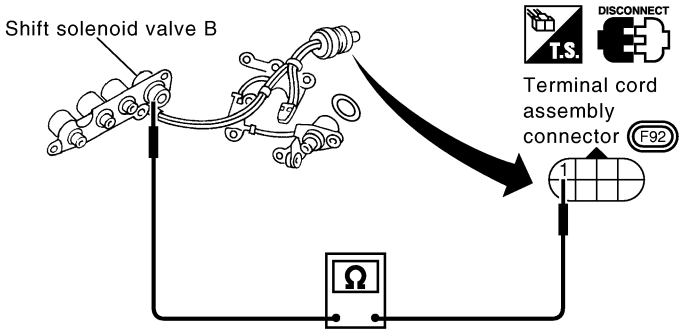

Solenoid valve	Terminal No. (Wire color)		Resistance (Approx.)
Shift solenoid valve B	1 (LG/B)	Ground	5 - 20 Ω

SAT824K

OK or NG

OK	▶	GO TO 2.
NG	▶	Repair or replace shift solenoid valve assembly.

2	CHECK SHIFT SOLENOID VALVE OPERATION

1. Remove control valve assembly. Refer to AT-282.
- Shift solenoid valve B
2. Check solenoid valve by listening for its operating sound while applying battery voltage to the terminal and ground.

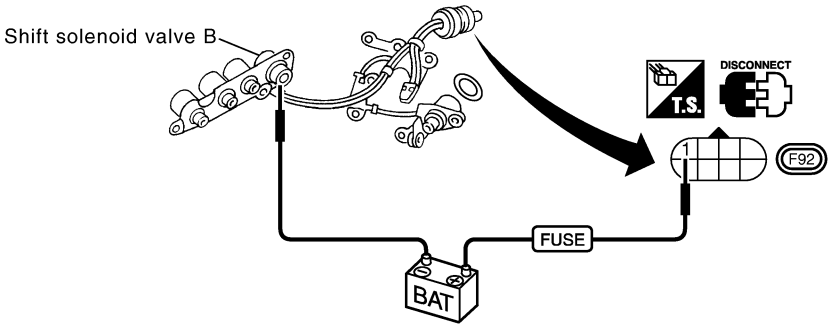

SAT825K

OK or NG

OK	▶	GO TO 3.
NG	▶	Repair or replace shift solenoid valve assembly.

3	CHECK CONTROL VALVE

1. Disassemble control valve assembly. Refer to "Control Valve Assembly", AT-314.
2. Check to ensure that:
- Valve, sleeve and plug slide along valve bore under their own weight.
- Valve, sleeve and plug are free from burrs, dents and scratches.
- Control valve springs are free from damage, deformation and fatigue.
- Hydraulic line is free from obstacles.

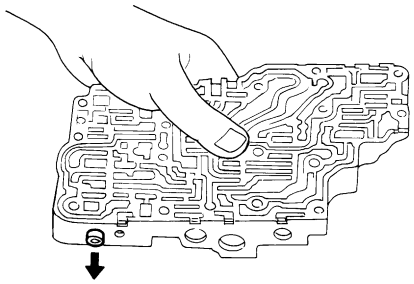

SAT367H

OK or NG

OK	▶	GO TO 4.
NG	▶	Repair control valve assembly.

4	CHECK DTC

Perform Diagnostic Trouble Code (DTC) confirmation procedure, AT-137.

OK or NG

OK	▶	**INSPECTION END**
NG	▶	Check transaxle iner parts. (Clutch, brake, etc.)

Description

NHAT0052

- This malfunction will not be detected while the A/T CHECK indicator lamp is indicating another self-diagnosis malfunction.
- This malfunction is detected when the A/T does not shift into third gear position as instructed by the TCM. This is not caused by electrical malfunction (circuits open or shorted) but by mechanical malfunction such as control valve sticking, improper solenoid valve operation, malfunctioning servo piston or brake band, etc.

Gear position	1	2	3	4
Shift solenoid valve A	ON (Closed)	OFF (Open)	OFF (Open)	ON (Closed)
Shift solenoid valve B	ON (Closed)	ON (Closed)	OFF (Open)	OFF (Open)

TCM TERMINALS AND REFERENCE VALUE

NHAT0052S01

Remarks: Specification data are reference values.

Terminal No.	Wire color	Item	Condition		Judgement standard (Approx.)
11	R/Y	Shift solenoid valve A		When shift solenoid valve A operates. (When driving in D_1 or D_4.)	Battery voltage
				When shift solenoid valve A does not operate. (When driving in D_2 or D_3.)	0V

On Board Diagnosis Logic

NHAT0219

This diagnosis monitors actual gear position by checking the torque converter slip ratio calculated by TCM as follows:
Torque converter slip ratio = A x C/B
A: Output shaft revolution signal from revolution sensor
B: Engine speed signal from ECM
C: Gear ratio determined as gear position which TCM supposes
If the actual gear position is higher than the position (3rd) supposed by TCM, the slip ratio will be more than normal. In case the ratio exceeds the specified value, TCM judges this diagnosis malfunction.
This malfunction will be caused when shift solenoid valve A is stuck closed.
Gear positions supposed by TCM are as follows.
In case of gear position with no malfunctions: 1, 2, **3** and 4 positions
In case of gear position with shift solenoid valve A stuck closed: 1, 1, **4*** and 4 positions to each gear position above
*: P0733 is detected.
Diagnostic trouble code A/T 3RD GR FNCTN with CONSULT-II or P0733 without CONSULT-II is detected when A/T cannot be shifted to the 3rd gear position even if electrical circuit is good.

Possible Cause

NHAT0220

Check the following items.

- Shift solenoid valve A
- Each clutch
- Hydraulic control circuit

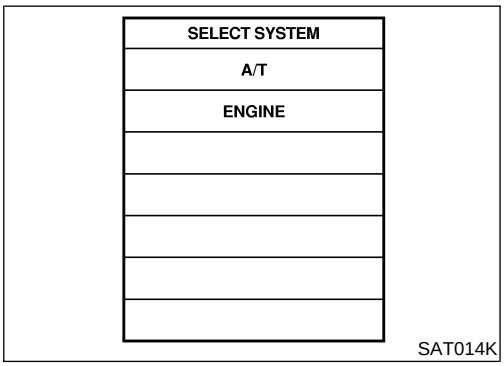

SAT014K

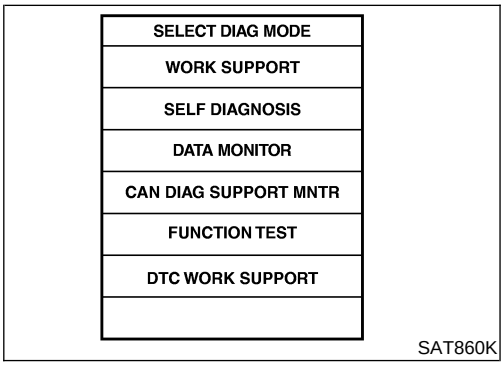

SAT860K

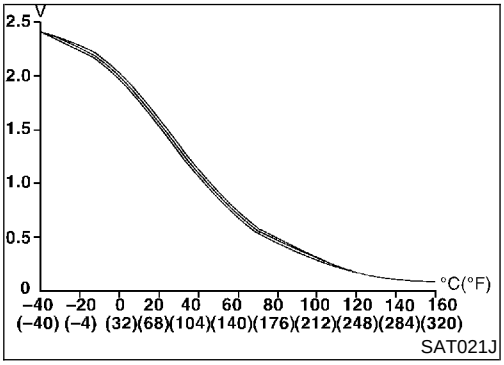

SAT021J

Diagnostic Trouble Code (DTC) Confirmation Procedure

NHAT0221

CAUTION:

- **Always drive vehicle at a safe speed.**
- **Be careful not to rev engine into the red zone on the tachometer.**

NOTE:

If "DTC Confirmation Procedure" has been previously conducted, always turn ignition switch "OFF" and wait at least 10 seconds before conducting the next test.

TESTING CONDITION:

Always drive vehicle on a level road to improve the accuracy of test.

After the repair, perform the following procedure to confirm the malfunction is eliminated.

WITH CONSULT-II

NHAT0221S01

1) Start engine and select "DATA MONITOR" mode for "A/T" with CONSULT-II.
2) Make sure that output voltage of A/T fluid temperature sensor is within the range below.
   FLUID TEMP SEN: 0.4 - 1.5V
   If out of range, drive the vehicle to decrease the voltage (warm up the fluid) or stop engine to increase the voltage (cool down the fluid).
3) Select "3RD GR FNCTN P0733" of "DTC WORK SUPPORT" mode for "A/T" with CONSULT-II and touch "START".
4) Accelerate vehicle to 60 to 75 km/h (37 to 47 MPH) under the following condition and release the accelerator pedal completely.
   THROTTLE POSI: Less than 1.0/8 (at all times during step 4)
   Selector lever: D position

- **Check that "GEAR" shows "4" after releasing pedal.**

5) Depress accelerator pedal steadily with 3.5/8 - 4.5/8 of "THROTTLE POSI" from a speed of 60 to 75 km/h (37 to 47 MPH) until "TESTING" changes to "STOP VEHICLE" or "COMPLETED". (It will take approximately 3 seconds.)
   If the check result NG appears on CONSULT-II screen, go to "DIAGNOSTIC PROCEDURE", AT-146.
   If "STOP VEHICLE" appears on CONSULT-II screen, go to following step.

- **Check that "GEAR" shows "3" when depressing accelerator pedal with 3.5/8 - 4.5/8 of "THROTTLE POSI".**
- **If "TESTING" does not appear on CONSULT-II for a long time, select "SELF-DIAG RESULTS" for "ENGINE". In case**

a 1st trip DTC other than P0733 is shown, refer to applicable "TROUBLE DIAGNOSIS FOR DTC".

6) Stop vehicle.
7) Follow the instruction displayed. (Check for normal shifting referring to the table below.)

Vehicle condition	Gear on actual transmission shift pattern when screen is changed to 1 → 2 → 3 → 4
No malfunction exists.	1 → 2 → 3 → 4
Malfunction for P0733 exists.	1 → 1 → 4 → 4

8) Make sure that "OK" is displayed. (If "NG" is displayed, refer to "DIAGNOSTIC PROCEDURE".)
   Refer to AT-146, "DIAGNOSTIC PROCEDURE".
   Refer to AT-381, "Shift Schedule".

WITH GST

NHAT0221S02

Follow the procedure "With CONSULT-II".

Wiring Diagram — AT — 3RD

NHAT0053

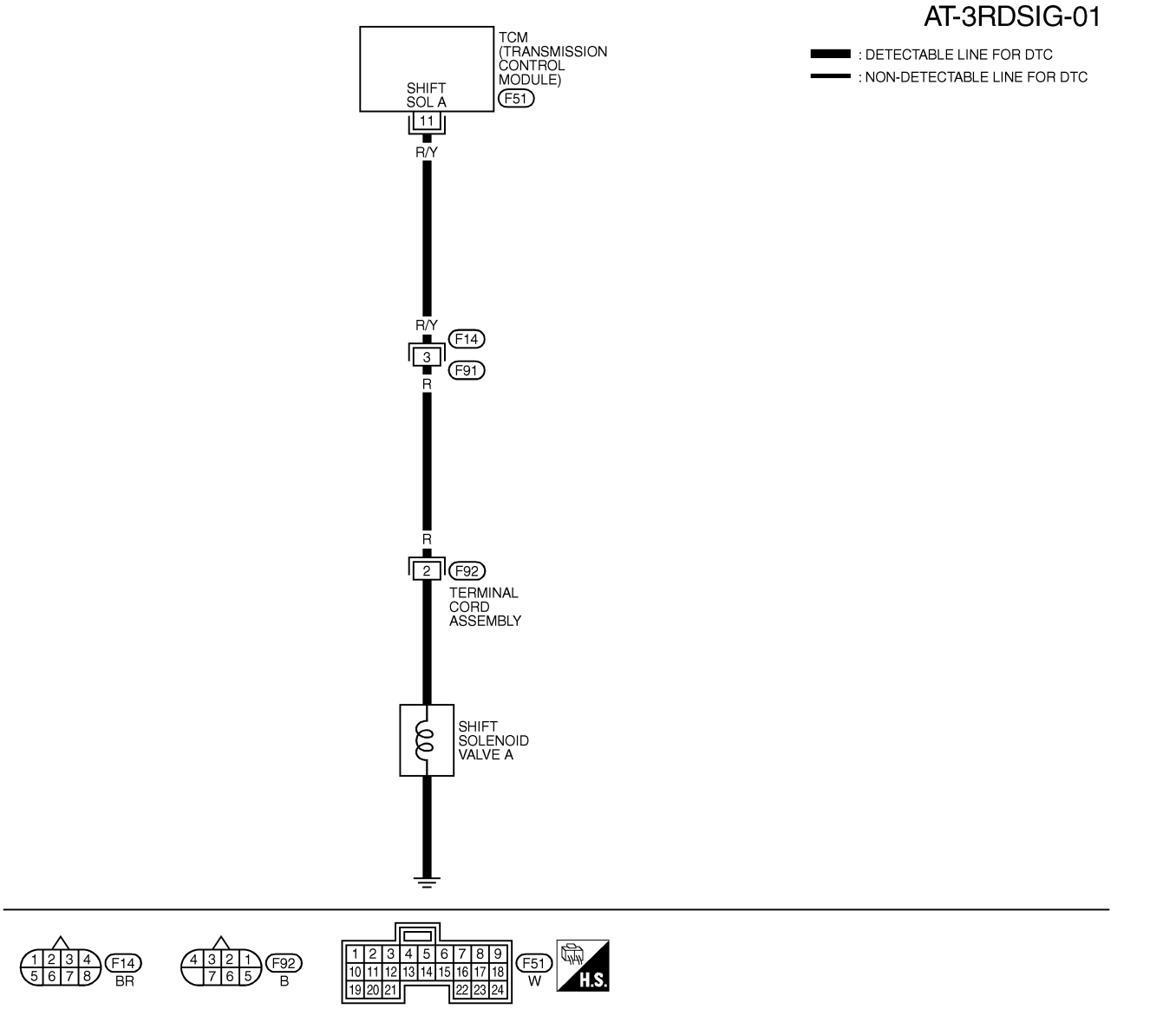

Diagnostic Procedure

NHAT0054

1	CHECK SHIFT SOLENOID VALVE RESISTANCE

1. Remove control valve assembly. Refer to AT-282.
- Shift solenoid valve A
2. Check resistance to the terminal and ground.

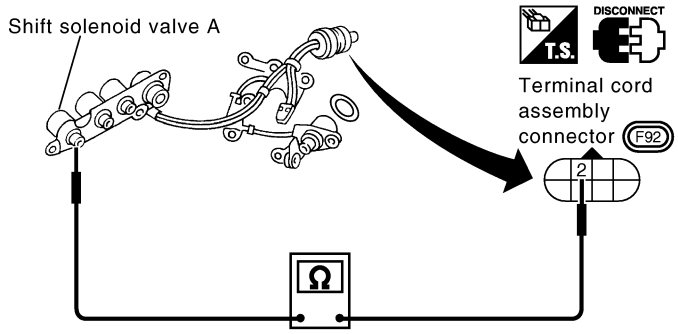

Solenoid valve	Terminal No. (Wire color)		Resistance (Approx.)
Shift solenoid valve A	2 (R)	Ground	20 - 30 Ω

SAT826K

OK or NG

OK	▶	GO TO 2.
NG	▶	Repair or replace shift solenoid valve assembly.

2	CHECK SHIFT SOLENOID VALVE OPERATION

1. Remove control valve assembly. Refer to AT-282.
- Shift solenoid valve A
2. Check solenoid valve by listening for its operating sound while applying battery voltage to the terminal and ground.

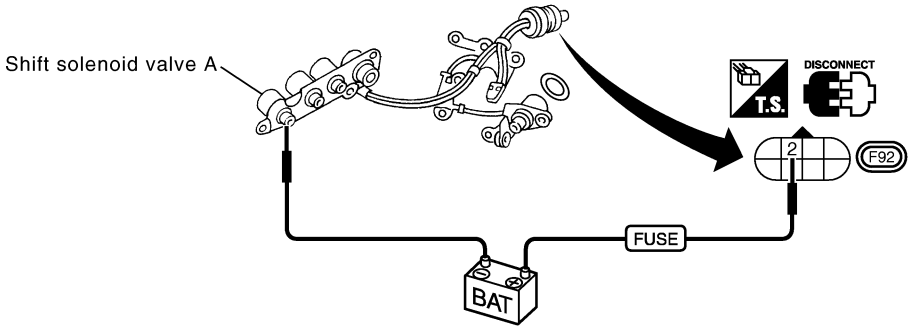

SAT827K

OK or NG

OK	▶	GO TO 3.
NG	▶	Repair or replace shift solenoid valve assembly.

3	CHECK CONTROL VALVE

1. Disassemble control valve assembly. Refer to "Control Valve Assembly", AT-314.
2. Check to ensure that:
- Valve, sleeve and plug slide along valve bore under their own weight.
- Valve, sleeve and plug are free from burrs, dents and scratches.
- Control valve springs are free from damage, deformation and fatigue.
- Hydraulic line is free from obstacles.

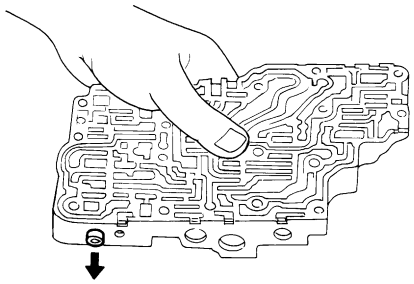

SAT367H

OK or NG

OK	▶	GO TO 4.
NG	▶	Repair control valve assembly.

4	CHECK DTC

Perform Diagnostic Trouble Code (DTC) confirmation procedure, AT-143.

OK or NG

OK	▶	**INSPECTION END**
NG	▶	Check transaxle inner parts. (Clutch, brake, etc.)

Description

NHAT0055

- This malfunction will not be detected while the A/T CHECK indicator lamp is indicating another self-diagnosis malfunction.
- This malfunction is detected when the A/T does not shift into fourth gear position or line pressure is low as instructed by the TCM. This is not caused by electrical malfunction (circuits open or shorted) but by mechanical malfunction such as control valve sticking, improper solenoid valve operation, malfunctioning oil pump or torque converter clutch, etc.

Gear position	1	2	3	4
Shift solenoid valve A	ON (Closed)	OFF (Open)	OFF (Open)	ON (Closed)
Shift solenoid valve B	ON (Closed)	ON (Closed)	OFF (Open)	OFF (Open)

CONSULT-II REFERENCE VALUE IN DATA MONITOR MODE

NHAT0055S01

Remarks: Specification data are reference values.

Monitor item	Condition	Specification
Torque converter clutch solenoid valve duty	Lock-up OFF ↓ Lock-up ON	Approximately 4% ↓ Approximately 94%
Line pressure solenoid valve duty	Small throttle opening (Low line pressure) ↓ Large throttle opening (High line pressure)	Approximately 24% ↓ Approximately 95%

TCM TERMINALS AND REFERENCE VALUE

NHAT0055S02

Remarks: Specification data are reference values.

Terminal No.	Wire color	Item	Condition		Judgement standard (Approx.)
1	G/R	Line pressure solenoid valve		When releasing accelerator pedal after warming up engine.	1.5 - 3.0V
				When depressing accelerator pedal fully after warming up engine.	0V
2	W/B	Line pressure solenoid valve (with dropping resistor)		When releasing accelerator pedal after warming up engine.	4 - 14V
				When depressing accelerator pedal fully after warming up engine.	0V
11	R/Y	Shift solenoid valve A		When shift solenoid valve A operates. (When driving in D_1 or D_4.)	Battery voltage
				When shift solenoid valve A does not operate. (When driving in D_2 or D_3.)	0V
12	LG/B	Shift solenoid valve B		When shift solenoid valve B operates. (When driving in D_1 or D_2.)	Battery voltage
				When shift solenoid valve B does not operate. (When driving in D_3 or D_4.)	0V

On Board Diagnosis Logic

NHAT0222

This diagnosis monitors actual gear position by checking the torque converter slip ratio calculated by TCM as follows:
Torque converter slip ratio = A x C/B
A: Output shaft revolution signal from revolution sensor
B: Engine speed signal from ECM
C: Gear ratio determined as gear position which TCM supposes
If the actual gear position is much lower than the position (4th) supposed by TCM, the slip ratio will be much less than normal. In case the ratio does not reach the specified value, TCM judges this diagnosis malfunction.
This malfunction will be caused when shift solenoid valve A is stuck open or shift solenoid valve B is stuck closed.
Gear positions supposed by TCM are as follows.
In case of gear position with no malfunctions: 1, 2, 3 and **4** positions
In case of gear position with shift solenoid valve A stuck open: 2, 2, 3 and **3*** positions
In case of gear position with shift solenoid valve B stuck closed: 1, 2, 2 and **1*** positions to each gear position above
*: P0734 is detected.
And also, this malfunction will be caused when line pressure is lower than normal such as when line pressure solenoid valve is stuck open.
Diagnostic trouble code A/T 4TH GR FNCTN with CONSULT-II or P0734 without CONSULT-II is detected when A/T cannot be shifted to the 4th gear position even if electrical circuit is good.

Possible Cause

NHAT0223

Check the following items.

- Shift solenoid valve A
- Shift solenoid valve B
- Line pressure solenoid valve
- Each clutch
- Hydraulic control circuit

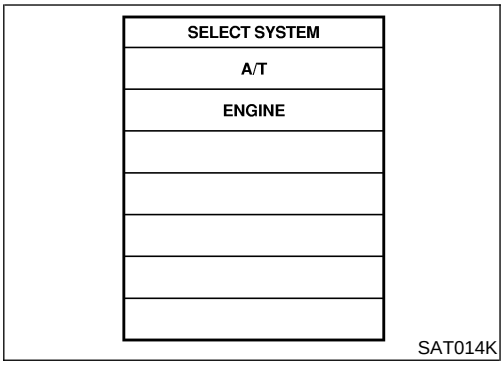

SAT014K

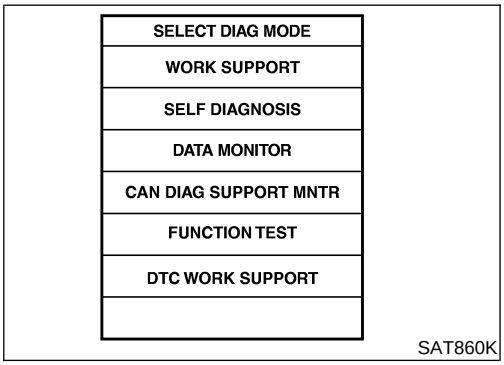

SAT860K

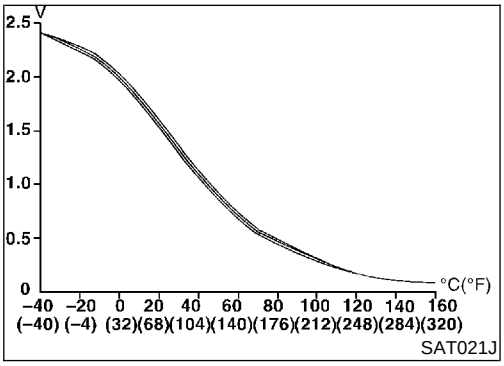

SAT021J

Diagnostic Trouble Code (DTC) Confirmation Procedure

NHAT0224

CAUTION:

- **Always drive vehicle at a safe speed.**
- **If conducting this "DTC CONFIRMATION PROCEDURE" again, always turn ignition switch OFF and wait at least 10 seconds before continuing.**
- **Be careful not to rev engine into the red zone on the tachometer.**

NOTE:
If "DTC Confirmation Procedure" has been previously conducted, always turn ignition switch OFF and wait at least 10 seconds before conducting the next test.

TESTING CONDITION:
Always drive vehicle on a level road to improve the accuracy of test.
After the repair, perform the following procedure to confirm the malfunction is eliminated.

WITH CONSULT-II

NHAT0224S01

1) Start engine and select "DATA MONITOR" mode for "A/T" with CONSULT-II.
2) Make sure that output voltage of A/T fluid temperature sensor is within the range below.
   FLUID TEMP SEN: 0.4 - 1.5V
   If out of range, drive the vehicle to decrease the voltage (warm up the fluid) or stop engine to increase the voltage (cool down the fluid).
3) Select "4TH GR FNCTN P0734" of "DTC WORK SUPPORT" mode for "A/T" with CONSULT-II and touch "START".
4) Accelerate vehicle to 55 to 65 km/h (34 to 40 MPH) under the following condition and release the accelerator pedal completely.
   THROTTLE POSI: Less than 5.5/8 (at all times during step 4)
   Selector lever: D position

- **Check that "GEAR" shows "3" after releasing pedal.**

5) Depress accelerator pedal steadily with 1.0/8 - 2.0/8 of "THROTTLE POSI" from a speed of 55 to 65 km/h (34 to 40 MPH) until "TESTING" has turned to "STOP VEHICLE" or "COMPLETED". (It will take approximately 3 seconds.)
   If the check result NG appears on CONSULT-II screen, go to "DIAGNOSTIC PROCEDURE", AT-153.
   If "STOP VEHICLE" appears on CONSULT-II screen, go to following step.

- **Check that "GEAR" shows "4" when depressing accelerator pedal with 1.0/8 - 2.0/8 of "THROTTLE POSI".**
- **If "TESTING" does not appear on CONSULT-II for a long time, select "SELF-DIAG RESULTS" for "ENGINE". In case a 1st trip DTC other than P0734 is shown, refer to applicable "TROUBLE DIAGNOSIS FOR DTC".**

6) Stop vehicle.
7) Follow the instruction displayed. (Check for normal shifting referring to the table below.)

Vehicle condition	Gear on actual transmission shift pattern when screen is changed to 1 → 2 → 3 → 4
No malfunction exists	1 → 2 → 3 → 4
Malfunction for P0734 exists.	2 → 2 → 3 → 3
	1 → 2 → 2 → 1

8) Make sure that "OK" is displayed. (If "NG" is displayed, refer to "DIAGNOSTIC PROCEDURE".)
   Refer to AT-153, "DIAGNOSTIC PROCEDURE".
   Refer to AT-381, "Shift Schedule".

WITH GST

NHAT0224S02

Follow the procedure "With CONSULT-II".

Wiring Diagram — AT — 4TH

NHAT0056

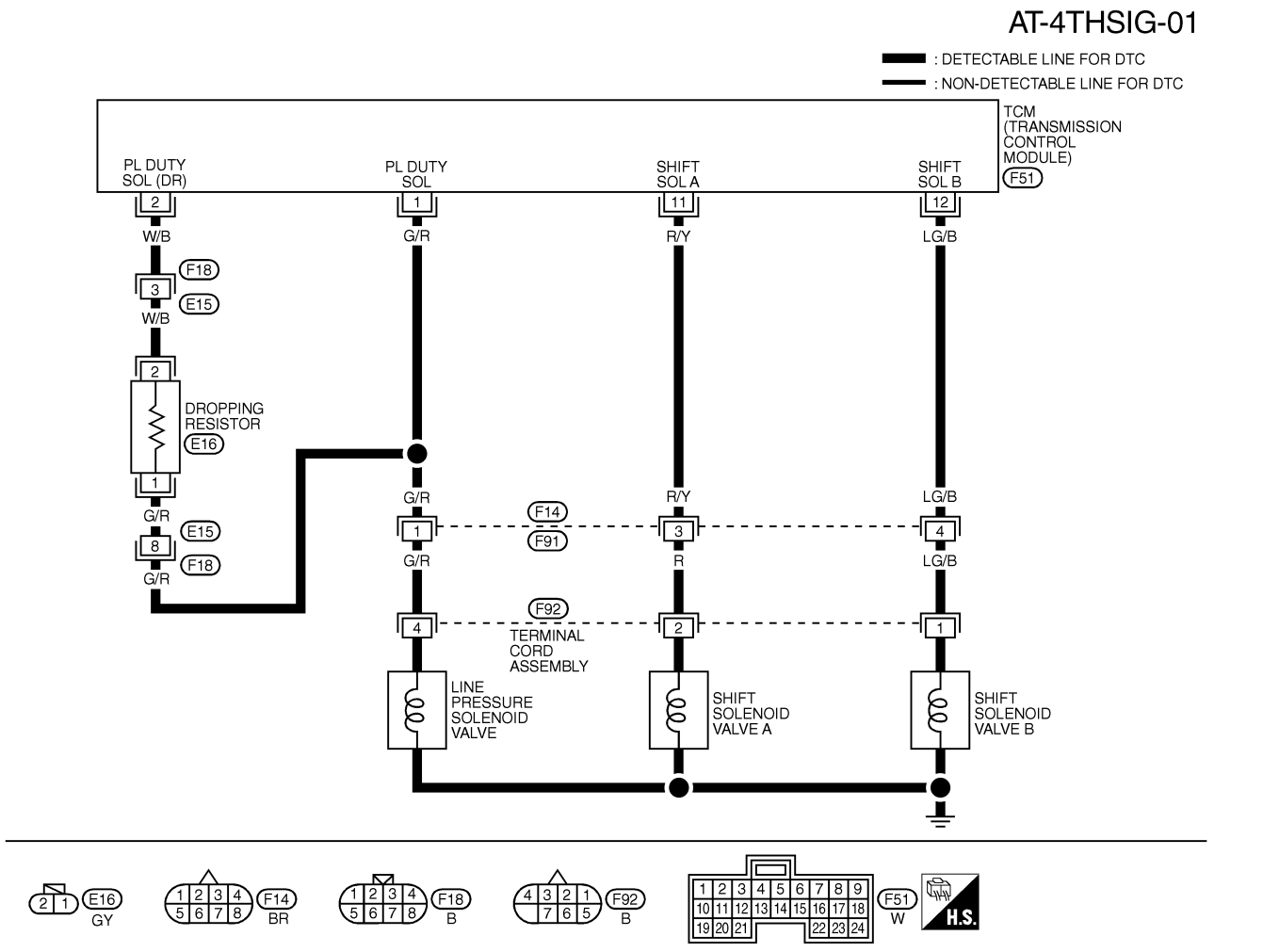

MAT479B

Diagnostic Procedure

NHAT0057

1	CHECK SHIFT UP (D_3 TO D_4)

During “Cruise test − Part 1” (AT-77), does A/T shift from D_3 to D_4 at the specified speed?

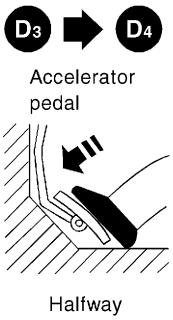

SAT988H

Yes or No

Yes	▶	GO TO 11.
No	▶	GO TO 2.

2	CHECK LINE PRESSURE

Perform line pressure test.
Refer to AT-68.

Engine speed rpm	Line pressure kPa (kg/cm², psi)	
	D, 2 and 1 positions	R position
Idle	500 (5.1, 73)	778 (7.9, 113)
Stall	1,233 (12.6, 179)	1,918 (19.6, 278)

MTBL1183

OK or NG

OK	▶	GO TO 3.
NG	▶	GO TO 7.

3	CHECK SHIFT SOLENOID VALVE RESISTANCE

1. Remove control valve assembly. Refer to AT-282.
- Shift solenoid valve A
- Shift solenoid valve B
2. Check resistance between two terminals.

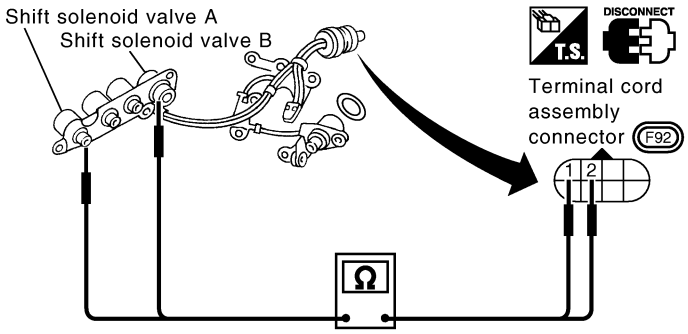

Solenoid valve	Terminal No. (Wire color)		Resistance (Approx.)
Shift solenoid valve A	2 (R)	Ground	20 - 30 Ω
Shift solenoid valve B	1 (LG/B)		5 - 20 Ω

SAT822K

OK or NG

OK	▶	GO TO 4.
NG	▶	Replace shift solenoid valve assembly.

4	CHECK SHIFT SOLENOID VALVE OPERATION

1. Remove control valve assembly. Refer to AT-282.
- Shift solenoid valve A
- Shift solenoid valve B

2. Check solenoid valve by listening for its operating sound while applying battery voltage to the terminal and ground.

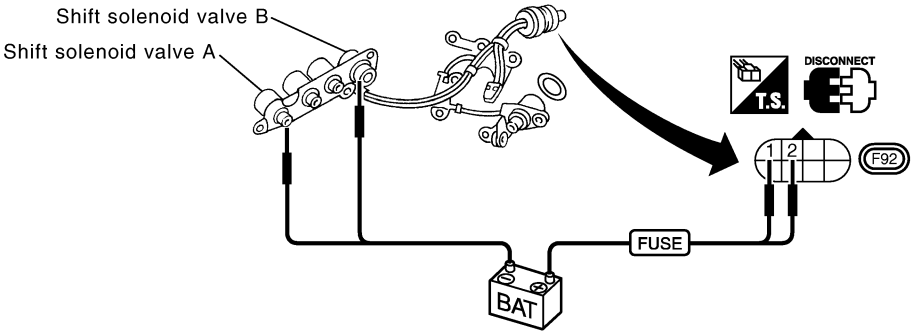

SAT823K

OK or NG

OK	▶	GO TO 5.
NG	▶	Replace shift solenoid valve assembly.

5	CHECK CONTROL VALVE

1. Disassemble control valve assembly. Refer to AT-314.
2. Check to ensure that:
- Valve, sleeve and plug slide along valve bore under their own weight.
- Valve, sleeve and plug are free from burrs, dents and scratches.
- Control valve springs are free from damage, deformation and fatigue.
- Hydraulic line is free from obstacles.

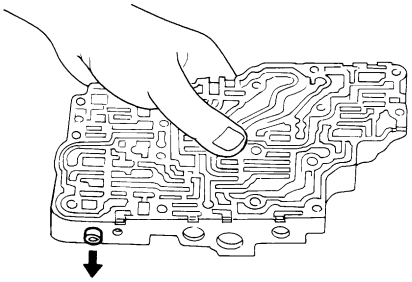

SAT367H

OK or NG

OK	▶	GO TO 6.
NG	▶	Repair control valve.

6	CHECK SHIFT UP (D_3 TO D_4)

Does A/T shift from D_3 to D_4 at the specified speed?

OK or NG

OK	▶	GO TO 11.
NG	▶	Check transaxle inner parts. (Clutch, brake, etc.)

7	CHECK SOLENOID VALVE RESISTANCE

1. Remove control valve assembly. Refer to AT-282.
- Line pressure solenoid valves
2. Check resistance to the terminal and ground.

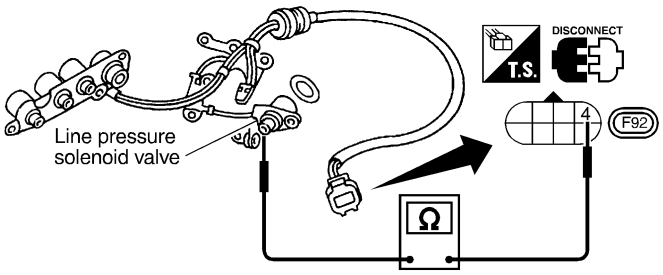

Solenoid valve	Terminal No. (Wire color)		Resistance
Line pressure solenoid valve	4 (G/R)	Ground	2.5 - 5Ω

SAT625JB

OK or NG

OK	▶	GO TO 8.
NG	▶	Replace solenoid valve assembly.

8	CHECK SOLENOID VALVE OPERATION

1. Remove control valve assembly. Refer to AT-282.
- Line pressure solenoid valves
2. Check solenoid valve by listening for its operating sound while applying battery voltage to the terminal and ground.

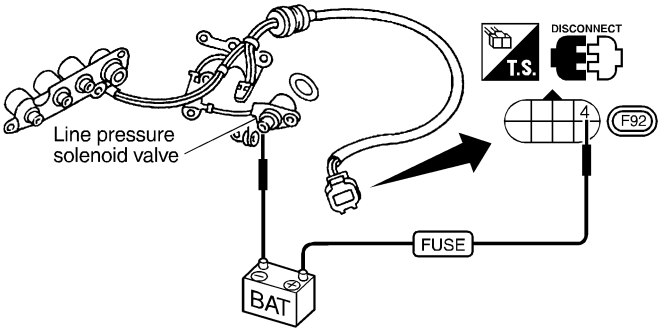

SAT626J

OK or NG

OK	▶	GO TO 9.
NG	▶	Replace solenoid valve assembly.

9	CHECK CONTROL VALVE	
1. Disassemble control valve assembly. Refer to AT-314. 2. Check line pressure circuit valves for sticking. ● Pressure regulator valve ● Pilot valve ● Pressure modifier valve 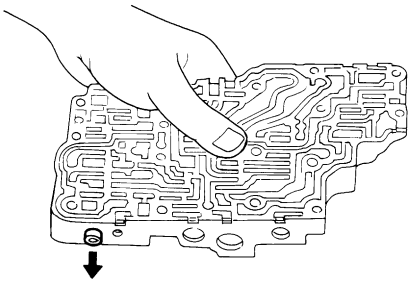 SAT367H		
OK or NG		
OK	▶	GO TO 10.
NG	▶	Repair control valve.

10	CHECK SHIFT UP (D_3 TO D_4)	
Does A/T shift from D_3 to D_4 at the specified speed?		
OK or NG		
OK	▶	GO TO 11.
NG	▶	Check transaxle inner parts. (Clutch, brake, etc.)

11	CHECK DTC	
Perform Diagnostic Trouble Code (DTC) confirmation procedure, AT-150.		
OK or NG		
OK	▶	**INSPECTION END**
NG	▶	Perform "Cruise test — Part 1" again and return to the start point of this test group.

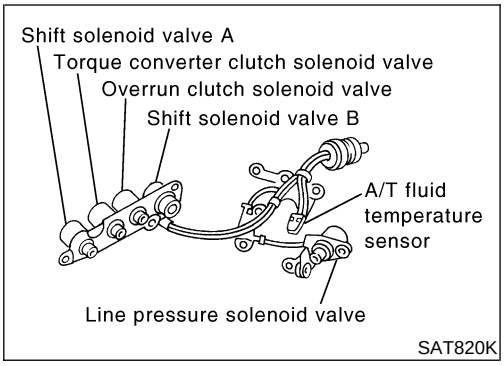

Description

NHAT0058

The torque converter clutch solenoid valve is activated, with the gear in D_4, by the TCM in response to signals sent from the vehicle speed and throttle position sensors. Lock-up piston operation will then be controlled.
Lock-up operation, however, is prohibited when A/T fluid temperature is too low.
When the accelerator pedal is depressed (less than 2.0/8) in lock-up condition, the engine speed should not change abruptly. If there is a big jump in engine speed, there is no lock-up.

CONSULT-II REFERENCE VALUE IN DATA MONITOR MODE

NHAT0058S01

Remarks: Specification data are reference values.

Monitor item	Condition	Specification
Torque converter clutch solenoid valve duty	Lock-up OFF ↓ Lock-up ON	Approximately 4% ↓ Approximately 94%

TCM TERMINALS AND REFERENCE VALUE

NHAT0058S02

Remarks: Specification data are reference values.

Terminal No.	Wire color	Item	Condition		Judgement standard (Approx.)
3	G/B	Torque converter clutch solenoid valve		When A/T performs lock-up.	8 - 15V
				When A/T does not perform lock-up.	0V

On Board Diagnosis Logic

NHAT0225

Diagnostic trouble code TCC SOLENOID/CIRC with CONSULT-II or P0740 without CONSULT-II is detected when TCM detects an improper voltage drop when it tries to operate the solenoid valve.

Possible Cause

NHAT0226

Check the following items.

- Torque converter clutch solenoid valve
- Harness or connectors
  (The solenoid circuit is open or shorted.)

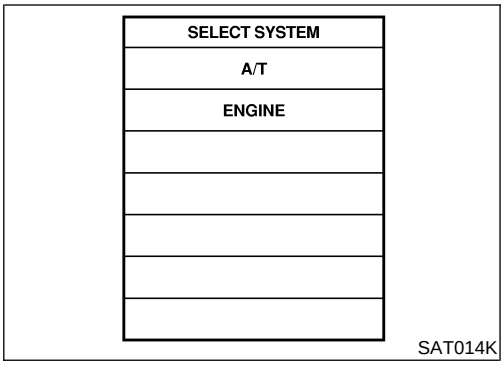

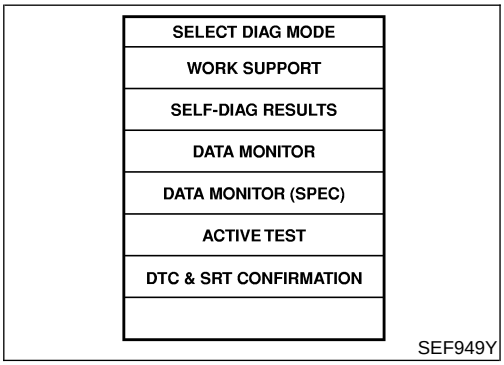

Diagnostic Trouble Code (DTC) Confirmation Procedure

NHAT0227

NOTE:

If “DTC Confirmation Procedure” has been previously conducted, always turn ignition switch OFF and wait at least 10 seconds before conducting the next test.

After the repair, perform the following procedure to confirm the malfunction is eliminated.

WITH CONSULT-II

NHAT0227S01

1) Turn ignition switch ON. (Do not start engine.)
2) Select “DATA MONITOR” mode for “ENGINE” with CONSULT-II and wait at least 1 second.
3) Start engine and maintain the following conditions for at least 5 consecutive seconds.
   VHCL SPEED SE: 80 km/h (50 MPH) or more
   THROTTLE POSI: 0.5/8 - 1.0/8
   Selector lever: D position (O/D ON)
   Driving location: Driving the vehicle uphill (increased engine load) will help maintain the driving conditions required for this test.

WITH GST

NHAT0227S02

Follow the procedure “With CONSULT-II”.

Wiring Diagram — AT — TCV

NHAT0059

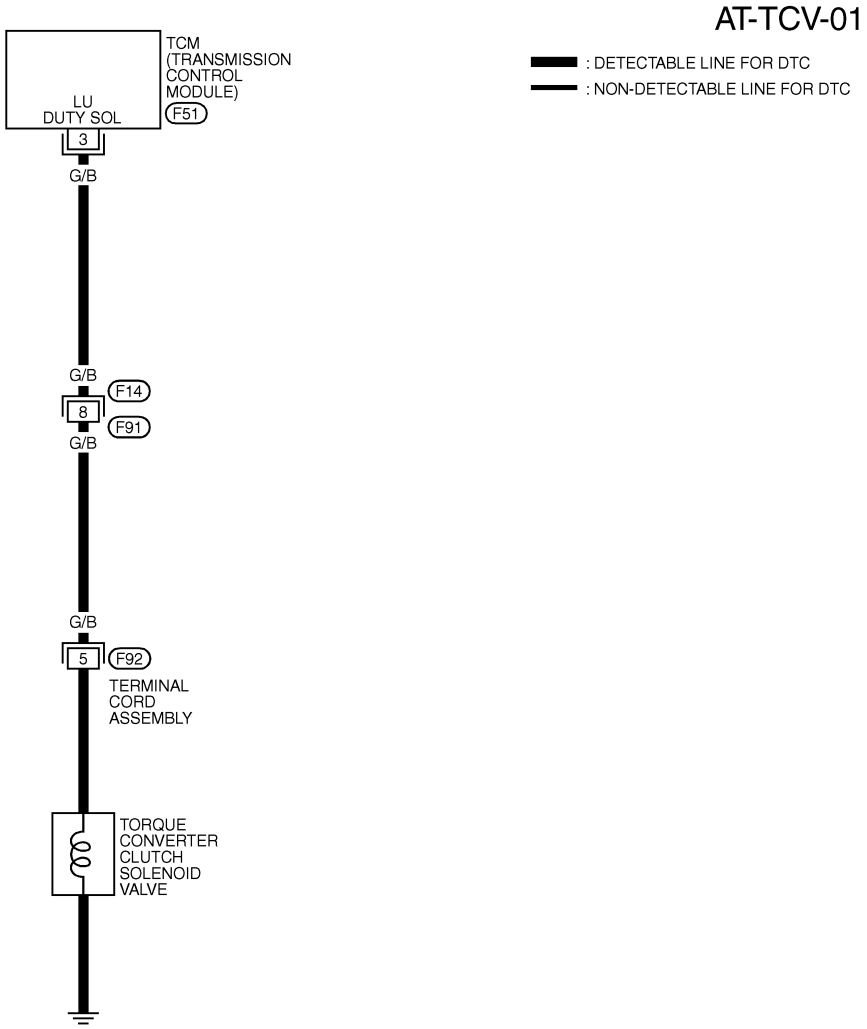

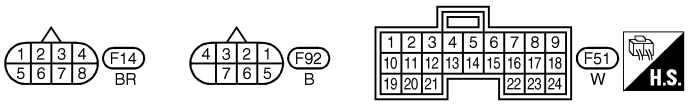

MAT480B

Diagnostic Procedure

NHAT0060

1	CHECK SOLENOID VALVE RESISTANCE

1. Turn ignition switch to OFF position.
2. Disconnect terminal cord assembly connector in engine compartment.
3. Check resistance between terminal 5 (G/B) and ground.

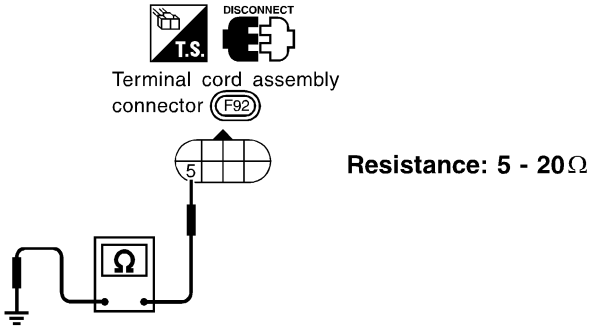

Resistance: 5 - 20Ω

SAT627JE

OK or NG

OK	▶	GO TO 3.
NG	▶	GO TO 2.

2	CHECK SOLENOID VALVE OPERATION

1. Remove oil pan. Refer to AT-282.
2. Check the following items:
- Torque converter clutch solenoid valve

i. Check solenoid valve by listening for its operating sound while applying battery voltage to the terminal and ground.

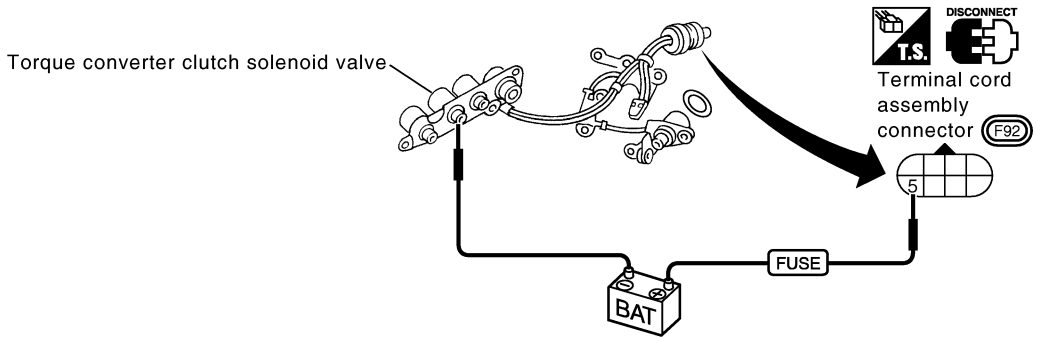

SAT828K

- Harness of terminal cord assembly for short or open

OK or NG

OK	▶	GO TO 3.
NG	▶	Repair or replace damaged parts.

3	CHECK POWER SOURCE CIRCUIT

1. Turn ignition switch to OFF position.
2. Disconnect TCM harness connector.
3. Check continuity between terminal cord assembly connector terminal 5 (G/B) and TCM harness connector F51 terminal 3 (G/B). Refer to wiring diagram — AT — TCV.
   Continuity should exist.
   If OK, check harness for short to ground and short to power.
4. Reinstall any part removed.

OK or NG

OK	▶	GO TO 4.
NG	▶	Repair open circuit or short to ground or short to power in harness or connectors.

4	CHECK DTC	
Perform Diagnostic Trouble Code (DTC) confirmation procedure, AT-158.		
OK or NG		
OK	▶	**INSPECTION END**
NG	▶	GO TO 5.

5	CHECK TCM INSPECTION	
1. Perform TCM input/output signal inspection. 2. If NG, recheck TCM pin terminals for damage or loose connection with harness connector.		
OK or NG		
OK	▶	**INSPECTION END**
NG	▶	Repair or replace damaged parts.

Description

NHAT0061

- This is an OBD-II self-diagnostic item and not available in TCM self-diagnosis.
- This malfunction will not be detected while the A/T CHECK indicator lamp is indicating another self-diagnosis malfunction.
- This malfunction is detected when the A/T does not shift into fourth gear position or the torque converter clutch does not lock up as instructed by the TCM. This is not caused by electrical malfunction (circuits open or shorted) but by mechanical malfunction such as control valve sticking, improper solenoid valve operation, malfunctioning oil pump or torque converter clutch, etc.

CONSULT-II REFERENCE VALUE IN DATA MONITOR MODE

NHAT0061S01

Remarks: Specification data are reference values.

Monitor item	Condition	Specification
Torque converter clutch solenoid valve duty	Lock-up OFF ↓ Lock-up ON	Approximately 4% ↓ Approximately 94%

TCM TERMINALS AND REFERENCE VALUE

NHAT0061S02

Remarks: Specification data are reference values.

Terminal No.	Wire color	Item	Condition		Judgement standard (Approx.)
1	G/R	Line pressure solenoid valve		When releasing accelerator pedal after warming up engine.	1.5 - 3.0V
				When depressing accelerator pedal fully after warming up engine.	0V
2	W/B	Line pressure solenoid valve (with dropping resistor)		When releasing accelerator pedal after warming up engine.	4 - 14V
				When depressing accelerator pedal fully after warming up engine.	0V
3	G/B	Torque converter clutch solenoid valve		When A/T performs lock-up.	8 - 15V
				When A/T does not perform lock-up.	0V

On Board Diagnosis Logic

NHAT0228

This diagnosis monitors actual gear position by checking the torque converter slip ratio calculated by TCM as follows:
Torque converter slip ratio = A x C/B
A: Output shaft revolution signal from revolution sensor
B: Engine speed signal from ECM
C: Gear ratio determined as gear position which TCM supposes
If the actual gear position is much lower than the position (4th) supposed by TCM, the slip ratio will be much less than normal. In case the ratio does not reach the specified value, TCM judges this diagnosis malfunction.

This malfunction will be caused when shift solenoid valve B is stuck closed.
Gear positions supposed by TCM are as follows.
In case of gear position with no malfunctions: 1, 2, 3 and 4 positions
In case of gear position with shift solenoid valve B stuck closed: 1, 2, 2 and 1* positions to each gear position above
*: P0744 is detected.
Diagnostic trouble code A/T TCC S/V FNCTN with CONSULT-II or P0744 without CONSULT-II is detected when A/T cannot perform lock-up even if electrical circuit is good.

Possible Cause

NHAT0229

Check the following items.

- Line pressure solenoid valve
- Torque converter clutch solenoid valve
- Each clutch
- Hydraulic control circuit

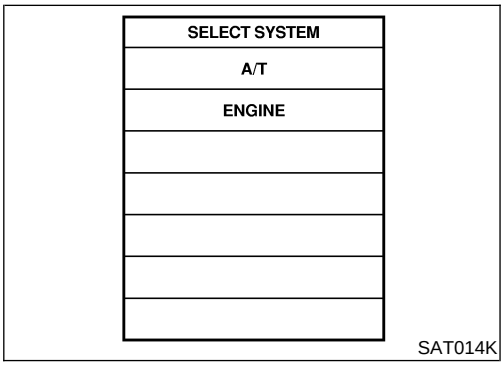

SAT014K

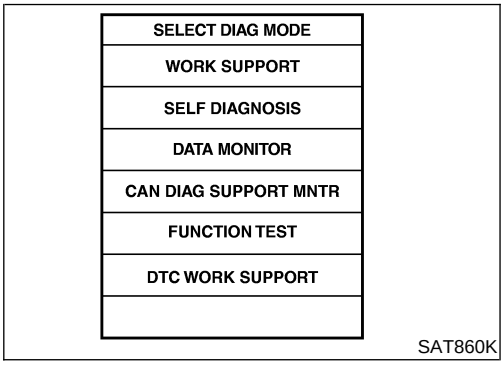

SAT860K

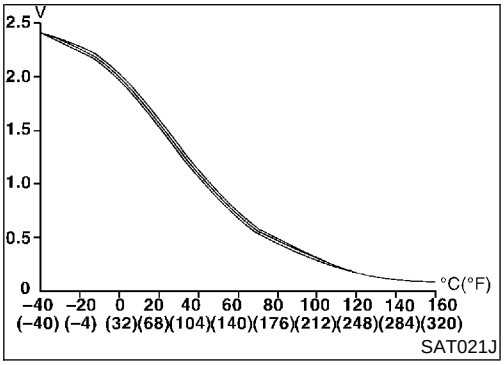

SAT021J

Diagnostic Trouble Code (DTC) Confirmation Procedure

NHAT0230

CAUTION:
Always drive vehicle at a safe speed.

NOTE:
If "DTC Confirmation Procedure" has been previously conducted, always turn ignition switch OFF and wait at least 10 seconds before conducting the next test.

After the repair, perform the following procedure to confirm the malfunction is eliminated.

WITH CONSULT-II

NHAT0230S01

1) Start engine and select "DATA MONITOR" mode for "A/T" with CONSULT-II.
2) Make sure that output voltage of A/T fluid temperature sensor is within the range below.
   FLUID TEMP SEN: 0.4 - 1.5V
   If out of range, drive vehicle to decrease voltage (warm up the fluid) or stop engine to increase voltage (cool down the fluid).
3) Select "TCC S/V FNCTN P0744" of "DTC WORK SUPPORT" mode for "A/T" with CONSULT-II and touch "START".
4) Accelerate vehicle to more than 80 km/h (50 MPH) and maintain the following condition continuously until "TESTING" has turned to "COMPLETE". (It will take approximately 30 seconds after "TESTING" shows.)
   THROTTLE POSI: 1.0/8 - 2.0/8 (at all times during step 4)
   Selector lever: D position
   TCC S/V DUTY: More than 94%
   VHCL/S SE·A/T: Constant speed of more than 80 km/h (50 MPH)

- **Check that "GEAR" shows "4".**
- **For shift schedule, refer to SDS, AT-381.**
- **If "TESTING" does not appear on CONSULT-II for a long time, select "SELF-DIAG RESULTS". In case a 1st trip DTC**

other than P0744 is shown, refer to applicable "TROUBLE DIAGNOSIS FOR DTC".

5) Make sure that "OK" is displayed. (If "NG" is displayed, refer to "DIAGNOSTIC PROCEDURE".)
   Refer to AT-166, "DIAGNOSTIC PROCEDURE".
   Refer to AT-381, "Shift Schedule".

WITH GST

NHAT0230S02

Follow the procedure "With CONSULT-II".

Wiring Diagram — AT — TCCSIG

=NHAT0062

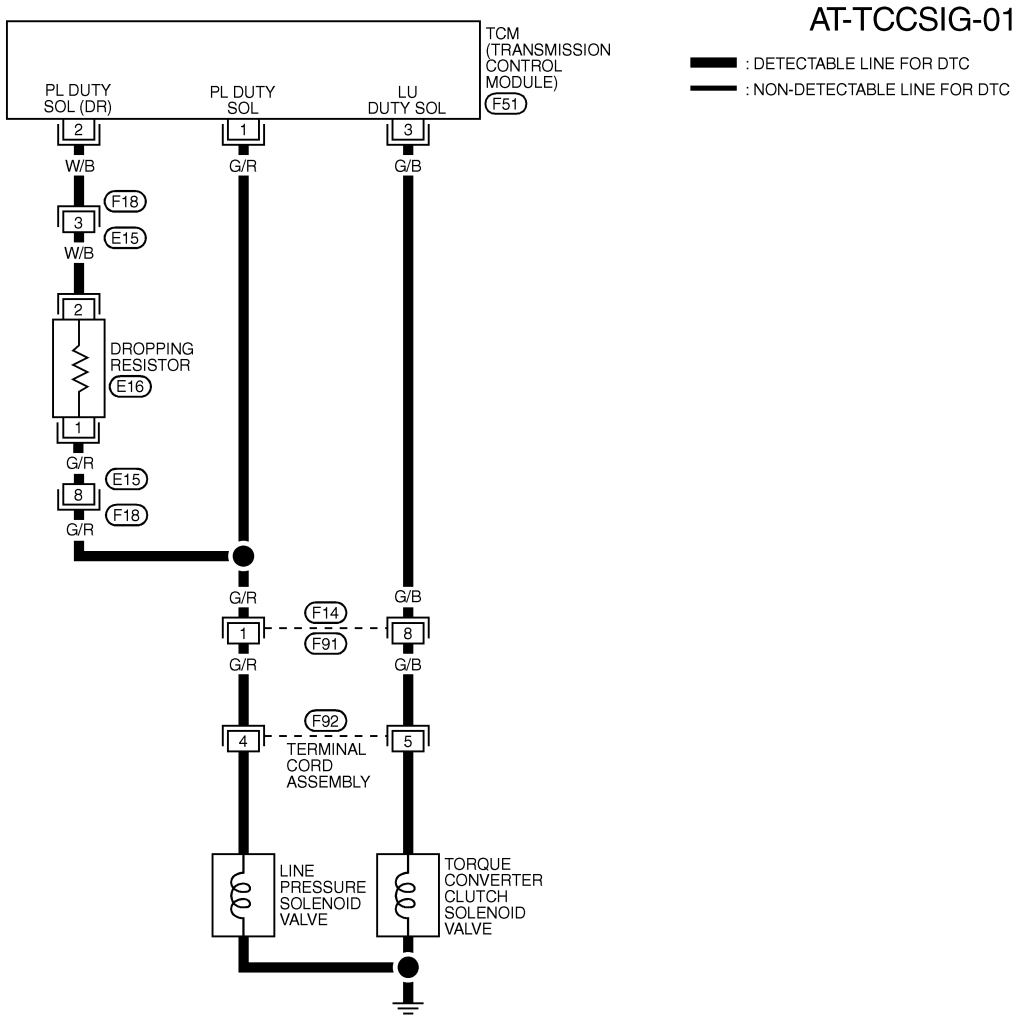

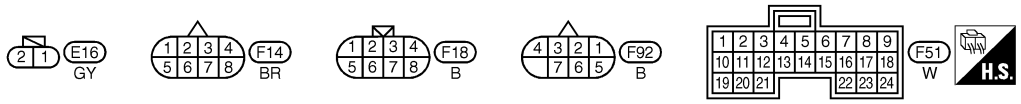

MAT481B

Diagnostic Procedure

NHAT0063

1	CHECK SHIFT UP (D_3 TO D_4)

During “Cruise test — Part 1” (AT-77), does A/T shift from D_3 to D_4 at the specified speed?

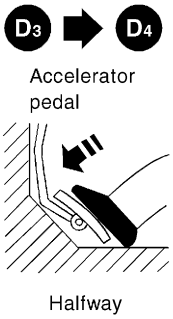

SAT988H

Yes or No

Yes	▶	GO TO 11.
No	▶	GO TO 2.

2	CHECK LINE PRESSURE

Perform line pressure test.
Refer to AT-68.

Engine speed rpm	Line pressure kPa (kg/cm², psi)	
	D, 2 and 1 positions	R position
Idle	500 (5.1, 73)	778 (7.9, 113)
Stall	1,233 (12.6, 179)	1,918 (19.6, 278)

MTBL1183

OK or NG

OK	▶	GO TO 3.
NG	▶	GO TO 6.

3	CHECK CONTROL VALVE

1. Disassemble control valve assembly. Refer to AT-314.
2. Check to ensure that:
- Valve, sleeve and plug slide along valve bore under their own weight.
- Valve, sleeve and plug are free from burrs, dents and scratches.
- Control valve springs are free from damage, deformation and fatigue.
- Hydraulic line is free from obstacles.

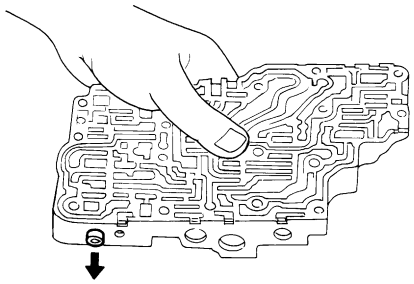

SAT367H

OK or NG

OK	▶	GO TO 4.
NG	▶	Repair control valve.

4	CHECK SHIFT UP (D_3 TO D_4)

Does A/T shift from D_3 to D_4 at the specified speed?

OK or NG

OK	▶	GO TO 5.
NG	▶	Check control valve again. Repair or replace control valve assembly.

5	CHECK DTC

Perform Diagnostic Trouble Code (DTC) confirmation procedure, AT-163.

OK or NG

OK	▶	**INSPECTION END**
NG	▶	GO TO 11. Check for proper lock-up.

6	CHECK SOLENOID VALVE RESISTANCE

1. Remove control valve assembly. Refer to AT-282.
- Line pressure solenoid valve
2. Check resistance to the terminal and ground.

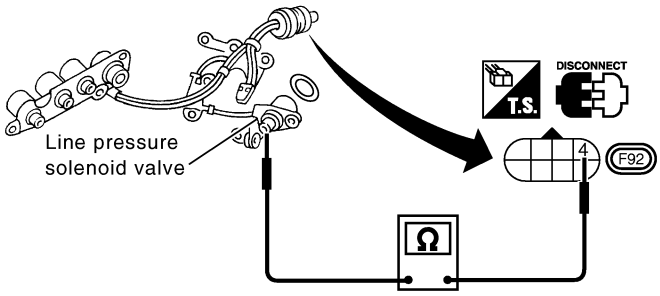

Solenoid valve	Terminal No. (Wire color)		Resistance (Approx.)
Line pressure solenoid valve	4(G/R)	Ground	2.5 - 5 Ω

SAT829K

OK or NG

OK	▶	GO TO 7.
NG	▶	Replace solenoid valve assembly.

7	CHECK SOLENOID VALVE OPERATION

1. Remove control valve assembly. Refer to AT-314.
- Line pressure solenoid valve
2. Check solenoid valve by listening for its operating sound while applying battery voltage to the terminal and ground.

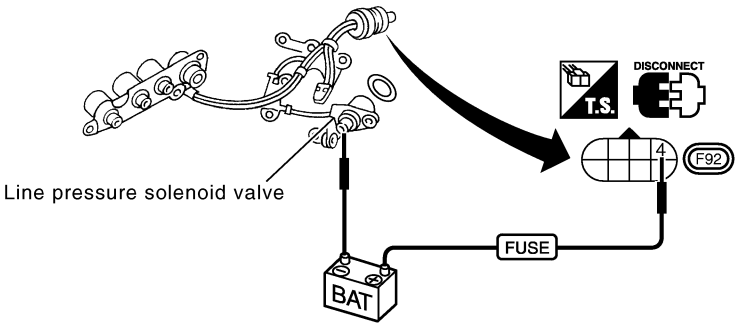

SAT830K

OK or NG

OK	▶	GO TO 8.
NG	▶	Replace solenoid valve assembly.

8	CHECK CONTROL VALVE

1. Disassemble control valve assembly. Refer to AT-314.
2. Check line pressure circuit valves for sticking.
- Pressure regulator valve
- Pilot valve
- Pressure modifier valve

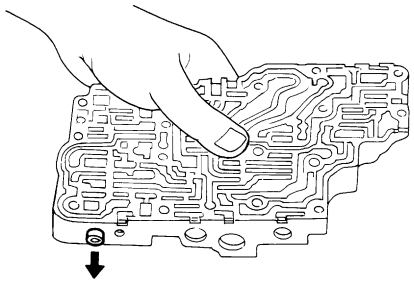

SAT367H

OK or NG

OK	▶	GO TO 9.
NG	▶	Repair control valve.

9	CHECK SHIFT UP (D_3 TO D_4)

Does A/T shift from D_3 to D_4 at the specified speed?

OK or NG

OK	▶	GO TO 10.
NG	▶	Check control valve again. Repair or replace control valve assembly.

10	CHECK DTC

Perform Diagnostic Trouble Code (DTC) confirmation procedure, AT-163.

OK or NG

OK	▶	**INSPECTION END**
NG	▶	GO TO 11.Check for proper lock-up.

11	CHECK LOCK-UP

During "Cruise test — Part 1" (AT-77), does A/T perform lock-up at the specified speed?

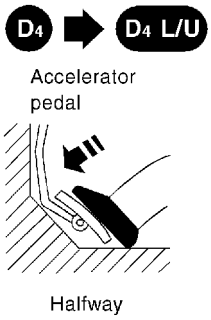

SAT989H

Yes or No

Yes	▶	Perform "Cruise test — Part 1" again and return to the start point of this test group.
No	▶	GO TO 12.

12	CHECK SOLENOID VALVE RESISTANCE

1. Remove control valve assembly. Refer to AT-282.
- Torque converter clutch solenoid valve
2. Check resistance to the terminal and ground.

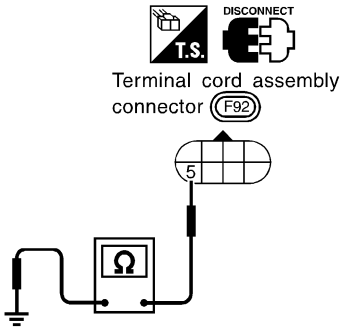

Resistance: 5 - 20Ω (Approx.)

SAT627JC

OK or NG

OK	▶	GO TO 14.
NG	▶	Replace solenoid valve assembly.

13	CHECK SOLENOID VALVE OPERATION

1. Remove control valve assembly. Refer to AT-282.
- Torque converter clutch solenoid valve
2. Check solenoid valve by listening for its operating sound while applying battery voltage to the terminal and ground.

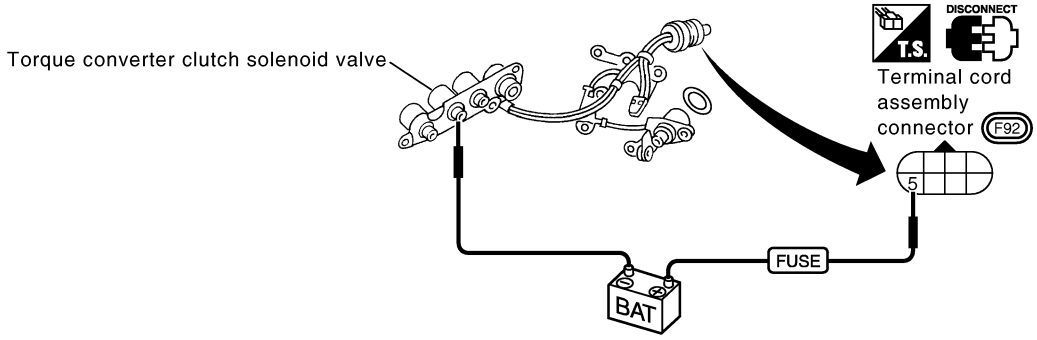

SAT828K

OK or NG

OK	▶	GO TO 14.
NG	▶	Replace solenoid valve assembly.

14	CHECK CONTROL VALVE

1. Disassemble control valve assembly. Refer to AT-314.
2. Check control valves for sticking.
- Torque converter clutch control valve
- Torque converter clutch relief valve

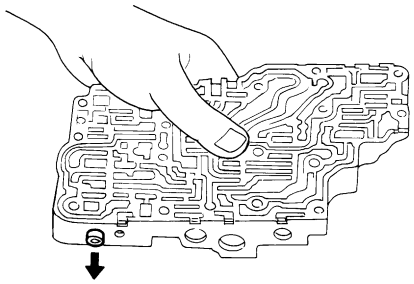

SAT367H

OK or NG

OK	▶	GO TO 15.
NG	▶	Repair control valve.

15	CHECK LOCK-UP

Does A/T perform lock-up at the specified speed?

Yes or No

Yes	▶	GO TO 16.
No	▶	Check control valve again. Repair or replace control valve assembly.

16	CHECK DTC

Perform Diagnostic Trouble Code (DTC) confirmation procedure, AT-163.

OK or NG

OK	▶	**INSPECTION END**
NG	▶	Perform "Cruise test — Part 1" again and return to the start point of this test group.

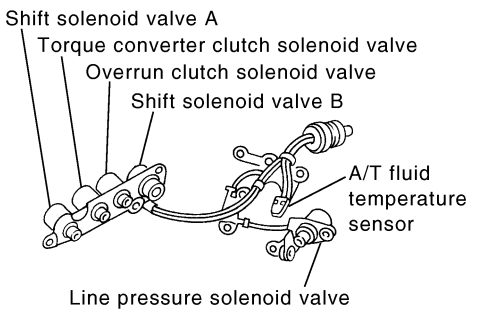

Description

NHAT0064

The line pressure solenoid valve regulates the oil pump discharge pressure to suit the driving condition in response to a signal sent from the TCM.

The line pressure duty cycle value is not consistent when the closed throttle position switch is ON. To confirm the line pressure duty cycle at low pressure, the accelerator (throttle) should be open until the closed throttle position switch is OFF.

CONSULT-II REFERENCE VALUE IN DATA MONITOR MODE

NHAT0064S01

Remarks: Specification data are reference values.

Monitor item	Condition	Specification
Line pressure solenoid valve duty	Small throttle opening (Low line pressure) ↓ Large throttle opening (High line pressure)	Approximately 24% ↓ Approximately 95%

NOTE:

The line pressure duty cycle value is not consistent when the closed throttle position switch is ON. To confirm the line pressure duty cycle at low pressure, the accelerator (throttle) should be open until the closed throttle position switch is OFF.

TCM TERMINALS AND REFERENCE VALUE

NHAT0064S02

Remarks: Specification data are reference values.

Terminal No.	Wire color	Item	Condition		Judgement standard (Approx.)
1	G/R	Line pressure solenoid valve	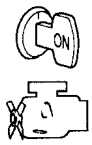	When releasing accelerator pedal after warming up engine.	1.5 - 3.0V
				When depressing accelerator pedal fully after warming up engine.	0V
2	W/B	Line pressure solenoid valve (with dropping resistor)		When releasing accelerator pedal after warming up engine.	4 - 14V
				When depressing accelerator pedal fully after warming up engine.	0V

On Board Diagnosis Logic

NHAT0231

Diagnostic trouble code L/PRESS SOL/CIRC with CONSULT-II or P0745 without CONSULT-II is detected when TCM detects an improper voltage drop when it tries to operate the solenoid valve.

Possible Cause

NHAT0232

Check the following items.

- Harness or connectors
  (The solenoid circuit is open or shorted.)
- Line pressure solenoid valve

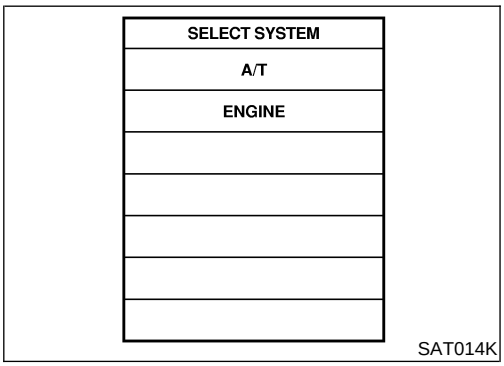

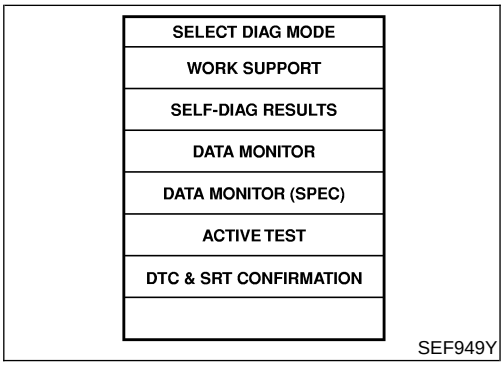

Diagnostic Trouble Code (DTC) Confirmation Procedure

NHAT0233

NOTE:

If "DTC Confirmation Procedure" has been previously conducted, always turn ignition switch OFF and wait at least 10 seconds before conducting the next test.

After the repair, perform the following procedure to confirm the malfunction is eliminated.

WITH CONSULT-II

NHAT0233S01

1) Turn ignition switch ON and select "DATA MONITOR" mode for "ENGINE" with CONSULT-II.
2) Depress accelerator pedal completely and wait at least 5 seconds.

WITH GST

NHAT0233S02

Follow the procedure "With CONSULT-II".

Wiring Diagram — AT — LPSV

NHAT0065

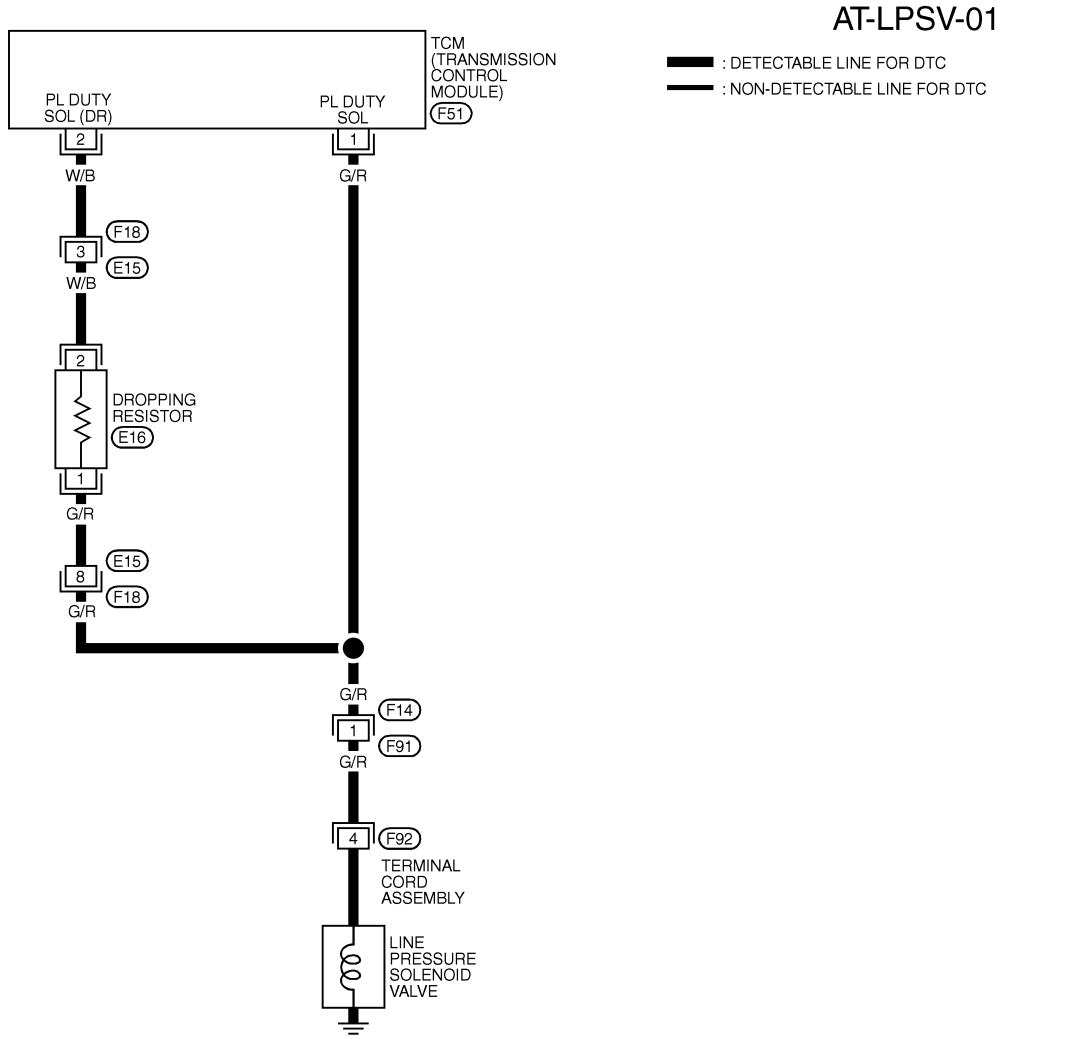

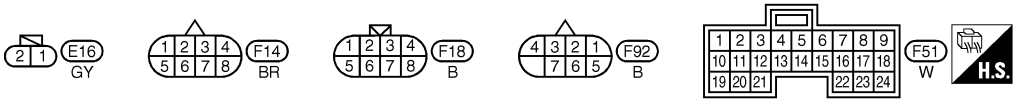

MAT482B

Diagnostic Procedure

NHAT0066

1	CHECK SOLENOID VALVE RESISTANCE

1. Turn ignition switch to OFF position.
2. Disconnect terminal cord assembly connector in engine compartment.
3. Check resistance between terminal 4 (G/R) and ground.

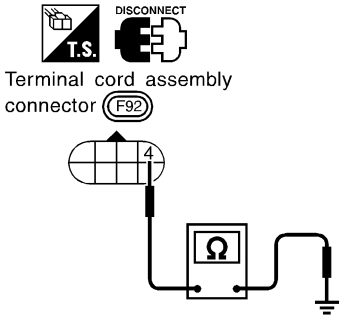

Resistance: 2.5 - 5 Ω

SAT630JB

OK or NG

OK	▶	GO TO 3.
NG	▶	GO TO 2.

2	CHECK SOLENOID VALVE OPERATION

1. Remove control valve assembly. Refer to AT-282.
2. Check the following items:
- Line pressure solenoid valve

i. Check solenoid valve by listening for its operating sound while applying battery voltage to the terminal and ground.

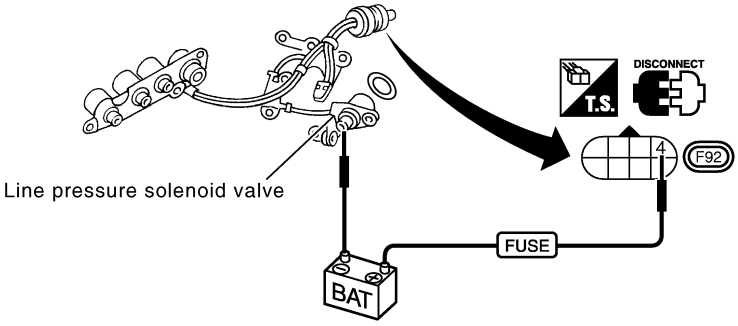

SAT830K

- Harness of terminal cord assembly for short or open

OK or NG

OK	▶	GO TO 3.
NG	▶	Repair or replace damaged parts.

3	CHECK POWER SOURCE AND DROPPING RESISTOR CIRCUIT

1. Turn ignition switch to OFF position.
2. Disconnect TCM harness connector.
3. Check resistance between terminal 4 (G/R) and TCM harness connector F51 terminal 2 (W/B).

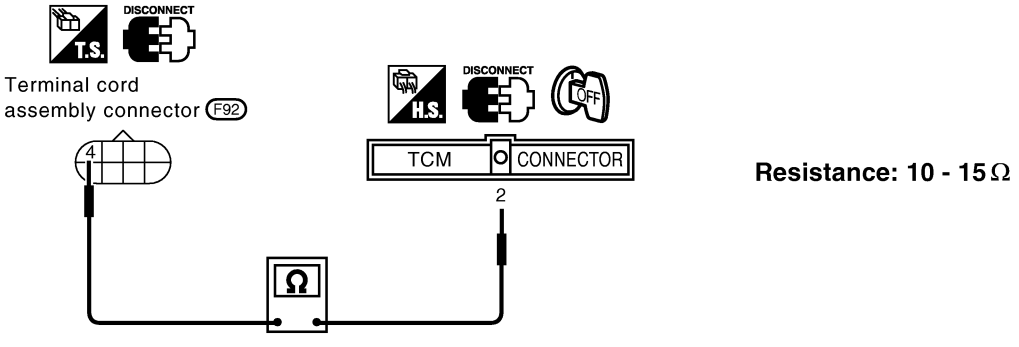

OK or NG

OK	▶	GO TO 5.
NG	▶	GO TO 4.

4	DETECT MALFUNCTIONING ITEM

Check the following items:
- Dropping resistor
- Check resistance between two terminals.

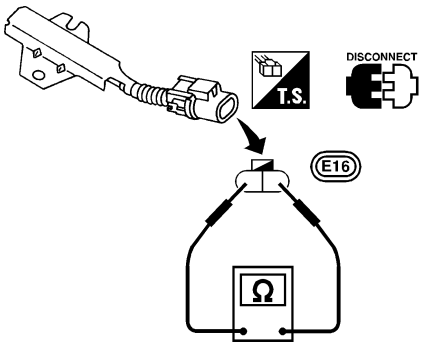

Resistance:
12Ω (Approx.)

- Harness for short or open between TCM harness connector F50 terminal 2 (W/B) and terminal cord assembly

OK or NG

OK	▶	GO TO 5.
NG	▶	Repair or replace damaged parts.

5	CHECK POWER SOURCE CIRCUIT

1. Turn ignition switch to OFF position.
2. Check continuity between terminal cord assembly connector terminal 4 (G/R) and TCM harness connector F50 terminal 1 (G/R). Refer to wiring diagram — AT — LPSV.
   Continuity should exist.
   If OK, check harness for short to ground and short to power.
3. Reinstall any part removed.

OK or NG

OK	▶	GO TO 6.
NG	▶	Repair open circuit or short to ground or short to power in harness or connectors.

6	CHECK DTC	
Perform Diagnostic Trouble Code (DTC) confirmation procedure, AT-173.		
OK or NG		
OK	▶	**INSPECTION END**
NG	▶	GO TO 7.

7	CHECK TCM INSPECTION	
1. Perform TCM input/output signal inspection. 2. If NG, recheck TCM pin terminals for damage or loose connection with harness connector.		
OK or NG		
OK	▶	**INSPECTION END**
NG	▶	Repair or replace damaged parts.

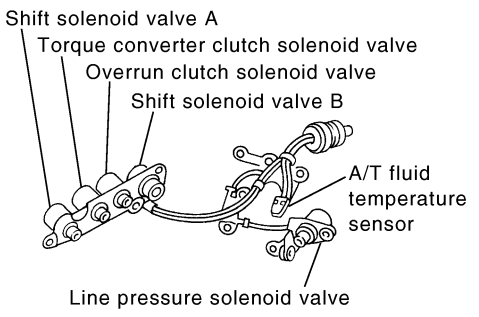

Description

NHAT0067

Shift solenoid valves A and B are turned ON or OFF by the TCM in response to signals sent from the park/neutral position (PNP) switch, vehicle speed and electric throttle control actuator (throttle position sensors). Gears will then be shifted to the optimum position.

Gear position	1	2	3	4
Shift solenoid valve A	ON (Closed)	OFF (Open)	OFF (Open)	ON (Closed)
Shift solenoid valve B	ON (Closed)	ON (Closed)	OFF (Open)	OFF (Open)

TCM TERMINALS AND REFERENCE VALUE

NHAT0067S01

Remarks: Specification data are reference values.

Terminal No.	Wire color	Item	Condition		Judgement standard (Approx.)
11	R/Y	Shift solenoid valve A		When shift solenoid valve A operates. (When driving in D_1 or D_4.)	Battery voltage
				When shift solenoid valve A does not operate. (When driving in D_2 or D_3.)	0V

On Board Diagnosis Logic

NHAT0234

Diagnostic trouble code SFT SOL A/CIRC with CONSULT-II or P0750 without CONSULT-II is detected when TCM detects an improper voltage drop when it tries to operate the solenoid valve.

Possible Cause

NHAT0235

Check the following items.

- Harness or connectors
  (The solenoid circuit is open or shorted.)
- Shift solenoid valve A

SELECT SYSTEM
A/T
ENGINE

SAT014K

SELECT DIAG MODE
WORK SUPPORT
SELF-DIAG RESULTS
DATA MONITOR
DATA MONITOR (SPEC)
ACTIVE TEST
DTC & SRT CONFIRMATION

SEF949Y

Diagnostic Trouble Code (DTC) Confirmation Procedure

NHAT0236

CAUTION:

Always drive vehicle at a safe speed.

NOTE:

If "DTC Confirmation Procedure" has been previously conducted, always turn ignition switch OFF and wait at least 10 seconds before conducting the next test.

After the repair, perform the following procedure to confirm the malfunction is eliminated.

WITH CONSULT-II

NHAT0236S01

1) Turn ignition switch ON and select "DATA MONITOR" mode for "ENGINE" with CONSULT-II.
2) Start engine.
3) Drive vehicle in D position and allow the transmission to shift 1 → 2 ("GEAR").

WITH GST

NHAT0236S02

Follow the procedure "With CONSULT-II".

Wiring Diagram — AT — SSV/A

NHAT0068

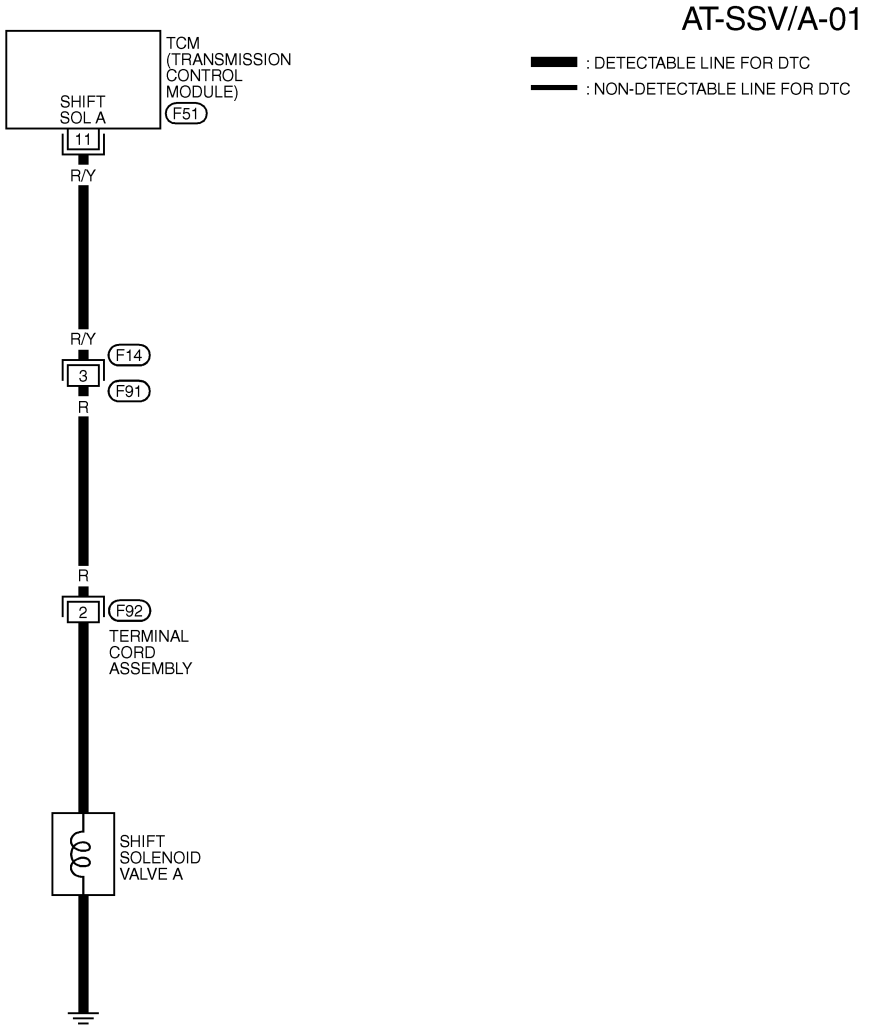

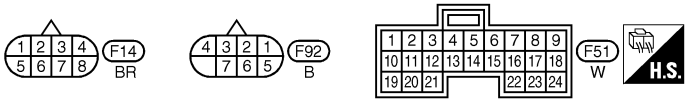

MAT483B

Diagnostic Procedure

NHAT0069

1	CHECK SHIFT SOLENOID VALVE RESISTANCE

1. Turn ignition switch to OFF position.
2. Disconnect terminal cord assembly connector in engine compartment.
3. Check resistance between terminal 2 (R) and ground.

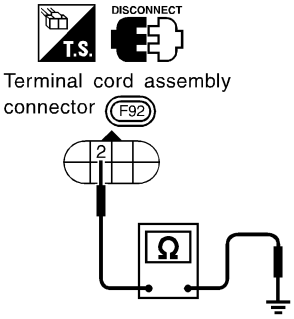

Resistance: 20 - 30 Ω

SAT632JD

OK or NG

OK	▶	GO TO 3.
NG	▶	GO TO 2.

2	CHECK SHIFT SOLENOID VALVE OPERATION

1. Remove control valve assembly. Refer to AT-282.
2. Check the following items:
- Shift solenoid valve A
- Operation check

i. Check solenoid valve by listening for its operating sound while applying battery voltage to the terminal and ground.

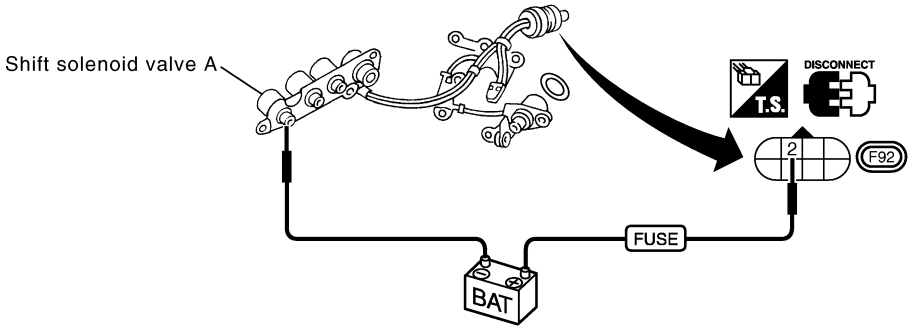

SAT827K

- Harness of terminal cord assembly for short or open

OK or NG

OK	▶	GO TO 3.
NG	▶	Repair or replace damaged parts.

3	CHECK POWER SOURCE CIRCUIT
1. Turn ignition switch to OFF position. 2. Disconnect TCM harness connector. 3. Check continuity between terminal cord assembly connector terminal 2 (R) and TCM harness connector F51 terminal 11 (R/Y). Refer to wiring diagram — AT — SSV/A. **Continuity should exist.** If OK, check harness for short to ground and short to power. 4. Reinstall any part removed.	
OK or NG	
OK ▶	GO TO 4.
NG ▶	Repair open circuit or short to ground or short to power in harness or connectors.

4	CHECK DTC
Perform Diagnostic Trouble Code (DTC) confirmation procedure, AT-179.	
OK or NG	
OK ▶	**INSPECTION END**
NG ▶	GO TO 5.

5	CHECK TCM INSPECTION
1. Perform TCM input/output signal inspection. 2. If NG, recheck TCM pin terminals for damage or loose connection with harness connector.	
OK or NG	
OK ▶	**INSPECTION END**
NG ▶	Repair or replace damaged parts.

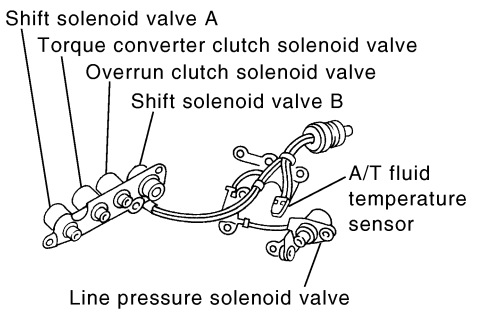

SAT820K

Description

NHAT0070

Shift solenoid valves A and B are turned ON or OFF" by the TCM in response to signals sent from the park/neutral position (PNP) switch, vehicle speed and electric throttle control actuator (throttle position sensors). Gears will then be shifted to the optimum position.

Gear position	1	2	3	4
Shift solenoid valve A	ON (Closed)	OFF (Open)	OFF (Open)	ON (Closed)
Shift solenoid valve B	ON (Closed)	ON (Closed)	OFF (Open)	OFF (Open)

TCM TERMINALS AND REFERENCE VALUE

NHAT0070S01

Remarks: Specification data are reference values.

Terminal No.	Wire color	Item	Condition		Judgement standard (Approx.)
12	LG/B	Shift solenoid valve B		When shift solenoid valve B operates. (When driving in D_1 or D_2.)	Battery voltage
				When shift solenoid valve B does not operate. (When driving in D_3 or D_4.)	0V

On Board Diagnosis Logic

NHAT0237

Diagnostic trouble code SFT SOL B/CIRC with CONSULT-II or P0755 without CONSULT-II is detected when TCM detects an improper voltage drop when it tries to operate the solenoid valve.

Possible Cause

NHAT0239

Check the following items.

- Harness or connectors
  (The solenoid circuit is open or shorted.)
- Shift solenoid valve B

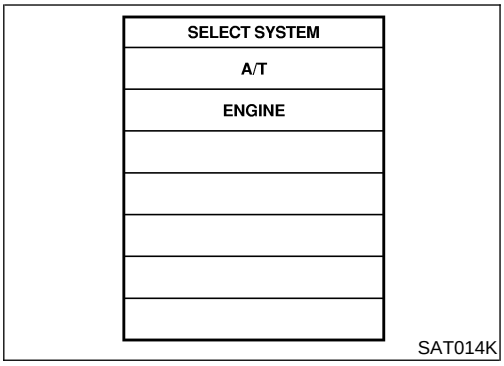

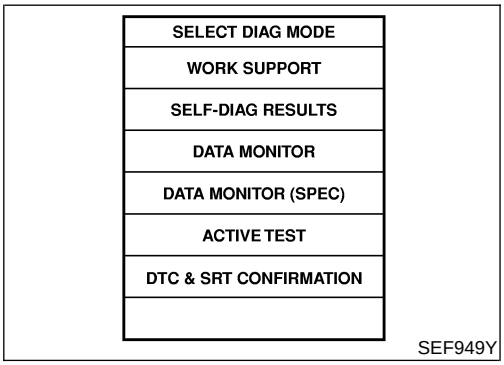

Diagnostic Trouble Code (DTC) Confirmation Procedure

NHAT0238

CAUTION:

Always drive vehicle at a safe speed.

NOTE:

If “DTC Confirmation Procedure” has been previously conducted, always turn ignition switch OFF and wait at least 10 seconds before conducting the next test.

After the repair, perform the following procedure to confirm the malfunction is eliminated.

WITH CONSULT-II

NHAT0238S01

1) Turn ignition switch ON and select “DATA MONITOR” mode for “ENGINE” with CONSULT-II.
2) Start engine.
3) Drive vehicle in D position and allow the transmission to shift 1 → 2 → 3 (“GEAR”).

WITH GST

NHAT0238S02

Follow the procedure “With CONSULT-II”.

Wiring Diagram — AT — SSV/B

NHAT0071

AT-SSV/B-01

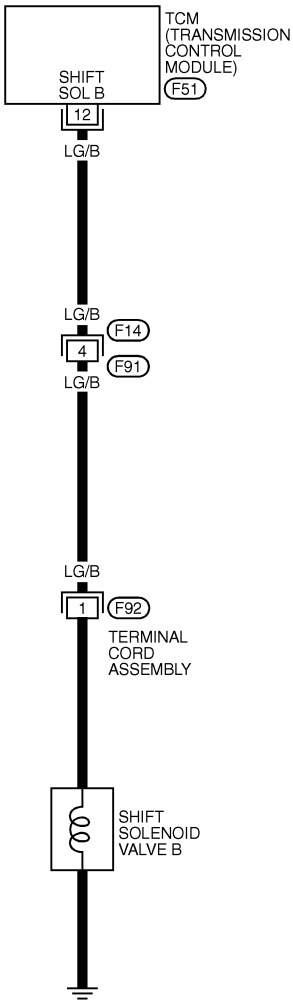

: DETECTABLE LINE FOR DTC
: NON-DETECTABLE LINE FOR DTC

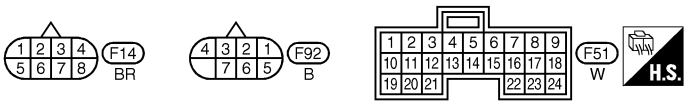

MAT484B

Diagnostic Procedure

NHAT0072

1	CHECK SHIFT SOLENOID VALVE RESISTANCE

1. Turn ignition switch to OFF position.
2. Disconnect terminal cord assembly connector in engine compartment.
3. Check resistance between terminal 1 (LG/B) and ground.

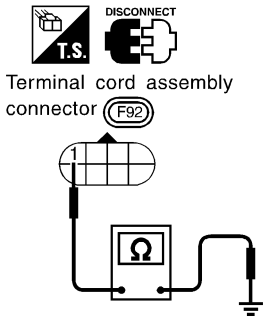

Resistance: 5 - 20 Ω

SAT633JD

OK or NG

OK	▶	GO TO 3.
NG	▶	GO TO 2.

2	CHECK SHIFT SOLENOID VALVE OPERATION

1. Remove control valve assembly. Refer to AT-282.
2. Check the following items:
- Shift solenoid valve B
- Operation check

i. Check solenoid valve by listening for its operating sound while applying battery voltage to the terminal and ground.

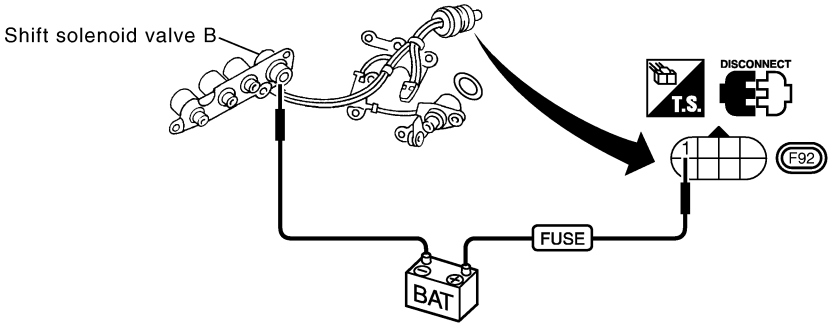

SAT825K

- Harness of terminal cord assembly for short or open

OK or NG

OK	▶	GO TO 3.
NG	▶	Repair or replace damaged parts.

3	CHECK POWER SOURCE CIRCUIT	
1. Turn ignition switch to OFF position. 2. Disconnect TCM harness connector. 3. Check continuity between terminal cord assembly connector terminal 1 (LG/B) and TCM harness connector F51 terminal 12 (LG/B). Refer to wiring diagram — AT — SSV/B. **Continuity should exist.** If OK, check harness for short to ground and short to power. 4. Reinstall any part removed.		
OK or NG		
OK	▶	GO TO 4.
NG	▶	Repair open circuit or short to ground or short to power in harness or connectors.

4	CHECK DTC	
Perform Diagnostic Trouble Code (DTC) confirmation procedure, AT-184.		
OK or NG		
OK	▶	**INSPECTION END**
NG	▶	GO TO 5.

5	CHECK TCM INSPECTION	
1. Perform TCM input/output signal inspection. 2. If NG, recheck TCM pin terminals for damage or loose connection with harness connector.		
OK or NG		
OK	▶	**INSPECTION END**
NG	▶	Repair or replace damaged parts.

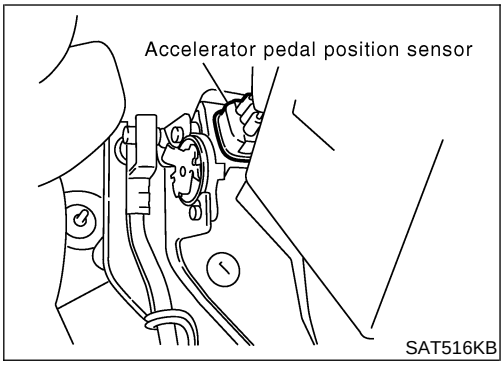

Description

NHAT0073

The accelerator pedal position sensor is part of the system that controls throttle position. Accelerator pedal position signal is sent to the ECM. And the signal is also sent to TCM as throttle valve position signal.

CONSULT-II REFERENCE VALUE IN DATA MONITOR MODE

NHAT0073S01

Remarks: Specification data are reference values.

Monitor item	Condition	Specification
Accelerator pedal position sensor	Fully-closed throttle	Approximately 0.5V
	Fully-open throttle	Approximately 4V

TCM TERMINALS AND REFERENCE VALUE

NHAT0073S02

Remarks: Specification data are reference values.

Terminal No.	Wire color	Item	Condition		Judgement standard (Approx.)
32	R	Sensor power	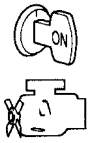	Ignition switch ON.	4.5 - 5.5V
				Ignition switch OFF.	0V
41	W	Accelerator pedal position sensor		When depressing accelerator pedal slowly after warming up engine. (Voltage rises gradually in response to throttle position.)	Fully-closed throttle: 0.5V Fully-open throttle: 4V
42	B	Sensor ground	—		0V

On Board Diagnosis Logic

=NHAT0240

Diagnostic trouble code TP SEN/CIRC A/T with CONSULT-II or P1705 without CONSULT-II is detected when TCM receives an excessively low or high voltage from the sensor.

Possible Cause

NHAT0241

Check the following items.

- Harness or connectors
  (The sensor circuit is open or shorted.)
- Accelerator pedal position sensor

SELECT SYSTEM
A/T
ENGINE

SAT014K

SELECT DIAG MODE
WORK SUPPORT
SELF DIAGNOSIS
DATA MONITOR
CAN DIAG SUPPORT MNTR
FUNCTION TEST
DTC WORK SUPPORT

SAT860K

SELECT SYSTEM
A/T
ENGINE

SAT014K

SELECT DIAG MODE
WORK SUPPORT
SELF-DIAG RESULTS
DATA MONITOR
DATA MONITOR (SPEC)
ACTIVE TEST
DTC & SRT CONFIRMATION

SEF949Y

Diagnostic Trouble Code (DTC) Confirmation Procedure

NHAT0242

CAUTION:

Always drive vehicle at a safe speed.

NOTE:

If “DTC Confirmation Procedure” has been previously conducted, always turn ignition switch OFF and wait at least 10 seconds before conducting the next test.

After the repair, perform the following procedure to confirm the malfunction is eliminated.

WITH CONSULT-II

NHAT0242S01

1) Turn ignition switch ON and select “DATA MONITOR” mode for “A/T” with CONSULT-II.

Accelerator pedal condition	Accelerator pedal position sensor (THRTL POS SEN)
Fully released	Approx. 0.5V
Partially depressed	0.5 - 4V
Fully depressed	Approx. 4V

If the check result is NG, go to “DIAGNOSTIC PROCEDURE”, AT-192.
If the check result is OK, go to following step.

2) Turn ignition switch ON and select “DATA MONITOR” mode for “ENGINE” with CONSULT-II.
3) Start engine and maintain the following conditions for at least 3 consecutive seconds. Then release accelerator pedal completely.
VHCL SPEED SE: 10 km/h (6 MPH) or more
THRTL POS SEN (accelerator pedal position sensor): Approximately 3V or less
Selector lever: D position
If the check result is NG, go to “DIAGNOSTIC PROCEDURE”, AT-192.
If the check result is OK, go to following step.
4) Maintain the following conditions for at least 3 consecutive seconds. Then release accelerator pedal completely.
VHCL SPEED SE: 10 km/h (6 MPH) or more
Accelerator pedal: Wide open throttle
Selector lever: D position

WITH GST

NHAT0242S02

Follow the procedure “With CONSULT-II”.

Wiring Diagram — AT — TPS

NHAT0074

AT-TPS-01

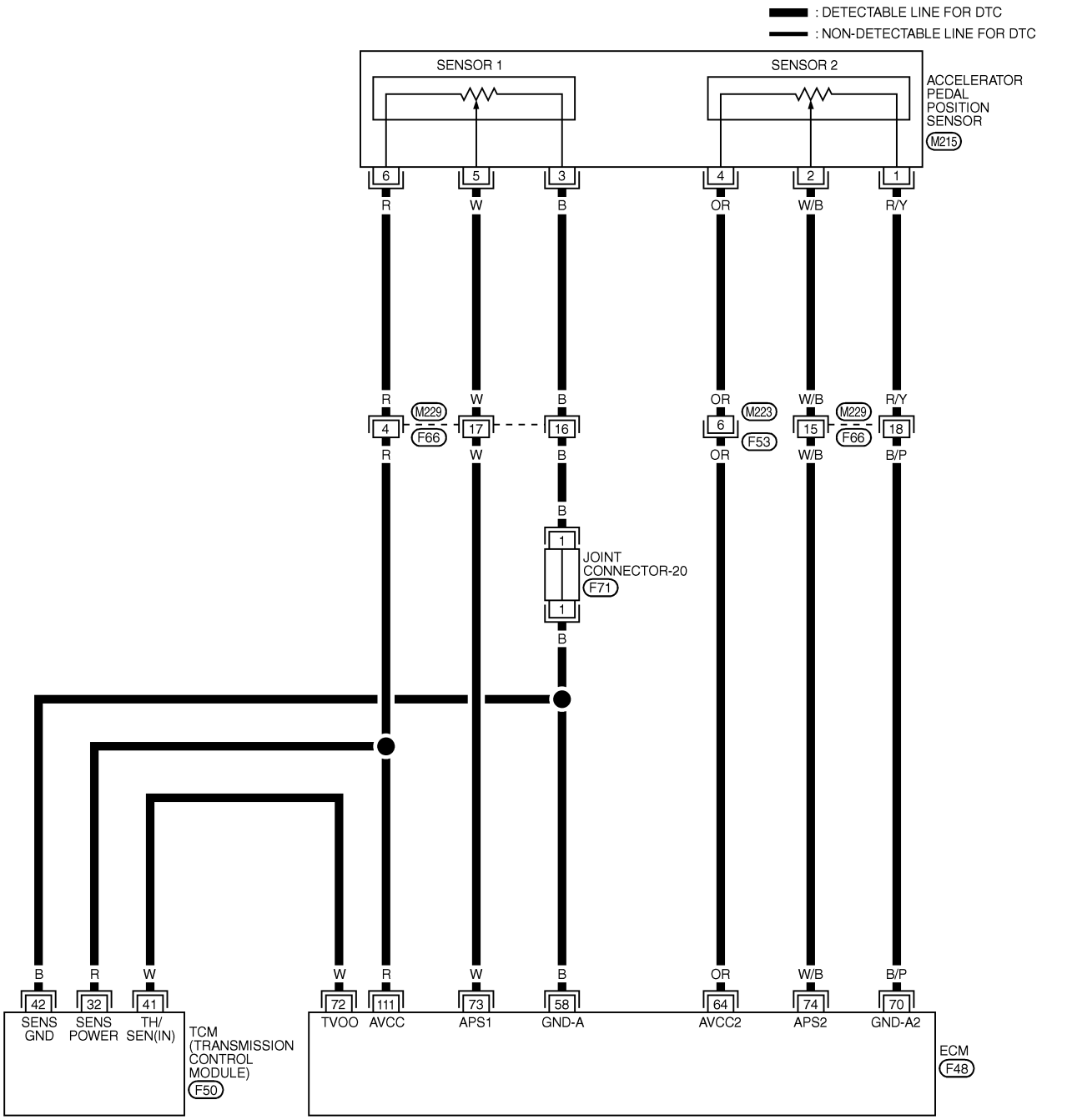

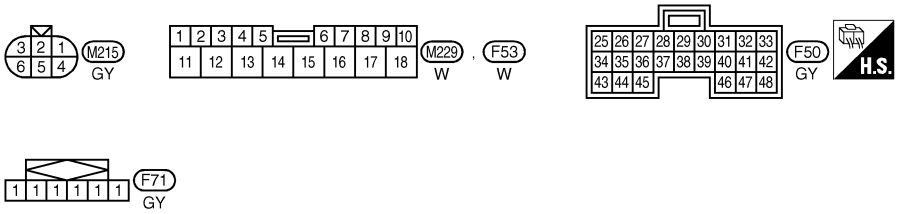

REFER TO THE FOLLOWING.
F48 -ELECTRICAL UNITS

MAT485B

Diagnostic Procedure

NHAT0075

1	CHECK DTC WITH ECM	
● Check DTC with CONSULT-II “ENGINE”. Turn ignition switch ON and select “SELF DIAGNOSTIC RESULTS” mode for “ENGINE” with CONSULT-II. Refer to EC-90, “Malfunction Indicator Lamp (MIL)”.		
OK or NG		
OK (with CONSULT-II)	▶	GO TO 2.
OK (without CONSULT-II)	▶	GO TO 3.
NG	▶	Check accelerator pedal position sensor circuit for engine control. Refer to EC-650, EC-657, EC-670, “DTC P2122, P2123, P2127, P2128, P2138 APP SENSOR”.

2	CHECK INPUT SIGNAL (With CONSULT-II)	
With CONSULT-II 1. Turn ignition switch to ON position. (Do not start engine.) 2. Select “TCM INPUT SIGNALS” in “DATA MONITOR” mode for “A/T” with CONSULT-II. 3. Read out the value of “THRTL POS SEN”. **Voltage:** **Fully-closed throttle:** **Approximately 0.5V** **Fully-open throttle:** **Approximately 4V**		
OK or NG		
OK	▶	GO TO 4.
NG	▶	Check harness for short or open between ECM and TCM regarding accelerator pedal position sensor circuit.

DATA MONITOR	
MONITORING	
VHCL/S SE-A/T	XXX km/h
VHCL/S SE-MTR	XXX km/h
THRTL POS SEN	XXX V
FLUID TEMP SE	XXX V
BATTERY VOLT	XXX V

SAT614J

3	CHECK INPUT SIGNAL (Without CONSULT-II)

Without CONSULT-II

1. Turn ignition switch to ON position. (Do not start engine.)
2. Check voltage between TCM harness connector F50 terminals 41 (W) and 42 (B) while accelerator pedal is depressed slowly.

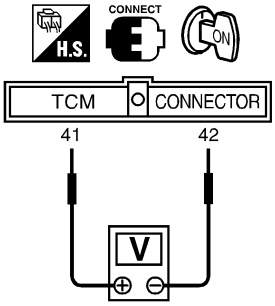

SAT349JC

Voltage:
Fully-closed throttle valve:
Approximately 0.5V
Fully-open throttle valve:
Approximately 4V
(Voltage rises gradually in response to throttle position.)

OK or NG

OK	▶	GO TO 4.
NG	▶	Check harness for short or open between ECM and TCM regarding accelerator pedal position sensor circuit.

4	CHECK DTC

Perform Diagnostic Trouble Code (DTC) confirmation procedure, AT-190.

OK or NG

OK	▶	**INSPECTION END**
NG	▶	GO TO 5.

5	CHECK TCM INSPECTION

1. Perform TCM input/output signal inspection.
2. If NG, recheck TCM pin terminals for damage or loose connection with harness connector.

OK or NG

OK	▶	**INSPECTION END**
NG	▶	Repair or replace damaged parts.

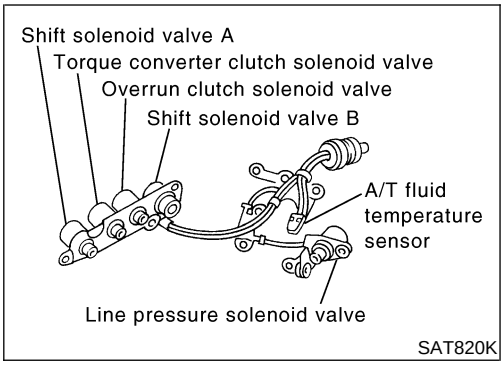

Description

NHAT0076

The overrun clutch solenoid valve is activated by the TCM in response to signals sent from the park/neutral position (PNP) switch, 3rd position switch, vehicle speed and accelerator pedal position sensor (throttle position sensors). The overrun clutch operation will then be controlled.

TCM TERMINALS AND REFERENCE VALUE

NHAT0076S01

Remarks: Specification data are reference values.

Terminal No.	Wire color	Item	Condition		Judgement standard (Approx.)
20	BR/Y	Overrun clutch solenoid valve		When overrun clutch solenoid valve operates.	Battery voltage
				When overrun clutch solenoid valve does not operate.	0V

On Board Diagnosis Logic

NHAT0243

Diagnostic trouble code O/R CLTCH SOL/CIRC with CONSULT-II or P1760 without CONSULT-II is detected when TCM detects an improper voltage drop when it tries to operate the solenoid valve.

Possible Cause

NHAT0244

Check the following items.

- Harness or connectors
  (The solenoid circuit is open or shorted.)
- Overrun clutch solenoid valve

SELECT SYSTEM
A/T
ENGINE

SAT014K

SELECT DIAG MODE
WORK SUPPORT
SELF-DIAG RESULTS
DATA MONITOR
DATA MONITOR (SPEC)
ACTIVE TEST
DTC & SRT CONFIRMATION

SEF949Y

Diagnostic Trouble Code (DTC) Confirmation Procedure

NHAT0245

CAUTION:

Always drive vehicle at a safe speed.

NOTE:

If "DIAGNOSTIC TROUBLE CODE CONFIRMATION PROCEDURE" has been previously conducted, always turn ignition switch OFF and wait at least 10 seconds before conducting the next test.

TESTING CONDITION:

Always drive vehicle on a level road to improve accuracy of test.

After the repair, perform the following procedure to confirm the malfunction is eliminated.

WITH CONSULT-II

NHAT0245S01

1) Turn ignition switch ON and select "DATA MONITOR" mode for "ENGINE" with CONSULT-II.
2) Start engine.
3) Accelerate vehicle to a speed of more than 10 km/h (6 MPH) with D position.
4) Release accelerator pedal completely with 3rd position.

WITH GST

NHAT0245S02

Follow the procedure "With CONSULT-II".

Wiring Diagram — AT — OVRCSV

NHAT0077

AT-OVRCSV-01

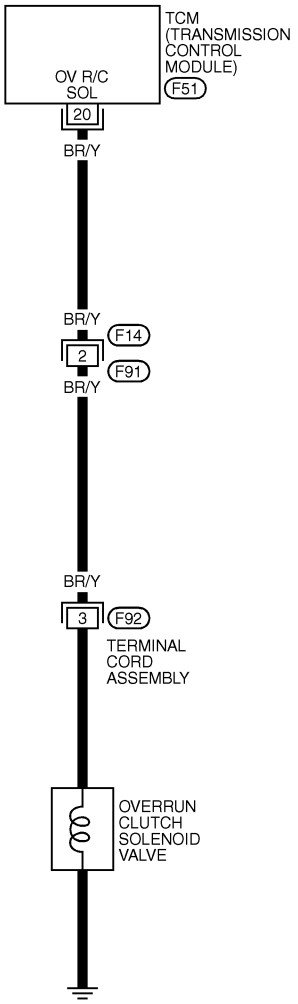

: DETECTABLE LINE FOR DTC
: NON-DETECTABLE LINE FOR DTC

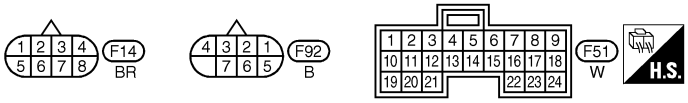

MAT486B

Diagnostic Procedure

NHAT0078

1	CHECK SOLENOID VALVE RESISTANCE

1. Turn ignition switch to OFF position.
2. Disconnect terminal cord assembly connector in engine compartment.
3. Check resistance between terminal 3 (BR/Y) and ground.

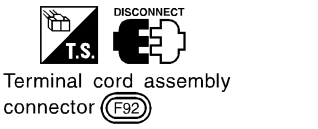

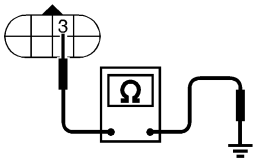

Resistance: 20 - 30Ω

SAT637JE

OK or NG

OK	▶	GO TO 3.
NG	▶	GO TO 2.

2	CHECK SOLENOID VALVE OPERATION

1. Remove control valve assembly. Refer to AT-282.
2. Check the following items:
- Overrun clutch solenoid valve
- Operation check

i. Check solenoid valve by listening for its operating sound while applying battey voltage to the terminal and ground.

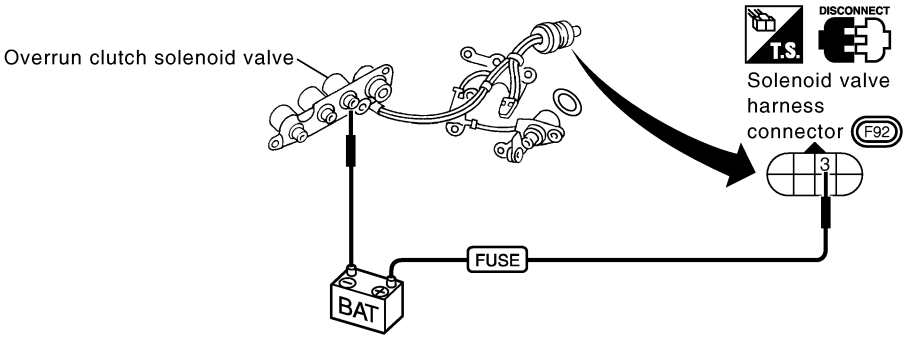

SAT831K

- Harness of terminal cord assembly for short or open

OK or NG

OK	▶	GO TO 3.
NG	▶	Repair or replace damaged parts.

3	CHECK POWER SOURCE CIRCUIT	
1. Turn ignition switch to OFF position. 2. Disconnect TCM harness connector. 3. Check continuity between terminal cord assembly connector terminal 3 (BR/Y) and TCM harness connector F51 terminal 20 (BR/Y). Refer to wiring diagram — AT — OVRCVS. **Continuity should exist.** If OK, check harness for short to ground and short to power. 4. Reinstall any part removed.		
OK or NG		
OK	▶	GO TO 4.
NG	▶	Repair open circuit or short to ground or short to power in harness or connectors.

4	CHECK DTC	
Perform Diagnostic Trouble Code (DTC) confirmation procedure, AT-195.		
OK or NG		
OK	▶	**INSPECTION END**
NG	▶	GO TO 5.

5	CHECK TCM INSPECTION	
1. Perform TCM input/output signal inspection. 2. If NG, recheck TCM pin terminals for damage or loose connection with harness connector.		
OK or NG		
OK	▶	**INSPECTION END**
NG	▶	Repair or replace damaged parts.

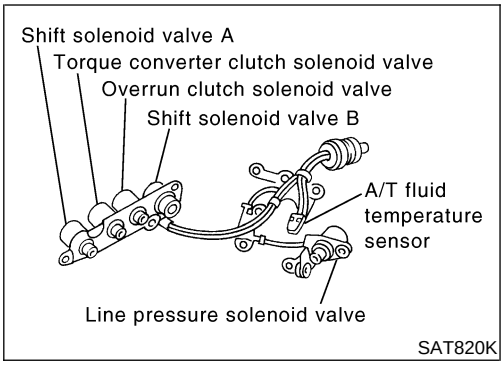

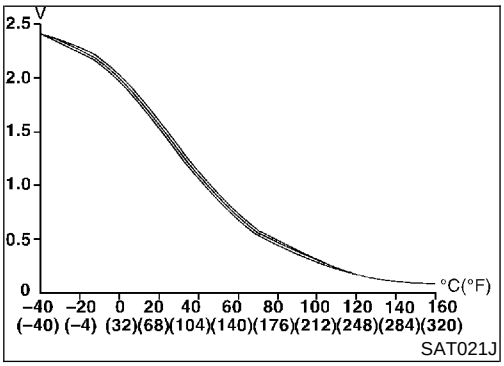

Description

NHAT0079

The A/T fluid temperature sensor detects the A/T fluid temperature and sends a signal to the TCM.

CONSULT-II REFERENCE VALUE IN DATA MONITOR MODE

NHAT0079S01

Remarks: Specification data are reference values.

Monitor item	Condition	Specification (Approximately)	
A/T fluid temperature sensor	Cold [20°C (68°F)] ↓ Hot [80°C (176°F)]	1.5V ↓ 0.5V	2.5 kΩ ↓ 0.3 kΩ

TCM TERMINALS AND REFERENCE VALUE

NHAT0079S02

Remarks: Specification data are reference values.

Terminal No.	Wire color	Item	Condition		Judgement standard (Approx.)
10	R/Y	Power source	ON	When turning ignition switch to ON.	Battery voltage
				When turning ignition switch to OFF.	0V
19	R/Y	Power source	Same as No. 10		
28	Y/R	Power source (Memory back-up)	ON or OFF	When turning ignition switch to OFF.	Battery voltage
				When turning ignition switch to ON.	Battery voltage
42	B	Sensor ground	—		0V
47	G	A/T fluid temperature sensor	ON	When ATF temperature is 20°C (68°F).	1.5V
				When ATF temperature is 80°C (176°F).	0.5V

On Board Diagnosis Logic

NHAT0246

Diagnostic trouble code BATT/FLUID TEMP SEN with CONSULT-II or 8th judgement flicker without CONSULT-II is detected when TCM receives an excessively low or high voltage from the sensor.

Possible Cause

NHAT0247

Check the following items.

- Harness or connectors
  (The sensor circuit is open or shorted.)
- A/T fluid temperature sensor

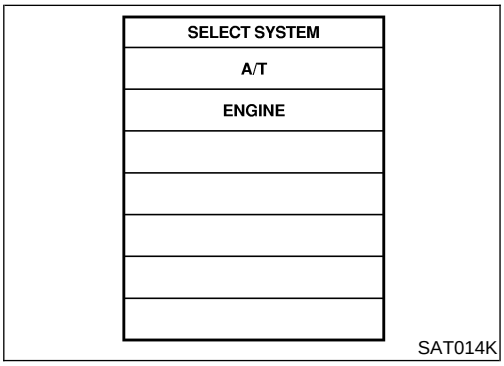

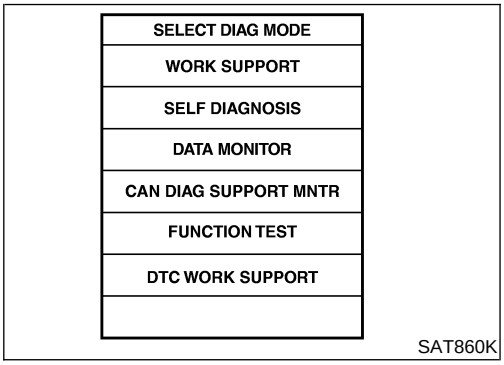

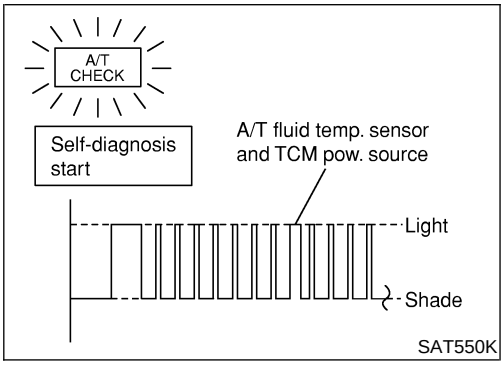

Diagnostic Trouble Code (DTC) Confirmation Procedure

NHAT0248

After the repair, perform the following procedure to confirm the malfunction is eliminated.

WITH CONSULT-II

NHAT0248S01

1) Start engine.
2) Select “DATA MONITOR” mode for “A/T” with CONSULT-II.
3) Drive vehicle under the following conditions:
   Selector lever in D, vehicle speed higher than 20 km/h (12 MPH).

WITHOUT CONSULT-II

NHAT0248S02

1) Start engine.
2) Drive vehicle under the following conditions:
   Selector lever in D, vehicle speed higher than 20 km/h (12 MPH).
3) Perform self-diagnosis.
   Refer to AT-52, “TCM SELF-DIAGNOSTIC PROCEDURE (NO TOOLS)”.

Wiring Diagram — AT — BA/FTS

NHAT0080

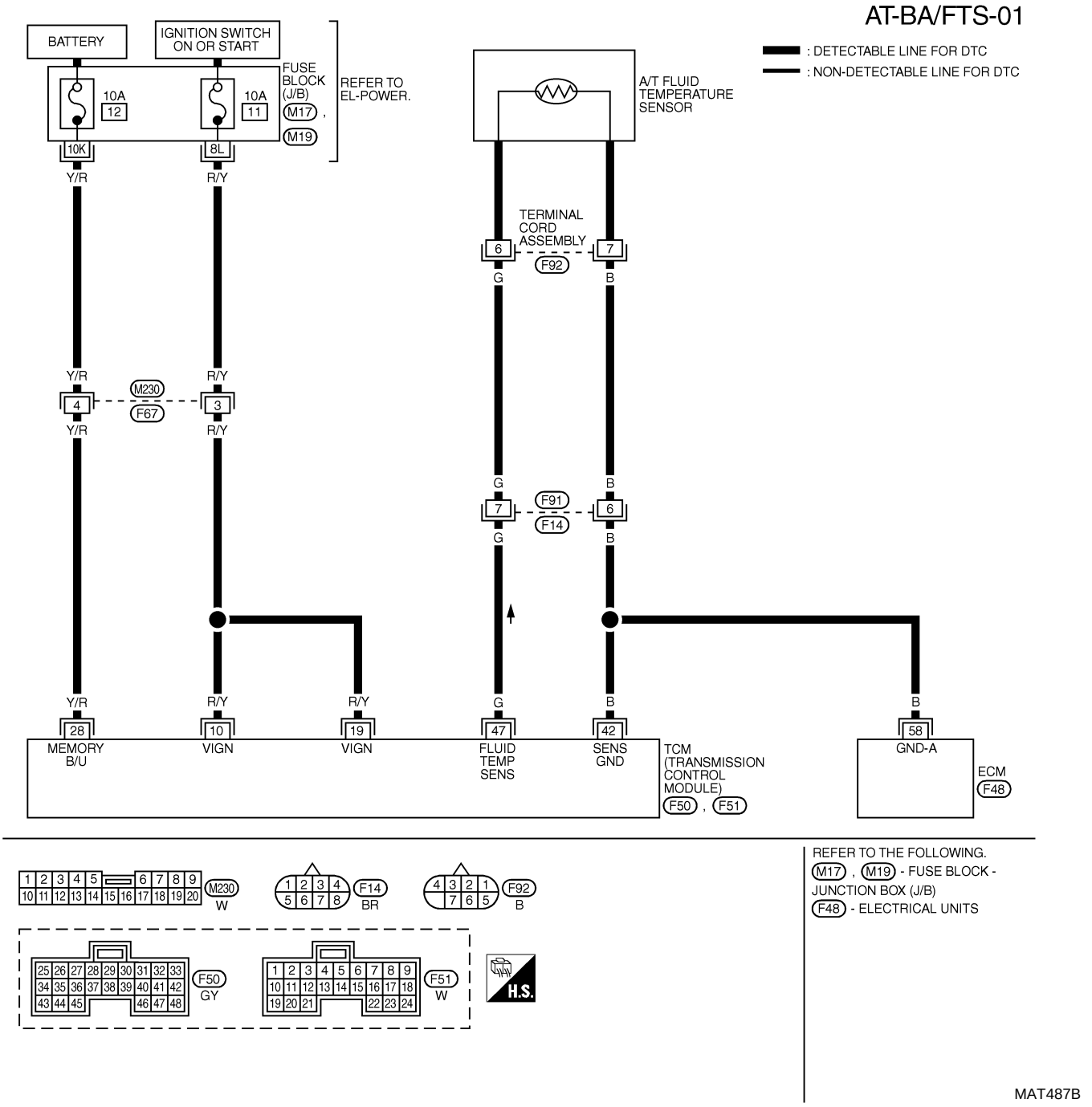

Diagnostic Procedure

=NHAT0081

1	INSPECTION START	
Do you have CONSULT-II?		
	Yes or No	
Yes	▶	GO TO 2.
No	▶	GO TO 9.

2	CHECK INPUT SIGNAL OF A/T FLUID TEMPERATURE SENSOR (With CONSULT-II)	

With CONSULT-II

1. Start engine.
2. Select “TCM INPUT SIGNALS” in “DATA MONITOR” mode for “A/T” with CONSULT-II.
3. Read out the value of “FLUID TEMP SE”.

DATA MONITOR	
MONITORING	
VHCL/S SE-A/T	XXX km/h
VHCL/S SE-MTR	XXX km/h
THRTL POS SEN	XXX V
FLUID TEMP SE	XXX V
BATTERY VOLT	XXX V

SAT614J

Voltage:
Cold [20°C (68°F)] → Hot [80°C (176°F)]:
Approximately 1.5V → 0.5V

OK or NG

OK	▶	GO TO 10.
NG	▶	GO TO 3.

3	DETECT MALFUNCTIONING ITEM	

Check the following items:

- Harness for short or open between TCM, ECM and terminal cord assembly
- Ground circuit for ECM
  Refer to EC-153, “TROUBLE DIAGNOSIS FOR POWER SUPPLY”.

OK or NG

OK	▶	GO TO 4.
NG	▶	Repair or replace damaged parts.

4	CHECK TCM POWER SOURCE STEP 1

1. Turn ignition switch to ON position.
   (Do not start engine.)
2. Check voltage between TCM harness connectors F50, F51 terminals 10 (R/Y), 19 (R/Y), 28 (Y/R) and ground.

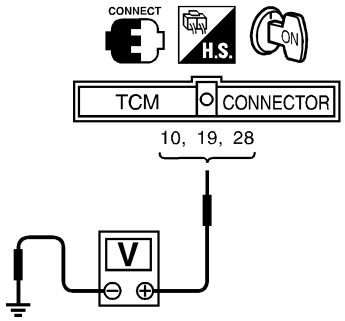

Voltage:
Battery voltage

SAT611J

OK or NG

OK	▶	GO TO 5.
NG	▶	GO TO 6.

5	CHECK TCM POWER SOURCE STEP 2

1. Turn ignition switch to OFF position.
2. Check voltage between TCM harness connector F50 terminal 28 (Y/R) and ground.

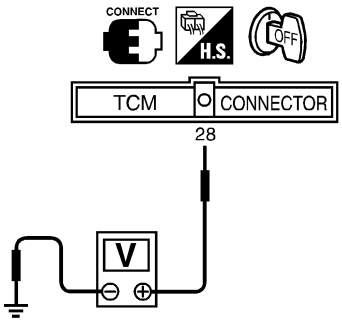

Voltage:
Battery voltage

SAT612JG

OK or NG

OK	▶	GO TO 7.
NG	▶	GO TO 6.

6	DETECT MALFUNCTIONING ITEM

Check the following items:
- Harness for short or open between battery, ignition switch and TCM
- Ignition switch and fuse
  Refer to EL-11, "POWER SUPPLY ROUTING".

OK or NG

OK	▶	GO TO 7.
NG	▶	Repair or replace damaged parts.

7	CHECK A/T FLUID TEMPERATURE SENSOR WITH TERMINAL CORD ASSEMBLY

1. Turn ignition switch to OFF position.
2. Disconnect terminal cord assembly connector in engine compartment.
3. Check resistance between terminals 6 (G) and 7 (B) when A/T is cold.

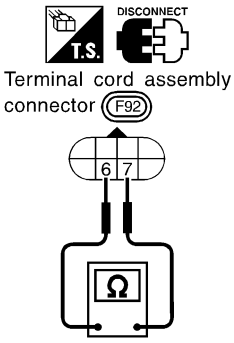

Resistance:
Cold [20°C (68°F)]
Approximately 2.5 kΩ

SAT616JA

4. Reinstall any part removed.

OK or NG

OK	▶	GO TO 10.
NG	▶	GO TO 8.

8	DETECT MALFUNCTIONING ITEM

1. Remove oil pan. Refer to AT-282.
2. Check the following items:

- A/T fluid temperature sensor

i. Check resistance between two terminals while changing temperature as shown below.

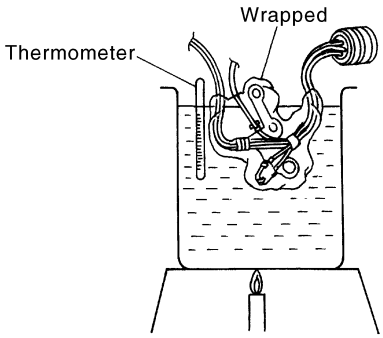

SAT821K

Temperature °C (°F)	Resistance
20 (68)	Approximately 2.5 kΩ
80 (176)	Approximately 0.3 kΩ

MTBL0210

- Harness of terminal harness assembly for short or open

OK or NG

OK	▶	GO TO 10.
NG	▶	Repair or replace damaged parts.

9	CHECK INPUT SIGNAL OF A/T FLUID TEMPERATURE SENSOR (Without CONSULT-II)

Without CONSULT-II

1. Start engine.
2. Check voltage between TCM harness connector F50 terminal 47 (G) and ground while warming up A/T.

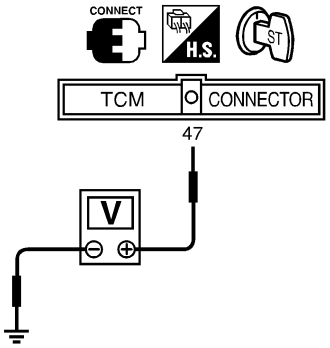

SAT354JB

Voltage:
Cold [20°C (68°F)] → Hot [80°C (176°F)]:
Approximately 1.5V → 0.5V

3. Turn ignition switch to OFF position.
4. Disconnect TCM harness connector.
5. Check resistance between TCM harness connector F50 terminal 42 (B) and ground. Refer to wiring diagram — AT — BA/FTS.

Continuity should exist.

OK or NG

OK	▶	GO TO 10.
NG	▶	GO TO 3.

10	CHECK DTC

Perform Diagnostic Trouble Code (DTC) confirmation procedure, AT-200.

OK or NG

OK	▶	**INSPECTION END**
NG	▶	GO TO 11.

11	CHECK TCM INSPECTION

1. Perform TCM input/output signal inspection.
2. If NG, recheck TCM pin terminals for damage or loose connection with harness connector.

OK or NG

OK	▶	**INSPECTION END**
NG	▶	Repair or replace damaged parts.

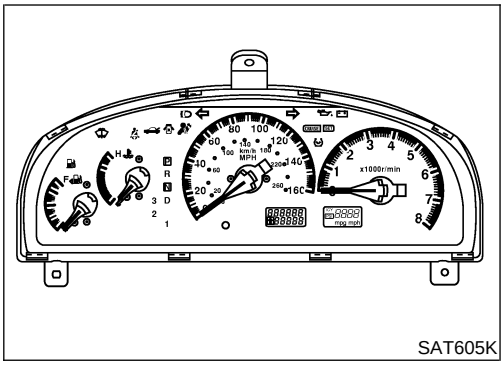

Description

NHAT0082

The vehicle speed sensor·MTR is built into the speedometer assembly. The sensor functions as an auxiliary device to the revolution sensor when it is malfunctioning. The TCM will then use a signal sent from the vehicle speed sensor·MTR.

TCM TERMINALS AND REFERENCE VALUE

NHAT0082S01

Remarks: Specification data are reference values.

Terminal No.	Wire color	Item	Condition		Judgement standard (Approx.)
40	PU/R	Vehicle speed sensor		When moving vehicle at 2 to 3 km/h (1 to 2 MPH) for 1 m (3 ft) or more.	Intermittently changes between approx. 0V and approx. 4.5V.
42	B	Sensor ground	—		0V

On Board Diagnosis Logic

NHAT0249

Diagnostic trouble code VHCL SPEED SEN·MTR with CONSULT-II or 2nd judgement flicker without CONSULT-II is detected when TCM does not receive the proper voltage signal from the sensor.

Possible Cause

NHAT0250

Check the following items.

- Harness or connectors
  (The sensor circuit is open or shorted.)
- Combination meter
- ABS/TCS control unit (with TCS)
- Vehicle speed sensor (with VDC)

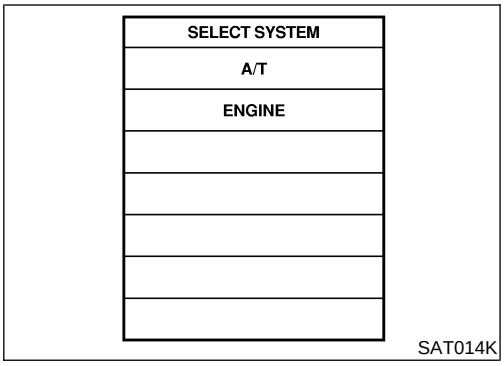

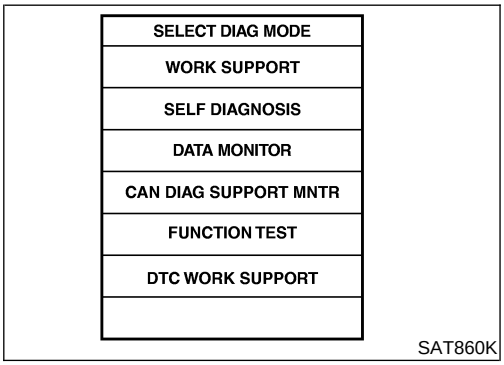

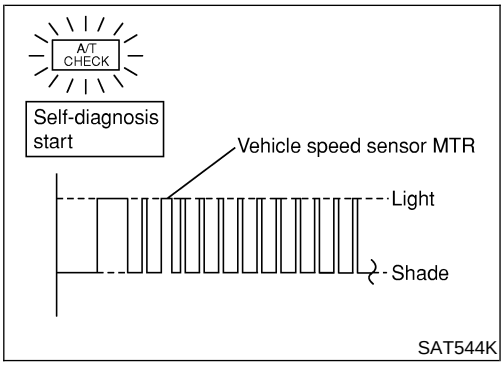

Diagnostic Trouble Code (DTC) Confirmation Procedure

NHAT0251

CAUTION:

- **Always drive vehicle at a safe speed.**
- **If conducting this "DTC Confirmation Procedure" again, always turn ignition switch OFF and wait at least 10 seconds before continuing.**

After the repair, perform the following procedure to confirm the malfunction is eliminated.

WITH CONSULT-II

NHAT0251S01

1) Turn ignition switch ON and select "DATA MONITOR" mode for "A/T" with CONSULT-II.
2) Start engine and accelerate vehicle from 0 to 25 km/h (0 to 16 MPH).

WITHOUT CONSULT-II

NHAT0251S02

1) Start engine.
2) Drive vehicle under the following conditions:
   Selector lever in D and vehicle speed higher than 25 km/h (16 MPH).
3) Perform self-diagnosis.
   Refer to AT-52, "TCM SELF-DIAGNOSTIC PROCEDURE (NO TOOLS)".

Wiring Diagram — AT — VSSMTR

NHAT0083

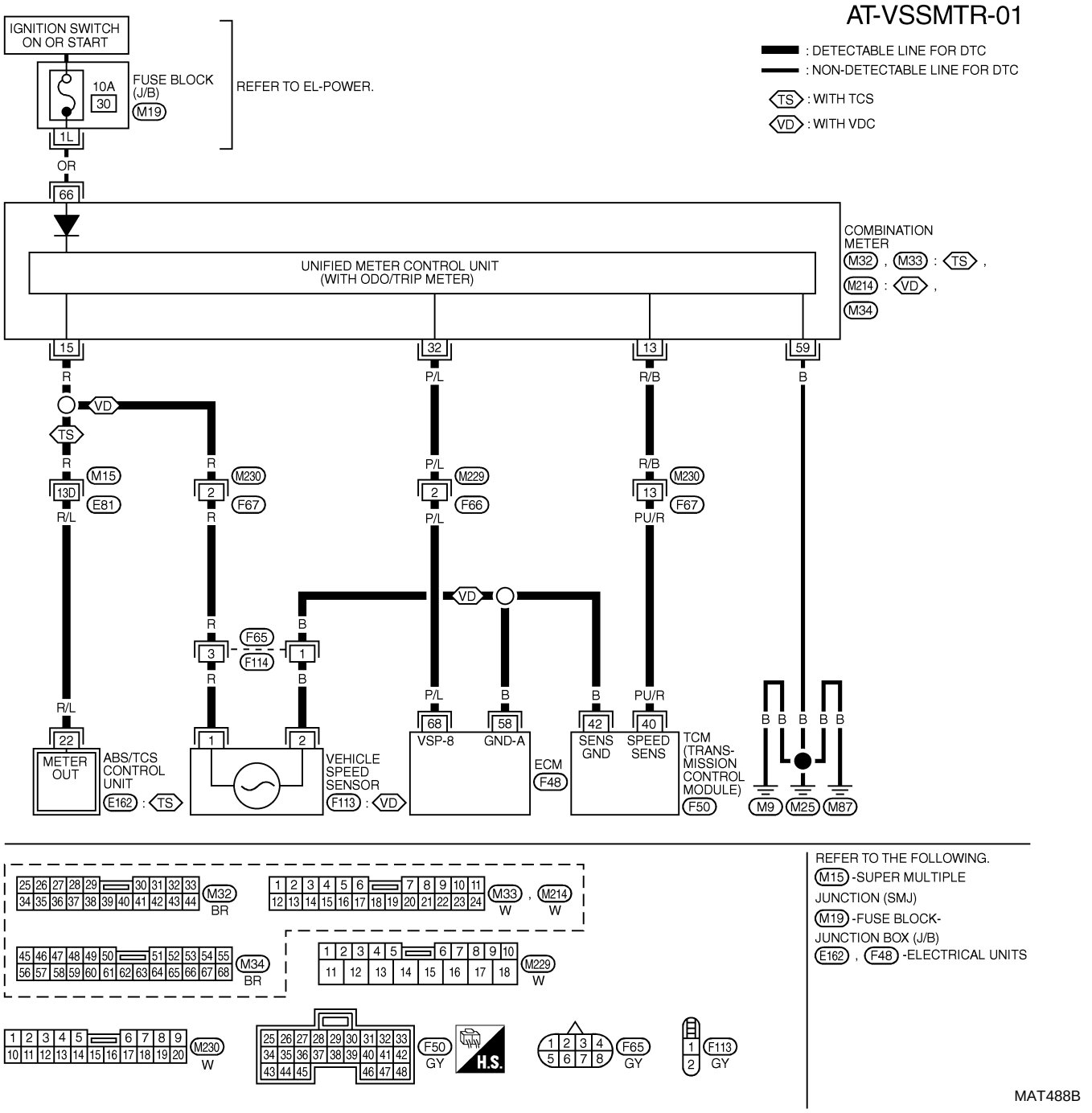

Diagnostic Procedure

NHAT0084

1	CHECK INPUT SIGNAL

With CONSULT-II

1. Start engine.
2. Select “TCM INPUT SIGNALS” in “DATA MONITOR” mode for “A/T” with CONSULT-II.
3. Read out the value of “VHCL/S SE·MTR” while driving.
   Check the value changes according to driving speed.

DATA MONITOR	
MONITORING	
VHCL/S SE-A/T	XXX km/h
VHCL/S SE-MTR	XXX km/h
THRTL POS SEN	XXX V
FLUID TEMP SE	XXX V
BATTERY VOLT	XXX V

SAT614J

Without CONSULT-II

1. Start engine.
2. Check voltage between TCM harness connector F50 terminal 40 (PU/R) and ground while driving at 2 to 3 km/h (1 to 2 MPH) for 1 m (3 ft) or more.

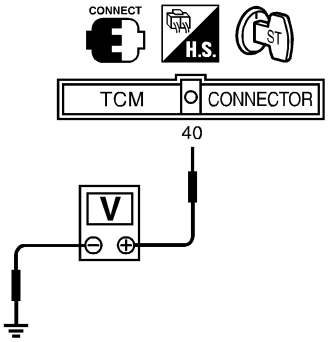

SAT356JB

Voltage:
Intermittently changes between approx. 0V and approx. 4.5V.

OK or NG

OK	▶	GO TO 3.
NG	▶	GO TO 2.

2	DETECT MALFUNCTIONING ITEM

Check the following items:

- Combination meter
  Refer to EL-125, “METERS AND GAUGES”.
- Harness for short or open between TCM and combination meter
- ABS/TCS control unit (with TCS)
  Refer to BR-46, “ON BOARD DIAGNOSTIC SYSTEM DESCRIPTION”.
- Harness for short or open between combination meter and ABS/TCS control unit (with TCS)
- Vehicle speed sensor and ground circuit for vehicle speed sensor (with VDC)
  Refer to EL-125, “METERS AND GAUGES”.
- Harness for short or open between combination meter and vehicle speed sensor (with VDC)

OK or NG

OK	▶	GO TO 3.
NG	▶	Repair or replace damaged parts.

3	CHECK DTC	
Perform Diagnostic Trouble Code (DTC) confirmation procedure, AT-207.		
	OK or NG	
OK	▶	**INSPECTION END**
NG	▶	GO TO 4.

4	CHECK TCM INSPECTION	
1. Perform TCM input/output signal inspection. 2. If NG, recheck TCM pin terminals for damage or loose connection with harness connector.		
	OK or NG	
OK	▶	**INSPECTION END**
NG	▶	Repair or replace damaged parts.

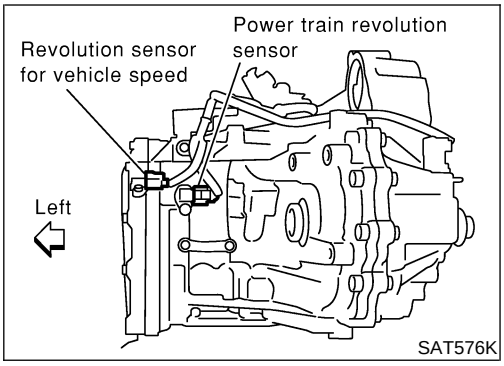

Description

NHAT0272

The power train revolution sensor detects foward clutch drum rpm (revolutions per minute). It is located on the input side of the automatic transmission. The vehicle speed sensor A/T (Revolution sensor) is located on the output side of the automatic transmission. With the two sensors, input and output shaft rpms are accurately detected. The result is optimal shift timing during deceleration and improved shifting.

TCM TERMINALS AND REFERENCE VALUE

NHAT0272S01

Remarks: Specification data are reference values.

Terminal No.	Wire color	Item	Condition		Judgement standard (Approx.)
38	PU	Power train revolution sensor		When moving at 20 km/h (12 MPH), use the CONSULT-II pulse frequency measuring function.*1 **CAUTION:** **Connect the diagnosis data link cable to the vehicle diagnosis connector.** *1: A circuit tester cannot be used to test this item.	240 Hz
				When vehicle parks.	Under 1.3V or over 4.5V
42	B	Sensor ground		—	0V

On Board Diagnosis Logic

NHAT0279

Diagnostic trouble code	Malfunction is detected when ...	Check item (Possible cause)
: TURBINE REV	TCM does not receive the proper voltage signal from the sensor.	• Harness or connectors (The sensor circuit is open or shorted.) • Power train revolution sensor
: 10th judgement flicker		

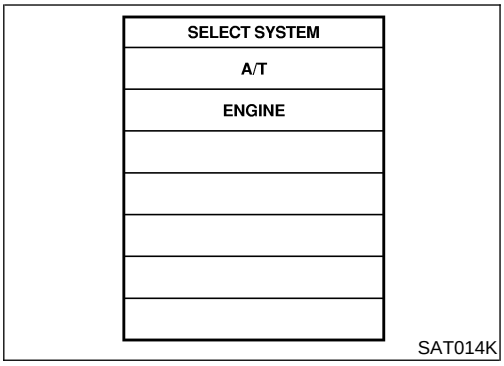

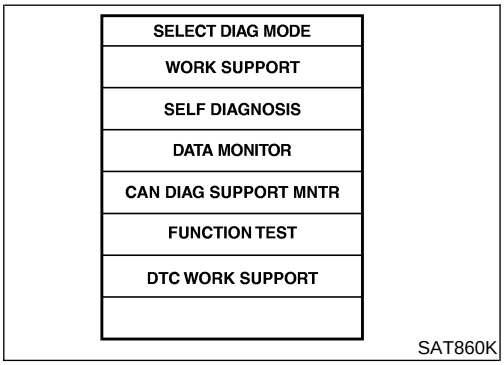

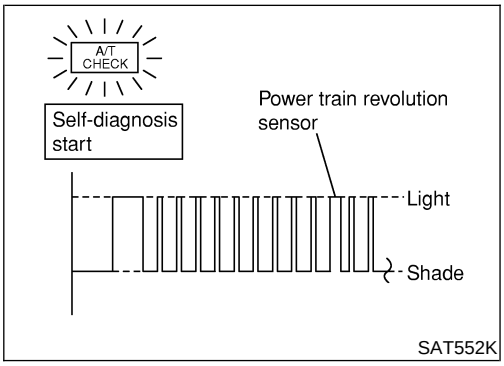

Diagnostic Trouble Code (DTC) Confirmation Procedure

=NHAT0277

CAUTION:

- **Always drive vehicle at a safe speed.**
- **If conducting this "DTC CONFIRMATION PROCEDURE" again, always turn ignition switch "OFF" and wait at least 5 seconds before continuing.**

After the repair, perform the following procedure to confirm the malfunction is eliminated.

WITH CONSULT-II

NHAT0277S01

1) Start engine.
2) Select "DATA MONITOR" mode for "A/T" with CONSULT-II.
3) Drive vehicle under the following conditions:
   Selector lever in "D", vehicle speed higher than 40 km/h (25 MPH), engine speed higher than 1,500 rpm, throttle opening greater than 1.0/8 of the full throttle position and driving for more than 5 seconds.

NO TOOLS

NHAT0277S02

1) Start engine.
2) Drive vehicle under the following conditions:
   Selector lever in "D", vehicle speed higher than 40 km/h (25 MPH), engine speed higher than 1,500 rpm, throttle opening greater than 1.0/8 of the full throttle position and driving for more than 5 seconds.
3) Perform self-diagnosis.
   Refer to AT-52, "TCM SELF-DIAGNOSTIC PROCEDURE (NO TOOLS)".

Wiring Diagram — AT — P/T SEN-01

NHAT0276

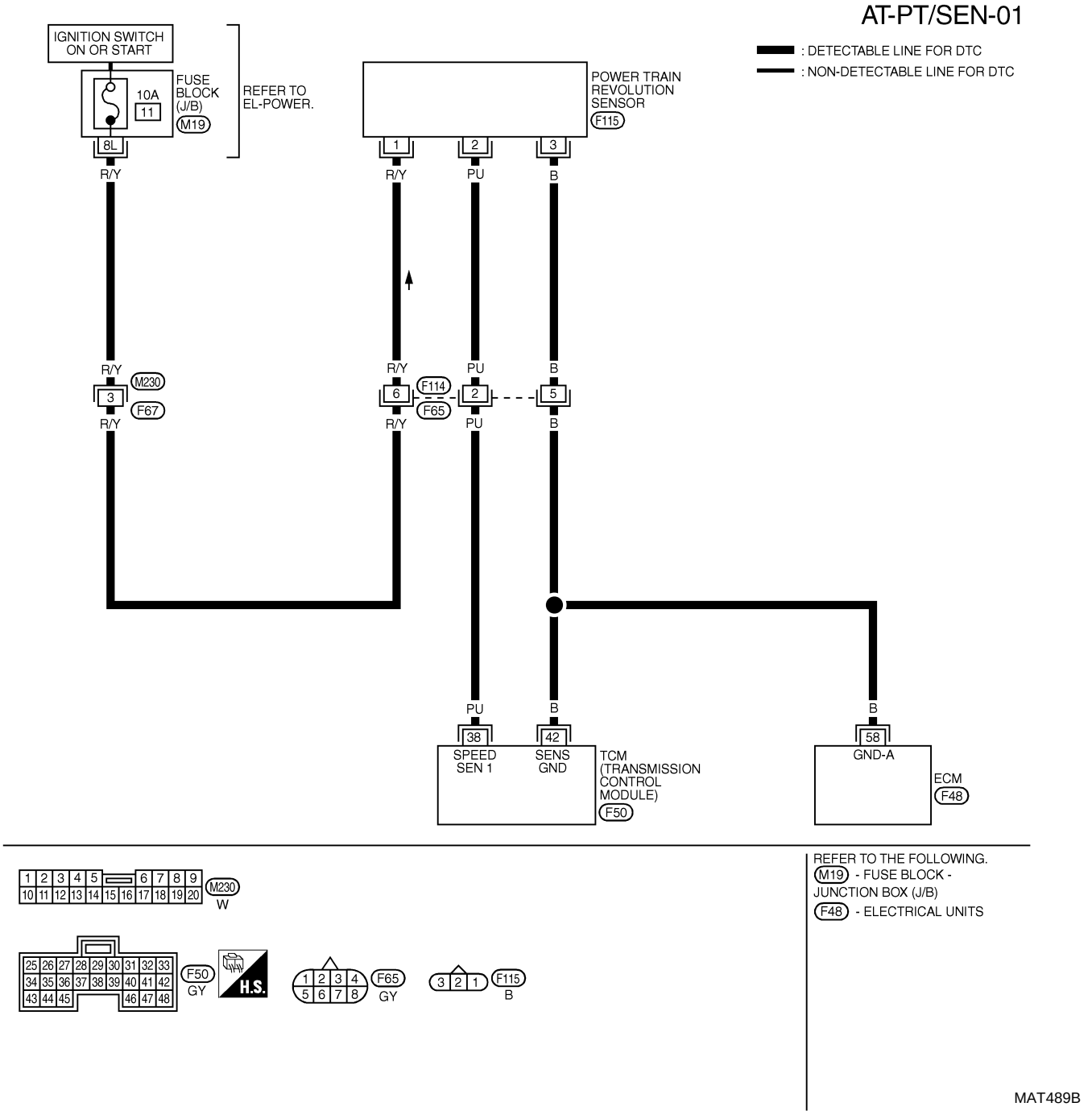

Diagnostic Procedure

NHAT0274

1 CHECK INPUT SIGNAL

With CONSULT-II

1. Start engine.
2. Select “TCM INPUT SIGNALS” in “DATA MONITOR” mode for “A/T” with CONSULT-II.
3. Read out the value of “TURBINE REV”. Check the value changes according to engine speed.
   NOTE:
   “TURBINE REV” in “TCM INPUT SIGNALS” means power train revolution sensor.

DATA MONITOR	
MONITORING	
ENGINE SPEED	XXX rpm
TURBINE REV	XXX rpm
OVERDRIVE SW	ON
PN POSI SW	OFF
R POSITION SW	OFF

SAT740J

OK or NG

OK	▶	GO TO 4.
NG	▶	GO TO 2.

2 CHECK POWER TRAIN REVOLUTION SENSOR (With CONSULT-II)

With CONSULT-II

1. Start engine.

Condition	Judgement standard (Approx.)
When moving at 20 km/h (12 MPH), use the CONSULT-II pulse frequency measuring function. *1 **CAUTION:** **Connect the diagnosis data link cable to the vehicle diagnosis connector.** *1: A circuit tester cannot be used to test this item.	240 Hz
When vehicle parks.	Under 1.3V or over 4.5V

MTBL1177

OK or NG

OK	▶	GO TO 4.
NG	▶	GO TO 3.

3 CHECK POWER TRAIN REVOLUTION SENSOR (Without CONSULT-II)

Without CONSULT-II

Check the power train revolution sensor. Refer to AT-215, “Component Inspection”.

OK or NG

OK	▶	Harness for short or open between TCM, ECM and revolution sensor
NG	▶	Replace power train revolution sensor.

4	CHECK DTC	
Perform "Diagnostic Trouble Code (DTC) confirmation procedure", AT-212.		
OK or NG		
OK	▶	**INSPECTION END**
NG	▶	GO TO 5.

5	CHECK TCM INSPECTION	
1. Perform TCM input/output signal inspection. 2. If NG, recheck TCM pin terminal for damage or loose connection with harness connector.		
OK or NG		
OK	▶	**INSPECTION END**
NG	▶	Repair or replace damaged parts.

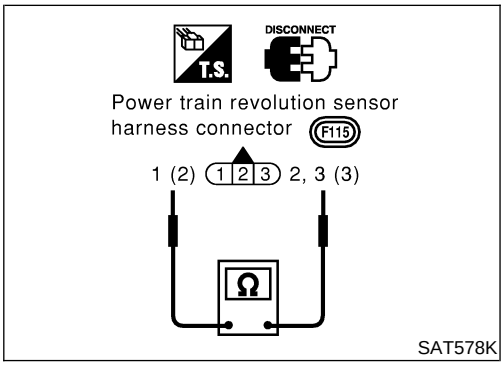

Component Inspection

NHAT0275

POWER TRAIN REVOLUTION SENSOR

NHAT0275S01

- Check resistance between terminals 1 (R/Y), 2 (PU) and 3 (B).

Terminal No. (Wire color)		Resistance (Approx.)
1 (R/Y)	2 (PU)	No continuity
1 (R/Y)	3 (B)	No continuity
2 (PU)	3 (B)	2.4 - 2.8 kΩ

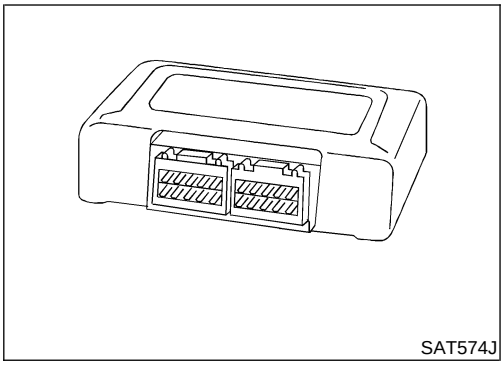
SAT574J

Description

NHAT0085

The TCM consists of a microcomputer and connectors for signal input and output and for power supply. The unit controls the A/T.

On Board Diagnosis Logic

NHAT0258

Diagnostic trouble code CONTROL UNIT (RAM), CONTROL UNIT (ROM) with CONSULT-II is detected when TCM memory (RAM) or (ROM).

Possible Cause

NHAT0269

TCM

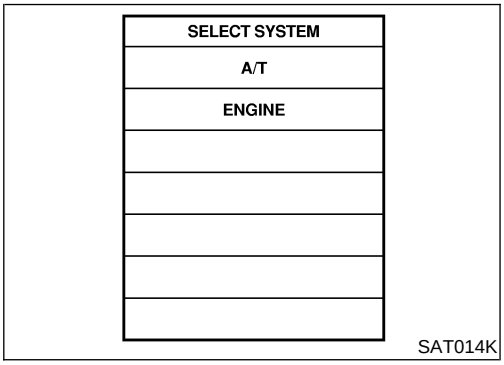

SAT014K

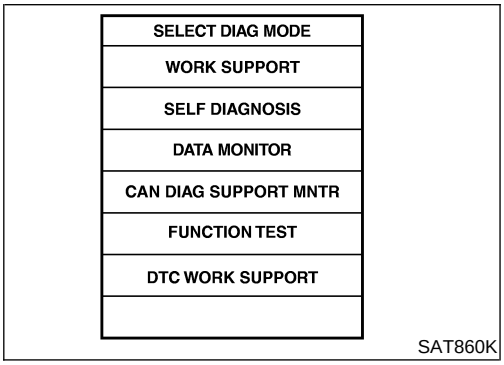

SAT860K

Diagnostic Trouble Code (DTC) Confirmation Procedure

NHAT0259

NOTE:
If "DTC Confirmation Procedure" has been previously conducted, always turn ignition switch OFF and wait at least 10 seconds before conducting the next test.

WITH CONSULT-II

NHAT0259S01

1) Turn ignition switch ON and select "DATA MONITOR" mode for A/T with CONSULT-II.
2) Start engine.
3) Run engine for at least 2 seconds at idle speed.

Diagnostic Procedure

NHAT0086

1	INSPECTION START	
With CONSULT-II 1. Turn ignition switch ON and select “SELF DIAGNOSIS” mode for A/T with CONSULT-II. 2. Touch “ERASE”. 3. Perform “Diagnostic Trouble Code (DTC) Confirmation Procedure”, AT-216. 4. Is the “CONTROL UNIT (RAM)” or “CONTROL UNIT (ROM)” displayed again?		
Yes or No		
Yes	▶	Replace TCM.
No	▶	**INSPECTION END**

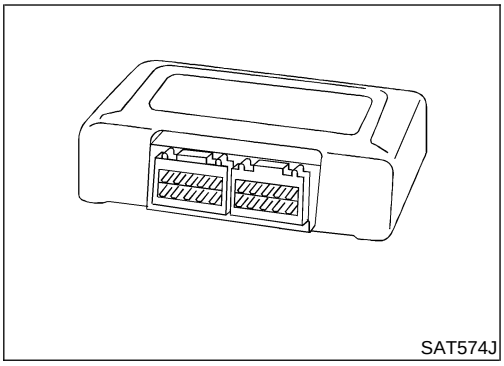
SAT574J

Description

NHAT0199

The TCM consists of a microcomputer and connectors for signal input and output and for power supply. The unit controls the A/T.

On Board Diagnosis Logic

NHAT0260

Diagnostic trouble code CONTROL UNIT (EEP ROM) with CONSULT-II is detected when TCM memory (EEP ROM) is malfunctioning.

Possible Cause

NHAT0270

TCM

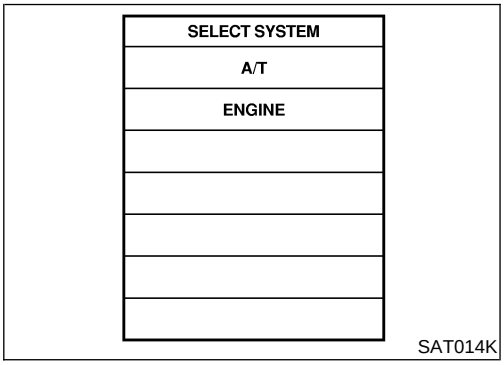

SAT014K

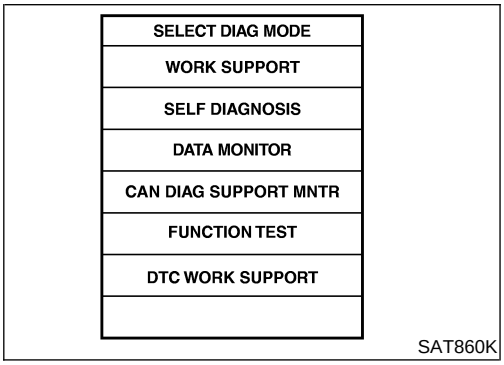

SAT860K

Diagnostic Trouble Code (DTC) Confirmation Procedure

NHAT0261

NOTE:
If "DTC Confirmation Procedure" has been previously conducted, always turn ignition switch "OFF" and wait at least 10 seconds before conducting the next test.

WITH CONSULT-II

NHAT0261S01

1) Turn ignition switch "ON" and select "DATA MONITOR" mode for A/T with CONSULT-II.
2) Start engine.
3) Run engine for at least 2 seconds at idle speed.

Diagnostic Procedure

=NHAT0200

1	CHECK DTC	
With CONSULT-II 1. Turn ignition switch “ON” and select “SELF DIAGNOSIS” mode for A/T with CONSULT-II. 2. Move selector lever to “R” position. 3. Depress accelerator pedal (Full throttle position). 4. Touch “ERASE”. 5. Turn ignition switch to “OFF” position for 10 seconds. 6. Perform “Diagnostic Trouble Code (DTC) Confirmation Procedure”, AT-218. **Is the “CONT UNIT (EEP ROM)” displayed again?**		
Yes	▶	Replace TCM.
No	▶	**INSPECTION END**

Wiring Diagram — AT — NONDTC

NHAT0087

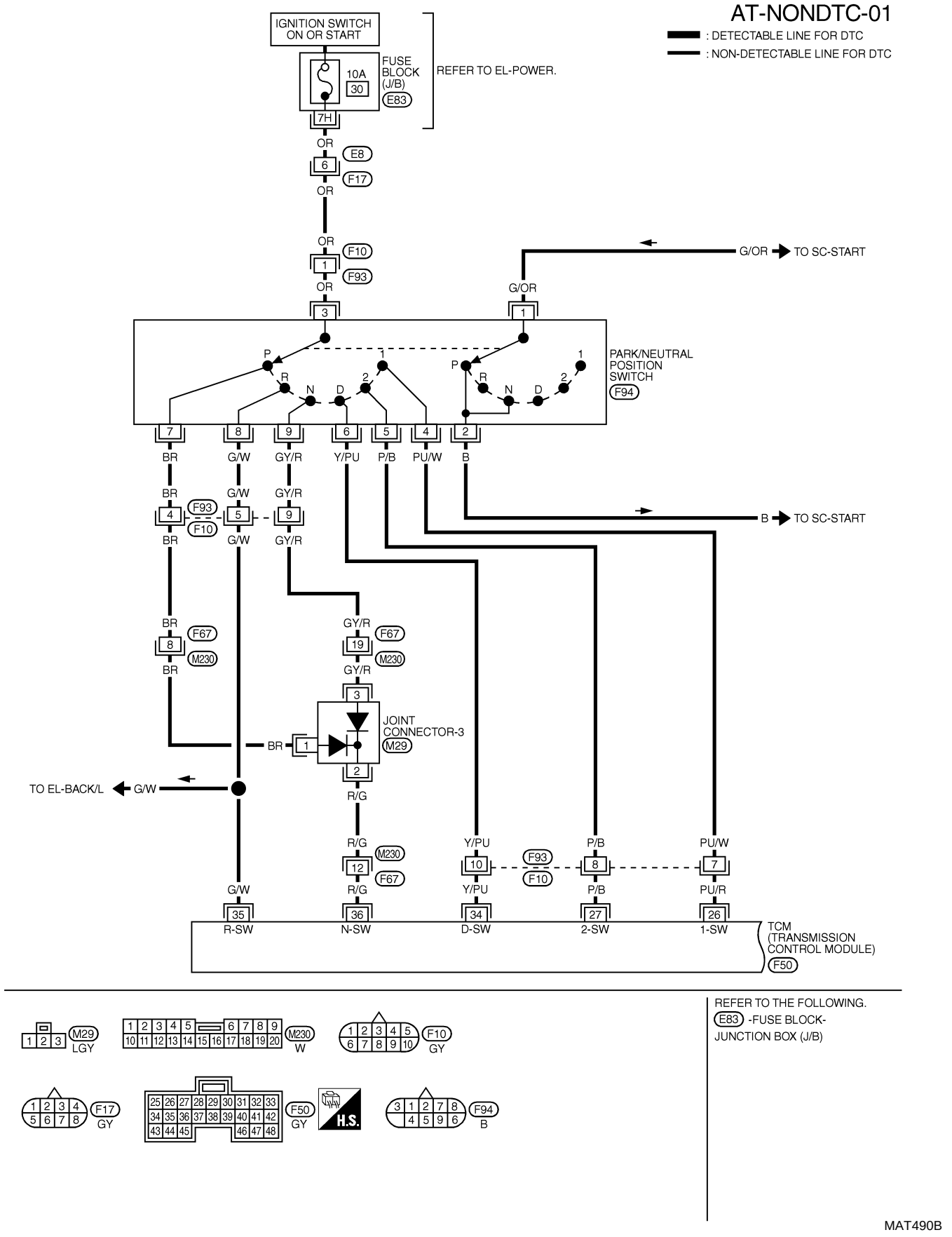

AT-NONDTC-02

: DETECTABLE LINE FOR DTC
: NON-DETECTABLE LINE FOR DTC

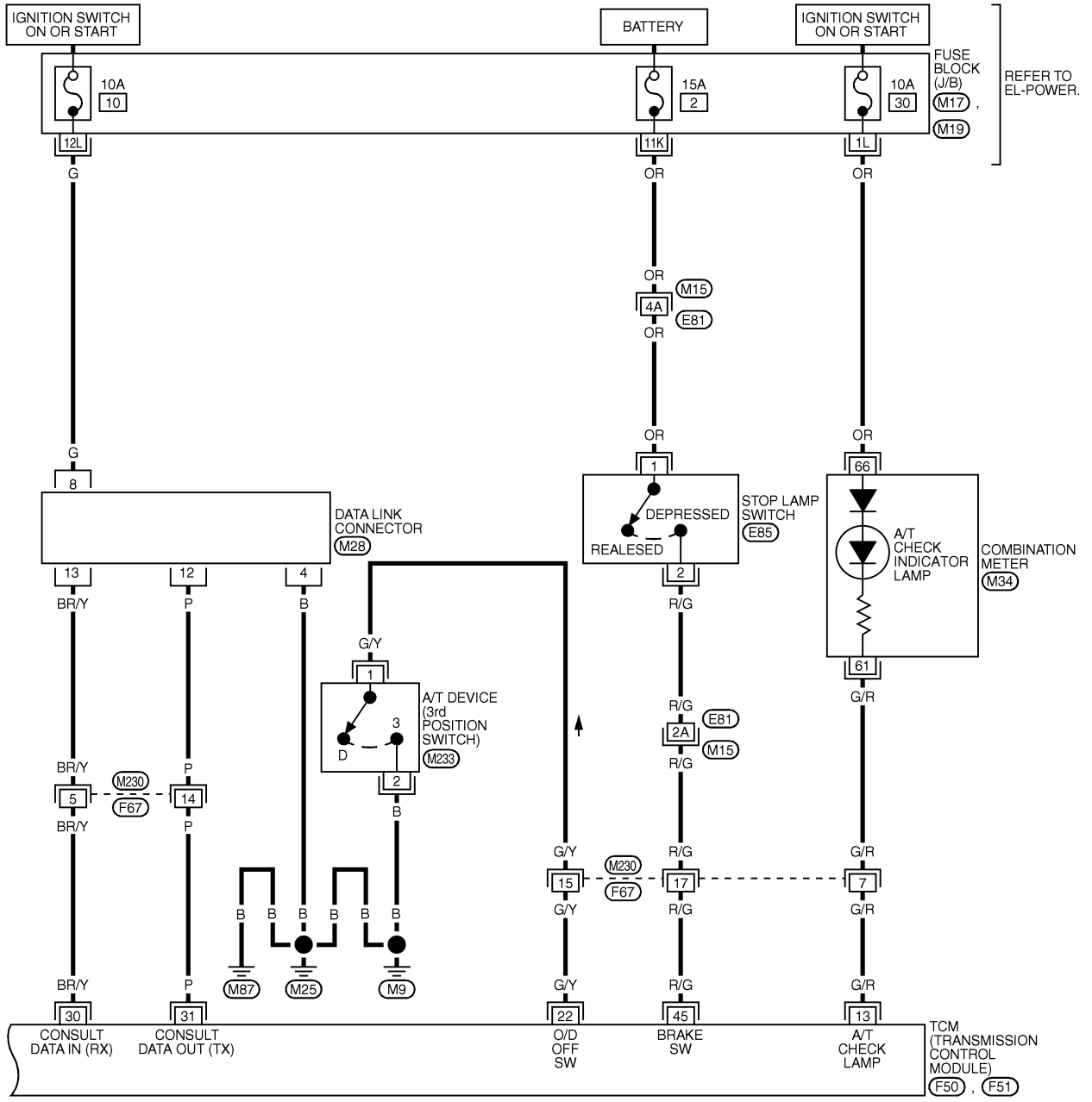

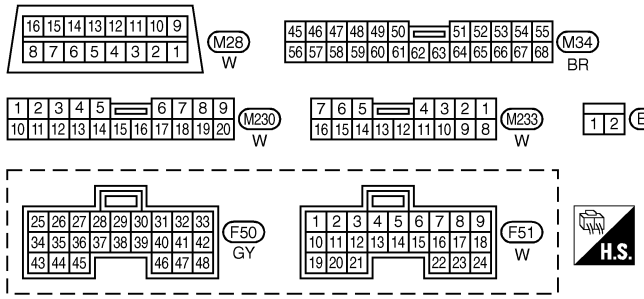

REFER TO THE FOLLOWING.
M15 - SUPER MULTIPLE JUNCTION (SMJ)
M17 , M19 - FUSE BLOCK - JUNCTION BOX (J/B)

MAT491B

A/T CHECK Indicator Lamp Does Not Come On

NHAT0088

SYMPTOM:
A/T CHECK indicator lamp does not come on for about 2 seconds when turning ignition switch to ON.

1	CHECK TCM POWER SOURCE

1. Turn ignition switch to ON position.
   (Do not start engine.)
2. Check voltage between TCM harness connectors F50, F51 terminals 10 (R/Y), 19 (R/Y), 28 (Y/R) and ground. Refer to AT-101, “Wiring Diagram —AT— MAIN”.

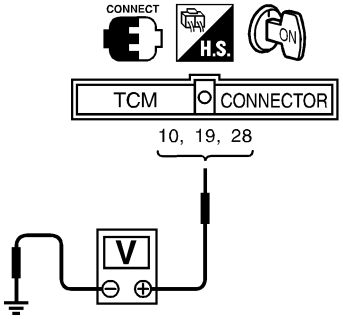

Voltage:
Battery voltage

SAT611J

OK or NG

OK	▶	GO TO 2.
NG	▶	GO TO 3.

2	CHECK POWER SOURCE STEP 2

1. Turn ignition switch to OFF position.
2. Check voltage between TCM harness connector F50 terminal 28 (Y/R) and ground. Refer to AT-101, “Wiring Diagram —AT— MAIN”.

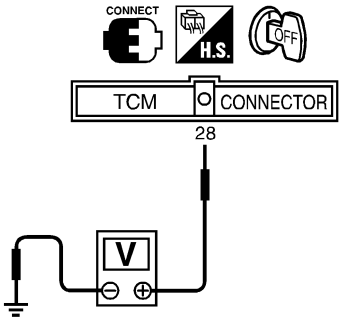

Voltage:
Battery voltage

SAT612JG

OK or NG

OK	▶	GO TO 4.
NG	▶	GO TO 3.

3	DETECT MALFUNCTIONING ITEM

Check the following items:
- Harness for short or open between battery, ignition switch and TCM
  Refer to AT-101, “Wiring Diagram — AT — MAIN”.
- Ignition switch and fuse
  Refer to EL-11, “POWER SUPPLY ROUTING”.

OK or NG

OK	▶	GO TO 4.
NG	▶	Repair or replace damaged parts.

4	CHECK TCM GROUND CIRCUIT

1. Turn ignition switch to OFF position.
2. Disconnect TCM harness connector.
3. Check continuity between TCM harness connector F50 terminals 25 (B), 48 (B) and ground. Refer to AT-101, "Wiring Diagram — AT — MAIN".

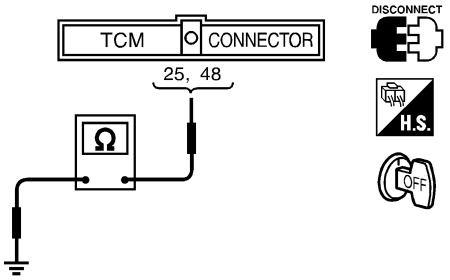

SAT515J

Continuity should exist.

If OK, check harness for short to ground and short to power.

OK or NG

OK	▶	GO TO 5.
NG	▶	Repair open circuit or short to ground or short to power in harness or connectors. Refer to "Wiring Diagram — AT — MAIN" in AT-101.

5	DETECT MALFUNCTIONING ITEM

Check the following items:
- A/T CHECK indicator lamp
- Harness and fuse for short or open between ignition switch and combination meter
  Refer to EL-11, "POWER SUPPLY ROUTING".
- Harness for short or open between combination meter and TCM

OK or NG

OK	▶	GO TO 6.
NG	▶	Repair or replace damaged parts.

6	CHECK SYMPTOM

Check again.

OK or NG

OK	▶	**INSPECTION END**
NG	▶	GO TO 7.

7	CHECK TCM INSPECTION

1. Perform TCM input/output signal inspection.
2. If NG, recheck TCM pin terminals for damage or loose connection with harness connector.

OK or NG

OK	▶	**INSPECTION END**
NG	▶	Repair or replace damaged parts.

Engine Cannot Be Started In P and N Position

=NHAT0089

SYMPTOM:

- **Engine cannot be started with selector lever in P or N position.**
- **Engine can be started with selector lever in D, 2, 1 or R position.**

1	CHECK PARK/NEUTRAL POSITION (PNP) SWITCH CIRCUIT

With CONSULT-II
Does “TCM INPUT SIGNALS” in “DATA MONITOR” show damage to park/neutral position (PNP) switch circuit?

Without CONSULT-II
Does self-diagnosis show damage to park/neutral position (PNP) switch circuit?

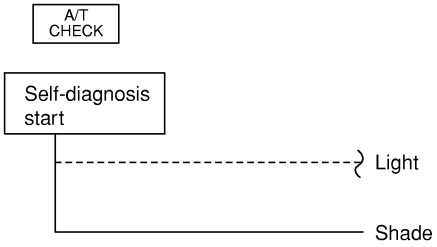

SAT555K

Yes or No

Yes	▶	Check park/neutral position (PNP) switch circuit. Refer to “DTC P0705”, AT-108.
No	▶	GO TO 2.

2	CHECK PARK/NEUTRAL POSITION (PNP) SWITCH

Check for short or open of park/neutral position (PNP) switch harness connector F94 terminals 1 (G/OR) and 2 (B). Refer to AT-110.

OK or NG

OK	▶	GO TO 3.
NG	▶	Repair or replace park/neutral position (PNP) switch.

3	ADJUST CONTROL CABLE

Check control cable. Refer to AT-284.

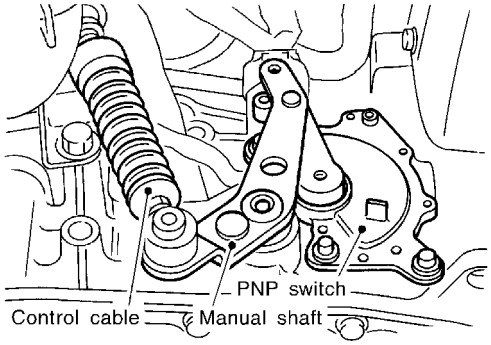

SAT023JA

OK or NG

OK	▶	GO TO 4.
NG	▶	Adjust control cable. Refer to AT-284.

4	CHECK STARTING SYSTEM	
Check starting system. Refer to SC-10, "System Description".		
OK or NG		
OK	▶	**INSPECTION END**
NG	▶	Repair or replace damaged parts.

In P Position, Vehicle Moves Forward or Backward When Pushed

=NHAT0090

SYMPTOM:
Vehicle moves when it is pushed forward or backward with selector lever in P position.

1	ADJUST CONTROL CABLE	
Check control cable. Refer to AT-284.		
OK or NG		
OK	▶	GO TO 2.
NG	▶	Adjust control cable. Refer to AT-284.

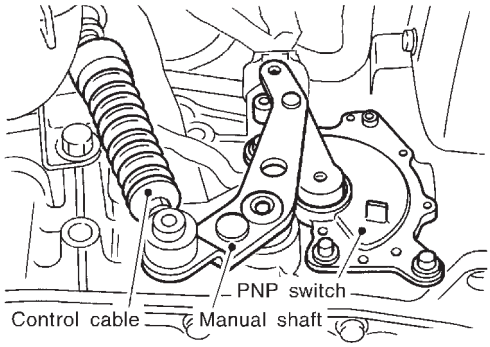

SAT023JA

2	CHECK PARKING COMPONENTS	
Check parking components. Refer to AT-288, 362, “Overhaul” and “Assembly”.		
OK or NG		
OK	▶	**INSPECTION END**
NG	▶	Repair or replace damaged parts.

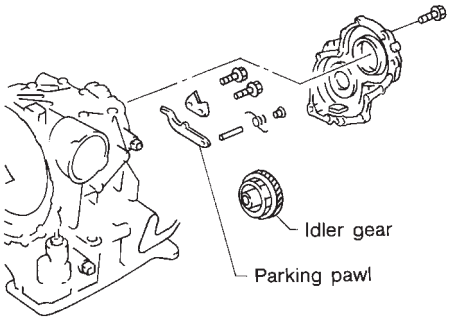

SAT282F

In N Position, Vehicle Moves

=NHAT0091

SYMPTOM:
Vehicle moves forward or backward when selecting N position.

1	ADJUST CONTROL CABLE	
Check control cable. Refer to AT-284.		

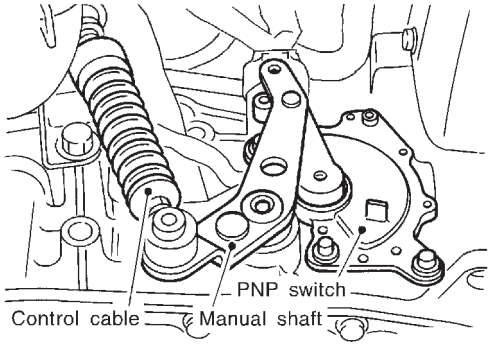

SAT023JA

OK or NG

OK	▶	GO TO 2.
NG	▶	Adjust control cable. Refer to AT-284.

2	CHECK A/T FLUID LEVEL	
Check A/T fluid level again.		

SAT638A

OK or NG

OK	▶	GO TO 3.
NG	▶	Refill ATF.

3	CHECK A/T FLUID CONDITION

1. Remove oil pan.
2. Check A/T fluid condition.

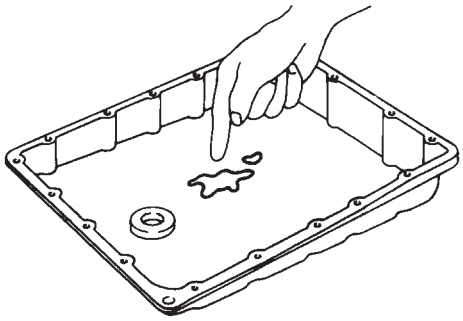

SAT171B

OK or NG

OK	▶	GO TO 5.
NG	▶	GO TO 4.

4	DETECT MALFUNCTIONING ITEM

1. Disassemble A/T. Refer to AT-293.
2. Check the following items:
- Forward clutch assembly
- Overrun clutch assembly
- Reverse clutch assembly

OK or NG

OK	▶	GO TO 5.
NG	▶	Repair or replace damaged parts.

5	CHECK SYMPTOM

Check again.

OK or NG

OK	▶	**INSPECTION END**
NG	▶	GO TO 6.

6	CHECK TCM INSPECTION

1. Perform TCM input/output signal inspection.
2. If NG, recheck TCM pin terminals for damage or loose connection with harness connector.

OK or NG

OK	▶	**INSPECTION END**
NG	▶	Repair or replace damaged parts.

Large Shock. N → R Position

=NHAT0092

SYMPTOM:
There is large shock when changing from N to R position.

1	CHECK SELF-DIAGNOSTIC RESULTS	
Does self-diagnosis show damage to A/T fluid temperature sensor, line pressure solenoid valve or accelerator pedal position sensor (throttle position sensor) circuit?		
Yes or No		
Yes	▶	GO TO 2.
No	▶	GO TO 3.

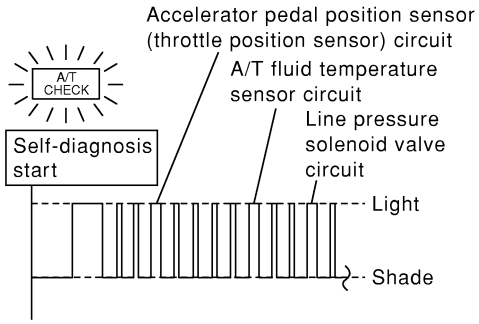

SAT582KA

2	CHECK DAMAGED CIRCUIT	
Check damaged circuit.		
	▶	Refer to “DTC P0710, P0745 or P1705”, AT-114, 172 or 188.

3	CHECK LINE PRESSURE	
Check line pressure at idle with selector lever in D position. Refer to AT-68, “LINE PRESSURE TEST”.		
OK or NG		
OK	▶	GO TO 5.
NG	▶	GO TO 4.

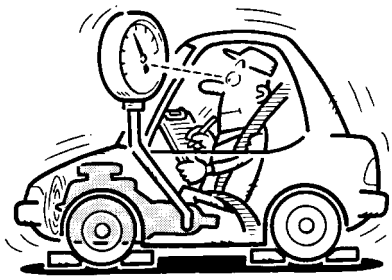

SAT494G

4	DETECT MALFUNCTIONING ITEM	
1. Remove control valve assembly. Refer to AT-282. 2. Check the following items: ● Valves to control line pressure (Pressure regulator valve, pressure modifier valve, pilot valve and pilot filter) ● Line pressure solenoid valve ● Oil pump assembly		
OK or NG		
OK	▶	GO TO 5.
NG	▶	Repair or replace damaged parts.

5	CHECK SYMPTOM	
Check again.		
	OK or NG	
OK	▶	**INSPECTION END**
NG	▶	GO TO 6.

6	CHECK TCM INSPECTION	
1. Perform TCM input/output signal inspection. 2. If NG, recheck TCM pin terminals for damage or loose connection with harness connector.		
	OK or NG	
OK	▶	**INSPECTION END**
NG	▶	Repair or replace damaged parts.

Vehicle Does Not Creep Backward In R Position

=NHAT0093

SYMPTOM:
Vehicle does not creep backward when selecting R position.

1	CHECK A/T FLUID LEVEL

Check A/T fluid level again.

SAT638A

OK or NG

OK	▶	GO TO 2.
NG	▶	Refill ATF.

2	CHECK LINE PRESSURE

Check line pressure at idle with selector lever in R position. Refer to AT-68, “LINE PRESSURE TEST”.

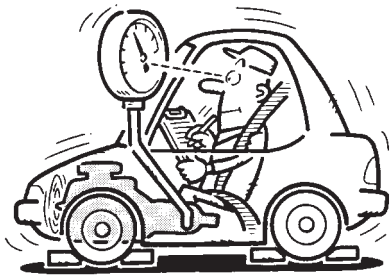

SAT494G

OK or NG

OK	▶	GO TO 4.
NG	▶	GO TO 3.

3	DETECT MALFUNCTIONING ITEM

1. Remove control valve assembly. Refer to AT-282, “ON-VEHICLE SERVICE”.
2. Check the following items:
- Valves to control line pressure (Pressure regulator valve, pressure modifier valve, pilot valve and pilot filter)
- Line pressure solenoid valve
3. Disassemble A/T. Refer to AT-293.
4. Check the following item:
- Oil pump assembly

OK or NG

OK	▶	GO TO 4.
NG	▶	Repair or replace damaged parts.

4	CHECK STALL REVOLUTION

Check stall revolution with selector lever in 1st and R positions.

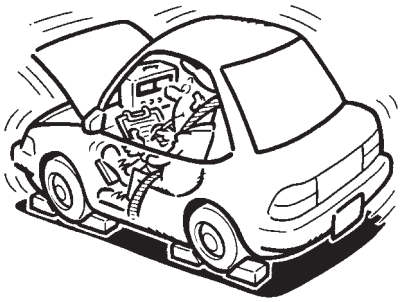

SAT493G

OK or NG

OK (Refer to "Stall test", AT-64.)	▶	GO TO 7.
OK in 1st position, NG in R position	▶	GO TO 5.
NG in both 1st and R positions	▶	GO TO 6.

5	DETECT MALFUNCTIONING ITEM

1. Disassemble A/T. Refer to AT-293.
2. Check the following item:
- Reverse clutch assembly

OK or NG

OK	▶	GO TO 7.
NG	▶	Repair or replace damaged parts.

6	DETECT MALFUNCTIONING ITEM

1. Disassemble A/T. Refer to AT-293.
2. Check the following items:
- Reverse clutch assembly
- High clutch assembly
- Low & reverse brake assembly
- Forward clutch assembly
- Overrun clutch assembly

OK or NG

OK	▶	GO TO 7.
NG	▶	Repair or replace damaged parts.

7	CHECK A/T FLUID CONDITION

1. Remove oil pan.
2. Check A/T fluid condition.

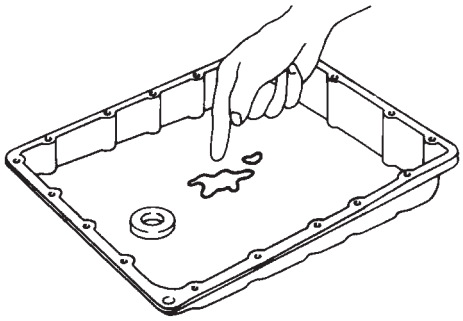

SAT171B

OK or NG

OK	▶	GO TO 9.
NG	▶	GO TO 8.

8	DETECT MALFUNCTIONING ITEM

1. Disassemble A/T. Refer to AT-293.
2. Check the following items:
- Reverse clutch assembly
- High clutch assembly
- Low & reverse brake assembly
- Forward clutch assembly
- Overrun clutch assembly

OK or NG

OK	▶	GO TO 9.
NG	▶	Repair or replace damaged parts.

9	CHECK SYMPTOM

Check again.

OK or NG

OK	▶	**INSPECTION END**
NG	▶	GO TO 10.

10	CHECK TCM INSPECTION

1. Perform TCM input/output signal inspection.
2. If NG, recheck TCM pin terminals for damage or loose connection with harness connector.

OK or NG

OK	▶	**INSPECTION END**
NG	▶	Repair or replace damaged parts.

Vehicle Does Not Creep Forward in D, 2nd or 1st Position

=NHAT0094

SYMPTOM:
Vehicle does not creep forward when selecting D, 2nd or 1st position.

1	CHECK A/T FLUID LEVEL

Check A/T fluid level again.

SAT638A

OK or NG

OK	▶	GO TO 2.
NG	▶	Refill ATF.

2	CHECK LINE PRESSURE

Check line pressure at idle with selector lever in D position. Refer to AT-68, “LINE PRESSURE TEST”.

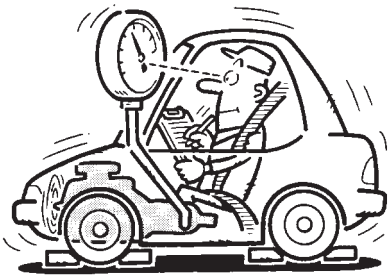

SAT494G

OK or NG

OK	▶	GO TO 4.
NG	▶	GO TO 3.

3	DETECT MALFUNCTIONING ITEM

1. Remove control valve assembly. Refer to AT-282.
2. Check the following items:
- Valves to control line pressure (Pressure regulator valve, pressure modifier valve, pilot valve and pilot filter)
- Line pressure solenoid valve
3. Disassemble A/T. Refer to AT-293.
4. Check the following item:
- Oil pump assembly

OK or NG

OK	▶	GO TO 4.
NG	▶	Repair or replace damaged parts.

4	CHECK STALL REVOLUTION

Check stall revolution with selector lever in D position. Refer to AT-64, "STALL TEST".

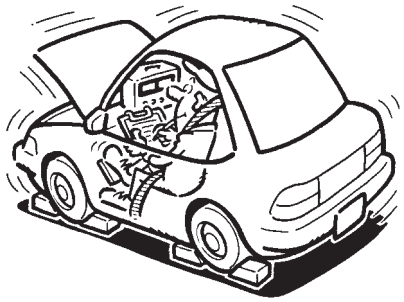

SAT493G

OK or NG

OK	▶	GO TO 6.
NG	▶	GO TO 5.

5	DETECT MALFUNCTIONING ITEM

1. Disassemble A/T. Refer to AT-293.
2. Check the following items:
- Forward clutch assembly
- Forward one-way clutch
- Low one-way clutch
- Reverse clutch assembly
- High clutch assembly

OK or NG

OK	▶	GO TO 6.
NG	▶	Repair or replace damaged parts.

6	CHECK A/T FLUID CONDITION

1. Remove oil pan.
2. Check A/T fluid condition.

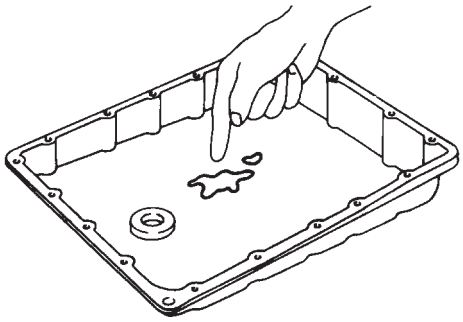

SAT171B

OK or NG

OK	▶	GO TO 8.
NG	▶	GO TO 7.

7	DETECT MALFUNCTIONING ITEM	
1. Disassemble A/T. Refer to AT-293. 2. Check the following items: ● Forward clutch assembly ● Forward one-way clutch ● Low one-way clutch ● Reverse clutch assembly ● High clutch assembly		
OK or NG		
OK	▶	GO TO 8.
NG	▶	Repair or replace damaged parts.

8	CHECK SYMPTOM	
Check again.		
OK or NG		
OK	▶	**INSPECTION END**
NG	▶	GO TO 9.

9	CHECK TCM INSPECTION	
1. Perform TCM input/output signal inspection. 2. If NG, recheck TCM pin terminals for damage or loose connection with harness connector.		
OK or NG		
OK	▶	**INSPECTION END**
NG	▶	Repair or replace damaged parts.

Vehicle Cannot Be Started From D_1

=NHAT0095

SYMPTOM:
Vehicle cannot be started from D_1 on Cruise test — Part 1.

1	CHECK SYMPTOM	
Is “Vehicle Does Not Creep Backward In R Position” OK?		
Yes or No		
Yes	▶	GO TO 2.
No	▶	Go to “Vehicle Does Not Creep Backward In R Position”, AT-231.

2	CHECK SELF-DIAGNOSTIC RESULTS	
Does self-diagnosis show damage to vehicle speed sensor·A/T (revolution sensor), overrun clutch solenoid valve, torque converter clutch solenoid valve, shift solenoid valve A, B or vehicle speed sensor·MTR after cruise test?		

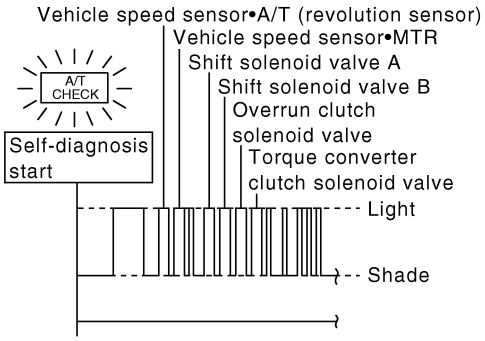

SAT733K

Yes or No		
Yes	▶	Check damaged circuit. Refer to “DTC P0720, P0740, P0750, P0755, P1760 or VHCL SPEED SEN·MTR”, AT-120, 157, 178, 183, 194 or 206.
No	▶	GO TO 3.

3	CHECK ACCELERATOR PEDAL POSITION SENSOR	
Check accelerator pedal position sensor. Refer to AT-188, “DTC P1705”.		

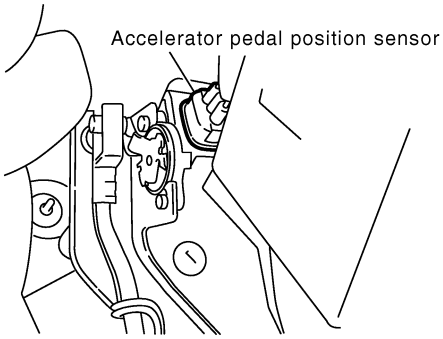

SAT516KB

OK or NG		
OK	▶	GO TO 4.
NG	▶	Repair or replace accelerator pedal position sensor.

4	CHECK LINE PRESSURE

Check line pressure at stall point with selector lever in D position. Refer to "LINE PRESSURE TEST", AT-68.

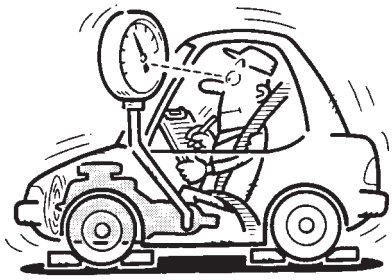

SAT494G

OK or NG

OK	▶	GO TO 6.
NG	▶	GO TO 5.

5	DETECT MALFUNCTIONING ITEM

1. Remove control valve assembly. Refer to AT-282.
2. Check the following items:
- Shift valve A
- Shift valve B
- Shift solenoid valve A
- Shift solenoid valve B
- Pilot valve
- Pilot filter
3. Disassemble A/T. Refer to AT-293.
4. Check the following items:
- High clutch assembly
- Torque converter
- Oil pump assembly
- Reverse clutch assembly
- Low & reverse brake assembly

OK or NG

OK	▶	GO TO 8.
NG	▶	Repair or replace damaged parts.

6	CHECK A/T FLUID CONDITION

1. Remove oil pan.
2. Check A/T fluid condition.

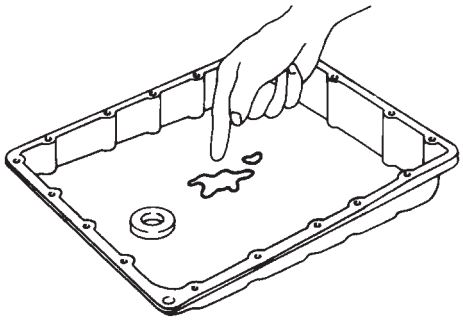

SAT171B

OK or NG

OK	▶	GO TO 7.
NG	▶	GO TO 5.

7	DETECT MALFUNCTIONING ITEM

1. Remove control valve assembly. Refer to AT-282.
2. Check the following items:
- Shift valve A
- Shift valve B
- Shift solenoid valve A
- Shift solenoid valve B
- Pilot valve
- Pilot filter

OK or NG

OK	▶	GO TO 8.
NG	▶	Repair or replace damage parts.

8	CHECK SYMPTOM

Check again.

OK or NG

OK	▶	**INSPECTION END**
NG	▶	GO TO 9.

9	CHECK TCM INSPECTION

1. Perform TCM input/output signal inspection.
2. If NG, recheck TCM pin terminals for damage or loose connection with harness connector.

OK or NG

OK	▶	**INSPECTION END**
NG	▶	Repair or replace damaged parts.

A/T Does Not Shift: $D_1 \rightarrow D_2$ or Does Not Kickdown: $D_4 \rightarrow D_2$

=NHAT0096

SYMPTOM:
A/T does not shift from D_1 to D_2 at the specified speed.
A/T does not shift from D_4 to D_2 when depressing accelerator pedal fully at the specified speed.

1	CHECK SYMPTOM	
Are “Vehicle Does Not Creep Forward In D, 2nd or 1st Position” and “Vehicle Cannot Be Started From D_1” OK?		
Yes or No		
Yes	▶	GO TO 2.
No	▶	Go to “Vehicle Does Not Creep Forward In D, 2nd or 1st Position” and “Vehicle Cannot Be Started From D_1”, AT-234, AT-237.

2	ADJUST CONTROL CABLE	
Check control cable. Refer to AT-284.		
OK or NG		
OK	▶	GO TO 3.
NG	▶	Adjust control cable. Refer to AT-284.

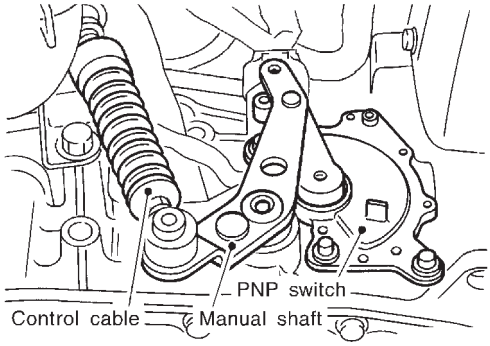

SAT023JA

3	CHECK VEHICLE SPEED SENSOR·A/T AND VEHICLE SPEED SENSOR·MTR CIRCUIT	
Check vehicle speed sensor·A/T (revolution sensor) and vehicle speed sensor·MTR circuit. Refer to “DTC P0720 and VHCL SPEED SEN·MTR”, AT-120 and AT-206.		
OK or NG		
OK	▶	GO TO 4.
NG	▶	Repair or replace vehicle speed sensor·A/T (revolution sensor) and vehicle speed sensor·MTR circuits.

4	CHECK ACCELERATOR PEDAL POSITION SENSOR

Check accelerator pedal position sensor. Refer to AT-188, "DTC P1705".

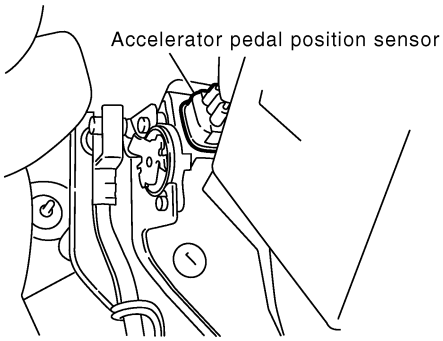

SAT516KB

OK or NG

OK	▶	GO TO 5.
NG	▶	Repair or replace accelerator pedal position sensor.

5	CHECK A/T FLUID CONDITION

1. Remove oil pan.
2. Check A/T fluid condition.

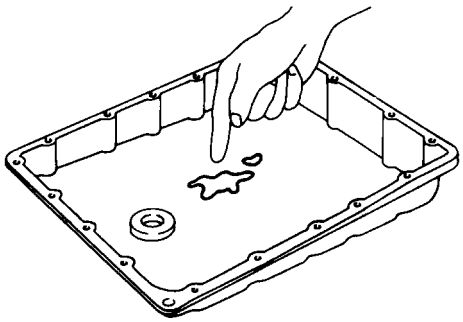

SAT171B

OK or NG

OK	▶	GO TO 7.
NG	▶	GO TO 6.

6	DETECT MALFUNCTIONING ITEM

1. Remove control valve. Refer to AT-282.
2. Check the following items:
- Shift valve A
- Shift valve B
- Shift solenoid valve A
- Shift solenoid valve B
- Pilot valve
- Pilot filter
3. Disassemble A/T. Refer to AT-293.
4. Check the following items:
- Servo piston assembly
- Brake band

OK or NG

OK	▶	GO TO 8.
NG	▶	Repair or replace damaged parts.

7	DETECT MALFUNCTIONING ITEM	
1. Remove control valve. Refer to AT-282. 2. Check the following items: ● Shift valve A ● Shift valve B ● Shift solenoid valve A ● Shift solenoid valve B ● Pilot valve ● Pilot filter		
	OK or NG	
OK	▶	GO TO 8.
NG	▶	Repair or replace damaged parts.

8	CHECK SYMPTOM	
Check again.		
	OK or NG	
OK	▶	**INSPECTION END**
NG	▶	GO TO 9.

9	CHECK TCM INSPECTION	
1. Perform TCM input/output signal inspection. 2. If NG, recheck TCM pin terminals for damage or loose connection with harness connector.		
	OK or NG	
OK	▶	**INSPECTION END**
NG	▶	Repair or replace damaged parts.

A/T Does Not Shift: $D_2 \rightarrow D_3$

=NHAT0097

SYMPTOM:
A/T does not shift from D_2 to D_3 at the specified speed.

1	CHECK SYMPTOM	
Are “Vehicle Does Not Creep Forward In D, 2nd or 1st Position” and “Vehicle Cannot Be Started From D_1” OK?		
Yes or No		
Yes	▶	GO TO 2.
No	▶	Go to “Vehicle Does Not Creep Forward In D, 2nd or 1st Position” and “Vehicle Cannot Be Started From D_1”, AT-234, AT-237.

2	ADJUST CONTROL CABLE	
Check control cable. Refer to AT-284.		

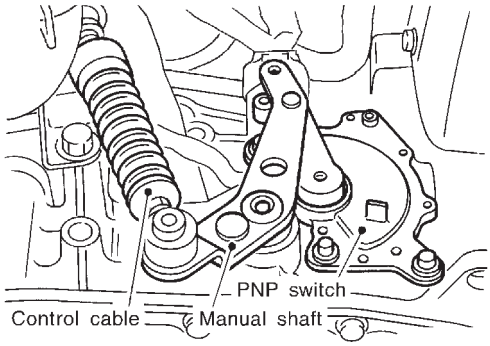

SAT023JA

OK or NG		
OK	▶	GO TO 3.
NG	▶	Adjust control cable. Refer to AT-284.

3	CHECK VEHICLE SPEED SENSOR·A/T AND VEHICLE SPEED SENSOR·MTR CIRCUIT	
Check vehicle speed sensor·A/T (revolution sensor) and vehicle speed sensor·MTR circuit. Refer to “DTC P0720 and VHCL SPEED SEN·MTR”, AT-120 and AT-206.		
OK or NG		
OK	▶	GO TO 4.
NG	▶	Repair or replace vehicle speed sensor·A/T (revolution sensor) and vehicle speed sensor·MTR circuits.

4	CHECK ACCELERATOR PEDAL POSITION SENSOR

Check accelerator pedal position sensor. Refer to AT-188, "DTC P1705".

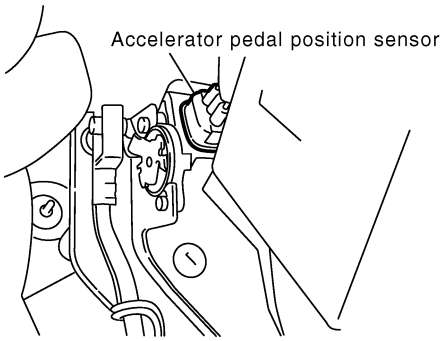

SAT516KB

OK or NG

OK	▶	GO TO 5.
NG	▶	Repair or replace accelerator pedal position sensor.

5	CHECK A/T FLUID CONDITION

1. Remove oil pan.
2. Check A/T fluid condition.

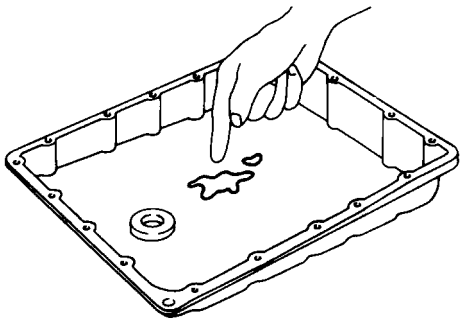

SAT171B

OK or NG

OK	▶	GO TO 7.
NG	▶	GO TO 6.

6	DETECT MALFUNCTIONING ITEM

1. Remove control valve assembly. Refer to AT-282.
2. Check the following items:
- Shift valve B
- Shift solenoid valve B
- Pilot valve
- Pilot filter
3. Disassemble A/T. Refer to AT-293.
4. Check the following items:
- Servo piston assembly
- High clutch assembly
- Brake band

OK or NG

OK	▶	GO TO 8.
NG	▶	Repair or replace damaged parts.

7	DETECT MALFUNCTIONING ITEM	
1. Remove control valve assembly. Refer to AT-282. 2. Check the following items: ● Shift valve B ● Shift solenoid valve B ● Pilot valve ● Pilot filter		
OK or NG		
OK	▶	GO TO 8.
NG	▶	Repair or replace damaged parts.

8	CHECK SYMPTOM	
Check again.		
OK or NG		
OK	▶	**INSPECTION END**
NG	▶	GO TO 9.

9	CHECK TCM INSPECTION	
1. Perform TCM input/output signal inspection. 2. If NG, recheck TCM pin terminals for damage or loose connection with harness connector.		
OK or NG		
OK	▶	**INSPECTION END**
NG	▶	Repair or replace damaged parts.

A/T Does Not Shift: $D_3 \rightarrow D_4$

=NHAT0098

SYMPTOM:

- **A/T does not shift from D_3 to D_4 at the specified speed.**
- **A/T must be warm before D_3 to D_4 shift will occur.**

1	CHECK SYMPTOM	
Are “Vehicle Does Not Creep Forward In D, 2nd or 1st Position” and “Vehicle Cannot Be Started From D_1” OK?		
Yes or No		
Yes	▶	GO TO 2.
No	▶	Go to “Vehicle Does Not Creep Forward In D, 2nd or 1st Position” and “Vehicle Cannot Be Started From D_1”, AT-234, AT-237.

2	CHECK SELF-DIAGNOSTIC RESULTS	
With CONSULT-II Does self-diagnosis, after cruise test, show damage to any of the following circuits? ● Park/neutral position (PNP) switch ● 3rd position switch ● A/T fluid temperature sensor ● Vehicle speed sensor·A/T (revolution sensor) ● Shift solenoid valve A or B ● Vehicle speed sensor·MTR		
Yes or No		
Yes	▶	Check damaged circuit. Refer to “DTC P0705, P0710, P0720, P0750, P0755 or VHCL SPEED SEN·MTR”, AT-108, AT-114, AT-120, AT-178, AT-183 or AT-206.
No	▶	GO TO 3.

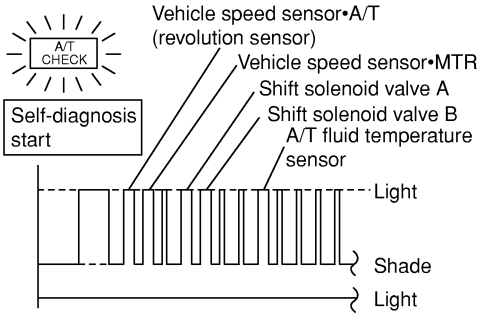

SAT586K

3	CHECK ACCELERATOR PEDAL POSITION SENSOR	
Check accelerator pedal position sensor. Refer to AT-188, “DTC P1705”.		
OK or NG		
OK	▶	GO TO 4.
NG	▶	Repair or replace accelerator pedal position sensor.

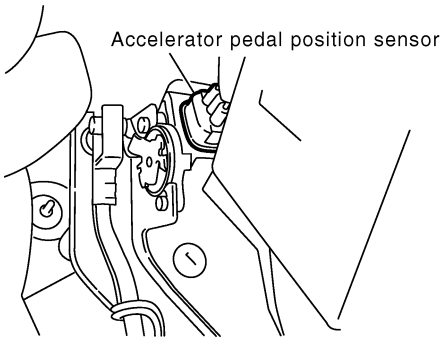

SAT516KB

4	CHECK A/T FLUID CONDITION

1. Remove oil pan.
2. Check A/T fluid condition.

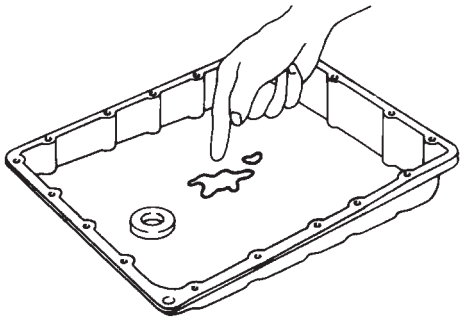

SAT171B

OK or NG

OK	▶	GO TO 6.
NG	▶	GO TO 5.

5	DETECT MALFUNCTIONING ITEM

1. Remove control valve assembly. Refer to AT-282.
2. Check the following items:
- Shift valve A
- Shift solenoid valve A
- Pilot valve
- Pilot filter
3. Disassemble A/T. Refer to AT-293.
4. Check the following items:
- Servo piston assembly
- Brake band

OK or NG

OK	▶	GO TO 7.
NG	▶	Repair or replace damaged parts.

6	DETECT MALFUNCTIONING ITEM

1. Remove control valve assembly. Refer to AT-282.
2. Check the following items:
- Shift valve A
- Overrun clutch control valve
- Shift solenoid valve A
- Pilot valve
- Pilot filter

OK or NG

OK	▶	GO TO 7.
NG	▶	Repair or replace damaged parts.

7	CHECK SYMPTOM

Check again.

OK or NG

OK	▶	**INSPECTION END**
NG	▶	GO TO 8.

8	CHECK TCM INSPECTION	
1. Perform TCM input/output signal inspection. 2. If NG, recheck TCM pin terminals for damage or loose connection with harness connector.		
OK or NG		
OK	▶	**INSPECTION END**
NG	▶	Repair or replace damaged parts.

A/T Does Not Perform Lock-up

=NHAT0099

SYMPTOM:
A/T does not perform lock-up at the specified speed.

1	CHECK SELF-DIAGNOSTIC RESULTS	
Does self-diagnosis show damage to A/T fluid temperature sensor, vehicle speed sensor·A/T (revolution sensor), engine speed signal, torque converter clutch solenoid valve or vehicle speed·MTR after cruise test?		
Yes or No		
Yes	▶	Check damaged circuit. Refer to “DTC P0710, P0720, P0725, P0740 or VEHICLE SPEED SENSOR·MTR”, AT-114, 120, 125, 157 or 206.
No	▶	GO TO 2.

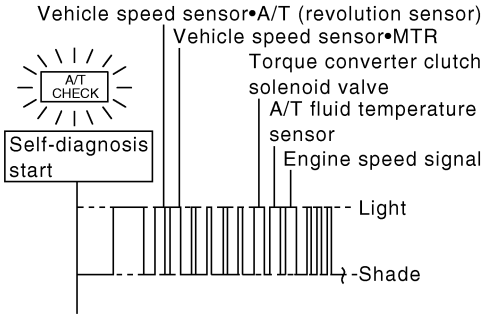

SAT734K

2	CHECK ACCELERATOR PEDAL POSITION SENSOR	
Check accelerator pedal position sensor. Refer to AT-188, “DTC P1705”.		
OK or NG		
OK	▶	GO TO 3.
NG	▶	Repair or replace accelerator pedal position sensor.

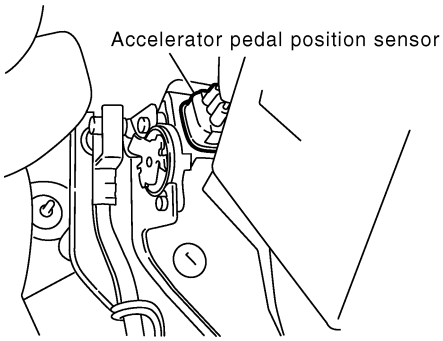

SAT516KB

3	DETECT MALFUNCTIONING ITEM	
1. Remove control valve. Refer to AT-282. 2. Check the following items: ● Torque converter clutch control valve ● Torque converter relief valve ● Pilot valve ● Pilot filter 3. Disassemble A/T. Refer to AT-293. 4. Check the following item: ● Torque converter		
OK or NG		
OK	▶	GO TO 4.
NG	▶	Repair or replace damaged parts.

4	CHECK SYMPTOM	
Check again.		
	OK or NG	
OK	▶	**INSPECTION END**
NG	▶	GO TO 5.

5	CHECK TCM INSPECTION	
1. Perform TCM input/output signal inspection. 2. If NG, recheck TCM pin terminals for damage or loose connection with harness connector.		
	OK or NG	
OK	▶	**INSPECTION END**
NG	▶	Repair or replace damaged parts.

A/T Does Not Hold Lock-up Condition

=NHAT0100

SYMPTOM:
A/T does not hold lock-up condition for more than 30 seconds.

1	CHECK SELF-DIAGNOSTIC RESULTS	
Does self-diagnosis show damage to engine speed signal circuit after cruise test?		

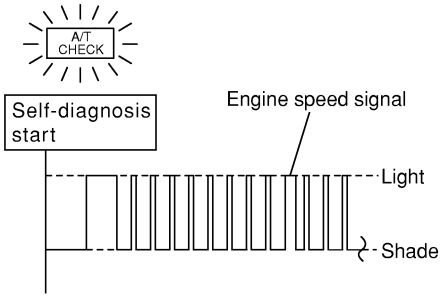

SAT551K

Yes or No

Yes	▶	Check engine speed signal circuit. Refer to “DTC P0725”, AT-125.
No	▶	GO TO 2.

2	CHECK A/T FLUID CONDITION

1. Remove oil pan.
2. Check A/T fluid condition.

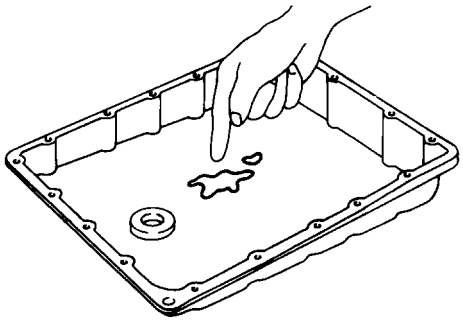

SAT171B

OK or NG

OK	▶	GO TO 4.
NG	▶	GO TO 3.

3	DETECT MALFUNCTIONING ITEM

1. Remove control valve assembly. Refer to AT-282.
2. Check the following items:
- Torque converter clutch control valve
- Pilot valve
- Pilot filter
3. Disassemble A/T. Refer to AT-293.
4. Check torque converter and oil pump assembly.

OK or NG

OK	▶	GO TO 5.
NG	▶	Repair or replace damaged parts.

4	DETECT MALFUNCTIONING ITEM	
1. Remove control valve assembly. Refer to AT-282. 2. Check the following items: ● Torque converter clutch control valve ● Pilot valve ● Pilot filter		
OK or NG		
OK	▶	GO TO 5.
NG	▶	Repair or replace damaged parts.

5	CHECK SYMPTOM	
Check again.		
OK or NG		
OK	▶	**INSPECTION END**
NG	▶	GO TO 6.

6	CHECK TCM INSPECTION	
1. Perform TCM input/output signal inspection. 2. If NG, recheck TCM pin terminals for damage or loose connection with harness connector.		
OK or NG		
OK	▶	**INSPECTION END**
NG	▶	Repair or replace damaged parts.

Lock-up Is Not Released

=NHAT0101

SYMPTOM:
Lock-up is not released when accelerator pedal is released.

1	CHECK ACCELERATOR PEDAL POSITION SENSOR (THROTTLE POSITION SENSOR) CIRCUIT
With CONSULT-II Does “TCM INPUT SIGNALS” in “DATA MONITOR” show damage to accelerator pedal position sensor (throttle position sensor) circuit?	
Without CONSULT-II Does self-diagnosis show damage to accelerator pedal position sensor (throttle position sensor) circuit?	

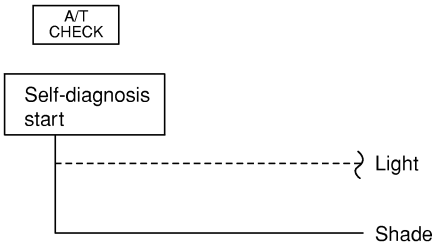

SAT555K

Yes or No

Yes	▶	Check accelerator pedal position sensor (throttle position sensor) circuit. Refer to “DTC P1705”, AT-188.
No	▶	GO TO 2.

2	CHECK SYMPTOM
Check again.	

OK or NG

OK	▶	**INSPECTION END**
NG	▶	GO TO 3.

3	CHECK TCM INSPECTION
1. Perform TCM input/output signal inspection. 2. If NG, recheck TCM pin terminals for damage or loose connection with harness connector.	

OK or NG

OK	▶	**INSPECTION END**
NG	▶	Repair or replace damaged parts.

Engine Speed Does Not Return To Idle (Light Braking $D_4 \rightarrow D_3$)

=NHAT0102

SYMPTOM:

- **Engine speed does not smoothly return to idle when A/T shifts from D_4 to D_3.**
- **Vehicle does not decelerate by engine brake when turning A/T selector lever D to 3rd position.**
- **Vehicle does not decelerate by engine brake when shifting A/T from D to 2nd position.**

1	CHECK SELF-DIAGNOSTIC RESULTS
Does self-diagnosis show damage to overrun clutch solenoid valve circuit after cruise test?	

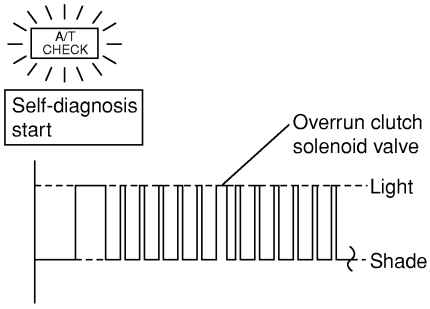

SAT548K

Yes or No

Yes	▶	Check overrun clutch solenoid valve circuit. Refer to “DTC P1760”, AT-195.
No	▶	GO TO 2.

2	CHECK ACCELERATOR PEDAL POSITION SENSOR
Check accelerator pedal position sensor. Refer to AT-188, “DTC P1705”.	

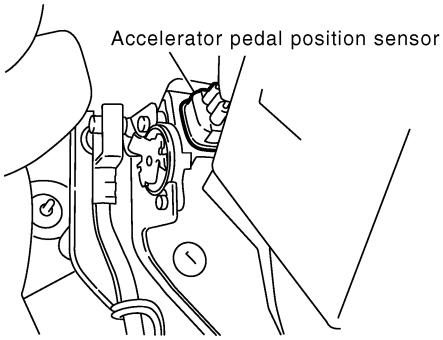

SAT516KB

OK or NG

OK	▶	GO TO 3.
NG	▶	Repair or replace accelerator pedal position sensor.

3	CHECK A/T FLUID CONDITION

1. Remove oil pan.
2. Check A/T fluid condition.

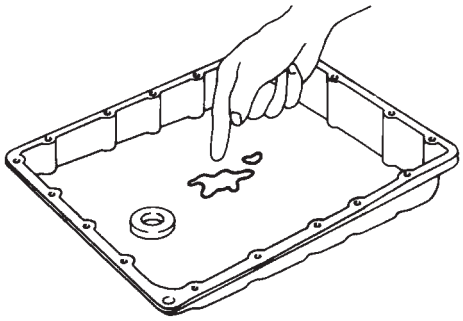

SAT171B

OK or NG

OK	▶	GO TO 5.
NG	▶	GO TO 4.

4	DETECT MALFUNCTIONING ITEM

1. Remove control valve assembly. Refer to AT-282.
2. Check the following items:
- Overrun clutch control valve
- Overrun clutch reducing valve
- Overrun clutch solenoid valve
3. Disassemble A/T. Refer to AT-293.
4. Check the following item:
- Overrun clutch assembly

OK or NG

OK	▶	GO TO 6.
NG	▶	Repair or replace damaged parts.

5	DETECT MALFUNCTIONING ITEM

1. Remove control valve assembly. Refer to AT-282.
2. Check the following items:
- Overrun clutch control valve
- Overrun clutch reducing valve
- Overrun clutch solenoid valve

OK or NG

OK	▶	GO TO 6.
NG	▶	Repair or replace damaged parts.

6	CHECK SYMPTOM

Check again.

OK or NG

OK	▶	**INSPECTION END**
NG	▶	GO TO 7.

7	CHECK TCM INSPECTION	
1. Perform TCM input/output signal inspection. 2. If NG, recheck TCM pin terminals for damage or loose connection with harness connector. **OK or NG**		
OK	▶	**INSPECTION END**
NG	▶	Repair or replace damaged parts.

Vehicle Does Not Start From D_1

=NHAT0103

SYMPTOM:
Vehicle does not start from D_1 on Cruise test — Part 2.

1	CHECK SELF-DIAGNOSTIC RESULTS	
Does self-diagnosis show damage to vehicle speed sensor·A/T (revolution sensor), shift solenoid valve A, B or vehicle speed sensor·MTR after cruise test?		
Yes or No		
Yes	▶	Check damaged circuit. Refer to “DTC P0720, P0750, P0755 or VHCL SPEED SEN·MTR”, AT-120, 178, 183 or 206.
No	▶	GO TO 2.

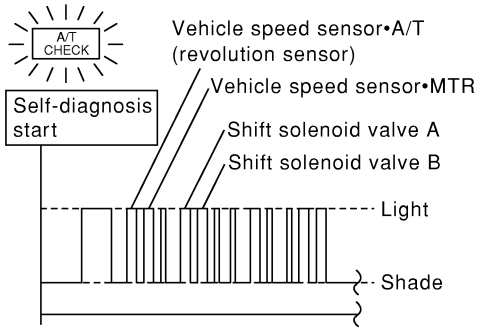

SAT583K

2	CHECK SYMPTOM	
Check again.		
OK or NG		
OK	▶	Go to “Vehicle Cannot Be Started From D_1”, AT-237.
NG	▶	GO TO 3.

3	CHECK TCM INSPECTION	
1. Perform TCM input/output signal inspection. 2. If NG, recheck TCM pin terminals for damage or loose connection with harness connector.		
OK or NG		
OK	▶	**INSPECTION END**
NG	▶	Repair or replace damaged parts.

A/T Does Not Shift: $D_4 \rightarrow D_3$, When 3rd Position Switch ON $\rightarrow$ OFF

=NHAT0104

SYMPTOM:
A/T does not shift from D_4 to D_3 when changing selector lever from D to 3rd position.

1	CHECK 3RD POSITION SWITCH CIRCUIT
With CONSULT-II Does “TCM INPUT SIGNALS” in “DATA MONITOR” show damage to 3rd position switch circuit?	
Without CONSULT-II Does self-diagnosis show damage to 3rd position switch circuit?	

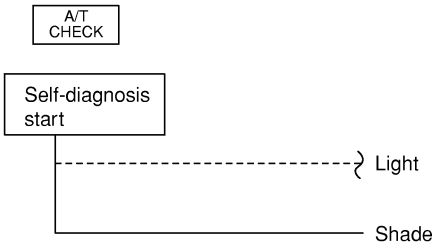

SAT555K

Yes or No

Yes	▶	Check 3rd position switch circuit. Refer to “TCM Self-diagnosis Does Not Activate”, AT-265.
No	▶	Go to “A/T Does Not Shift: $D_2 \rightarrow D_3$”, AT-243.

A/T Does Not Shift: $D_3 \rightarrow 2_2$, When Selector Lever D → 2nd Position

=NHAT0105

SYMPTOM:
A/T does not shift from D_3 to 2_2 when changing selector lever from D to 2nd position.

1	CHECK PARK/NEUTRAL POSITION (PNP) SWITCH CIRCUIT
With CONSULT-II Does “TCM INPUT SIGNALS” in “DATA MONITOR” show damage to park/neutral position (PNP) switch circuit?	
Without CONSULT-II Does self-diagnosis show damage to park/neutral position (PNP) switch circuit?	

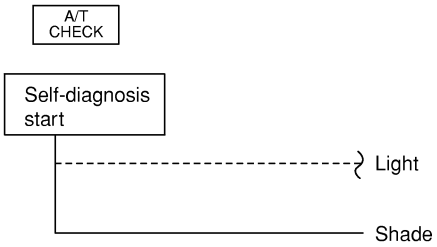

SAT555K

Yes or No

Yes	▶	Check park/neutral position (PNP) switch circuit. Refer to “DTC P0705”, AT-108.
No	▶	Go to “A/T Does Not Shift: $D_1 \rightarrow D_2$ or Does Not Kickdown: $D_4 \rightarrow D_2$”, AT-240.

A/T Does Not Shift: $2_2 \rightarrow 1_1$, When Selector Lever 2nd → 1st Position

=NHAT0106

SYMPTOM:
A/T does not shift from 2_2 to 1_1 when changing selector lever from 2nd to 1st position.

1	CHECK PARK/NEUTRAL POSITION (PNP) SWITCH CIRCUIT
With CONSULT-II Does “TCM INPUT SIGNALS” in “DATA MONITOR” show damage to park/neutral position (PNP) switch circuit?	
Without CONSULT-II Does self-diagnosis show damage to park/neutral position (PNP) switch circuit?	

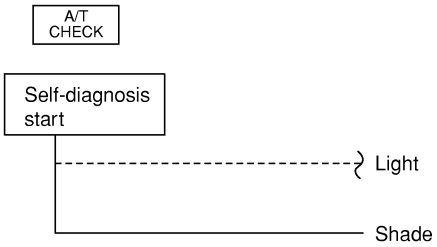

SAT555K

Yes or No

Yes	▶	Check park/neutral position (PNP) switch circuit. Refer to “DTC P0705”, AT-108.
No	▶	GO TO 2.

2	ADJUST CONTROL CABLE
Check control cable. Refer to AT-284.	

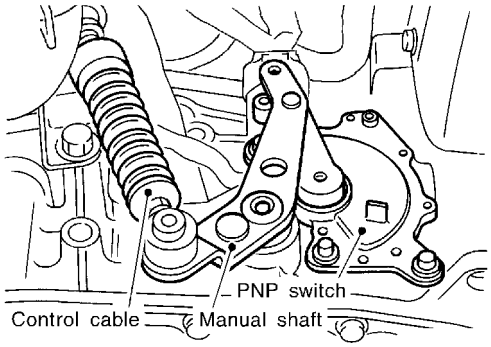

SAT023JA

OK or NG

OK	▶	GO TO 3.
NG	▶	Adjust control cable. Refer to AT-284.

3	CHECK VEHICLE SPEED SENSOR·A/T AND VEHICLE SPEED SENSOR·MTR CIRCUIT
Check vehicle speed sensor·A/T (revolution sensor) and vehicle speed sensor·MTR circuit. Refer to “DTC P0720 and VHCL SPEED SEN·MTR”, AT-120 and AT-206.	

OK or NG

OK	▶	GO TO 4.
NG	▶	Repair or replace vehicle speed sensor·A/T (revolution sensor) and vehicle speed sensor·MTR circuits.

4	CHECK A/T FLUID CONDITION

1. Remove oil pan.
2. Check A/T fluid condition.

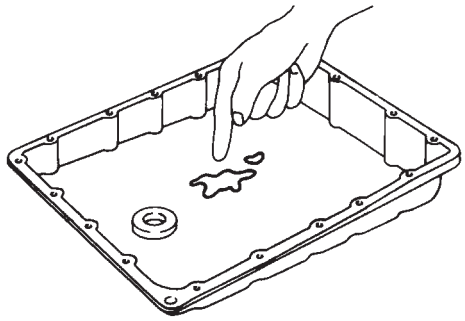

SAT171B

OK or NG

OK	▶	GO TO 6.
NG	▶	GO TO 5.

5	DETECT MALFUNCTIONING ITEM

1. Remove control valve. Refer to AT-282.
2. Check the following items:
- Shift solenoid valve A
- Overrun clutch solenoid valve
3. Disassemble A/T. Refer to AT-293.
4. Check the following items:
- Servo piston assembly
- Brake band

OK or NG

OK	▶	GO TO 6.
NG	▶	Repair or replace damaged parts.

6	CHECK SYMPTOM

Check again.

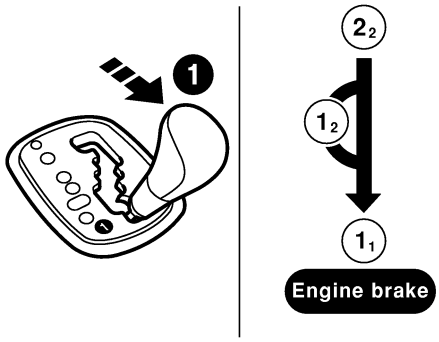

SAT514K

OK or NG

OK	▶	**INSPECTION END**
NG	▶	GO TO 7.

7	CHECK TCM INSPECTION	
1. Perform TCM input/output signal inspection. 2. If NG, recheck TCM pin terminals for damage or loose connection with harness connector.		
OK or NG		
OK	▶	**INSPECTION END**
NG	▶	Repair or replace damaged parts.

Vehicle Does Not Decelerate By Engine Brake

=NHAT0107

SYMPTOM:
Vehicle does not decelerate by engine brake when shifting from 2_2 (1_2) to 1_1.

1	CHECK PARK/NEUTRAL POSITION (PNP) SWITCH CIRCUIT
With CONSULT-II Does “TCM INPUT SIGNALS” in “DATA MONITOR” show damage to park/neutral position (PNP) switch circuit?	
Without CONSULT-II Does self-diagnosis show damage to park/neutral position (PNP) switch circuit?	

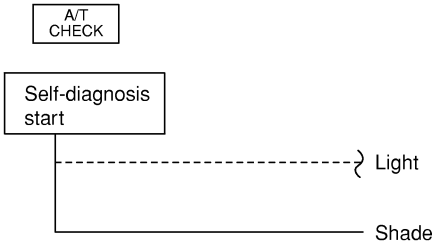

SAT555K

Yes or No

Yes	▶	Check park/neutral position (PNP) switch circuit. Refer to “DTC P0705”, AT-108.
No	▶	GO TO 2.

2	ADJUST CONTROL CABLE
Check control cable. Refer to AT-284.	

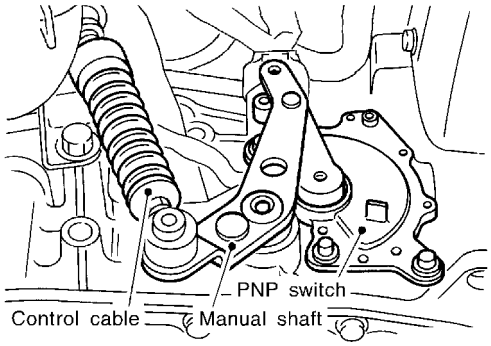

SAT023JA

OK or NG

OK	▶	GO TO 3.
NG	▶	Adjust control cable. Refer to AT-284.

3	CHECK VEHICLE SPEED SENSOR·A/T AND VEHICLE SPEED SENSOR·MTR CIRCUIT
Check vehicle speed sensor·A/T (revolution sensor) and vehicle speed sensor·MTR circuit. Refer to “DTC P0720 and VHCL SPEED SEN·MTR”, AT-120 and AT-206.	

OK or NG

OK	▶	GO TO 4.
NG	▶	Repair or replace vehicle speed sensor·A/T (revolution sensor) and vehicle speed sensor·MTR circuits.

4	CHECK A/T FLUID CONDITION

1. Remove oil pan.
2. Check A/T fluid condition.

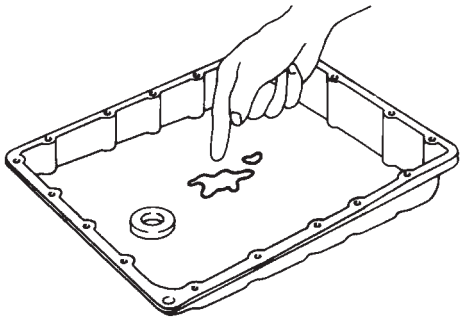

SAT171B

OK or NG

OK	▶	GO TO 6.
NG	▶	GO TO 5.

5	DETECT MALFUNCTIONING ITEM

1. Remove control valve. Refer to AT-282.
2. Check the following items:
- Shift valve A
- Overrun clutch solenoid valve
3. Disassemble A/T. Refer to AT-293.
4. Check the following items:
- Overrun clutch assembly
- Low & reverse brake assembly

OK or NG

OK	▶	GO TO 6.
NG	▶	Repair or replace damaged parts.

6	CHECK SYMPTOM

Check again.

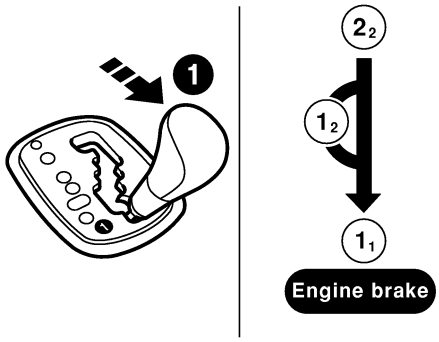

SAT514K

OK or NG

OK	▶	**INSPECTION END**
NG	▶	GO TO 7.

7	CHECK TCM INSPECTION	
1. Perform TCM input/output signal inspection. 2. If NG, recheck TCM pin terminals for damage or loose connection with harness connector. **OK or NG**		
OK	▶	**INSPECTION END**
NG	▶	Repair or replace damaged parts.

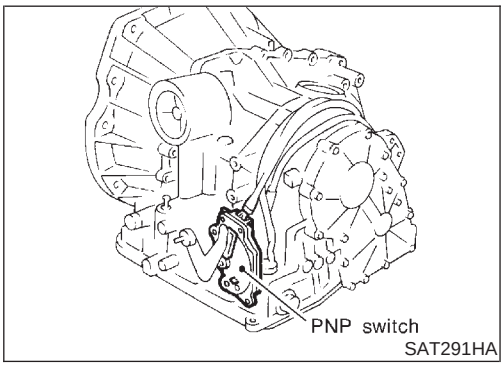

SAT291HA

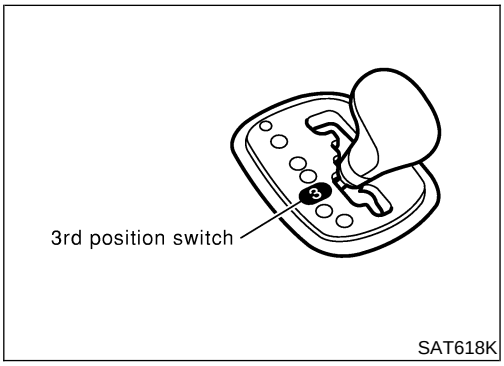

SAT618K

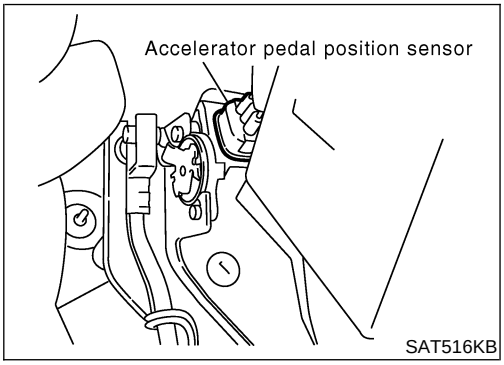

SAT516KB

TCM Self-diagnosis Does Not Activate

NHAT0108

SYMPTOM:

A/T CHECK indicator lamp does not come on in TCM self-diagnostic procedure even if the lamp circuit is good.

DESCRIPTION

NHAT0108S01

- Park/neutral position (PNP) switch
  The park/neutral (PNP) switch includes a transmission range switch. The transmission range switch detects the selector lever position and sends a signal to the TCM.
- 3rd position switch
  Detects the 3rd position and sends a signal to the TCM.
- Closed throttle position signal and wide-open throttle position signal
  ECM judges throttle opening based on a signal from accelerator pedal position sensor, and sends the signal via CAN communication to TCM.

DIAGNOSTIC PROCEDURE

=NHAT0108S02

1	INSPECTION START
Do you have CONSULT-II?	
Yes or No	
Yes (With CONSULT-II) ▶	GO TO 2.
No (Without CONSULT-II) ▶	GO TO 4.

2	CHECK PARK/NEUTRAL POSITION (PNP) SWITCH CIRCUIT (With CONSULT-II)

With CONSULT-II

1. Turn ignition switch to "ON" position.
   (Do not start engine.)
2. Select "TCM INPUT SIGNALS" in "DATA MONITOR" mode for "A/T" with CONSULT-II.
3. Read out P/N, R, D, 2nd and 1st position switches moving selector lever to each position.
   Check that the signal of the selector lever position is indicated properly.

DATA MONITOR	
MONITORING	
PN POSI SW	OFF
R POSITION SW	OFF
D POSITION SW	OFF
2 POSITION SW	ON
1 POSITION SW	OFF

SAT701J

OK or NG

OK ▶	GO TO 6.
NG ▶	GO TO 3.

3	DETECT MALFUNCTIONING ITEM

Check the following items:
- Park/neutral position (PNP) switch

a. Check continuity between PNP switch harness connector F94 terminals 1 (G/OR) and 2 (B) and between terminals 3 (OR) and 4 (PU/W), 5 (P/B), 6 (Y/PU), 7 (BR), 8 (G/W), 9 (GY/R) while moving manual shaft through each position.

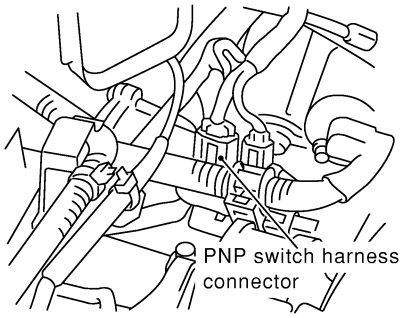

View with air cleaner box removed

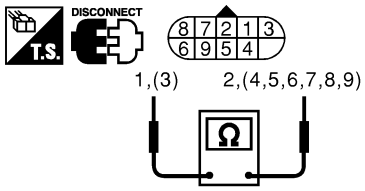

Lever position	Terminal No.	
P	3 - 7	1 - 2
R	3 - 8	
N	3 - 9	1 - 2
D	3 - 6	
2	3 - 5	
1	3 - 4	

SAT615JA

b. If NG, check again with manual control cable disconnected from manual shaft of A/T assembly. Refer to step a.
c. If OK on step b, adjust manual control cable. Refer to AT-284.
d. If NG on step b, remove park/neutral position (PNP) switch from A/T and check continuity of park/neutral position (PNP) switch terminals. Refer to step a.
e. If OK on step d, adjust park/neutral position (PNP) switch. Refer to AT-283.
f. If NG on step d, replace park/neutral position (PNP) switch.
- Harness for short or open between ignition switch and park/neutral position (PNP) switch
- Harness for short or open between park/neutral position (PNP) switch and TCM

OK or NG

OK	▶	GO TO 6.
NG	▶	Repair or replace damaged parts.

4	CHECK PARK/NEUTRAL POSITION (PNP) SWITCH CIRCUIT (Without CONSULT-II)

Without CONSULT-II

1. Turn ignition switch to ON position. (Do not start engine.)
2. Check voltage between TCM harness connector F50 terminals 26 (PU/R), 27 (P/B), 34 (Y/PU), 35 (G/W), 36 (R/G) and ground while moving selector lever through each position.

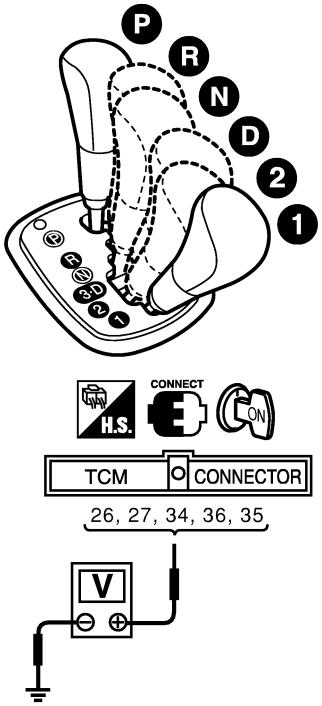

SAT588K

Voltage:
B: Battery voltage
0: 0V

Lever position	Terminal No.				
	36	35	34	27	26
P, N	**B**	0	0	0	0
R	0	**B**	0	0	0
D	0	0	**B**	0	0
2	0	0	0	**B**	0
1	0	0	0	0	**B**

MTBL0119

OK or NG

OK	▶	GO TO 8.
NG	▶	GO TO 5.

5	DETECT MALFUNCTIONING ITEM

Check the following items:
- Park/neutral position (PNP) switch

a. Check continuity between PNP switch harness connector F94 terminals 1 (G/OR) and 2 (B) and between terminals 3 (OR) and 4 (PU/W), 5 (P/B), 6 (Y/PU), 7 (BR), 8 (G/W), 9 (GY/R) while moving manual shaft through each position.

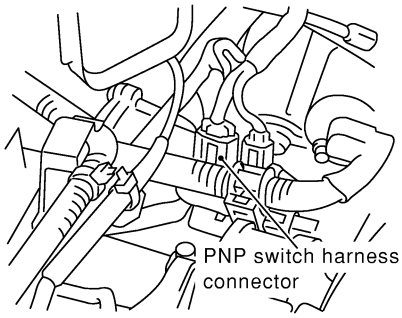

View with air cleaner box removed

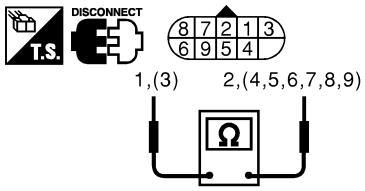

Lever position	Terminal No.	
P	3 - 7	1 - 2
R	3 - 8	
N	3 - 9	1 - 2
D	3 - 6	
2	3 - 5	
1	3 - 4	

SAT615JA

b. If NG, check again with manual control cable disconnected from manual shaft of A/T assembly. Refer to step a.
c. If OK on step b, adjust manual control cable. Refer to AT-284.
d. If NG on step b, remove park/neutral position (PNP) switch from A/T and check continuity of park/neutral position (PNP) switch terminals. Refer to step a.
e. If OK on step d, adjust park/neutral position (PNP) switch. Refer to AT-283.
f. If NG on step d, replace park/neutral position (PNP) switch.
- Harness for short or open between ignition switch and park/neutral position (PNP) switch
- Harness for short or open between park/neutral position (PNP) switch and TCM

OK or NG

OK	▶	GO TO 8.
NG	▶	Repair or replace damaged parts.

6	CHECK 3RD POSITION SWITCH CIRCUIT (With CONSULT-II)

With CONSULT-II
1. Turn ignition switch to "ON" position.
   (Do not start engine.)
2. Select "TCM INPUT SIGNALS" in "DATA MONITOR" mode for "A/T" with CONSULT-II.
3. Read out "OVERDRIVE SW"*.
   Check the signal of the overdrive control switch is indicated properly.
   (Overdrive control switch "ON" displayed on CONSULT-II means overdrive "OFF".)
   *: "OVERDRIVE SW" means 3rd position switch

DATA MONITOR	
MONITORING	
ENGINE SPEED	XXX rpm
TURBINE REV	XXX rpm
OVERDRIVE SW	ON
PN POSI SW	OFF
R POSITION SW	OFF

SAT645J

OK or NG

OK	▶	GO TO 10.
NG	▶	GO TO 7.

7	DETECT MALFUNCTIONING ITEM

Check the following items:
- 3rd position switch.

a. Check continuity between A/T device (3rd position switch) harness connector M165 terminals 1 (G/Y) and 2 (B).

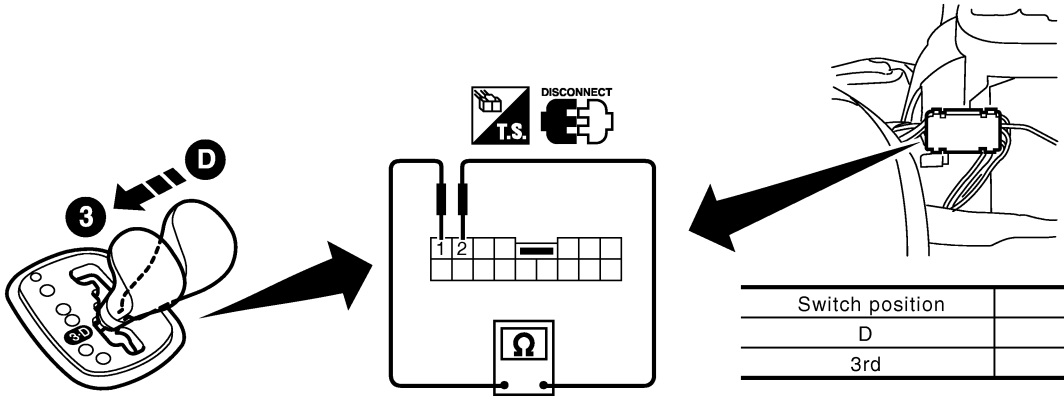

Switch position	Continuity
D	No
3rd	Yes

SAT855K

- Harness for short or open between TCM and 3rd position switch
- Harness of ground circuit for 3rd position switch for short or open

OK or NG

OK	▶	GO TO 10.
NG	▶	Repair or replace damaged parts.

8	CHECK 3RD POSITION SWITCH CIRCUIT (Without CONSULT-II)

Without CONSULT-II

1. Turn ignition switch to ON position.
   (Do not start engine.)
2. Check voltage between TCM harness connector F51 terminal 22 (G/Y) and ground when 3rd position switch is ON and OFF.

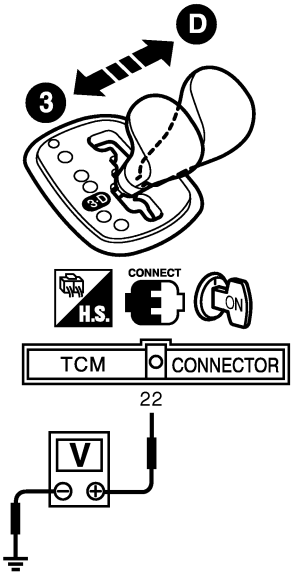

Switch position	Voltage
D	Battery voltage
3rd	0V

SAT617KA

OK or NG

OK	▶	GO TO 12.
NG	▶	GO TO 9.

9	DETECT MALFUNCTIONING ITEM

Check the following items:
- 3rd position switch.

a. Check continuity between A/T device (3rd positions witch) harness connector M165 terminals 1 (G/Y) and 2 (B).

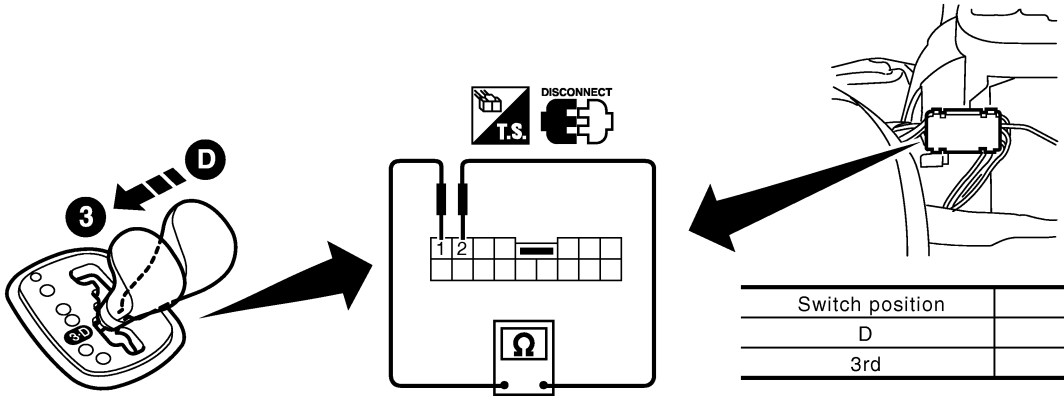

Switch position	Continuity
D	No
3rd	Yes

SAT855K

- Harness for short or open between TCM and 3rd position switch
- Harness of ground circuit for 3rd position switch for short or open

OK or NG

OK	▶	GO TO 12.
NG	▶	Repair or replace damaged parts.

10	CHECK CLOSED THROTTLE POSITION AND WIDE OPEN THROTTLE POSITION SIGNAL CIRCUIT (With CONSULT-II)

With CONSULT-II

1. Turn ignition switch to "ON" position.
   (Do not start engine.)
2. Select "TCM INPUT SIGNALS" in "DATA MONITOR" mode for "A/T" with CONSULT-II.
3. Read out "CLOSED THL/SW" and "W/O THRL/P-SW" depressing and releasing accelerator pedal.
   Check the signal of throttle position switch is indicated properly.

Accelerator pedal condition	Data monitor	
	CLOSED THL/SW	W/O THRL/P-SW
Released	ON	OFF
Fully depressed	OFF	ON

MTBL0011

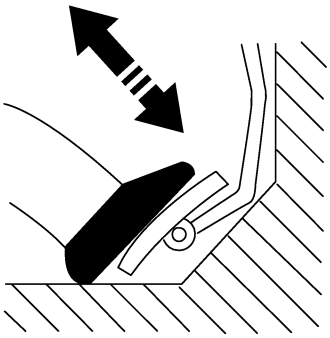

DATA MONITOR	
MONITORING	
POWERSHIFT SW	OFF
CLOSED THL/SW	OFF
W/O THRL/P-SW	OFF
HOLD SW	OFF
BRAKE SW	ON

SAT646J

OK or NG

OK	▶	GO TO 13.
NG	▶	GO TO 11.

11	DETECT MALFUNCTIONING ITEM

Check the following items:
- Accelerator pedal position sensor
- Harness for short or open between accelerator pedal position sensor and ECM

OK or NG

OK	▶	GO TO 13.
NG	▶	Repair or replace damaged parts.

12	CHECK CLOSED THROTTLE POSITION AND WIDE OPEN THROTTLE POSITION SIGNAL CIRCUIT (Without CONSULT-II)

Without CONSULT-II

Check the following items:
- Accelerator pedal position sensor
- Harness for short or open between accelerator pedal position sensor and ECM

OK or NG

OK	▶	GO TO 13.
NG	▶	Repair or replace damaged part.

13	CHECK DTC	
Perform "TCM SELF-DIAGNOSTIC PROCEDURE (NO TOOLS)", AT-52.		
	OK or NG	
OK	▶	**INSPECTION END**
NG	▶	GO TO 14.

14	CHECK TCM INSPECTION	
1. Perform TCM input/output signal inspection. 2. If NG, recheck TCM pin terminals for damage or loose connection with harness connector.		
	OK or NG	
OK	▶	**INSPECTION END**
NG	▶	Repair or replace damaged parts.

Description

NHAT0109

- The electrical key interlock mechanism also operates as a shift lock:
  With the key switch turned to ON, the selector lever cannot be shifted from P (parking) to any other position unless the brake pedal is depressed.
  With the key removed, the selector lever cannot be shifted from P to any other position.
  The key cannot be removed unless the selector lever is placed in P.
- The shift lock and key interlock mechanisms are controlled by the ON-OFF operation of the shift lock solenoid and by the operation of the rotator and slider located inside the key cylinder, respectively.

Shift Lock System Electrical Parts Location

NHAT0111

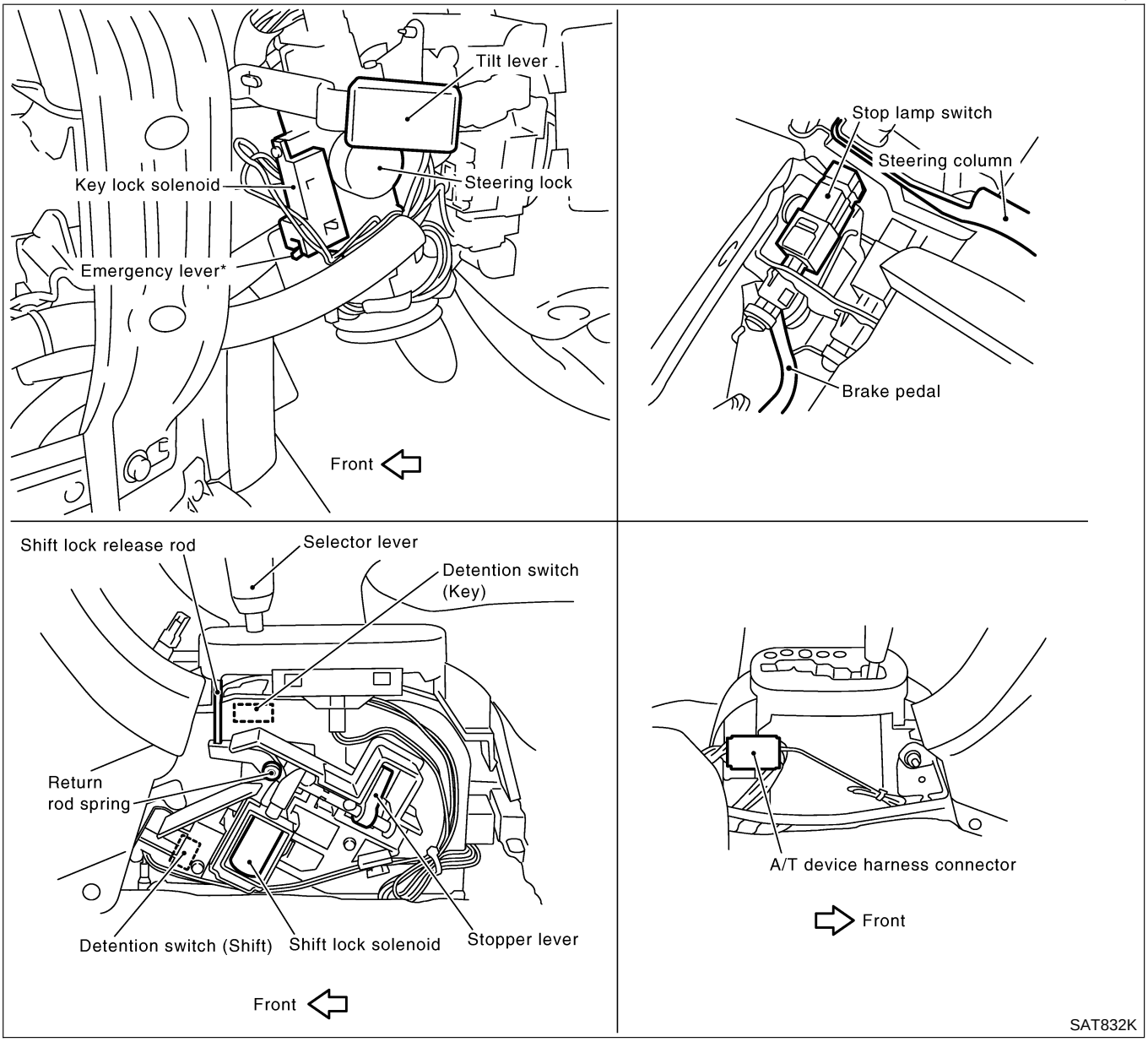

*: This emergency lever insures that when battery is off ignition key cannot be removed. In the situation like this, by operating this lever, ignition key can be removed.

Wiring Diagram — SHIFT —

NHAT0110

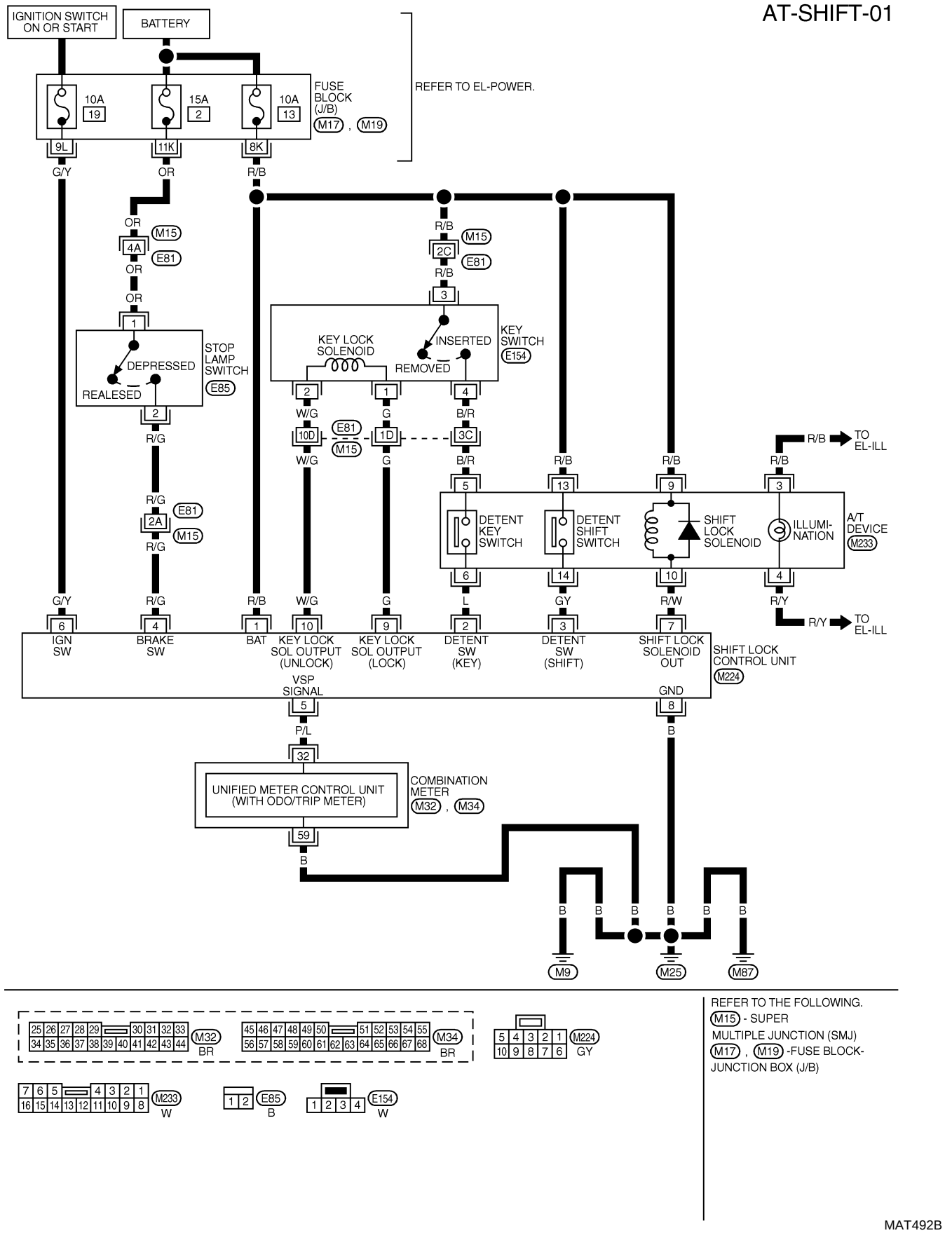

Shift Lock Control Unit Reference Values

NHAT0281

SHIFT LOCK HARNESS CONNECTOR TERMINAL LAYOUT

NHAT0281S01

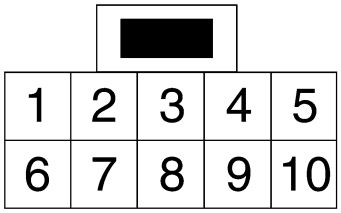

SCIA2004E

SHIFT LOCK CONTROL UNIT INSPECTION TABLE

NHAT0281S02

Data are reference values.

Terminal No. (Wire color)		Item	Condition	Judgement standard
1 (R/B)	8 (B)	Power source	Always	Battery voltage
2 (L)	8 (B)	Detention switch (for key)	When selector lever is not in “P” position with key inserted.	Battery voltage
			When selector lever is in “P” position with key inserted.	Approx. 0V
3 (GY)	8 (B)	Detention switch (for shift)	When selector lever is not in “P” position.	Battery voltage
			When selector lever is in “P” position.	Approx. 0V
4 (R/G)	8 (B)	Stop lamp switch	When brake pedal is depressed	Battery voltage
			When brake pedal is released	Approx. 0V
5 (P/L)	8 (B)	Vehicle speed signal (8pulse signal)	Speed meter is operated	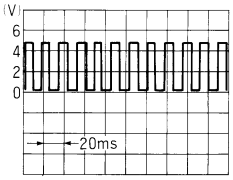 ELF1084D
6 (G/Y)	8 (B)	Ignition signal	Ignition switch: OFF	Approx. 0V
			Ignition switch: ON	Battery voltage
7 (R/W)	8 (B)	Shift lock solenoid	● When selector lever is in “P” position, brake pedal is depressed, and ignition switch is ON. ● When selector lever is not in “P” position, ignition switch is ON, and vehicle speed is 10 km/h or less. ● For 3 minutes after selector lever is not in “P” position, vehicle speed is 10 km/h or less, and ignition switch is ON → OFF.	Approx. 0V
			Except the above	Battery voltage
8 (B)	—	Ground	—	Approx. 0V

Shift Lock Control Unit Reference Values (Cont'd)

Terminal No. (Wire color)		Item	Condition	Judgement standard
9 (G)	8 (B)	Key lock solenoid	When selector lever is not in "P" position.	Battery voltage for approx. 0.1 sec. (Note)
			When selector lever is in "P" position.	Approx. 0V
10 (W/G)	8 (B)	Key unlock solenoid	When selector lever is in "P" position with ignition switch is OFF.	Battery voltage for approx. 0.1 sec. (Note)
			When selector lever is not in "P" position with ignition switch is OFF.	Approx. 0V

NOTE:

Make sure that the pointer swings only momentarily because the output time is so short. If the inspection is done with an oscilloscope, it should be observed that the power source voltage lasts for 3.5 to 10 ms.

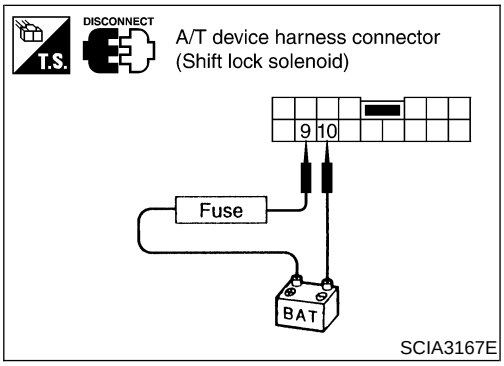

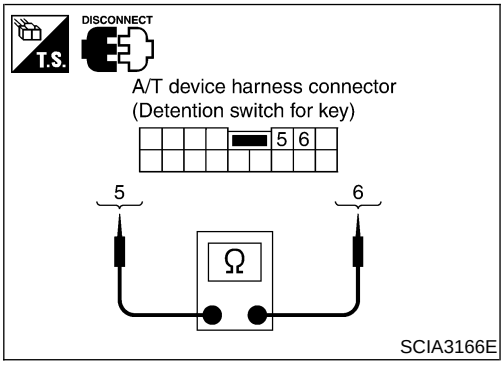

Component Inspection

NHAT0280

SHIFT LOCK SOLENOID

NHAT0280S01

- Check operation by applying battery voltage to the A/T device harness connector terminal.

CAUTION:

Be sure to apply the voltage of the correct polarity to the respective terminals. Otherwise, the part may be damaged.

Connector No.	Terminal No. (Wire color)
M223	9 (R/B) (Battery voltage) - 10 (R/W) (Ground)

DETENTION SWITCH

NHAT0280S02

For Key:

NHAT0280S0201

- Check continuity between terminals of the A/T device harness connector terminals.

Condition	Connector No.	Terminal No. (Wire color)	Continuity
When selector lever is in "P" position.	M223	5 (B/R) - 6 (L)	No
When selector lever is not in "P" position.			Yes

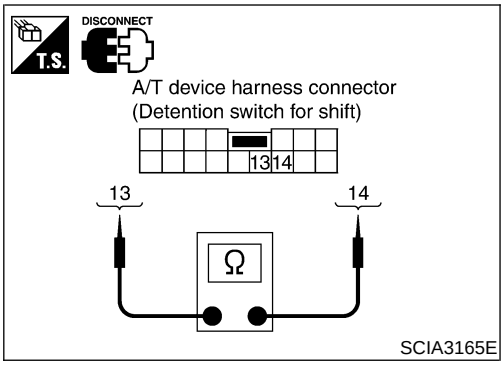

For shift:

NHAT0280S0202

- Check continuity between terminals of the A/T device harness connector terminals.

Condition	Connector No.	Terminal No. (Wire color)	Continuity
When selector lever is in "P" position.	M223	13 (R/B) - 14 (GY)	No
When selector lever is not in "P" position.			Yes

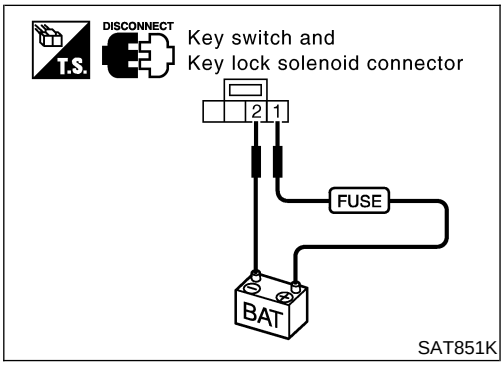

KEY LOCK SOLENOID

NHAT0280S03

Key Lock

NHAT0280S0301

- Check operation by applying battery voltage to key switch and key lock solenoid connector.

CAUTION:

Be careful not to cause burnout of the harness.

Connector No.	Terminal No. (Wire color)
E154	1 (G) (Battery voltage) - 2 (W/G) (Ground)

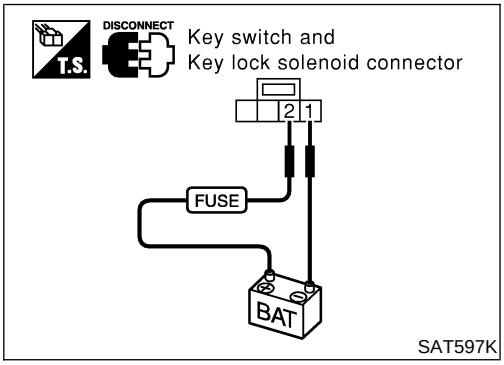

Key Unlock

NHAT0280S0302

- Check operation by applying battery voltage to key switch and key lock solenoid connector.

CAUTION:

Be careful not to cause burnout of the harness.

Connector No.	Terminal No. (Wire color)
E154	2 (W/G) (Battery voltage) - 1 (G) (Ground)

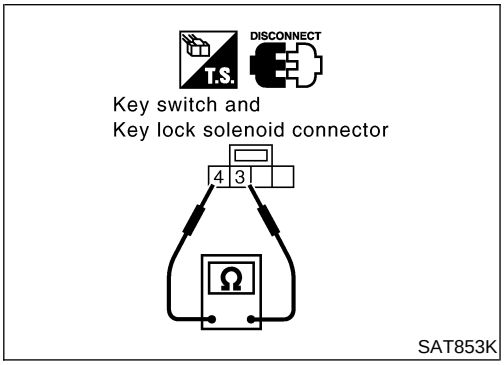

KEY SWITCH

NHAT0280S04

- Check continuity between terminals of the key switch and key lock solenoid connector.

Condition	Connector No.	Terminal No. (Wire color)	Continuity
Key inserted	E154	3 (R/B) - 4 (B/R)	Yes
Key withdrawn			No

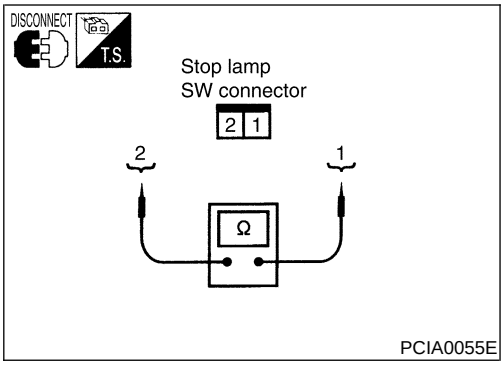

STOP LAMP SWITCH

NHAT0280S05

- Check continuity between terminals of the stop lamp switch connector.

Condition	Connector No.	Terminal No. (Wire color)	Continuity
When brake pedal is depressed	E85	1 (OR) - 2 (R/G)	Yes
When brake pedal is released			No

Check stop lamp switch after adjusting brake pedal. Refer to BR-11, "BRAKE PEDAL AND BRACKET".

Control Cable

NHAT0263

SEC. 349

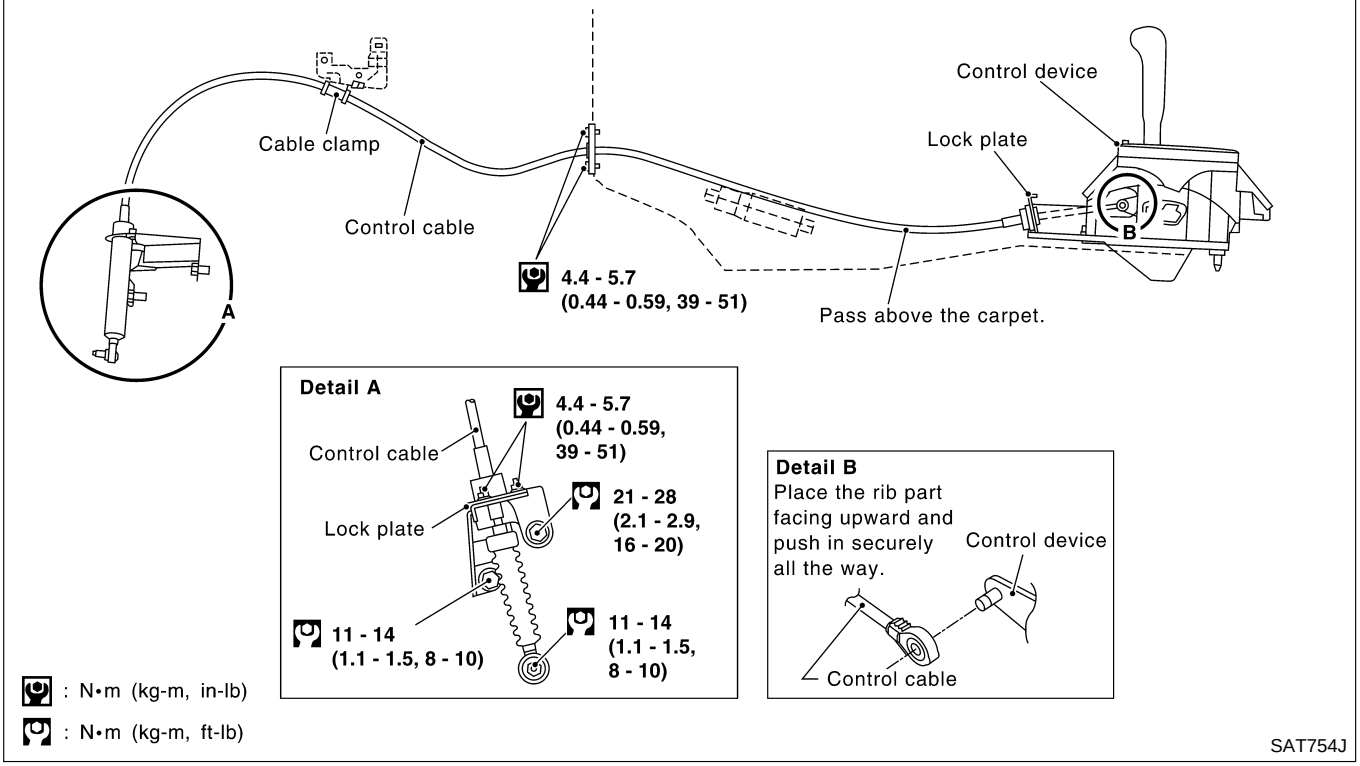

Control Valve Assembly and Accumulators

NHAT0114

REMOVAL

NHAT0114S01

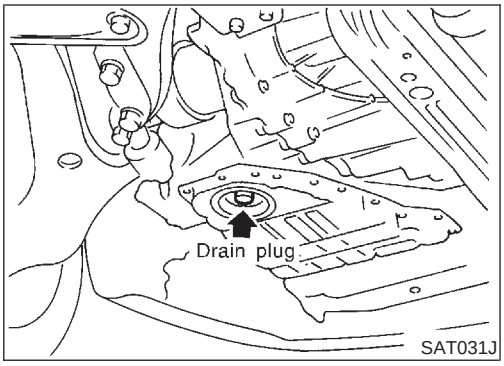

1. Drain ATF from transaxle.
2. Remove oil pan and gasket.

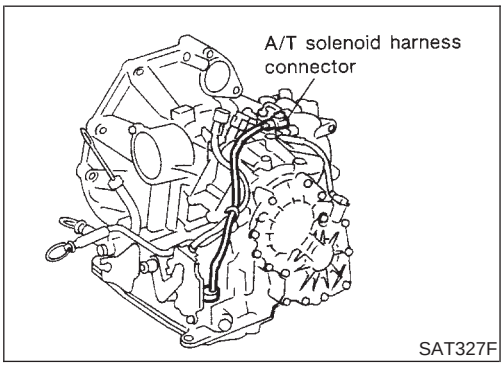

3. Disconnect A/T solenoid harness connector.

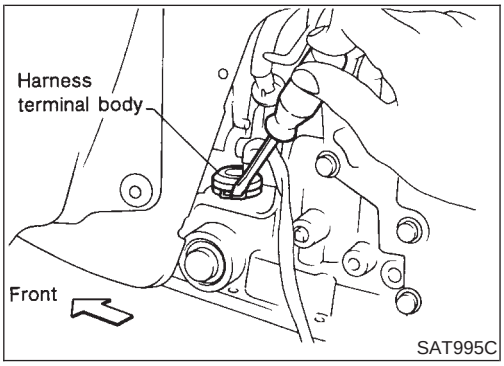

4. Remove stopper ring from terminal cord assembly harness terminal body.
5. Remove terminal cord assembly harness from transmission case by pushing on terminal body.

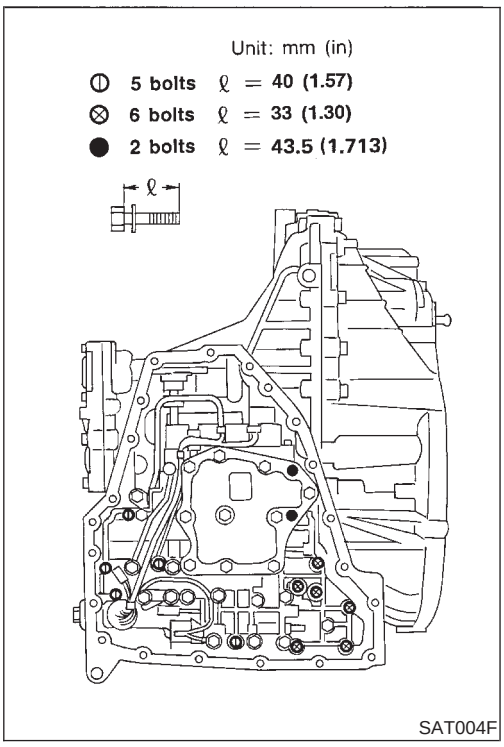

6. Remove control valve assembly by removing fixing bolts **I**, **X** and ●.

Bolt length, number and location are shown in the illustration.

- **Be careful not to drop manual valve and servo release accumulator return spring.**

7. Disassemble and inspect control valve assembly if necessary. Refer to AT-314.

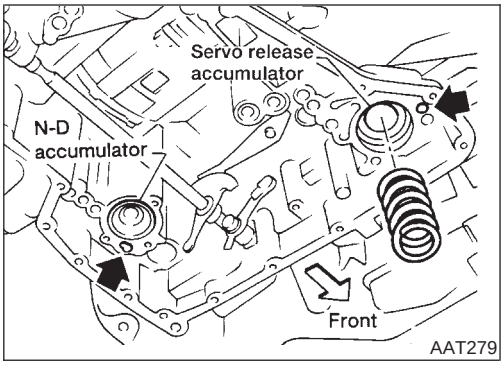

AAT279

8. Remove servo release and N-D accumulators by applying compressed air if necessary.
- **Hold each piston with a rag.**

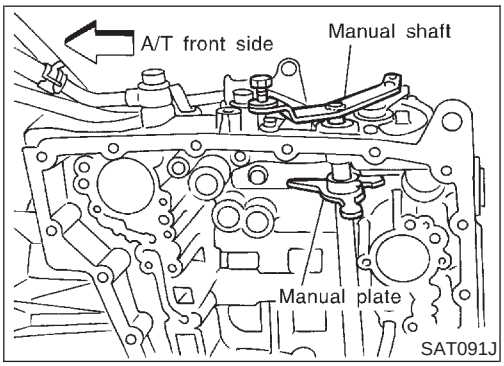

SAT091J

INSTALLATION
NHAT0114S02

- **Set manual shaft in Neutral, then align manual plate with groove in manual valve.**
- **After installing control valve assembly, make sure that selector lever can be moved to all positions.**

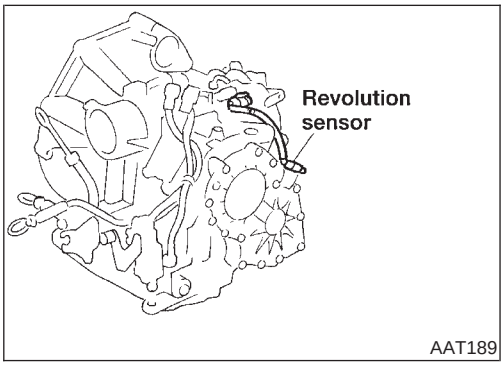

AAT189

Revolution Sensor Replacement
NHAT0115

1. Remove under cover.
2. Remove revolution sensor from A/T.
3. Reinstall any part removed.
- **Always use new sealing parts.**

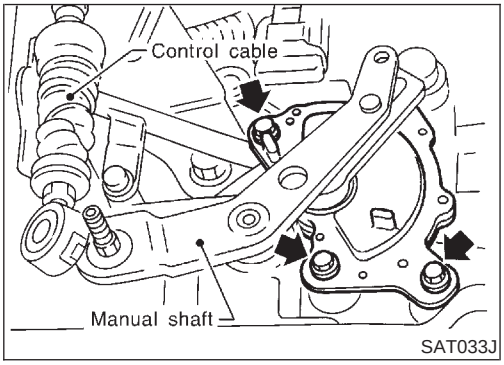

SAT033J

Park/Neutral Position (PNP) Switch Adjustment
NHAT0116

1. Remove control cable from manual shaft.
2. Set manual shaft in N position.
3. Loosen park/neutral position (PNP) switch fixing bolts.

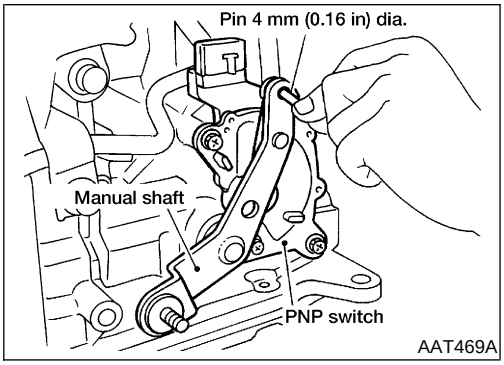

AAT469A

4. Insert pin into adjustment holes in both park/neutral position (PNP) switch and manual shaft as near vertical as possible.
5. Reinstall any part removed.
6. Check continuity of park/neutral position (PNP) switch. Refer to AT-108.

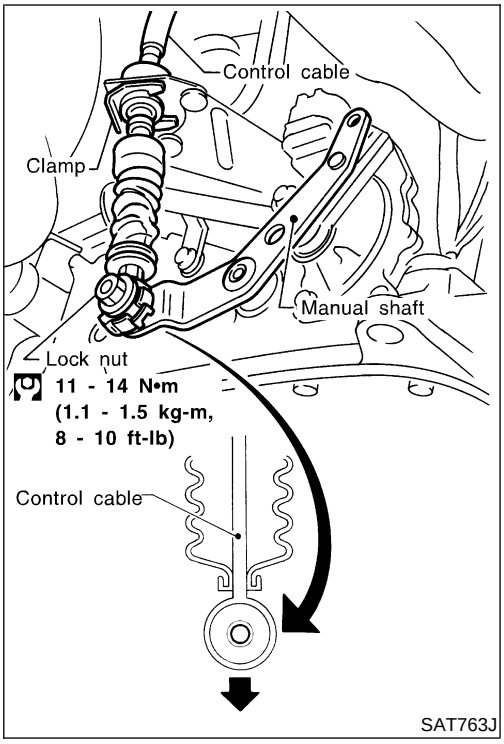

Control Cable Adjustment

NHAT0117

Move selector lever from the P position to the 1 position. You should be able to feel the detents in each position. If the detents cannot be felt or the pointer indicating the position is improperly aligned, the control cable needs adjustment.

1. Place selector lever in P position.
2. Loosen control cable lock nut and place manual shaft in P position.

CAUTION:

Turn wheels more than 1/4 rotations and apply the park lock.

3. Push control cable in the direction of the arrow shown in the illustration by specified force.

   Specified force: 4.9 - 9.8 N (0.5 - 1.0 kg, 1.1 - 2.2 lb)

4. Tighten control cable lock nut.
5. Move selector lever from P to 1 position again. Make sure that selector lever moves smoothly.

- **Make sure that the starter operates when the selector lever is placed in the N or P position.**
- **Make sure that the transmission is locked properly when the selector lever is placed in the P position.**

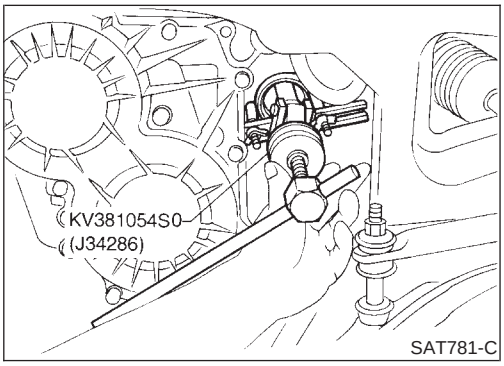

Differential Side Oil Seal Replacement

NHAT0118

1. Remove drive shaft assembly. Refer to AX-9, “Drive Shaft”.
2. Remove oil seal.

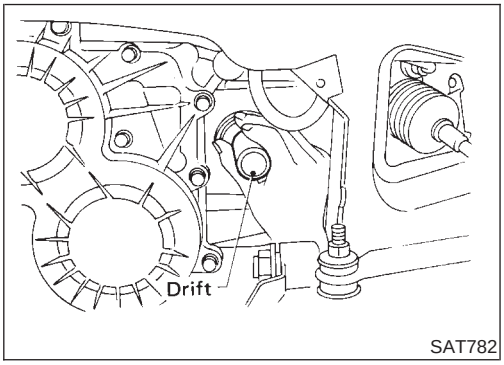

3. Install oil seal.

- **Apply ATF before installing.**

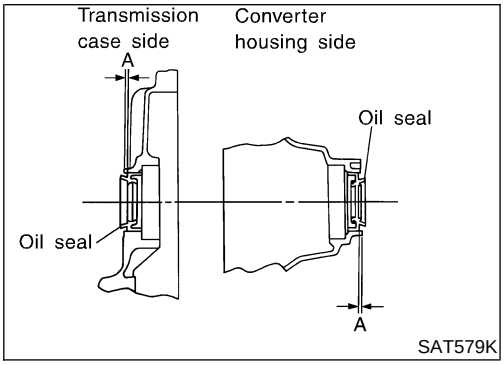

- **Install oil seals so dimension A is within specification**

  A: −0.5 mm (−0.02 in) to 0.5 mm (0.02 in)

4. Reinstall any part removed.

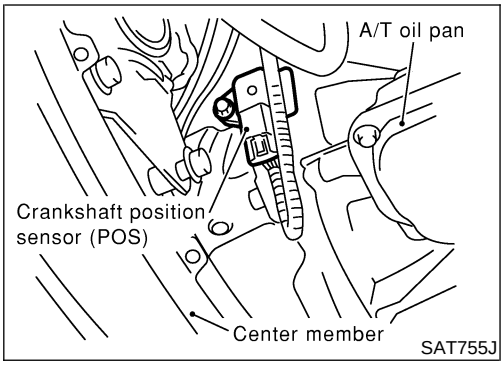

SAT755J

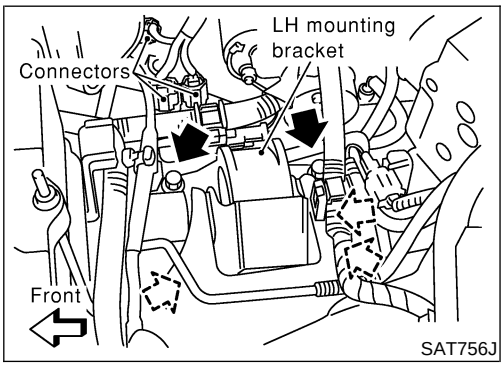

SAT756J

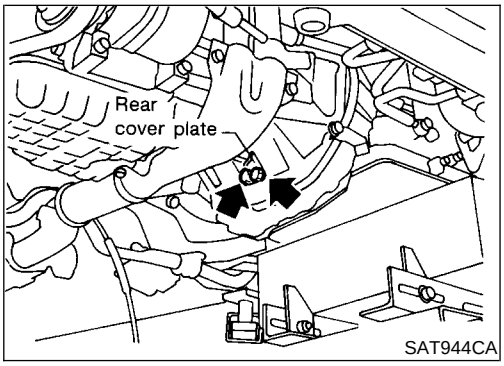

SAT944CA

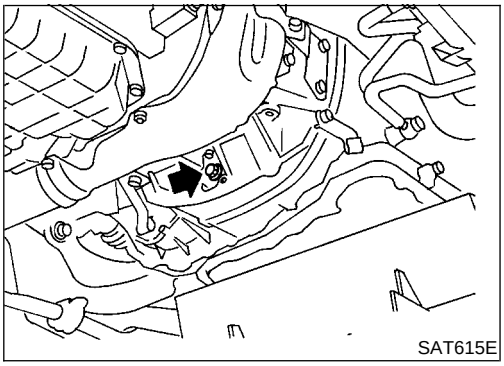
SAT615E

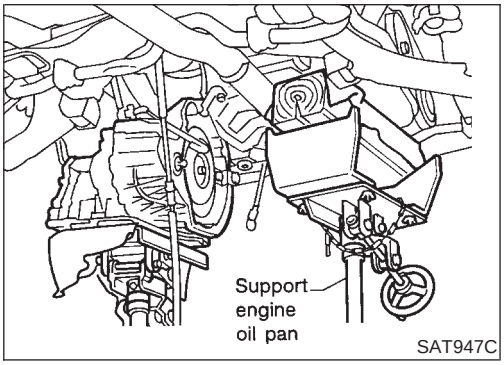

SAT947C

Removal

NHAT0119

CAUTION:

When removing the transaxle assembly from engine, first remove the crankshaft position sensor (POS) from the assembly.

Be careful not to damage sensor edge.

1. Remove battery and bracket.
2. Remove air cleaner and resonator.
3. Disconnect terminal cord assembly harness connector and park/neutral position (PNP) switch harness connectors.
4. Disconnect harness connectors of revolution sensor, ground and vehicle speed sensor.
5. Remove crankshaft position sensor (POS) from transaxle.
6. Remove LH mounting bracket from transaxle and body.
7. Disconnect control cable at transaxle side.
8. Drain ATF.
9. Remove exhaust front tube.
10. Remove drive shafts. Refer to AX-9, “Drive Shaft”.
11. Disconnect fluid cooler hoses.
12. Remove starter motor from transaxle.
13. Support engine by placing a jack under oil pan.
- **Do not place jack under oil pan drain plug.**
14. Remove center member.
15. Remove rear cover plate and bolts securing torque converter to drive plate.
- **Rotate crankshaft for access to securing bolts.**
16. Support transaxle with a jack.
17. Remove bolts fixing A/T to engine.
18. Lower transaxle while supporting it with a jack.

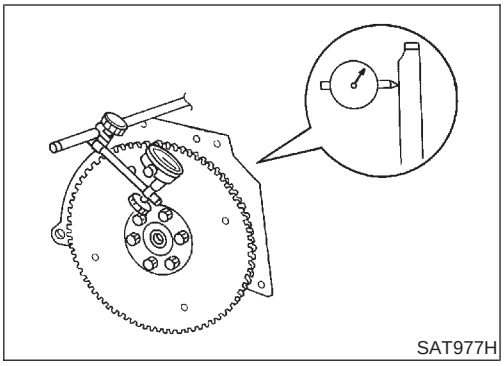

Installation

NHAT0120

- Drive plate runout

CAUTION:

Do not allow any magnetic materials to contact the ring gear teeth.

Maximum allowable runout:

Refer to EM-82, "Drive Plate Runout".

- If this runout is outside the standard, replace drive plate and ring gear.

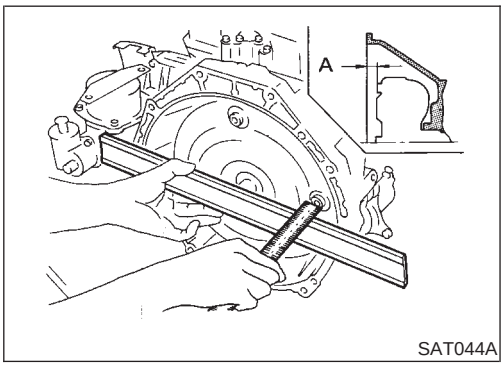

- When connecting torque converter to transaxle, measure distance "A" to be certain that they are correctly assembled.

Distance "A":

14 mm (0.55 in) or more

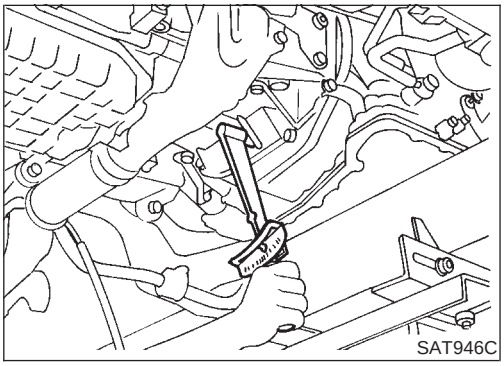

- Install bolts fixing converter to drive plate.
- **With converter installed, rotate crankshaft several turns to check that transaxle rotates freely without binding.**

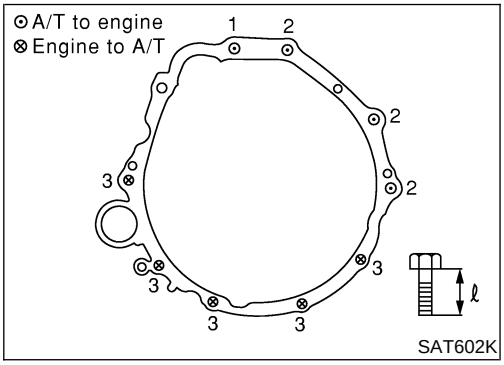

- Tighten bolts securing transaxle.
- Tighten LH mounting bracket bolts to the specified torque. Refer to EM-69, "Removal and Installation".
- Tighten center member bolts to the specified torque. Refer to EM-69, "Removal and Installation".
- Tighten rear plate cover bolts to the specified torque. Refer to EM-14, "OIL PAN".

Bolt No.	Tightening torque N·m (kg-m, ft-lb)	ℓ mm (in)
1	69.6 - 79.4 (7.1 - 8.0, 52 - 58)	65 (2.56)
2	69.6 - 79.4 (7.1 - 8.0, 52 - 58)	52 (2.05)
3	69.6 - 79.4 (7.1 - 8.0, 52 - 58)	40 (1.57)

- Reinstall any part removed.

- Check fluid level in transaxle.
- Move selector lever through all positions to be sure that transaxle operates correctly.
  With parking brake applied, rotate engine at idling. Move selector lever through N to D, to 3, to 2, to 1 and to R position. A slight shock should be felt by hand gripping selector each time transaxle is shifted.
- Perform road test. Refer to AT-69.

Components

NHAT0121

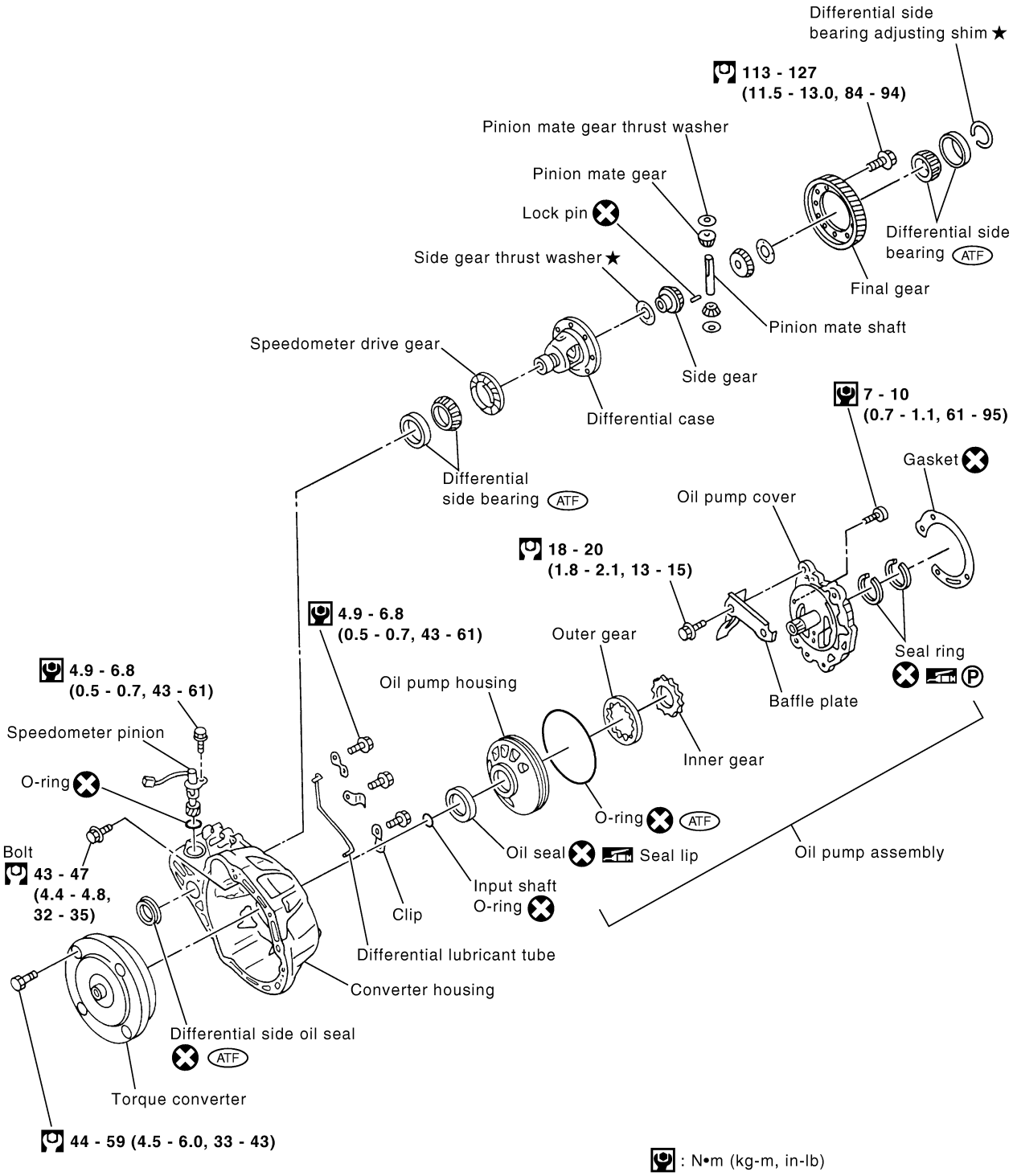

: N•m (kg-m, in-lb)
: N•m (kg-m, ft-lb)
ATF : Apply ATF.
: Apply petroleum jelly.
★ : Select with proper thickness.
: Always replace after every disassembly.

SAT833K

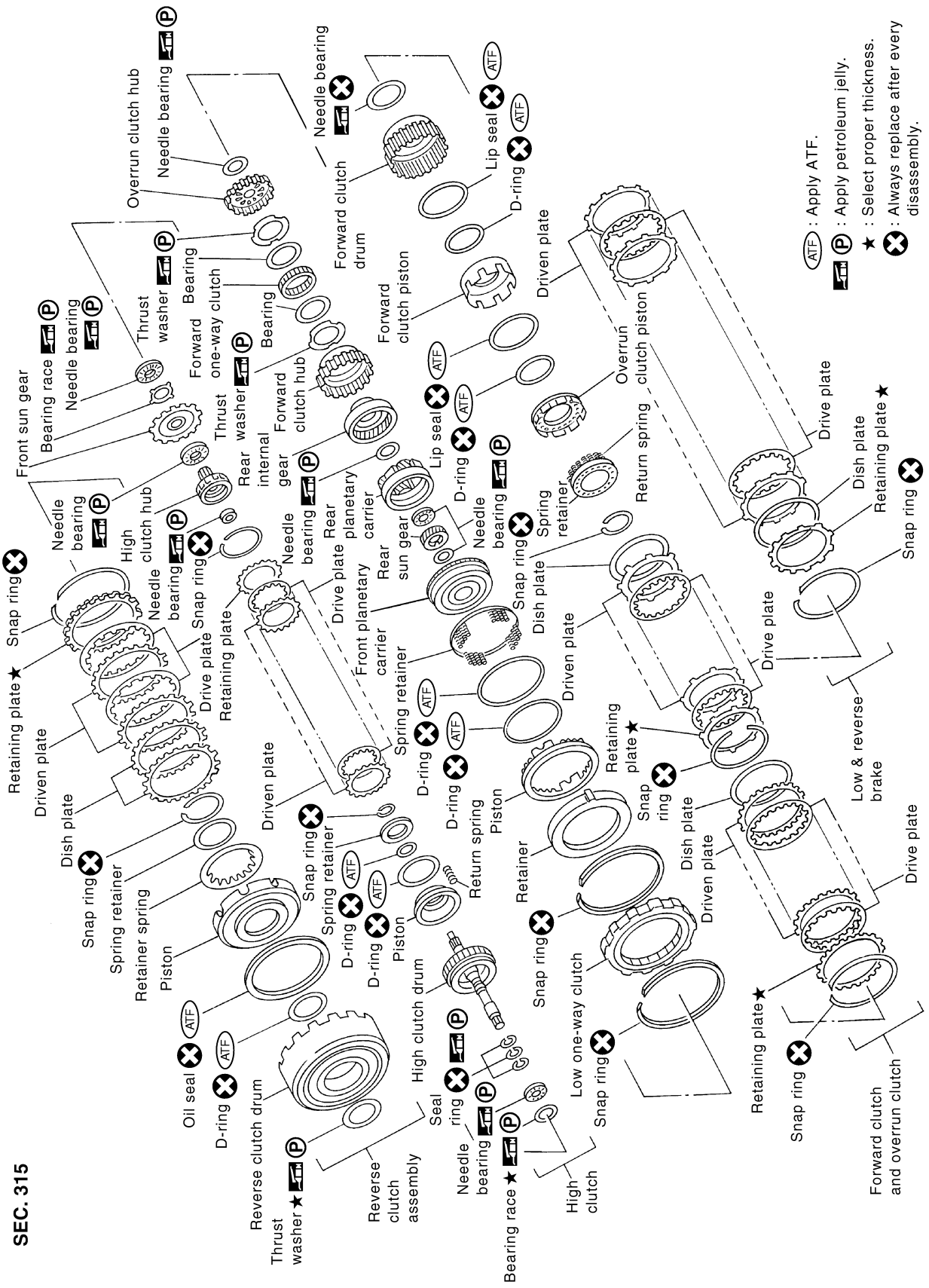
SEC. 315
Overrun clutch hub
Needle bearing
Needle bearing
Forward clutch drum
Lip seal
D-ring
Driven plate
Thrust washer
Bearing
Forward one-way clutch
Bearing
Forward clutch piston
Front sun gear
Bearing race
Needle bearing
Thrust washer
Forward clutch hub
Lip seal
D-ring
Overrun clutch piston
Return spring
Drive plate
Dish plate
Retaining plate
Snap ring
Needle bearing
High clutch hub
Needle bearing
Snap ring
Rear internal gear
Needle bearing
Rear planetary carrier
Rear sun gear
Needle bearing
Spring retainer
Snap ring
Dish plate
Drive plate
Retaining plate
Snap ring
Retaining plate
Driven plate
Drive plate
Front planetary carrier
Spring retainer
Driven plate
Dish plate
Driven plate
D-ring
D-ring
Piston
Return spring
Retaining plate
Snap ring
Dish plate
Driven plate
Drive plate
Low & reverse brake
Snap ring
Spring retainer
Retainer spring
Piston
Snap ring
Spring retainer
D-ring
D-ring
Piston
Retainer
Snap ring
Low one-way clutch
Snap ring
Retaining plate
Snap ring
Forward clutch and overrun clutch
Oil seal
D-ring
Reverse clutch drum
Thrust washer
Reverse clutch assembly
High clutch drum
Seal ring
Needle bearing
Bearing race
High clutch
ATF : Apply ATF.
P : Apply petroleum jelly.
★ : Select proper thickness.
✕ : Always replace after every disassembly.

SAT834K

Components (Cont'd)

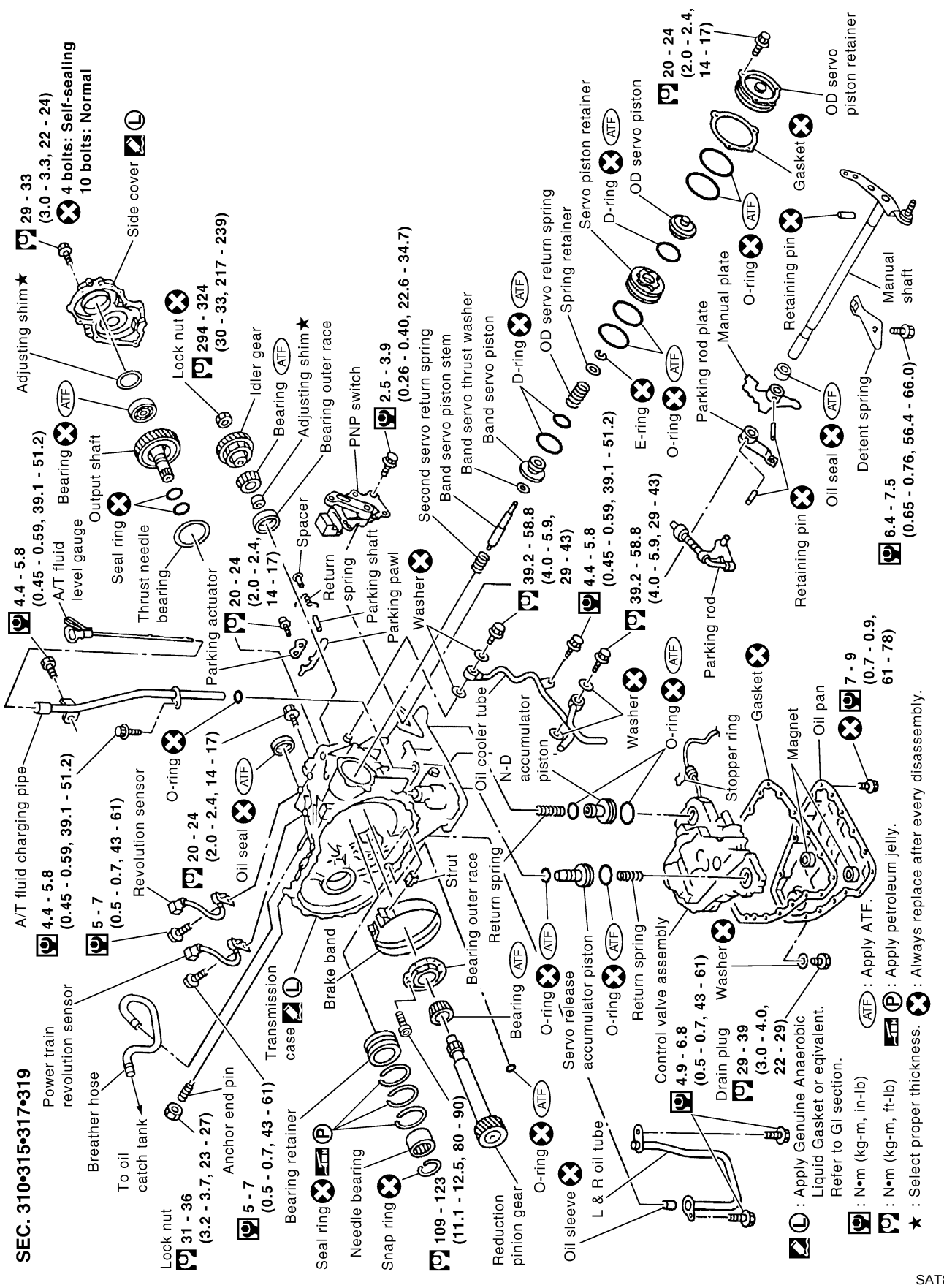

Oil Channel

NHAT0122

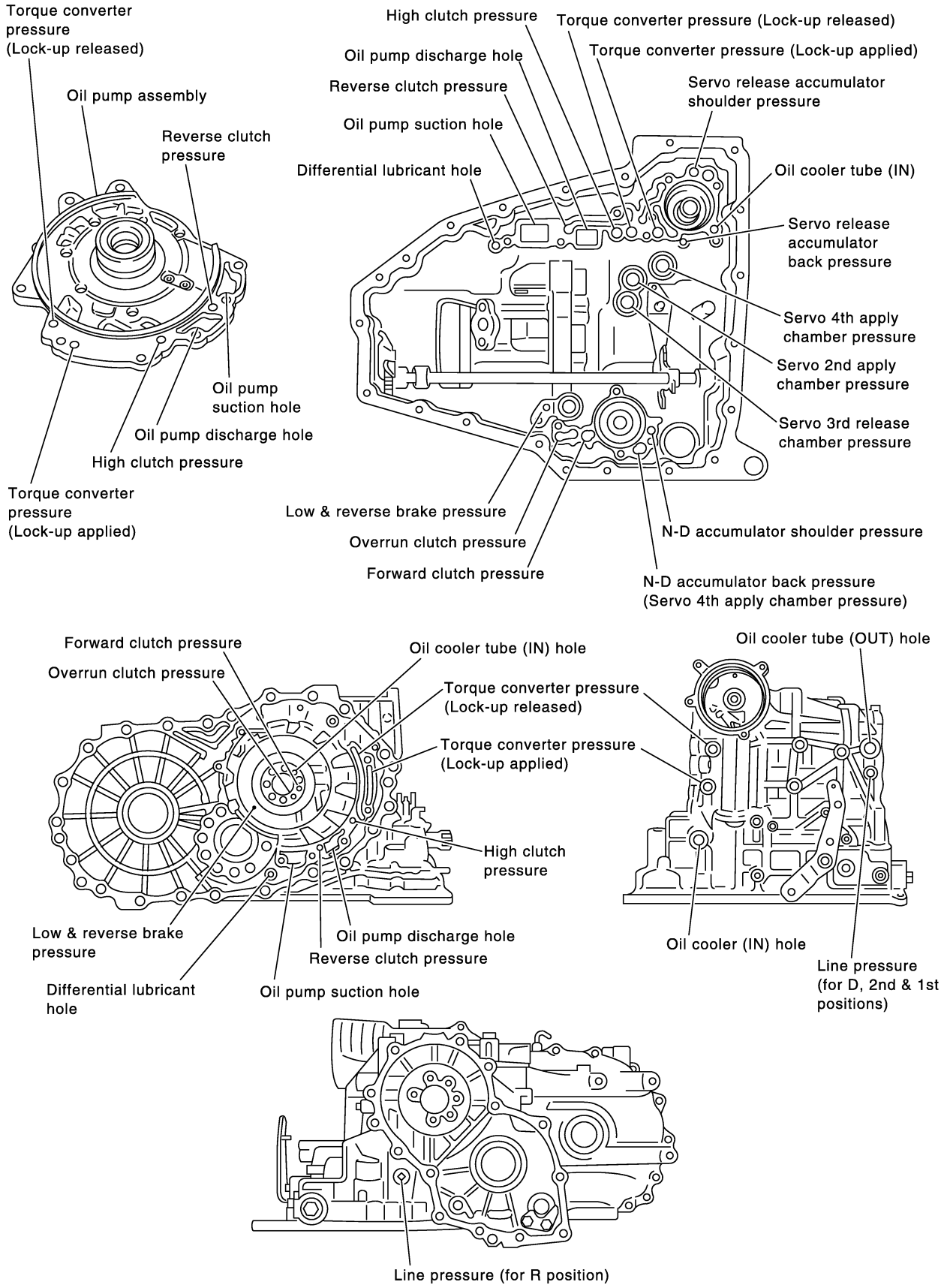

SAT573K

Locations of Adjusting Shims, Needle Bearings, Thrust Washers and Snap Rings

NHAT0123

Outer diameter of thrust washers

Item number	Outer diameter mm (in)	Parts number*
Ⓙ★	76.0 (2.992)	31508 80X13 - 31508 80X20
Ⓚ★	80.0 (3.150)	31438 80X60 - 31438 80X70

Outer and inner diameter of needle bearings

Item number	Outer diameter mm (in)	Inner diameter mm (in)	Parts number*
Ⓐ	50.0 (1.969)	35.1 (1.382)	31407 80X10
Ⓑ	42.0 (1.654)	23.7 (0.933)	31407 80X01
Ⓒ	70.0 (2.756)	50.0 (1.969)	31407 80X09
Ⓓ	51.0 (2.008)	33.1 (1.303)	31407 80X02
Ⓔ	48.0 (1.890)	30.0 (1.181)	31407 80X03
Ⓕ	50.0 (1.969)	35.1 (1.382)	31407 80X10
Ⓖ	56.5 (2.224)	38.5 (1.516)	31407 80X08
Ⓗ	87.0 (3.425)	69.0 (2.717)	31407 80X07
Ⓘ	108.0 (4.252)	85.15 (3.3524)	31407 80X06

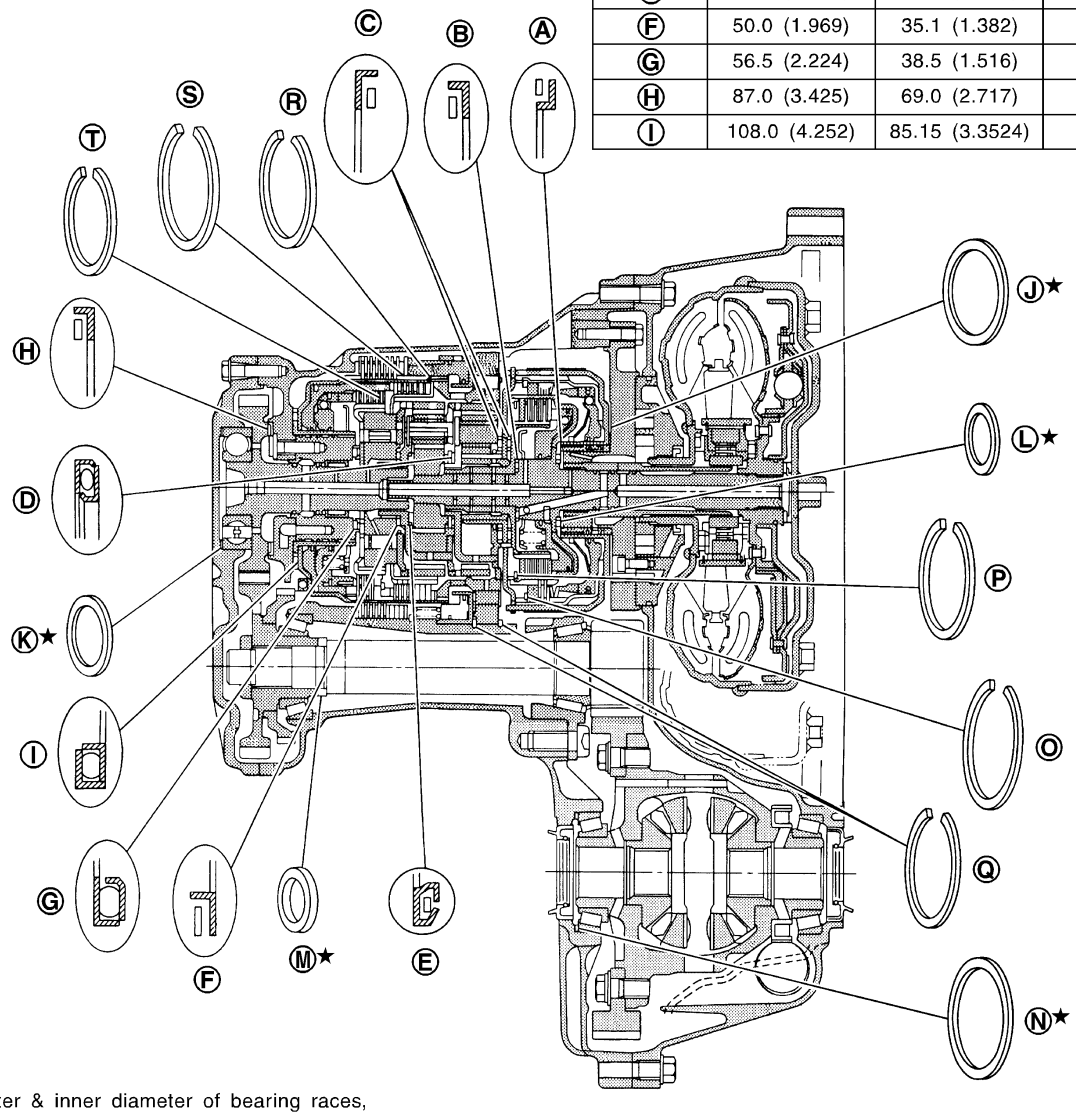

Outer & inner diameter of bearing races, adjusting shims and adjusting spacer

Item number	Outer diameter mm (in)	Inner diameter mm (in)	Parts number*
Ⓛ★	51.0 (2.008)	36.0 (1.417)	31435 80X00 - 31439 80X14
Ⓜ★	38.0 (1.496)	28.1 (1.106)	31439 85X01 - 31439 85X06 31439 83X11 - 31439 83X24 31439 81X00 - 31439 81X24 31439 81X46 - 31439 81X49 31439 81X60 - 31439 81X74
Ⓝ★	75.0 (2.953)	67.0 (2.638)	31438 80X00 - 31439 80X11

★ : Select proper thickness.

* : Always check with the Parts Department for the latest parts information.

Outer diameter of snap rings

Item number	Outer diameter mm (in)	Parts number*
Ⓞ	150 (5.91)	31506 80X13
Ⓟ	119.1 (4.689)	31506 80X06
Ⓠ	182.8 (7.197)	31506 80X08
Ⓡ	144.8 (5.701)	31506 80X03
Ⓢ	173.8 (6.843)	31506 80X09
Ⓣ	133.9 (5.272)	31506 80X01

SAT565K

DISASSEMBLY

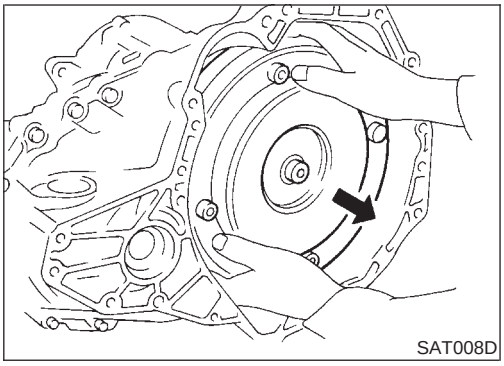

1. Drain ATF through drain plug.
2. Remove torque converter.

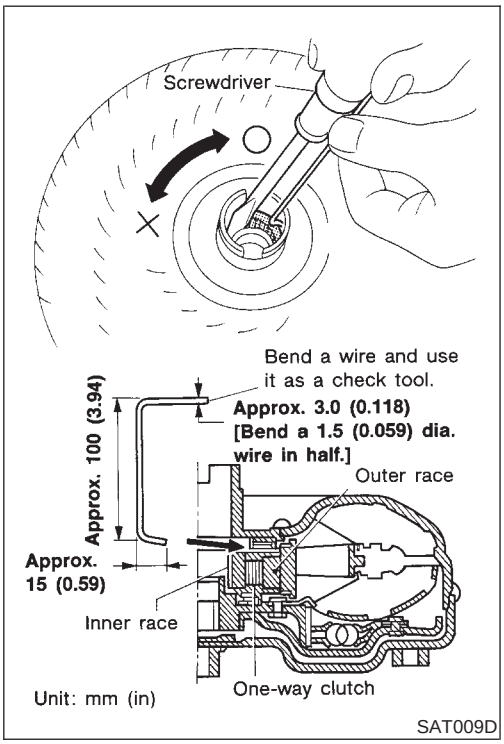

3. Check torque converter one-way clutch using check tool as shown at left.
   a. Insert check tool into the groove of bearing support built into one-way clutch outer race.
   b. When fixing bearing support with check tool, rotate one-way clutch spline using screwdriver.
   c. Check that inner race rotates clockwise only. If not, replace torque converter assembly.

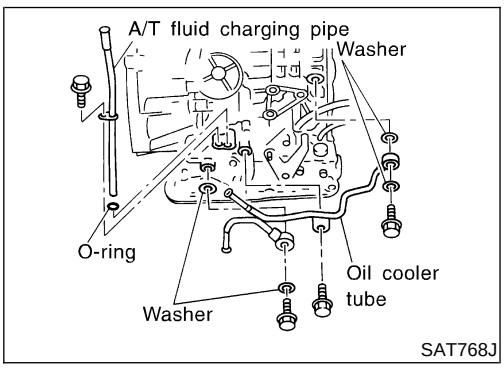

4. Remove A/T fluid charging pipe and fluid cooler tube.

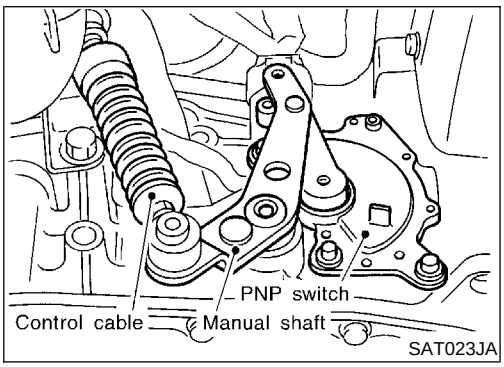

5. Set manual shaft to position P.
6. Remove park/neutral position (PNP) switch.

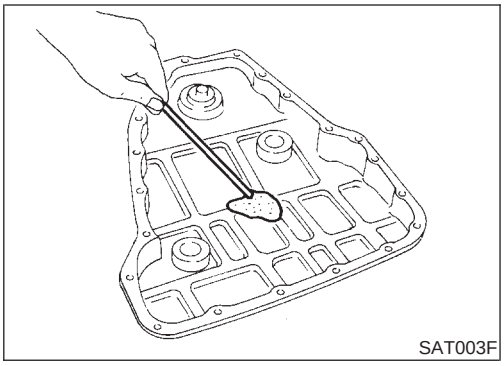
SAT003F

7. Remove oil pan and oil pan gasket.
- **Do not reuse oil pan bolts.**
8. Check foreign materials in oil pan to help determine causes of malfunction. If the fluid is very dark, smells burned, or contains foreign particles, the frictional material (clutches, band) may need replacement. A tacky film that will not wipe clean indicates varnish build up. Varnish can cause valves, servo, and clutches to stick and can inhibit pump pressure.
- **If frictional material is detected, replace radiator after repair of A/T. Refer to LC-20, "Radiator".**

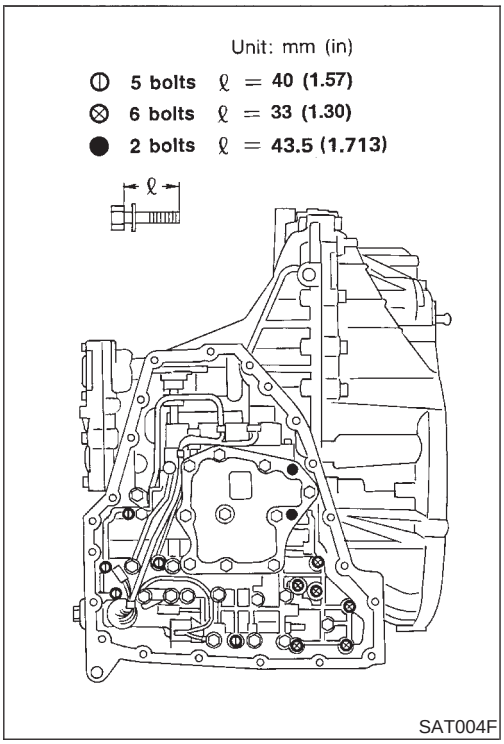

SAT004F

9. Remove control valve assembly according to the following procedures.

a. Remove control valve assembly mounting bolts **I**, **X** and ●.

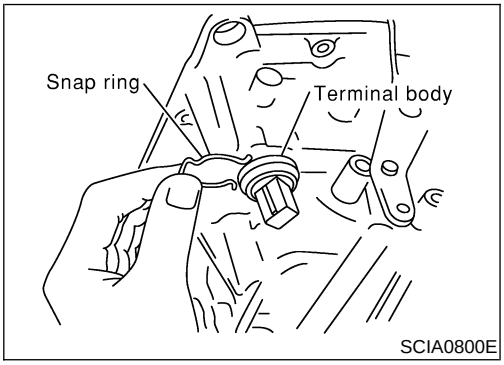

SCIA0800E

b. Remove snap ring from terminal body.

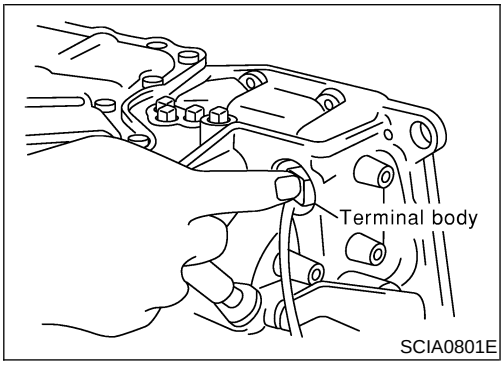

SCIA0801E

c. Push terminal body into transmission case and draw out solenoid harness.

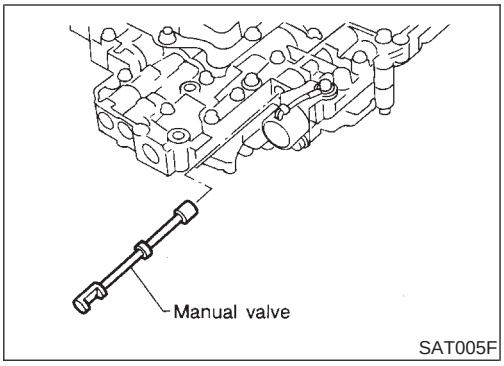

10. Remove manual valve from control valve assembly.

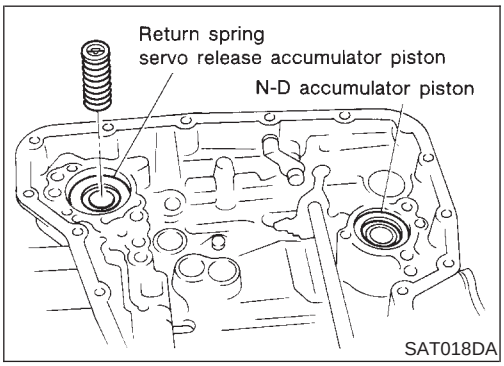

11. Remove return spring from servo release accumulator piston.

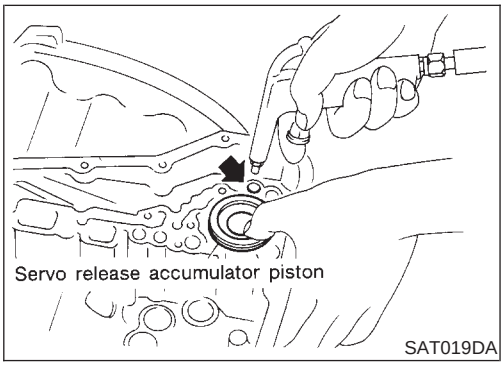

12. Remove servo release accumulator piston with compressed air.
13. Remove O-rings from servo release accumulator piston.

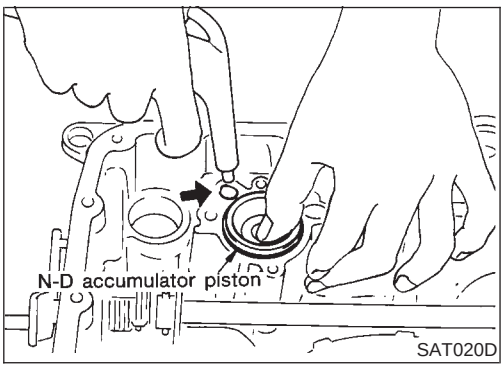

14. Remove N-D accumulator piston and return spring with compressed air.
15. Remove O-rings from N-D accumulator piston.

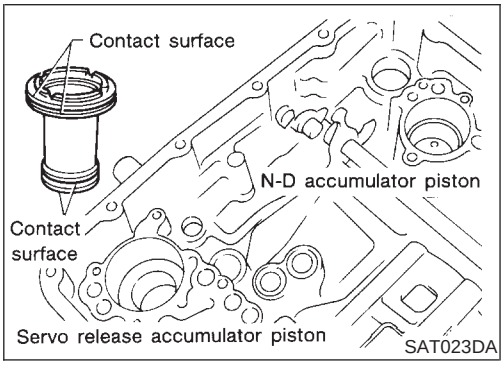

16. Check accumulator pistons and contact surface of transmission case for damage.
17. Check accumulator return springs for damage and free length.

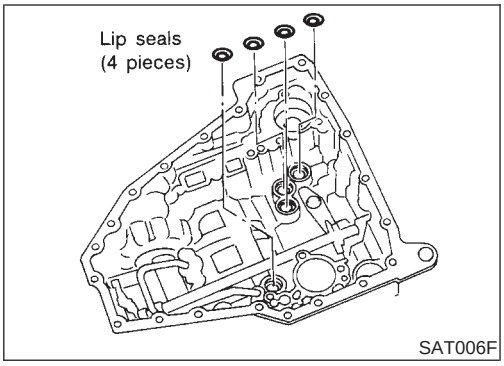

18. Remove lip seals.

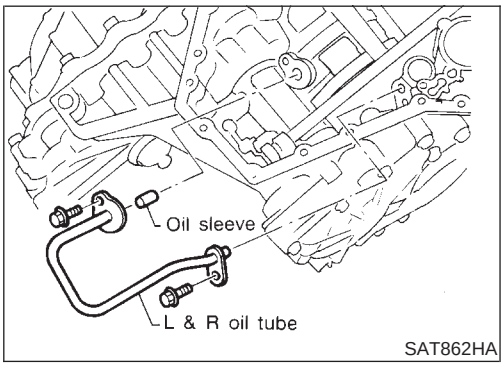

19. Remove L & R oil tube and oil sleeve.

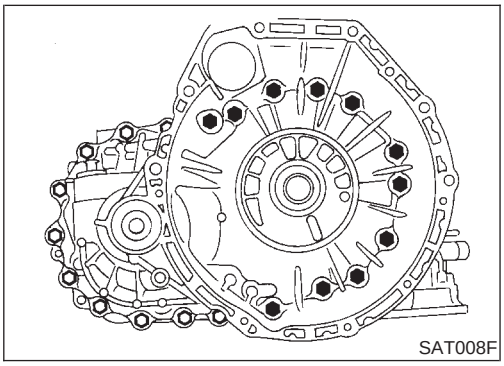

20. Remove converter housing according to the following procedures.
a. Remove converter housing mounting bolts.
b. Remove converter housing by tapping it lightly.

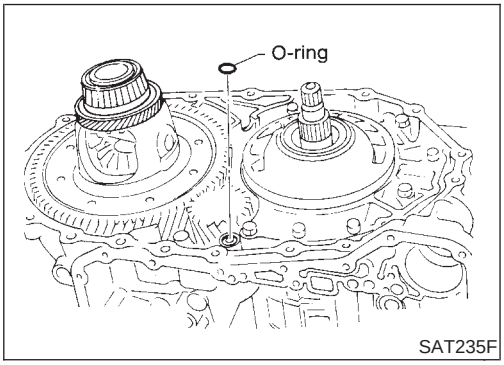

c. Remove O-ring from differential oil port.

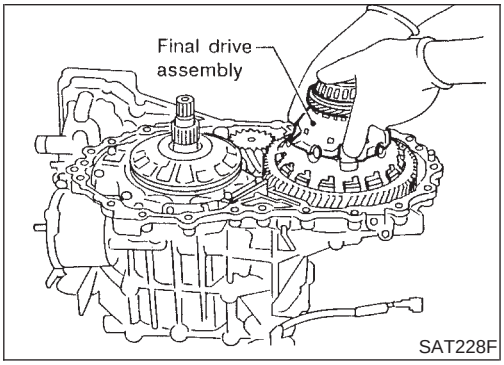

21. Remove final drive assembly from transmission case.

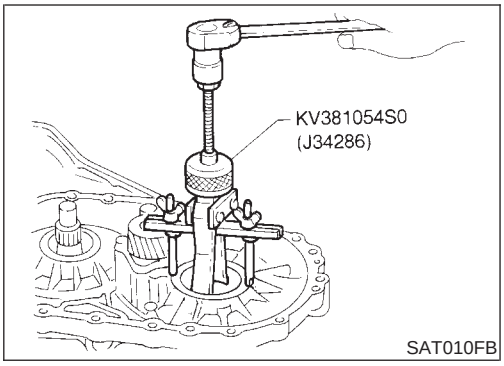

22. Remove differential side bearing outer race and side bearing adjusting shim from transmission case.

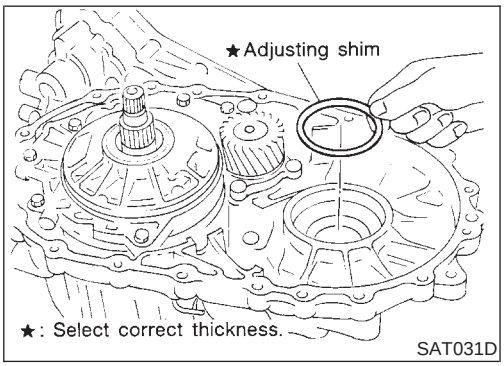

23. Remove differential side bearing adjusting shim from transmission case.

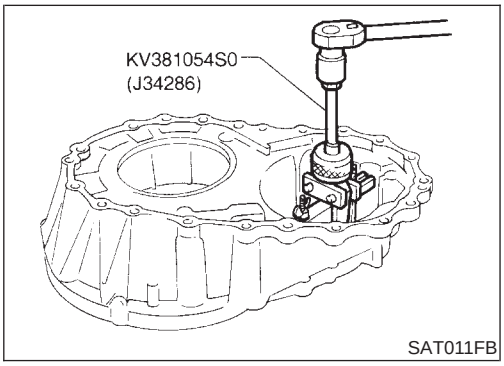

24. Remove differential side bearing outer race from converter housing.

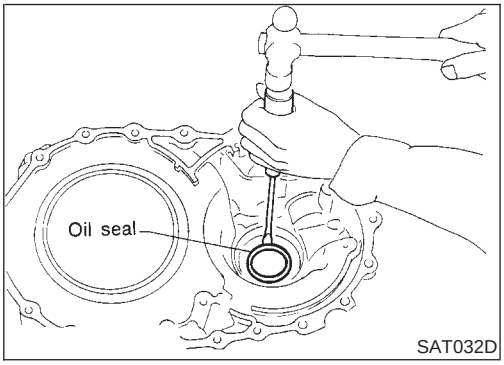

25. Remove oil seal with screwdriver from converter housing.
- **Be careful not to damage case.**

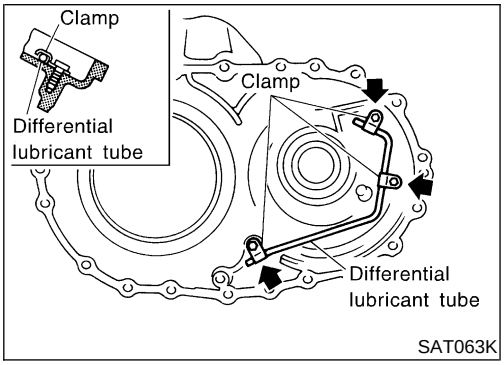

26. Remove differential lubricant tube from converter housing.

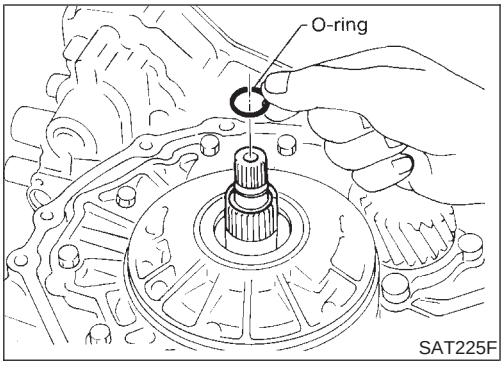

27. Remove oil pump according to the following procedures.
a. Remove O-ring from input shaft.

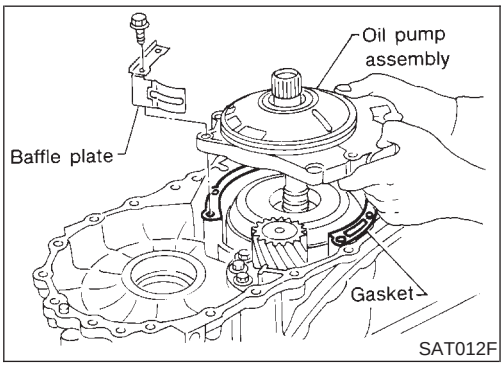

b. Remove oil pump assembly, baffle plate and gasket from transmission case.

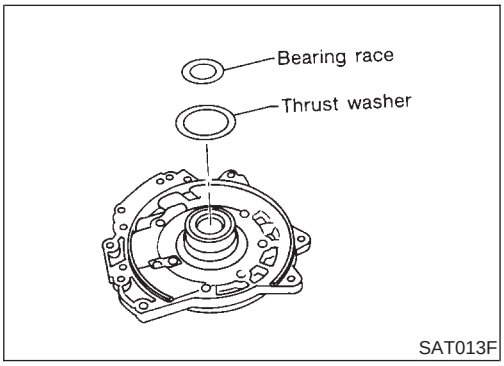

c. Remove thrust washer and bearing race from oil pump assembly.

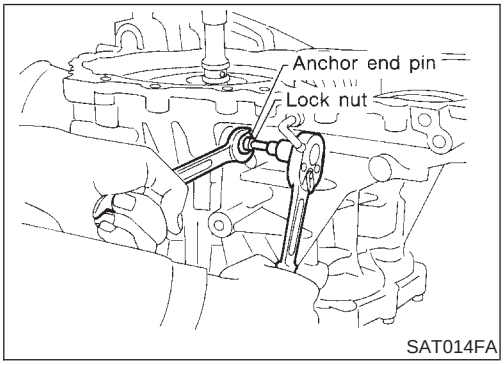

28. Remove brake band according to the following procedures.
a. Loosen lock nut, then back off anchor end pin.
- **Do not reuse anchor end pin.**

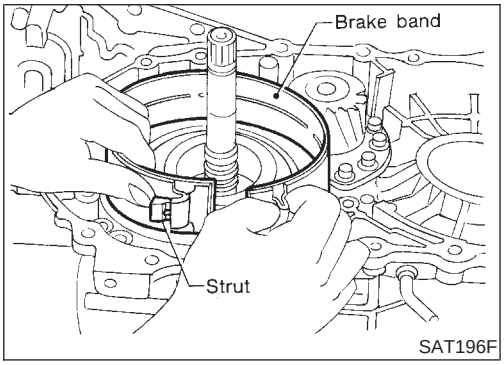

b. Remove brake band and strut from transmission case.

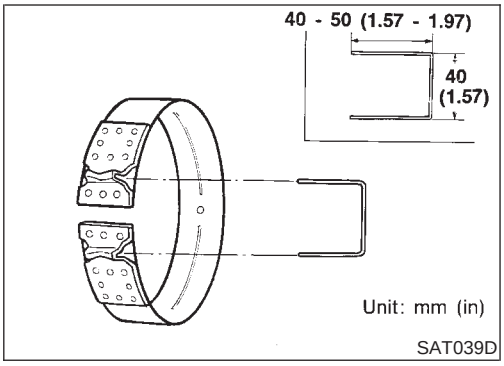

- **To prevent brake linings from cracking or peeling, do not stretch the flexible band unnecessarily. When removing the brake band, always secure it with a clip as shown in the figure at left.**
  Leave the clip in position after removing the brake band.

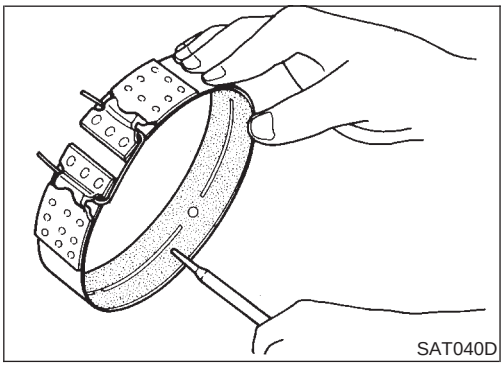

c. Check brake band facing for damage, cracks, wear or burns.

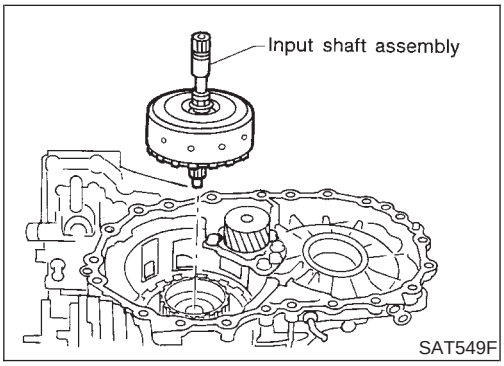

29. Remove input shaft assembly (high clutch) and reverse clutch according to the following procedures.

a. Remove input shaft assembly (high clutch) with reverse clutch.

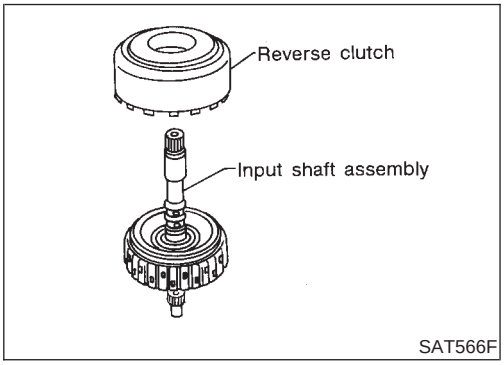

b. Remove input shaft assembly (high clutch) from reverse clutch.

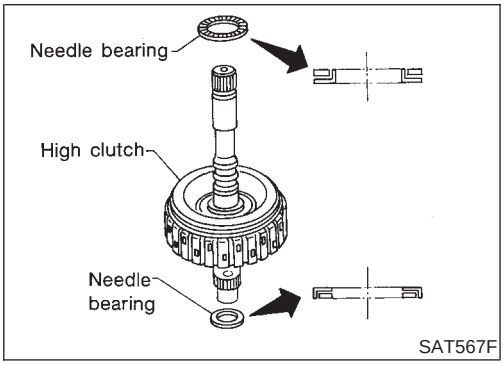

c. Remove needle bearings from high clutch drum and check for damage or wear.

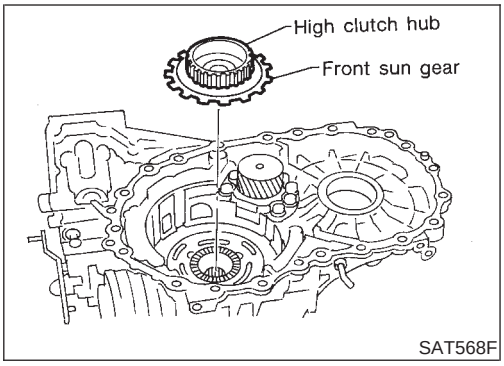

d. Remove high clutch hub and front sun gear from transmission case.

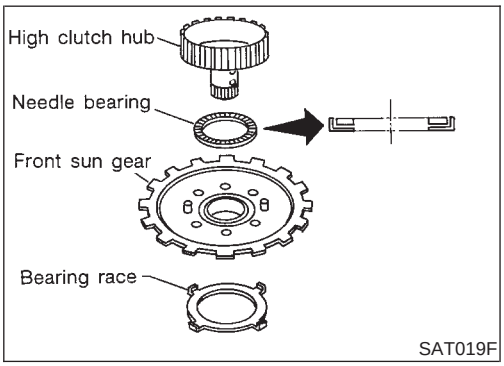

e. Remove front sun gear and needle bearing from high clutch hub and check for damage or wear.

f. Remove bearing race from front sun gear and check for damage or wear.

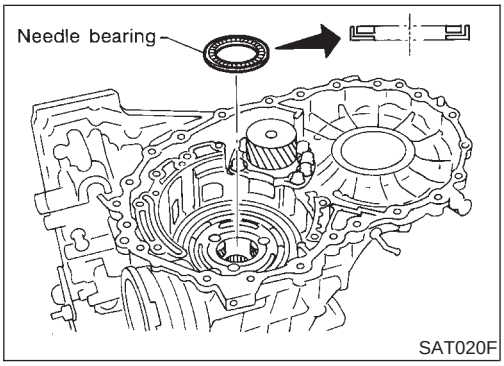

30. Remove needle bearing from transmission case and check for damage or wear.

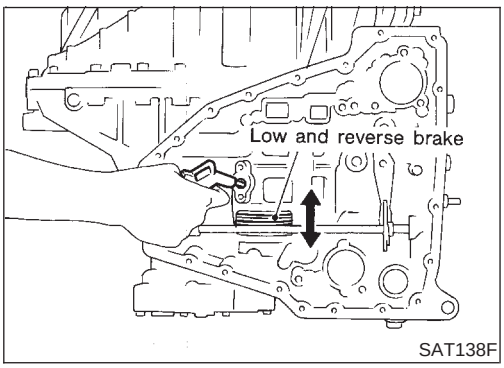

31. Apply compressed air and check to see that low and reverse brake operates.

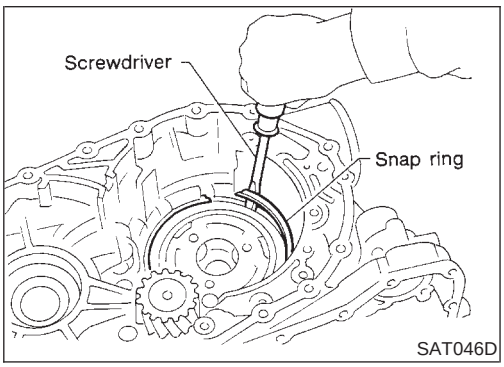

32. Remove low one-way clutch and front planetary carrier assembly according to the following procedures.

a. Remove snap ring with flat-bladed screwdriver.

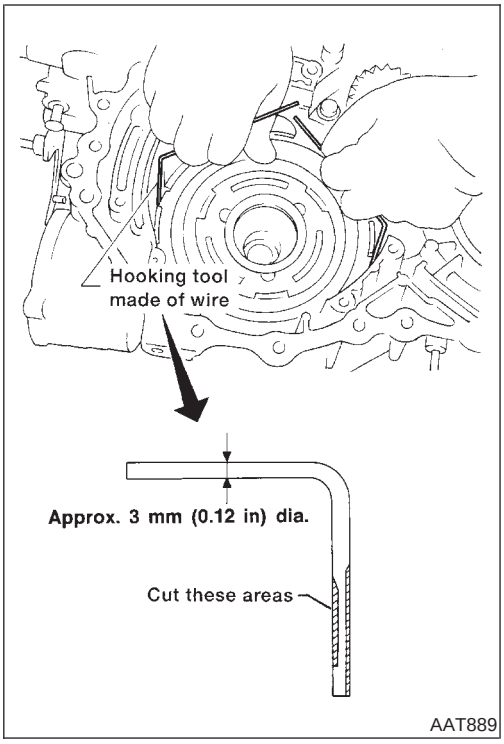

b. Remove low one-way clutch with a hook made of wire.

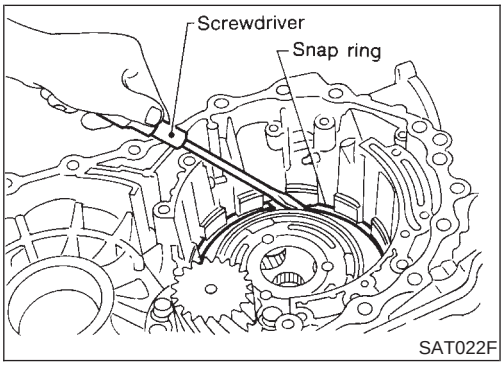

c. Remove snap ring with flat-bladed screwdriver.

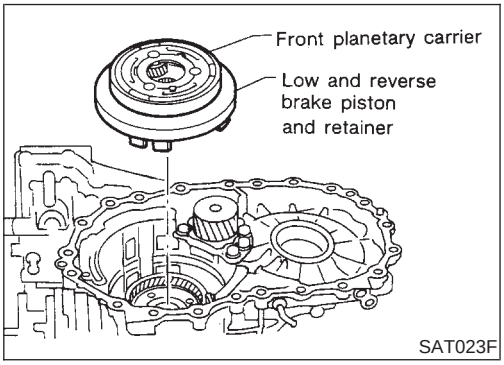

d. Remove front planetary carrier with low and reverse brake piston and retainer.

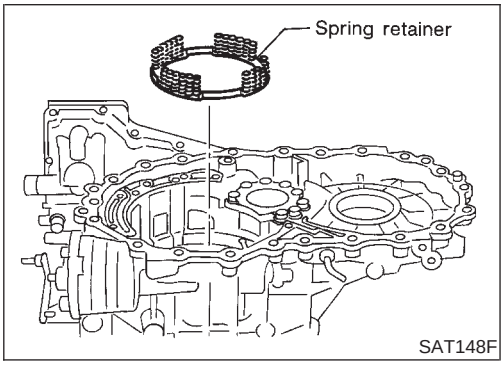

e. Remove low and reverse brake spring retainer.

- **Do not remove return springs from spring retainer.**

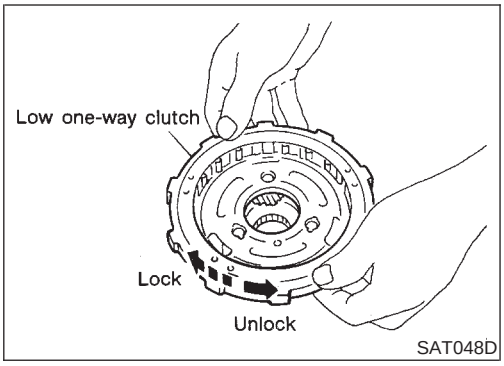

f. Check that low one-way clutch rotates in the direction of the arrow and locks in the opposite direction.

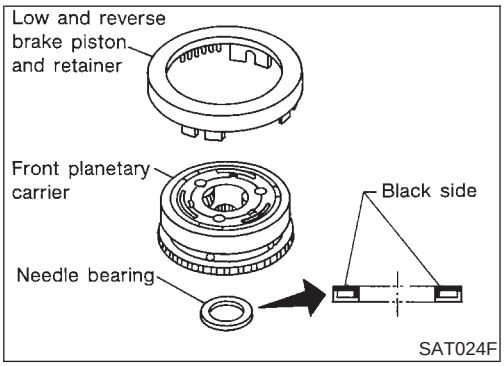

g. Remove needle bearing, low and reverse brake piston and retainer from front planetary carrier.

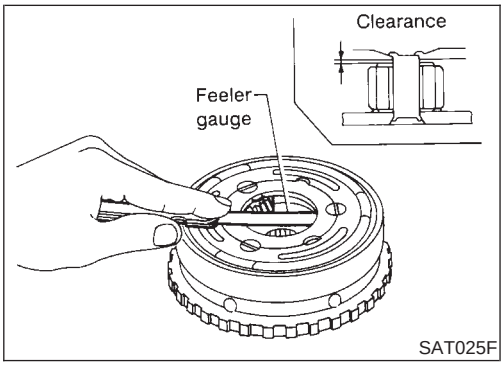

h. Check front planetary carrier, low one-way clutch and needle bearing for damage or wear.

i. Check clearance between planetary gears and planetary carrier with feeler gauge.

Standard clearance:

0.20 - 0.70 mm (0.0079 - 0.0276 in)

Allowable limit:

0.80 mm (0.0315 in)

Replace front planetary carrier if the clearance exceeds allowable limit.

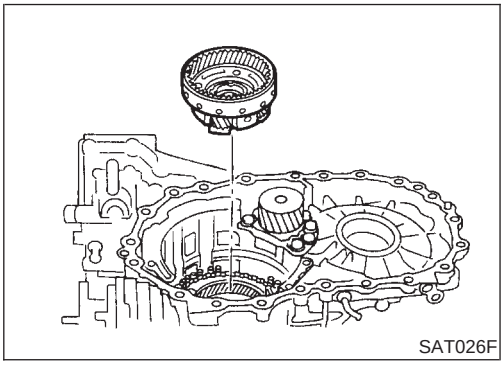

33. Remove rear planetary carrier assembly and rear sun gear according to the following procedures.

a. Remove rear planetary carrier assembly from transmission case.

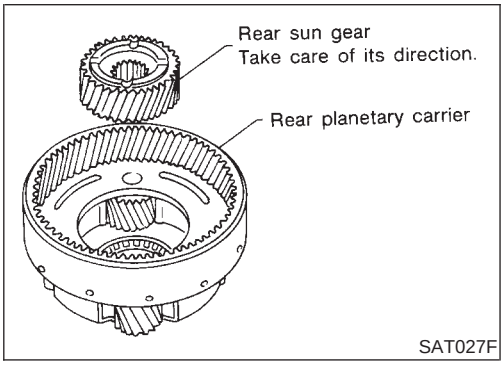

b. Remove rear sun gear from rear planetary carrier.

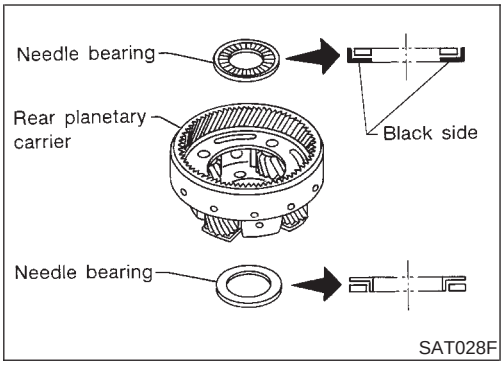

c. Remove needle bearings from rear planetary carrier assembly.

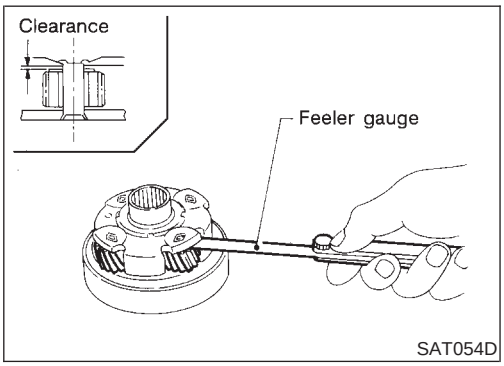

d. Check rear planetary carrier, rear sun gear and needle bearings for damage or wear.

e. Check clearance between pinion washer and rear planetary carrier with feeler gauge.

Standard clearance:

0.20 - 0.70 mm (0.0079 - 0.0276 in)

Allowable limit:

0.80 mm (0.0315 in)

Replace rear planetary carrier if the clearance exceeds allowable limit.

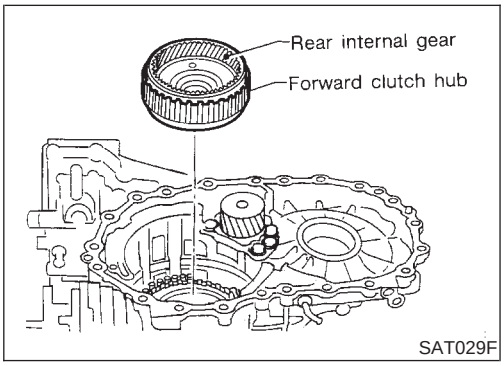

34. Remove rear internal gear and forward clutch hub from transmission case.

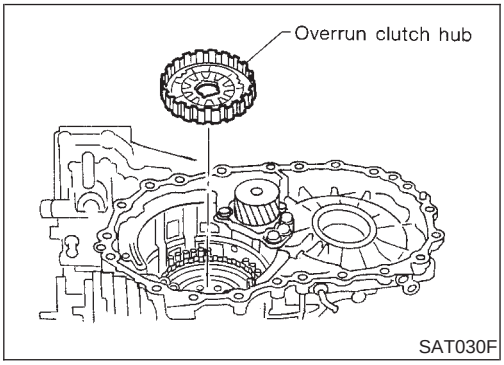

35. Remove overrun clutch hub from transmission case.

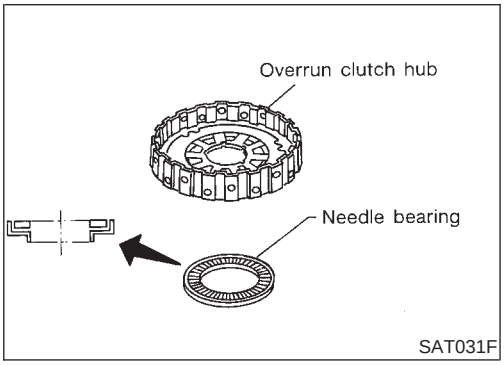

36. Remove needle bearing from overrun clutch hub and check for damage or wear.

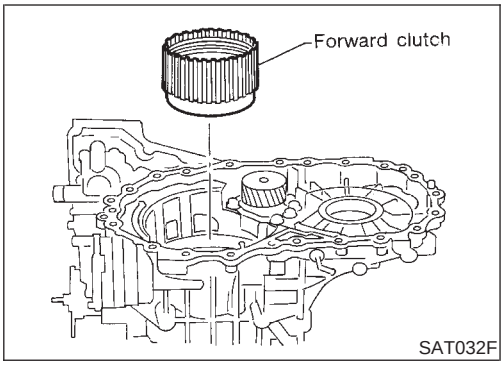

37. Remove forward clutch assembly from transmission case.

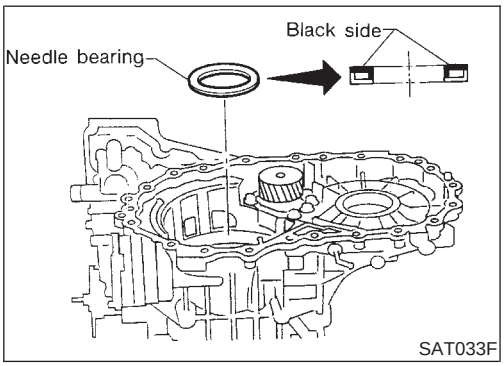

38. Remove needle bearing from transmission case.

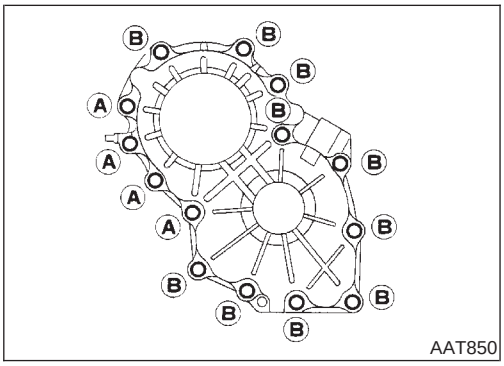

39. Remove output shaft assembly according to the following procedures.

a. Remove side cover bolts.

- **Do not mix bolts A and B.**
- **Always replace bolts A as they are self-sealing bolts.**

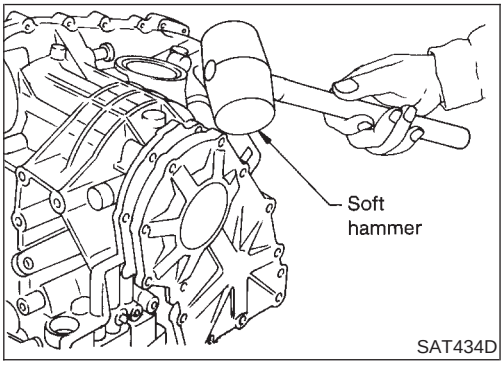

b. Remove side cover by lightly tapping it with a soft hammer.

- **Be careful not to drop output shaft assembly. It might come out when removing side cover.**

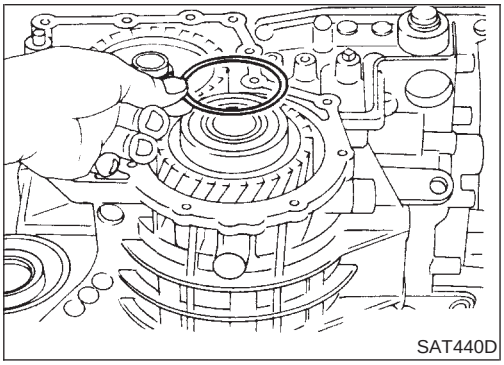

c. Remove adjusting shim.

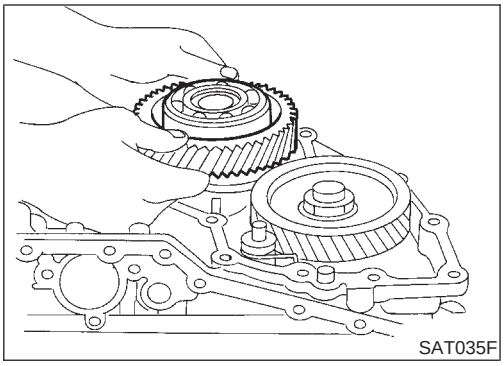
SAT035F

d. Remove output shaft assembly.

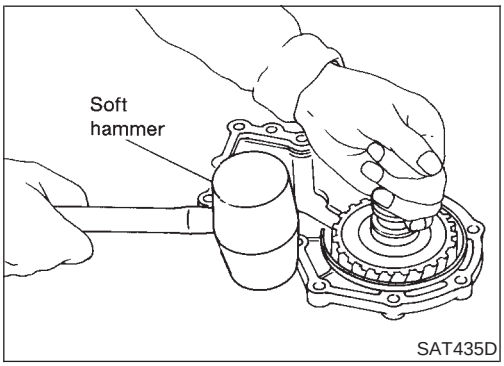

SAT435D

- If output shaft assembly comes off with side cover, tap cover with a soft hammer to separate.

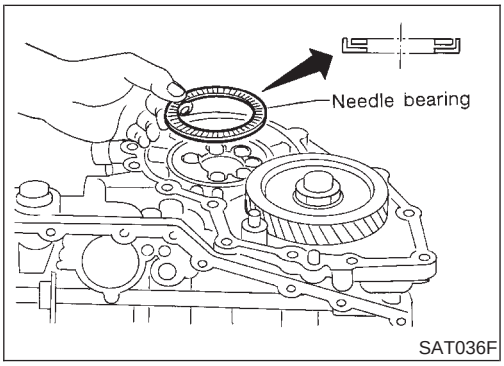

SAT036F

e. Remove needle bearing.

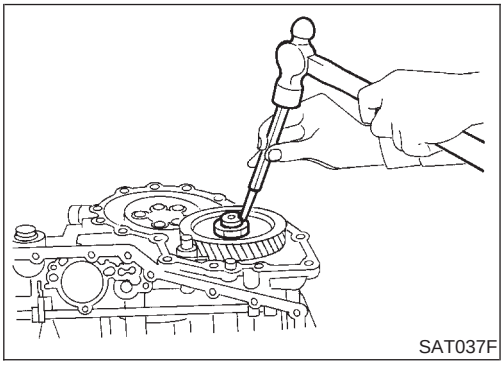
SAT037F

40. Disassemble reduction pinion gear according to the following procedures.
a. Set manual shaft to position P to fix idler gear.
b. Unlock idler gear lock nut using a pin punch.

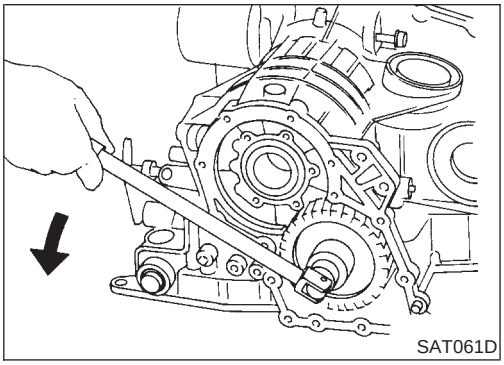
SAT061D

c. Remove idler gear lock nut.
- **Do not reuse idler gear lock nut.**

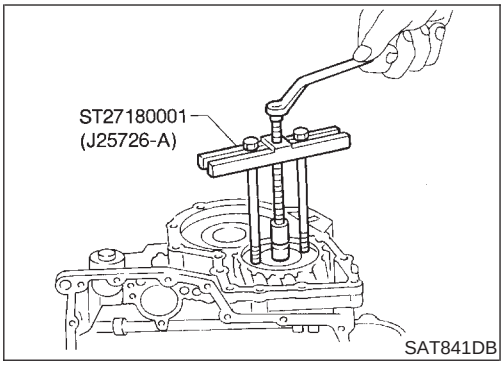

d. Remove idler gear with puller.

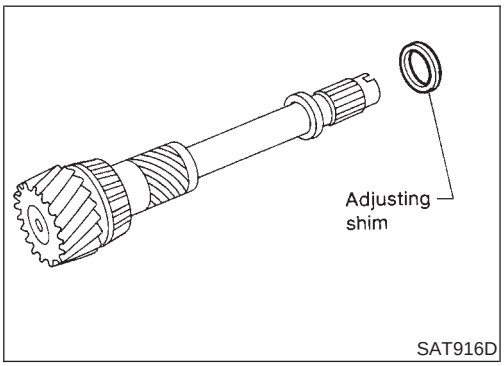

e. Remove reduction pinion gear.
f. Remove adjusting shim from reduction pinion gear.

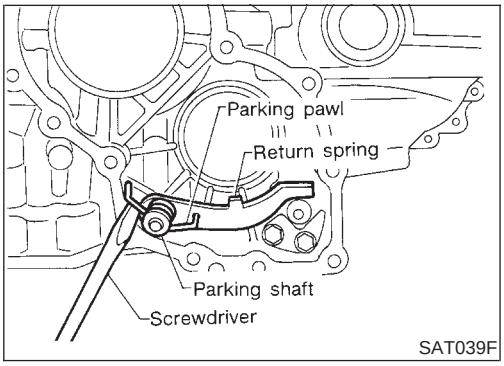

41. Remove return spring from parking shaft with screwdriver.
42. Draw out parking shaft and remove parking pawl from transmission case.
43. Check parking pawl and shaft for damage or wear.

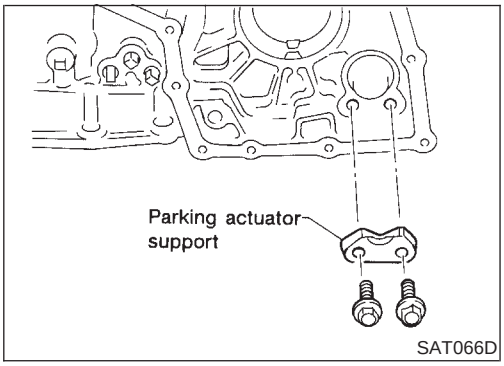

44. Remove parking actuator support from transmission case.
45. Check parking actuator support for damage or wear.

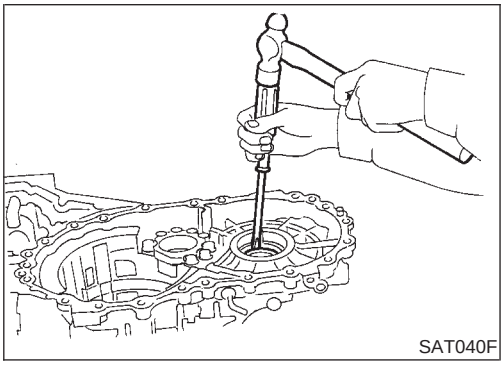

46. Remove side oil seal with screwdriver from transmission case.

Manual Shaft

COMPONENTS

NHAT0125

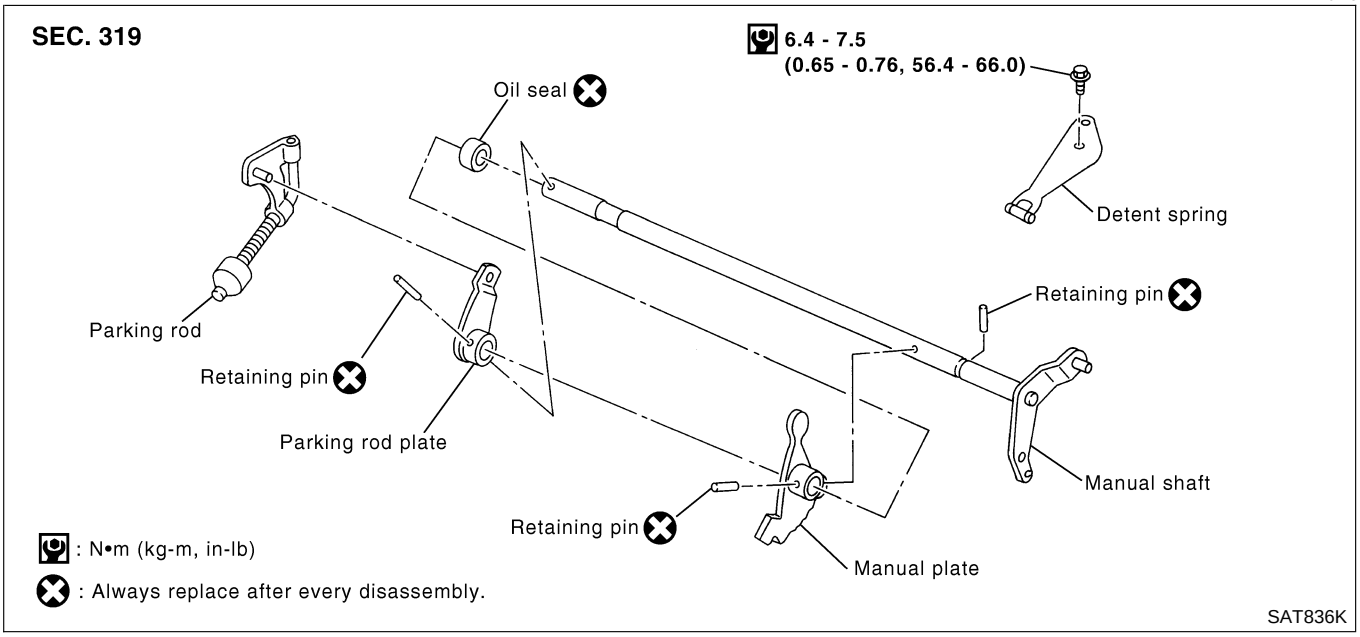

REMOVAL

NHAT0126

1. Remove detent spring from transmission case.

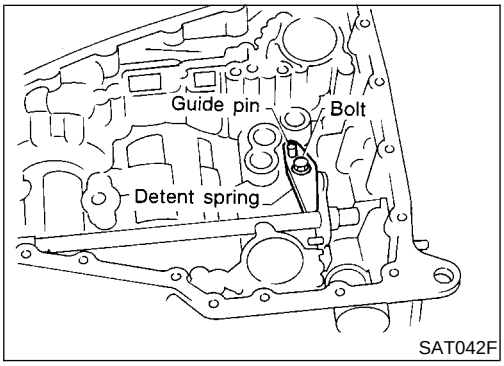

2. Drive out manual plate retaining pin.

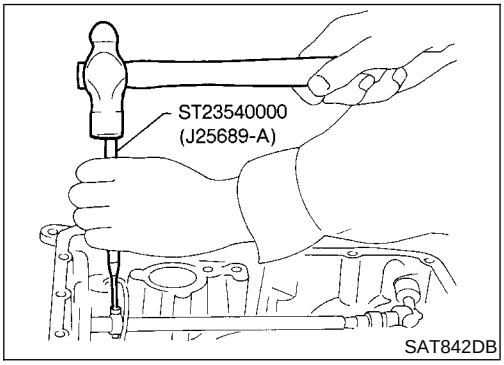

3. Drive and pull out parking rod plate retaining pin.
4. Remove parking rod plate from manual shaft.
5. Draw out parking rod from transmission case.

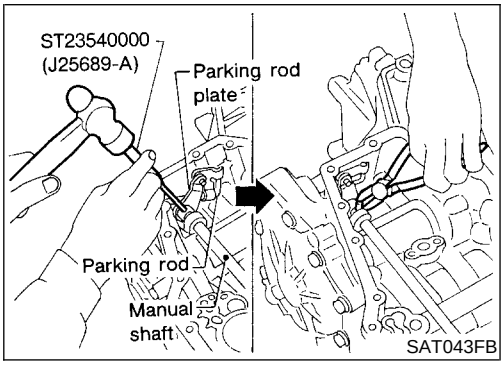

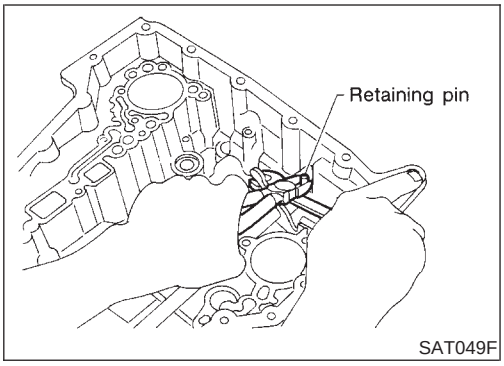

SAT049F

6. Pull out manual shaft retaining pin.
7. Remove manual shaft and manual plate from transmission case.

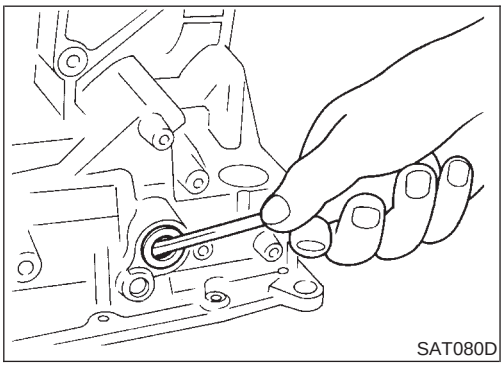
SAT080D

8. Remove manual shaft oil seal.

INSPECTION

NHAT0127

- Check component parts for wear or damage. Replace if necessary.

INSTALLATION

NHAT0128

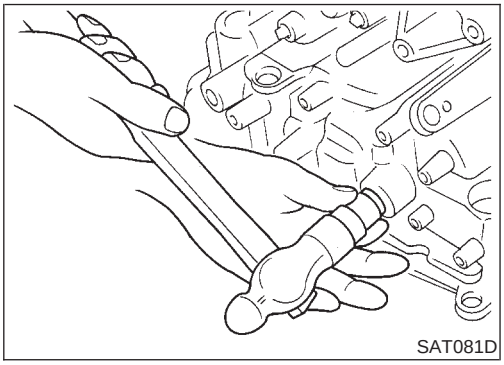
SAT081D

1. Install manual shaft oil seal.
- **Apply ATF to outer surface of oil seal.**

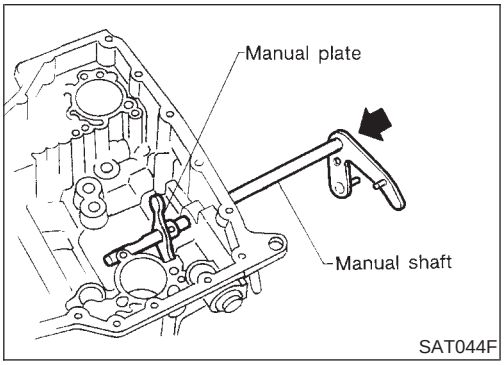

SAT044F

2. Install manual shaft and manual plate.

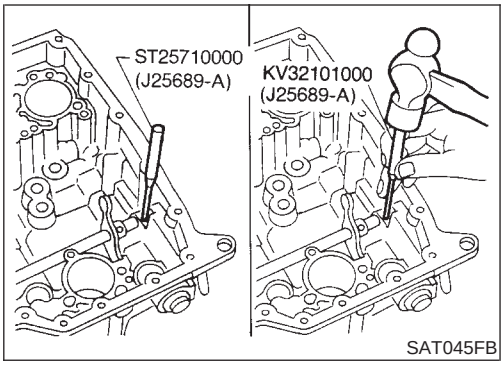

SAT045FB

3. Align groove of manual shaft and hole of transmission case.
4. Install manual shaft retaining pin up to bottom of hole.

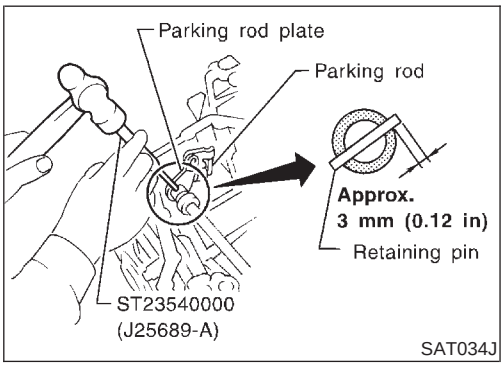

SAT034J

5. Install parking rod to parking rod plate.
6. Set parking rod assembly onto manual shaft and drive retaining pin.
- **Both ends of pin should protrude.**

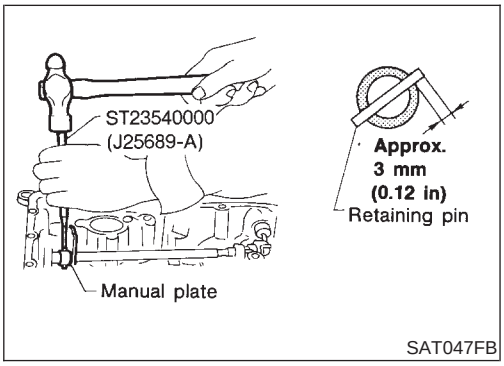

SAT047FB

7. Drive manual plate retaining pin.
- **Both ends of pin should protrude.**

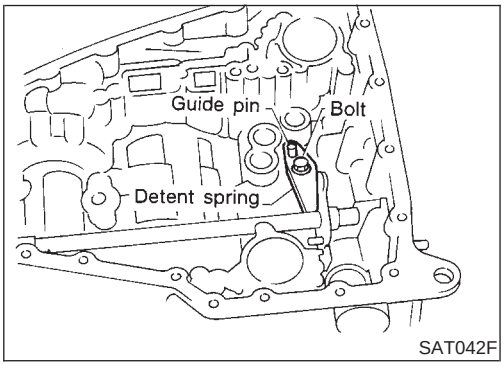

SAT042F

8. Install detent spring. Tighten detent spring bolts to the specified torque. Refer to AT-307.

Oil Pump

COMPONENTS

NHAT0129

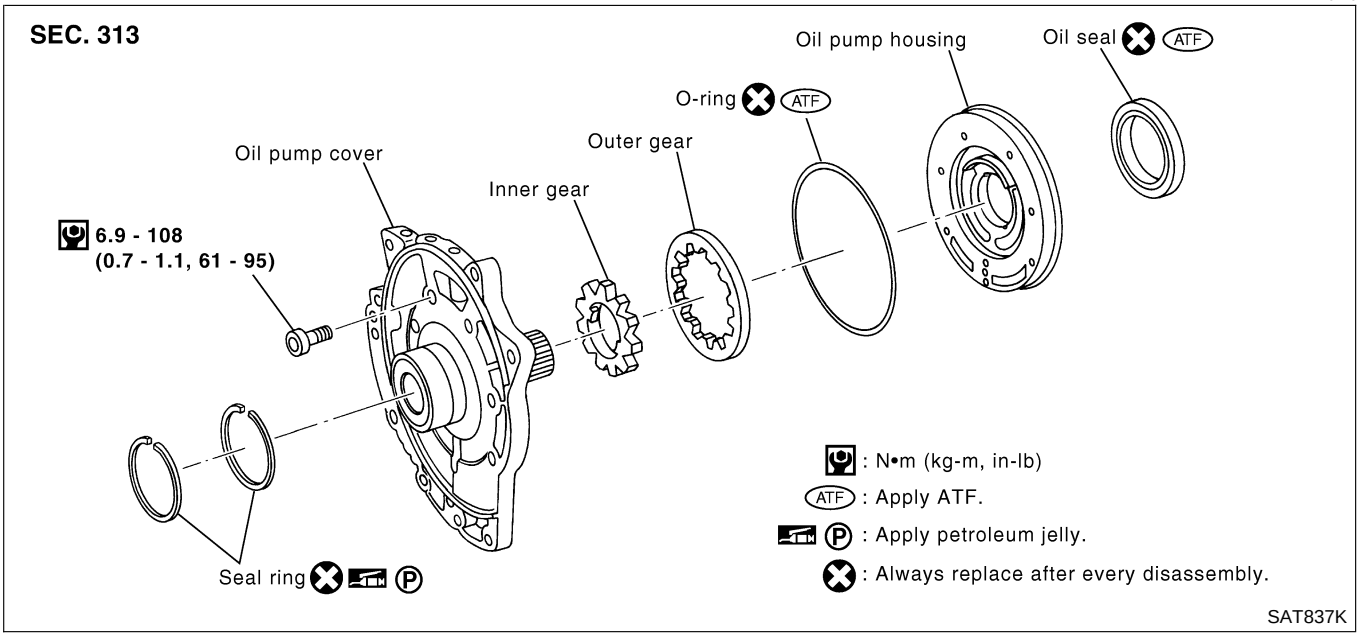

DISASSEMBLY

NHAT0130

1. Remove seal rings.

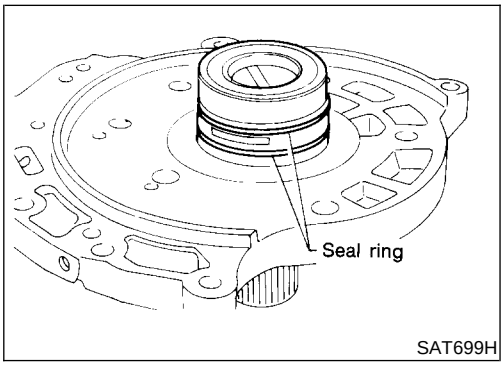

2. Loosen bolts in a crisscross pattern and remove oil pump cover.

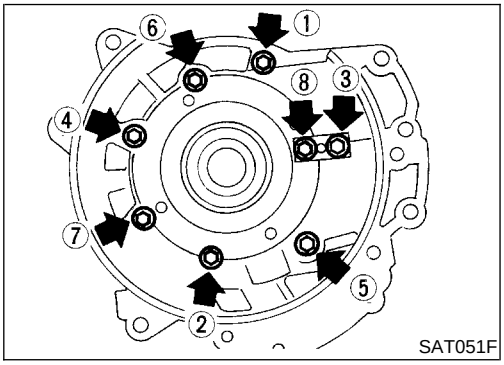

3. Remove inner and outer gear from oil pump housing.

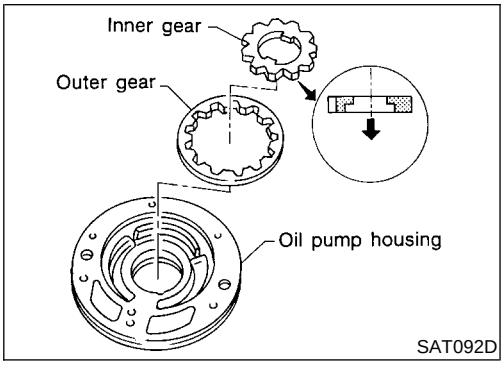

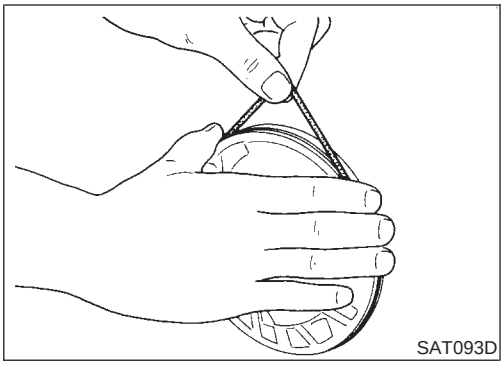
SAT093D

4. Remove O-ring from oil pump housing.

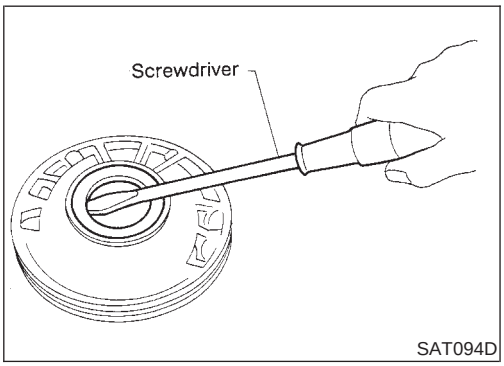

SAT094D

5. Remove oil pump housing oil seal.

INSPECTION

NHAT0131

Oil Pump Housing, Oil Pump Cover, Inner Gear and Outer Gear

NHAT0131S01

- Check for wear or damage.

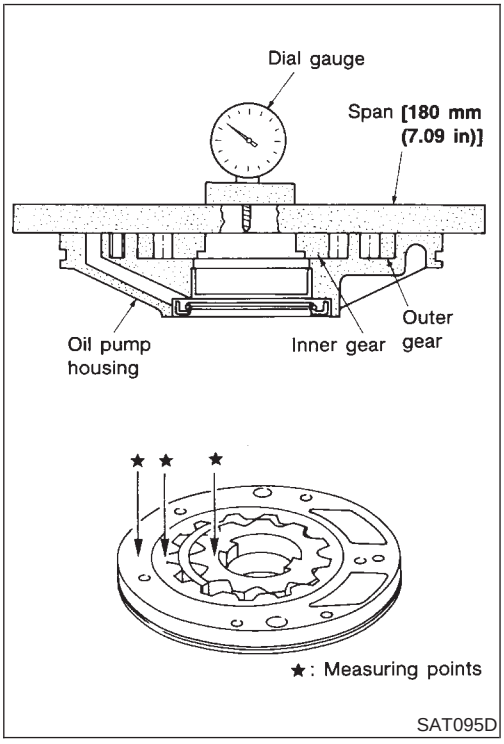

SAT095D

Side Clearances

NHAT0131S02

- Measure side clearance of inner and outer gears in at least four places around each outside edge. Maximum measured values should be within specified positions.

  Standard clearance:

  0.030 - 0.050 mm (0.0012 - 0.0020 in)

- If clearance is less than standard, select inner and outer gear as a set so that clearance is within specifications.

  Inner and outer gear:

  Refer to SDS, AT-387.

- If clearance is more than standard, replace whole oil pump assembly except oil pump cover.

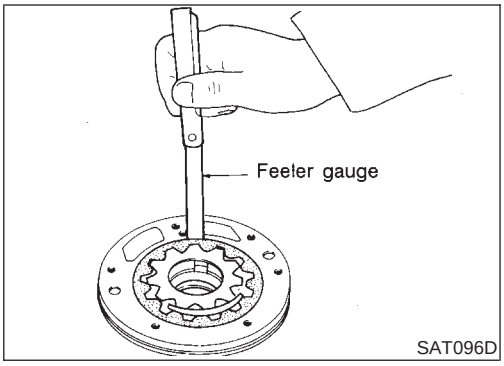

- Measure clearance between outer gear and oil pump housing.
  Standard clearance:
  0.111 - 0.181 mm (0.0044 - 0.0071 in)
  Allowable limit:
  0.181 mm (0.0071 in)
- If not within allowable limit, replace whole oil pump assembly except oil pump cover.

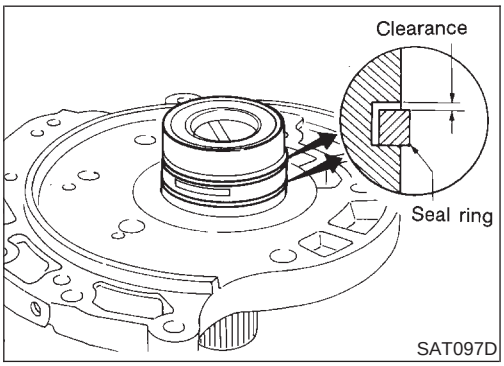

Seal Ring Clearance

NHAT0131S03

- Measure clearance between seal ring and ring groove.
  Standard clearance:
  0.1 - 0.25 mm (0.0039 - 0.0098 in)
  Allowable limit:
  0.25 mm (0.0098 in)
- If not within allowable limit, replace oil pump cover assembly.

ASSEMBLY

NHAT0132

1. Install oil seal on oil pump housing.

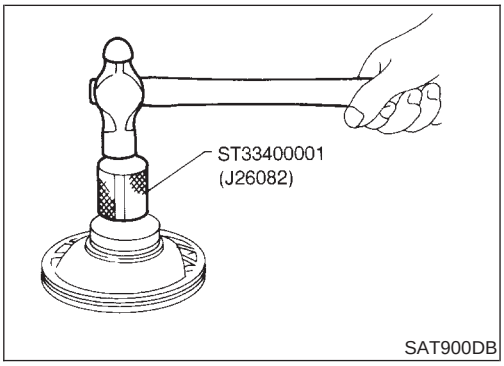

2. Install O-ring on oil pump housing.
- **Apply ATF to O-ring.**

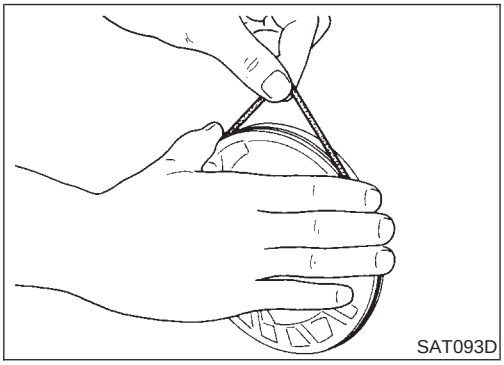

3. Install inner and outer gears on oil pump housing.
- **Be careful of direction of inner gear.**

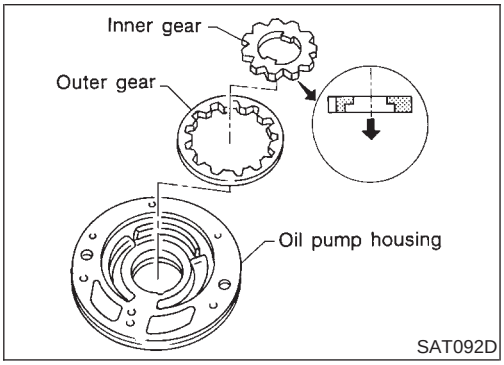

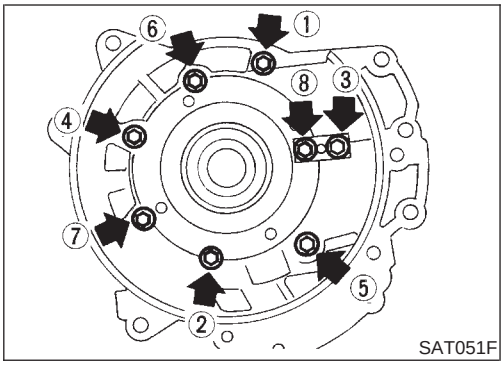

SAT051F

4. Install oil pump cover on oil pump housing.
   a. Wrap masking tape around splines of oil pump cover assembly to protect seal. Position oil pump cover assembly on oil pump housing assembly, then remove masking tape.
   b. Tighten bolts in a crisscross pattern. Tighten oil pump cover bolts to the specified torque. Refer to AT-310.

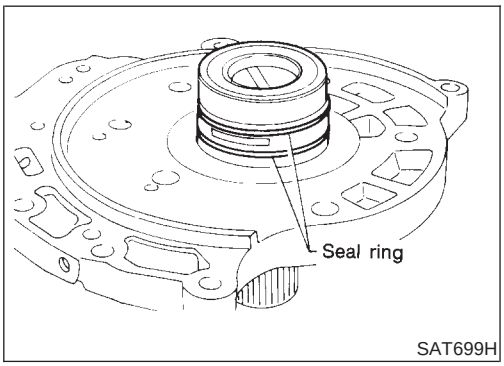

SAT699H

5. Install new seal rings carefully after packing ring groove with petroleum jelly.

- **Do not spread gap of seal ring excessively while installing. The ring may be deformed.**

Control Valve Assembly

COMPONENTS

=NHAT0133

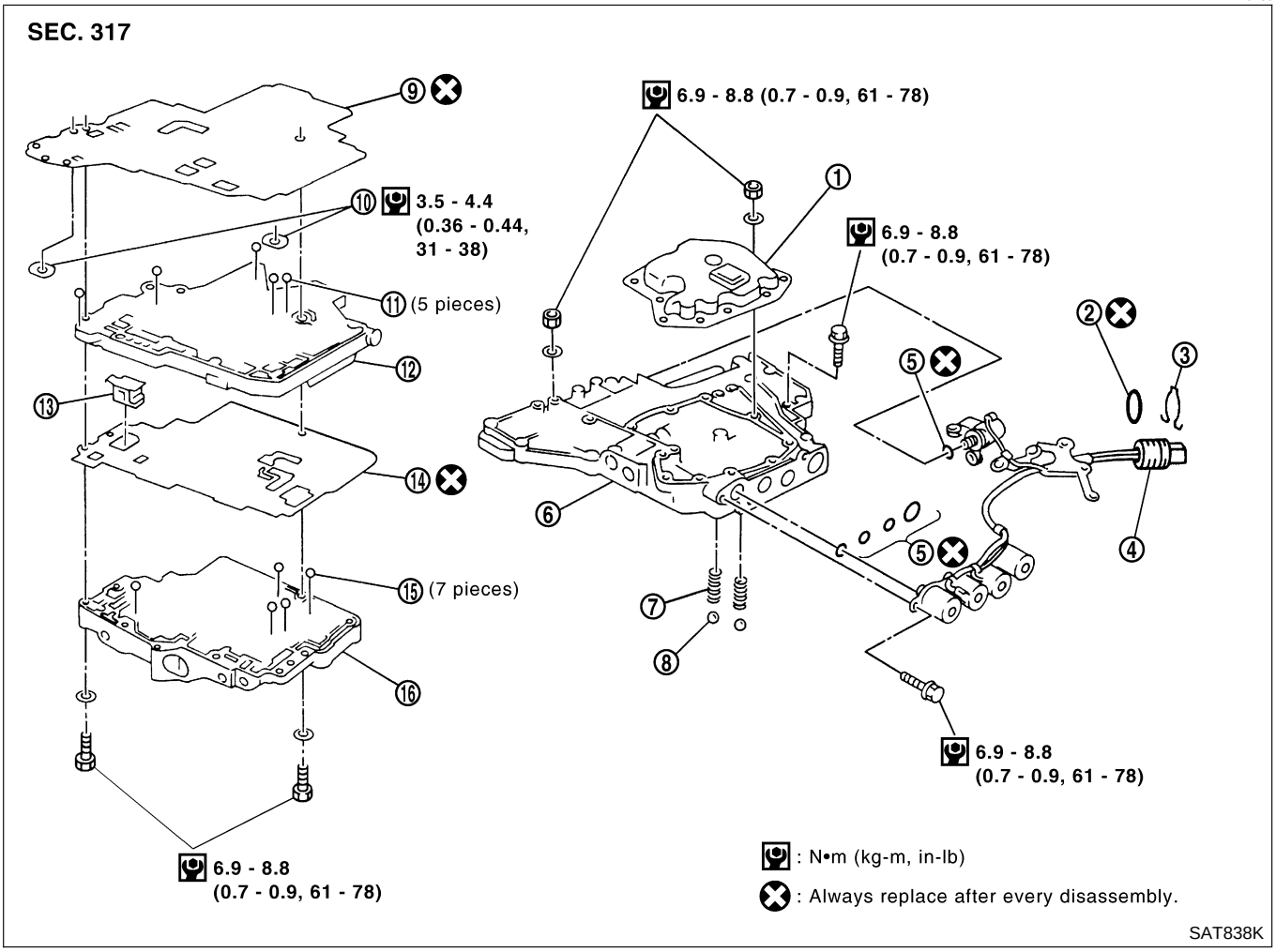

1. Oil strainer
2. O-ring
3. Snap ring
4. Terminal body
5. O-rings
6. Control valve lower body
7. Oil cooler relief valve spring
8. Check ball
9. Separating plate
10. Support plate
11. Steel ball
12. Control valve inter body
13. Pilot filter
14. Separating plate
15. Steel ball
16. Control valve upper body

DISASSEMBLY

NHAT0134

Disassemble upper, inter and lower bodies.

Bolt length, number and location:

Bolt symbol	a	b	c	d	e	f	g
Bolt length "ℓ" mm (in) ℓ	13.5 (0.531)	58.0 (2.283)	40.0 (1.575)	66.0 (2.598)	33.0 (1.299)	78.0 (3.071)	18.0 (0.709)
Number of bolts	6	3	6	11	2	2	1

f: Reamer bolt and nut.

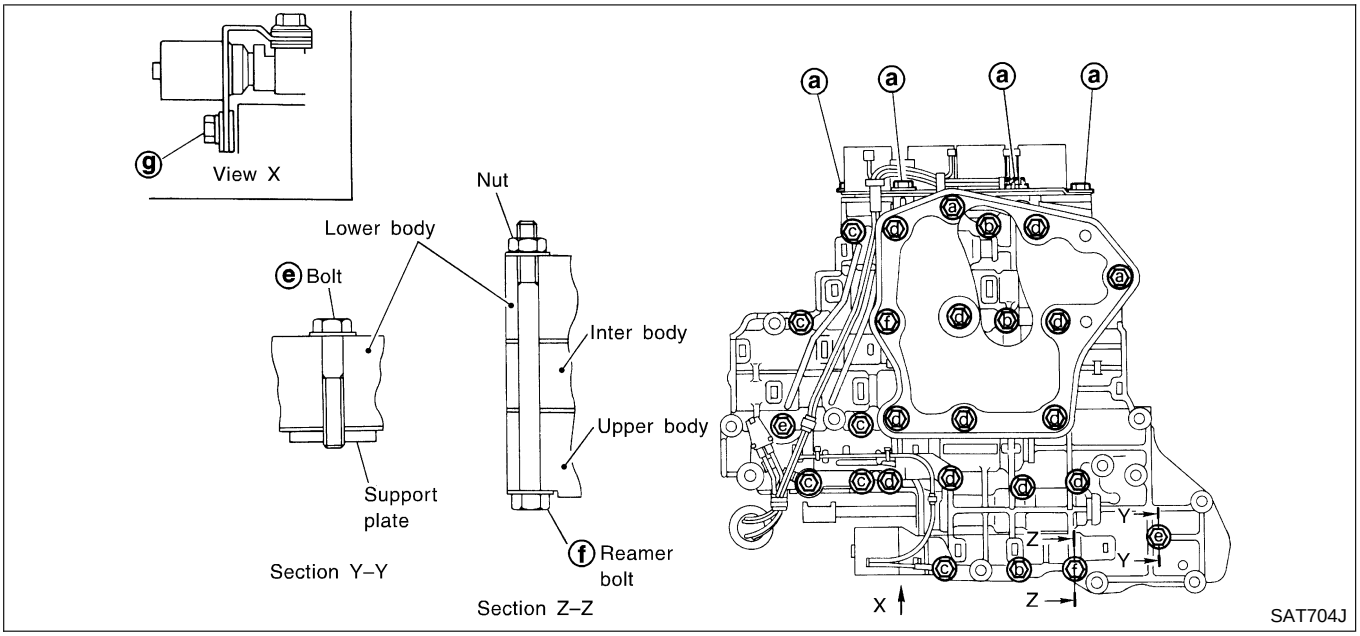

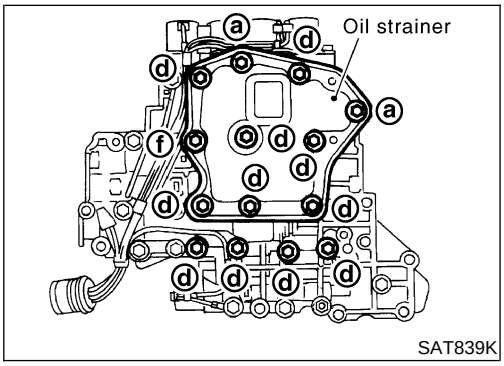

1. Remove bolts **a**, **d** and nut **f** and remove oil strainer from control valve assembly.

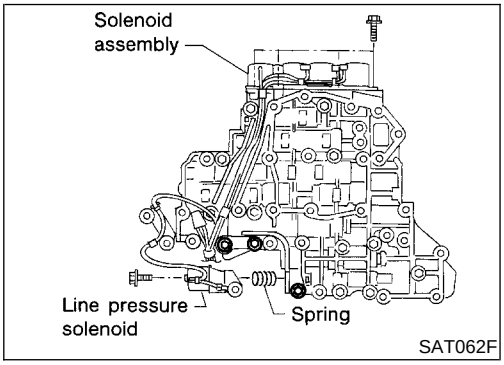

2. Remove solenoid valve assembly and line pressure solenoid valve from control valve assembly.

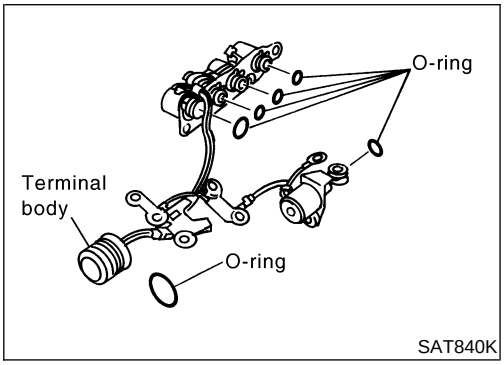

3. Remove O-rings from solenoid valves and terminal body.

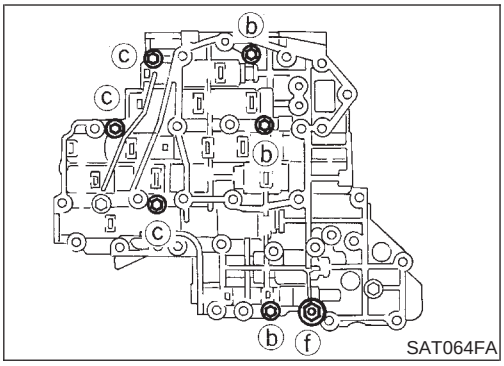

4. Place upper body facedown, and remove bolts **b**, **c** and nut **f**.

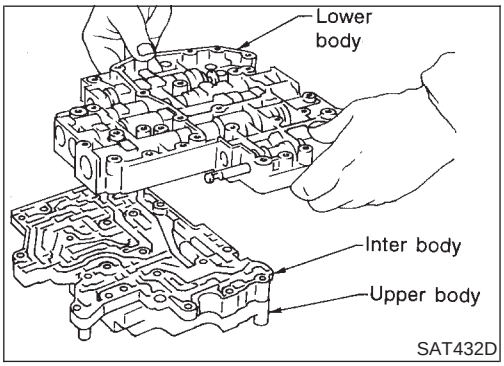

5. Remove inter body from lower body.

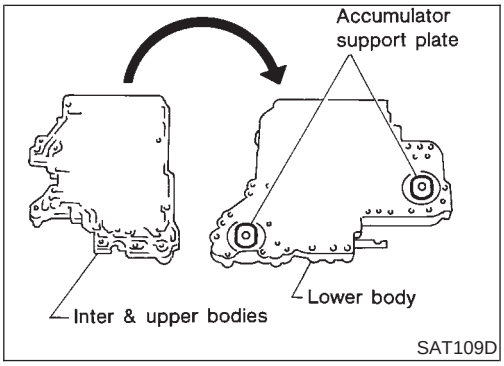

6. Turn over lower body, and remove accumulator support plate.

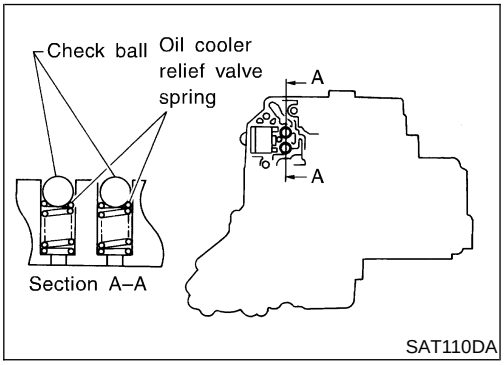

7. Remove bolts **e**, separating plate and separating gasket from lower body.
8. Remove check balls and oil cooler relief valve springs from lower body.

- **Be careful not to lose check balls and oil cooler relief valve springs.**

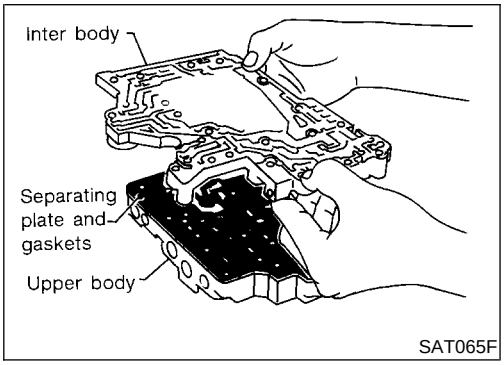

9. Remove inter body from upper body.

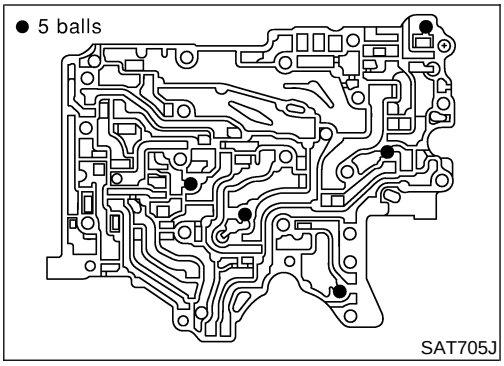

10. Check to see that steel balls are properly positioned in inter body and then remove them.
- **Be careful not to lose steel balls.**

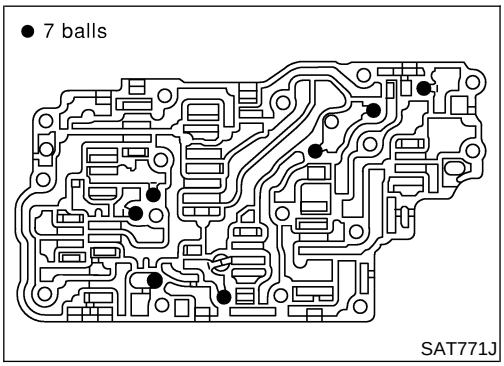

11. Check to see that steel balls are properly positioned in upper body and then remove them.
- **Be careful not to lose steel balls.**

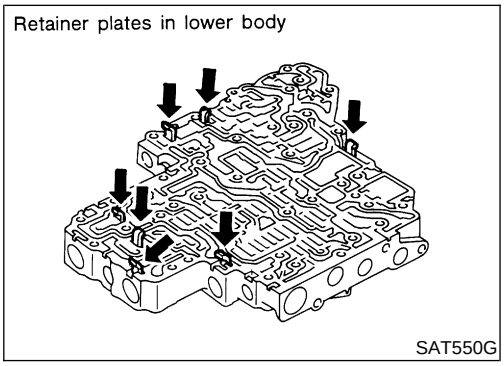

INSPECTION

NHAT0135

Lower and Upper Bodies

NHAT0135S01

- Check to see that retainer plates are properly positioned in lower body.

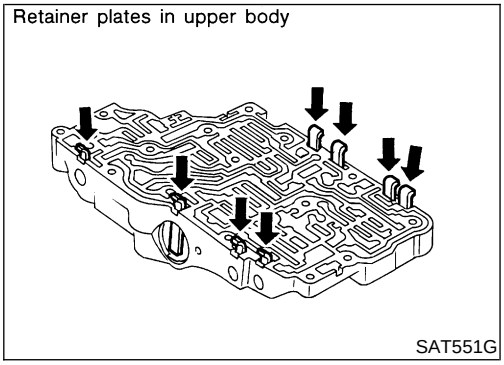

- Check to see that retainer plates are properly positioned in upper body.
- **Be careful not to lose these parts.**

Oil Strainer

NHAT0135S02

- Check wire netting of oil strainer for damage.

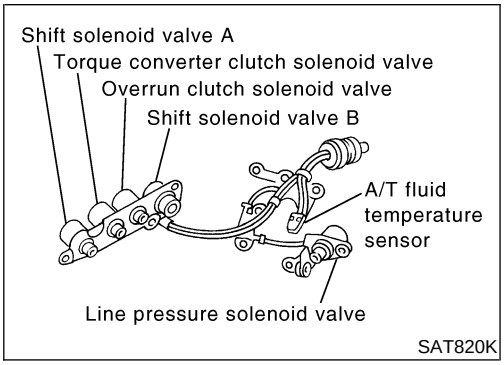

Shift Solenoid Valves "A" and "B", Line Pressure Solenoid Valve, Torque Converter Clutch Solenoid Valve and Overrun Clutch Solenoid Valve

NHAT0135S03

- Measure resistance.
- For shift solenoid valve A, refer to AT-178.
- For shift solenoid valve B, refer to AT-183.
- For line pressure solenoid valve, refer to AT-172.
- For torque converter clutch solenoid valve, refer to AT-157.
- For overrun clutch solenoid valve, refer to AT-194.

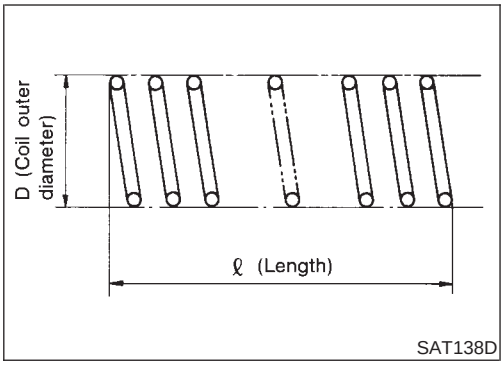

SAT138D

Oil Cooler Relief Valve Spring

NHAT0135S04

- Check springs for damage or deformation.
- Measure free length and outer diameter.

Inspection standard:
Refer to SDS, AT-382.

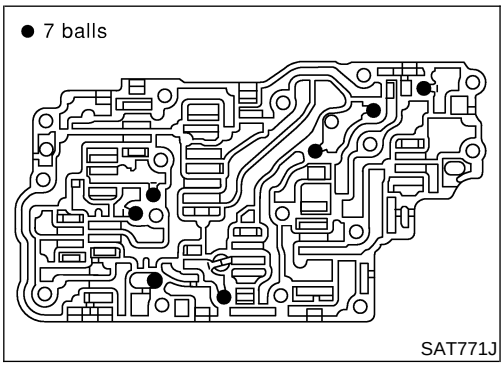

SAT771J

ASSEMBLY

NHAT0136

1. Install upper, inter and lower body.

a. Place oil circuit of upper body face up. Install steel balls in their proper positions.

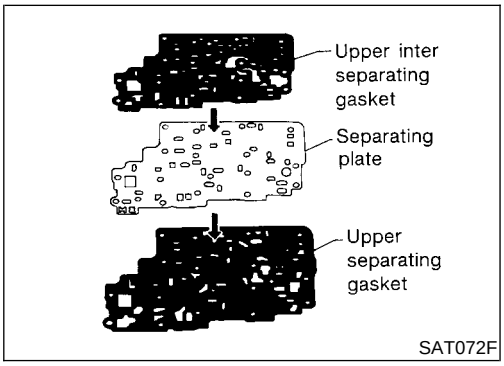

SAT072F

b. Install upper separating gasket, upper inter separating gasket and upper separating plate in order shown in illustration.

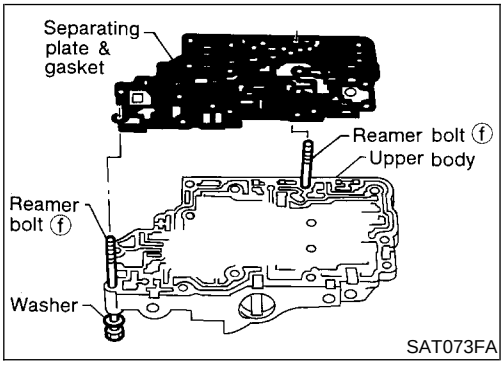

SAT073FA

c. Install reamer bolts **f** from bottom of upper body. Using reamer bolts as guides, install separating plate and gaskets as a set.

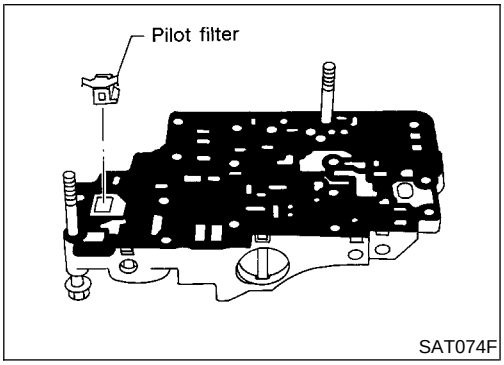

SAT074F

d. Install pilot filter.

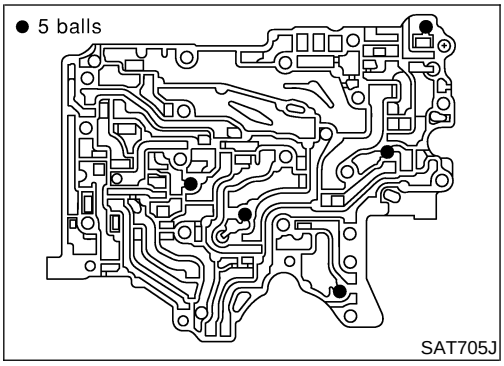

e. Place lower body as shown in illustration (side of inter body face up). Install steel balls in their proper positions.

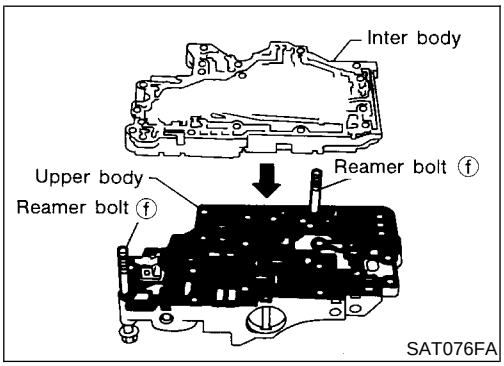

f. Install inter body on upper body using reamer bolts **f** as guides.

- **Be careful not to dislocate or drop steel balls.**

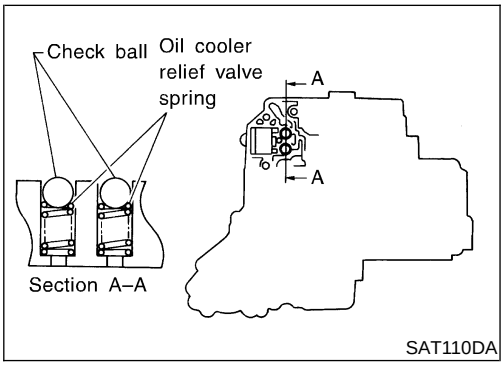

g. Install check balls and oil cooler relief valve springs in their proper positions in lower body.

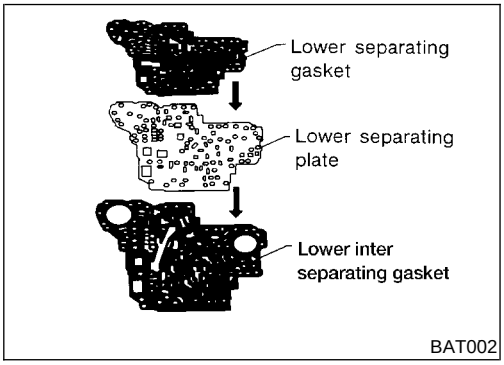

h. Install lower separating gasket, lower inter separating gasket and lower separating plate in order shown in illustration.

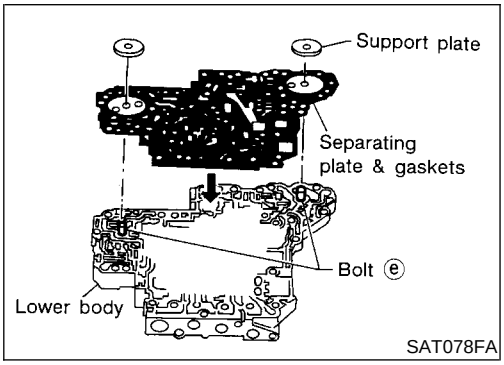

i. Install bolts **e** from bottom of lower body. Using bolts **e** as guides, install separating plate and gaskets as a set.

j. Temporarily install support plates on lower body.

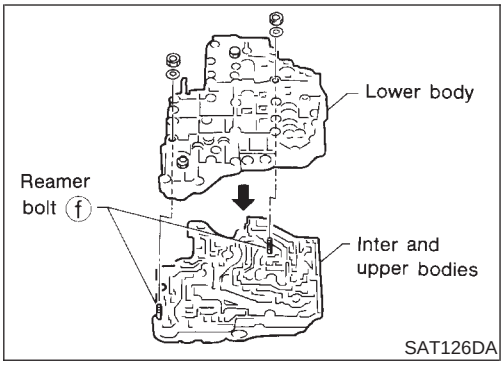

k. Install lower body on inter body using reamer bolts **f** as guides and tighten reamer bolts **f** slightly.

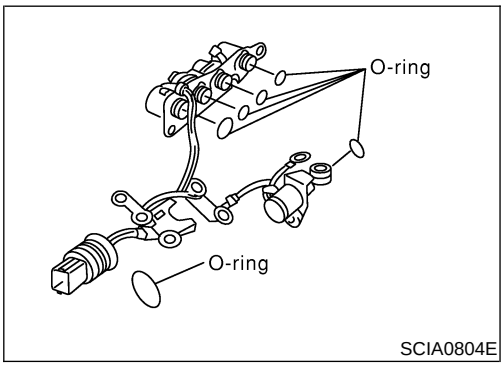

2. Install O-rings to solenoid valves and terminal body.

- **Apply ATF to O-rings.**

3. Install and tighten bolts.

Bolt length, number and location:

Bolt symbol	a	b	c	d	e	f	g
Bolt length "ℓ" mm (in)	13.5 (0.531)	58.0 (2.283)	40.0 (1.575)	66.0 (2.598)	33.0 (1.299)	78.0 (3.071)	18.0 (0.709)
Number of bolts	6	3	6	11	2	2	1

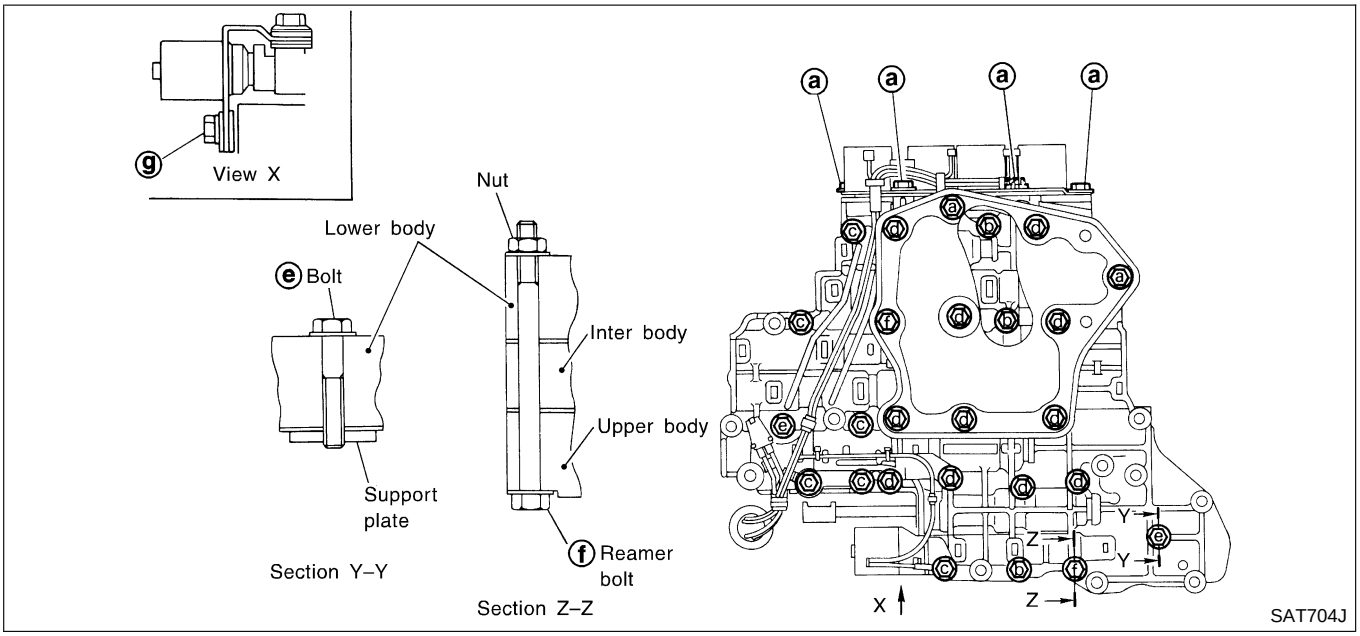

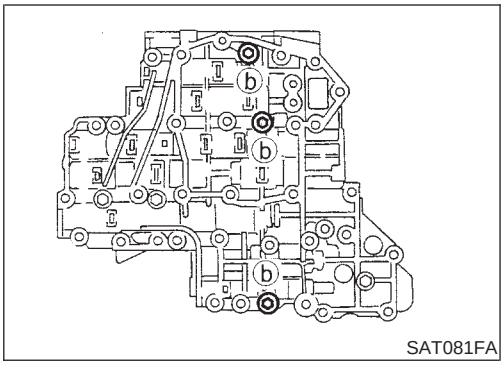

SAT081FA

a. Install and tighten bolts **b** to specified torque.
   : 6.9 - 8.8 N·m (0.7 - 0.9 kg-m, 61 - 78 in-lb)

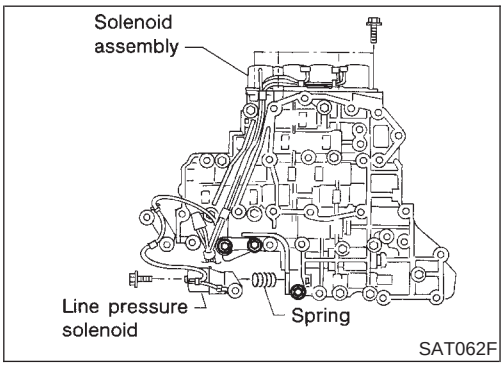

SAT062F

b. Install solenoid valve assembly and line pressure solenoid valve to lower body.

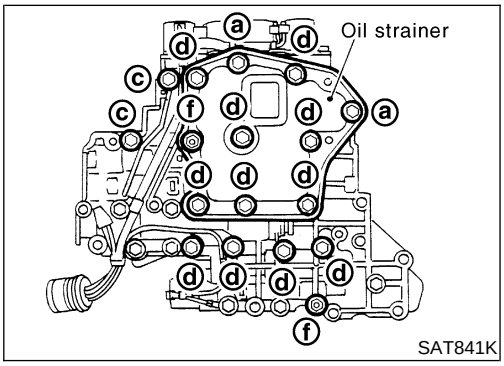

SAT841K

c. Set oil strainer, then tighten bolts **a**, **c**, **d** and nuts **f** to specified torque.
   : 6.9 - 8.8 N·m (0.7 - 0.9 kg-m, 61 - 78 in-lb)

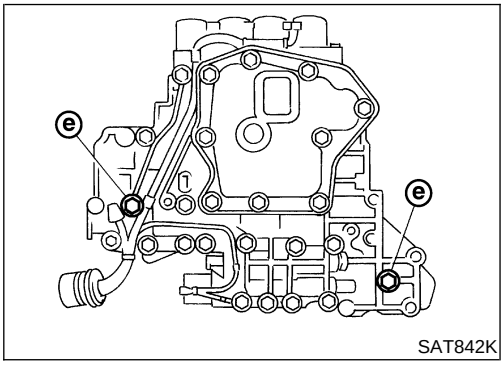

SAT842K

d. Tighten bolts **e** to specified torque.
   : 3.5 - 4.4 N·m (0.36 - 0.44 kg-m, 31 - 38 in-lb)

Control Valve Upper Body

COMPONENTS

=NHAT0137

Apply ATF to all components before installation.

SEC. 317

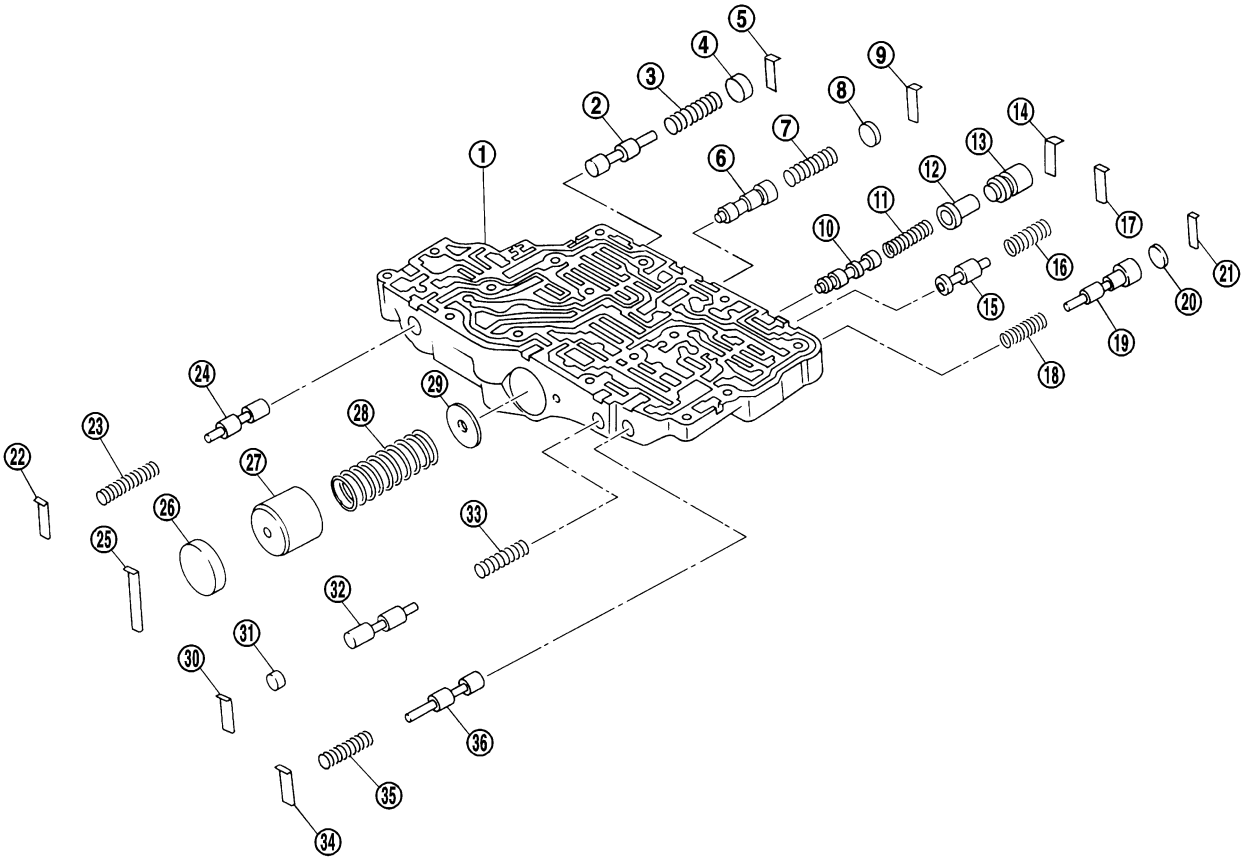

SAT772J

1. Upper body
2. Cooler check valve
3. Return spring
4. Plug
5. Retainer plate
6. 1-2 accumulator valve
7. Return spring
8. Plug
9. Retainer plate
10. Torque converter clutch control valve
11. Return spring
12. Torque converter clutch control plug
13. Torque converter clutch control sleeve
14. Retainer plate
15. Torque converter relief valve
16. Return spring
17. Retainer plate
18. Return spring
19. Overrun clutch reducing valve
20. Plug
21. Retainer plate
22. Retainer plate
23. Return spring
24. Pilot valve
25. Retainer plate
26. Plug
27. 1-2 accumulator piston
28. Return spring
29. 1-2 accumulator retainer plate
30. Retainer plate
31. Plug
32. 1st reducing valve
33. Return spring
34. Retainer plate
35. Return spring
36. 3-2 timing valve

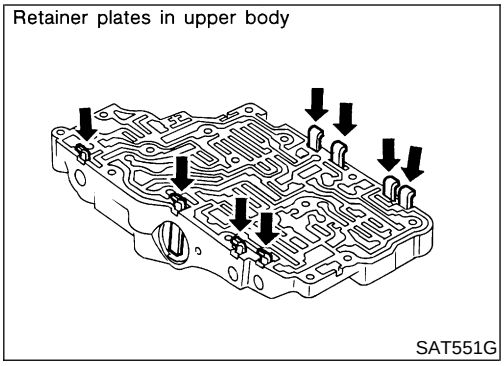

DISASSEMBLY

NHAT0138

1. Remove valves at retainer plates.

- **Do not use a magnetic pick-up tool.**

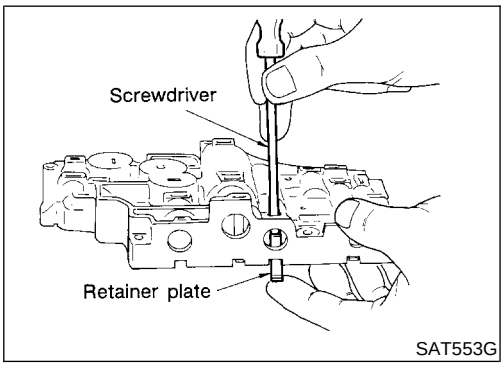

a. Use a screwdriver to remove retainer plates.

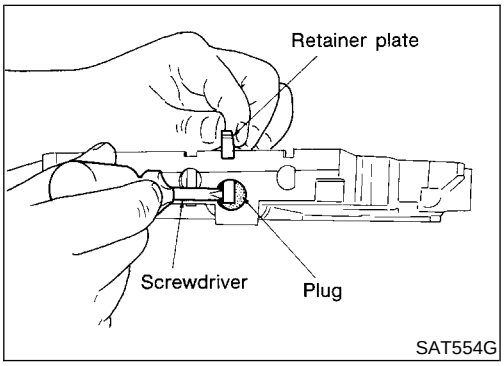

b. Remove retainer plates while holding spring, plugs or sleeves.

- **Remove plugs slowly to prevent internal parts from jumping out.**

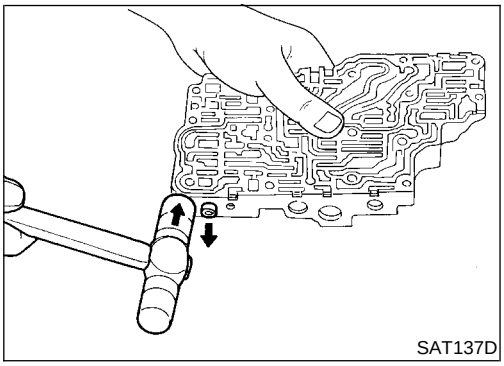

c. Place mating surface of valve body face down, and remove internal parts.

- **If a valve is hard to remove, place valve body face down and lightly tap it with a soft hammer.**
- **Be careful not to drop or damage valves and sleeves.**

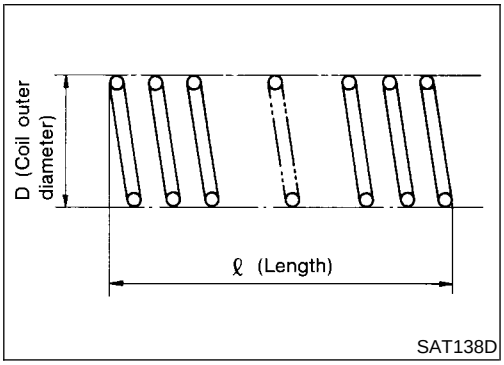

INSPECTION

NHAT0139

Valve Spring

NHAT0139S01

- Measure free length and outer diameter of each valve spring. Also check for damage or deformation.

  Inspection standard:

  Refer to SDS, AT-382.

- Replace valve springs if deformed or fatigued.

Control Valves

NHAT0139S02

- Check sliding surfaces of valves, sleeves and plugs.

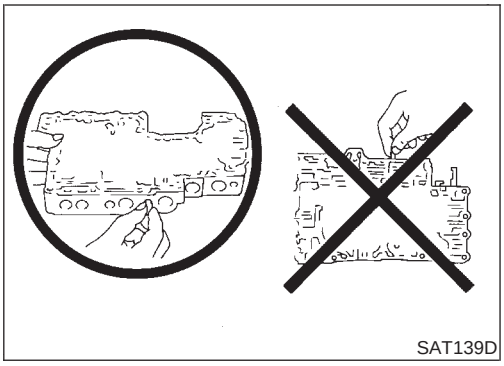
SAT139D

ASSEMBLY

NHAT0140

- **Lay control valve body down when installing valves. Do not stand the control valve body upright.**

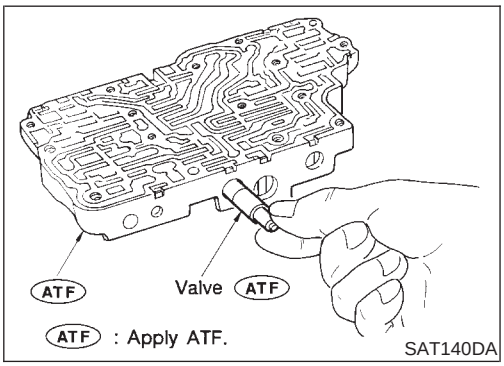

SAT140DA

1. Lubricate the control valve body and all valves with ATF. Install control valves by sliding them carefully into their bores.
- **Be careful not to scratch or damage valve body.**

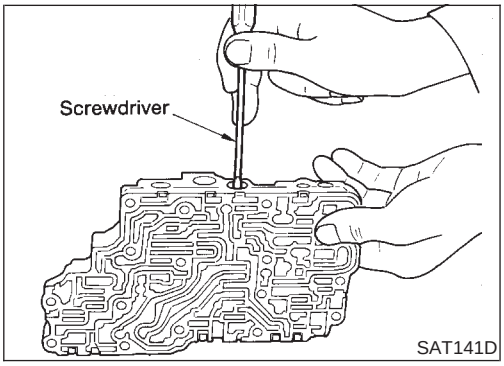

SAT141D

- Wrap a small screwdriver with vinyl tape and use it to insert the valves into their proper positions.

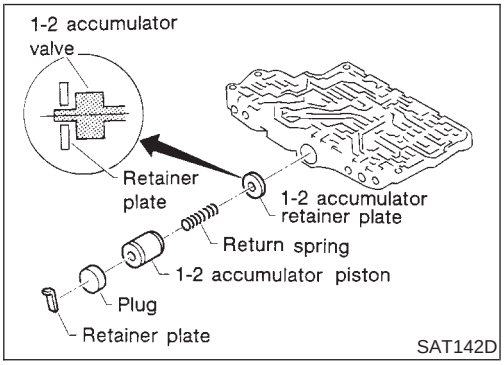

SAT142D

1-2 Accumulator Valve

NHAT0140S01

- Install 1-2 accumulator valve. Align 1-2 accumulator retainer plate from opposite side of control valve body.
- Install return spring, 1-2 accumulator piston and plug.

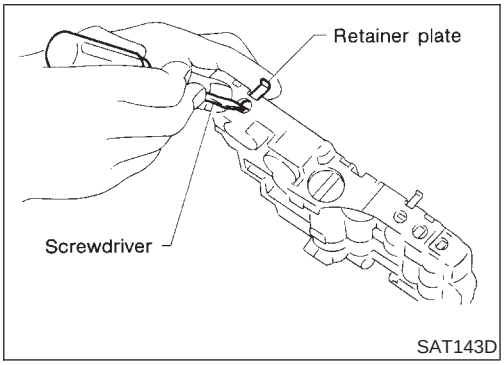

SAT143D

1. Install retainer plates.
- While pushing plug or return spring, install retainer plate.

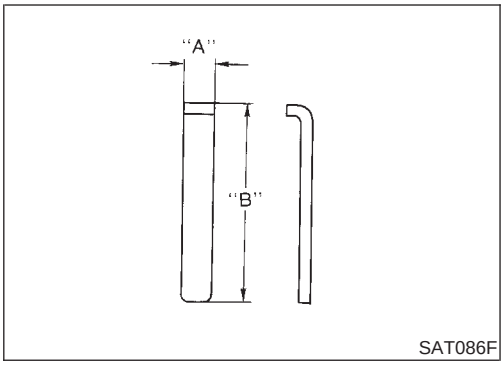

Retainer Plate (Upper body)

NHAT0140S02

Unit: mm (in)

No.	Name of control valve	Width A	Length B
22	Pilot valve	6.0 (0.236)	21.5 (0.846)
30	1st reducing valve		
34	3-2 timing valve		
17	Torque converter relief valve		
9	1-2 accumulator valve		38.5 (1.516)
25	1-2 accumulator piston valve		
21	Overrun clutch reducing valve		24.0 (0.945)
5	Cooler check valve		
14	Torque converter clutch control valve		28.0 (1.102)

- Install proper retainer plates.
  Refer to "Control Valve Upper Body", AT-322.

Control Valve Lower Body

COMPONENTS

=NHAT0141

Apply ATF to all components before installation.

SEC. 317

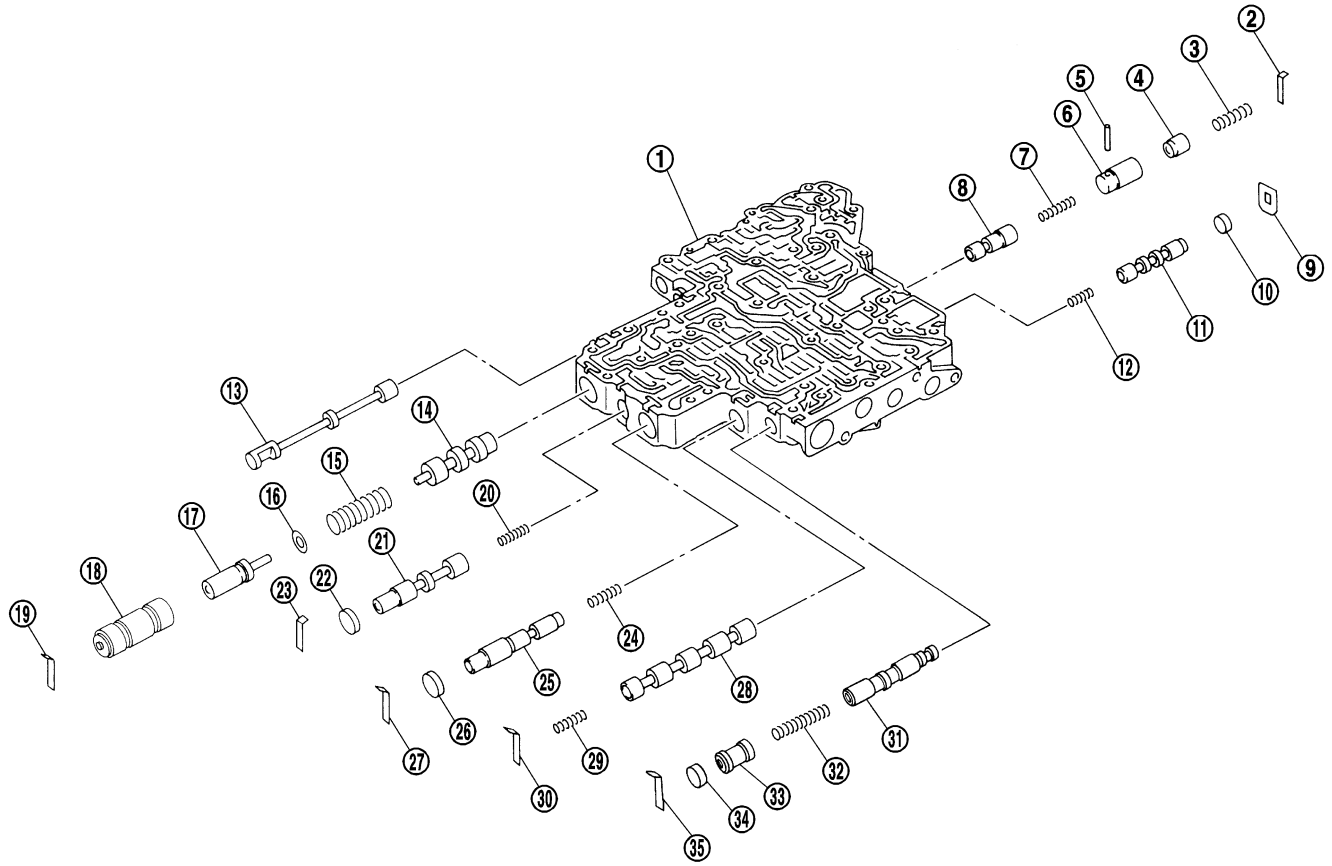

SAT773J

1. Lower body
2. Retainer plate
3. Return spring
4. Piston
5. Parallel pin
6. Sleeve
7. Return spring
8. Pressure modifier valve
9. Retainer plate
10. Plug
11. Shift valve B
12. Return spring
13. Manual valve
14. Pressure regulator valve
15. Return spring
16. Spring seat
17. Plug
18. Sleeve
19. Retainer plate
20. Return spring
21. Overrun clutch control valve
22. Plug
23. Retainer plate
24. Return spring
25. Accumulator control valve
26. Plug
27. Retainer plate
28. Shift valve A
29. Return spring
30. Retainer plate
31. Shuttle valve
32. Return spring
33. Plug
34. Plug
35. Retainer plate

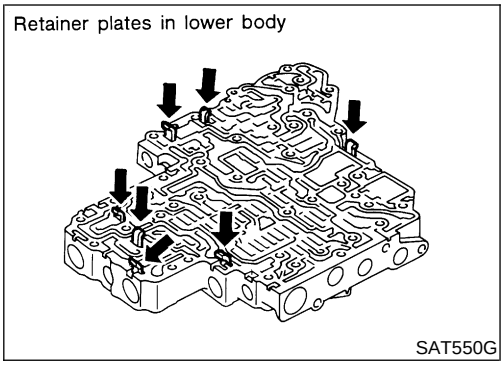

DISASSEMBLY

NHAT0142

- Remove valves at retainer plate.
  For removal procedures, refer to "DISASSEMBLY", "Control Valve Upper Body", AT-323.

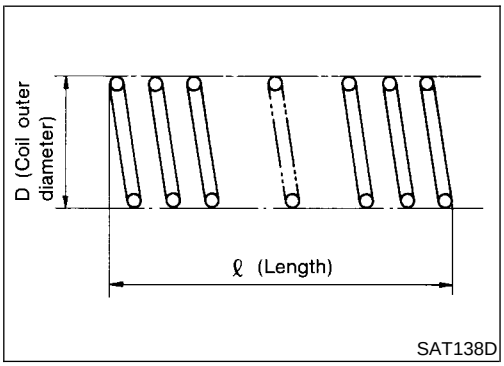

INSPECTION

NHAT0143

Valve Springs

NHAT0143S01

- Check each valve spring for damage or deformation. Also measure free length and outer diameter.

  Inspection standard:

  Refer to SDS, AT-382.

- Replace valve springs if deformed or fatigued.

Control Valves

NHAT0143S02

- Check sliding surfaces of control valves, sleeves and plugs for damage.

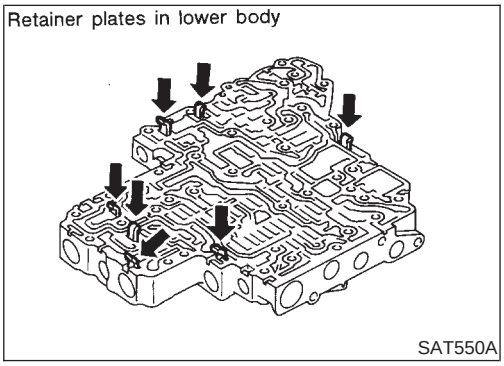

ASSEMBLY

NHAT0144

- Install control valves.
  For installation procedures, refer to "ASSEMBLY", "Control Valve Upper Body", AT-324.

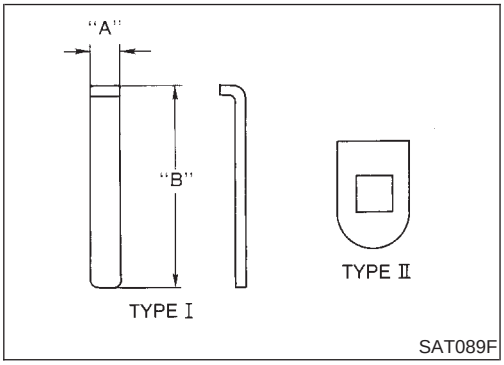

Retainer Plate (Lower body)

NHAT0144S01

Unit: mm (in)

No.	Name of control valve and plug	Width A	Length B	Type
19	Pressure regulator valve	6.0 (0.236)	28.0 (1.102)	I
27	Accumulator control valve			
30	Shift valve A			
23	Overrun clutch control valve			
2	Pressure modifier valve			
35	Shuttle valve			
9	Shift valve B	—	—	II

- Install proper retainer plates.
  Refer to "Control Valve Lower Body", AT-326.

Reverse Clutch

COMPONENTS

NHAT0145

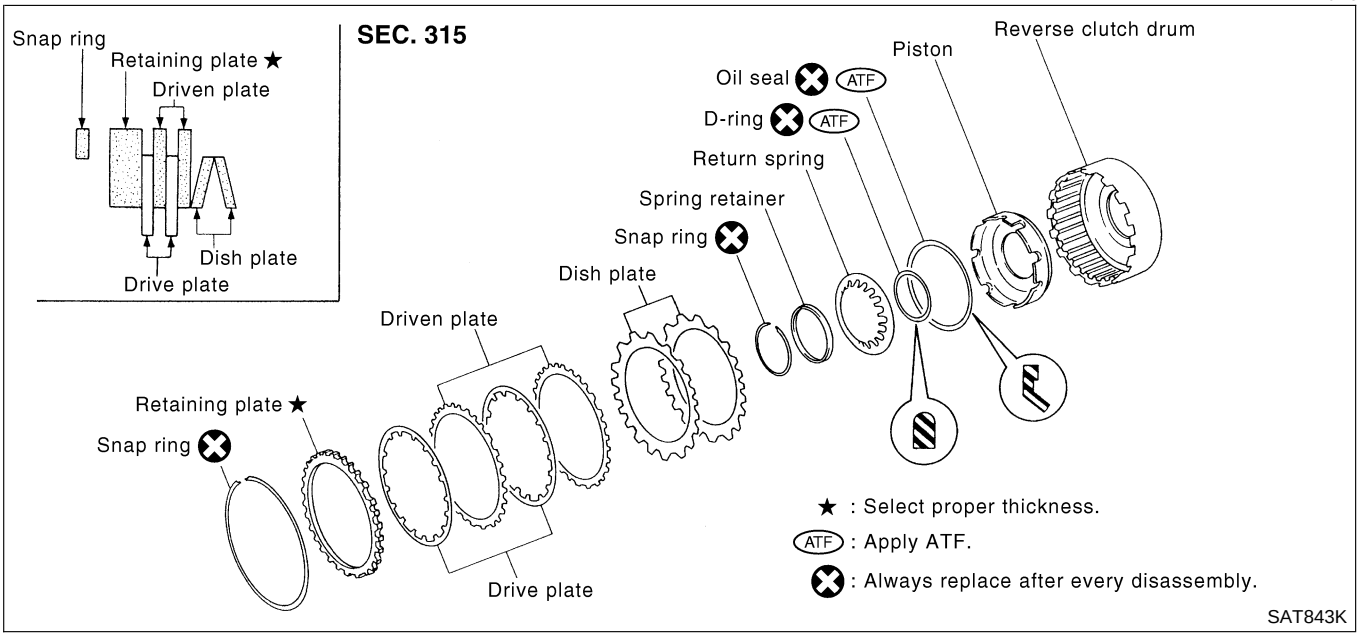

DISASSEMBLY

NHAT0146

1. Check operation of reverse clutch

a. Install seal ring onto drum support of oil pump cover and install reverse clutch assembly. Apply compressed air to oil hole.

b. Check to see that retaining plate moves to snap ring.

c. If retaining plate does not contact snap ring:

- D-ring might be damaged.
- Oil seal might be damaged.
- Fluid might be leaking past piston check ball.

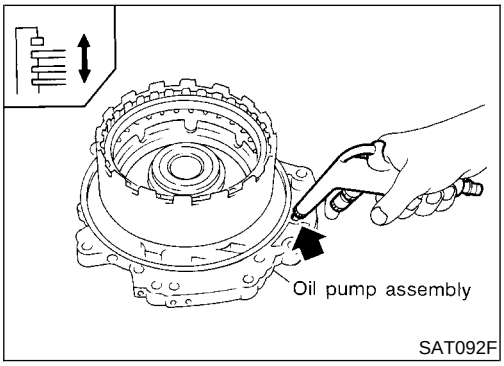

2. Remove snap ring.
3. Remove drive plates, driven plates, retaining plate, and dish plates.

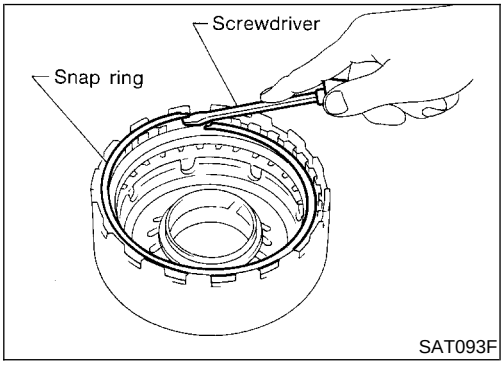

4. Set Tool on spring retainer and remove snap ring from reverse clutch drum while compressing return springs.

- **Set Tool directly over springs.**
- **Do not expand snap ring excessively.**

5. Remove spring retainer and return springs.

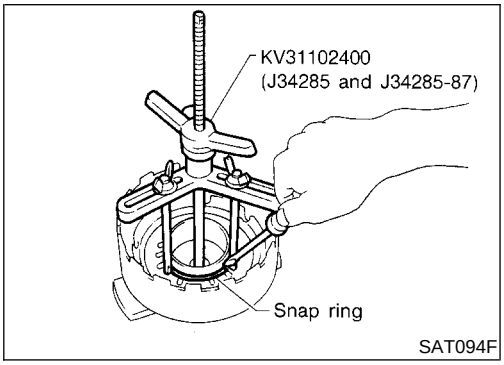

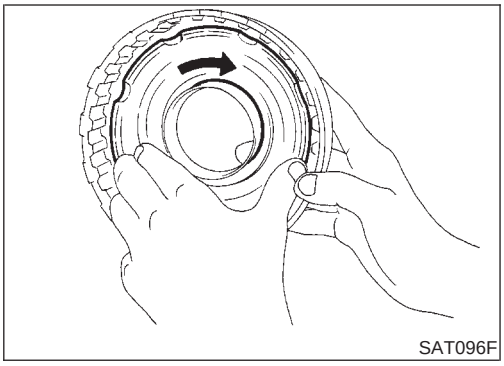
SAT096F

6. Remove piston from reverse clutch drum by turning it.
7. Remove D-ring and oil seal from piston.

INSPECTION

NHAT0147

Reverse Clutch Snap Ring, Spring Retainer and Return Springs

NHAT0147S01

- Check for deformation, fatigue or damage.
  If necessary, replace.

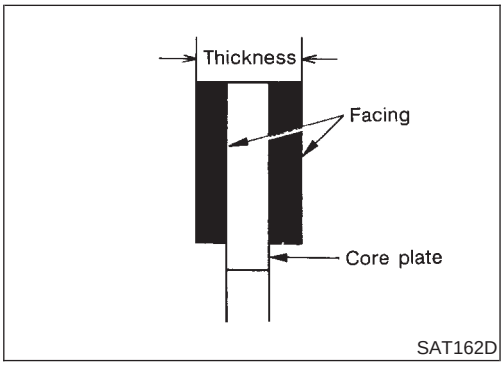

SAT162D

Reverse Clutch Drive Plates

NHAT0147S02

- Check facing for burns, cracks or damage.
- Measure thickness of facing.
  Thickness of drive plate:
  Standard value: 1.6 mm (0.063 in)
  Wear limit: 1.4 mm (0.055 in)
- If not within wear limit, replace.

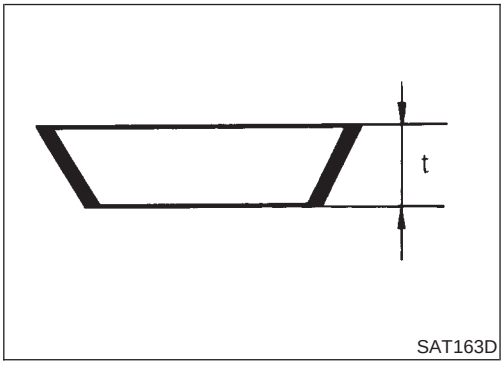

SAT163D

Reverse Clutch Dish Plates

NHAT0147S03

- Check for deformation or damage.
- Measure thickness of dish plate.
  Thickness of dish plate: 3.08 mm (0.1213 in)
- If deformed or fatigued, replace.

Reverse Clutch Piston

NHAT0147S04

- Make sure that check balls are not fixed.
- Apply compressed air to check ball oil hole opposite the return spring. Make sure there is no air leakage.
- Apply compressed air to oil hole on return spring side to make sure that air leaks past ball.

ASSEMBLY

NHAT0148

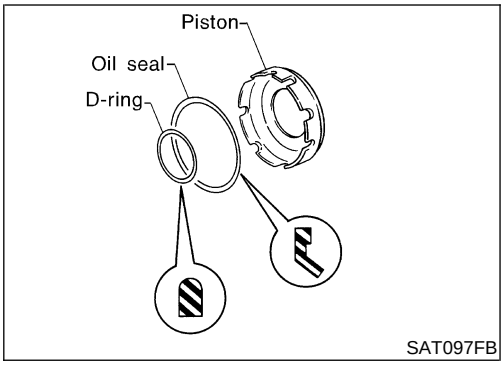

1. Install D-ring and oil seal on piston.
- **Take care with the direction of oil seal.**
- **Apply ATF to both parts.**

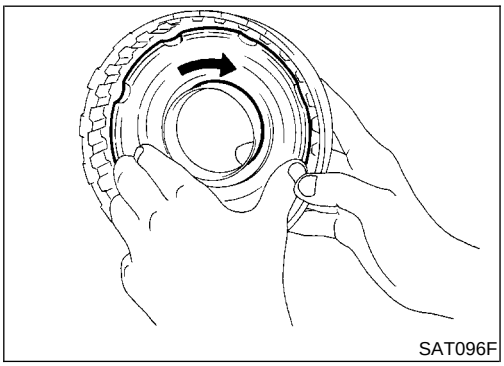

2. Install piston assembly by turning it slowly.
- **Apply ATF to inner surface of drum.**

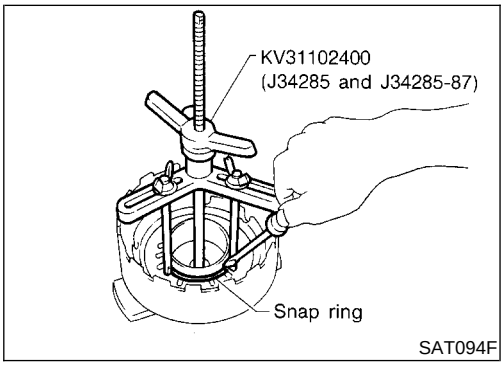

3. Install return springs and spring retainer on piston.
4. Set Tool on spring retainer and install snap ring while compressing return springs.
- **Set Tool directly over return springs.**

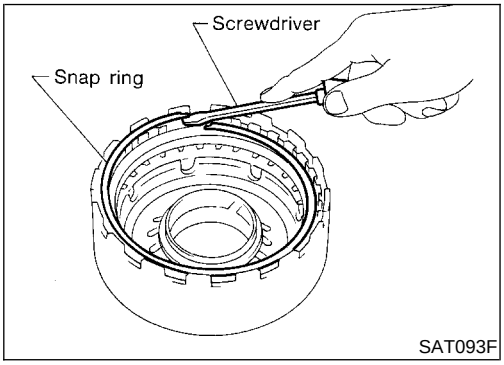

5. Install drive plates, driven plates, retaining plate and dish plates.
- **Take care with order of plates.**
6. Install snap ring.

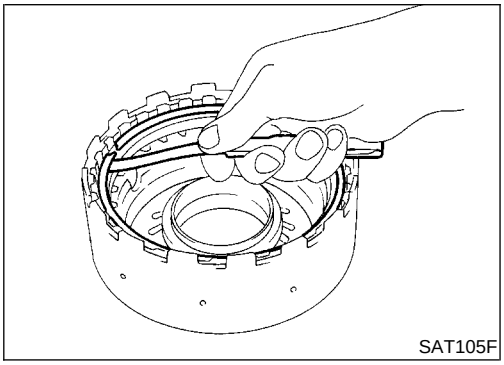

7. Measure clearance between retaining plate and snap ring. If not within allowable limit, select proper retaining plate.

Specified clearance:

Standard 0.5 - 0.8 mm (0.020 - 0.031 in)

Allowable limit 1.2 mm (0.047 in)

Retaining plate:

Refer to SDS, AT-383.

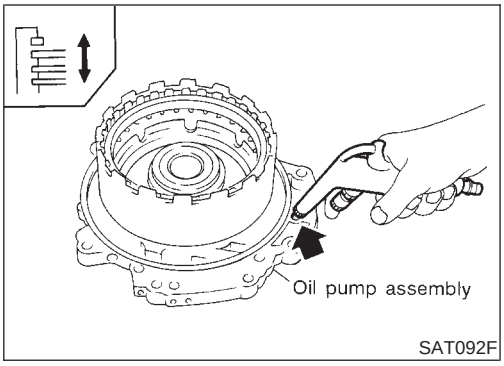

8. Check operation of reverse clutch.
   Refer to "DISASSEMBLY", "Reverse Clutch", AT-328.

High Clutch

COMPONENTS

NHAT0149

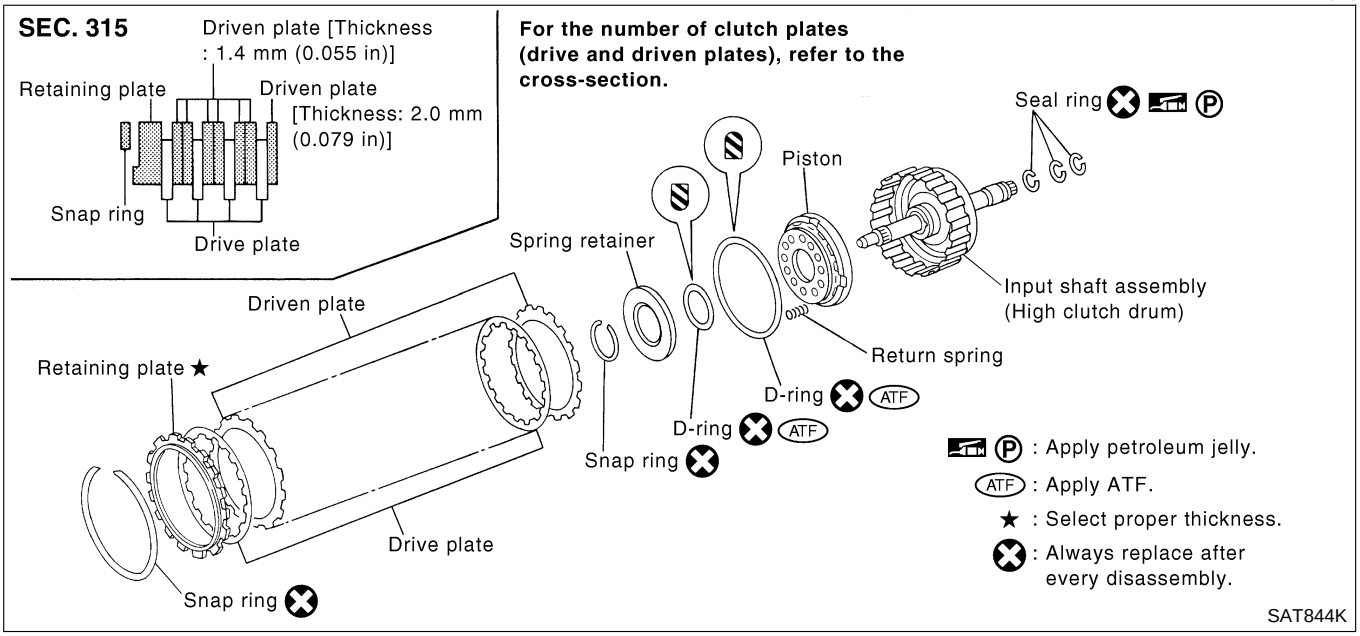

DISASSEMBLY

NHAT0150

1. Check operation of high clutch.

a. Apply compressed air to oil hole of input shaft with nylon cloth.

- **Stop up hole on opposite side of input shaft with nylon cloth.**

b. Check to see that retaining plate moves to snap ring.

c. If retaining plate does not contact snap ring:

- D-ring might be damaged.
- Oil seal might be damaged.
- Fluid might be leaking past piston check ball.

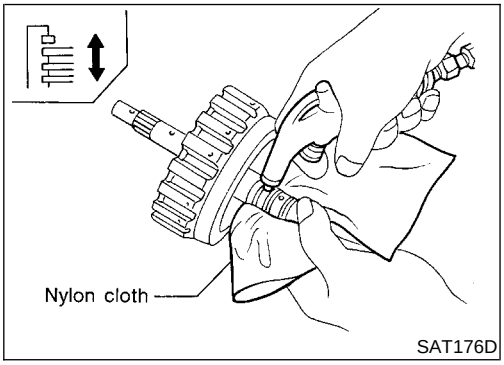

2. Remove seal rings from input shaft.

- **Always replace when removed.**

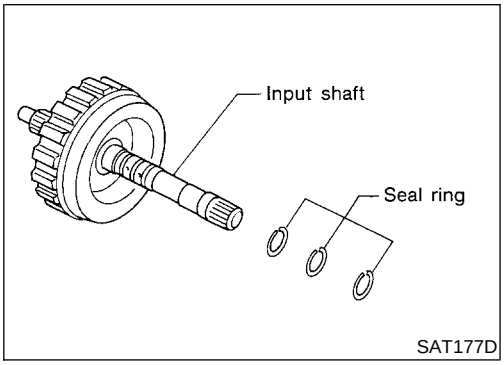

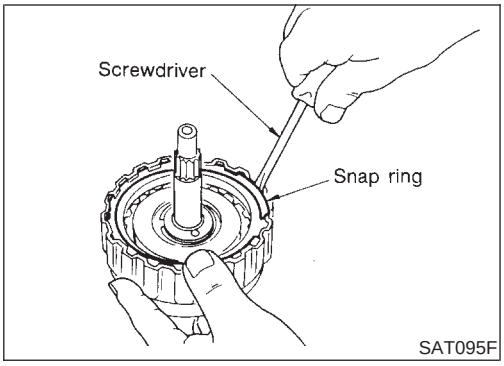

3. Remove snap ring.
4. Remove drive plates, driven plates and retaining plate.

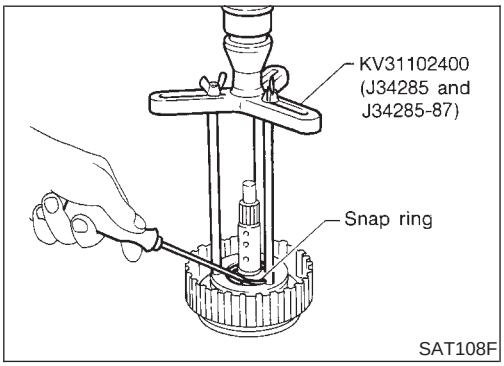

5. Set Tool on spring retainer and remove snap ring from high clutch drum while compressing return springs.
- **Set Tool directly over springs.**
- **Do not expand snap ring excessively.**
6. Remove spring retainer and return springs.

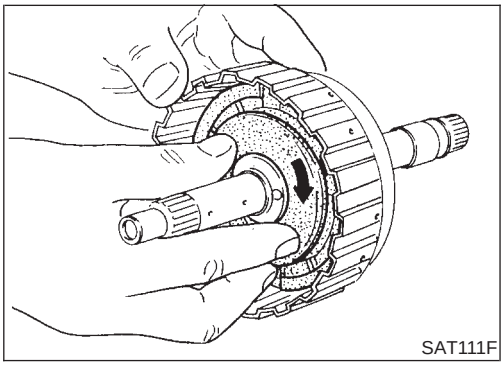

7. Remove piston from high clutch drum by turning it.

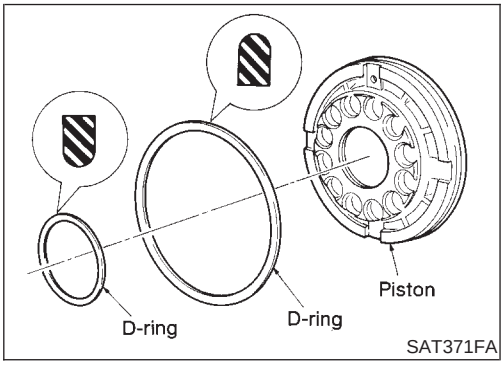

8. Remove D-rings from piston.

INSPECTION

NHAT0151

High Clutch Snap Ring, Spring Retainer and Return Springs

NHAT0151S01

- Check for deformation, fatigue or damage.
  If necessary, replace.
- **When replacing spring retainer and return springs, replace them as a set.**

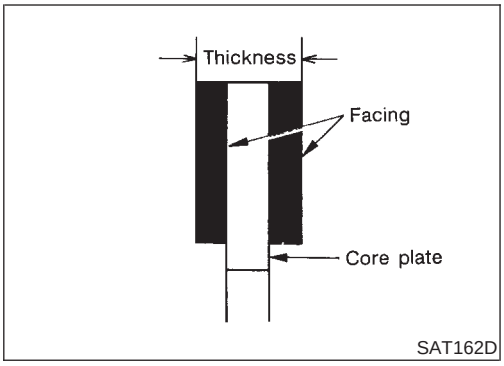

SAT162D

High Clutch Drive Plates

NHAT0151S02

- Check facing for burns, cracks or damage.
- Measure thickness of facing.

  Thickness of drive plate:

  Standard value 1.6 mm (0.063 in)

  Wear limit 1.4 mm (0.055 in)
- If not within wear limit, replace.

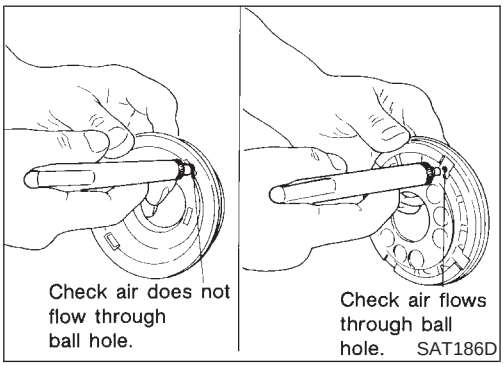

SAT186D

High Clutch Piston

NHAT0151S03

- Make sure that check balls are not fixed.
- Apply compressed air to check ball oil hole opposite the return spring. Make sure there is no air leakage.
- Apply compressed air to oil hole on return spring side to make sure that air leaks past ball.

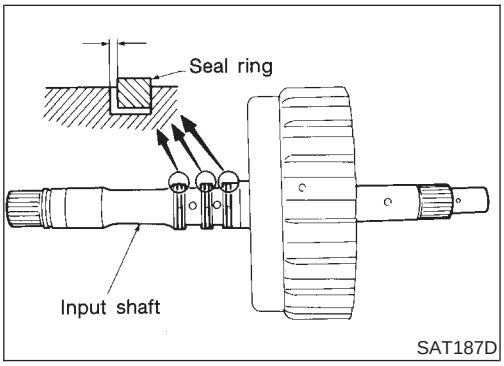

SAT187D

Seal Ring Clearance

NHAT0151S04

- Install new seal rings onto input shaft.
- Measure clearance between seal ring and ring groove.

  Standard clearance:

  0.08 - 0.23 mm (0.0031 - 0.0091 in)

  Allowable limit:

  0.23 mm (0.0091 in)
- If not within allowable limit, replace input shaft assembly.

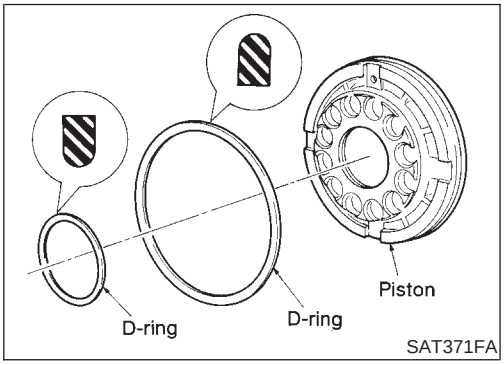

SAT371FA

ASSEMBLY

NHAT0152

1. Install D-rings on piston.
- **Apply ATF to both parts.**

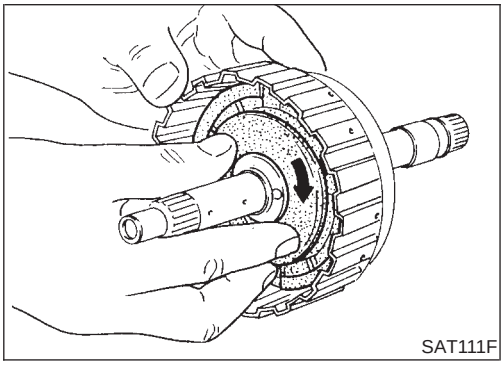
SAT111F

2. Install piston assembly by turning it slowly.
- **Apply ATF to inner surface of drum.**

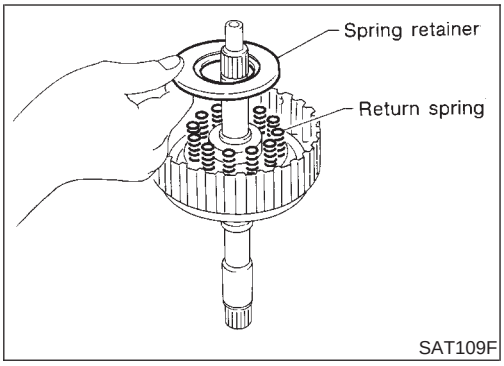

3. Install return springs and spring retainer on piston.

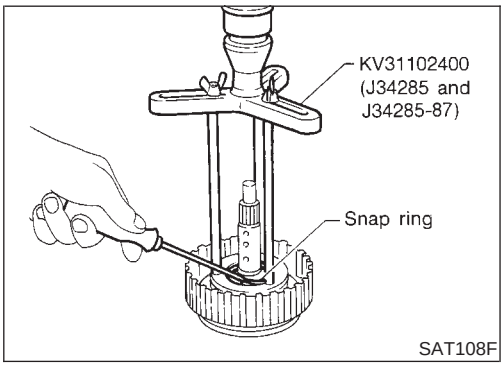

4. Set Tool on spring retainer and install snap ring while compressing return springs.
- **Set Tool directly over return springs.**

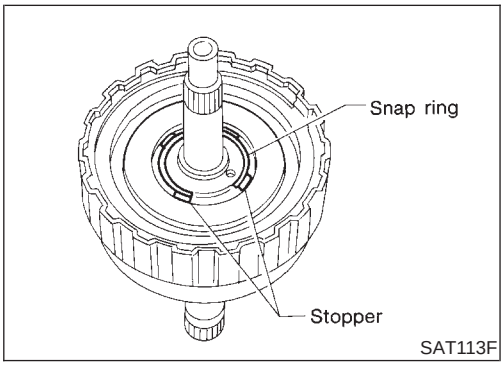

- **Do not align snap ring gap with spring retainer stopper.**

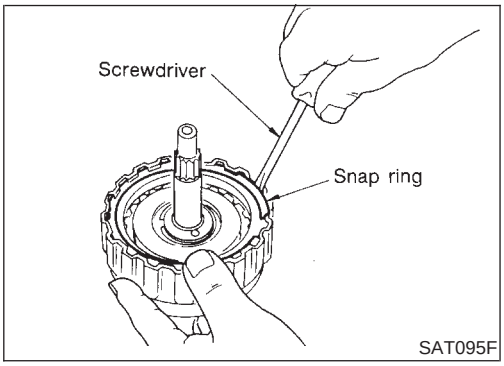

5. Install drive plates, driven plates and retaining plate.
- **Take care with the order and direction of plates.**
6. Install snap ring.

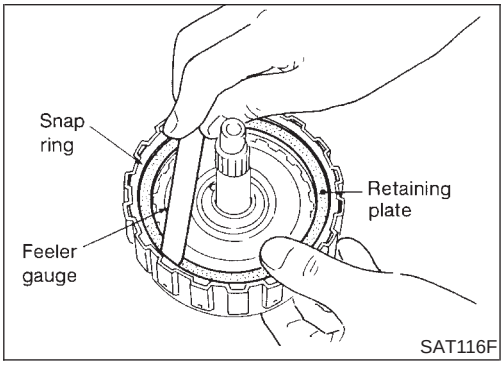

7. Measure clearance between retaining plate and snap ring. If not within allowable limit, select proper retaining plate.

Specified clearance:

Standard 1.8 - 2.2 mm (0.071 - 0.087 in)

Allowable limit 2.8 mm (0.110 in)

Retaining plate:

Refer to SDS, AT-383.

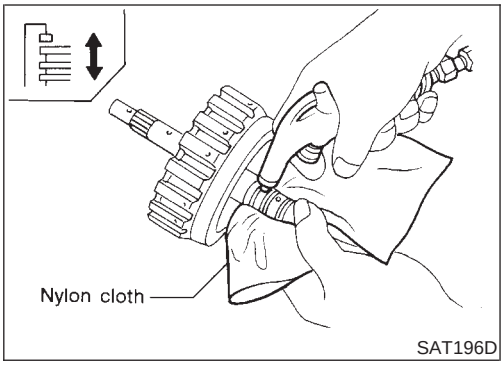

SAT196D

8. Check operation of high clutch.
   Refer to "DISASSEMBLY", "High Clutch", AT-331.

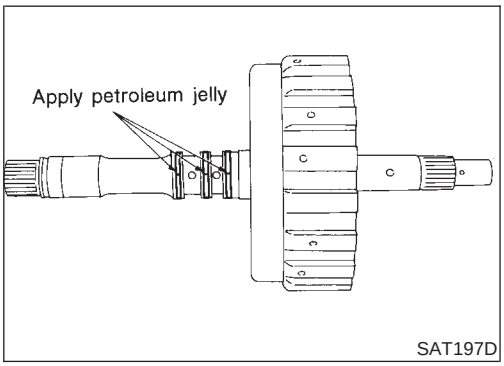

SAT197D

9. Install seal rings to input shaft.
   - **Apply petroleum jelly to seal rings.**
   - **Always replace when removed.**

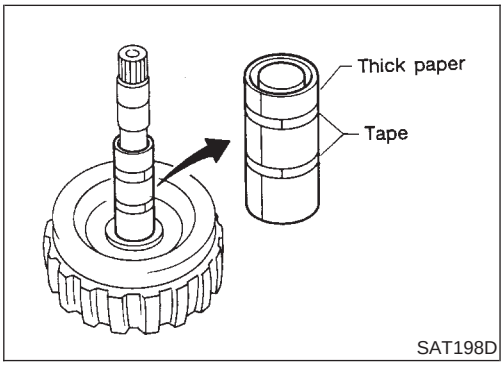

SAT198D

- **Roll paper around seal rings to prevent seal rings from spreading.**

Forward and Overrun Clutches

COMPONENTS

NHAT0153

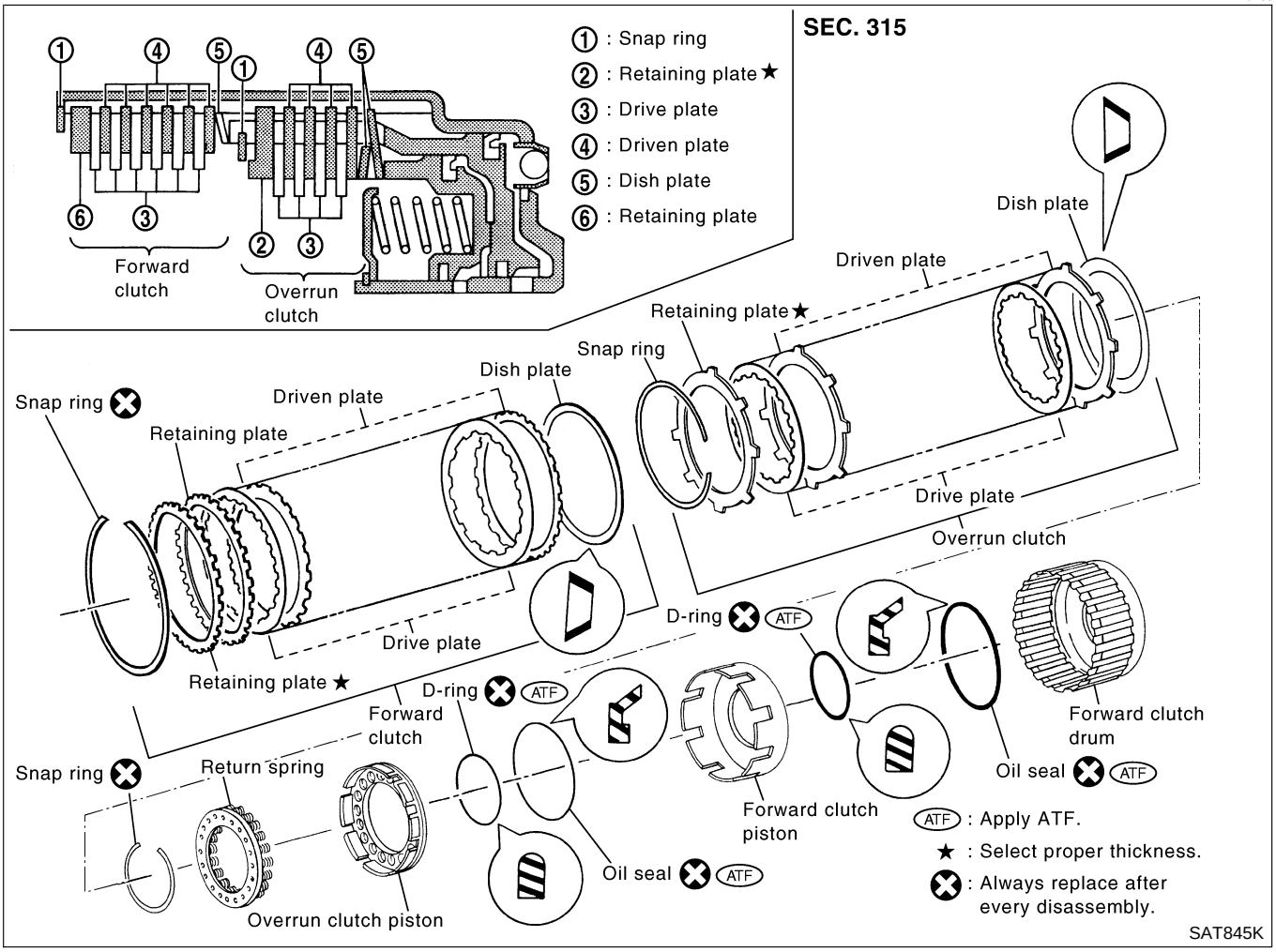

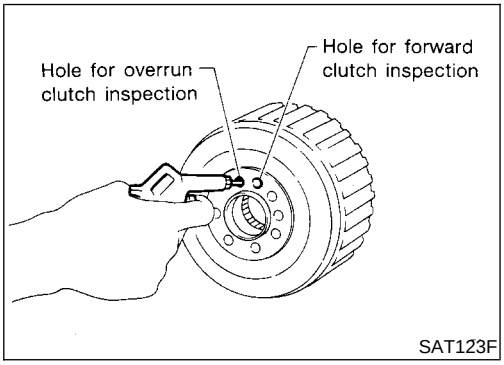

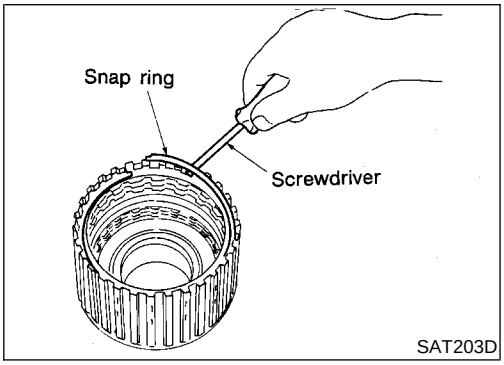

DISASSEMBLY

NHAT0154

1. Check operation of forward clutch and overrun clutch.

a. Install bearing retainer on forward clutch drum.
b. Apply compressed air to oil hole of forward clutch drum.
c. Check to see that retaining plate moves to snap ring.
d. If retaining plate does not contact snap ring:

- D-ring might be damaged.
- Oil seal might be damaged.
- Fluid might be leaking past piston check ball.

2. Remove snap ring for forward clutch.
3. Remove drive plates, driven plates, retaining plate and dish plate for forward clutch.

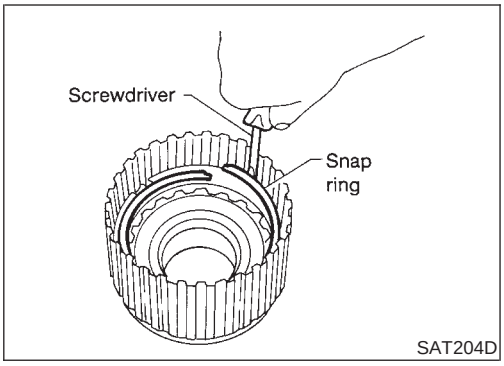

4. Remove snap ring for overrun clutch.
5. Remove drive plates, driven plates, retaining plate and dish plate for overrun clutch.

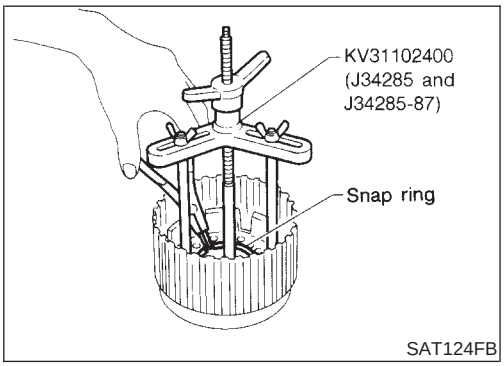

6. Set Tool on spring retainer and remove snap ring from forward clutch drum while compressing return springs.
- **Set Tool directly over return springs.**
- **Do not expand snap ring excessively.**

7. Remove spring retainer and return springs.
- **Do not remove return springs from spring retainer.**

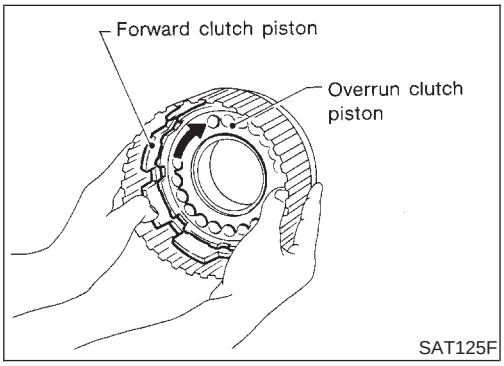

8. Remove forward clutch piston with overrun clutch piston from forward clutch drum by turning it.

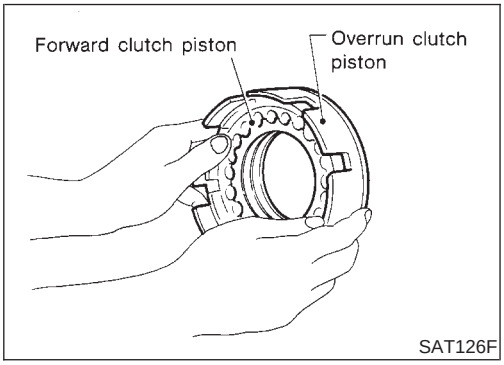

9. Remove overrun clutch piston from forward clutch piston by turning it.

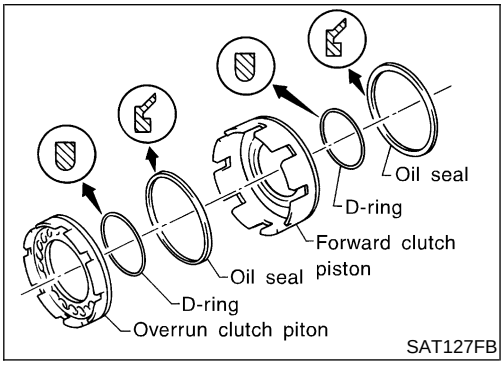

10. Remove D-rings and oil seals from forward clutch piston and overrun clutch piston.

INSPECTION

NHAT0155

Snap Rings, Spring Retainer and Return Springs

NHAT0155S01

- Check for deformation, fatigue or damage.
- Replace if necessary.
- **When replacing spring retainer and return springs, replace them as a set.**

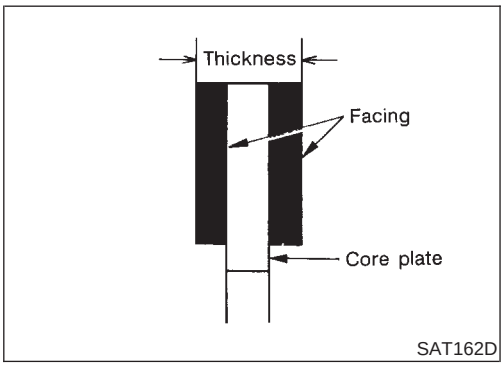

Forward Clutch and Overrun Clutch Drive Plates

NHAT0155S02

- Check facing for burns, cracks or damage.
- Measure thickness of facing.

  Thickness of drive plate:

  Forward clutch

  Standard value: 1.6 mm (0.063 in)

  Wear limit: 1.4 mm (0.055 in)

  Overrun clutch

  Standard value: 1.6 mm (0.063 in)

  Wear limit: 1.4 mm (0.055 in)
- If not within wear limit, replace.

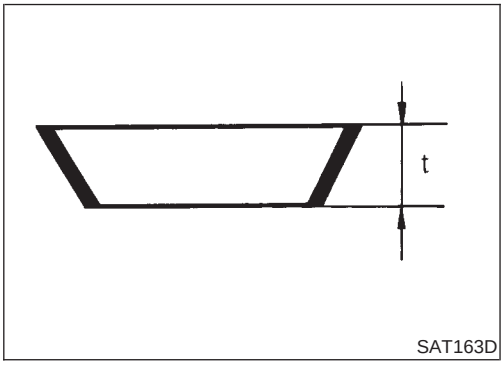

Forward Clutch and Overrun Clutch Dish Plates

NHAT0155S03

- Check for deformation or damage.
- Measure thickness of dish plate.

  Thickness of dish plate:

  Forward clutch 2.7 mm (0.106 in)

  Overrun clutch 2.7 mm (0.106 in)
- If deformed or fatigued, replace.

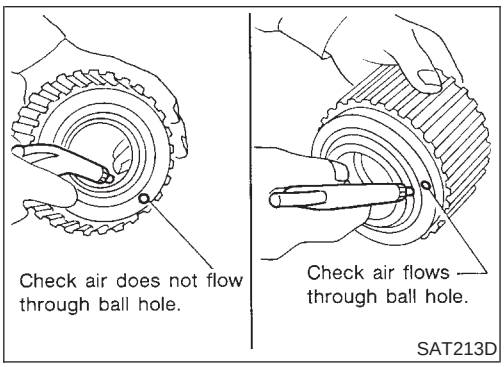

Forward Clutch Drum

NHAT0155S04

- Make sure that check balls are not fixed.
- Apply compressed air to check ball oil hole from outside of forward clutch drum. Make sure air leaks past ball.
- Apply compressed air to oil hole from inside of forward clutch drum. Make sure there is no air leakage.

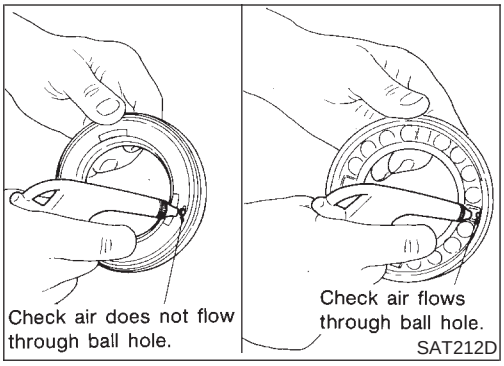

Overrun Clutch Piston

NHAT0155S05

- Make sure that check balls are not fixed.
- Apply compressed air to check ball oil hole opposite the return spring. Make sure there is no air leakage.
- Apply compressed air to oil hole on return spring side. Make sure that air leaks past ball.

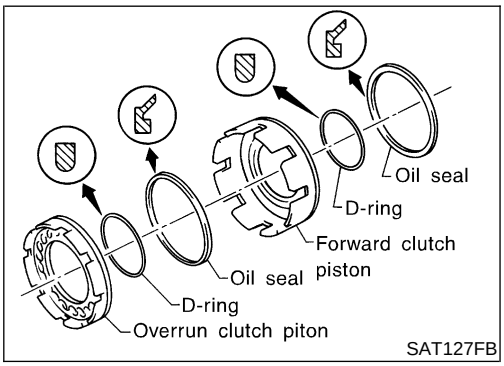

ASSEMBLY

NHAT0156

1. Install D-rings and oil seals on forward clutch piston and overrun clutch piston.
- **Take care with direction of oil seal.**
- **Apply ATF to both parts.**

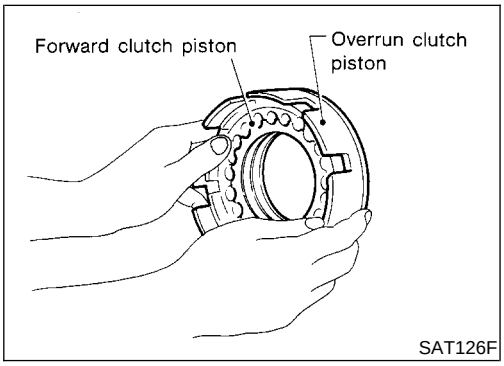

2. Install overrun clutch piston assembly on forward clutch piston by turning it slowly.
- **Apply ATF to inner surface of forward clutch piston.**

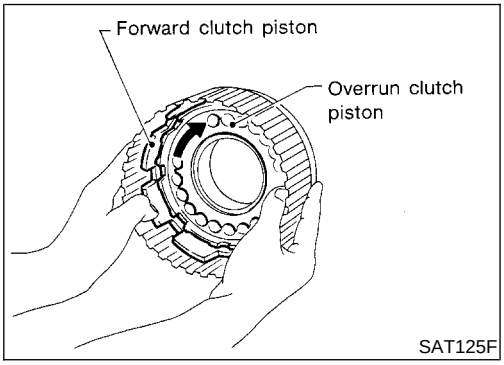

3. Install forward clutch piston assembly on forward clutch drum by turning it slowly.
- **Apply ATF to inner surface of drum.**

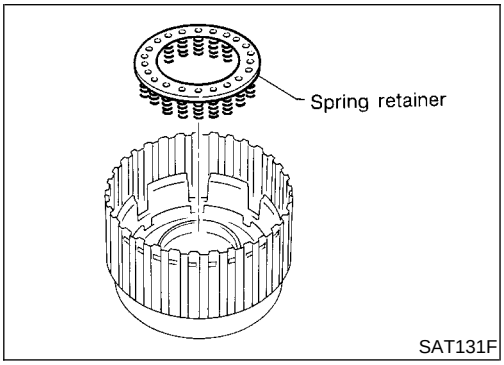

4. Install return spring on overrun clutch piston.

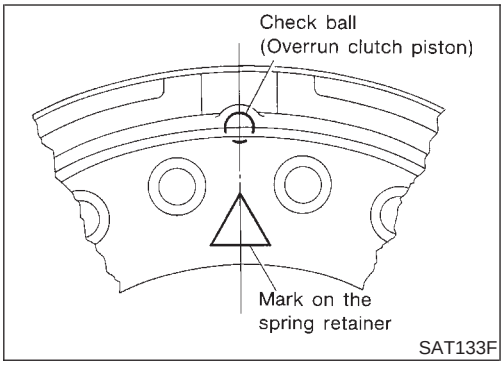

- Align the mark on spring retainer with check ball in overrun clutch piston.

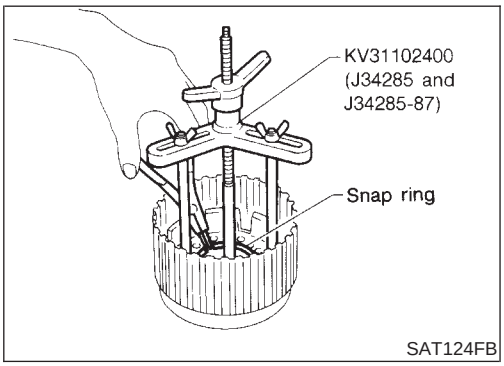

5. Set Tool on spring retainer and install snap ring while compressing return springs.
- **Set Tool directly over return springs.**

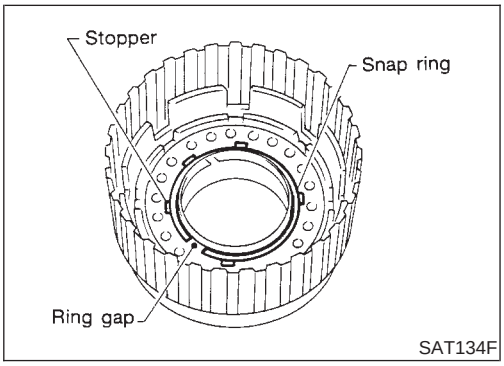

- **Do not align snap ring gap with spring retainer stopper.**

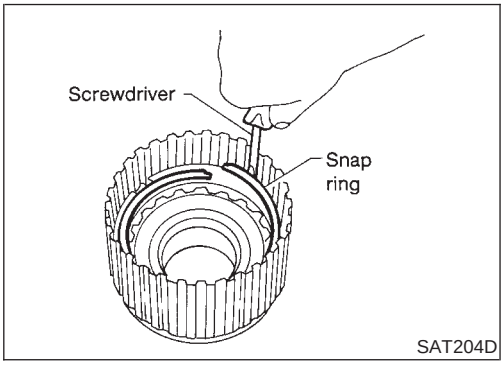

6. Install drive plates, driven plates, retaining plate and dish plate for overrun clutch.
- **Take care with order of plates.**
7. Install snap ring for overrun clutch.

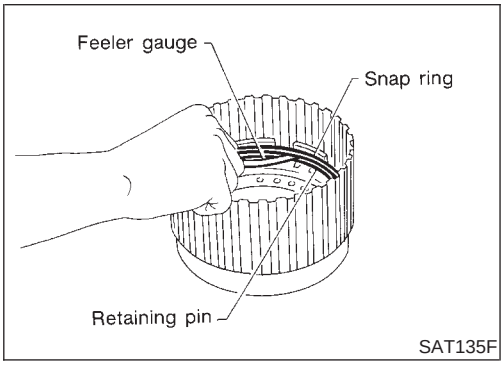

8. Measure clearance between overrun clutch retaining plate and snap ring.
   If not within allowable limit, select proper retaining plate.
   Specified clearance:
   Standard 0.7 - 1.1 mm (0.028 - 0.043 in)
   Allowable limit 1.7 mm (0.067 in)
   Overrun clutch retaining plate:
   Refer to SDS, AT-384.

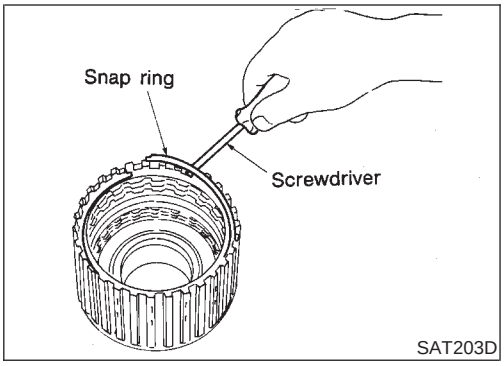

9. Install drive plates, driven plates, retaining plate and dish plate for forward clutch.
- **Take care with order of plates.**
10. Install snap ring for forward clutch.

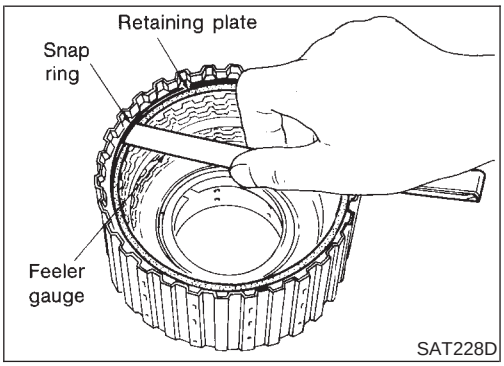

11. Measure clearance between forward clutch retaining plate and snap ring.
    If not within allowable limit, select proper retaining plate.
    Specified clearance:
    Standard 0.45 - 0.85 mm (0.0177 - 0.0335 in)
    Allowable limit 1.85 mm (0.0728 in)
    Forward clutch retaining plate:
    Refer to SDS, AT-384.

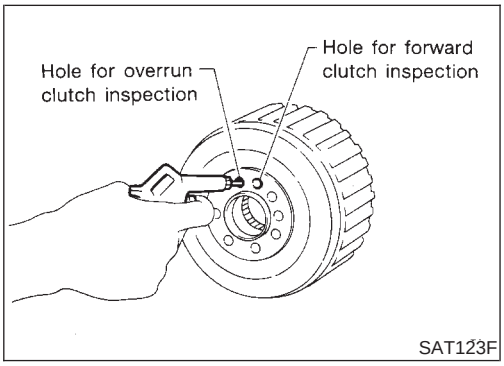

12. Check operation of forward clutch.
    Refer to "DISASSEMBLY", "Forward Clutch and Overrun Clutch", AT-336.
13. Check operation of overrun clutch.
    Refer to "DISASSEMBLY", "Forward Clutch and Overrun Clutch", AT-336.

Low & Reverse Brake

COMPONENTS

NHAT0157

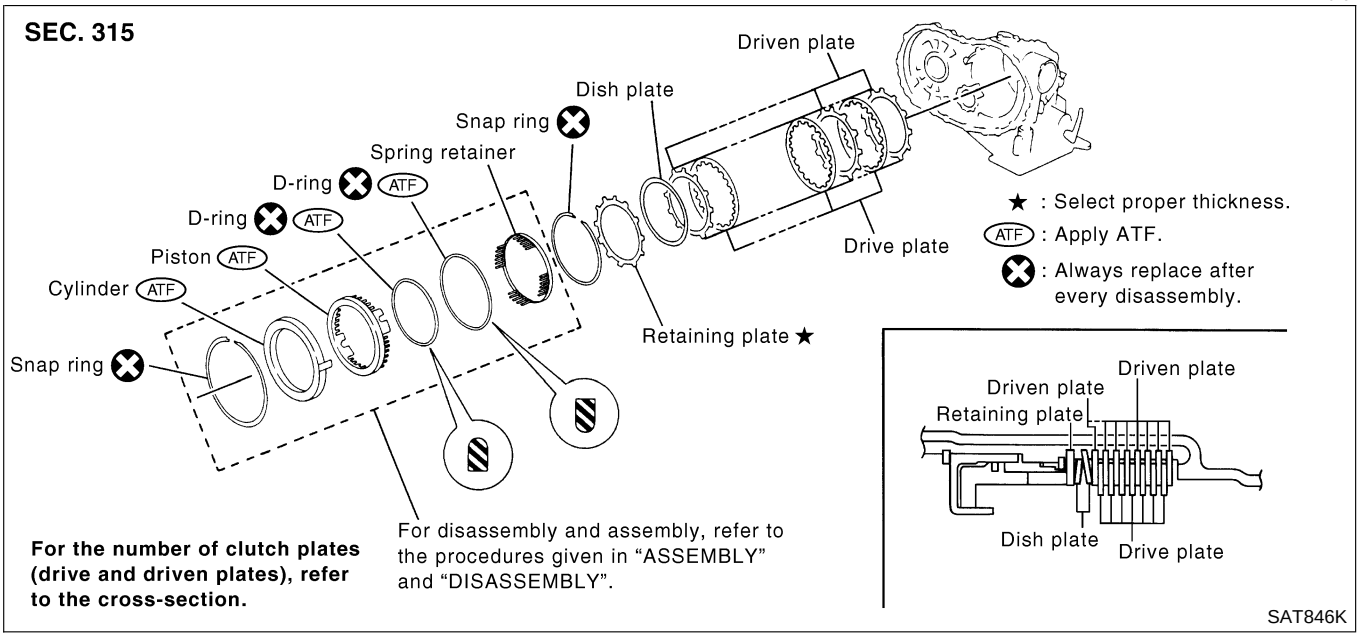

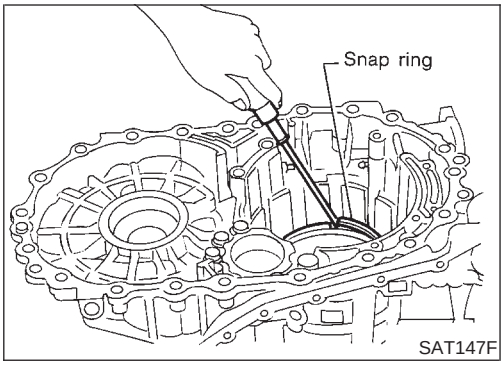

DISASSEMBLY

NHAT0158

1. Check operation of low & reverse brake.
a. Apply compressed air to oil hole of transmission case.
b. Check to see that retaining plate moves to snap ring.
c. If retaining plate does not contact snap ring:
- D-ring might be damaged.
- Fluid might be leaking past piston check ball.

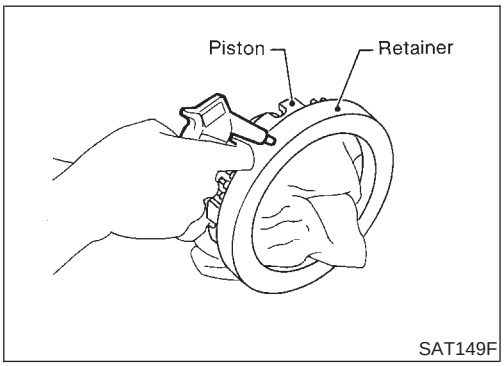

2. In order to remove piston, apply compressed air to oil hole of retainer while holding piston.
- **Apply air gradually and allow piston to come out evenly.**

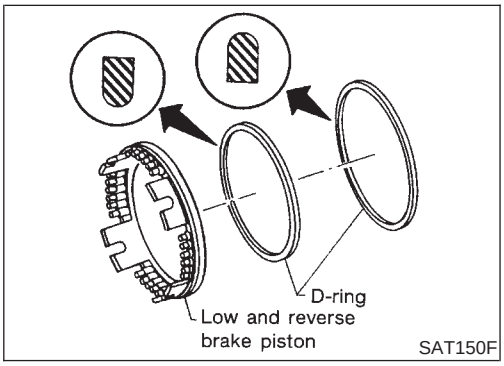

3. Remove D-rings from piston.

INSPECTION

NHAT0159

Low and Reverse Brake Snap Ring, Spring Retainer and Return Springs

NHAT0159S01

- Check for deformation, fatigue or damage.
  If necessary, replace.
- **When replacing spring retainer and return springs, replace them as a set.**

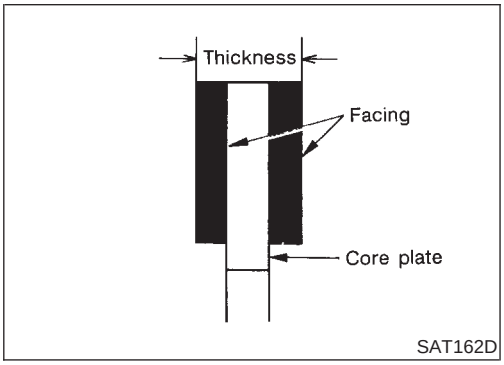

Low and Reverse Brake Drive Plate

NHAT0159S02

- Check facing for burns, cracks or damage.
- Measure thickness of facing.
  Thickness of drive plate:
  Standard value 1.8 mm (0.071 in)
  Wear limit 1.6 mm (0.063 in)
- If not within wear limit, replace.

ASSEMBLY

NHAT0160

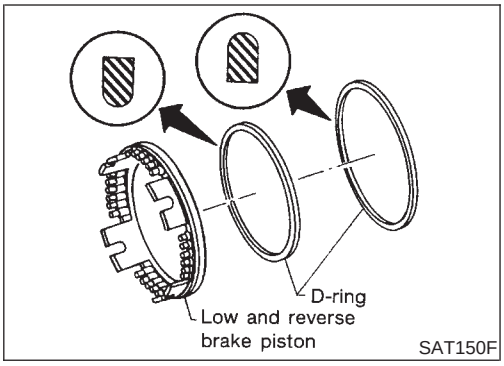

1. Install D-rings on piston.
- **Apply ATF to both parts.**

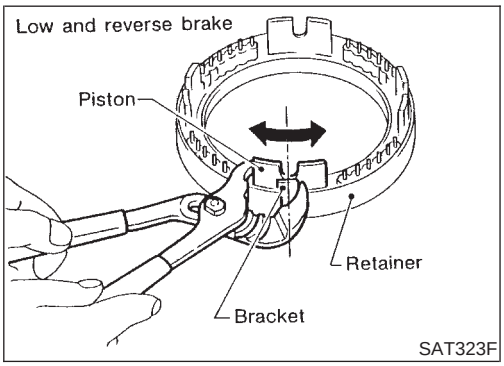

2. Set and align piston with retainer.
- **This operation is required in order to engage the protrusions of piston to return springs correctly.**
  Further procedures are given in "ASSEMBLY".

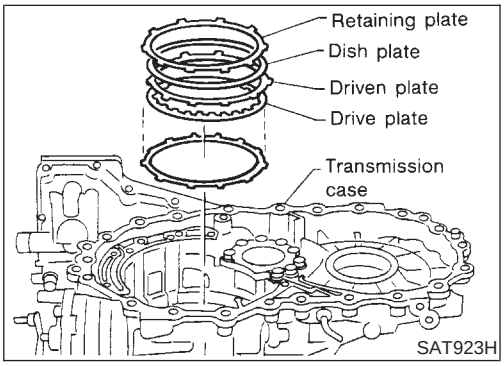

3. Install driven plates, drive plates, retaining plate and dish plate on transmission case.
- **Take care with order of plates and direction of dish plate.**

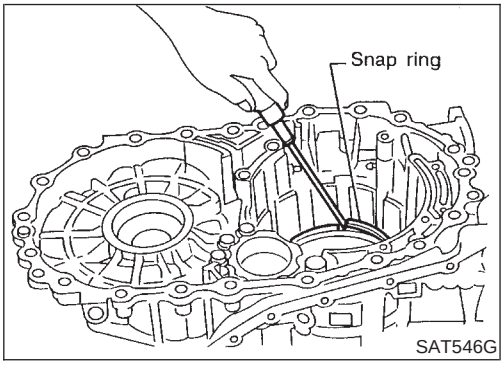

4. Install snap ring.

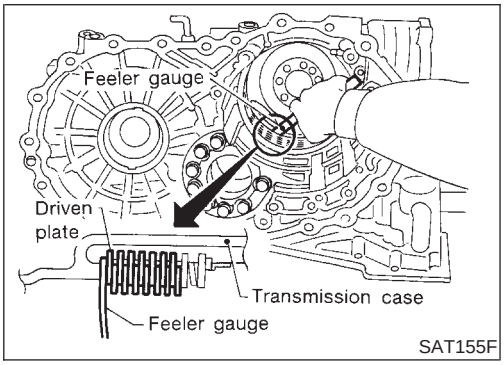

5. Measure clearance between driven plate and transmission case. If not within allowable limit, select proper retaining plate. (front side)

   Specified clearance:
   Standard 1.7 - 2.1 mm (0.067 - 0.083 in)
   Allowable limit 3.3 mm (0.130 in)
   Retaining plate:
   Refer to SDS, AT-385.

Rear Internal Gear, Forward Clutch Hub and Overrun Clutch Hub

COMPONENTS

NHAT0161

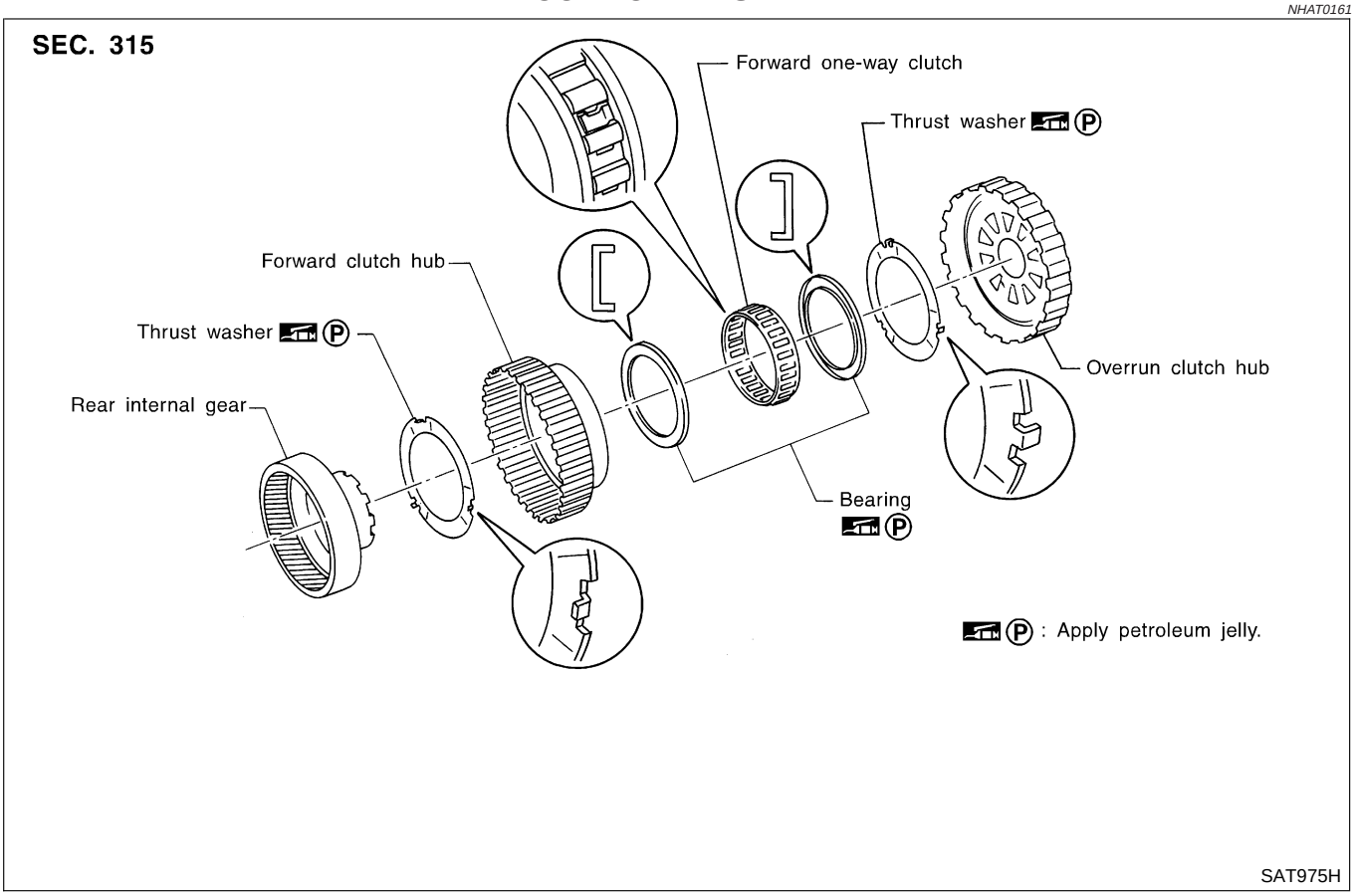

DISASSEMBLY

NHAT0162

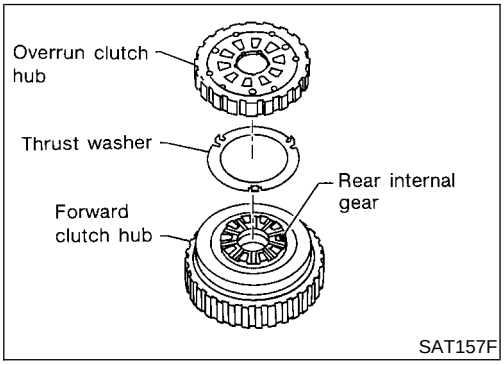

1. Remove overrun clutch hub and thrust washer from forward clutch hub.

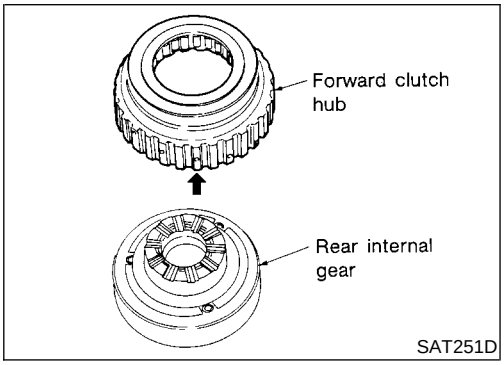

2. Remove forward clutch hub from rear internal gear.

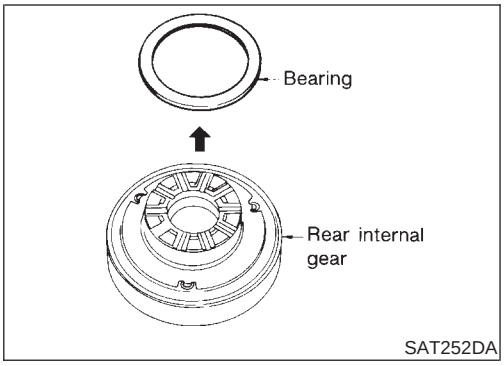

3. Remove bearing from rear internal gear.

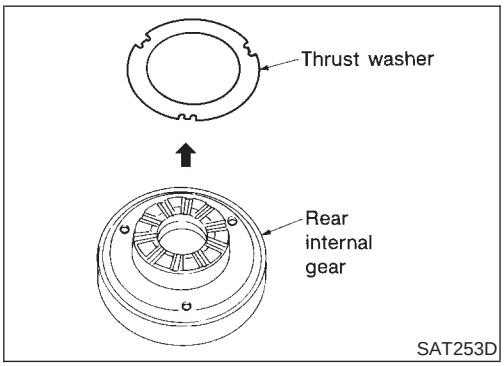

4. Remove thrust washer from rear internal gear.

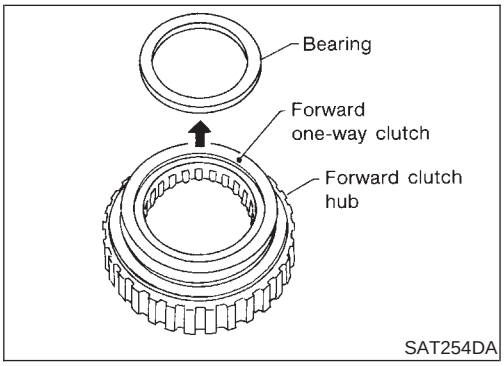

5. Remove bearing from forward one-way clutch.

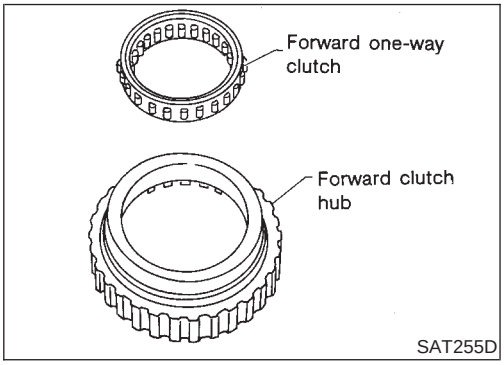

6. Remove forward one-way clutch from forward clutch hub.

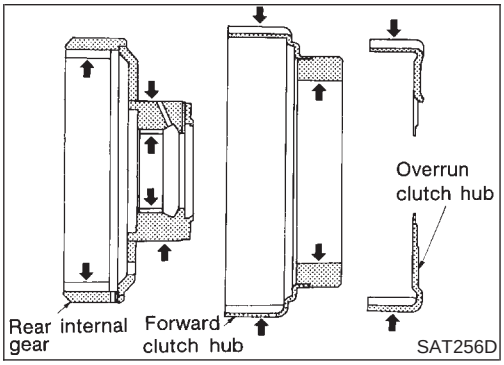

INSPECTION

NHAT0163

Rear Internal Gear, Forward Clutch Hub and Overrun Clutch Hub

NHAT0163S01

- Check rubbing surfaces for wear or damage.

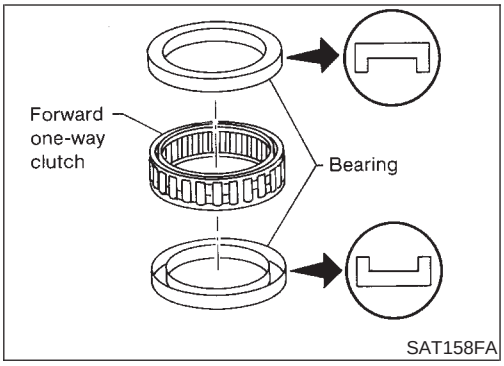

Bearings and Forward One-way Clutch

NHAT0163S02

- Check bearings for deformation and damage.
- Check forward one-way clutch for wear and damage.

ASSEMBLY

NHAT0164

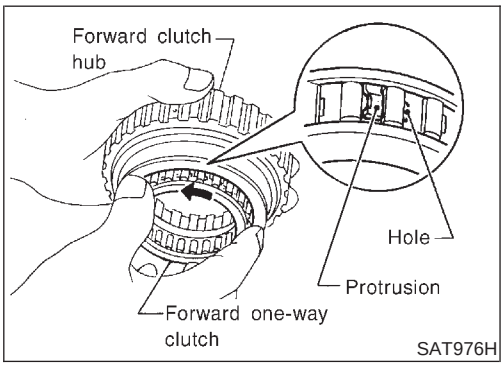

1. Install forward one-way clutch on forward clutch.
- **Take care with the direction of forward one-way clutch.**

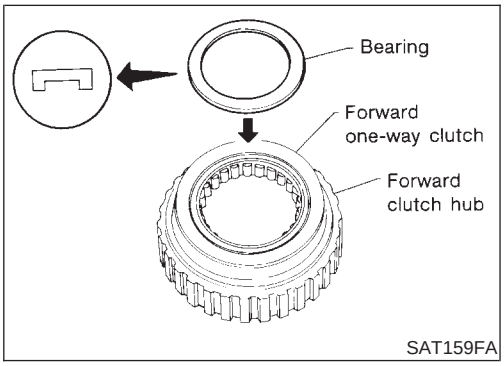

2. Install bearing on forward one-way clutch.
- **Apply petroleum jelly to bearing.**

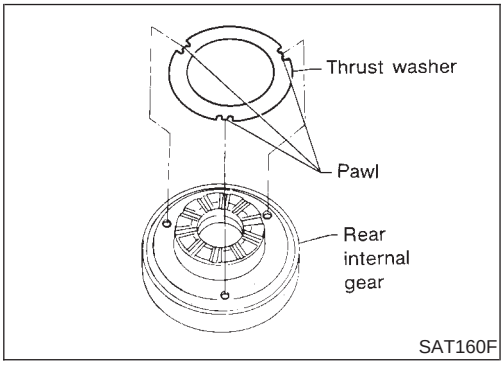

3. Install thrust washer on rear internal gear.
- **Apply petroleum jelly to thrust washer.**
- **Align hooks of thrust washer with holes of rear internal gear.**

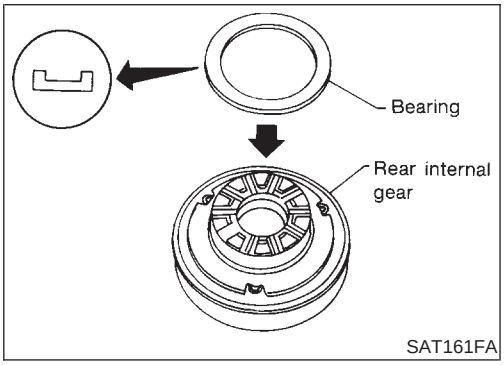

4. Install bearing on rear internal gear.
- **Apply petroleum jelly to bearing.**

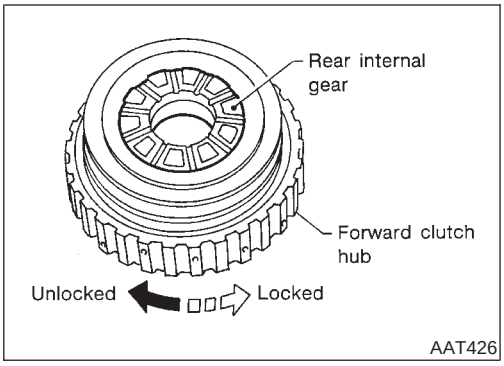

5. Install forward clutch hub on rear internal gear.
- **Check operation of forward one-way clutch.**
  Hold rear internal gear and turn forward clutch hub.
  Check forward clutch hub for correct locking and unlocking directions.
- **If not as shown in illustration, check installation direction of forward one-way clutch.**

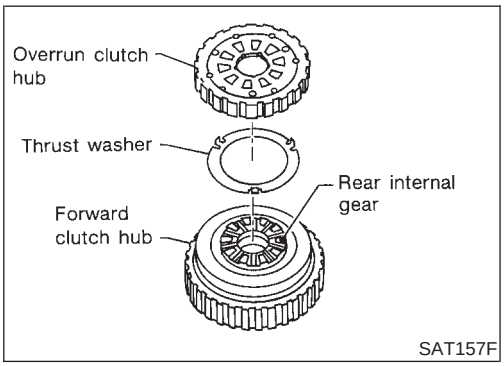

6. Install thrust washer and overrun clutch hub.
- **Apply petroleum jelly to thrust washer.**
- **Align hooks of thrust washer with holes of overrun clutch hub.**
- **Align projections of rear internal gear with holes of overrun clutch hub.**

Output Shaft, Idler Gear, Reduction Pinion Gear and Bearing Retainer

COMPONENTS

NHAT0165

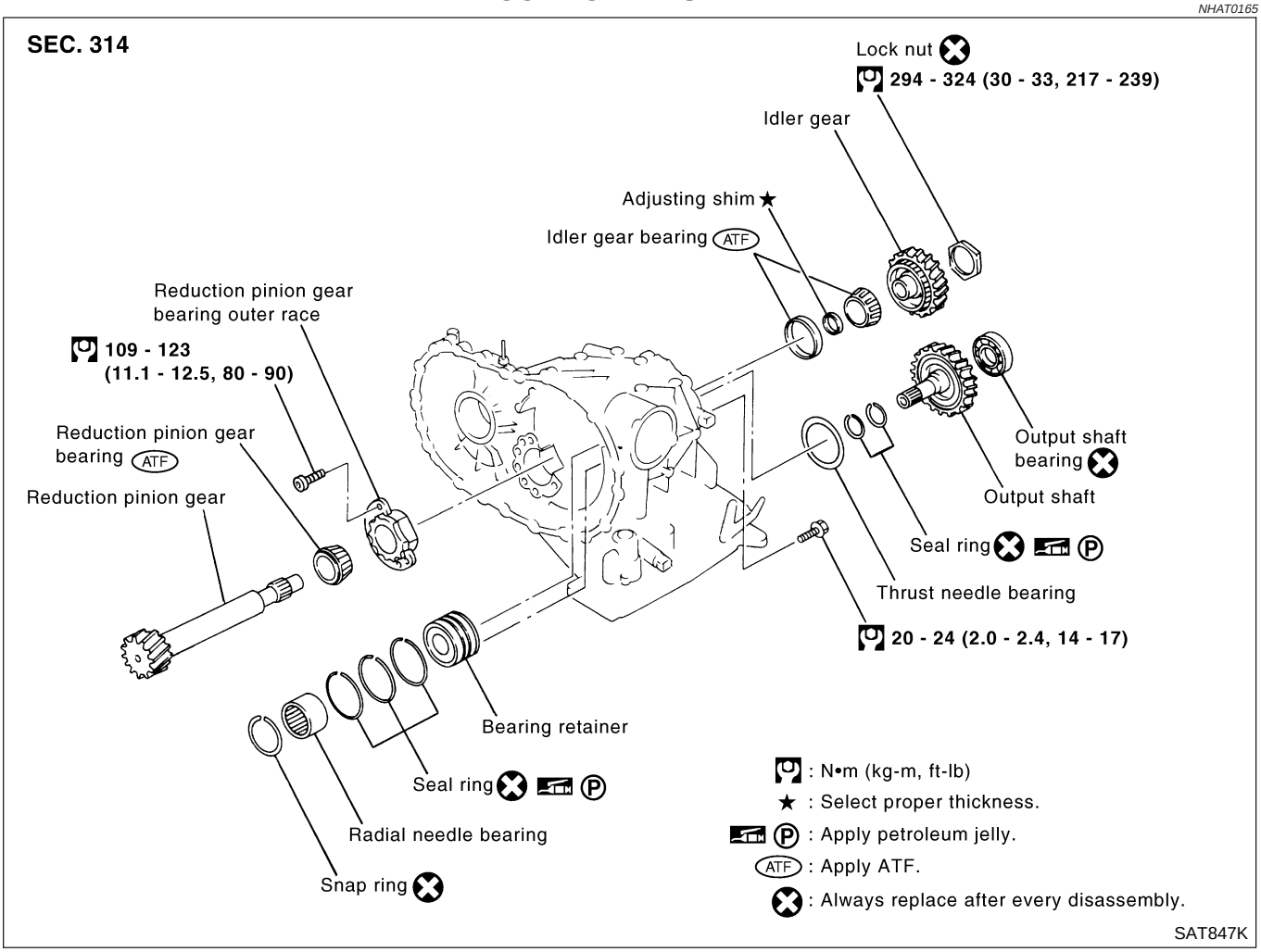

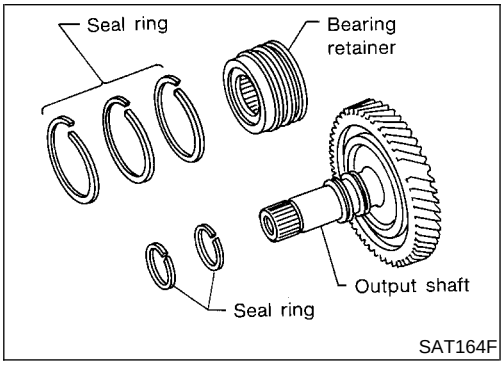

DISASSEMBLY

NHAT0166

1. Remove seal rings from output shaft and bearing retainer.

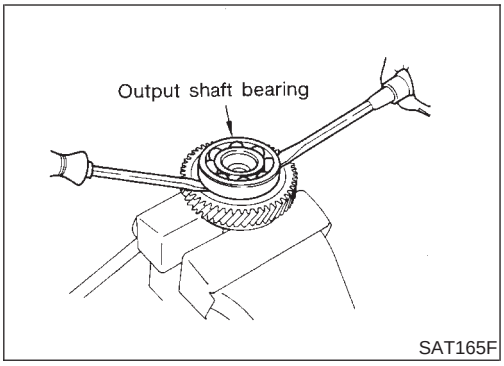

2. Remove output shaft bearing with screwdrivers.
- **Always replace bearing with a new one when removed.**
- **Do not damage output shaft.**

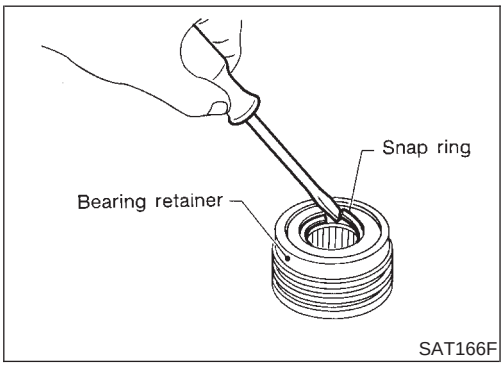

3. Remove snap ring from bearing retainer.

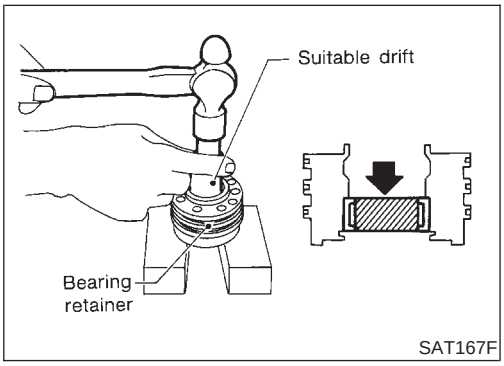

4. Remove needle bearing from bearing retainer.

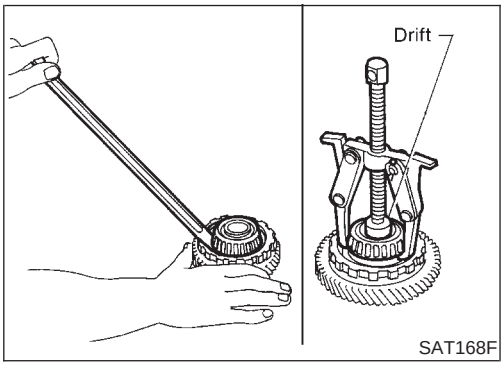

5. Remove idler gear bearing inner race from idler gear.

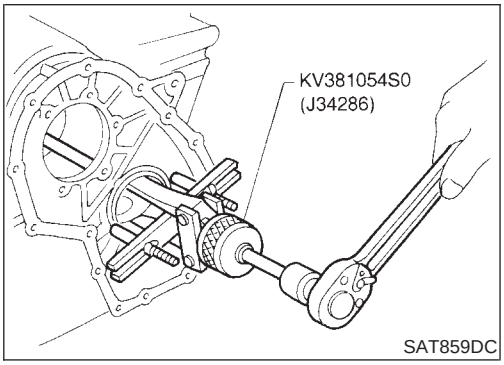

6. Remove idler gear bearing outer race from transmission case.

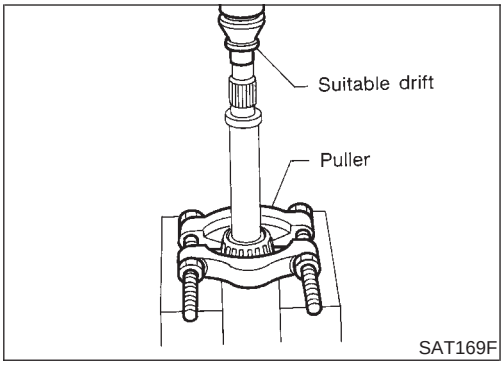

7. Press out reduction pinion gear bearing inner race from reduction pinion gear.

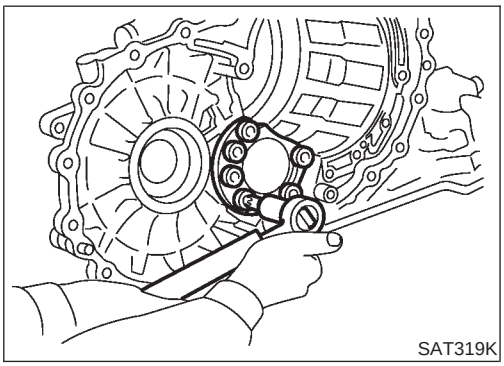

8. Remove reduction pinion gear bearing outer race from transmission case.

INSPECTION

NHAT0167

Output Shaft, Idler Gear and Reduction Pinion Gear

NHAT0167S01

- Check shafts for cracks, wear or bending.
- Check gears for wear, chips and cracks.

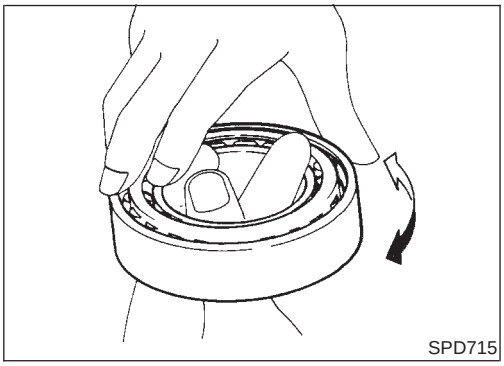

Bearing

NHAT0167S02

- Make sure bearings roll freely and are free from noise, cracks, pitting or wear.
- **When replacing taper roller bearing, replace outer and inner race as a set.**

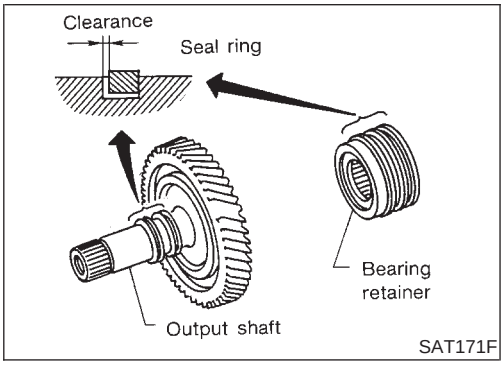

Seal Ring Clearance

NHAT0167S03

- Install new seal rings to output shaft.
- Measure clearance between seal ring and ring groove of output shaft.

  Standard clearance:
  0.10 - 0.25 mm (0.0039 - 0.0098 in)
  Allowable limit:
  0.25 mm (0.0098 in)
- If not within allowable limit, replace output shaft.
- Install new seal rings to bearing retainer.

- Measure clearance between seal ring and ring groove of bearing retainer.

  Standard clearance:
  0.10 - 0.30 mm (0.0039 - 0.0118 in)
  Allowable limit:
  0.30 mm (0.0118 in)
- If not within allowable limit, replace bearing retainer.

ASSEMBLY

NHAT0168

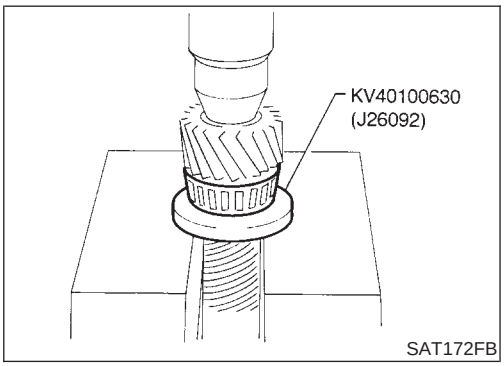

SAT172FB

1. Press reduction pinion gear bearing inner race on reduction pinion gear.

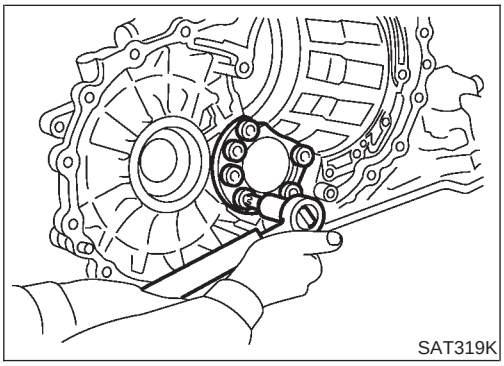
SAT319K

2. Install reduction pinion gear bearing outer race on transmission case.

   : 109 - 123 N·m (11.1 - 12.5 kg-m, 80 - 90 ft-lb)

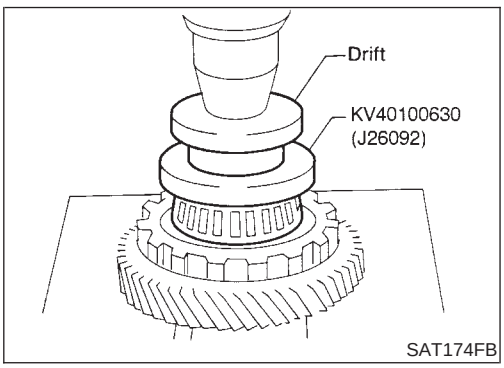

SAT174FB

3. Press idler gear bearing inner race on idler gear.

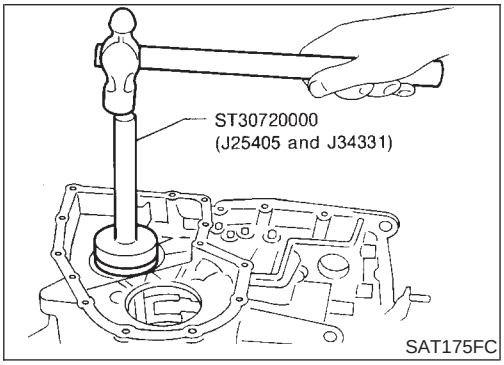

SAT175FC

4. Install idler gear bearing outer race on transmission case.

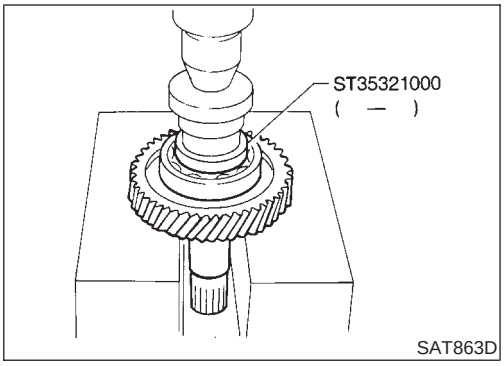

5. Press output shaft bearing on output shaft.

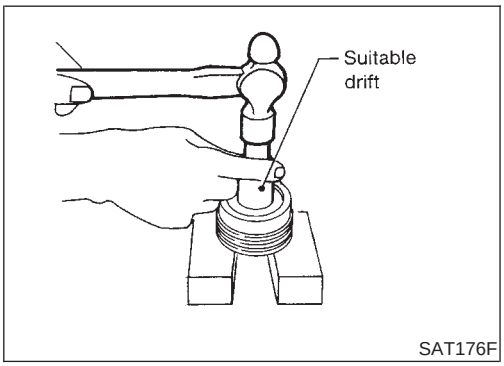

6. Press needle bearing on bearing retainer.

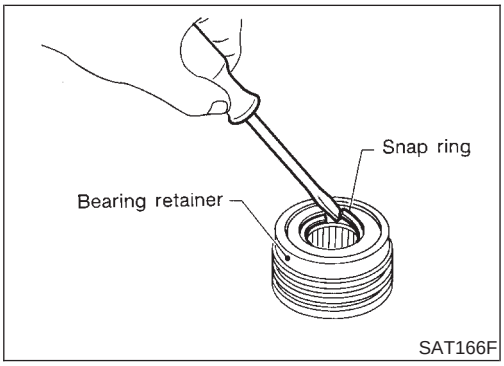

7. Install snap ring to bearing retainer.

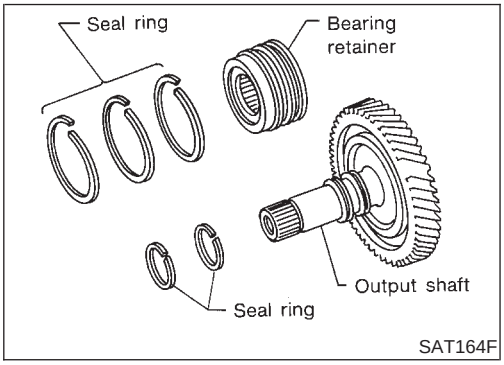

8. After packing ring grooves with petroleum jelly, carefully install new seal rings on output shaft and bearing retainer.

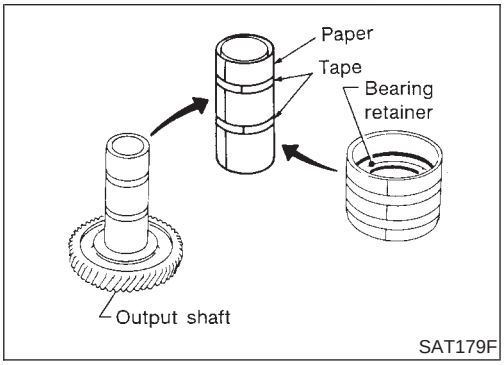

- **Roll paper around seal rings to prevent seal rings from spreading.**

Band Servo Piston Assembly

COMPONENTS

NHAT0169

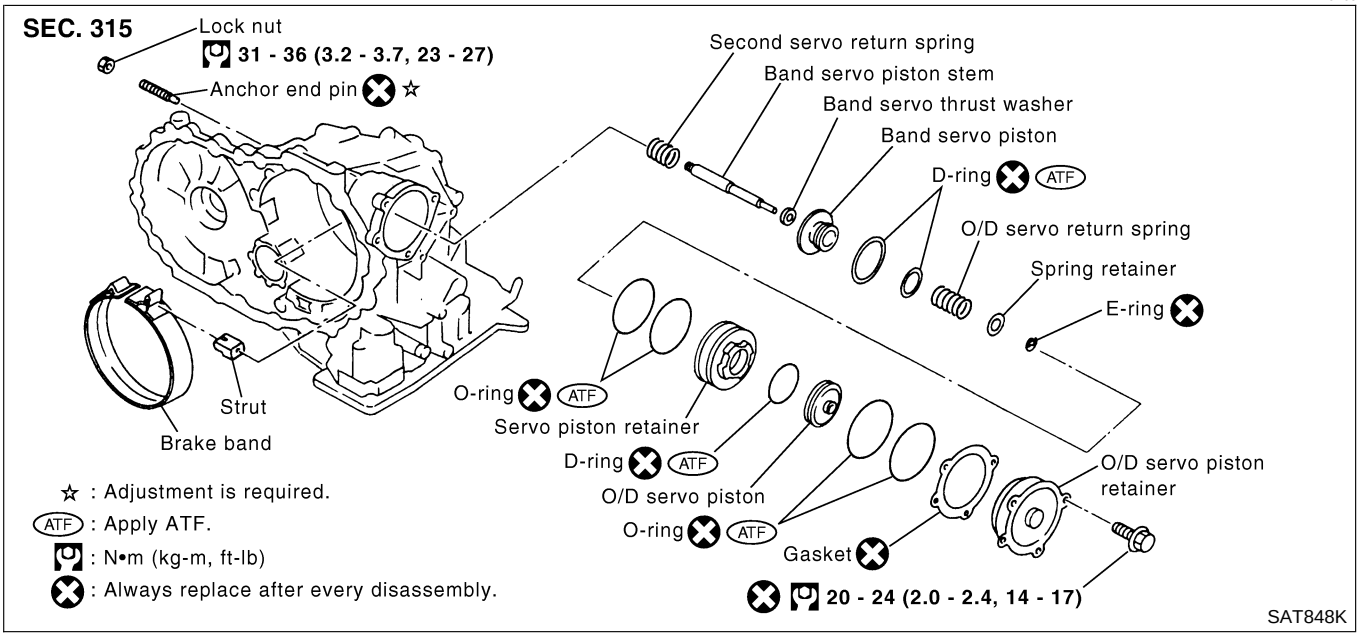

DISASSEMBLY

NHAT0170

1. Remove band servo piston fixing bolts.

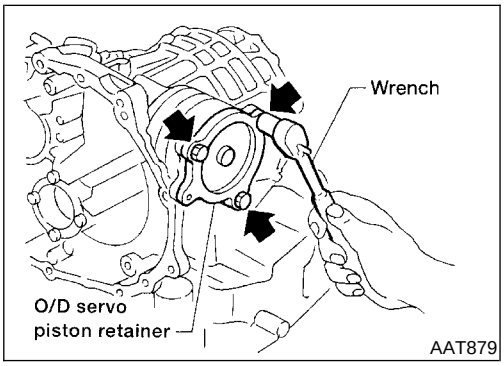

2. Apply compressed air to oil hole in transmission case to remove O/D servo piston retainer and band servo piston assembly.

- **Hold band servo piston assembly with a rag or nylon waste.**

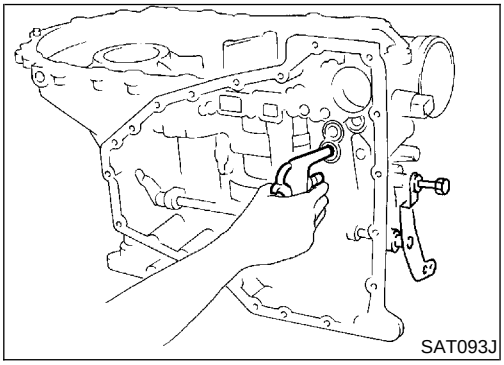

3. Apply compressed air to oil hole in O/D servo piston retainer to remove O/D servo piston from retainer.

- **Hold O/D band servo piston while applying compressed air.**

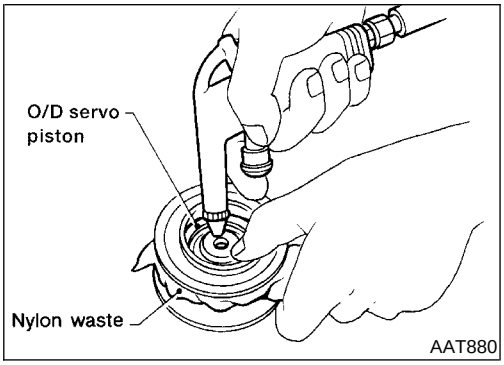

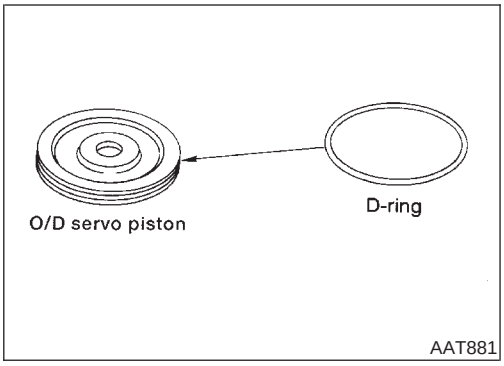

4. Remove D-ring from O/D servo piston.

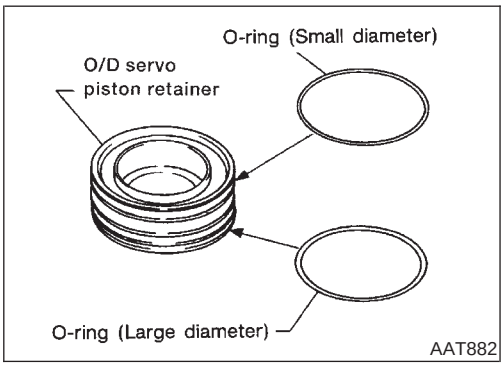

5. Remove O-rings from O/D servo piston retainer.

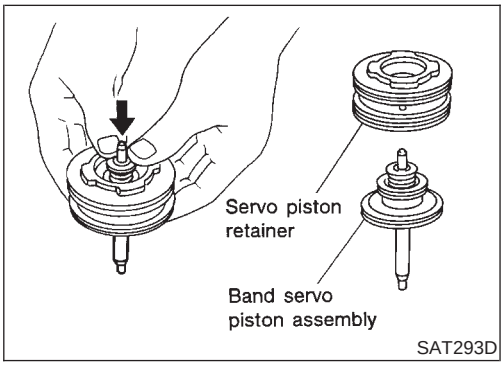

6. Remove band servo piston assembly from servo piston retainer by pushing it forward.

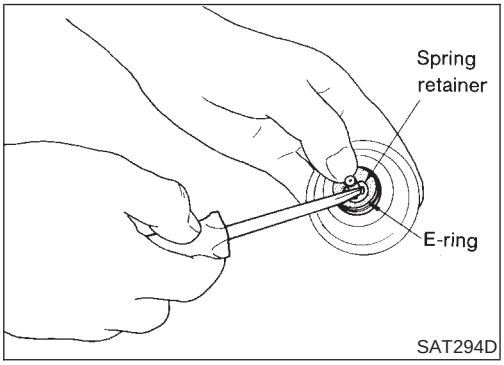

7. Place piston stem end on a wooden block. While pushing servo piston spring retainer down, remove E-ring.

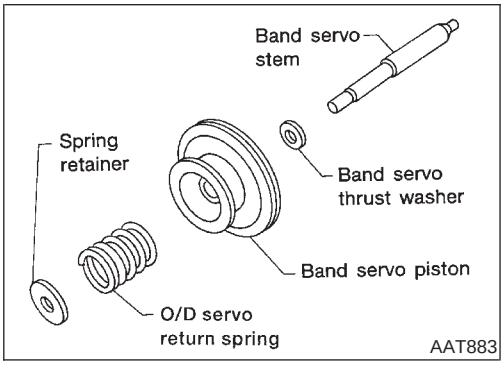

8. Remove O/D servo return spring, band servo thrust washer and band servo piston stem from band servo piston.

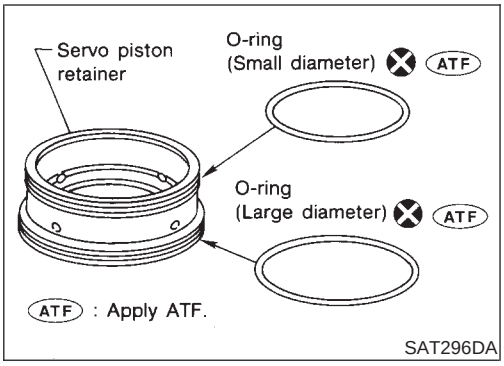

SAT296DA

9. Remove O-rings from servo piston retainer.

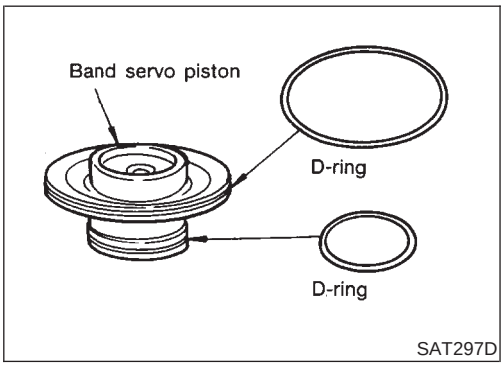

SAT297D

10. Remove D-rings from band servo piston.

INSPECTION

NHAT0171

Pistons, Retainers and Piston Stem

NHAT0171S01

- Check frictional surfaces for abnormal wear or damage.

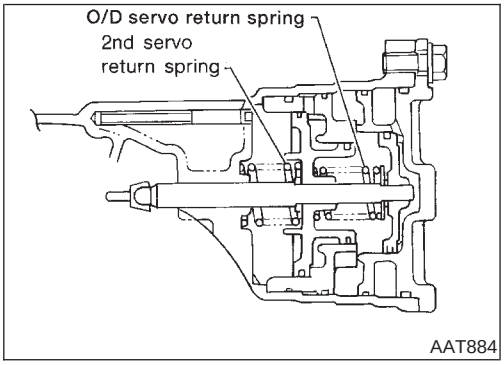

AAT884

Return Springs

NHAT0171S02

- Check for deformation or damage.
- Measure free length and outer diameter.

Inspection standard:
Refer to SDS, AT-388.

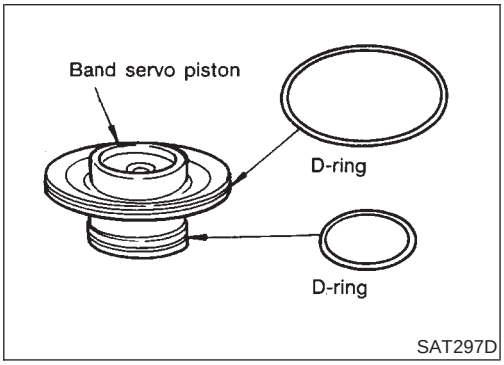

SAT297D

ASSEMBLY

NHAT0172

1. Install D-rings to servo piston retainer.

- **Apply ATF to D-rings.**
- **Pay attention to position of each O-ring.**

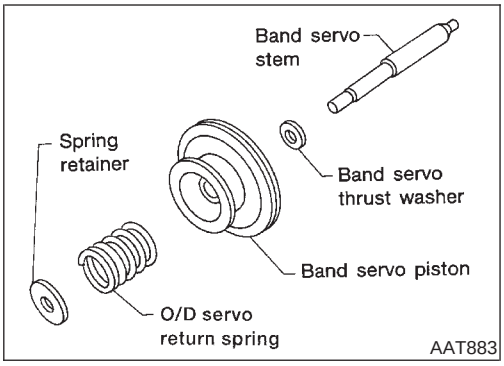

2. Install band servo piston stem, band servo thrust washer, O/D servo return spring and spring retainer to band servo piston.

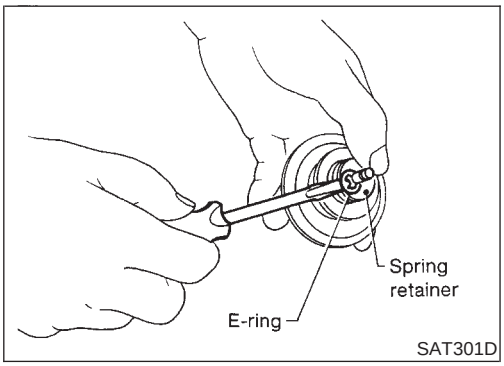

3. Place piston stem end on a wooden block. While pushing servo piston spring retainer down, install E-ring.

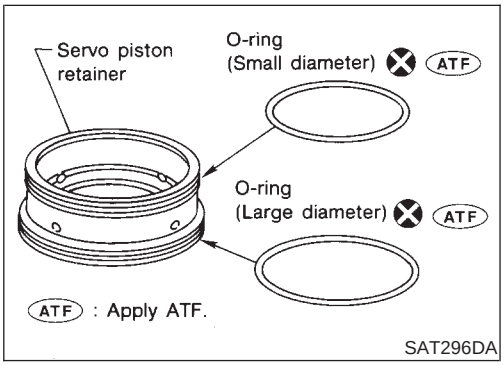

4. Install O-rings to servo piston retainer.
- **Apply ATF to O-rings.**
- **Pay attention to position of each O-ring.**

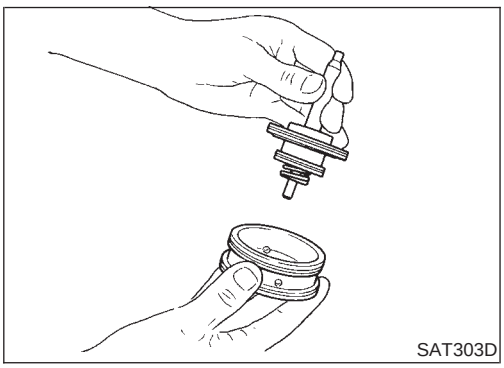

5. Install band servo piston assembly to servo piston retainer by pushing it inward.

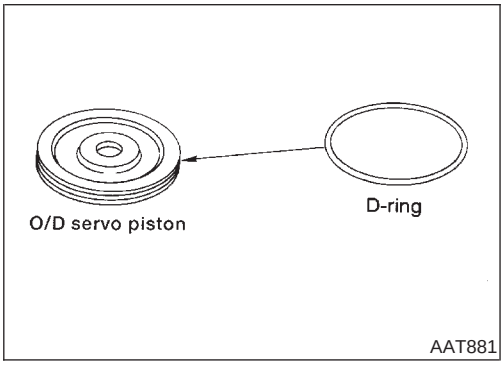

6. Install D-ring to O/D servo piston.
- **Apply ATF to D-ring.**

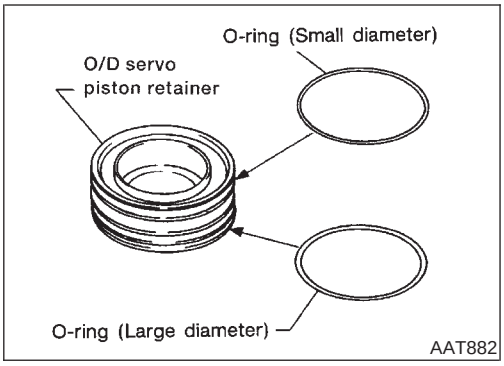

7. Install O-rings to O/D servo piston retainer.
- **Apply ATF to O-rings.**
- **Pay attention to position of each O-ring.**

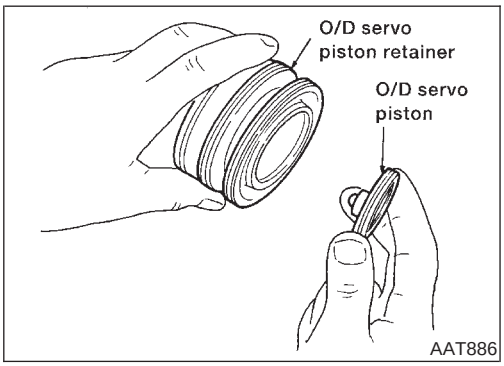

8. Install O/D servo piston to O/D servo piston retainer.

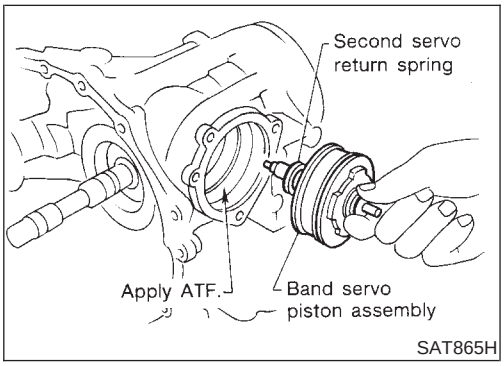

9. Install band servo piston assembly and 2nd servo return spring to transmission case.
- **Apply ATF to O-ring of band servo piston and transmission case.**

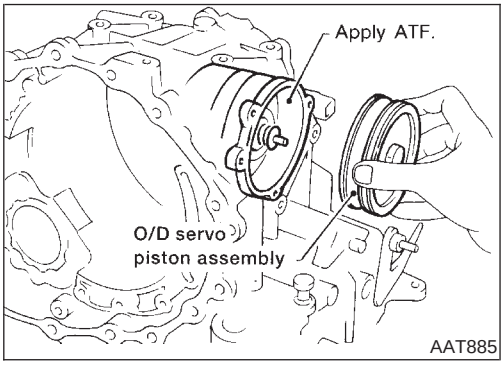

10. Install O/D servo piston assembly to transmission case.
- **Apply ATF to O-ring of band servo piston and transmission case.**

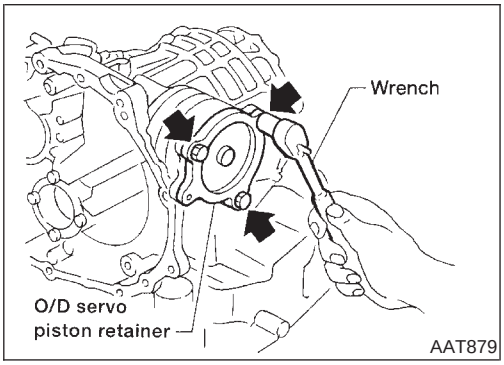

11. Install O/D servo piston retainer to transmission case. Refer to AT-353.

Final Drive

COMPONENTS

NHAT0173

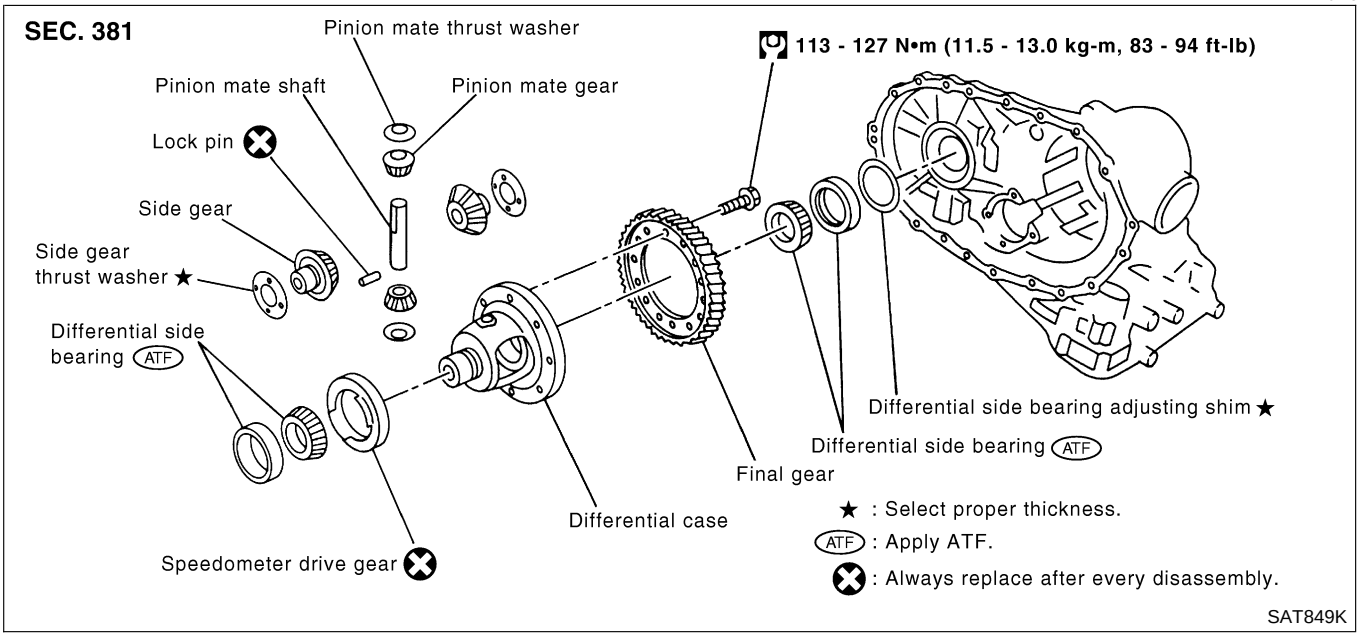

DISASSEMBLY

NHAT0174

1. Remove final gear.

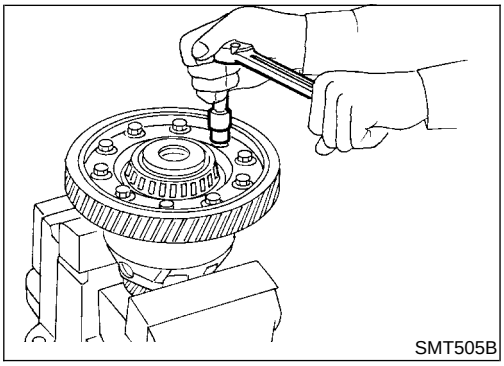

2. Press out differential side bearings.

- **Be careful not to mix up the right and left bearings.**

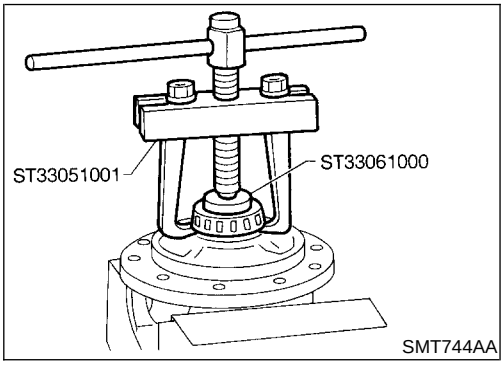

3. Remove differential side bearing outer race, and side bearing adjusting shim from transmission case.

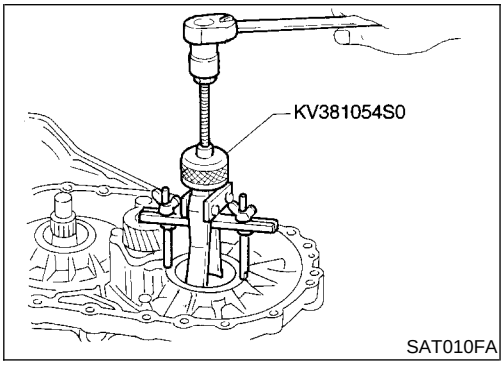

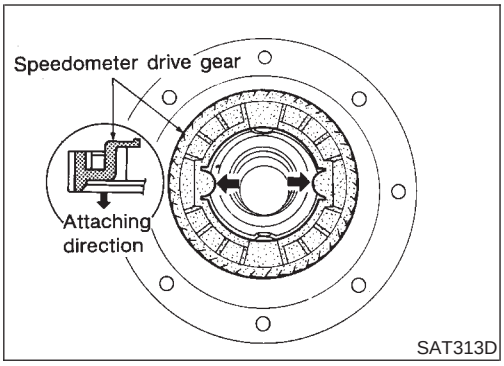

SAT313D

4. Remove speedometer drive gear.

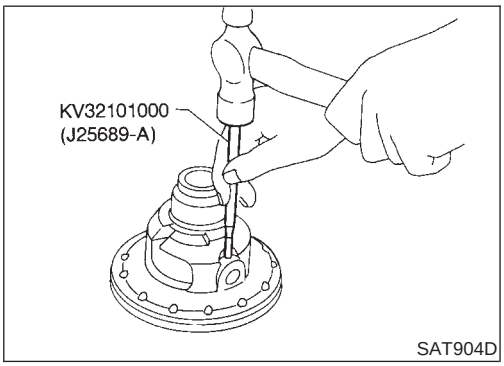

SAT904D

5. Drive out pinion mate shaft lock pin.

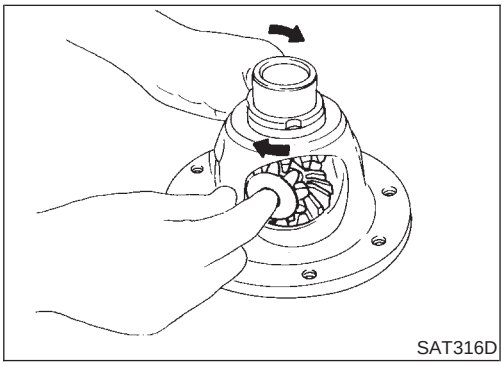
SAT316D

6. Draw out pinion mate shaft lock pin.
7. Remove pinion mate gears and side gears.

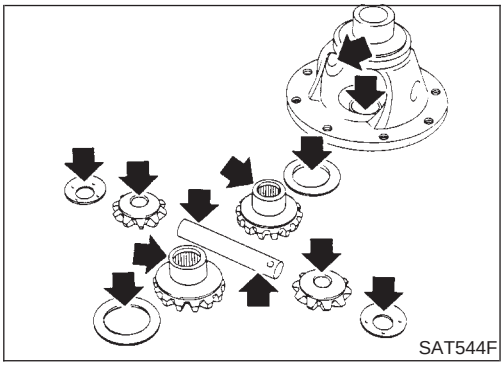
SAT544F

INSPECTION

NHAT0175

Gear, washer, shaft and case

NHAT0175S01

- Check mating surfaces of differential case, side gears and pinion mate gears.
- Check washers for wear.

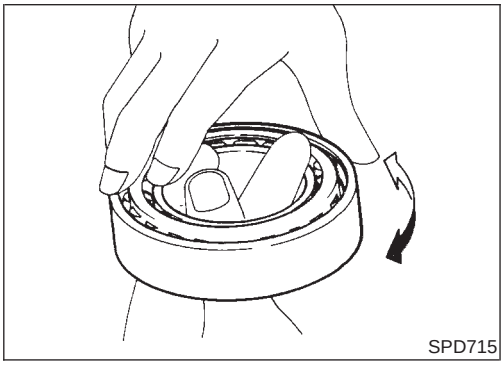
SPD715

Bearings

NHAT0175S03

- Make sure bearings roll freely and are free from noise, cracks, pitting or wear.
- **When replacing taper roller bearing, replace outer and inner race as a set.**

ASSEMBLY

NHAT0176

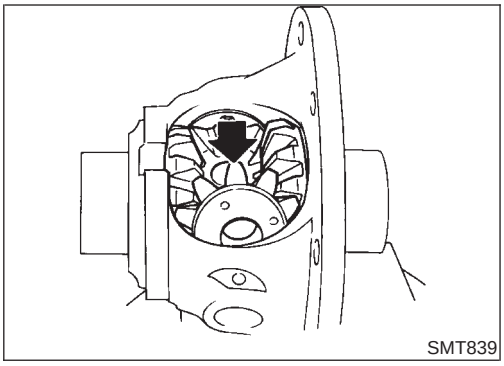
SMT839

1. Attach side gear thrust washers to side gears, then install pinion mate thrust washers and pinion mate gears in place.

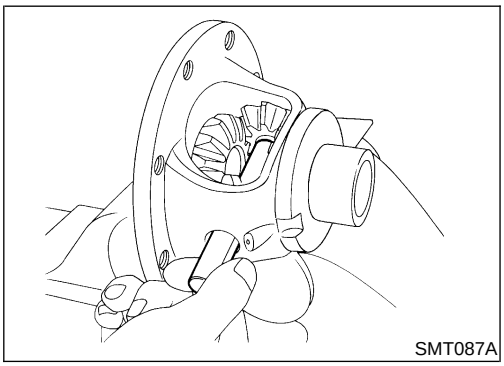
SMT087A

2. Insert pinion mate shaft.

- **When inserting, be careful not to damage pinion mate thrust washers.**

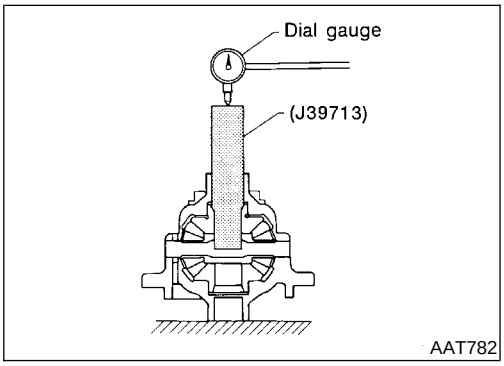

AAT782

3. Measure clearance between side gear and differential case with washers following the procedure below:

a. Set Tool and dial indicator on side gear.

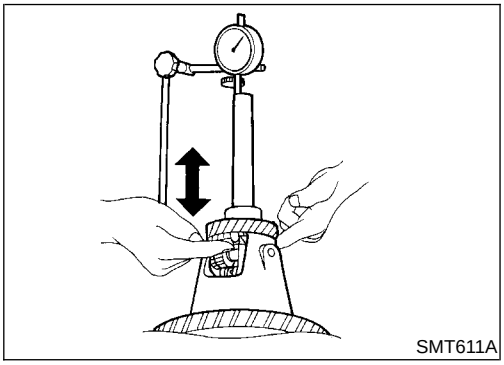
SMT611A

b. Move side gear up and down to measure dial indicator deflection. Always measure indicator deflection on both side gears.

Clearance between side gear and differential case with washers:

0.1 - 0.2 mm (0.004 - 0.008 in)

c. If not within specification, adjust clearance by changing thickness of side gear thrust washers.

Side gear thrust washer:

Refer to SDS, AT-385.

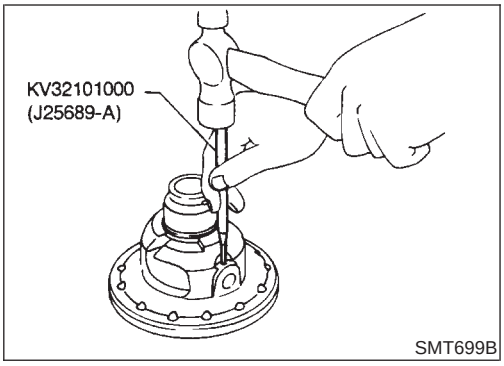

4. Install lock pin.
- **Make sure that lock pin is flush with case.**

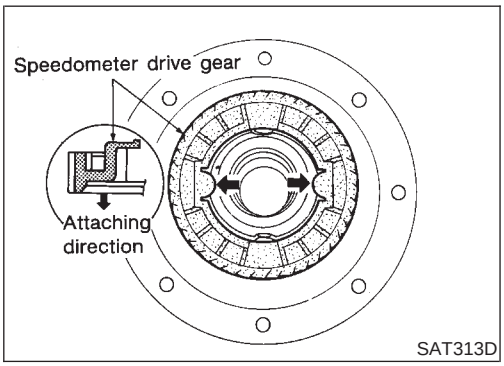

5. Install speedometer drive gear on differential case.
- **Align the projection of speedometer drive gear with the groove of differential case.**

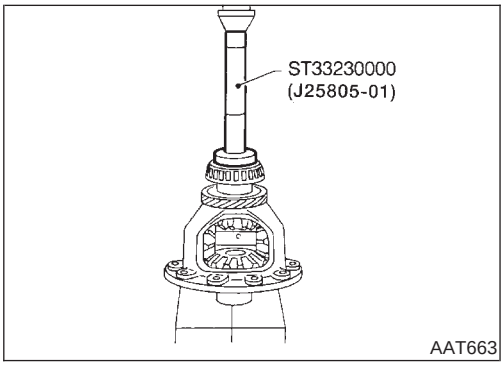

6. Press on differential side bearings.

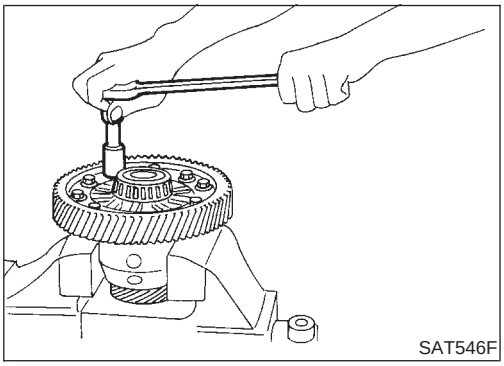

7. Install final gear and tighten fixing bolts in a crisscross pattern.

Assembly (1)

NHAT0177

1. Install differential side oil seals on transmission case and converter housing.

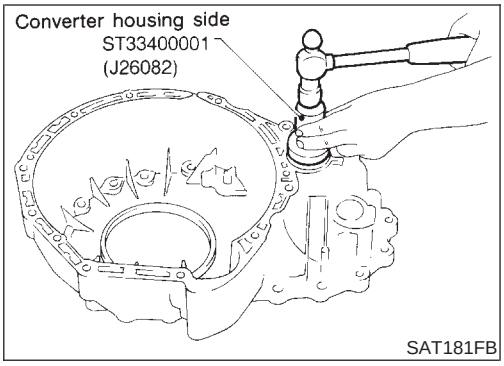

SAT181FB

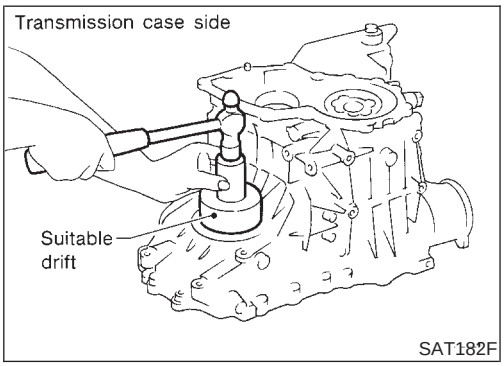

SAT182F

2. Install parking actuator support to transmission case. Tighten parking actuator support bolts to the specified torque. Refer to AT-288.

- **Pay attention to direction of parking actuator support.**

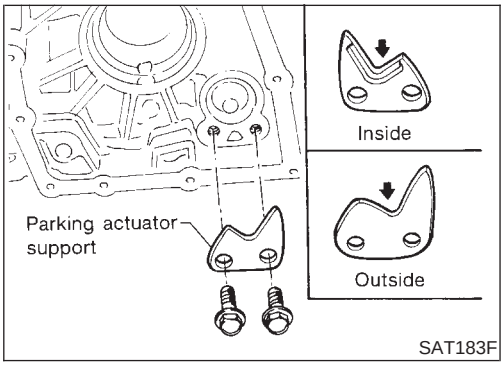

SAT183F

3. Install parking pawl on transmission case and fix it with parking shaft.
4. Install return spring.

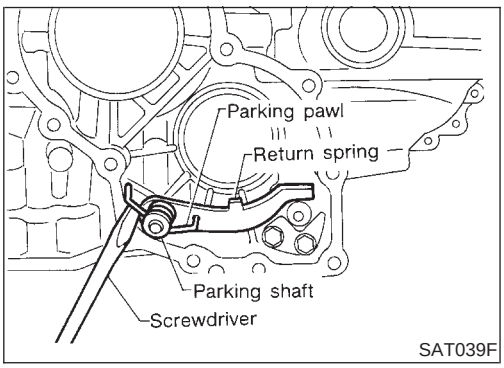

SAT039F

Adjustment (1)

NHAT0178

DIFFERENTIAL SIDE BEARING PRELOAD

NHAT0178S01

1. Install differential side bearing outer race without adjusting shim on transmission case.
2. Install differential side bearing outer race on converter housing.

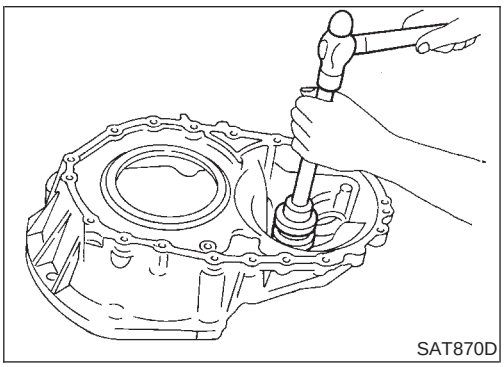
SAT870D

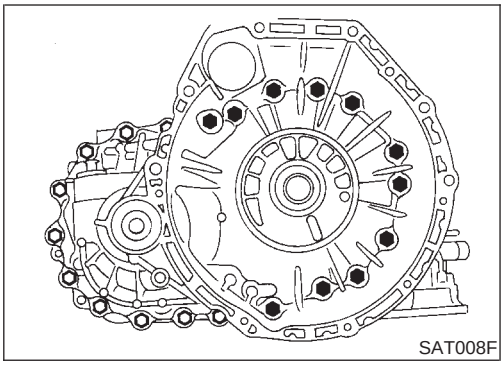
SAT008F

3. Place final drive assembly on transmission case.
4. Install transmission case on converter housing. Tighten transmission case fixing bolts to the specified torque. Refer to AT-288.

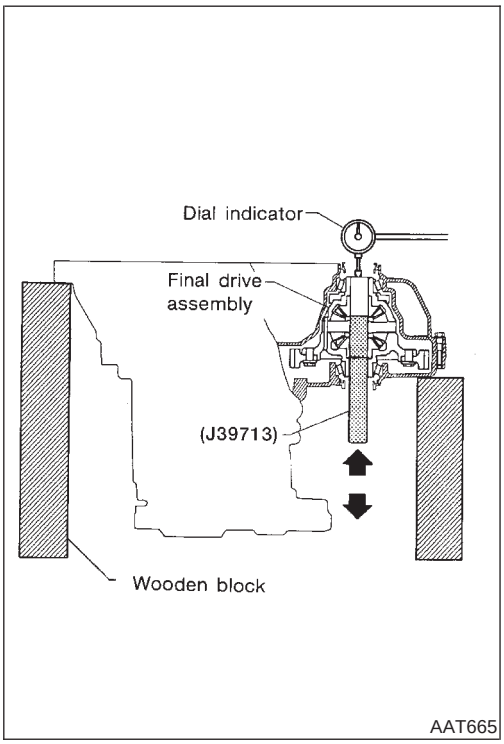

AAT665

5. Attach dial indicator on differential case at converter housing side.
6. Insert Tool into differential side gear from transmission case side.
7. Move Tool up and down and measure dial indicator deflection.
8. Select proper thickness of differential side bearing adjusting shim(s).
   Suitable shim thickness = Dial indicator deflection + Specified bearing preload
   Differential side bearing preload adjusting shim:
   Refer to SDS, AT-386.
   Bearing preload:
   0.05 - 0.09 mm (0.0020 - 0.0035 in)

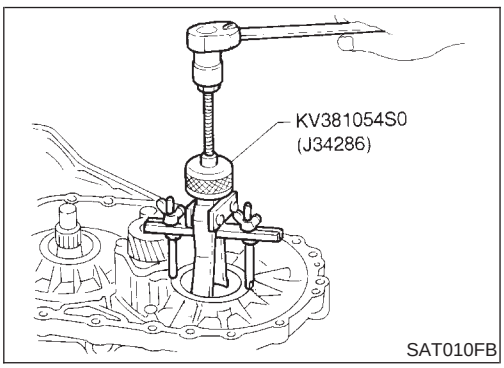

SAT010FB

9. Remove converter housing from transmission case.
10. Remove final drive assembly from transmission case.
11. Remove differential side bearing outer race from transmission case.
12. Reinstall differential side bearing outer race and shim(s) selected from SDS table on transmission case.
13. Reinstall converter housing on transmission case and tighten transmission case fixing bolts to the specified torque. Refer to AT-288.

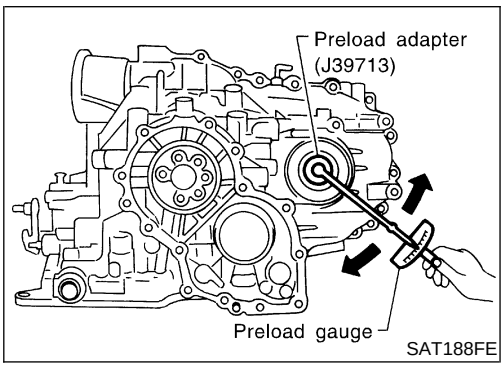

SAT188FE

14. Insert Tool and measure turning torque of final drive assembly.
- **Turn final drive assembly in both directions several times to seat bearing rollers correctly.**
  Turning torque of final drive assembly (New bearing):
  0.78 - 1.37 N·m (8.0 - 14.0 kg-cm, 6.9 - 12.2 in-lb)
- **When old bearing is used again, turning torque will be slightly less than the above.**
- **Make sure torque is close to the specified range.**
  Preload adapter:
  RE4F04B-(J39713)

REDUCTION PINION GEAR BEARING PRELOAD

NHAT0178S02

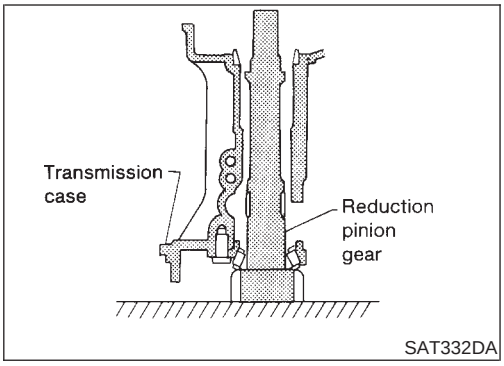

1. Remove transmission case and final drive assembly from converter housing.
2. Select proper thickness of reduction pinion gear bearing adjusting shim using the following procedures.

a. Place reduction pinion gear on transmission case as shown.

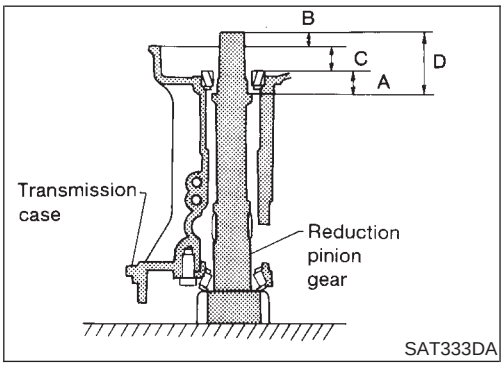

b. Place idler gear bearing on transmission case.

c. Measure dimensions "B" "C" and "D" and calculate dimension "A".

A = D − (B + C)

"A": Distance between the surface of idler gear bearing inner race and the adjusting shim mating surface of reduction pinion gear.

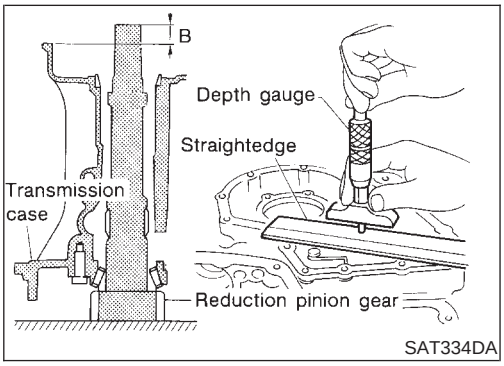

- Measure dimension "B" between the end of reduction pinion gear and the surface of transmission case.
- **Measure dimension "B" in at least two places.**

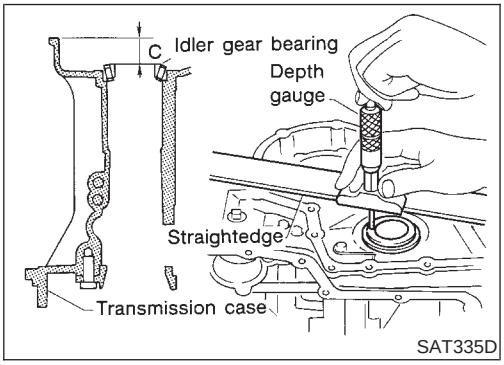

- Measure dimension "C" between the surface of idler gear bearing inner race and the surface of transmission case.
- **Measure dimension "C" in at least two places.**

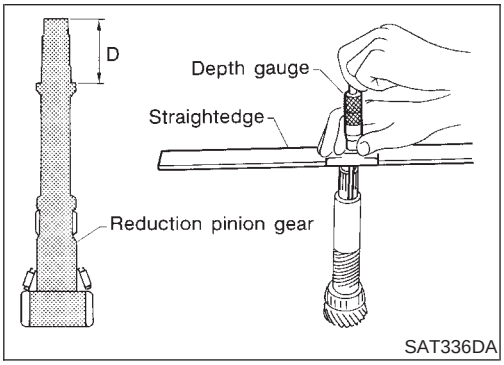

- Measure dimension "D" between the end of reduction pinion gear and the adjusting shim mating surface of reduction pinion gear.
- **Measure dimension "D" in at least two places.**
- Calculate dimension "A".

A = D − (B + C)

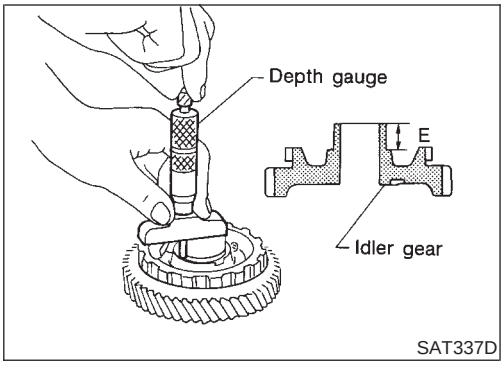

d. Measure dimension "E" between the end of idler gear and the idler gear bearing inner race mating surface of idler gear.

- **Measure dimension "E" in at least two places.**

e. Select proper thickness of reduction pinion gear bearing adjusting shim.

Proper shim thickness = A − E − 0.05 mm (0.0020 in)*

(* ... Bearing preload)

Reduction pinion gear bearing adjusting shim:

Refer to SDS, AT-387.

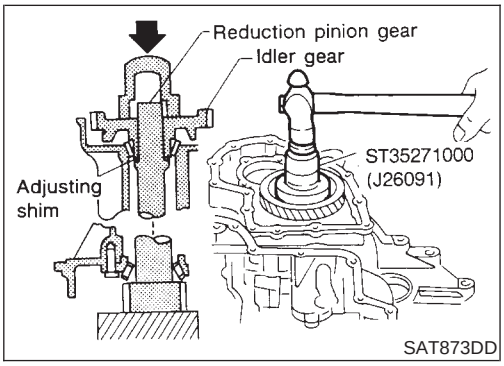

3. Install reduction gear and reduction gear bearing adjusting shim selected in step 2-e on transmission case.
4. Press idler gear bearing inner race on idler gear.
5. Press idler gear on reduction gear.

- **Press idler gear until idler gear fully contacts adjusting shim.**

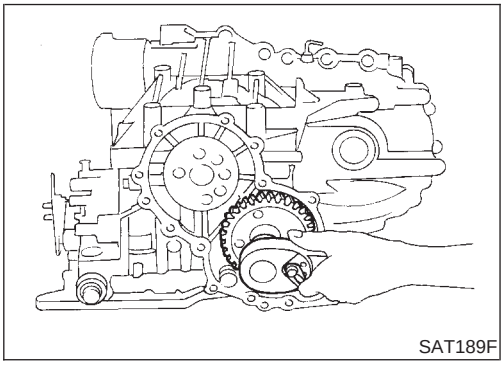

6. Tighten idler gear lock nut to the specified torque. Refer to AT-348.

- **Lock idler gear with parking pawl when tightening lock nut.**

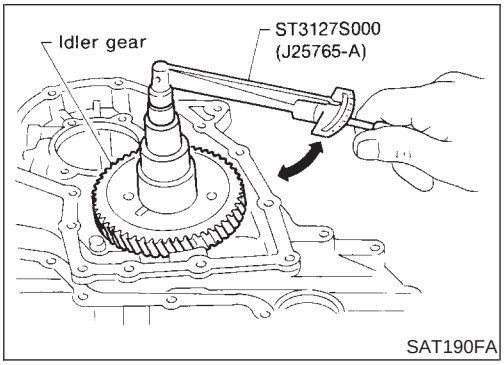

7. Measure turning torque of reduction pinion gear.

- **When measuring turning torque, turn reduction pinion gear in both directions several times to seat bearing rollers correctly.**

Turning torque of reduction pinion gear:

0.05 - 0.39 N·m (0.5 - 4.0 kg-cm, 0.43 - 3.47 in-lb)

- **If turning torque is out of specification, decrease or increase thickness of reduction pinion gear bearing adjusting shim.**

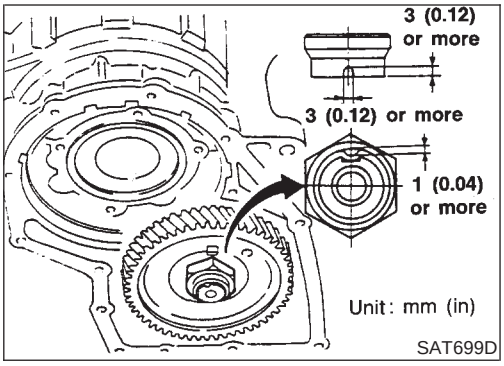

8. After properly adjusting turning torque, clinch idler gear lock nut as shown.

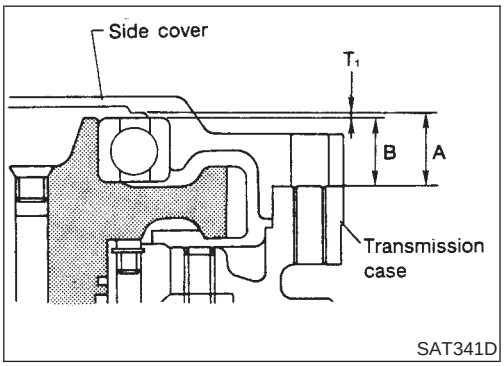

OUTPUT SHAFT END PLAY

NHAT0178S03

- Measure clearance between side cover and the end of the output shaft bearing.
- Select proper thickness of adjusting shim so that clearance is within specifications.

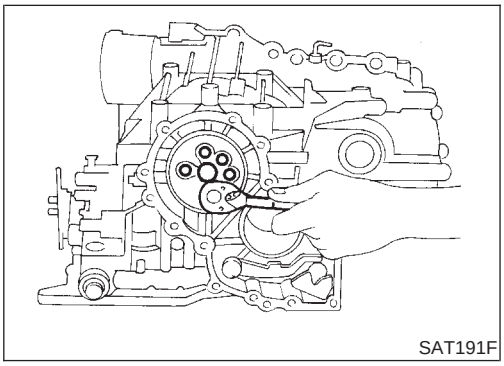

1. Install bearing retainer for output shaft.

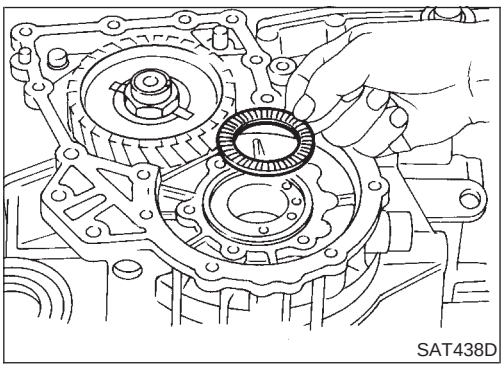

2. Install output shaft thrust needle bearing on bearing retainer.

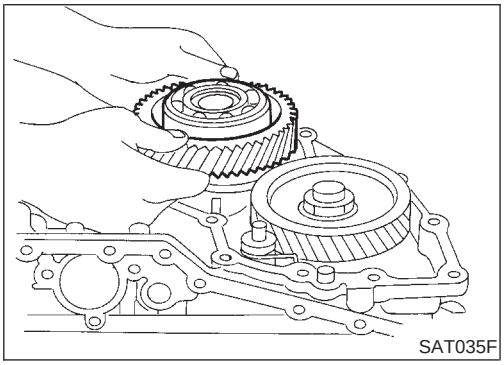

3. Install output shaft on transmission case.

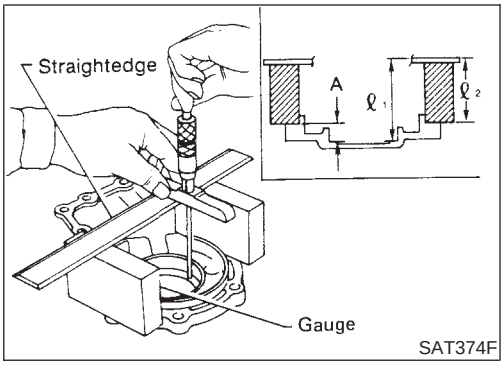

SAT374F

4. Measure dimensions "ℓ_1" and "ℓ_2" at side cover and then calculate dimension "A".

- **Measure dimension "ℓ_1" and "ℓ_2" in at least two places.**

"A": Distance between transmission case fitting surface and adjusting shim mating surface.

$A = \ell_1 - \ell_2$

ℓ_2: Height of gauge

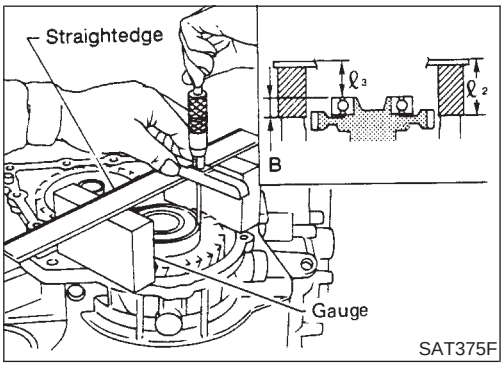

SAT375F

5. Measure dimensions "ℓ_2" and "ℓ_3" and then calculate dimension "B".

- **Measure "ℓ_2" and "ℓ_3" in at least two places.**

"B": Distance between the end of output shaft bearing outer race and the side cover fitting surface of transmission case.

$B = \ell_2 - \ell_3$

ℓ_2: Height of gauge

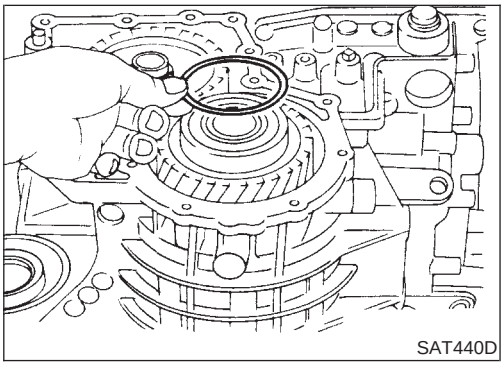
SAT440D

6. Select proper thickness of adjusting shim so that output shaft end play (clearance between side cover and output shaft bearing) is within specifications.

Output shaft end play (A − B):

0 - 0.15 mm (0 - 0.0059 in)

Output shaft end play adjusting shims:

Refer to SDS, AT-389.

7. Install adjusting shim on output shaft bearing.

Assembly (2)

NHAT0179

1. Apply Genuine Anaerobic Liquid Gasket or equivalent* to transmission case as shown in illustration.
*: Refer to GI section.

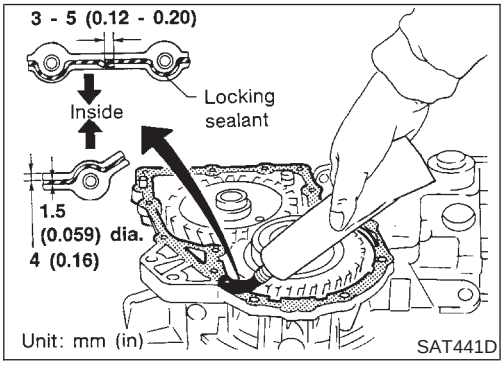

SAT441D

2. Set side cover on transmission case.

- **Apply locking sealant to the mating surface of transmission case.**

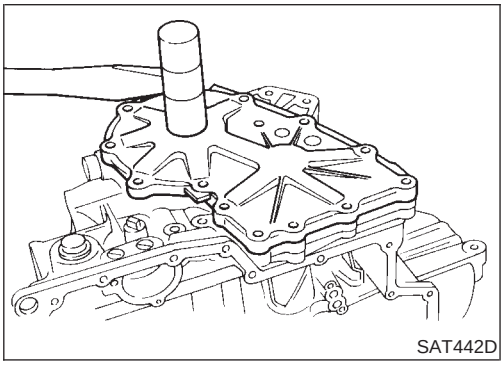
SAT442D

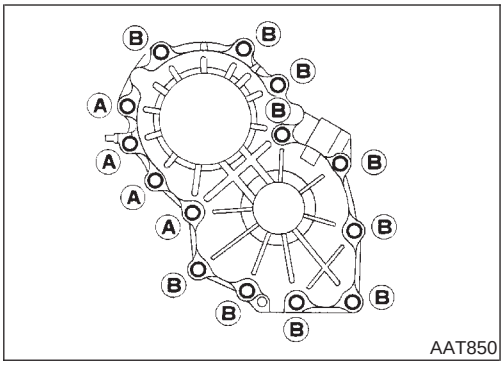

3. Tighten side cover fixing bolts to specified torque. Refer to AT-288.
- **Do not mix bolts A and B.**
- **Always replace bolts A as they are self-sealing bolts.**

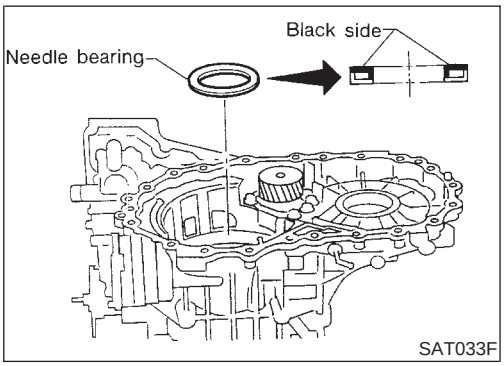

4. Remove paper rolled around bearing retainer.
5. Install thrust washer on bearing retainer.
- **Apply petroleum jelly to thrust washer.**

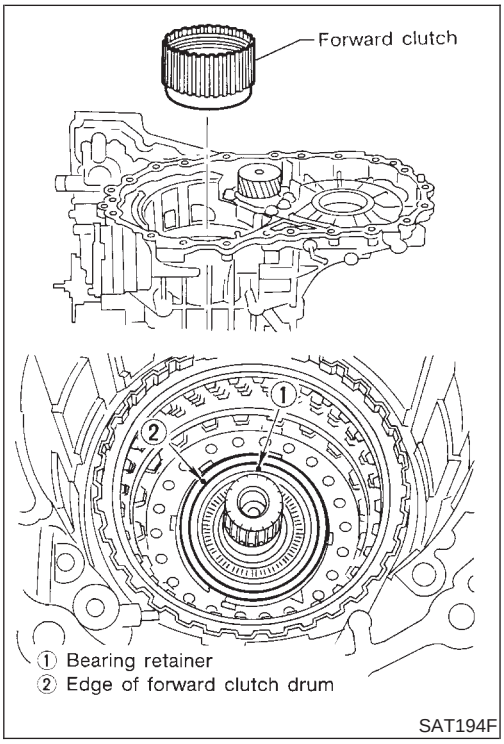

6. Install forward clutch assembly.
- **Align teeth of low & reverse brake drive plates before installing.**
- **Make sure that bearing retainer seal rings are not spread.**
- **If forward clutch assembly is correctly seated, points 1 and 2 are at almost same level.**

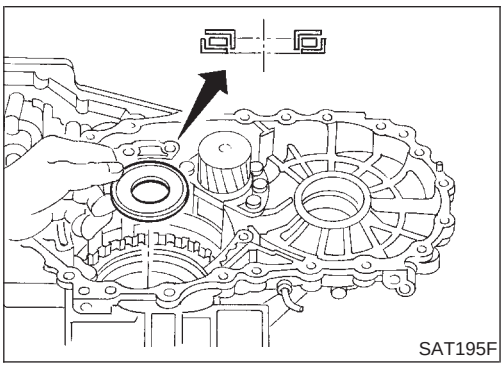

7. Install thrust needle bearing on bearing retainer.
- **Apply petroleum jelly to thrust needle bearing.**
- **Pay attention to direction of thrust needle bearing.**

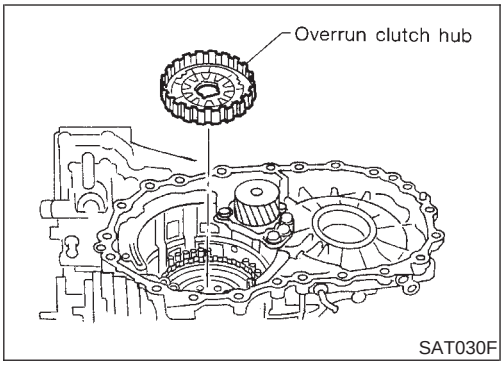

8. Install overrun clutch hub.
- **Apply petroleum jelly to thrust washers.**
- **Align teeth of overrun clutch drive plates before installing.**

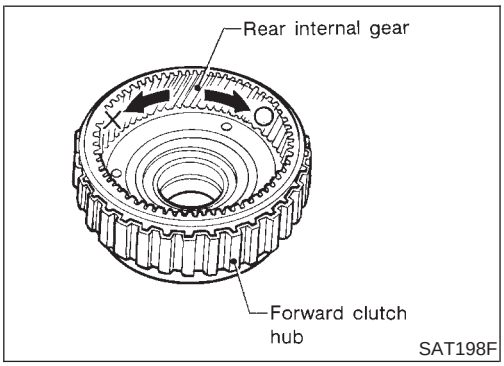

9. Hold forward clutch hub and turn rear internal gear.
   Check overrun clutch hub for correct directions of lock and unlock.
- **If not shown as illustrated, check installed direction of forward one-way clutch.**

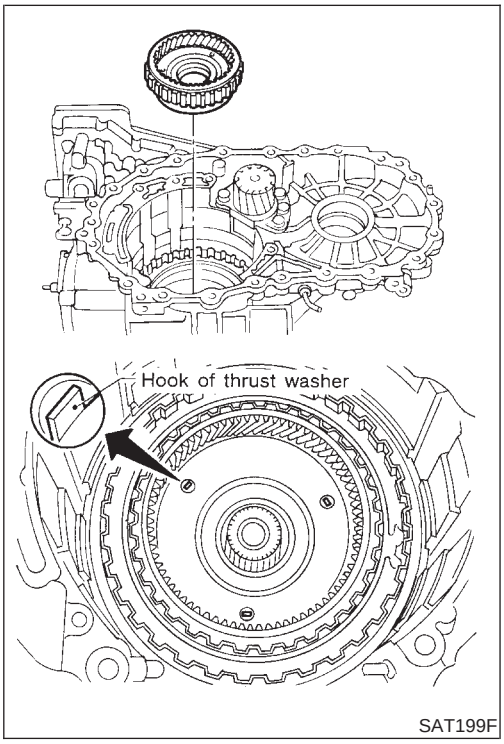

10. Install forward clutch hub and rear internal gear assembly.
- **Align teeth of forward clutch drive plates before installing.**
- **Check that three hooks of thrust washer are correctly aligned after installing.**

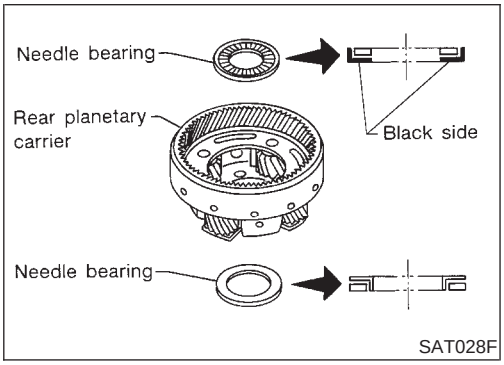

11. Install rear planetary carrier assembly and rear sun gear according to the following procedures.

a. Install needle bearings on rear planetary carrier.
- **Apply petroleum jelly to needle bearings.**
- **Pay attention to direction of needle bearings.**

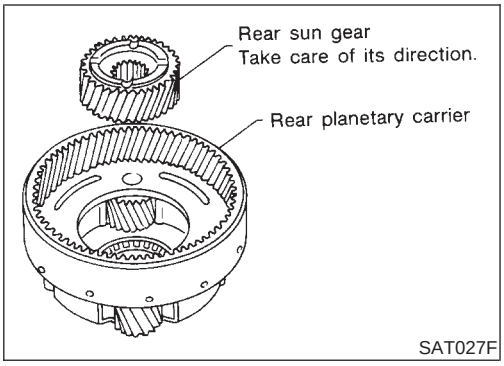

b. Install rear sun gear on rear planetary carrier.

- **Pay attention to direction of rear sun gear.**

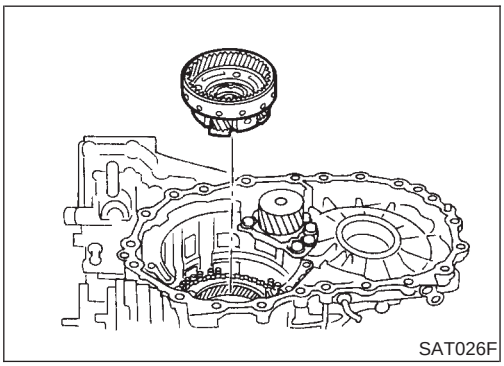

c. Install rear planetary carrier on transmission case.

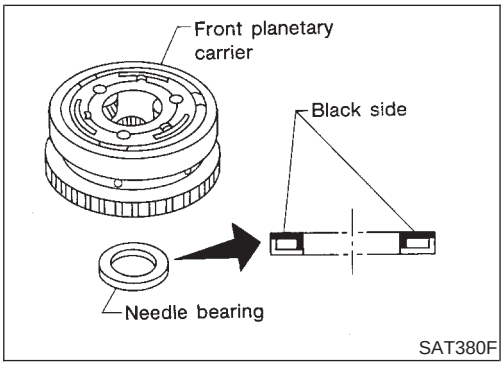

12. Install thrust needle bearing on front planetary carrier, then install them together on transmission case.

- **Apply petroleum jelly to thrust needle bearing.**
- **Pay attention to direction of thrust needle bearing.**

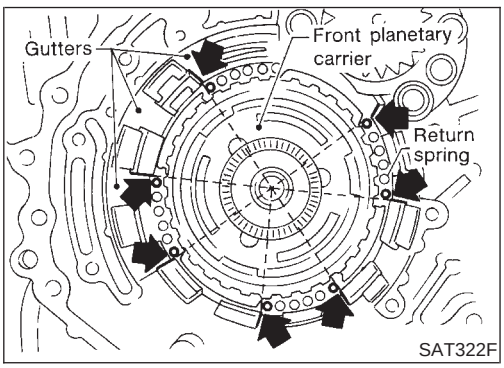

13. Install low and reverse brake piston according to the following procedures.

a. Set and align return springs to transmission case gutters as shown in illustration.

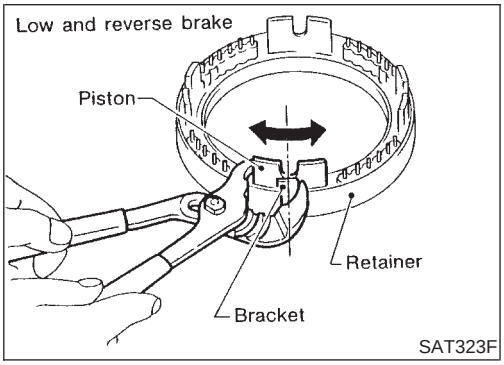

b. Set and align piston with retainer.

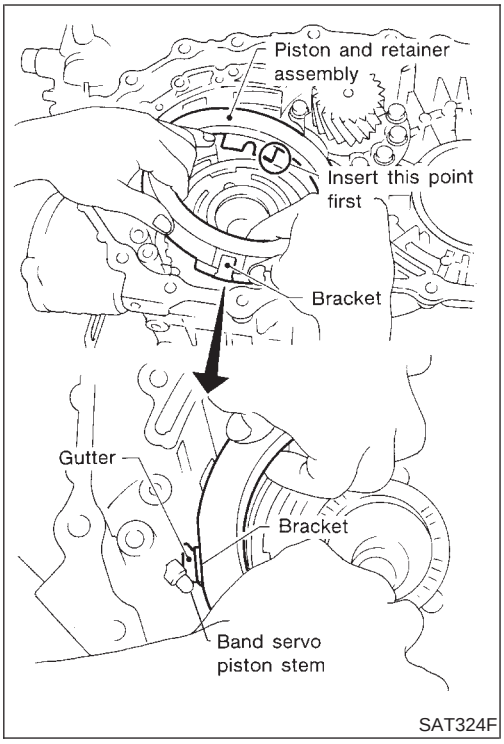

c. Install piston and retainer assembly on the transmission case.

- **Align bracket to specified gutter as indicated in illustration.**

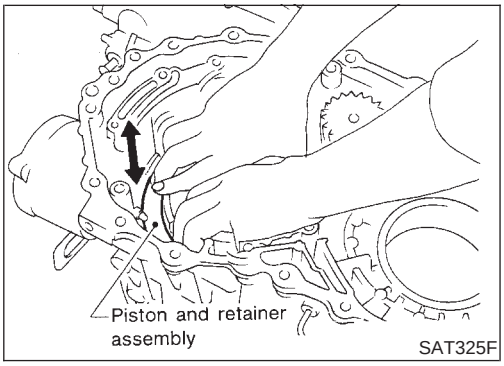

d. Check that each protrusion of piston is correctly set to corresponding return spring as follows.

- **Push piston and retainer assembly evenly and confirm they move smoothly.**
- **If they can not move smoothly, remove piston and retainer assembly and align return spring correctly as instructed in step "a".**

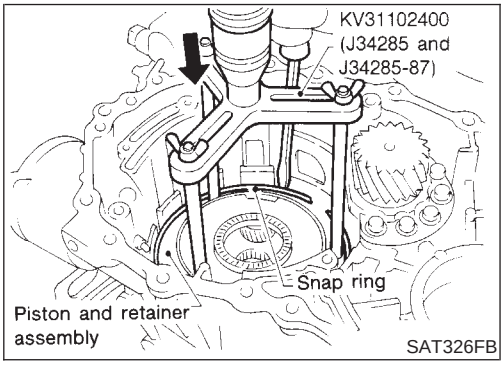

e. Push down piston and retainer assembly and install snap ring.

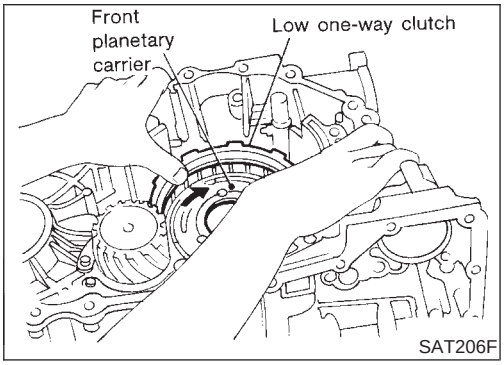

14. Install low one-way clutch to front planetary carrier by turning carrier in the direction of the arrow shown.

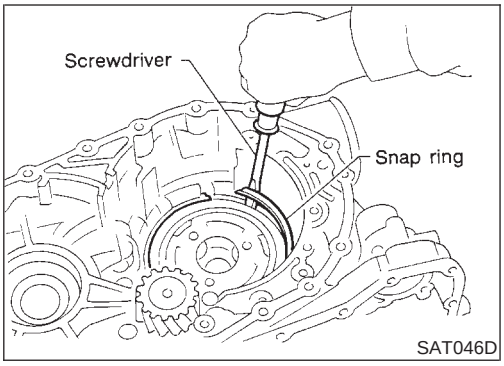

15. Install snap ring with screwdriver.
- **Forward clutch and bearing must be correctly installed for snap ring to fit into groove of transmission case.**

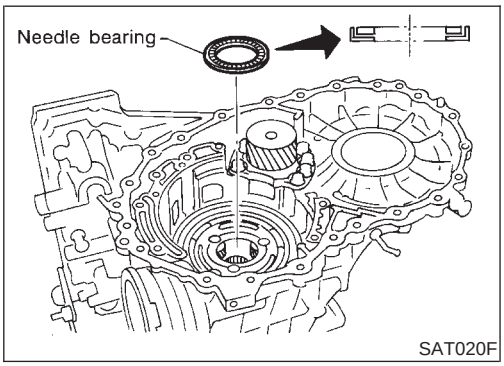

16. Install needle bearing on transmission case.
- **Apply petroleum jelly to needle bearing.**
- **Pay attention to direction of needle bearing.**

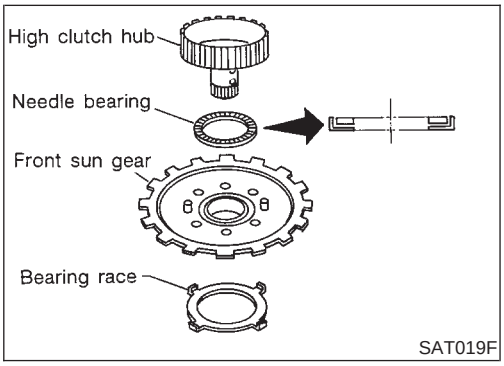

17. Install bearing race, needle bearing and high clutch hub on front sun gear.
- **Apply petroleum jelly to needle bearing.**
- **Pay attention to direction of needle bearing.**

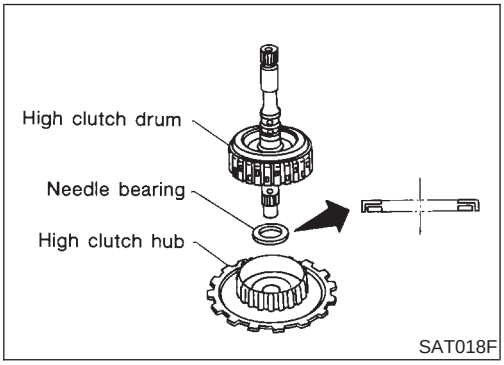

18. Install needle bearing and high clutch drum on high clutch hub.

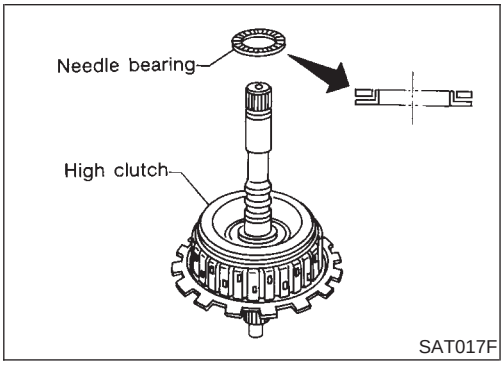

19. Install needle bearing on high clutch drum.
- **Apply petroleum jelly to needle bearing.**
- **Pay attention to direction of needle bearing.**

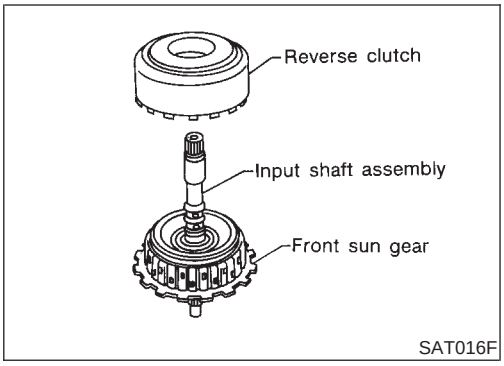

20. Remove paper rolled around input shaft.
21. Install input shaft assembly in reverse clutch.
- **Align teeth of reverse clutch drive plates before installing.**

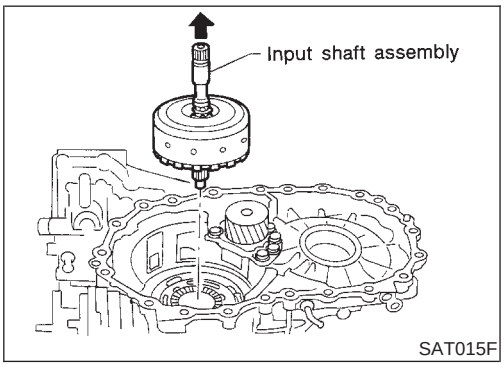

22. Install reverse clutch assembly on transmission case.
- **Align teeth of high clutch drive plates before installing.**

Adjustment (2)

NHAT0180

When any parts listed below are replaced, adjust total end play and reverse clutch end play.

Part name	Total end play	Reverse clutch end play
Transmission case	●	●
Overrun clutch hub	●	●
Rear internal gear	●	●
Rear planetary carrier	●	●
Rear sun gear	●	●
Front planetary carrier	●	●
Front sun gear	●	●
High clutch hub	●	●
High clutch drum	●	●
Oil pump cover	●	●
Reverse clutch drum	—	●

TOTAL END PLAY

NHAT0180S01

1. Adjust total end play "T_1".

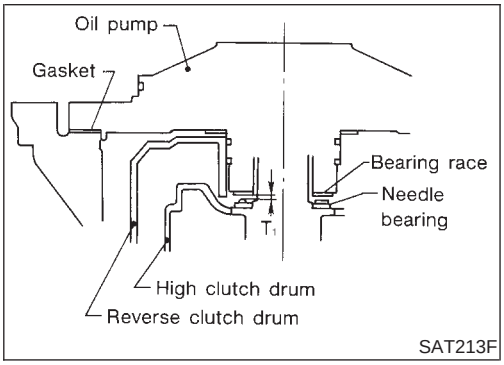

Adjustment (2) (Cont'd)

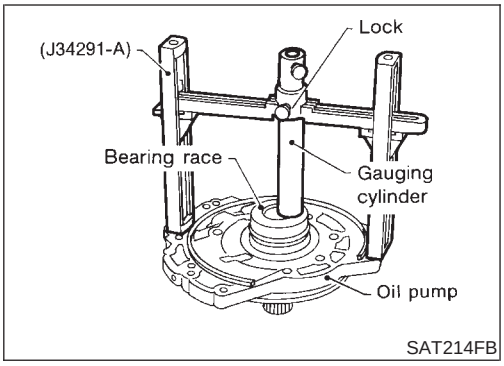

a. With original bearing race installed, place Tool onto oil pump. The long ends of legs should be placed firmly on machined surface of oil pump assembly. The gauging cylinder should rest on top of bearing race. Lock gauging cylinder in place with set screw.

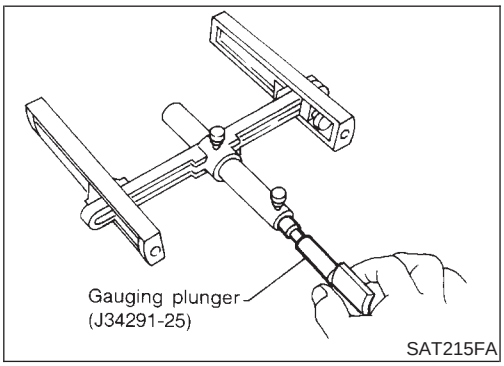

b. Install gauging plunger into cylinder.

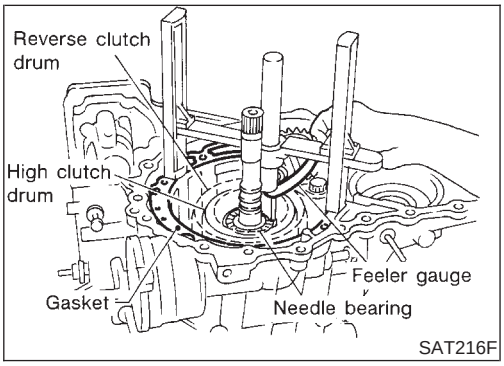

c. With needle bearing installed on high clutch drum, place Tool legs on machined surface of transmission case (with gasket). Then allow plunger to rest on needle bearing.

d. Measure gap between cylinder and plunger. This measurement should give exact total end play.

Total end play "T_1":

0.25 - 0.55 mm (0.0098 - 0.0217 in)

- If end play is out of specification, decrease or increase thickness of bearing race as necessary.

Available bearing race for adjusting total end play:

Refer to SDS, AT-389.

2. Adjust reverse clutch drum end play "T_2".

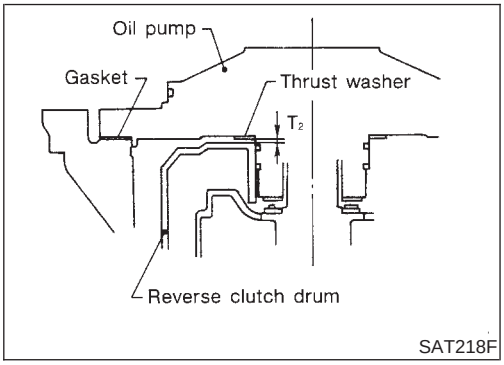

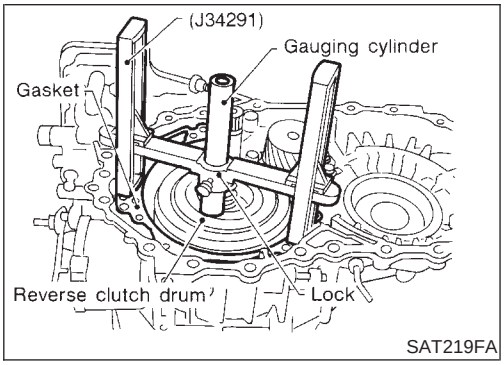

a. Place Tool on machined surface of transmission case (with gasket). Then allow gauging cylinder to rest on reverse clutch drum. Lock cylinder in place with set screw.

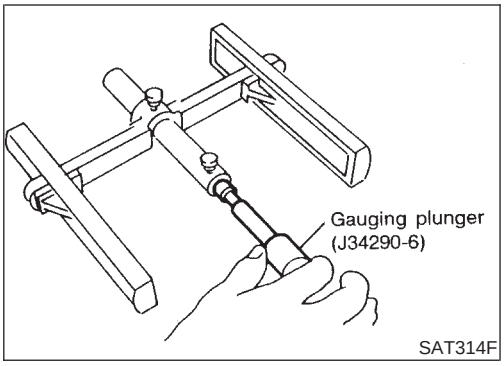

SAT314F

b. Install gauging plunger into cylinder.
c. With original thrust washer installed on oil pump, place Tool legs onto machined surface of oil pump assembly. Then allow plunger to rest on thrust washer.
d. Measure gap between cylinder and plunger with feeler gauge. This measurement should give exact reverse clutch drum end play.

Reverse clutch drum end play "T_2":
0.55 - 0.90 mm (0.0217 - 0.0354 in)

- If end play is out of specification, decrease or increase thickness of thrust washer as necessary.

Available thrust washer for adjusting reverse clutch drum end play:
Refer to SDS, AT-389.

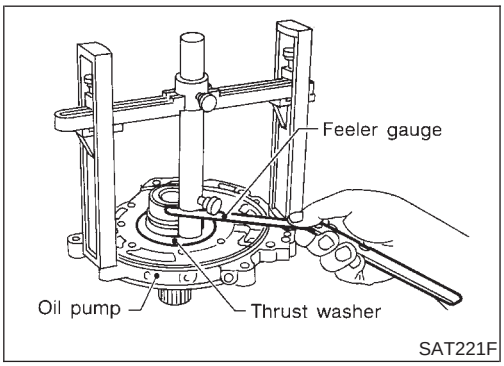

SAT221F

Assembly (3)

NHAT0181

1. Install anchor end pin and lock nut on transmission case.
2. Place brake band on outside of reverse clutch drum. Tighten anchor end pin just enough so that brake band is evenly fitted on reverse clutch drum.

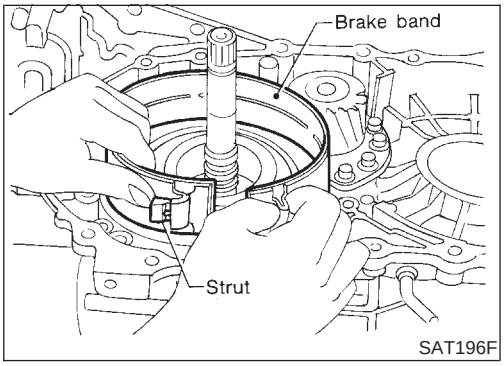

SAT196F

3. Place bearing race selected in total end play adjustment step on oil pump cover.
- **Apply petroleum jelly to bearing race.**
4. Place thrust washer selected in reverse clutch end play step on reverse clutch drum.
- **Apply petroleum jelly to thrust washer.**

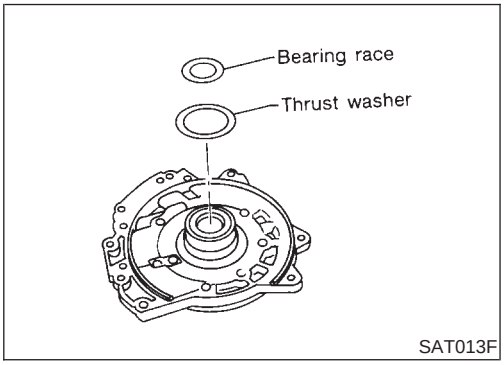

SAT013F

5. Install oil pump assembly, baffle plate and gasket on transmission case.
6. Tighten oil pump fixing bolts to the specified torque.

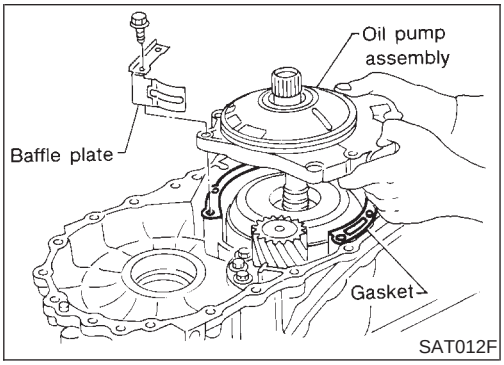

SAT012F

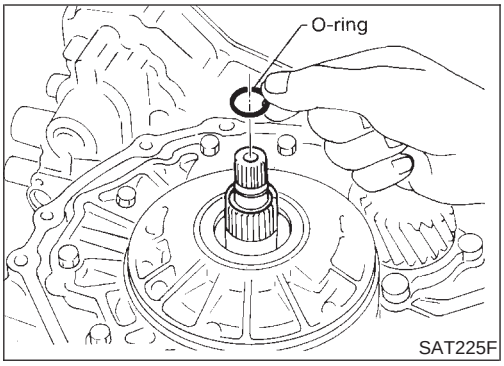

7. Install O-ring to input shaft.
- **Apply ATF to O-ring.**

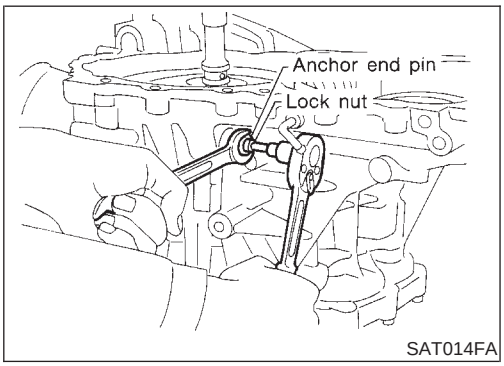

8. Adjust brake band.
a. Tighten anchor end pin to the specified torque.
   Anchor end pin:
   Refer to SDS, AT-385.
b. Back off anchor end pin two and a half turns.
c. While holding anchor end pin, tighten lock nut.
   Lock nut:
   Refer to SDS, AT-385.

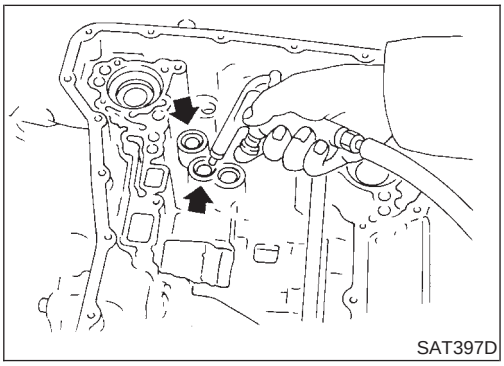

9. Apply compressed air to oil holes of transmission case and check operation of brake band.

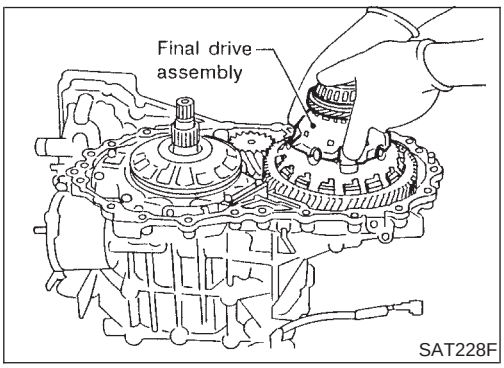

10. Install final drive assembly on transmission case.

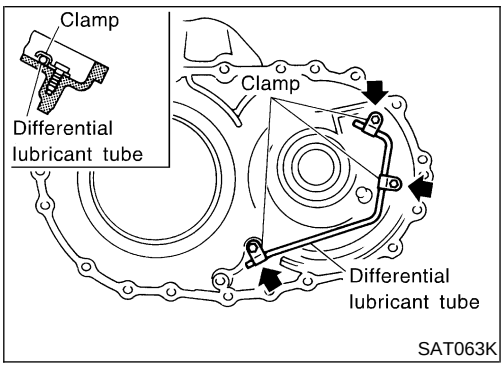

11. Install differential lubricant tube on converter housing. Tighten differential lubricant tube bolts to the specified torque. Refer to AT-288.

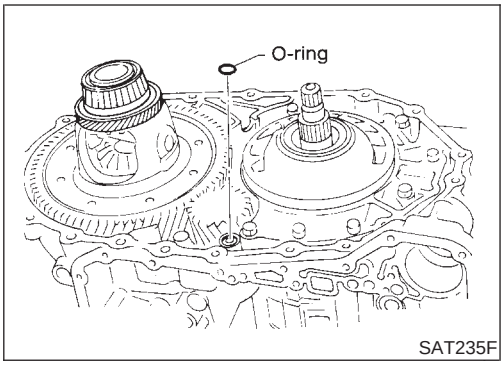

SAT235F

12. Install O-ring on differential oil port of transmission case.

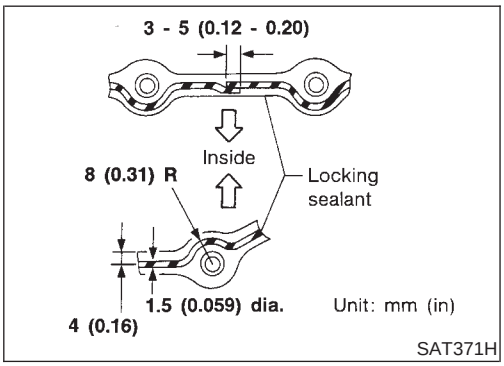

SAT371H

13. Install converter housing on transmission case.
- **Apply Anaerobic Liquid Gasket or equivalent* to mating surface of converter housing.**
  ***: Refer to GI section.**

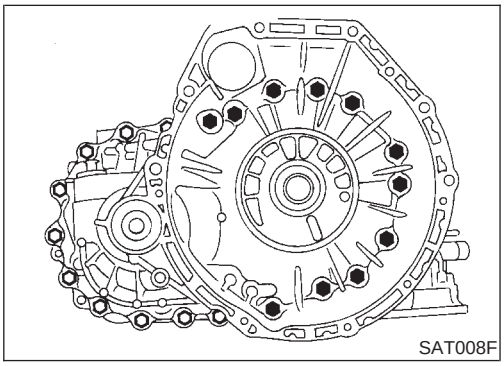

SAT008F

- **Tighten converter housing bolts to the specified torque. Refer to AT-288.**

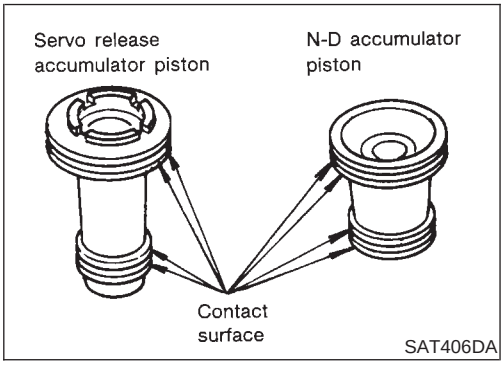

SAT406DA

14. Install accumulator piston.

a. Check contact surface of accumulator piston for damage.

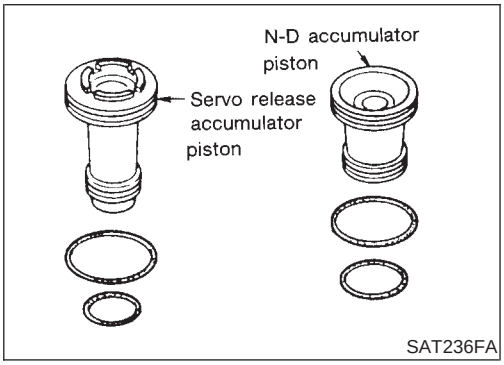

SAT236FA

b. Install O-rings on accumulator piston.
- **Apply ATF to O-rings.**

Accumulator piston O-rings:
Refer to SDS, AT-382.

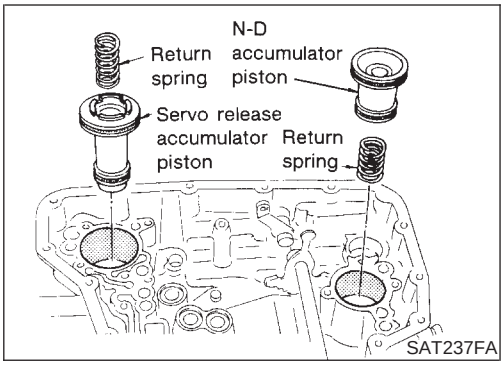

c. Install accumulator pistons and return springs on transmission case.

- **Apply ATF to inner surface of transmission case.**

Return springs:

Refer to SDS, AT-383.

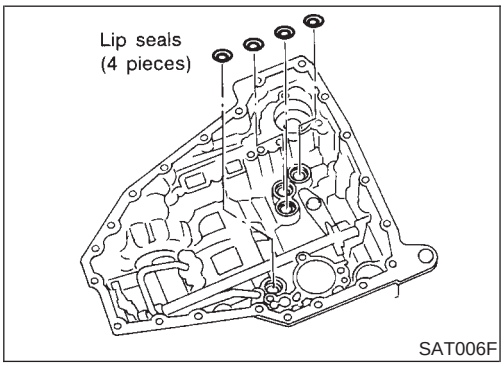

15. Install lip seals for band servo oil holes on transmission case.

- **Apply petroleum jelly to lip seals.**

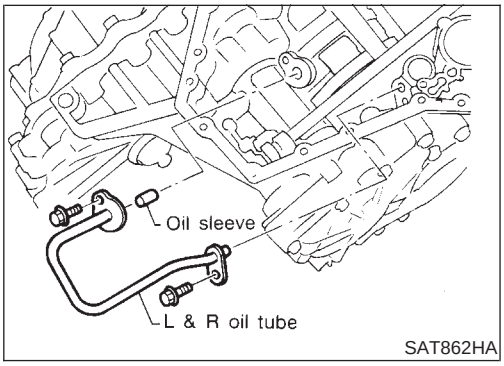

16. Install L & R oil tube and oil sleeve. Tighten L & R oil tube bolts to the specified torque. Refer to AT-288.

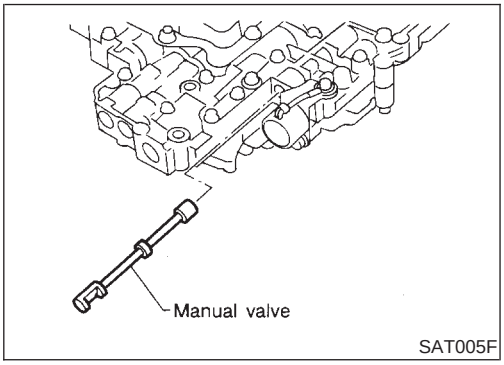

17. Install control valve assembly.

a. Insert manual valve into control valve assembly.

- **Apply ATF to manual valve.**

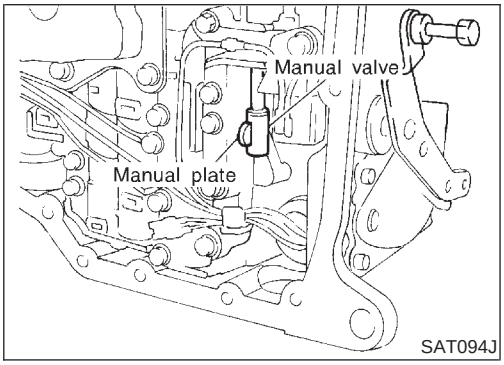

b. Set manual shaft in Neutral position.

c. Install control valve assembly on transmission case while aligning manual valve with manual plate.

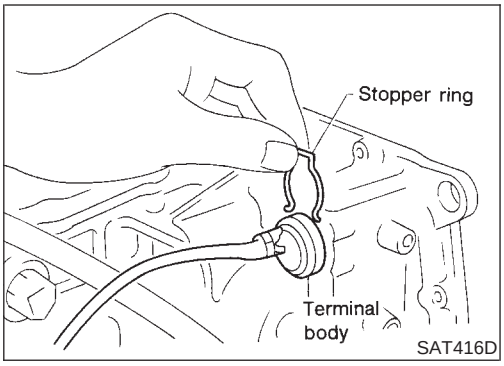

d. Pass solenoid harness through transmission case and install terminal body on transmission case by pushing it.

e. Install stopper ring to terminal body.

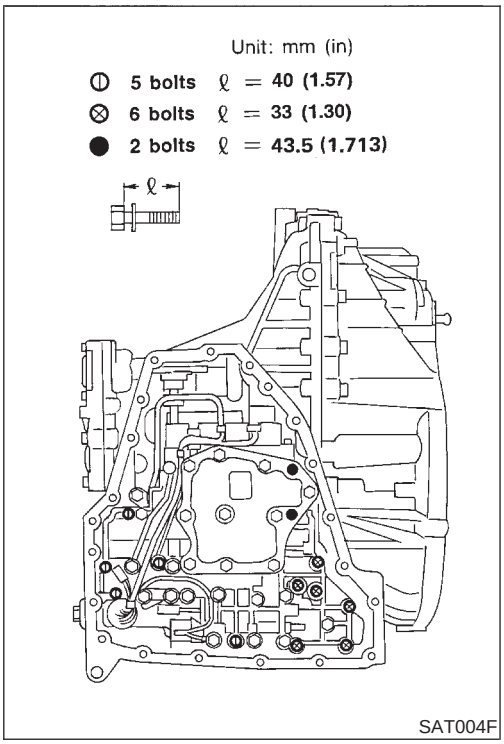

f. Tighten bolts **I**, **X** and ●.

Bolt length, number and location:

Bolt	I	X	●
Bolt length "ℓ" ℓ mm (in)	40 (1.57)	33 (1.30)	43.5 (1.713)
Number of bolts	5	6	2

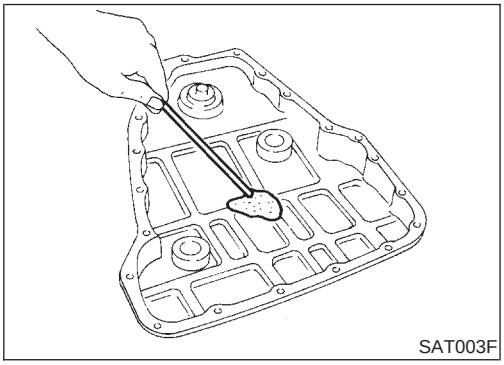

18. Install oil pan.

a. Attach a magnet to oil pan.

b. Install new oil pan gasket on transmission case.

c. Install oil pan on transmission case.

- **Always replace oil pan bolts as they are self-sealing bolts.**
- **Tighten four bolts in a criss-cross pattern to prevent dislocation of gasket.**

d. Tighten oil pan bolts and drain plug to the specified torque. Refer to AT-288.

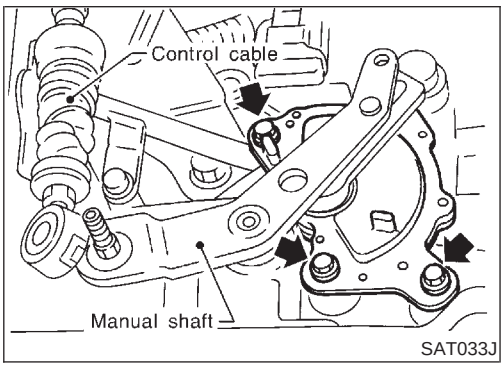

19. Install park/neutral position (PNP) switch.

a. Set manual shaft in P position.

b. Temporarily install park/neutral position (PNP) switch on manual shaft.

c. Move selector lever to N position.

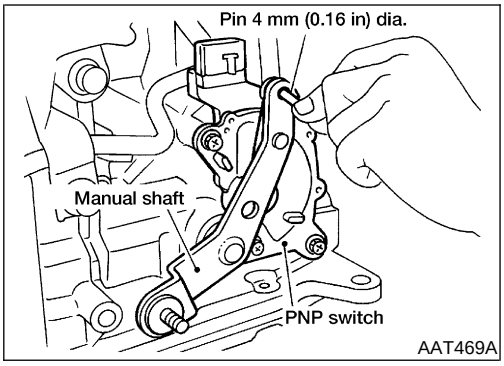

d. Use a 4 mm (0.16 in) pin for this adjustment.

i. Insert the pin straight into the manual shaft adjustment hole.

ii. Rotate park/neutral position (PNP) switch until the pin can also be inserted straight into hole in park/neutral position (PNP) switch.

e. Tighten park/neutral position (PNP) switch fixing bolts. Refer to AT-288.

f. Remove pin from adjustment hole after adjusting park/neutral position (PNP) switch.

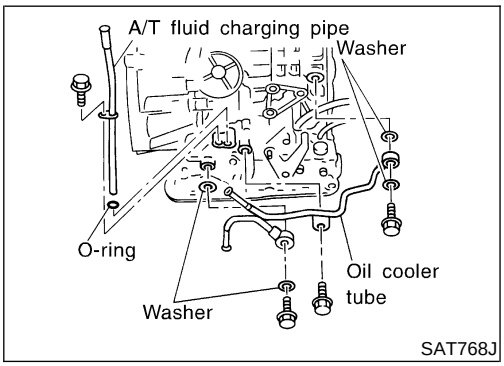

20. Install A/T fluid charging pipe and fluid cooler tube to transmission case. Tighten A/T fluid charging pipe and fluid cooler tube bolts to the specified torque. Refer to AT-288.

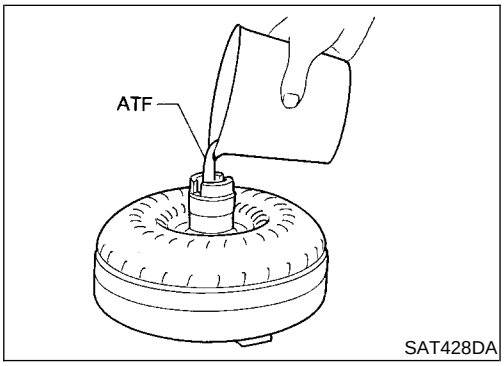

21. Install torque converter.

a. Pour ATF into torque converter.

- **Approximately 1 liter (1-1/8 US qt, 7/8 Imp qt) of fluid is required for a new torque converter.**
- **When reusing old torque converter, add the same amount of fluid as was drained.**

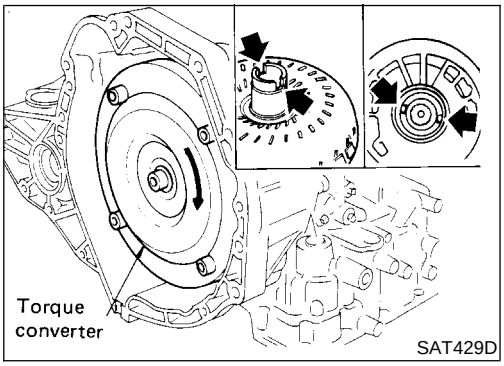

b. Install torque converter while aligning notches of torque converter with notches of oil pump.

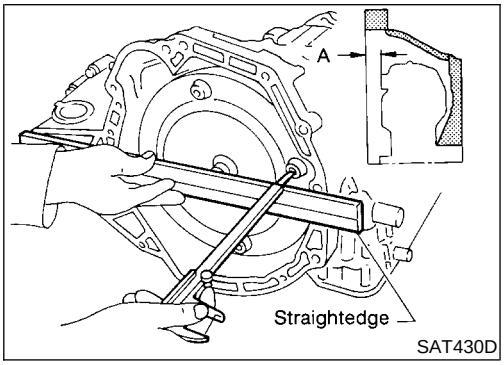

c. Measure distance "A" to check that torque converter is in proper position.

Distance A:

Refer to SDS, AT-390.

General Specifications

NHAT0182

Engine		VQ35DE
Automatic transaxle model		RE4F04B
Automatic transaxle assembly	Model code number	88X04
Transaxle gear ratio	1st	2.785
	2nd	1.545
	3rd	1.000
	4th	0.694
	Reverse	2.272
	Final drive	3.789
Recommended fluid		Nissan Matic “D” (Continental U.S. and Alaska) or Canada Nissan Automatic Transmission Fluid (Canada)*1
Fluid capacity ℓ (US qt, Imp qt)		8.5 (9, 7-1/2)

*1: Refer to MA-11, “Fluids and Lubricants”.

Shift Schedule

NHAT0183

VEHICLE SPEED WHEN SHIFTING GEARS THROTTLE POSITION

NHAT0183S01

Throttle position	Shift pattern	Vehicle speed km/h (MPH)					
		$D_1 \rightarrow D_2$	$D_2 \rightarrow D_3$	$D_3 \rightarrow D_4$	$D_4 \rightarrow D_3$	$D_3 \rightarrow D_2$	$D_2 \rightarrow D_1$
Full throttle	Comfort	59 - 67 (37 - 42)	110 - 118 (68 - 73)	173 - 181 (108 - 112)	169 - 177 (105 - 110)	100 - 108 (62 - 67)	41 - 49 (25 - 30)
	Auto power	59 - 67 (37 - 42)	110 - 118 (68 - 73)	173 - 181 (108 - 112)	169 - 177 (105 - 110)	100 - 108 (62 - 67)	41 - 49 (25 - 30)
Half throttle	Comfort	45 - 53 (28 - 33)	77 - 85 (48 - 53)	133 - 141 (83 - 88)	84 - 92 (52 - 57)	46 - 54 (29 - 34)	15 - 23 (9 - 14)
	Auto power	45 - 53 (28 - 33)	77 - 85 (48 - 53)	134 - 142 (83 - 88)	121 - 129 (75 - 80)	54 - 62 (34 - 39)	16 - 24 (10 - 15)

VEHICLE SPEED WHEN PERFORMING AND RELEASING LOCK-UP

NHAT0183S02

Unit: km/h (MPH)

Throttle position	Selector lever position	Shift patern	Vehicle speed Km/h (MPH)	
			Lock-up ″ON″	Lock-up ″OFF″
2.0/8	D position	Comfort	99 - 107 (62 - 66)	62 - 70 (39 - 43)
		Auto Power	99 - 107 (62 - 66)	62 - 70 (39 - 43)
	3rd position	Comfort	86 - 94 (53 - 58)	83 - 91 (52 - 57)
		Auto Power	86 - 94 (53 - 58)	83 - 91 (52 - 57)

NOTE:

- Lock-up vehicle speed indicates the speed in D_4 position.
- Perform lock-up inspection after warming up engine.
- Lock-up vehicle speed may vary depending on the driving conditions and circumstances.

Stall Revolution

NHAT0184

Engine	Stall revolution rpm
VQ35DE	2,550 - 3,050

Line Pressure

NHAT0185

Engine speed rpm	Line pressure kPa (kg/cm^2, psi)	
	D, 2nd and 1st positions	R position
Idle	500 (5.1, 73)	778 (7.9, 113)
Stall	1,233 (12.6, 179)	1,918 (19.6, 278)

Control Valves

NHAT0186

CONTROL VALVE AND PLUG RETURN SPRINGS

NHAT0186S01

Unit: mm (in)

Parts			Item		
			Part No.*	Free length	Outer diameter
Upper body	23	Pilot valve spring	31742-3AX03	38.98 (1.535)	8.9 (0.350)
	7	1-2 accumulator valve spring	31742-3AX00	20.5 (0.807)	6.95 (0.274)
	28	1-2 accumulator piston spring	31742-3AX09	55.66 (2.191)	19.6 (0.772)
	33	1st reducing valve spring	31742-85X05	26.0 (1.024)	7.0 (0.276)
	35	3-2 timing valve spring	31736-01X00	23.0 (0.906)	6.65 (0.262)
	18	Overrun clutch reducing valve spring	31742-80X15	37.5 (1.476)	6.9 (0.272)
	16	Torque converter relief valve spring	31742-80X07	31.0 (1.220)	9.0 (0.354)
	11	Torque converter clutch control valve	31742-85X00	56.98 (2.243)	6.5 (0.256)
	3	Cooler check valve spring	31742-85X01	29.4 (1.157)	6.0 (0.236)
Lower body	15	Pressure regulator valve spring	31742-80X13	45.0 (1.772)	15.0 (0.591)
	20	Overrun clutch control valve spring	31762-80X00	21.7 (0.854)	7.0 (0.276)
	24	Accumulator control valve spring	31742-80X02	22.0 (0.866)	6.5 (0.256)
	29	Shift valve A spring	31762-80X00	21.7 (0.854)	7.0 (0.276)
	32	Shuttle valve spring	31762-41X04	51.0 (2.008)	5.65 (0.222)
	12	Shift valve B spring	31762-80X00	21.7 (0.854)	7.0 (0.276)
	7	Pressure modifier valve spring	31742-41X15	30.5 (1.201)	9.8 (0.386)
	3		31742-80X16	32.0 (1.260)	6.9 (0.272)
	—	Oil cooler relief valve spring	31872-31X00	17.02 (0.670)	8.0 (0.315)

*: Always check with the Parts Department for the latest parts information.

Accumulator

NHAT0187

O-RING

NHAT0187S01

Unit: mm (in)

Accumulator	Part No.*	Inner diameter (Small)	Part No.*	Inner diameter (Large)
Servo release accumulator	31526-41X03	26.9 (1.059)	31526-41X02	44.2 (1.740)
N-D accumulator	31526-31X08	34.6 (1.362)	31672-21X00	39.4 (1.551)

*: Always check with the Parts Department for the latest parts information.

RETURN SPRING

=NHAT0187S02

Unit: mm (in)

Accumulator	Part number*	Free length	Outer diameter
Servo release accumulator	31605-80X00	52.5 (2.067)	20.1 (0.791)
N-D accumulator	31605-85X01	45.01 (1.772)	28.0 (1.102)

*: Always check with the Parts Department for the latest parts information.

Clutch and Brakes

NHAT0188

REVERSE CLUTCH

NHAT0188S01

Model code number		88X04	
Number of drive plates		2	
Number of driven plates		2	
Drive plate thickness mm (in)	Standard	1.6 (0.063)	
	Allowable limit	1.4 (0.055)	
Clearance mm (in)	Standard	0.5 - 0.8 (0.020 - 0.031)	
	Allowable limit	1.2 (0.047)	
Thickness of retaining plates		Thickness mm (in)	Part number*
		6.6 (0.260)	31537-80X05
		6.8 (0.268)	31537-80X06
		7.0 (0.276)	31537-80X07
		7.2 (0.283)	31537-80X08
		7.4 (0.291)	31537-80X09
		7.6 (0.299)	31537-80X20
		7.8 (0.307)	31537-80X21

*: Always check with the Parts Department for the latest parts information.

HIGH CLUTCH

NHAT0188S02

Model code number		88X04	
Number of drive plates		4	
Number of driven plates		6 + 1	
Drive plate thickness mm (in)	Standard	1.6 (0.063)	
	Allowable limit	1.4 (0.055)	
Clearance mm (in)	Standard	1.8 - 2.2 (0.071 - 0.087)	
	Allowable limit	2.8 (0.110)	
Thickness of retaining plates		Thickness mm (in)	Part number*
		3.0 (0.118)	31537-81X10
		3.2 (0.126)	31537-81X11
		3.4 (0.134)	31537-81X12
		3.6 (0.142)	31537-81X13
		3.8 (0.150)	31537-81X14
		4.0 (0.157)	31537-81X15

*: Always check with the Parts Department for the latest parts information.

FORWARD CLUTCH

NHAT0188S03

Model code number		88X04	
Number of drive plates		6	
Number of driven plates		6	
Drive plate thickness mm (in)	Standard	1.6 (0.063)	
	Allowable limit	1.4 (0.055)	
Clearance mm (in)	Standard	0.45 - 0.85 (0.0177 - 0.0335)	
	Allowable limit	1.85 (0.0728)	
Thickness of retaining plates		Thickness mm (in)	Part number*
		3.2 (0.126)	31537-80X76
		3.4 (0.134)	31537-80X75
		3.6 (0.142)	31537-80X70
		3.8 (0.150)	31537-80X71
		4.0 (0.157)	31537-80X72
		4.2 (0.165)	31537-80X73
		4.4 (0.173)	31537-80X74

*: Always check with the Parts Department for the latest parts information.

OVERRUN CLUTCH

NHAT0188S04

Model code number		88X04	
Number of drive plates		4	
Number of driven plates		4	
Drive plate thickness mm (in)	Standard	1.6 (0.063)	
	Allowable limit	1.4 (0.055)	
Clearance mm (in)	Standard	0.7 - 1.1 (0.028 - 0.043)	
	Allowable limit	1.7 (0.067)	
Thickness of retaining plates		Thickness mm (in)	Part number*
		3.0 (0.118)	31537-80X65
		3.2 (0.126)	31537-80X66
		3.4 (0.134)	31537-80X67
		3.6 (0.142)	31537-80X68
		3.8 (0.150)	31537-80X69

*: Always check with the Parts Department for the latest parts information.

LOW & REVERSE BRAKE

NHAT0188S05

Model code number		88X04	
Number of drive plates		7	
Number of driven plates		7	
Drive plate thickness mm (in)	Standard	1.8 (0.071)	
	Allowable limit	1.6 (0.063)	
Clearance mm (in)	Standard	1.7 - 2.1 (0.067 - 0.083)	
	Allowable limit	3.3 (0.130)	
Thickness of retaining plates		Thickness mm (in)	Part number*
		2.0 (0.079)	31667-80X00
		2.2 (0.087)	31667-80X01
		2.4 (0.094)	31667-80X02
		2.6 (0.102)	31667-80X03
		2.8 (0.110)	31667-80X04
		3.0 (0.118)	31667-80X05
		3.2 (0.126)	31667-80X06
		3.4 (0.134)	31667-80X07

*: Always check with the Parts Department for the latest parts information.

BRAKE BAND

NHAT0188S06

Anchor end pin tightening torque N·m (kg-m, in-lb)	4.0 - 5.8 (0.41 - 0.59, 36 - 51)
Number of returning revolutions for anchor end pin	2.5
Lock nut tightening torque N·m (kg-m, ft-lb)	32 - 36 (3.2 - 3.7, 23 - 27)

CLUTCH AND BRAKE RETURN SPRINGS

NHAT0188S07

Unit: mm (in)

Parts	Part number*	Free length	Outer diameter
Forward clutch (Overrun clutch) (22 pcs)	31505-80X02	21.4 (0.843)	10.3 (0.406)
High clutch (10 pcs)	31505-80X05	22.5 (0.886)	10.8 (0.425)
Low & reverse brake (24 pcs)	31505-80X07	24.1 (0.949)	6.6 (0.260)

*: Always check with the Parts Department for the latest parts information.

Final Drive

NHAT0189

DIFFERENTIAL SIDE GEAR CLEARANCE

NHAT0189S01

Clearance between side gear and differential case with washer mm (in)	0.1 - 0.2 (0.004 - 0.008)

DIFFERENTIAL SIDE GEAR THRUST WASHERS

NHAT0189S02

Thickness mm (in)	Part number*
0.75 (0.0295)	38424-81X00
0.80 (0.0315)	38424-81X01
0.85 (0.0335)	38424-81X02
0.90 (0.0354)	38424-81X03
0.95 (0.0374)	38424-81X04

*: Always check with the Parts Department for the latest parts information.

DIFFERENTIAL SIDE BEARING PRELOAD ADJUSTING SHIMS

NHAT0189S03

Thickness mm (in)	Part number*
0.48 (0.0189)	31438-80X00
0.52 (0.0205)	31438-80X01
0.56 (0.0220)	31438-80X02
0.60 (0.0236)	31438-80X03
0.64 (0.0252)	31438-80X04
0.68 (0.0268)	31438-80X05
0.72 (0.0283)	31438-80X06
0.76 (0.0299)	31438-80X07
0.80 (0.0315)	31438-80X08
0.84 (0.0331)	31438-80X09
0.88 (0.0346)	31438-80X10
0.92 (0.0362)	31438-80X11

*: Always check with the Parts Department for the latest parts information.

BEARING PRELOAD

NHAT0189S04

Differential side bearing preload mm (in)	0.05 - 0.09 (0.0020 - 0.0035)

TURNING TORQUE

NHAT0189S05

Turning torque of final drive assembly N·m (kg-cm, in-lb)	0.78 - 1.37 (8.0 - 14.0, 6.9 - 12.2)

CLUTCH AND BRAKE RETURN SPRINGS

NHAT0189S06

Unit: mm (in)

Parts	Part number*	Free length	Outer diameter
Forward clutch (Overrun clutch) (22 pcs)	31505-80X02	21.4 (0.843)	10.3 (0.406)
High clutch (10 pcs)	31505-80X05	22.5 (0.886)	10.8 (0.425)
Low & reverse brake (24 pcs)	31505-80X07	24.1 (0.949)	6.6 (0.260)

*: Always check with the Parts Department for the latest parts information.

Planetary Carrier and Oil Pump

NHAT0190

PLANETARY CARRIER

NHAT0190S01

Clearance between planetary carrier and pinion washer mm (in)	Standard	0.20 - 0.70 (0.0079 - 0.0276)
	Allowable limit	0.80 (0.0315)

OIL PUMP

NHAT0190S02

Oil pump side clearance mm (in)		0.030 - 0.050 (0.0012 - 0.0020)	
Thickness of inner gears and outer gears		Inner gear	
		Thickness mm (in)	Part number*
		11.99 - 12.0 (0.4720 - 0.4724) 11.98 - 11.99 (0.4717 - 0.4720) 11.97 - 11.98 (0.4713 - 0.4717)	31346-80X00 31346-80X01 31346-80X02
		Outer gear	
		Thickness mm (in)	Part number*
		11.99 - 12.0 (0.4720 - 0.4724) 11.98 - 11.99 (0.4717 - 0.4720) 11.97 - 11.98 (0.4713 - 0.4717)	31347-80X00 31347-80X01 31347-80X02
Clearance between oil pump housing and outer gear mm (in)	Standard	0.111 - 0.181 (0.0044 - 0.0071)	
	Allowable limit	0.181 (0.0071)	
Oil pump cover seal ring clearance mm (in)	Standard	0.1 - 0.25 (0.0039 - 0.0098)	
	Allowable limit	0.25 (0.0098)	

*: Always check with the Parts Department for the latest parts information.

Input Shaft

NHAT0191

SEAL RING CLEARANCE

NHAT0191S01

Input shaft seal ring clearance mm (in)	Standard	0.08 - 0.23 (0.0031 - 0.0091)
	Allowable limit	0.23 (0.0091)

SEAL RING

NHAT0191S02

Outer diameter mm (in)	Inner diameter mm (in)	Width mm (in)	Part number*
26.01 (1.024)	22.4 (0.882)	1.971 (0.078)	31525-80X02

*: Always check with the Parts Department for the latest Parts information.

Reduction Pinion Gear

NHAT0192

TURNING TORQUE

NHAT0192S01

Turning torque of reduction pinion gear N·m (kg-cm, in-lb)	0.05 - 0.39 (0.5 - 4.0, 0.43 - 3.47)

REDUCTION PINION GEAR BEARING ADJUSTING SHIMS

NHAT0192S02

NO.	Thickness mm (in)	Part number	NO.	Thickness mm (in)	Part number*
1	5.00 (0.1969)	31439-81X00	30	5.58 (0.2197)	31439-81X60
2	5.02 (0.1976)	31439-81X01	31	5.60 (0.2205)	31439-81X61
3	5.04 (0.1984)	31439-81X02	32	5.62 (0.2213)	31439-81X62
4	5.06 (0.1992)	31439-81X03	33	5.64 (0.2220)	31439-81X63
5	5.08 (0.2000)	31439-81X04	34	5.66 (0.2228)	31439-81X64
6	5.10 (0.2008)	31439-81X05	35	5.68 (0.2236)	31439-81X65
7	5.12 (0.2016)	31439-81X06	36	5.70 (0.2244)	31439-81X66
8	5.14 (0.2024)	31439-81X07	37	5.72 (0.2252)	31439-81X67
9	5.16 (0.2031)	31439-81X08	38	5.74 (0.2260)	31439-81X68
10	5.18 (0.2039)	31439-81X09	39	5.76 (0.2268)	31439-81X69
11	5.20 (0.2047)	31439-81X10	40	5.78 (0.2276)	31439-81X70

Reduction Pinion Gear (Cont'd)

NO.	Thickness mm (in)	Part number	NO.	Thickness mm (in)	Part number*
12	5.22 (0.2055)	31439-81X11	41	5.80 (0.2283)	31439-81X71
13	5.24 (0.2063)	31439-81X12	42	5.82 (0.2291)	31439-81X72
14	5.26 (0.2071)	31439-81X13	43	5.84 (0.2299)	31439-81X73
15	5.28 (0.2079)	31439-81X14	44	5.86 (0.2307)	31439-81X74
16	5.30 (0.2087)	31439-81X15	45	4.72 (0.1858)	31439-83X11
17	5.32 (0.2094)	31439-81X16	46	4.74 (0.1866)	31439-83X12
18	5.34 (0.2102)	31439-81X17	47	4.76 (0.1874)	31439-83X13
19	5.36 (0.2110)	31439-81X18	48	4.78 (0.1882)	31439-83X14
20	5.38 (0.2118)	31439-81X19	49	4.80 (0.1890)	31439-83X15
21	5.40 (0.2126)	31439-81X20	50	4.82 (0.1898)	31439-83X16
22	5.42 (0.2134)	31439-81X21	51	4.84 (0.1906)	31439-83X17
23	5.44 (0.2142)	31439-81X22	52	4.86 (0.1913)	31439-83X18
24	5.46 (0.2150)	31439-81X23	53	4.88 (0.1921)	31439-83X19
25	5.48 (0.2157)	31439-81X24	54	4.90 (0.1929)	31439-83X20
26	5.50 (0.2165)	31439-81X46	55	4.92 (0.1937)	31439-83X21
27	5.52 (0.2173)	31439-81X47	56	4.94 (0.1945)	31439-83X22
28	5.54 (0.2181)	31439-81X48	57	4.96 (0.1953)	31439-83X23
29	5.56 (0.2189)	31439-81X49	58	4.98 (0.1961)	31439-83X24

*: Always check with the Parts Department for the latest parts information.

Band Servo

NHAT0193

RETURN SPRING

NHAT0193S01

Unit: mm (in)

Return spring	Part number*	Free length	Outer diameter
2nd servo return spring	31605-31X20	32.5 (1.280)	25.9 (1.020)
O/D servo return spring	31605-80X07	62.6 (2.465)	31.7 (1.248)

*: Always check with the Parts Department for the latest parts information.

Output Shaft

NHAT0194

SEAL RING CLEARANCE

NHAT0194S01

Output shaft seal ring clearance mm (in)	Standard	0.10 - 0.25 (0.0039 - 0.0098)
	Allowable limit	0.25 (0.0098)

SEAL RING

NHAT0194S04

Outer diameter mm (in)	Inner diameter mm (in)	Width mm (in)	Part number*
33.711 (1.3272)	30.2 (1.189)	1.951 (0.0768)	31525-80X09

*: Always check with the Parts Department for the latest Parts information.

END PLAY

NHAT0194S02

Output shaft end play mm (in)	0 - 0.15 (0 - 0.0059)

OUTPUT SHAFT ADJUSTING SHIMS

NHAT0194S03

Thickness mm (in)	Part number*
0.80 (0.0315)	31438-80X60
0.84 (0.0331)	31438-80X61
0.88 (0.0346)	31438-80X62
0.92 (0.0362)	31438-80X63
0.96 (0.0378)	31438-80X64
1.00 (0.0394)	31438-80X65
1.04 (0.0409)	31438-80X66
1.08 (0.0425)	31438-80X67
1.12 (0.0441)	31438-80X68
1.16 (0.0457)	31438-80X69
1.20 (0.0472)	31438-80X70

*: Always check with the Parts Department for the latest parts information.

Bearing Retainer

NHAT0195

SEAL RING CLEARANCE

NHAT0195S01

Bearing retainer seal ring clearance mm (in)	Standard	0.10 - 0.30 (0.0039 - 0.0118)
	Allowable limit	0.30 (0.0118)

Total End Play

NHAT0196

Total end play mm (in)	0.25 - 0.55 (0.0098 - 0.0217)

BEARING RACE FOR ADJUSTING TOTAL END PLAY

NHAT0196S01

Thickness mm (in)	Part number*
0.8 (0.031)	31435-80X00
1.0 (0.039)	31435-80X01
1.2 (0.047)	31435-80X02
1.4 (0.055)	31435-80X03
1.6 (0.063)	31435-80X04
1.8 (0.071)	31435-80X05
2.0 (0.079)	31435-80X06
0.9 (0.035)	31435-80X09
1.1 (0.043)	31435-80X10
1.3 (0.051)	31435-80X11
1.5 (0.059)	31435-80X12
1.7 (0.067)	31435-80X13
1.9 (0.075)	31435-80X14

*: Always check with the Parts Department for the latest parts information.

Reverse Clutch End Play

NHAT0197

Reverse clutch end play mm (in)	0.55 - 0.90 (0.0217 - 0.0354)

THRUST WASHERS FOR ADJUSTING REVERSE CLUTCH DRUM END PLAY

NHAT0197S01

Thickness mm (in)	Part number*
0.80 (0.0315)	31508-80X13
0.95 (0.0374)	31508-80X14
1.10 (0.0433)	31508-80X15
1.25 (0.0492)	31508-80X16
1.40 (0.0551)	31508-80X17
1.55 (0.0610)	31508-80X18
1.70 (0.0669)	31508-80X19
1.85 (0.0728)	31508-80X20

*: Always check with the Parts Department for the latest parts information.

Removal and Installation

NHAT0198

Unit: mm (in)

Distance between end of converter housing and torque converter	14 (0.55)

Shift Solenoid Valves

NHAT0264

Gear position	1	2	3	4
Shift solenoid valve A	ON (Closed)	OFF (Open)	OFF (Open)	ON (Closed)
Shift solenoid valve B	ON (Closed)	ON (Closed)	OFF (Open)	OFF (Open)

Solenoid Valves

NHAT0265

Solenoid valves	Resistance (Approx.) Ω	Terminal No.
Shift solenoid valve A	20 - 30	2
Shift solenoid valve B	5 - 20	1
Overrun clutch solenoid valve	20 - 30	3
Line pressure solenoid valve	2.5 - 5	4
Torque converter clutch solenoid valve	5 - 20	5

A/T Fluid Temperature Sensor

NHAT0266

Remarks: Specification data are reference values.

Monitor item	Condition	Specification (Approximately)	
A/T fluid temperature sensor	Cold [20°C (68°F)] ↓ Hot [80°C (176°F)]	1.5V ↓ 0.5V	2.5 kΩ ↓ 0.3 kΩ

Revolution Sensor (For Speed Sensor)

NHAT0267

Condition	Judgement standard
When moving at 20 km/h (12 MPH), use the CONSULT-II pulse frequency measuring function.*1 **CAUTION:** **Connect the diagnosis data link cable to the vehicle diagnosis connector.** *1: A circuit tester cannot be used to test this item.	450 Hz (Approx.)
When vehicle parks.	0V

Dropping Resistor

NHAT0268

Resistance	Approx. 12Ω

Power Train Revolution Sensor

NHAT0271

Condition	Judgement standard
When moving at 20 km/h (12 MPH), use the CONSULT-II pulse frequency measuring function.*1 **CAUTION:** **Connect the diagnosis data link cable to the vehicle diagnosis connector.** *1: A circuit tester cannot be used to test this item.	240 Hz (Approx.)
When vehicle parks.	Under 1.3V or over 4.5V