MAINTENANCE

MA

SECTION MA

CONTENTS

Supplemental Restraint System (SRS) ‘‘AIR BAG’’ (4WD models)

The Supplemental Restraint System ‘‘AIR BAG’’, used along with a seat belt, helps to reduce the risk or severity of injury to the driver in a frontal collision. The Supplemental Restraint System consists of air bag module (located in the center of the steering wheel), a diagnosis sensor unit, warning lamp, wiring harness and spiral cable. Information necessary to service the system safely is included in the **RS section** of this Service Manual.

WARNING:

- **To avoid rendering the SRS inoperative, which could increase the risk of personal injury or death in the event of a collision which would result in air bag inflation, all maintenance must be performed by an authorized NISSAN dealer.**
- **Improper maintenance, including incorrect removal and installation of the SRS, can lead to personal injury caused by unintentional activation of the system.**
- **Do not use electrical test equipment on any circuit related to the SRS unless instructed to in this Service Manual. SRS wiring harnesses are covered with yellow insulation either just before the harness connectors or for the complete harness, for easy identification.**

Supplemental Restraint System (SRS) ‘‘AIR BAG’’ (2WD models)

The Supplemental Restraint System ‘‘AIR BAG’’, used along with a seat belt, helps to reduce the risk or severity of injury to the driver in a frontal collision. The Supplemental Restraint System consists of an air bag module (located in the center of the steering wheel), a diagnosis sensor unit, warning lamp, wiring harness and spiral cable. Information necessary to service the system safely is included in the **RS section** of this Service Manual.

WARNING:

- **To avoid rendering the SRS inoperative, which could increase the risk of personal injury or death in the event of a collision which would result in air bag inflation, all maintenance must be performed by an authorized NISSAN dealer.**
- **Improper maintenance, including incorrect removal and installation of the SRS, can lead to personal injury caused by unintentional activation of the system.**
- **Do not use electrical test equipment on any circuit related to the SRS.**

Special Service Tools

Tool number Tool name	Description	Engine application	
		KA	TD
KV10106001 Oil filter wrench	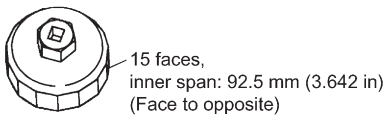 NT690 Removing oil filter	—	X
KV10105901 Oil filter cap wrench	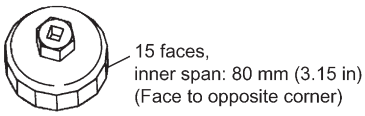 NT689	X	—
EG17650301 Radiator cap tester adapter	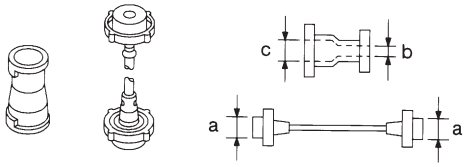 NT564 **a: 28 (1.10) dia.** **b: 31.4 (1.236) dia.** **c: 41.3 (1.626) dia.** Unit: mm (in)	X	X
KV10113600 Fuel filter wrench	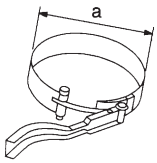 NT553 Removing fuel filter **a: Max. 100 mm (3.94 in) dia.**	—	X

Commercial Service Tools

Tool name	Description	Engine application	
		KA	TD
Spark plug wrench	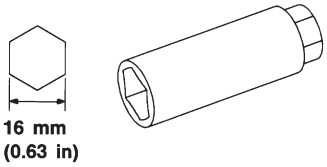 NT047 Wrench with a magnet to hold spark plug	X	—

Shown below are Pre-delivery Inspection Items required for the new vehicle. It is recommended that necessary items other than those listed here be added, paying due regard to the conditions in each country.

Perform applicable items on each model. Consult text of this section for specifications.

UNDER HOOD — engine off

- ☐ Radiator coolant level and coolant hose connections for leaks
- ☐ Battery fluid level, specific gravity and conditions of battery terminals
- ☐ Drive belts tension
- ☐ Fuel filter for water or dusts, and fuel lines and connections for leaks
- ☐ Engine oil level and oil leaks
- ☐ Clutch and brake reservoir fluid level and fluid lines for leaks
- ☐ Windshield and rear window washer and headlamp cleaner reservoir fluid level
- ☐ Power steering reservoir fluid level and hose connections for leaks

ON INSIDE AND OUTSIDE

- ☐ Remove front spring/strut spacer (If applicable)
- ☐ Operation of all instruments, gauges, lights and accessories
- ☐ Operation of horn(s), wiper and washer
- ☐ Steering lock for operation
- ☐ Check air conditioner for gas leaks
- ☐ Front and rear seats, and seat belts for operation
- ☐ All moldings, trims and fittings for fit and alignment
- ☐ All windows for operation and alignment
- ☐ Hood, trunk lid, door panels for fit and alignment
- ☐ Latches, keys and locks for operation
- ☐ Weatherstrips for adhesion and fit
- ☐ Headlamp aiming
- ☐ Tighten wheel nuts (Inc. inner nuts if applicable)
- ☐ Tire pressure (Inc. spare tire)
- ☐ Check front wheels for toe-in
- ☐ Install clock/voltmeter/room lamp fuse (If applicable)

UNDER BODY

- ☐ Manual transmission/transaxle gear oil, transfer fluid and differential gear oil level
- ☐ Brake and fuel lines and oil/fluid reservoirs for leaks
- ☐ Tighten bolts and nuts of steering linkage and gear box, suspension, propeller shafts and drive shafts

ROAD TEST

- ☐ Clutch operation
- ☐ Parking brake operation
- ☐ Service brake operation
- ☐ Steering control and returnability
- ☐ Engine performance
- ☐ Squeaks and rattles

ENGINE OPERATING AND HOT

- ☐ Adjust idle mixture and speed (and ignition timing*1)
- ☐ Engine idling and stop knob operation (Diesel only)

FINAL INSPECTION

- ☐ Install necessary parts (outside mirror, wheel covers, seat belts, mat, carpet or mud flaps)
- ☐ Inspect for interior and exterior metal and paint damage
- ☐ Check for spare tire, jack, tools (wheel chock), and literature
- ☐ Wash, clean interior and exterior

*1: Not required on models with a direct ignition system

☒ : Not applicable to this model.

General maintenance includes those items which should be checked during the normal day-to-day operation of the vehicle. They are essential if the vehicle is to continue operating properly. The owners can perform the checks and inspections themselves or they can have their NISSAN dealers do them.

Item	Reference pages
OUTSIDE THE VEHICLE The maintenance items listed here should be performed from time to time, unless otherwise specified.	
Tires Check the pressure with a gauge periodically when at a service station, including the spare, and adjust to the specified pressure if necessary. Check carefully for damage, cuts or excessive wear.	—
Windshield wiper blades Check for cracks or wear if they do not wipe properly.	—
Doors and engine hood Check that all doors, the engine hood, the trunk lid and back door operate properly. Also ensure that all latches lock securely. Lubricate hinges, latches, rollers and links if necessary. Make sure that the secondary latch keeps the hood from opening when the primary latch is released. When driving in areas using road salt or other corrosive materials, check for lubrication frequently.	MA-39
Tire rotation Tires should be rotated every 10,000 km (6,000 miles) for 2WD models and every 5,000 km (3,000 miles) for 4WD models.	MA-35
INSIDE THE VEHICLE The maintenance items listed here should be checked on a regular basis, such as when performing periodic maintenance, cleaning the vehicle, etc.	
Lights Make sure that the headlights, stop lights, tail lights, turn signal lights, and other lights are all operating properly and installed securely. Also check headlight aim.	—
Warning lights and chimes Make sure that all warning lights and chimes are operating properly.	—
Steering wheel Check for change in the steering conditions, such as excessive free play, hard steering or strange noises. **Free play: Less than 35 mm (1.38 in)**	—
Seat belts Check that all parts of the seat belt system (e.g. buckles, anchors, adjusters and retractors) operate properly and smoothly, and are installed securely. Check the belt webbing for cuts, fraying, wear or damage.	MA-40
UNDER THE HOOD AND VEHICLE The maintenance items listed here should be checked periodically e.g. each time you check the engine oil or refuel.	
Windshield washer fluid Check that there is adequate fluid in the tank.	—
Engine coolant level Check the coolant level when the engine is cold.	MA-16, 25
Engine oil level Check the level after parking the vehicle on a level spot and turning off the engine.	MA-19, 24
Brake and clutch fluid level Make sure that the brake and clutch fluid levels are between the ‘‘MAX’’ and ‘‘MIN’’ lines on the reservoir.	MA-32, 35
Battery Check the fluid level in each cell. It should be between the ‘‘MAX’’ and ‘‘MIN’’ lines.	—

Depending on annual driving distance and engine types, different basic schedules are introduced here. Please follow the appropriate schedule for the vehicle. Furthermore, according to the weather and atmospheric conditions, varying road surfaces, individual driving habits and vehicle usage, additional or more frequent maintenance may be required, as shown in ‘‘Maintenance Under Severe Driving Conditions’’.

Periodic maintenance beyond the last period shown on the tables requires similar maintenance.

Basic Schedule for Gasoline Engine Models

Engine maintenance for vehicles which drive less than 30,000 km/year (18,000 miles/year)

Abbreviations: R= Replace, I = Inspect and correct or replace as necessary.

MAINTENANCE OPERATION	MAINTENANCE INTERVAL							
Perform at kilometer (mile) interval or month interval, whichever comes first.	km x 1,000	15	30	45	60	75	90	Reference page
	(Miles x 1,000)	(9)	(18)	(27)	(36)	(45)	(54)	
	Months	**12**	**24**	**36**	**48**	**60**	**72**	
Engine oil (Use API SG or SH oil)*		R	R	R	R	R	R	MA-19
Engine oil filter*		R	R	R	R	R	R	MA-20
Drive belts		I	I	I	I	I	I	MA-15
Engine anti-freeze coolant (Ethylene glycol base)	See NOTE (1)							MA-16
Cooling system		I	I	I	I	I	I	MA-17
Air cleaner filter (Viscous paper type)*					R			MA-19
Fuel lines			I		I		I	MA-18
Fuel filter*							R	MA-18
Vapor lines			I		I		I	MA-22
Spark plugs (Conventional type)			R		R		R	MA-20
Ignition wires				I			I	MA-21
Heated oxygen sensor (Exhaust gas sensor)			I		I		I	MA-22
PCV filter*			R		R		R	MA-21

NOTE: (1) Replace at the first 90,000 km (54,000 miles) or 60 months, then every 60,000 km (36,000 miles) or 48 months, whichever comes first.

* Maintenance item with ‘‘*’’ should be performed more frequently according to ‘‘Maintenance Under Severe Driving Conditions’’.

Basic Schedule for Gasoline Engine Models (Cont'd)

Chassis and body maintenance for vehicles which drive less than 30,000 km/year (18,000 miles/year)

Abbreviations: R= Replace, I = Inspect and correct or replace as necessary, L = Lubricate, T = Tighten. [ ] = At the specified distance only.

MAINTENANCE OPERATION	MAINTENANCE INTERVAL							
Perform at kilometer (mile) interval or month interval, whichever comes first.	km x 1,000	15	30	45	60	75	90	Reference page
	(Miles x 1,000)	(9)	(18)	(27)	(36)	(45)	(54)	
	Months	**12**	**24**	**36**	**48**	**60**	**72**	
Headlamp aiming		I	I	I	I	I	I	NOTE (3)
Wheel alignment (If necessary, rotate & balance wheels)		I	I	I	I	I	I	MA-35, NOTE (4)
Brake pads, discs & other brake components*		I	I	I	I	I	I	MA-36
Brake linings, drums & other brake components*		I	I	I	I	I	I	MA-36
Foot brake, parking brake & clutch (For free play, stroke & operation)		I	I	I	I	I	I	NOTE (5)
Brake booster vacuum hoses, connections & check valve			I		I		I	MA-36
Brake & clutch systems		I	I	I	I	I	I	MA-32, 35
Brake & clutch fluid (For level & leaks)		I	I	I	I	I	I	MA-32, 35
Brake fluid*			R		R		R	MA-35
Power steering fluid & lines (For level & leaks)		I	I	I	I	I	I	MA-37
Manual steering gear oil (For level & leaks)		I	I	I	I	I	I	MA-38
Air bag system	See NOTE (1)							NOTE (6)
Manual transmission oil (Inspect for leaks or replace)		I	I	I	I	I	[R]	MA-32
Transfer fluid and standard differential gear oil (For leaks)*		I	I	I	R	I	I	MA-33, 34
Limited-slip differential (LSD) gear oil (For level and leaks)*		I	I	I	R	I	I	MA-34
Steering gear, linkage, axle, suspension parts & propeller shaft*		I	I	I	I	I	I	MA-37, 33
Greasing point of steering linkage, propeller shaft & suspension*	See NOTE (2)	L	L	L	L	L	L	MA-33
Exhaust system*		I	I	I	I	I	I	MA-32
Drive shaft*		I	I	I	I	I	I	NOTE (7)
Front wheel bearing grease (2WD models)			I		I		I	NOTE (8)
Front wheel bearing grease (4WD models)*		I	R	I	R	I	R	NOTE (8)
Free-running hub grease (4WD models)*		I	I	I	I	I	I	NOTE (9)
Body mountings		T	T	T	T	T	T	NOTE (10)
Body corrosion				Annually				MA-41

NOTE: (1) Inspect at the first 10 years, and then every 2 years.
(2) The propeller shaft should be re-greased daily if it is immersed in water.
(3) ''Aiming Adjustment'' in EL section
(4) ''Front Wheel Alignment'' in FA section
(5) ''Brake Pedal and Bracket'' in BR section, ''Adjusting Clutch Pedal'' in CL section
(6) ''Maintenance Items'' in RS section
(7) ''FRONT AXLE — Drive Shaft'' in FA section
(8) ''Front Wheel Bearing'' in FA section
(9) ''Manual-lock Free-running Hub — 4WD'' and ''Auto-lock Free-running Hub — 4WD'' in FA section
(10) ''CAB AND REAR BODY'' in BT section

* Maintenance item with ''*'' should be performed more frequently according to ''Maintenance Under Severe Driving Conditions''.

Basic Schedule for Gasoline Engine Models (Cont'd)

Engine maintenance for vehicles which drive more than 30,000 km/year (18,000 miles/year)

Abbreviations: R= Replace, I = Inspect and correct or replace as necessary.

MAINTENANCE OPERATION	MAINTENANCE INTERVAL									Reference page
Perform at kilometer (mile) interval.	km x 1,000 (Miles x 1,000)	15 (9)	30 (18)	45 (27)	60 (36)	75 (45)	90 (54)	105 (63)	120 (72)	
Engine oil (Use API SG or SH oil)*		R	R	R	R	R	R	R	R	MA-19
Engine oil filter*		R	R	R	R	R	R	R	R	MA-20
Drive belts		I	I	I	I	I	I	I	I	MA-15
Engine anti-freeze coolant (Ethylene glycol base)	See NOTE (1)						R			MA-16
Cooling system			I		I		I		I	MA-17
Air cleaner filter (Viscous paper type)*					R				R	MA-19
Fuel lines					I				I	MA-18
Fuel filter*							R			MA-18
Vapor lines					I				I	MA-22
Spark plugs (Conventional type)			R		R		R		R	MA-20
Ignition wires							I			MA-21
Heated oxygen sensor (Exhaust gas sensor)					I				I	MA-22
PCV filter*					R				R	MA-21

NOTE: (1) Replace at the first 90,000 km (54,000 miles), then every 60,000 km (36,000 miles).
* Maintenance item with "*" should be performed more frequently according to "Maintenance Under Severe Driving Conditions".

Chassis and body maintenance for vehicles which drive more than 30,000 km/year (18,000 miles/year)

Abbreviations: R= Replace, I = Inspect and correct or replace as necessary, L = Lubricate, T = Tighten.

MAINTENANCE OPERATION	MAINTENANCE INTERVAL									Reference page
Perform at kilometer (mile) interval.	km x 1,000 (Miles x 1,000)	15 (9)	30 (18)	45 (27)	60 (36)	75 (45)	90 (54)	105 (63)	120 (72)	
Headlamp aiming			I		I		I		I	NOTE (3)
Wheel alignment (If necessary, rotate & balance wheels)			I		I		I		I	MA-35, NOTE (4)
Brake pads, discs & other brake components*			I		I		I		I	MA-36
Brake linings, drums & other brake components*			I		I		I		I	MA-36
Foot brake, parking brake & clutch (For free play, stroke & operation)			I		I		I		I	NOTE (5)
Brake booster vacuum hoses, connections & check valve					I				I	MA-36
Brake & clutch systems			I		I		I		I	MA-32, 35
Brake & clutch fluid (For level & leaks)			I		I		I		I	MA-32, 35
Brake fluid*					R				R	MA-35
Power steering fluid & lines (For level & leaks)			I		I		I		I	MA-37
Manual steering gear oil (For level & leaks)			I		I		I		I	MA-38
Air bag system	See NOTE (1)									NOTE (6)
Manual transmission oil (Inspect for leaks or replace)			I		I		R		I	MA-32
Transfer fluid and standard differential gear oil (For leaks)*			I		R		I		R	MA-33, 34
Limited-slip differential (LSD) gear oil (For level and leaks)*			I		R		I		R	MA-34
Steering gear, linkage, axle, suspension parts & propeller shaft*			I		I		I		I	MA-37, 33
Greasing point of steering linkage, propeller shaft & suspension*	See NOTE (2)		L		L		L		L	MA-33
Exhaust system*			I		I		I		I	MA-32
Drive shaft*			I		I		I		I	NOTE (7)
Front wheel bearing grease (2WD models)					I				I	NOTE (8)
Front wheel bearing grease (4WD models)*			I		R		I		R	NOTE (8)
Free-running hub grease (4WD models)*			I		I		I		I	NOTE (9)
Body mountings			T		T		T		T	NOTE (10)
Body corrosion					Annually					MA-41

NOTE: (1) Inspect at the first 10 years, and then every 2 years.
(2) The propeller shaft should be re-greased daily if it is immersed in water.
(3) "Aiming Adjustment" in EL section
(4) "Front Wheel Alignment" in FA section
(5) "Brake Pedal and Bracket" in BR section, "Adjusting Clutch Pedal" in CL section
(6) "Maintenance Items" in RS section
(7) "FRONT AXLE — Drive Shaft" in FA section
(8) "Front Wheel Bearing" in FA section
(9) "Manual-lock Free-running Hub — 4WD" and "Auto-lock Free-running Hub — 4WD" in FA section
(10) "CAB AND REAR BODY" in BT section
* Maintenance item with "*" should be performed more frequently according to "Maintenance Under Severe Driving Conditions".

Basic Schedule for Diesel Engine Models

Engine maintenance for vehicles which drive less than 30,000 km/year (18,000 miles/year)

Abbreviations: R= Replace, I = Inspect and correct or replace as necessary. [ ] = At the specified distance only.

MAINTENANCE OPERATION	MAINTENANCE INTERVAL													
Perform at kilometer (mile) interval or month interval, whichever comes first.	km x 1,000	7.5	15	22.5	30	37.5	45	52.5	60	67.5	75	82.5	90	Reference page
	(Miles x 1,000)	(4.5)	(9)	(13.5)	(18)	(22.5)	(27)	(31.5)	(36)	(40.5)	(45)	(49.5)	(54)	
	Months	**6**	**12**	**18**	**24**	**30**	**36**	**42**	**48**	**54**	**60**	**66**	**72**	
Engine oil (Use recommended oil)*		R	R	R	R	R	R	R	R	R	R	R	R	MA-24
Engine oil filter*		R	R	R	R	R	R	R	R	R	R	R	R	MA-24
Drive belts			I		I		I		I		I		I	MA-23
Engine anti-freeze coolant (Ethylene glycol base)	See NOTE (1)										R			MA-25
Cooling system			I		I		I		I		I		I	MA-26
Air cleaner filter (Viscous paper type)*							R						R	MA-29
Intake & exhaust valve clearance					I				I				I	MA-23
Fuel lines					I				I				I	MA-28
Fuel filter*					R				R				R	MA-27
Injection nozzles	See NOTE (2)													MA-29

NOTE: (1) Replace at the first 75,000 km (45,000 miles) or 60 months, then every 45,000 km (27,000 miles) or 36 months, whichever comes first.
(2) If engine power decreases, black exhaust is emitted or engine noise increases, inspect and if necessary, adjust the fuel injection nozzles starting pressure and the spray pattern.
* Maintenance item with ''*'' should be performed more frequently according to ''Maintenance Under Severe Driving Conditions''.

Chassis and body maintenance for vehicles which drive less than 30,000 km/year (18,000 miles/year)

Abbreviations: R= Replace, I = Inspect and correct or replace as necessary, L = Lubricate, T = Tighten. [ ] = At the specified distance only.

MAINTENANCE OPERATION	MAINTENANCE INTERVAL						
Perform at kilometer (mile) interval or month interval, whichever comes first.	km x 1,000	15	30	45	60	75	90	Reference page
	(Miles x 1,000)	(9)	(18)	(27)	(36)	(45)	(54)	
	Months	**12**	**24**	**36**	**48**	**60**	**72**	
Headlamp aiming		I	I	I	I	I	I	NOTE (3)
Wheel alignment (if necessary, rotate & balance wheels)		I	I	I	I	I	I	MA-35, NOTE (4)
Brake pads, discs & other brake components*		I	I	I	I	I	I	MA-36
Brake linings, drums & other brake components*		I	I	I	I	I	I	MA-36
Foot brake, parking brake & clutch (For free play, stroke & operation)		I	I	I	I	I	I	NOTE (5)
Brake booster vacuum hoses, connections & check valve			I		I		I	MA-36
Brake & clutch systems		I	I	I	I	I	I	MA-32, 35
Brake & clutch fluid (For level & leaks)		I	I	I	I	I	I	MA-32, 35
Brake fluid*			R		R		R	MA-35
Power steering fluid & lines (For level & leaks)		I	I	I	I	I	I	MA-37
Manual steering gear oil (For level & leaks)		I	I	I	I	I	I	MA-38
Air bag system	See NOTE (1)							NOTE (6)
Manual transmission oil (Inspect for leaks or replace)		I	I	I	I	I	[R]	MA-32
Transfer fluid and standard differential gear oil (for leaks)*		I	I	I	R	I	I	MA-33, 34
Limited-slip differential (LSD) gear oil (For level and leaks)*		I	I	I	R	I	I	MA-34
Steering gear, linkage, axle, suspension parts & propeller shaft*		I	I	I	I	I	I	MA-37, 33
Greasing point of steering linkage, propeller shaft & suspension*	See NOTE (2)	L	L	L	L	L	L	MA-33
Exhaust system*		I	I	I	I	I	I	MA-32
Drive shaft*		I	I	I	I	I	I	NOTE (7)
Front wheel bearing grease (2WD models)			I		I		I	NOTE (8)
Front wheel bearing grease (4WD models)*		I	R	I	R	I	R	NOTE (8)
Free-running hub grease (4WD models)*		I	I	I	I	I	I	NOTE (9)
Body mountings		T	T	T	T	T	T	NOTE (10)
Body corrosion			Annually					MA-41

NOTE: (1) Inspect at the first 10 years, and then every 2 years.
(2) The propeller shaft should be re-greased daily if it is immersed in water.
(3) ''Aiming Adjustment'' in EL section
(4) ''Front Wheel Alignment'' in FA section
(5) ''Brake Pedal and Bracket'' in BR section, ''Adjusting Clutch Pedal'' in CL section
(6) ''Maintenance Items'' in RS section
(7) ''FRONT AXLE — Drive Shaft'' in FA section
(8) ''Front Wheel Bearing'' in FA section
(9) ''Manual-lock Free-running Hub — 4WD'' and ''Auto-lock Free-running Hub — 4WD'' in FA section
(10) ''CAB AND REAR BODY'' in BT section
* Maintenance item with ''*'' should be performed more frequently according to ''Maintenance Under Severe Driving Conditions''.

Basic Schedule for Diesel Engine Models (Cont'd)

Engine maintenance for vehicles which drive more than 30,000 km/year (18,000 miles/year)

Abbreviations: R= Replace, I = Inspect and correct or replace as necessary.

MAINTENANCE OPERATION	MAINTENANCE INTERVAL													Reference page
Perform at kilometer (mile) interval.	km x 1,000 (Miles x 1,000)	7.5 (4.5)	15 (9)	22.5 (13.5)	30 (18)	37.5 (22.5)	45 (27)	52.5 (31.5)	60 (36)	67.5 (40.5)	75 (45)	82.5 (49.5)	90 (54)	
Engine oil (Use recommended oil)*		R	R	R	R	R	R	R	R	R	R	R	R	MA-24
Engine oil filter*		R	R	R	R	R	R	R	R	R	R	R	R	MA-24
Drive belts			I		I		I		I		I		I	MA-23
Engine anti-freeze coolant (Ethylene glycol base)	See NOTE (1)												R	MA-25
Cooling system					I				I				I	MA-26
Air cleaner filter (Viscous paper type)*									R					MA-29
Intake & exhaust valve clearance					I				I				I	MA-23
Fuel lines									I					MA-28
Fuel filter*									R					MA-27
Injection nozzles	See NOTE (2)													MA-29

NOTE: (1) Replace at the first 90,000 km (54,000 miles), then every 60,000 km (36,000 miles).
(2) If engine power decreases, black exhaust is emitted or engine noise increases, inspect and if necessary, adjust the fuel injection nozzles starting pressure and the spray pattern.
* Maintenance item with "*" should be performed more frequently according to "Maintenance Under Severe Driving Conditions".

Chassis and body maintenance for vehicles which drive more than 30,000 km/year (18,000 miles/year)

Abbreviations: R= Replace, I = Inspect and correct or replace as necessary, L = Lubricate, T = Tighten.

MAINTENANCE OPERATION	MAINTENANCE INTERVAL					Reference page
Perform at kilometer (mile) interval.	km x 1,000 (Miles x 1,000)	30 (18)	60 (36)	90 (54)	120 (72)	
Headlamp aiming		I	I	I	I	NOTE (3)
Wheel alignment (if necessary, rotate & balance wheels)		I	I	I	I	MA-35, NOTE (4)
Brake pads, discs & other brake components*		I	I	I	I	MA-36
Brake linings, drums & other brake components*		I	I	I	I	MA-36
Foot brake, parking brake & clutch (For free play, stroke & operation)		I	I	I	I	NOTE (5)
Brake booster vacuum hoses, connections & check valve			I		I	MA-36
Brake & clutch systems		I	I	I	I	MA-32, 35
Brake & clutch fluid (For level & leaks)		I	I	I	I	MA-32, 35
Brake fluid*			R		R	MA-35
Power steering fluid & lines (For level & leaks)		I	I	I	I	MA-37
Manual steering gear oil (For level & leaks)		I	I	I	I	MA-38
Air bag system	See NOTE (1)					NOTE (6)
Manual transmission oil (Inspect for leaks or replace)		I	I	R	I	MA-32
Transfer fluid and standard differential gear oil (for leaks)*		I	R	I	R	MA-33, 34
Limited-slip differential (LSD) gear oil (For level and leaks)*		I	R	I	R	MA-34
Steering gear, linkage, axle, suspension parts & propeller shaft*		I	I	I	I	MA-37, 33
Greasing point of steering linkage, propeller shaft & suspension*	See NOTE (2)	L	L	L	L	MA-33
Exhaust system*		I	I	I	I	MA-32
Drive shaft*		I	I	I	I	NOTE (7)
Front wheel bearing grease (2WD models)			I		I	NOTE (8)
Front wheel bearing grease (4WD models)*		I	R	I	R	NOTE (8)
Free-running hub grease (4WD models)*		I	I	I	I	NOTE (9)
Body mountings		T	T	T	T	NOTE (10)
Body corrosion			Annually			MA-41

NOTE: (1) Inspect at the first 10 years, and then every 2 years.
(2) The propeller shaft should be re-greased daily if it is immersed in water.
(3) "Aiming Adjustment" in EL section
(4) "Front Wheel Alignment" in FA section
(5) "Brake Pedal and Bracket" in BR section, "Adjusting Clutch Pedal" in CL section
(6) "Maintenance Items" in RS section
(7) "FRONT AXLE — Drive Shaft" in FA section
(8) "Front Wheel Bearing" in FA section
(9) "Manual-lock Free-running Hub — 4WD" and "Auto-lock Free-running Hub — 4WD" in FA section
(10) "CAB AND REAR BODY" in BT section
* Maintenance item with "*" should be performed more frequently according to "Maintenance Under Severe Driving Conditions".

Maintenance Under Severe Driving Conditions

The maintenance intervals shown on the preceding pages are for normal operating conditions. If the vehicle is mainly operated under severe driving conditions as shown below, more frequent maintenance must be performed on the following items as shown in the table.

Severe driving conditions

A — Driving under dusty conditions
B — Driving repeatedly short distances
C — Towing a trailer or caravan
D — Extensive idling
E — Driving in extremely adverse weather conditions or in areas where ambient temperatures are either extremely low or extremely high
F — Driving in high humidity areas or in mountainous areas
G — Driving in areas using salt or other corrosive materials
H — Driving on rough and/or muddy roads or in the desert
I — Driving with frequent use of braking or in mountainous areas
J — Frequent driving in water

For gasoline engine models

Maintenance operation: Inspect = Inspect and correct or replace as necessary.

Driving condition	Maintenance item	Maintenance operation	Maintenance interval: Annual driving distance: Less than 30,000 km (18,000 miles)	Maintenance interval: Annual driving distance: More than 30,000 km (18,000 miles)	Reference page
A B C D	Engine oil	Replace	Every 3,750 km (2,250 miles) or 3 months	Every 3,750 km (2,250 miles)	MA-19
	Engine oil filter				
A	Air cleaner filter (Viscous paper type)	Replace	Every 30,000 km (18,000 miles) or 24 months	Every 30,000 km (18,000 miles)	MA-19
	PCV filter	Replace	Every 15,000 km (9,000 miles) or 12 months	Every 30,000 km (18,000 miles)	MA-21
A . . . E	Fuel filter	Replace	Every 45,000 km (27,000 miles) or 36 months	Every 45,000 km (27,000 miles)	MA-18
A . C . . . G H I .	Brake pads, discs & other brake components	Inspect	Every 7,500 km (4,500 miles) or 6 months	Every 15,000 km (9,000 miles)	MA-36
	Brake linings, drums & other brake components				MA-36
. . . . . F	Brake fluid	Replace	Every 15,000 km (9,000 miles) or 12 months	Every 30,000 km (18,000 miles)	MA-35
. . C . . . . H . .	Transfer fluid and standard differential gear oil	Replace	Every 30,000 km (18,000 miles) or 24 months	Every 30,000 km (18,000 miles)	MA-33, 34
	Limited-slip differential (LSD) gear oil*1	Replace			MA-34
	Drive shaft	Inspect	Every 7,500 km (4,500 miles) or 6 months	Every 15,000 km (9,000 miles)	*2
. . . . . G H . .	Steering gear, linkage, axle, suspension parts, and propeller shafts	Inspect			MA-37, 33
	Exhaust system	Inspect			MA-32
. . . . . G H . J	Greasing points of steering linkage, propeller shafts, & suspension	Lubricate			MA-33
. . . . . J	Front wheel bearing grease	Inspect			*3
	Free running hub grease	Inspect			

*1: Including differential gear with differential lock
*2: ‘‘FRONT AXLE — Drive Shaft’’ in FA section
*3: ‘‘Front Wheel Bearing’’, ‘‘Manual-lock Free-running Hub — 4WD’’ and ‘‘Auto-lock Free-running Hub — 4WD’’ in FA section

Maintenance Under Severe Driving Conditions (Cont'd)

For diesel engine models

Maintenance operation: Inspect = Inspect and correct or replace as necessary.

Driving condition	Maintenance item	Maintenance operation	Maintenance interval: Annual driving distance: Less than 30,000 km (18,000 miles)	Maintenance interval: Annual driving distance: More than 30,000 km (18,000 miles)	Reference page
A B C D	Engine oil	Replace	Every 3,250 km (2,250 miles) or 3 months	Every 3,250 km (2,250 miles)	MA-24
A B C D	Engine oil filter	Replace	Every 7,500 km (4,500 miles) or 6 months	Every 7,500 km (4,500 miles)	MA-24
A	Air cleaner filter (Viscous paper type)	Replace	Every 22,500 km (13,500 miles) or 18 months	Every 30,000 km (18,000 miles)	MA-29
A . . . E	Fuel filter	Replace	Every 15,000 km (9,000 miles) or 12 months	Every 30,000 km (18,000 miles)	MA-27
A . C . . . G H I .	Brake pads, discs & other brake components	Inspect	Every 7,500 km (4,500 miles) or 6 months	Every 15,000 km (9,000 miles)	MA-36
	Brake linings, drums & other brake components				MA-36
. . . . . F	Brake fluid	Replace	Every 15,000 km (9,000 miles) or 12 months	Every 30,000 km (18,000 miles)	MA-35
. . C . . . . H . .	Transfer fluid and standard differential gear oil	Replace	Every 30,000 km (18,000 miles) or 24 months	Every 30,000 km (18,000 miles)	MA-33, 34
	Limited-slip differential (LSD) gear oil*1	Replace			Ma-34
	Drive shaft	Inspect	Every 7,500 km (4,500 miles) or 6 months	Every 15,000 km (9,000 miles)	*2
. . . . . G H . .	Steering gear, linkage, axle, suspension parts, and propeller shafts	Inspect			MA-37, 33
	Exhaust system	Inspect			MA-32
. . . . . G H . J	Greasing points of steering linkage, propeller shafts, & suspension	Lubricate			MA-33
. . . . . J	Front wheel bearing grease	Inspect			*3
	Free running hub grease	Inspect			

*1: Including differential gear with differential lock
*2: ''FRONT AXLE — Drive Shaft'' in FA section
*3: ''Front Wheel Bearing'', ''Manual-lock Free-running Hub — 4WD'' and ''Auto-lock Free-running Hub — 4WD'' in FA section

Maintenance for off-road driving (for 4WD models only)

Whenever you drive off-road through sand, mud or water as deep as the wheel hub, more frequent maintenance may be required of the following items:

- ▲ Brake pads and discs
- ▲ Brake lining and drums
- ▲ Brake lines and hoses
- ▲ Wheel bearing grease and free-running hub grease
- ▲ Free running hub grease
- ▲ Differential, transmission oil and transfer fluid
- ▲ Steering linkage
- ▲ Propeller shafts and front drive shafts
- ▲ Air cleaner filter
- ▲ Clutch housing (Check water entry. Refer to MA-33.)

Fluids and Lubricants

		Capacity (Approximate)		Recommended Fluids/Lubricants
		Liter	Imp qt	
Engine oil (Refill)				
With oil filter	KA24E	2WD 3.9 4WD 4.1	3-3/8 qt 3-5/8 qt	Gasoline engine: API SG or SH*1 Diesel engine: API CD*1
	TD25	7.2	6-3/8 qt	
Without oil filter	KA24E	2WD 3.5 4WD 3.7	3-1/8 qt 3-1/4 qt	
	TD25	6.5	5-3/4 qt	
Cooling system (With reservoir)				
	KA24E	6.7	5-7/8 qt	Anti-freeze coolant (Ethylene glycol base) or soft water
	TD25	9.5	8-3/8 qt	
Manual transmission gear oil				
	FS5R30A	4WD 5.1	9 pt	API GL-4*1
	FS5W71C	2WD 2.0 4WD 4.9	3-1/2 pt 8-5/8 pt	
Transfer fluid	TX10A	2.2	2 qt	Nissan Matic ‘‘D’’ or Equivalent Automatic Transmission Fluid*2 or API GL-4*1
Differential gear oil				
Front:	R180A	1.3	2-1/4	Standard differential gear: API GL-5*1 Limited-slip differential (LSD) gear: Gear Oil Hypoid LSD (Part No.: KLD31-14002) or equivalent*3
Rear:	H233B	2.8	2 - 1/2	
	C200	1.3	1 - 1/8	
Power steering fluid		–	–	Type DEXRON™IIE, DEXTRON™III or equivalent
Brake and clutch fluid		–	–	For Europe: DOT 3 or DOT 4 (US FMVSS No. 116)*5 Except for Europe: DOT 3 (US FMVSS No. 116)
Propeller shaft grease		–	–	NLGI No. 2 (Molybdenum disulphide lithium soap base)
Multi-purpose grease		–	–	NLGI No. 2 (Lithium soap base)

*1: For further details, see ‘‘SAE Viscosity Number’’.
*2: Contact a NISSAN dealership for more information regarding suitable fluid, including recommended brand(s) of DEXRON™III/ MERCON™ Automatic Transmission Fluid.
*3: API GL-5, SAE 140 and 10% volume of LSD Friction Modifier (Part No.: 38469-C6000) is an equivalent.
*4: Never mix DOT 3 and DOT 4. (DOT 3 is filled at factory.)

SAE Viscosity Number

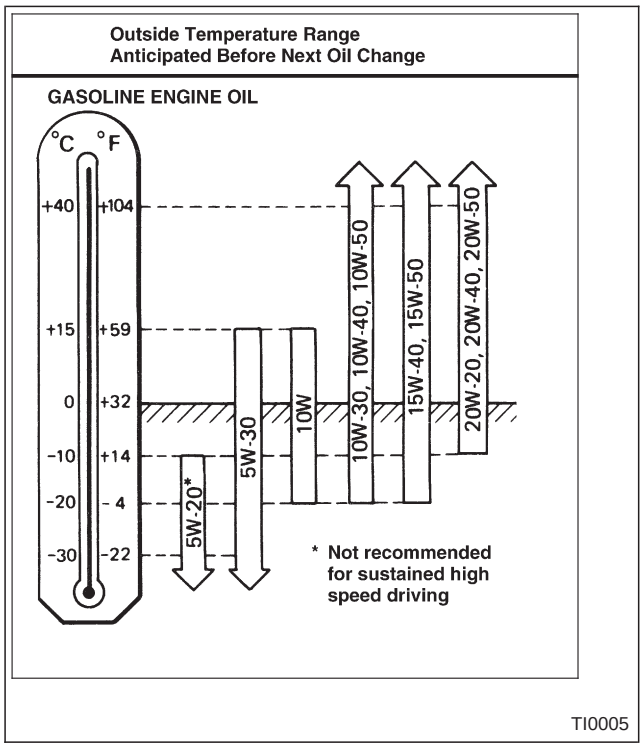

- **For warm and cold areas: 10W-30 is preferable for ambient temperatures above −20°C (−4°F).**
- **For hot areas: 20W-20, 20W-40 and 20W-50 are suitable.**

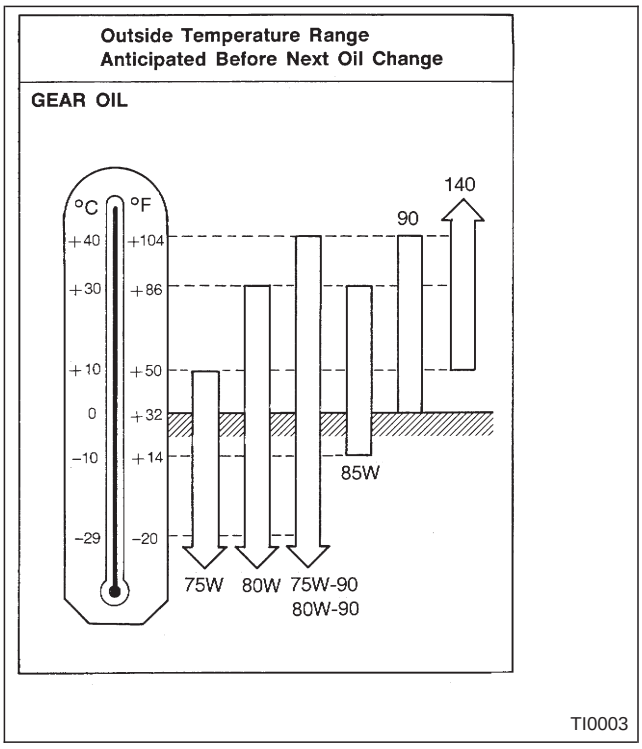

- **For warm and cold areas: 75W-90 for transfer and 80W-90 for differential are preferable.**
- **For hot areas: 90 is suitable for ambient temperatures below 40°C (104°F).**
- **For all areas: 75W-90 for transmission is preferable.**

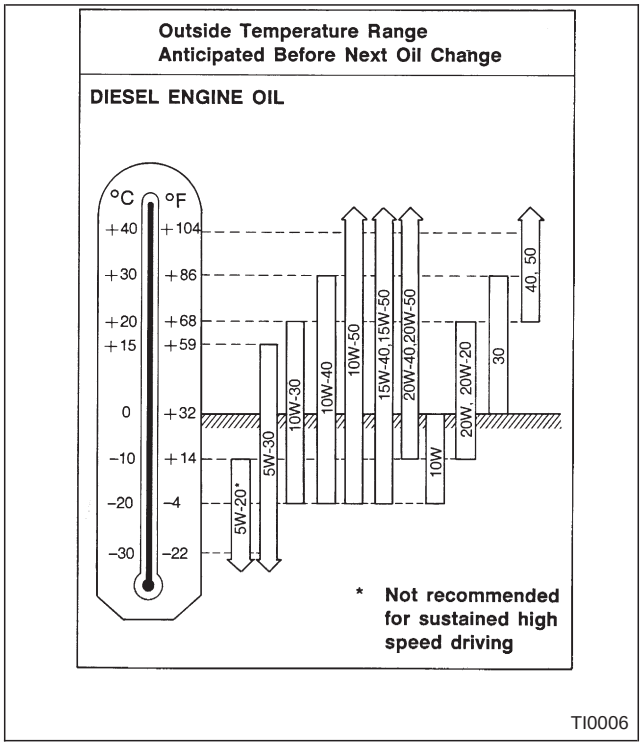

- **For cold areas: 10W-30 is preferable.**
- **For hot and warm areas: 20W-40 and 20W-50 are suitable.**

Anti-freeze Coolant Mixture Ratio

The engine cooling system is filled at the factory with a high-quality, year-round, anti-freeze coolant solution. The anti-freeze solution contains rust and corrosion inhibitors. Therefore, additional cooling system additives are not necessary.

CAUTION:

When adding or replacing coolant, be sure to use only an ethylene glycol anti-freeze with the proper mixture ratio. See the following examples:

Outside temperature down to		Anti-freeze	Soft water
°C	°F		
−15	5	30%	70%
−35	−30	50%	50%

The use of other types of coolant solutions may damage your cooling system.

Checking Drive Belts

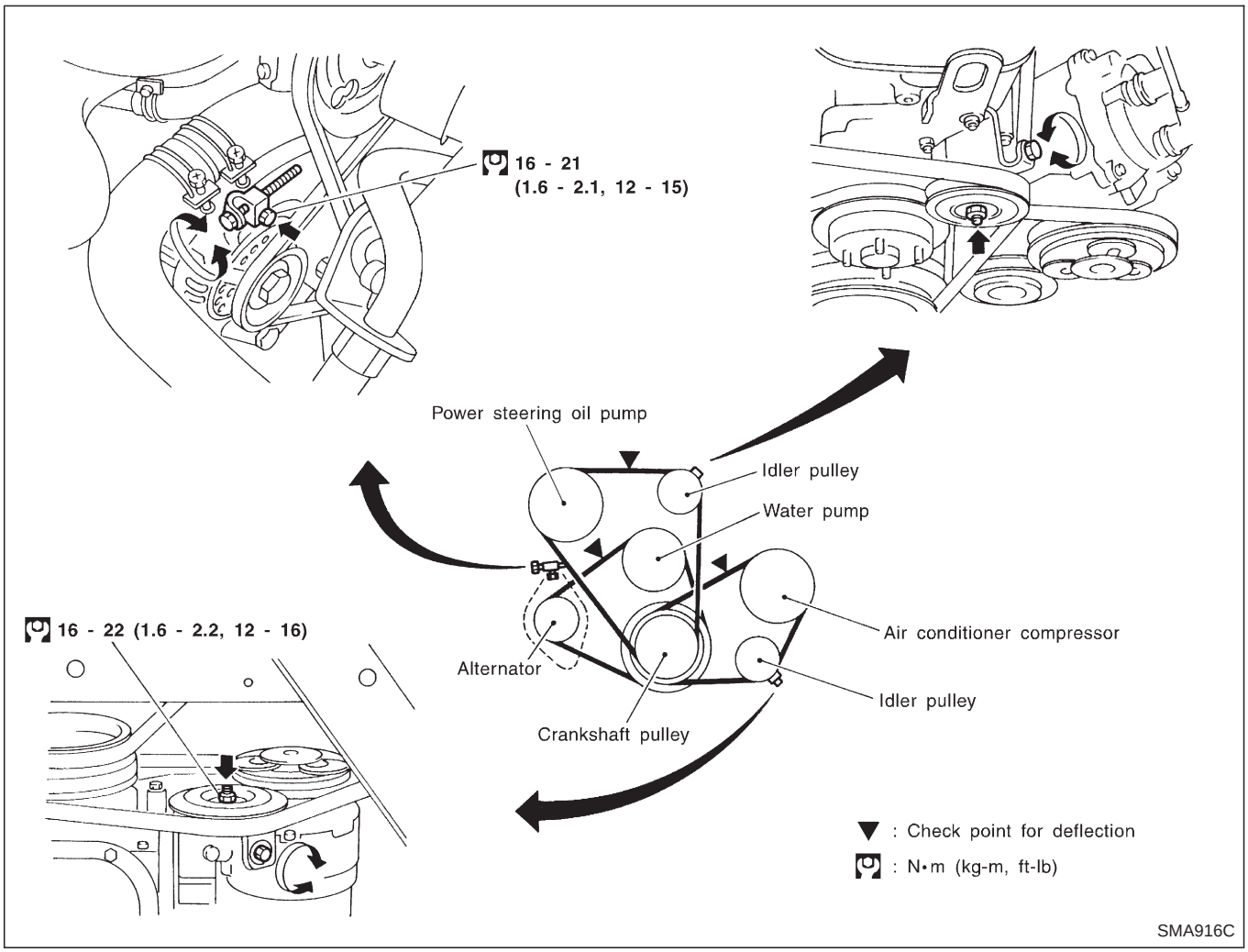

1. Inspect for cracks, fraying, wear or oil. If necessary, replace with a new one.
2. Inspect drive belt deflections by pushing midway between pulleys.

Adjust if belt deflections exceed the limit.
Belt deflection:

Unit: mm (in)

	Used belt deflection		Deflection of new belt
	Limit	Deflection after adjustment	
Alternator	17 (0.67)	10 - 12 (0.39 - 0.47)	8 - 10 (0.31 - 0.39)
Air conditioner compressor	16 (0.63)	10 - 12 (0.39 - 0.47)	8 - 10 (0.31 - 0.39)
Power steering oil pump	15 (0.59)	9 - 11 (0.35 - 0.43)	7 - 9 (0.28 - 0.35)
Applied pushing force	98 N (10 kg, 22 lb)		

Inspect drive belt deflections when engine is cold.

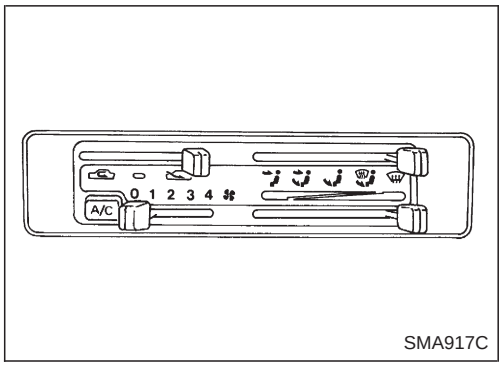

SMA917C

Changing Engine Coolant

WARNING:
To avoid being scalded, never change the coolant when the engine is hot.

— DRAINING ENGINE COOLANT —

1. Move heater ‘‘TEMP’’ control lever all the way to ‘‘HOT’’ position.

- **Make sure that air condition switch is ‘‘OFF’’.**

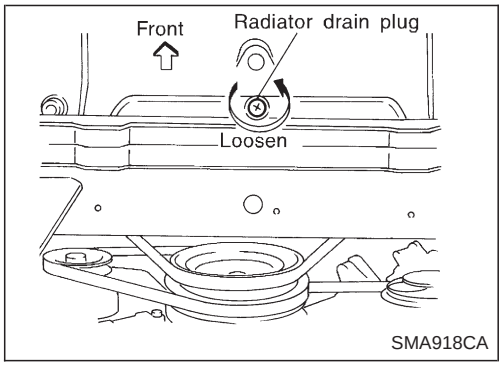

SMA918CA

2. Open radiator drain plug at the bottom of radiator, and remove radiator cap.
3. Remove reservoir tank, drain coolant, then clean reservoir tank. Install it temporarily.

Be careful not to allow coolant to contact drive belts.

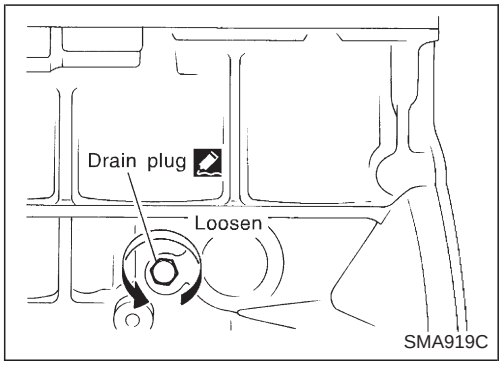

SMA919C

4. Remove cylinder block drain plug.

— FLUSHING COOLING SYSTEM —

5. Install and then tighten radiator drain plug and cylinder block drain plug securely.
6. Open air relief plug.
7. Fill radiator with water and close air relief plug and radiator cap.
8. Run engine and warm it up sufficiently.
9. Race engine 2 or 3 times under no-load.
10. Stop engine and wait until it cools down.
11. Repeat step 2 through step 10 until clear water begins to drain from radiator.
12. Drain water.

— REFILLING ENGINE COOLANT —

- **Apply sealant to the thread of drain plug.**
  : 34 - 44 N·m
  (3.5 - 4.5 kg-m, 25 - 33 ft-lb)

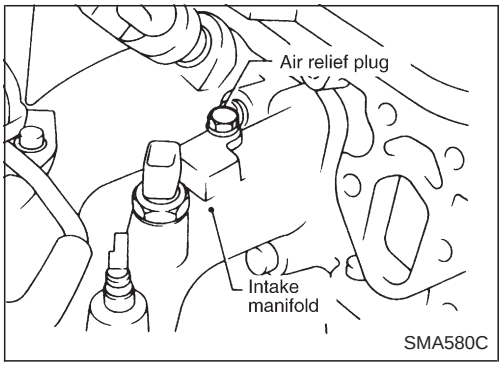

SMA580C

Changing Engine Coolant (Cont'd)

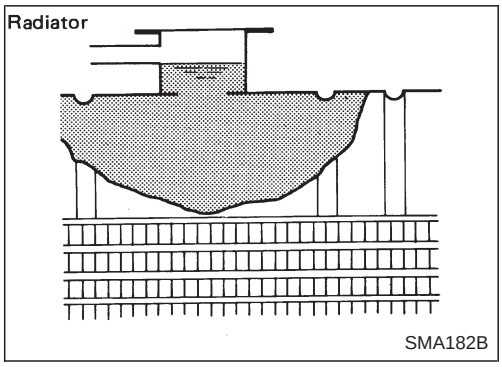

SMA182B

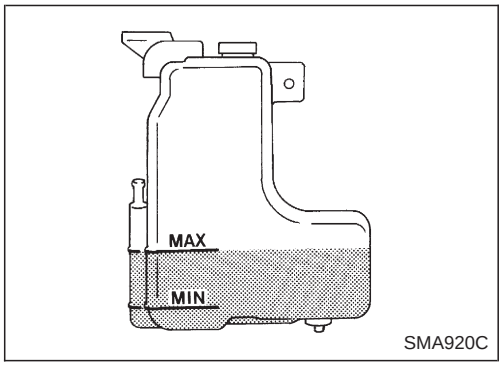

SMA920C

13. Open radiator cap and air relief plug.
14. Fill radiator with coolant up to specified level.
    Follow instructions attached to anti-freeze container for mixing ratio of anti-freeze to water.

For coolant mixture ratio, refer to MA-14.

Unit: ℓ (Imp qt)

	Coolant capacity:	
	2WD	4WD
Without reservoir tank	6.1 (5-3/8)	
Reservoir tank	0.6 (1/2)	

Pour coolant through coolant filler neck slowly to allow air in system to escape.

15. Close air relief plug.
16. Remove reservoir tank, drain coolant, then clean reservoir tank.
17. Install reservoir tank and fill it with coolant up to ''MAX'' level and then install radiator cap.
18. Run engine and warm it up sufficiently.
19. Race engine 2 or 3 times under no-load.
20. Stop engine and cool it down, then add coolant as necessary.

Checking Cooling System

CHECKING HOSES

Check hoses for proper attachment, leaks, cracks, damage, loose connections, chafing and deterioration.

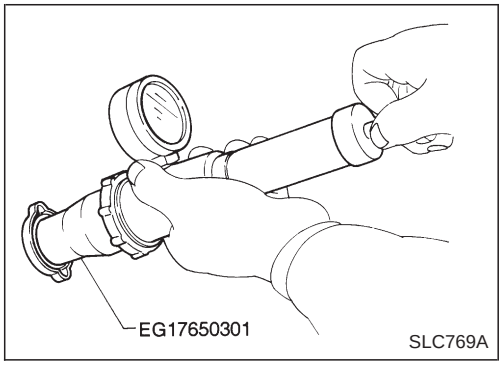

SLC769A

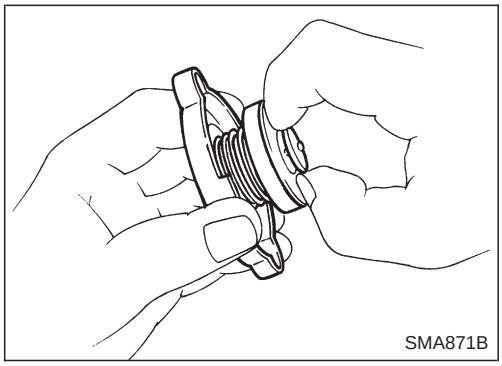
SMA871B

CHECKING RADIATOR CAP

Apply pressure to radiator cap by means of a cap tester to see if it is satisfactory.

Radiator cap relief pressure:
Standard
78 - 98 kPa
(0.78 - 0.98 bar, 0.8 - 1.0 kg/cm^2, 11 - 14 psi)
Limit
59 - 98 kPa
(0.59 - 0.98 bar, 0.6 - 1.0 kg/cm^2, 9 - 14 psi)

Pull the negative-pressure valve to open it. Check that it closes completely when released.

Checking Cooling System (Cont'd)

CHECKING COOLING SYSTEM FOR LEAKS

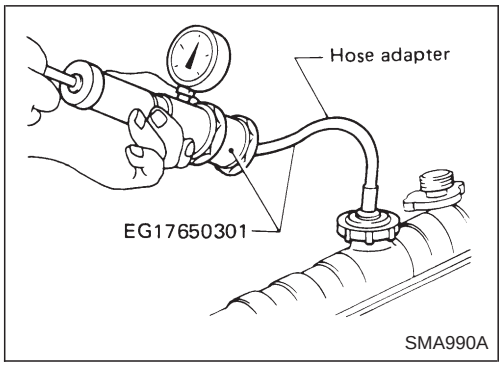

Apply pressure to the cooling system with cap tester to check for leakage.

Testing pressure:
157 kPa (1.57 bar, 1.6 kg/cm^2, 23 psi)

CAUTION:
Higher pressure than the specified value may cause damage to the radiator.

Checking Fuel Lines

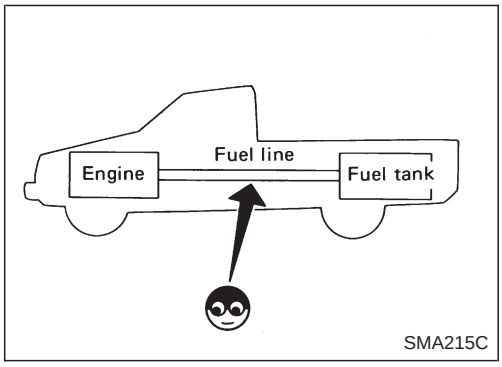

Inspect fuel lines and tank for improper attachment and for leaks, cracks, damage, loose connections, chafing and deterioration. If necessary, repair or replace malfunctioning parts.

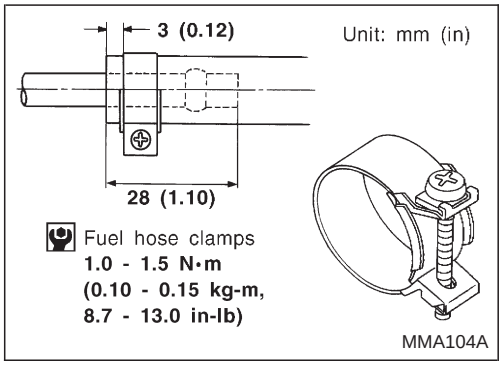

CAUTION:
Tighten high-pressure rubber hose clamp so that clamp end is 3 mm (0.12 in) from hose end.
Tightening torque specifications are the same for all rubber hose clamps.
Ensure that screw does not contact adjacent parts.

Changing Fuel Filter

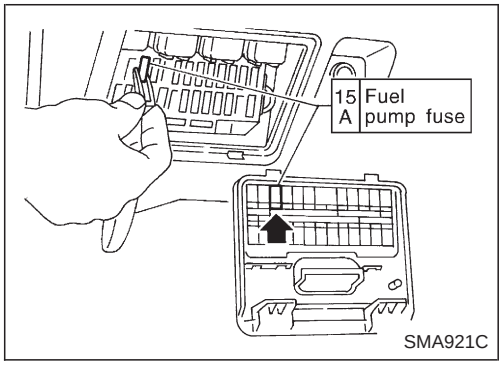

WARNING:
Before removing fuel filter, release fuel pressure from fuel line.

1. Remove fuse for fuel pump.
2. Start engine.
3. After engine stalls, crank engine two or three times to make sure that fuel pressure is released.
4. Turn ignition switch OFF and install fuse for fuel pump.

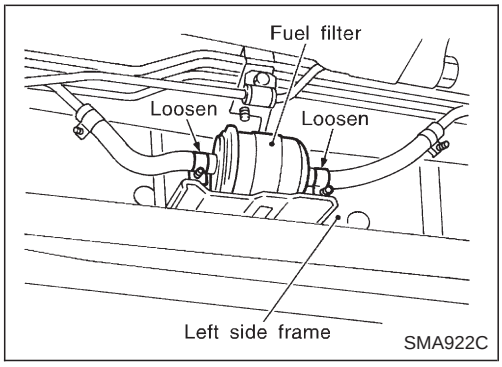

5. Loosen fuel hose clamps.
6. Replace fuel filter.

- **Be careful not to spill fuel or engine compartment. Place a shop towel to absorb fuel.**
- **Use a high-pressure type fuel filter. Do not use a synthetic resinous fuel filter.**
- **When tightening fuel hose clamps, refer to ''Checking Fuel Lines'', MA-18.**

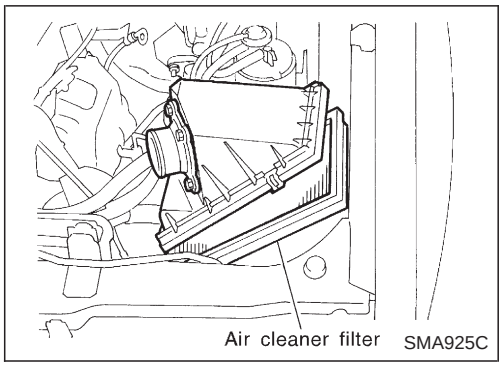

Changing Air Cleaner Filter (Viscous paper type)

The viscous paper type filter does not need cleaning between renewals.

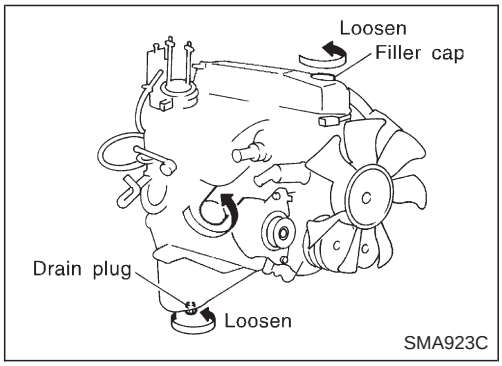

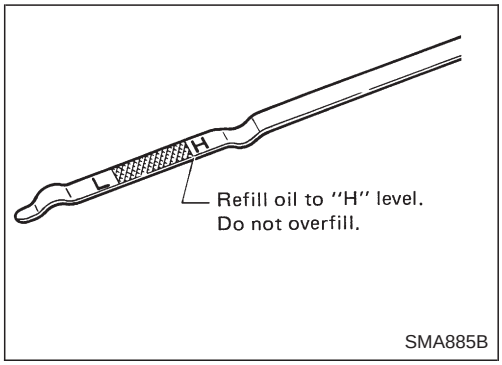

Changing Engine Oil

WARNING:

- **Be careful not to burn yourself, as the engine oil is hot.**
- **Prolonged and repeated contact with used engine oil may cause skin cancer; try to avoid direct skin contact with used oil. If skin contact is made, wash thoroughly with soap or hand cleaner as soon as possible.**

1. Warm up engine, and check for oil leakage from engine components.
2. Remove drain plug and oil filler cap.
3. Drain oil and refill with new engine oil.

Oil grade: API, SG or SH
Viscosity: See ''RECOMMENDED FLUIDS AND LUBRICANTS'', MA-13.
Refill oil capacity (Approximately):

Unit: ℓ (Imp qt)

	2WD	4WD
With oil filter change	3.9 (3-3/8)	4.1 (3-5/8)
Without oil filter change	3.5 (3-1/8)	3.7 (3-1/4)

CAUTION:

- **Be sure to clean drain plug and install with new washer.**
  Drain plug:
  : 29 - 39 N·m (3.0 - 4.0 kg-m, 22 - 29 ft-lb)
- **Use recommended engine oil.**
- **The refill capacity changes depending on the oil temperature and drain time, use these values as a reference and be certain to check with the dipstick when changing the oil.**

4. Check oil level.
5. Start engine and check area around drain plug and oil filter for oil leakage.
6. Run engine for a few minutes, then turn it off. After several minutes, check oil level.

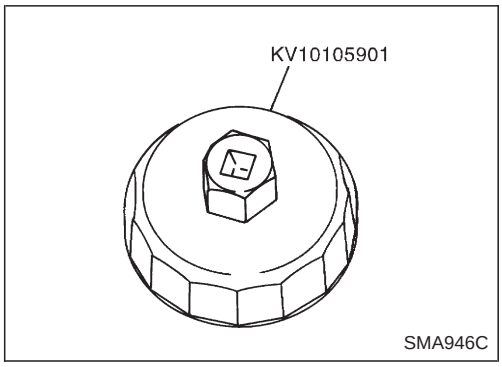

Changing Oil Filter

1. Remove oil filter with a suitable tool.

WARNING:
Be careful not to burn yourself, as the engine and the engine oil are hot.

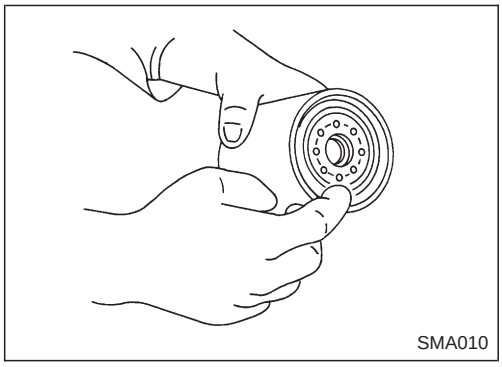

2. Before installing a new oil filter, clean the oil filter mounting surface on cylinder block, and coat the rubber seal of oil filter with a little engine oil.

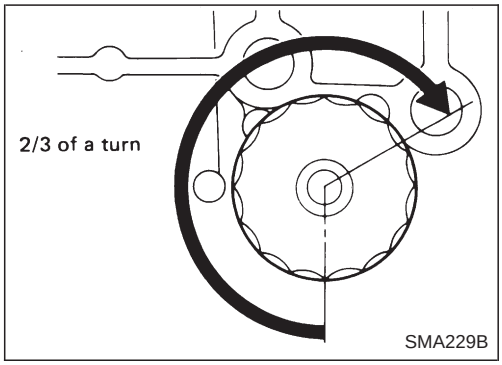

3. Screw in the oil filter until a slight resistance is felt, then tighten additionally more than 2/3 turn.
4. Add engine oil.

Refer to ‘‘Changing Engine Oil’’, MA-19.

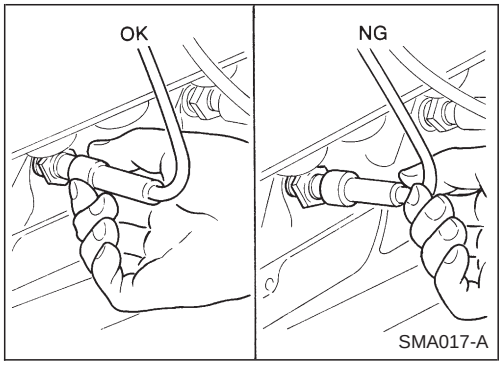

Checking and Changing Spark Plugs

1. Disconnect ignition wires from spark plugs at boot.
   Do not pull on the wire.

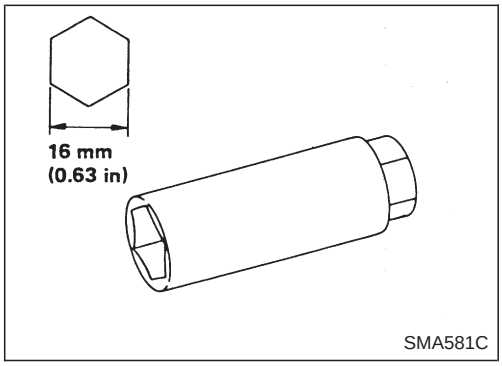

2. Remove spark plugs with spark plug wrench.
3. Clean plugs in sand blast cleaner.
4. Check insulator for cracks or chips, gasket for damage or deterioration and electrode for wear and burning. If they are excessively worn away, replace with new spark plugs.

Spark plug:

Make	NGK
Standard type	ZFR5E-11
Hot type	ZFR4E-11
Cold type	ZFR6E-11

Checking and Changing Spark Plugs (Cont'd)

Use standard type spark plug for normal condition.

The hot type spark plug is suitable when fouling occurs with the standard type spark plug under conditions such as:

- frequent engine starts
- low ambient temperatures

The cold type spark plug is suitable when spark knock occurs with the standard type spark plug under conditions such as:

- extended highway driving
- frequent high engine revolution

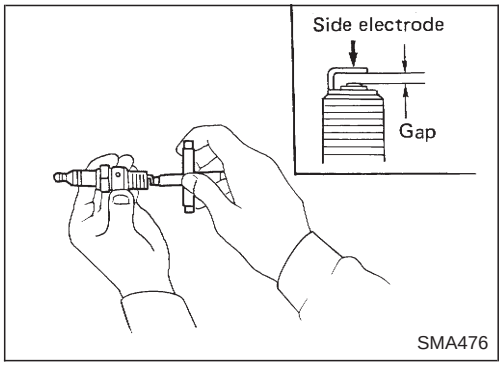

SMA476

5. Check spark plug gap.
   Gap: 1.0 - 1.1 mm (0.039 - 0.043 in)
6. Install spark plugs. Reconnect ignition wires according to numbers indicated on them.
   Spark plug:
   : 20 - 29 N·m
   (2.0 - 3.0 kg-m, 14 - 22 ft-lb)

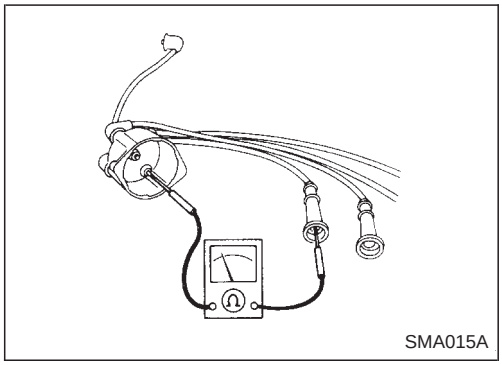
SMA015A

Checking Ignition Wires

1. Check the high tension wires for cracks, damage, burned terminals and for proper fit.
2. Measure the resistance of the high tension wires, by shaking them and checking for intermittent breaks.
   Resistance: Less than 12.2 kΩ/m (3.72 kΩ/ft)

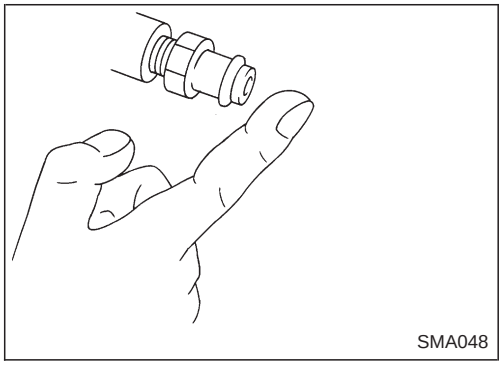
SMA048

Checking Positive Crankcase Ventilation (PCV) System

CHECKING PCV VALVE

With engine running at idle, remove ventilation hose from PCV valve; if valve is working properly, a hissing noise will be heard as air passes through it and a strong vacuum should be felt immediately when a finger is placed over valve inlet.

CHECKING VENTILATION HOSES

1. Check hoses and hose connections for leaks.
2. Disconnect all hoses and clean with compressed air. If any hose cannot be freed of obstructions, replace.

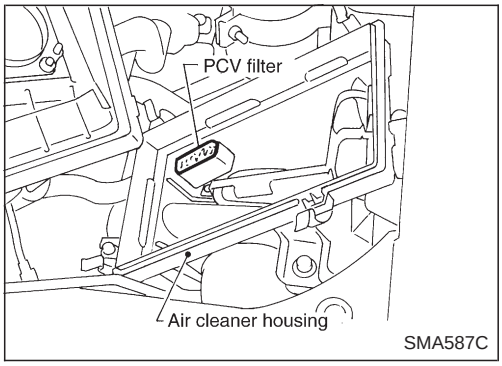

SMA587C

Changing Positive Crankcase Ventilation (PCV) Filter

Remove air cleaner cover and take out PCV filter located inside air cleaner cover. Then install new PCV filter.

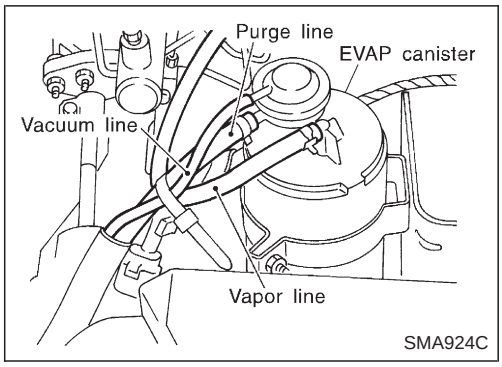

Checking Vacuum Hoses and Connections

Check vacuum hoses for improper attachment and for leaks, cracks, damage, loose connections, chafing and deterioration.

Refer to Vacuum Hose Drawing in ENGINE AND EMISSION CONTROL OVERALL SYSTEM in EC section.

Checking Vapor Lines

1. Visually inspect vapor lines for improper attachment and for cracks, damage, loose connections, chafing and deterioration.
2. Inspect vacuum relief valve of fuel tank filler cap for clogging, sticking, etc.

Refer to EVAPORATIVE EMISSION CONTROL SYSTEM INSPECTION in EC section.

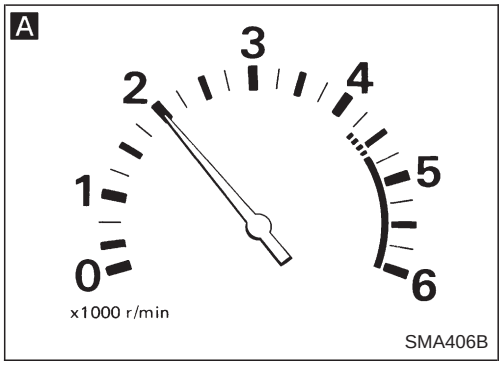

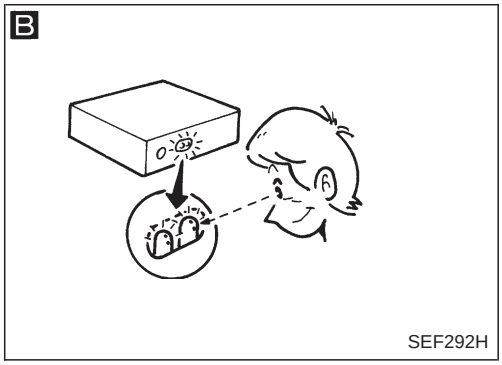

Checking Heated Oxygen Sensor

Checking procedure

INSPECTION START

↓

Start engine and warm it up until engine coolant temperature indicator points to the middle of gauge.

↓

A

Run engine at about 2,000 rpm for about 2 minutes under no-load.

↓

B

*Make sure that inspection lamp (Green LED) on ECM goes on and off more than 5 times during 10 seconds, at 2,000 rpm under no-load.

OK → INSPECTION END

NG → Check and adjustment should be made by referring to IDLE SPEED/IGNITION TIMING/IDLE MIXTURE RATIO INSPECTION in EC section. → Start engine and warm it up until engine coolant temperature indicator points to the middle of gauge.

INSPECTION END

* ● Make sure that diagnostic mode is mode I or mode II.
● Make sure that diagnostic mode selector is turned fully counterclockwise.

Refer to Self-diagnosis in EC section.

Checking Manifold Tightening Torque

Checking should be performed while engine is cold [approximately 20°C (68°F)].

Manifold bolts and nuts:

Intake

: 13 - 19 N·m (1.3 - 1.9 kg-m, 9 - 14 ft-lb)

Exhaust

: 25 - 29 N·m (2.5 - 3.0 kg-m, 18 - 22 ft-lb)

Exhaust tube nuts:

: 41.2 - 48.0 N·m (4.2 - 4.9 kg-m, 30 - 35 ft-lb)

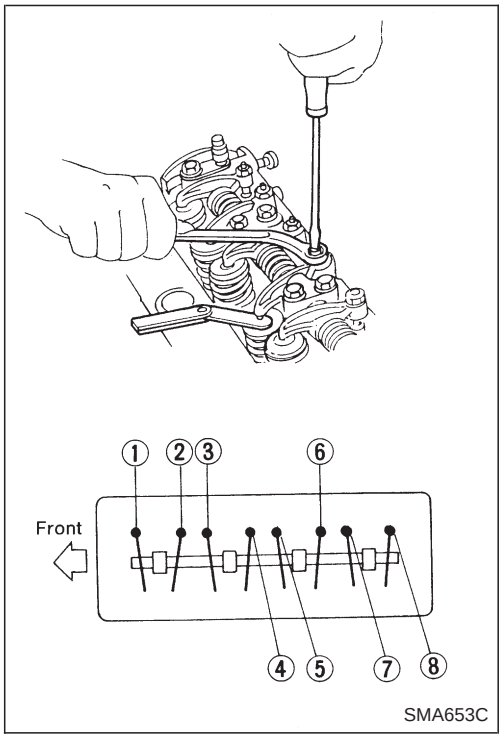

Adjusting Intake and Exhaust Valve Clearance

Adjustment should be made while engine is warm but not running.

1. Set No. 1 cylinder in top dead center on its compression stroke, and adjust valve clearance ①, ②, ③ and ⑥.
2. Set No. 4 cylinder at top dead center on its compression stroke, and adjust valve clearance ④, ⑤, ⑦ and ⑧.

Valve clearance:

Intake ①, ③, ⑤ and ⑦

0.30 - 0.40 mm (0.012 - 0.016 in)

Exhaust ②, ④, ⑥ and ⑧

0.30 - 0.40 mm (0.012 - 0.016 in)

Adjusting screw lock nuts:

: 15 - 20 N·m (1.5 - 2.0 kg-m, 11 - 14 ft-lb)

- Tighten lock nuts, by fixing the adjusting screws using a minus driver.

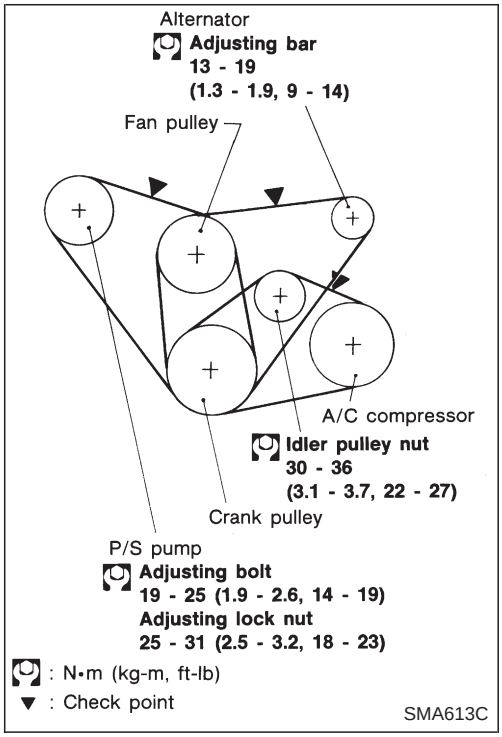

Checking Drive Belt

1. Inspect for cracks, fraying, wear or oil adhesion. Replace if necessary.

The belts should not touch the bottom of the pulley groove.

2. Check drive belt deflection by pushing on the belt midway between pulleys.

Adjust if belt deflections exceed the limit.

Unit: mm (in)

	Used belt deflection		Deflection of new belt
	Limit	Deflection after adjustment	
Alternator	20 (0.79)	11 - 13 (0.43 - 0.51)	9 - 11 (0.35 - 0.43)
Air conditioner compressor	12 (0.47)	6 - 7.5 (0.236 - 0.295)	5 - 6.5 (0.197 - 0.256)
Power steering oil pump	15 (0.59)	8 - 9.5 (0.315 - 0.374)	7 - 8.5 (0.276 - 0.335)
Applied pushing force	98 N (10 kg, 22 lb)		

Check drive belt deflections when engine is cold.

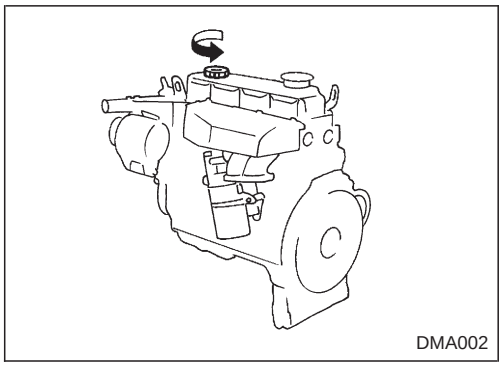

Changing Engine Oil

WARNING:

- **Be careful not to burn yourself, as engine oil is hot.**
- **Prolonged and repeated contact with used engine oil may cause skin cancer; try to avoid direct skin contact with used oil. If skin contact is made, wash thoroughly with soap or hand cleaner as soon as possible.**

1. Warm up engine, and check for oil leakage from engine components.
2. Remove oil filler cap and drain plug.
3. Drain oil and fill with new engine oil.

Oil grade: API CC or CD except Europe
API, CD for Europe

Viscosity:
See "RECOMMENDED FLUIDS AND LUBRICANTS", MA-13.

Refill oil capacity (approximate):
Without oil filter change
TD25 6.5 ℓ (5-3/4 Imp qt)
With oil filter change
TD25 7.2 ℓ (6-3/8 Imp qt)

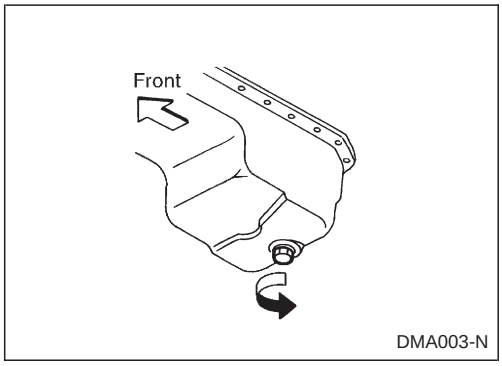

CAUTION:

- **Be sure to clean and install oil pan drain plug with washer.**
  Drain plug:
  : 54 - 59 N·m (5.5 - 6.0 kg-m, 40 - 43 ft-lb)
- **The refill capacity changes depending on the oil temperature and drain time; use these valves as a reference and be certain to check with the dipstick when changing the oil.**

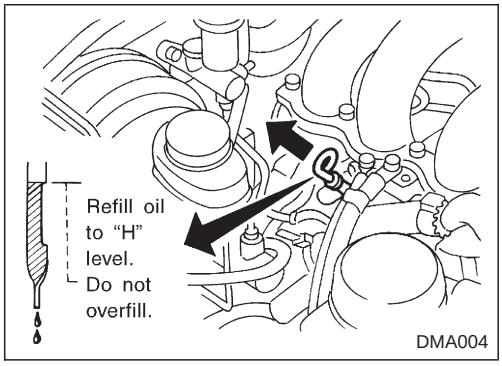

4. Check oil level.
5. Start engine. Check area around drain plug and oil filter for any sign of oil leakage.
6. Run engine for a few minutes, then turn it off. After several minutes check oil level.

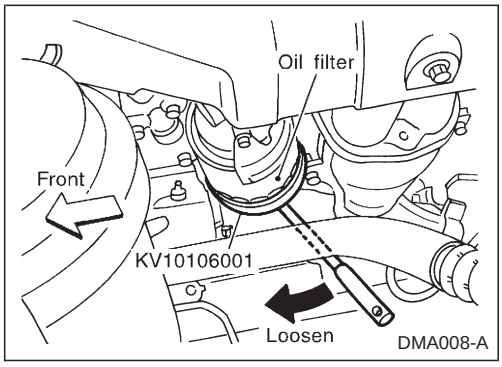

Changing Engine Oil Filter

1. Remove oil filter with Tool.

WARNING:
Be careful not to burn yourself, as the engine and engine oil are hot.

Changing Engine Oil Filter (Cont'd)

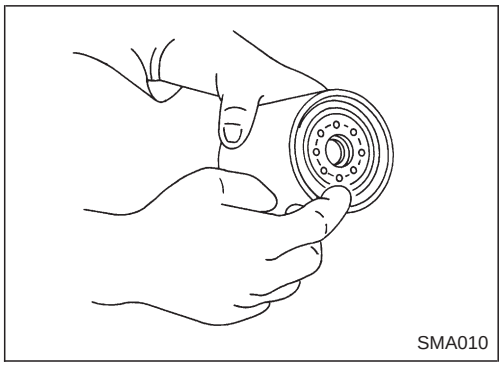
SMA010

2. Clean oil filter mounting surface on cylinder block. Coat rubber seal of new oil filter with engine oil.
3. Screw in the oil filter until a slight resistance is felt, then tighten an additional 2/3 of a turn.
4. Add engine oil.

Refer to Changing Engine Oil.

- **Clean excess oil from engine.**

Changing Engine Coolant

WARNING:
To avoid the danger of being scalded, never change the coolant when the engine is hot.

—DRAINING ENGINE COOLANT—

1. Move heater TEMP control knob all the way to HOT.
2. Open radiator drain plug at the bottom of radiator.

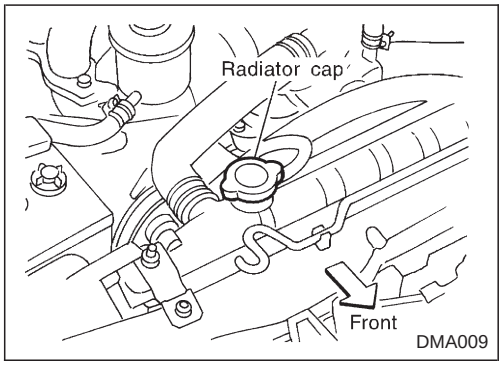

DMA009

3. Remove radiator filler cap.
   Remove reservoir tank, drain coolant, then clean reservoir tank.
   Install it temporarily.

- **Be careful not to allow coolant to contact drive belts.**

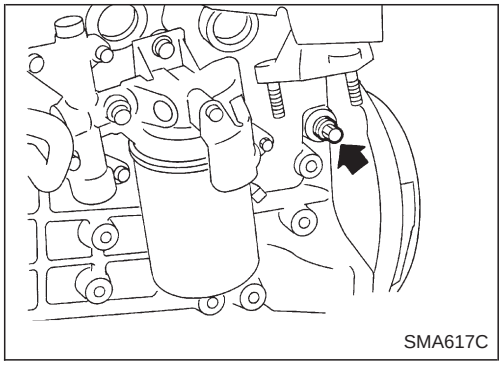
SMA617C

4. Remove cylinder block drain plug located at left rear of cylinder block.
5. Drain coolant and install cylinder block drain plug and radiator drain plug.
6. Fill radiator with water and warm up engine.
7. Stop engine and wait until it cools down.
8. Repeat step 2 through step 7 two or three times.
9. Drain water.

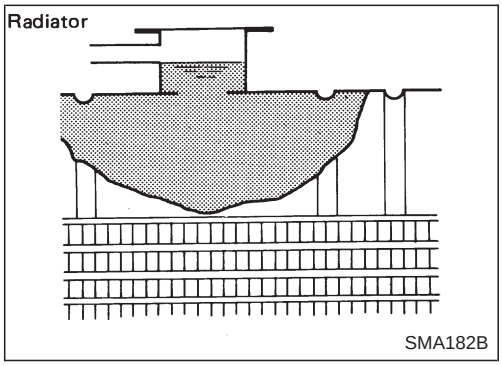

SMA182B

—REFILLING ENGINE COOLANT—

10. Install reservoir tank, radiator drain plug, and cylinder block drain plugs.

- **Apply sealant to the thread of cylinder block drain plug.**
  Cylinder block drain plug:
  : 54 - 64 N·m (5.5 - 6.5 kg-m, 40 - 47 ft-lb)

11. Fill radiator and reservoir tank with coolant up to the MAX level and install radiator cap.

For coolant mixture ratio, refer to MA-14.

Changing Engine Coolant (Cont'd)

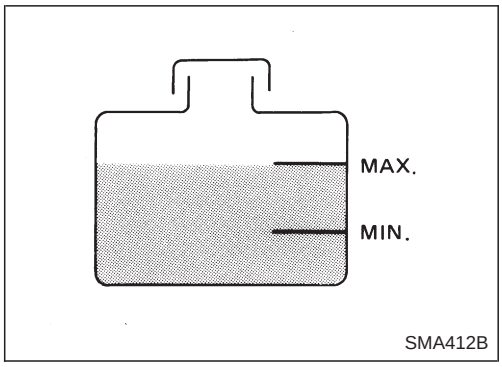

Coolant capacity (With reservoir tank):
TD25 9.5 ℓ (8-3/8 Imp qt)
Reservoir tank capacity (for MAX level):
0.6 ℓ (1/2 Imp qt)

Pour coolant through coolant filler neck slowly to allow air in system to escape.

12. Warm up engine to normal operating temperature.
13. Run engine at 2,000 rpm for 10 seconds and return to idle speed.
- Repeat 2 or 3 times.

Watch coolant temperature gauge so as not to overheat the engine.

14. Stop engine and cool it down.
- Cool down using a fan to reduce the time.
15. Remove the radiator filler cap and check coolant level.
- If necessary, refill radiator up to filler neck with coolant.
16. Refill reservoir tank to Max line with coolant.
17. Repeat step 12 through step 16 two or more times.
18. Warm up engine, and check for sound of coolant flow while running engine from idle up to 2,000 rpm with heater temperature control set at several positions between COOL and HOT.
- Sound may be noticeable at heater water cock.
19. If sound is heard, bleed air from cooling system by repeating steps 12 through 16 until coolant level no longer drops.
- **Clean excess coolant from engine.**

Checking Cooling System

CHECKING HOSES AND CLAMPS

Check hoses and clamps for proper attachment, leaks, cracks, damage, loose connections, chafing and deterioration.

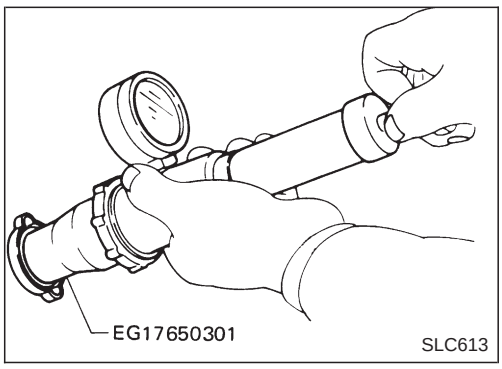

CHECKING RADIATOR CAP

Apply pressure to radiator cap with cap tester to see if it is satisfactory.

Radiator cap relief pressure:
78 - 98 kPa
(0.78 - 0.98 bar, 0.8 - 1.0 kg/cm^2, 11 - 14 psi)

Checking Cooling System (Cont'd)

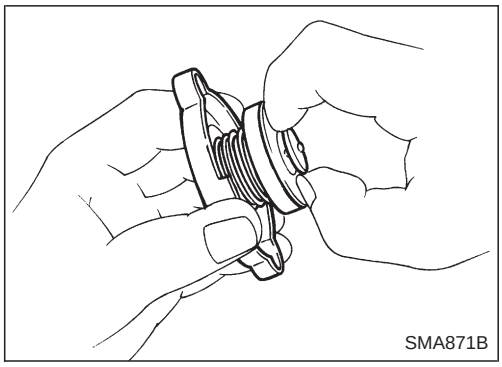

Pull the negative-pressure valve to open it. Check that it closes completely when released.

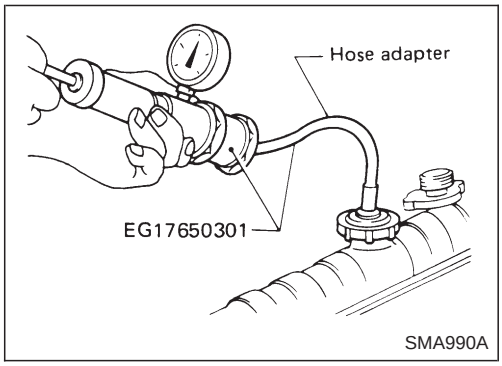

CHECKING COOLING SYSTEM FOR LEAKS

Apply pressure to the cooling system with cap tester to check for leakage.

Testing pressure:

157 kPa (1.57 bar, 1.6 kg/cm^2, 23 psi)

CAUTION:

Use of higher pressure than the specified value may cause damage to radiator.

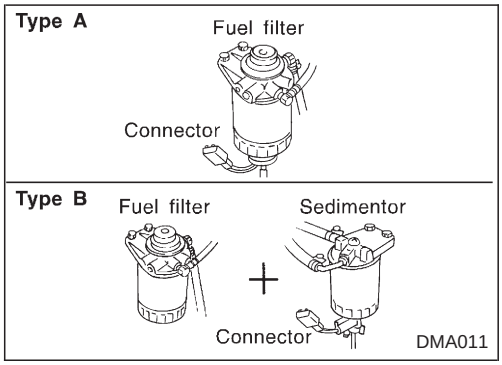

Checking and Replacing Fuel Filter and Draining Water

Be careful not to spill fuel in engine compartment. Place a rag to absorb fuel.

CHECKING FUEL FILTER

Check fuel filter for fuel leakage, damage and other abnormal signs.

REPLACING FUEL FILTER

1. Disconnect harness connector and drain fuel.

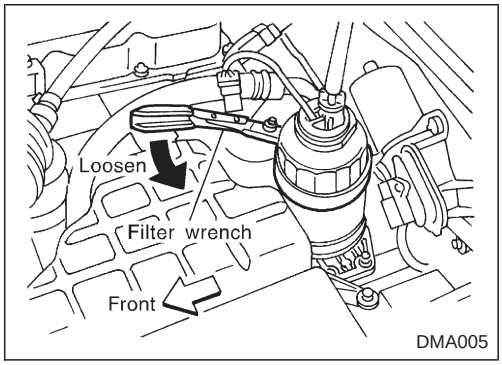

2. Remove 2 bolts fixing fuel filter bracket, and remove the bracket with fuel filter. Do not remove fuel hose.
3. Install fuel filter upside down using the holes for the bolts to fix the fuel filter bracket.
4. Remove fuel filter using band-type filter wrench.
   Type A
   Remove fuel filter and fuel filter sensor.
   Type B
   Loosen fuel filter within the extent fuel does not spill, return fuel filter back to the normal position, then remove it.

CAUTION:

Remove fuel filter without spilling fuel. If spilt, wipe off immediately. Be specially careful not to spill fuel on engine mount insulator.

Checking and Replacing Fuel Filter and Draining Water (Cont'd)

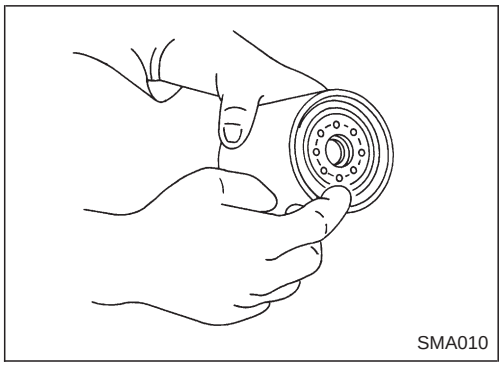
SMA010

5. Wipe clean fuel filter mounting surface on fuel filter bracket and smear a little fuel on rubber seal of fuel filter.
6. Screw fuel filter on until a slight resistance is felt, then tighten an additional more than 2/3 of a turn.
7. Install fuel filter sensor to new fuel filter. (Type A)
8. Bleed air from fuel line.

Refer to Bleeding Fuel System in EC section.

9. Start engine and check for leaks.

DRAINING WATER

1. Drain water as follows.

Type A

Loosen drain cock and drain water.

Loosening drain cock 4 to 5 turns causes water to start draining. Do not remove drain cock by loosening it excessively.

If water does not drain properly, move the priming pump up and down.

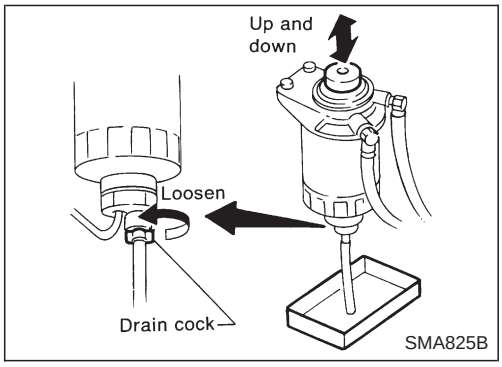

SMA825B

Type B

Loosen air bleeder screw from the sedimentor cover and then loosen drain cock and drain water.

Loosening drain cock 4 to 5 turns causes water to start draining. Do not remove drain cock by loosening it excessively.

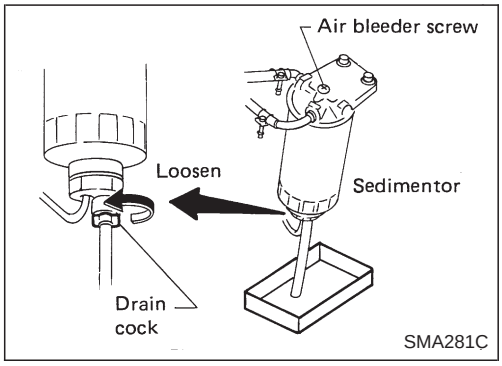

SMA281C

2. Bleed air.

Refer to Bleeding Fuel System in EC section.

Checking Fuel Lines

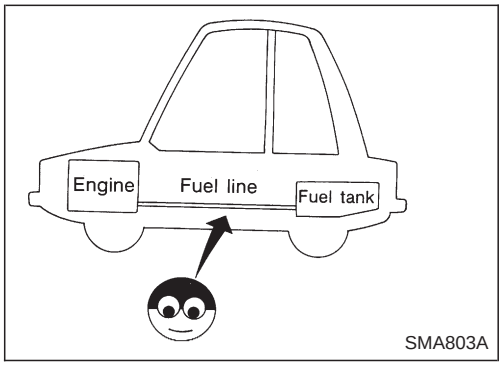

SMA803A

Check fuel lines and tank for proper attachment, leaks, cracks, damage, loose connections, chafing and deterioration.

CAUTION:

Keep clean parts with compressed air when assembling.

Cleaning and Replacing Air Cleaner Filter

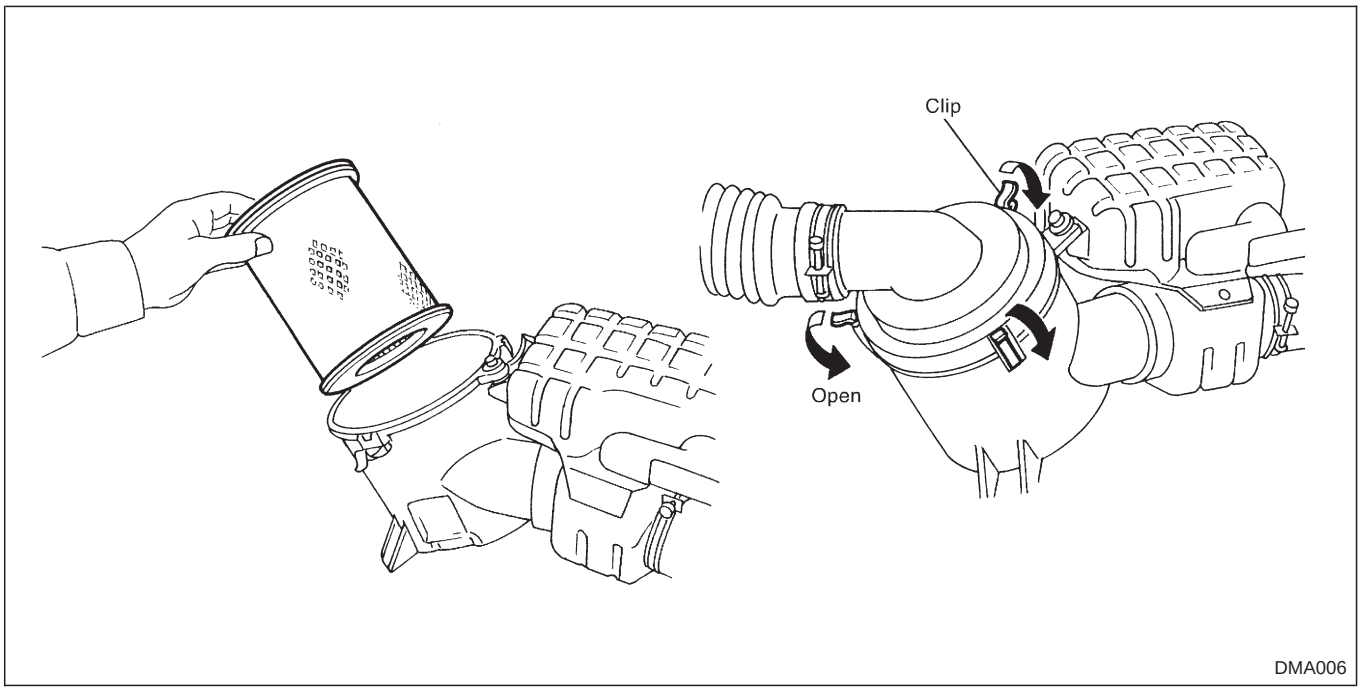

VISCOUS PAPER TYPE

The viscous paper type air cleaner filter does not require any cleaning operation between renewal.

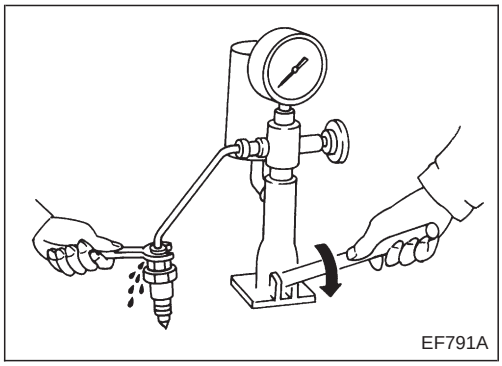

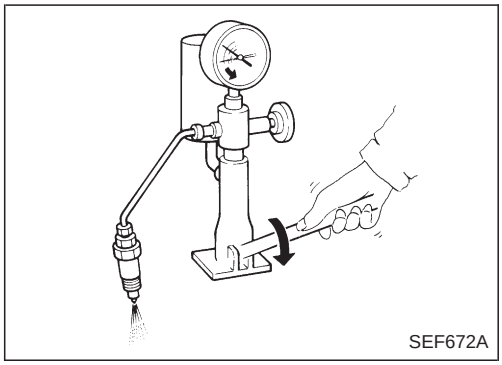

Checking Injection Nozzle

WARNING:
When using nozzle tester, be careful not to allow diesel fuel sprayed from nozzle to come into contact with your hand or body, and make sure that your eyes are properly protected.

1. Install nozzle to injection nozzle tester and bleed air from flare nut.
2. Check initial injection pressure by pumping tester handle one full stroke per second.
   Initial injection pressure:
   Used nozzle
   9,807 - 10,297 kPa
   (98.1 - 103.0 bar, 100 - 105 kg/cm^2,
   1,422 - 1,493 psi)
   New nozzle
   10,297 - 11,278 kPa
   (103.0 - 112.8 bar, 105 - 115 kg/cm^2,
   1,493 - 1,635 psi)

- **Always check initial injection pressure before installing new nozzle.**

Checking Injection Nozzle (Cont'd)

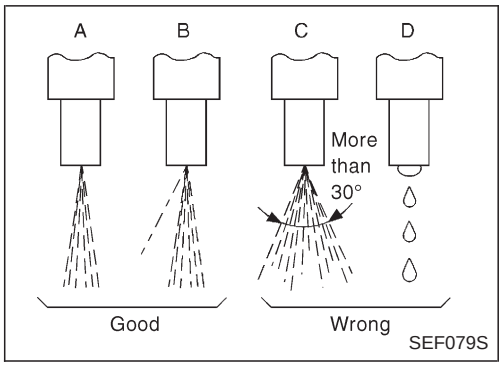

3. Check spray pattern by pumping tester handle one full stroke per second.

a. If main spray angle is within 30 degrees as shown, injection nozzle is good.

b. It is still normal even if a thin stream of spray deviates from main spray (pattern B).

4. If initial injection pressure or injection nozzle is not normal, adjust or clean injection nozzle.
5. Test again. If it is not corrected, replace nozzle.

Refer to EC section for injection pressure adjustment, cleaning and replacement.

6. Install all injection nozzles with Tool and securely connect fuel spill tube and delivery tubes.
7. Bleed air from fuel system and check for fuel leakage with engine running.

Injection nozzle to cylinder head:
: 54 - 64 N·m (5.5 - 6.5 kg-m, 40 - 47 ft-lb)
Spill tube nut:
: 29 - 39 N·m (3.0 - 4.0 kg-m, 22 - 29 ft-lb)
Injection tube:
: 20 - 25 N·m (2.0 - 2.5 kg-m, 14 - 18 ft-lb)

Checking Idle Speed

Preparation

1. Make sure that injection timing is correct.
2. Make sure that injection nozzles are in good condition.
3. Make sure that the following parts are in good condition.

- Air cleaner clogging
- Glow system
- Engine oil and coolant levels
- Valve clearance
- Air intake system (Oil filler cap, oil level gauge, etc.)

4. Set shift lever in ''Neutral'' position. Engage parking brake and lock both front and rear wheels with wheel chocks.
5. Turn off air conditioner, lights and accessories.
6. Make sure that idle control knob is fully released and idle adjusting screw contacts accelerator control lever.

Checking Idle Speed (Cont'd)

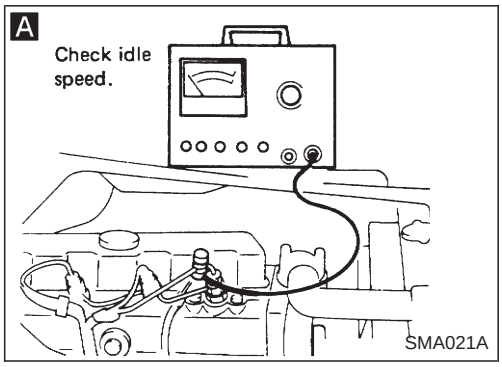

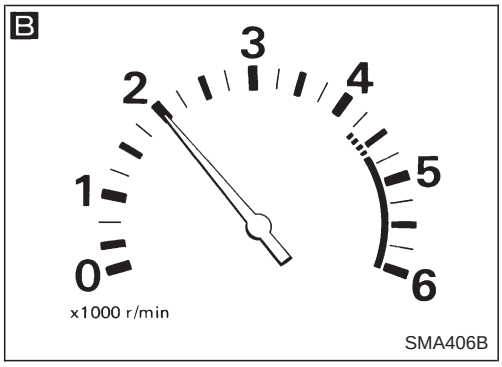

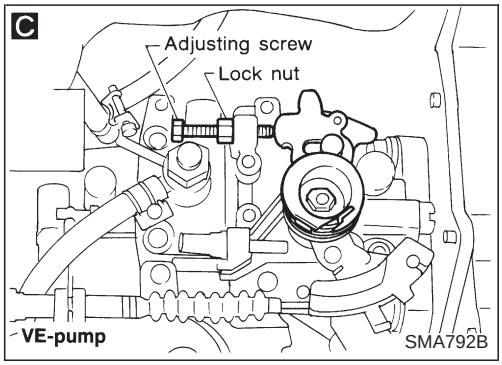

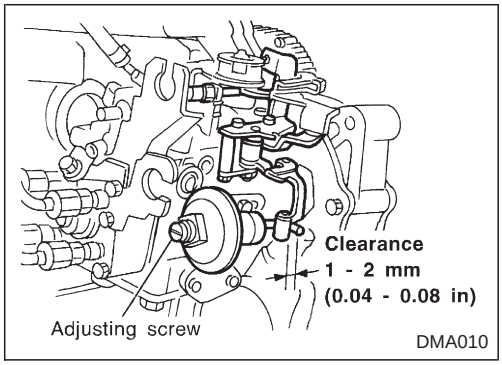

A

- Warm up engine until engine coolant temperature indicator points to middle of gauge.
- Attach tachometer's pick-up to No. 1 fuel injection tube.

In order to take accurate reading of engine rpm, remove clamps that secure No. 1 fuel injection tube.

↓

Start engine.

↓

B

Run engine at about 2,000 rpm for about 2 minutes under no-load.

↓

Run engine for one minute at idle speed.

↓

Check idle speed.

Idle speed:
TD25 700±50 rpm

NG → **C** Adjust idle speed by turning idle speed adjusting screw. → (back to B)

OK ↓

END

- **Rev engine two or three times and allow engine to return to idle speed. If idle speed is not within the specified range, check acceleration linkage for binding and correct it if necessary.**

AIR CONDITIONER EQUIPPED MODEL

1. Make certain that the clearance between the actuator idle control lever pin and the injection pump control lever is within the specified limits.
   Clearance: 1 - 2 mm (0.04 - 0.08 in)
2. Adjust idle speed to specified rpm without the air conditioner operating.
3. Then check the idle speed when the air conditioner is operating and make sure it is correct.

Unit: rpm

Engine	TD25
Idle speed (Air conditioner "ON")	850±50

If not, adjust it by turning FICD actuator stroke adjusting screw.

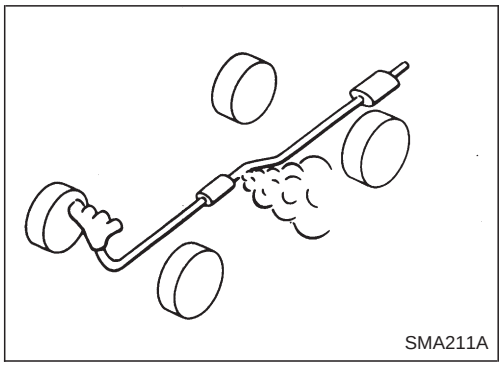
SMA211A

Checking Exhaust System

Check exhaust pipes, muffler and mounting for improper attachment, leaks, cracks, damage, loose connections, chafing or deterioration.

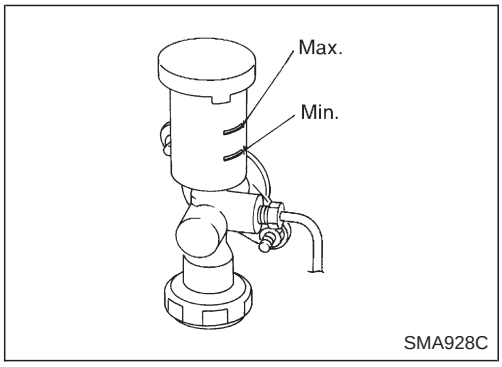

SMA928C

Checking Clutch Fluid Level and Leaks

If fluid level is extremely low, check clutch system for leaks.

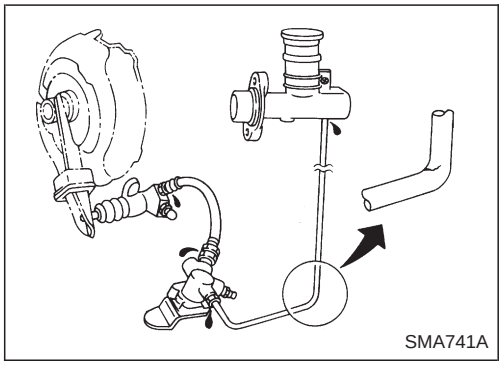
SMA741A

Checking Clutch System

Check fluid lines and operating cylinder for improper connections, cracks, damage, chafing or deterioration.

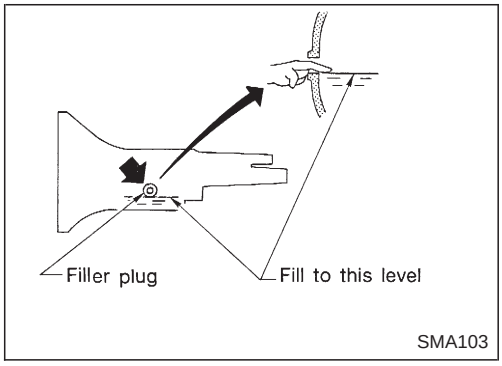

SMA103

Checking M/T Oil

Check for oil leakage and oil level.

Never start engine while checking oil level.

Filler plug:

: 25 - 34 N·m (2.5 - 3.5 kg-m, 18 - 25 ft-lb)

Changing M/T Oil

1. Drain oil from drain plug and refill with new gear oil.
2. Check oil level.

Oil grade and viscosity:

API GL-4. Refer to ‘‘RECOMMENDED FLUIDS AND LUBRICANTS’’, MA-12.

Oil capacity:

FS5W71C

2WD 2.0 ℓ (3-1/2 Imp pt)

4WD 4.9 ℓ (8-5/8 Imp pt)

FS5R30A

4WD 5.1 ℓ (9 Imp pt)

Drain plug:

: 25 - 34 N·m (2.5 - 3.5 kg-m, 18 - 25 ft-lb)

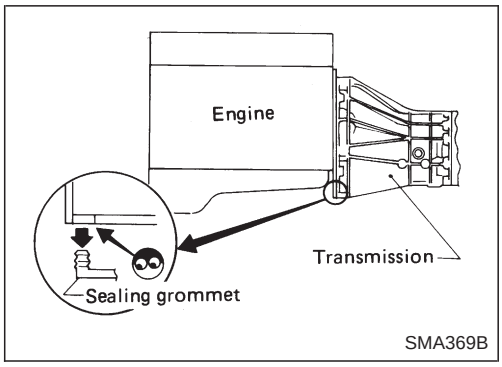

Checking Water Entry — For 4WD models

Check water entry in the clutch housing by removing the sealing grommet whenever driving in deep water or mud.

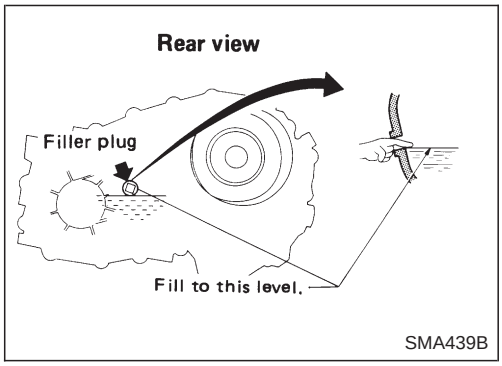

Checking Transfer Fluid

Check for fluid leakage and fluid level.

Automatic Transmission Fluid is used for the transfer in the factory.

Never start engine while checking fluid level.

Filler plug:

: 25 - 34 N·m (2.5 - 3.5 kg-m, 18 - 25 ft-lb)

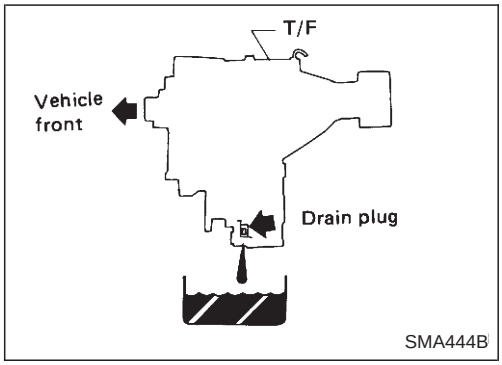

Changing Transfer Fluid

When changing transfer fluid completely, use the following fluid.

Fluid grade:

Nissan Matic "D" or Equivalent Automatic Transmission Fluid or API GL-4. Refer to "RECOMMENDED FLUIDS AND LUBRICANTS", MA-12.

Fluid capacity:

2.2 ℓ (2 Imp qt)

Drain plug:

: 25 - 34 N·m (2.5 - 3.5 kg-m, 18 - 25 ft-lb)

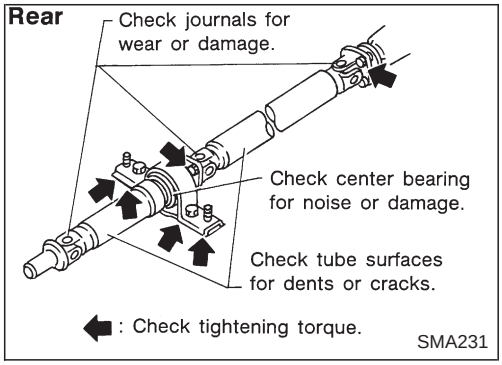

Checking Propeller Shaft

Check propeller shaft for damage, looseness or grease leakage.

Tightening torque: Refer to PD section.

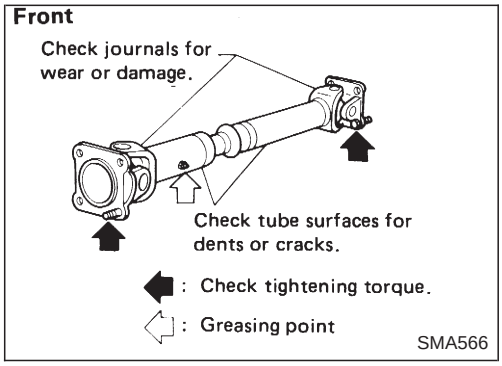

Greasing Propeller Shaft

Apply specified grease to nipples provided on propeller shaft.

Grease specification:

Refer to "RECOMMENDED FLUIDS AND LUBRICANTS", MA-12.

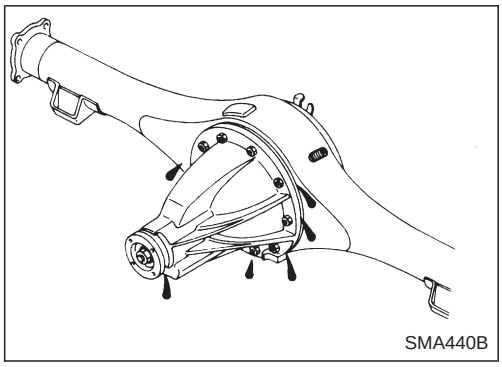

Checking Differential Gear Oil

Check for oil leakage and oil level.

Filler plug:
Front
: 59 - 98 N·m (6 - 10 kg-m, 43 - 72 ft-lb)
Rear
: 59 - 98 N·m (6 - 10 kg-m, 43 - 72 ft-lb)

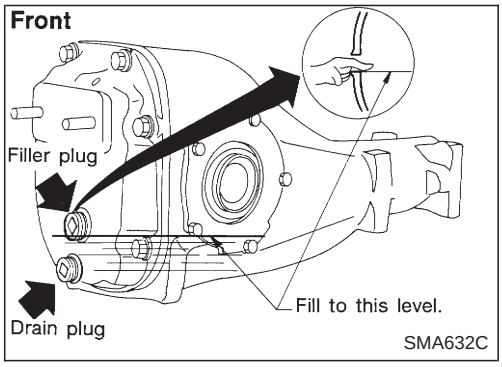

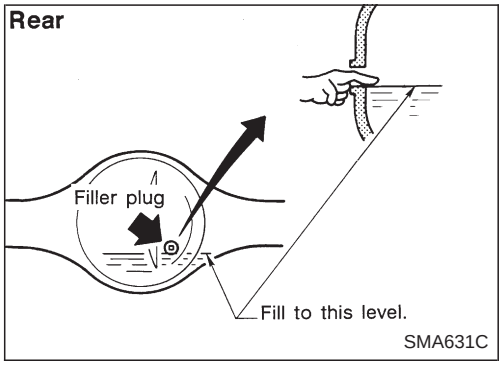

Changing Differential Gear Oil

1. Drain oil from drain plug and refill with new gear oil.
2. Check oil level.

Oil grade and viscosity:
See "RECOMMENDED FLUIDS AND LUBRICANTS", MA-12.
Oil capacity:
Front
1.3 ℓ (2-1/4 Imp pt)
Rear
C200
1.3 ℓ (2-1/4 Imp pt)
H233B
2.8 ℓ (4-7/8 Imp pt)
Drain plug:
Front
: 59 - 98 N·m (6 - 10 kg-m, 43 - 72 ft-lb)
Rear
: 59 - 98 N·m (6 - 10 kg-m, 43 - 72 ft-lb)

Limited-slip differential gear

- Use only approved limited-slip differential gear oil.
- Limited-slip differential identification.

(1) Lift both rear wheels off the ground.
(2) Turn one rear wheel by hand.
(3) If both rear wheels turn in the same direction simultaneously, vehicle is equipped with limited-slip differential.

Balancing Wheels

Adjust wheel balance using the road wheel center.

Wheel balance (Maximum allowable unbalance):
Refer to SDS, MA-42.

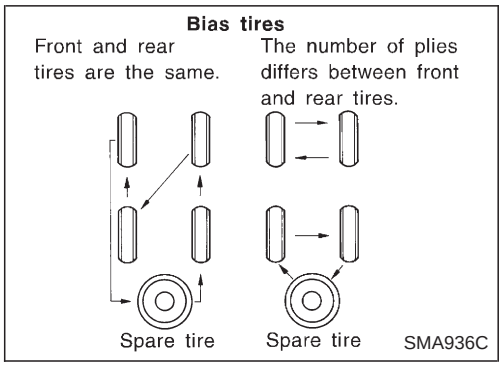

Tire Rotation

- **After rotating the tires, adjust the tire pressure.**
- **Retighten the wheel nuts after the aluminum wheel has been run for the first 1,000 km (600 miles) or if a flat tire occurs.**
  Wheel nuts:
  : 118 - 147 N·m (12 - 15 kg-m, 87 - 108 ft-lb)

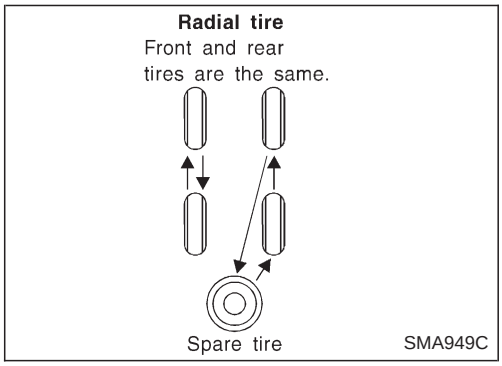

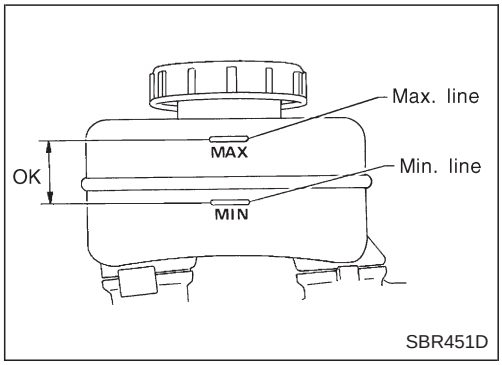

Checking Brake Fluid Level and Leaks

If fluid level is extremely low, check brake system for leaks.

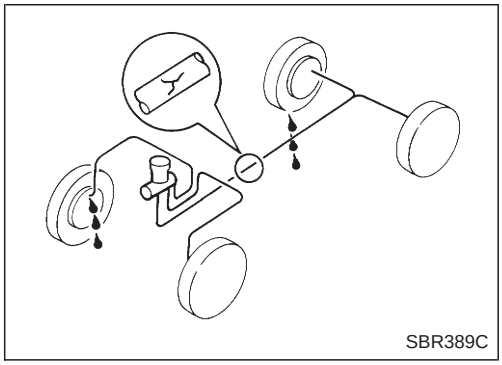

Checking Brake System

Check brake fluid lines and parking brake cables for improper attachment, leaks, chafing, abrasion, deterioration, etc.

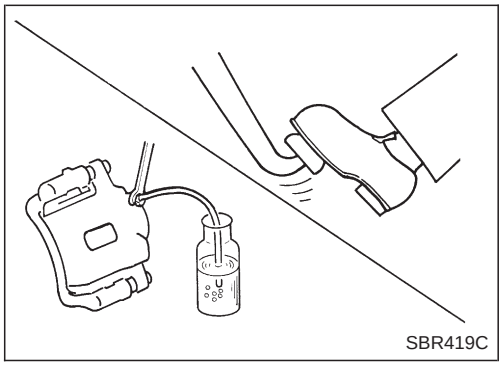

Changing Brake Fluid

1. Drain brake fluid from each air bleeder valve.
2. Refill until new brake fluid comes out from each air bleeder valve. Use same procedure as in bleeding hydraulic system to refill brake fluid. Refer to BR section.

- **Refill with recommended brake fluid (DOT 3 or DOT 4). Refer to ‘‘RECOMMENDED FLUIDS AND LUBRICANTS’’, MA-12.**
- **Never reuse drained brake fluid.**
- **Be careful not to splash brake fluid on painted areas.**

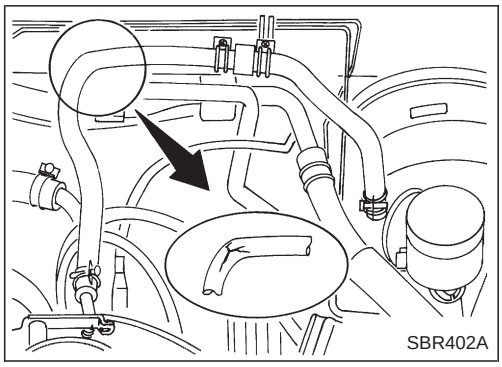
SBR402A

Checking Brake Booster, Vacuum Hoses, Connections and Check Valve

Check vacuum lines, connections and check valve for improper attachment, air tightness, chafing or deterioration.

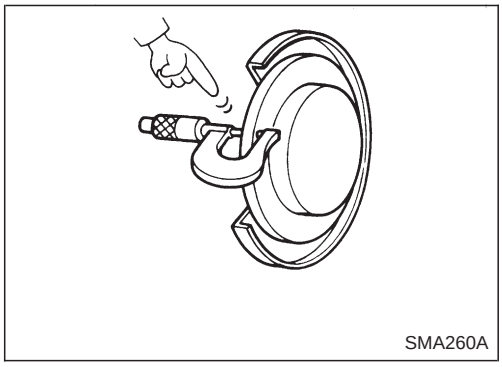
SMA260A

Checking Disc Brake

ROTOR

Check condition and thickness.

Minimum thickness:

CL28VA	**20 mm (0.79 in)**
CL28VD	**24 mm (0.94 in)**

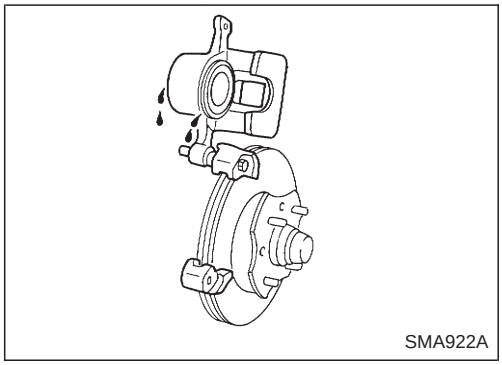
SMA922A

CALIPER

Check for leakage.

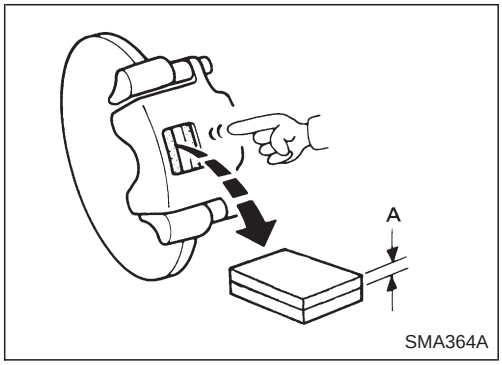

SMA364A

PAD

Check wear or damage.

Minimum thickness: 2 mm (0.08 in)

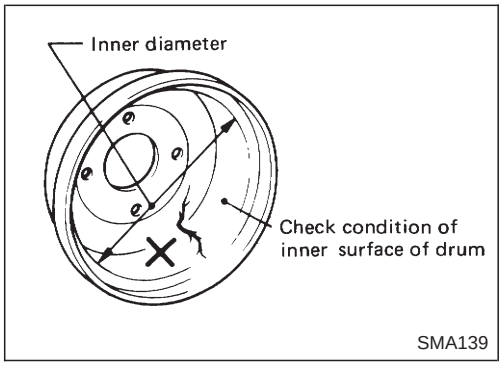

SMA139

Checking Drum Brake

WHEEL CYLINDER

Check for leakage.

DRUM

Check condition and inner surface.

Drum repair limit (Maximum inner diameter):

LT26B	**261.5 mm (10.30 in)**
LT30A	**296.5 mm (11.67 in)**

Checking Drum Brake (Cont'd)

LINING

Check wear or damage.

Lining wear limit (Minimum thickness):
1.5 mm (0.059 in)

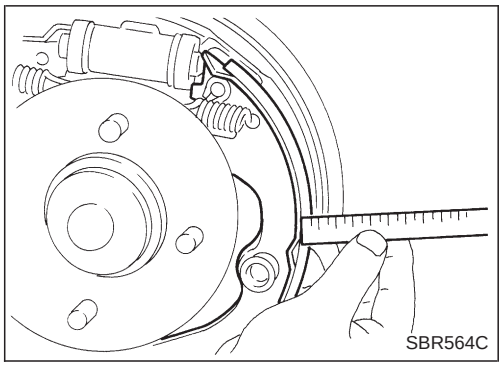
SBR564C

TEMPORARY METHOD FOR CHECKING LINING WEAR

Remove inspection hole plug and check for lining wear.

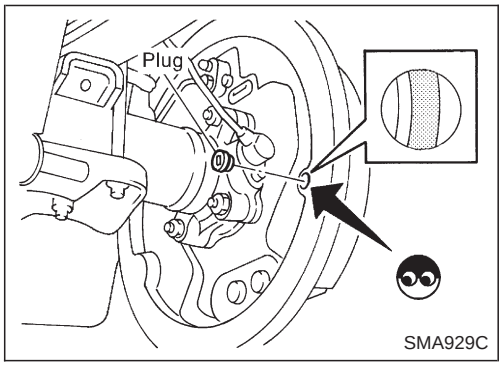

SMA929C

Checking Steering Gear and Linkage

STEERING GEAR

- Check gear housing and boots for looseness, damage or grease leakage.
- Check connection with steering column for looseness.

STEERING LINKAGE

- Check ball joint, dust cover and other component parts for looseness, wear, damage or grease leakage.

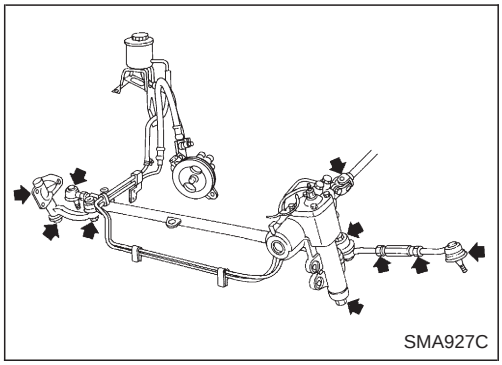
SMA927C

Checking Power Steering Fluid and Lines

- Check fluid level with engine off.
- Check fluid level with dipstick on reservoir cap. Use ''HOT'' range at fluid temperatures of 50 to 80°C (122 to 176°F). Use ''COLD'' range at fluid temperatures of 0 to 30°C (32 to 86°F).

CAUTION:

- **Do not overfill.**
- **Recommended fluid is Automatic Transmission Fluid type ''DEXRON™ IIE'', ''DEXRON™ III'' or equivalent.**

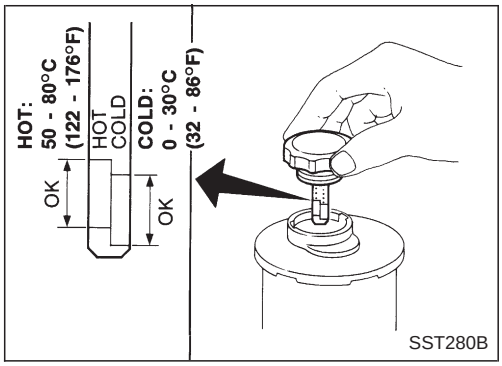

SST280B

- Check lines for improper attachment, leaks, cracks, damage, loose connections, chafing or deterioration.

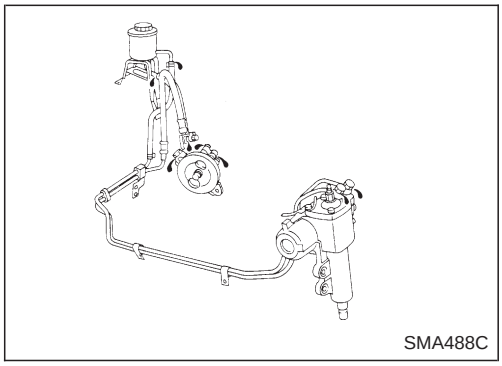
SMA488C

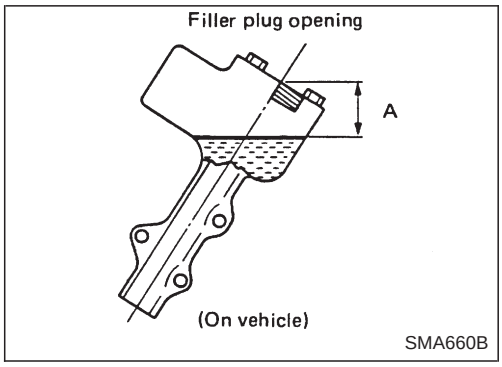

Checking Steering Gear Oil Level and Leaks

- Check steering gear for oil level and leakage.
- Check oil level.

  Oil level:

  Distance "A"

  20 mm (0.79 in) or less

Be careful not to overflow gear oil when filling up.

Lubricating Hood Latches, Locks and Hinges

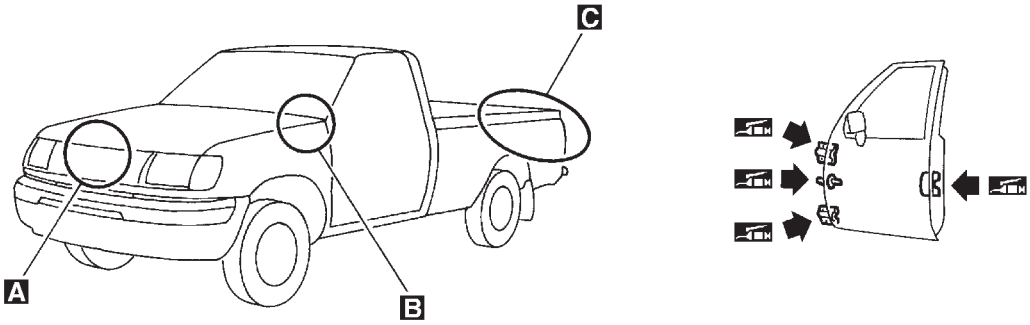

: Grease-up points

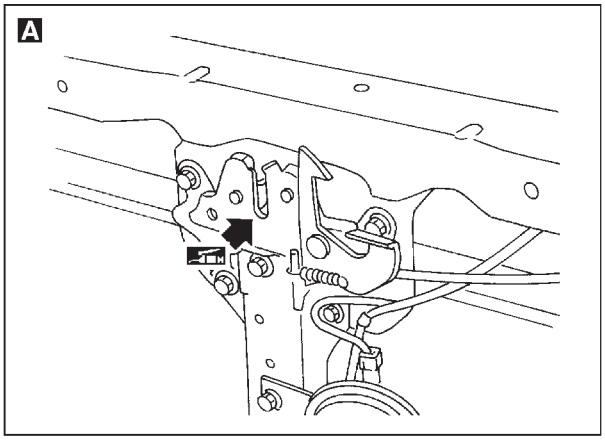

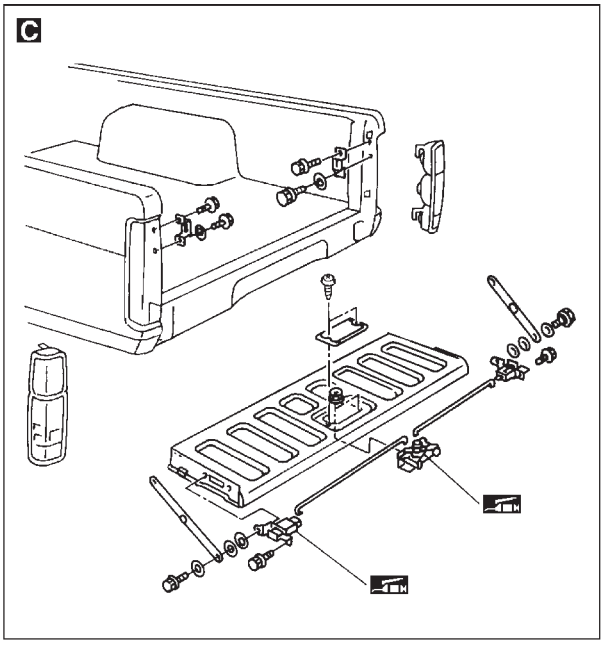

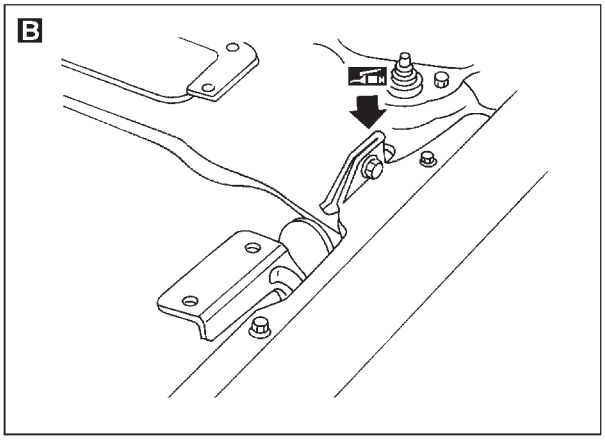

SMA944C

Checking Seat Belts, Buckles, Retractors, Anchors and Adjusters

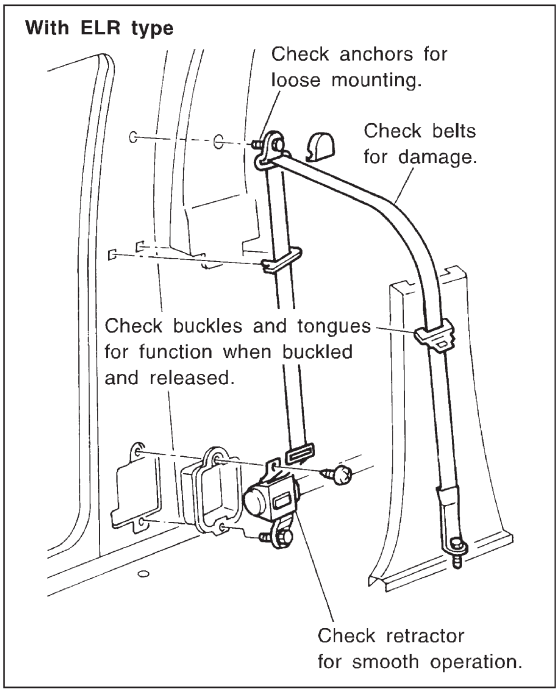

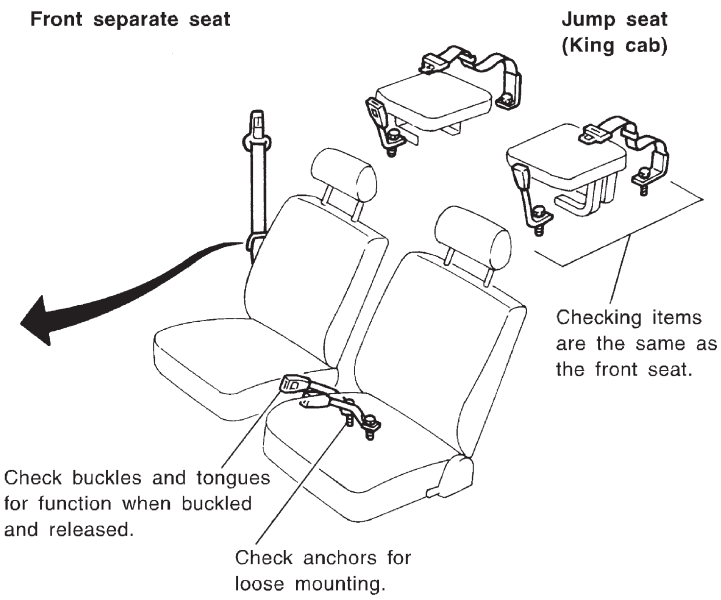

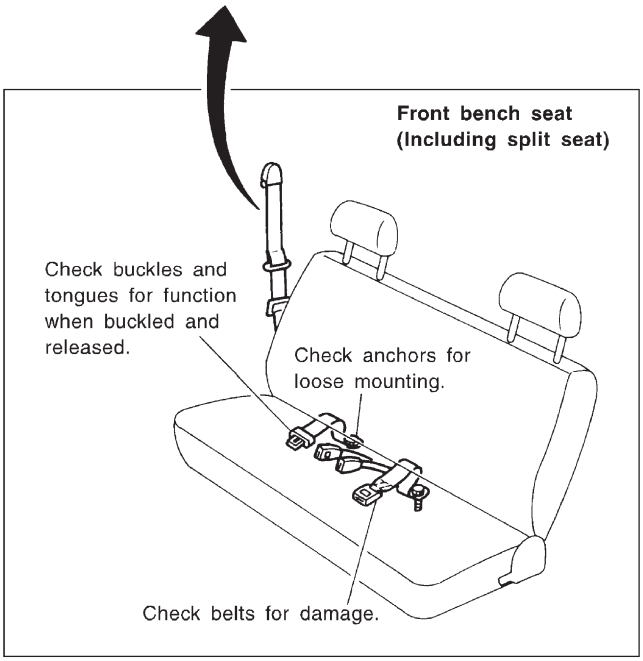

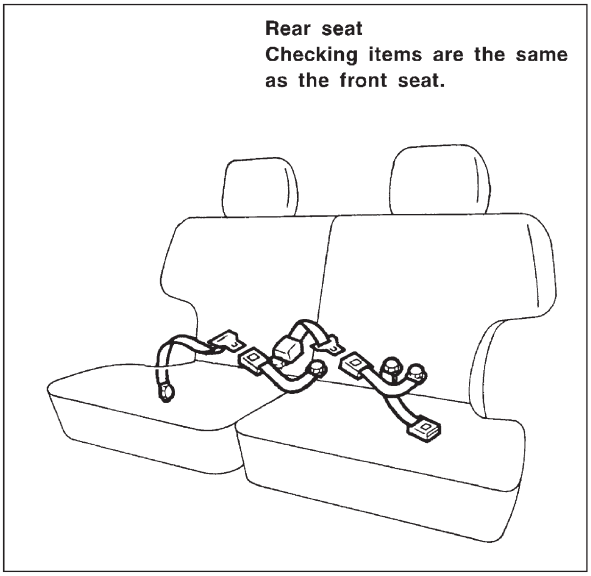

CAUTION:

1. **If the vehicle is collided or overturned, replace the entire belt assembly, regardless of nature of accident.**
2. **If the condition of any component of a seat belt is questionable, do not repair seat belt, but replace it as a belt assembly.**
3. **If webbing is cut, frayed, or damaged, replace belt assembly.**
4. **Do not spill drinks, oil, etc. on inner lap belt buckle. Never oil tongue and buckle.**
5. **Use a NISSAN genuine seat belt assembly.**

Anchor bolt:

: 43 - 55 N·m (4.4 - 5.6 kg-m, 32 - 41 ft-lb)

SMA016D

Checking Body Corrosion

Visually check the body sheet metal panel for corrosion, paint damage (scratches, chipping, rubbing, etc.) or damage to the anti-corrosion materials. In particular, check the following locations.

Hemmed portion

Hood front end, door lower end, trunk lid rear end, etc.

Panel joint

Side sill of rear fender and center pillar, rear wheel housing of rear fender, around strut tower in engine compartment, etc.

Panel edge

Trunk lid opening, sunroof opening, fender wheelarch flange, fuel filler lid flange, around holes in panel, etc.

Parts contact

Waist molding, windshield molding, bumper, etc.

Protectors

Damage or condition of mudguard, fender protector, chipping protector, etc.

Anti-corrosion materials

Damage or separation of anti-corrosion materials under the body.

Drain holes

Condition of drain holes at door and side sill.
When repairing corroded areas, refer to the Corrosion Repair Manual.

Engine Maintenance (KA)

INSPECTION AND ADJUSTMENT

Drive belt deflection

Unit: mm (in)

	Used belt deflection		Deflection of new belt
	Limit	Deflection after adjustment	
Alternator	17 (0.67)	10 - 12 (0.39 - 0.47)	8 - 10 (0.31 - 0.39)
Air conditioner compressor	16 (0.63)	10 - 12 (0.39 - 0.47)	8 - 10 (0.31 - 0.39)
Power steering oil pump	15 (0.59)	9 - 11 (0.35 - 0.43)	7 - 9 (0.28 - 0.35)
Applied pushing force	98 N (10 kg, 22 lb)		

Spark plug

Standard type		ZFR5E-11
Hot type		ZFR4E-11
Cold type		ZFR6E-11
Plug gap	mm (in)	1.0 - 1.1 (0.039 - 0.043)

Ignition wire

Resistance	kΩ/m (kΩ/ft)	Less than 12.2 (3.72)

Engine Maintenance (TD)

INSPECTION AND ADJUSTMENT

Drive belt deflection

Unit: mm (in)

	Used belt deflection		Deflection of new belt
	Limit	Deflection after adjustment	
Alternator	20 (0.79)	11 - 13 (0.43 - 0.51)	9 - 11 (0.35 - 0.43)
Air conditioner compressor	12 (0.47)	6 - 7.5 (0.236 - 0.295)	5 - 6.5 (0.197 - 0.256)
Power steering oil pump	15 (0.59)	8 - 9.5 (0.315 - 0.374)	7 - 8.5 (0.276 - 0.335)
Applied pushing force	98 N (10 kg, 22 lb)		

Inspect drive belt deflections when engine is cold.

Valve clearance (Hot)

Intake and exhaust	mm (in)	0.30 - 0.40 (0.012 - 0.016)

Injection nozzle

Injection pressure kPa (bar, kg/cm^2, psi)	
Used nozzle	9,807 - 10,297 (98.1 - 103.0, 100 - 105, 1,422 - 1,493)
New nozzle	10,297 - 11,278 (103.0 - 112.8, 105 - 115, 1,493 - 1,635)

Idle speed

		FICD OFF	FICD ON
Idle speed	rpm		
TD25		700±50	850±50

Chassis and Body Maintenance

INSPECTION AND ADJUSTMENT

Wheel balance

Maximum allowable unbalance	Dynamic (At rim flange)	g (oz)	10 (0.35) (one side)
	Static	g (oz)	20 (0.71)