TRANSFER

SECTION TF

GI
MA
EM
LC
EC
FE
AT
TF
PD
AX
SU
BR
ST
RS
BT
HA
SC
EL
IDX

CONTENTS

PRECAUTIONS 3
Supplemental Restraint System (SRS) "AIR BAG" and "SEAT BELT PRE-TENSIONER" 3
Precautions 3
Service Notice 4
Wiring Diagrams and Trouble Diagnosis 4
PREPARATION 5
Special Service Tools 5
Commercial Service Tools 9
ALL-MODE 4WD SYSTEM 10
Cross-sectional View 10
Control System 11
ALL-MODE 4WD TRANSFER BASIC CONTROL 12
HYDRAULIC CONTROL CIRCUITS 12
OUTLINE 12
CONTROL SYSTEM DIAGRAM 13
INDICATIONS OF 4WD WARNING LAMP 13
Location of Electrical Parts 14
Description of Electrical Parts 15
TRANSFER MOTOR 15
WAIT DETECTION SWITCH 15
2-4WD SHIFT SOLENOID VALVE 16
LINE PRESSURE SWITCH 16
Circuit Diagram for Quick Pinpoint Check 17
Wiring Diagram - TF - 18
ON BOARD DIAGNOSTIC SYSTEM DESCRIPTION 27
Trouble Diagnosis without CONSULT-II 27
DESCRIPTION 27
SELF-DIAGNOSTIC PROCEDURE 28
INDICATIONS OF 4WD WARNING LAMP 29
Trouble Diagnosis with CONSULT-II 30
SELF-DIAGNOSIS 30
SELF-DIAGNOSTIC ITEMS 31
DATA MONITOR 33
DATA MONITOR ITEMS 34
REFERENCE VALUE IN DATA MONITOR MODE 36
WORK SUPPORT 38
CLUTCH FORCE RELEASE LIMIT ADJUSTMENT 39
TROUBLE DIAGNOSIS - INTRODUCTION 41
Introduction 41
DESCRIPTION 41
DIAGNOSTIC WORKSHEET 41
Work Flow 43
HOW TO PERFORM TROUBLE DIAGNOSES FOR QUICK AND ACCURATE REPAIR 43
TROUBLE DIAGNOSIS - BASIC INSPECTION 44
Listen to Customer Complaints 44
Transfer Fluid Check 44
Road Test 44
PREPARATION FOR ROAD TEST 44
1. CHECK BEFORE ENGINE IS STARTED 45
2. CHECK AT IDLE 47
3. CRUISE TEST 51
TROUBLE DIAGNOSIS - GENERAL DESCRIPTION 54
Transfer Control Unit Terminals and Reference Value 54
REMOVAL AND INSTALLATION OF TRANSFER CONTROL UNIT 54
INSPECTION OF TRANSFER CONTROL UNIT 54
TRANSFER CONTROL UNIT INSPECTION TABLE 55
VEHICLE SPEED SENSOR (FRONT REVOLUTION SENSOR) 61
Diagnostic Procedure 61
4WD SOLENOID VALVE 64
Diagnostic Procedure 64
2-4WD SHIFT SOLENOID VALVE AND 4WD SHIFT SWITCH 66
Diagnostic Procedure 66
TRANSFER MOTOR AND TRANSFER MOTOR RELAY 70
Diagnostic Procedure 70
TRANSFER FLUID TEMPERATURE SENSOR 73
Diagnostic Procedure 73
ATP SWITCH, WAIT DETECTION SWITCH AND NEUTRAL-4LO SWITCH 76
Diagnostic Procedure 76
CLUTCH PRESSURE SWITCH 80
Diagnostic Procedure 80

CONTENTS (Cont'd)

LINE PRESSURE SWITCH 83
Diagnostic Procedure 83
ABS OPERATION SIGNAL 86
Diagnostic Procedure 86
DATA ERASE/DISPLAY 88
Diagnostic Procedure 88
SHIFT ACTUATOR 89
Diagnostic Procedure 89
SHIFT ACTUATOR POSITION SWITCH 92
Diagnostic Procedure 92
SHIFT ACTUATOR CIRCUIT 94
Diagnostic Procedure 94
TROUBLE DIAGNOSES FOR SYMPTOMS 98
Symptom 1. 4WD Shift Indicator Lamp Does Not Turn ON 98
Symptom 2. 4WD Warning Lamp Does Not Turn ON 100
Symptom 3. 4WD Shift Indicator Lamp Does Not Turn OFF 102
Symptom 4. ATP Warning Lamp Does Not Turn ON 102
Symptom 5. 4LO Indicator Lamp Does Not Turn ON 104
Symptom 6. 4WD Shift Indicator Lamp Does Not Indicate ″4H″ 106
Symptom 7. 4WD Shift Indicator Lamp Repeats Flickering 107
Symptom 8. Tight Corner Braking Symptom 108
Symptom 9. 4WD System Does Not Operate 109
COMPONENT INSPECTION 111
4WD Shift Switch 111
2-4WD Shift Solenoid Valve and Transfer Fluid Temperature Sensor 111
4WD Solenoid Valve, Clutch Pressure Switch and Line Pressure Switch 111
Front Revolution Sensor 112
Transfer Dropping Resistor 112
ATP Switch, Neutral-4LO Switch and Wait Detection Switch 112
Transfer Motor 113
Transfer Motor Relay 113
Transfer Sub-harness 113
FRONT REVOLUTION SENSOR SUB-HARNESS CONNECTOR 113
TRANSFER SWITCH ASSEMBLY SUB-HARNESS CONNECTOR 114
TRANSFER TERMINAL CORD ASSEMBLY SUB-HARNESS CONNECTOR 114
Transfer Shift Relay (High & low) 114
Actuator & Actuator Position Switch 115
ACTUATOR 115
ACTUATOR POSITION SWITCH 115
ON-VEHICLE SERVICE 116
Replacing Oil Seal 116
FRONT CASE OIL SEAL 116
SHIFT SHAFT OIL SEAL 117
REAR OIL SEAL 117
Transfer Motor 117
REMOVAL 117
INSTALLATION 117
Transfer Oil Filter 118
REMOVAL 118
INSTALLATION 118
REMOVAL AND INSTALLATION 119
Removal 119
Installation 119
OVERHAUL 120
Transfer Gear Control 120
Transfer Components 121
DISASSEMBLY 123
Rear Case 123
DISASSEMBLY 123
Center Case 123
DISASSEMBLY 123
Front Case 133
DISASSEMBLY 133
REPAIR FOR COMPONENT PARTS 137
Front Case 137
INSPECTION 137
Center Case 138
INSPECTION 138
ASSEMBLY 141
Front Case 141
ASSEMBLY 141
Center Case 145
ASSEMBLY 145
Final Assembly 153
SERVICE DATA AND SPECIFICATIONS (SDS) 157
General Specifications 157
Inner Gear and Outer Gear 157
SUB-OIL PUMP 157
MAIN OIL PUMP 157
Control Valve 157
VALVE 157
SPRING 157
Clutch 158
DRIVE PLATE 158
DRIVEN PLATE 158
RETURN SPRING 158
RETAINING PLATE 158
Seal Ring (Mainshaft side) 159
Bearing Race (Thrust needle bearing side) 159
Snap Ring (Sun gear side) 159

Supplemental Restraint System (SRS) "AIR BAG" and "SEAT BELT PRE-TENSIONER"

NBTF0001

The Supplemental Restraint System such as "AIR BAG" and "SEAT BELT PRE-TENSIONER" used along with a seat belt, helps to reduce the risk or severity of injury to the driver and front passenger for certain types of collision. The SRS system composition which is available to INFINITI QX4 is as follows:

- For a frontal collision
  The Supplemental Restraint System consists of driver air bag module (located in the center of the steering wheel), front passenger air bag module (located on the instrument panel on passenger side), seat belt pre-tensioners, a diagnosis sensor unit, warning lamp, wiring harness and spiral cable.
- For a side collision
  The Supplemental Restraint System consists of side air bag module (located in the outer side of front seat), satellite sensor, diagnosis sensor unit (one of components of air bags for a frontal collision), wiring harness, warning lamp (one of components of air bags for a frontal collision).

Information necessary to service the system safely is included in the **RS** section of this Service Manual.

WARNING:

- **To avoid rendering the SRS inoperative, which could increase the risk of personal injury or death in the event of a collision which would result in air bag inflation, all maintenance must be performed by an authorized INFINITI dealer.**
- **Improper maintenance, including incorrect removal and installation of the SRS, can lead to personal injury caused by unintentional activation of the system. For removal of Spiral Cable and Air Bag Module, see the RS section.**
- **Do not use electrical test equipment on any circuit related to the SRS unless instructed to in this Service Manual. Spiral cable and wiring harnesses covered with yellow insulation tape either just before the harness connectors or for the complete harness are related to the SRS.**

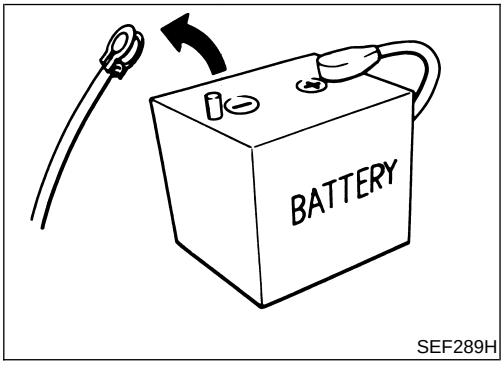

SEF289H

Precautions

NBTF0092

- **Before connecting or disconnecting the Transfer control unit harness connector, turn ignition switch OFF and disconnect negative battery terminal. Failure to do so may damage the Transfer control unit. Because battery voltage is applied to Transfer control unit even if ignition switch is turned off.**

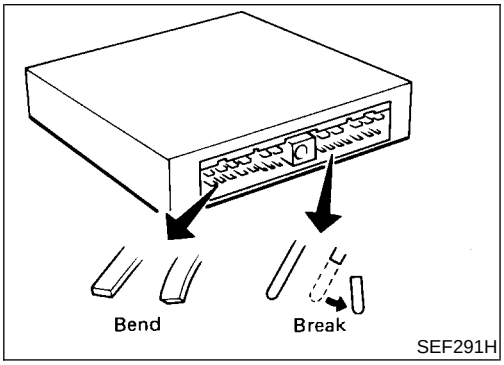

SEF291H

- **When connecting or disconnecting pin connectors into or from Transfer control unit, take care not to damage pin terminals (bend or break).**
  Make sure that there are not any bends or breaks on Transfer control unit pin terminal, when connecting pin connectors.

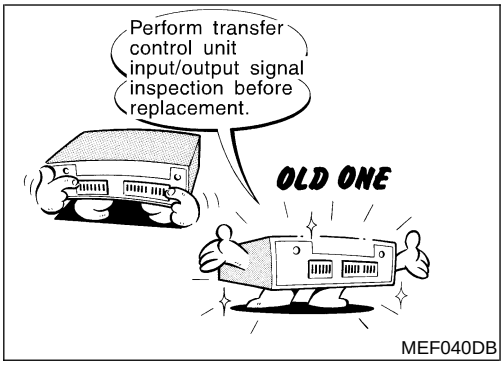

- **Before replacing Transfer control unit, perform Transfer control unit input/output signal inspection and make sure whether Transfer control unit functions properly or not. (See page TF-55.)**

Service Notice

NBTF0002

1) Before proceeding with disassembly, thoroughly clean the outside of the all-mode 4WD transfer. It is important to prevent the internal parts from becoming contaminated by dirt or other foreign matter.
2) Disassembly should be done in a clean work area.
3) Use lint-free cloth or towels for wiping parts clean. Common shop rags can leave fibers that could interfere with the operation of the all-mode 4WD transfer.
4) Place disassembled parts in order for easier and proper assembly.
5) All parts should be carefully cleaned with a general purpose, non-flammable solvent before inspection or reassembly.
6) Gaskets, seals and O-rings should be replaced any time the all-mode 4WD transfer is disassembled.
7) It is very important to perform functional tests whenever they are indicated.
8) The valve body contains precision parts and requires extreme care when parts are removed and serviced. Place removed parts in a parts rack in order to replace them in correct positions and sequences. Care will also prevent springs and small parts from becoming scattered or lost.
9) Properly installed valves, sleeves, plugs, etc. will slide along bores in valve body under their own weight.
10) Before assembly, apply a coat of recommended ATF to all parts. Apply petroleum jelly to protect O-rings and seals, and to hold bearings and washers in place during assembly. Do not use grease.
11) Extreme care should be taken to avoid damage to O-rings, seals and gaskets when assembling.
12) After overhaul, refill the transfer with new ATF.
13) When the all-mode 4WD transfer drain plug is removed, only some of the fluid is drained. Old all-mode 4WD transfer fluid will remain in torque converter and ATF cooling system. Always follow the procedures, MA-22, "Changing All-mode 4WD Transfer Fluid".

Wiring Diagrams and Trouble Diagnosis

NBTF0003

When you read wiring diagrams, refer to the following:

- GI-11, "HOW TO READ WIRING DIAGRAMS"
- EL-9, "POWER SUPPLY ROUTING"

When you perform trouble diagnosis, refer to the following:

- GI-35, "HOW TO FOLLOW TEST GROUPS IN TROUBLE DIAGNOSIS"
- GI-24, "HOW TO PERFORM EFFICIENT DIAGNOSIS FOR AN ELECTRICAL INCIDENT"

Special Service Tools

NBTF0004

The actual shapes of Kent-Moore tools may differ from those of special service tools illustrated here.

Tool number (Kent-Moore No.) Tool name	Description	
KV38108300 (J44195) Companion flange wrench	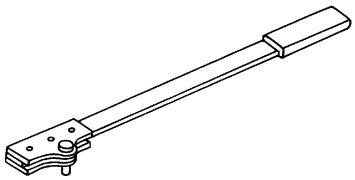 NT771	Removing companion flange nut Installing companion flange nut
KV40100621 (J26091) Drift	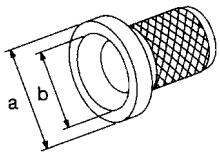 NT086	Installing front drive shaft bearing **a: 76 mm (2.99 in) dia.** **b: 69 mm (2.72 in) dia.**
ST30032000 (—) Base	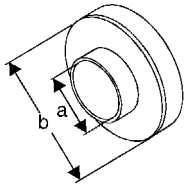 NT660	Installing front drive shaft bearing **a: 38 mm (1.50 in) dia.** **b: 80 mm (3.15 in) dia.**
ST30021000 (—) Puller	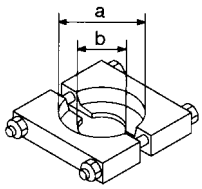 NT411	Removing front drive shaft bearing **a: 110 mm (4.33 in) dia.** **b: 68 mm (2.68 in) dia.**
ST33052000 (—) Adapter	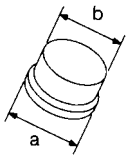 NT431	Removing front drive shaft bearing **a: 28 mm (1.10 in) dia.** **b: 22 mm (0.87 in) dia.**
ST35271000 (J26091) Drift	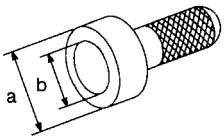 NT115	Installing rear oil seal Removing and installing press flange snap ring **a: 72 mm (2.83 in) dia.** **b: 63 mm (2.48 in) dia.**

Special Service Tools (Cont'd)

Tool number (Kent-Moore No.) Tool name	Description	
ST27863000 (—) Support ring	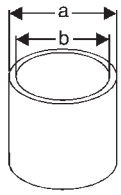 NT661	Removing and installing press flange snap ring **a: 74.5 mm (2.933 in) dia.** **b: 62.5 mm (2.461 in) dia.**
KV40104710 (—) Support ring	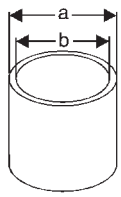 NT661	Removing and installing press flange snap ring **a: 76.3 mm (3.004 in) dia.** **b: 67.9 mm (2.673 in) dia.**
ST35291000 (—) Remover	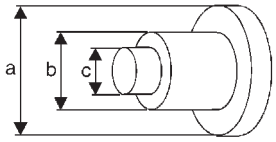 NT662	Removing mainshaft rear bearing **a: 40 mm (1.57 in) dia.** **b: 29.5 mm (1.161 in) dia.** **c: 22.5 mm (0.886 in) dia.**
ST30090010 (—) Remover	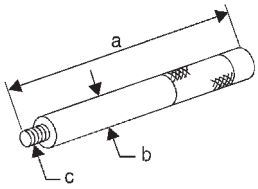 NT663	Removing mainshaft rear bearing **a: 165 mm (6.50 in)** **b: 25 mm (0.98 in) dia.** **c: M16 x P2.0**
KV38100500 (—) Drift	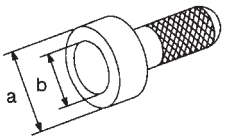 NT115	Installing front drive shaft oil seal **a: 80 mm (3.15 in) dia.** **b: 60 mm (2.36 in) dia.**
KV40100621 (J25273) Drift	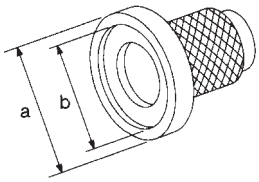 NT104	Installing mainshaft rear bearing **a: 76 mm (2.99 in) dia.** **b: 69 mm (2.72 in) dia.**

Tool number (Kent-Moore No.) Tool name	Description	
KV32101100 (—) Pin punch	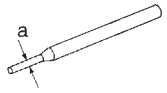 NT410	Removing and installing L-H fork, 2-4 fork **a: 6 mm (0.24 in) dia.**
ST3306S001 (J22888-D) Differential side bearing puller set 1: ST33051001 (—) Puller 2: ST33061000 (J8107-2) Adapter	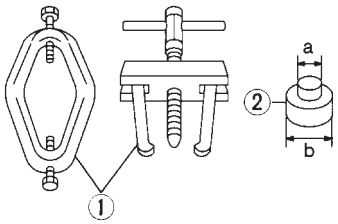 NT072	Installing mainshaft rear bearing Removing sun gear assembly **a: 28.5 mm (1.122 in) dia.** **b: 38 mm (1.50 in) dia.**
ST30911000 (—) Puller	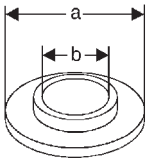 NT664	Installing mainshaft and planetary carrier assembly **a: 98 mm (3.86 in) dia.** **b: 40.5 mm (1.594 in) dia.**
KV381054S0 (—) Outer race puller	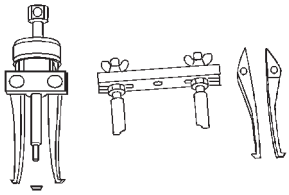 NT665	Removing rear oil seal
KV40105230 (—) Adapter	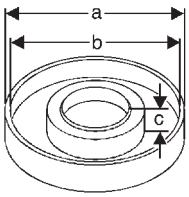 NT666	Installing planetary carrier assembly **a: 92 mm (3.62 in) dia.** **b: 86 mm (3.39 in) dia.** **c: 12 mm (0.47 in)**
KV40105310 (—) Support ring	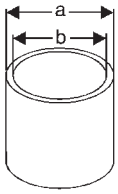 NT661	Installing planetary carrier assembly **a: 89.1 mm (3.508 in) dia.** **b: 80.7 mm (3.177 in) dia.**

Special Service Tools (Cont'd)

Tool number (Kent-Moore No.) Tool name	Description	
KV40105500 (—) Support	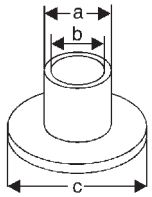 NT667	Installing planetary carrier assembly **a: 69 mm (2.72 in) dia.** **b: 52 mm (2.05 in) dia.** **c: 120 mm (4.72 in) dia.**
KV38100200 (—) Drift	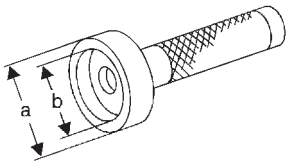 NT673	Installing transfer cover oil seal **a: 65 mm (2.56 in) dia.** **b: 49 mm (1.93 in) dia.**
KV31103300 (—) Drift	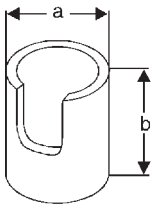 NT668	Removing and installing press flange snap ring **a: 76.3 mm (3.004 in) dia.** **b: 130 mm (5.12 in)**
KV31103400 (—) Clutch piston attachment 1 Shaft-drift 2 Guide-cylinder	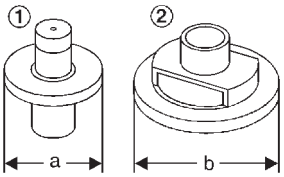 NT669	Installing clutch piston **a: 88.5 mm (3.484 in) dia.** **b: 158 mm (6.22 in) dia.**
ST33290001 (J25810-A) Puller	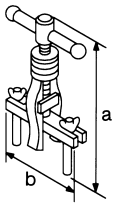 NT414	Removing center case oil seal Removing rear oil seal **a: 250 mm (9.84 in)** **b: 160 mm (6.30 in)**
ST33051001 (J22888) Puller	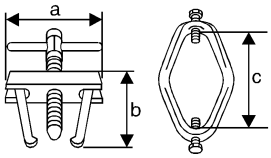 NT824	Removing companion flange **a: 135 mm (5.31 in)** **b: 100 mm (3.94 in)** **c: 170 mm (6.69 in)**

Tool number (Kent-Moore No.) Tool name	Description
(J35864) Drift	Installing oil seal 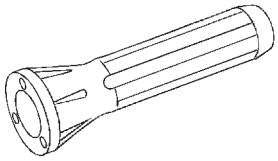 NT671

Commercial Service Tools

NBTF0005

Tool name	Description
Puller	Removing companion flange, clutch gear and mainshaft gear bearing 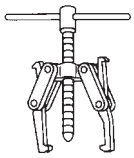 NT077

Cross-sectional View

NBTF0006

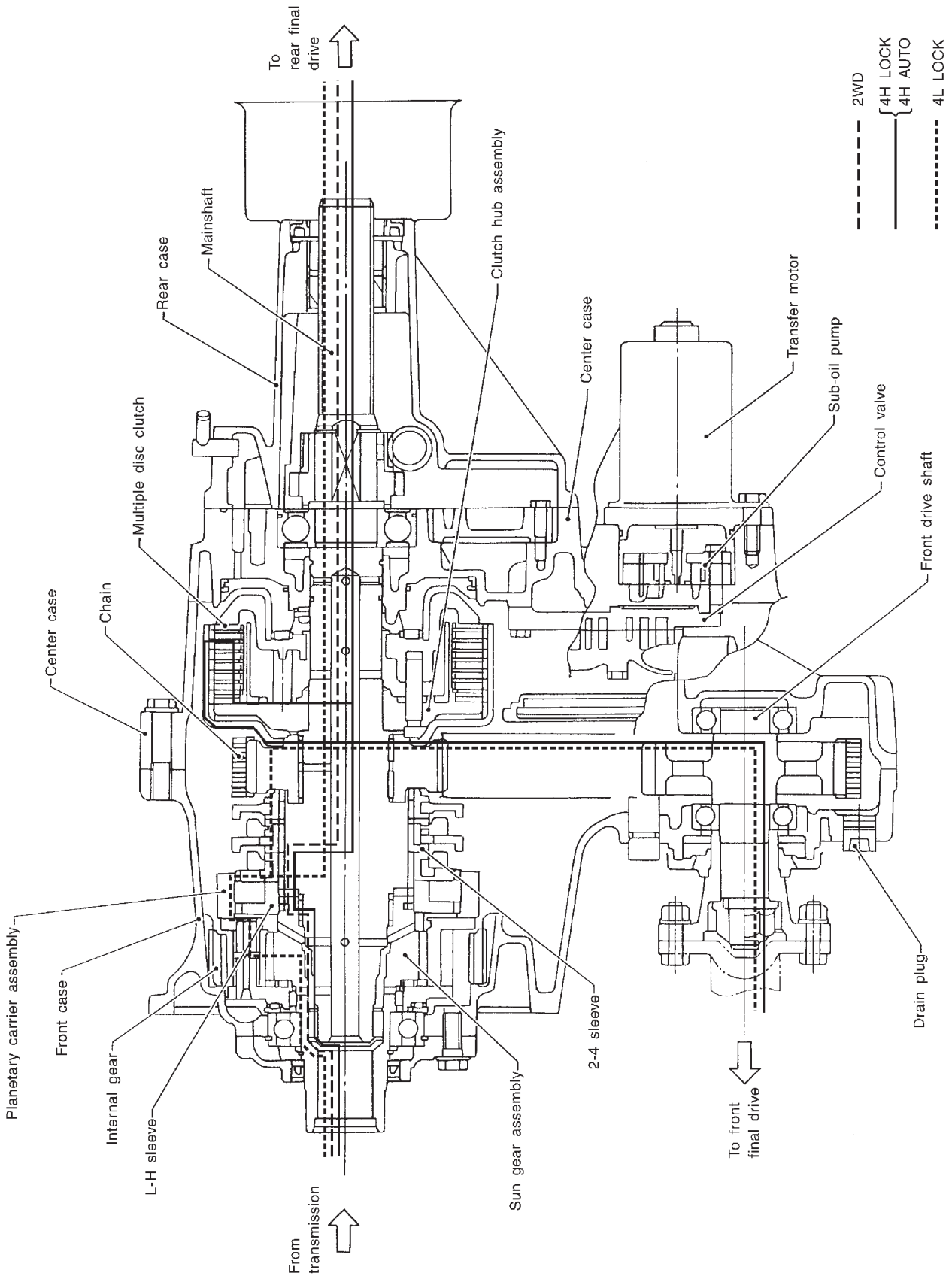

SMT953CA

Control System

NBTF0007

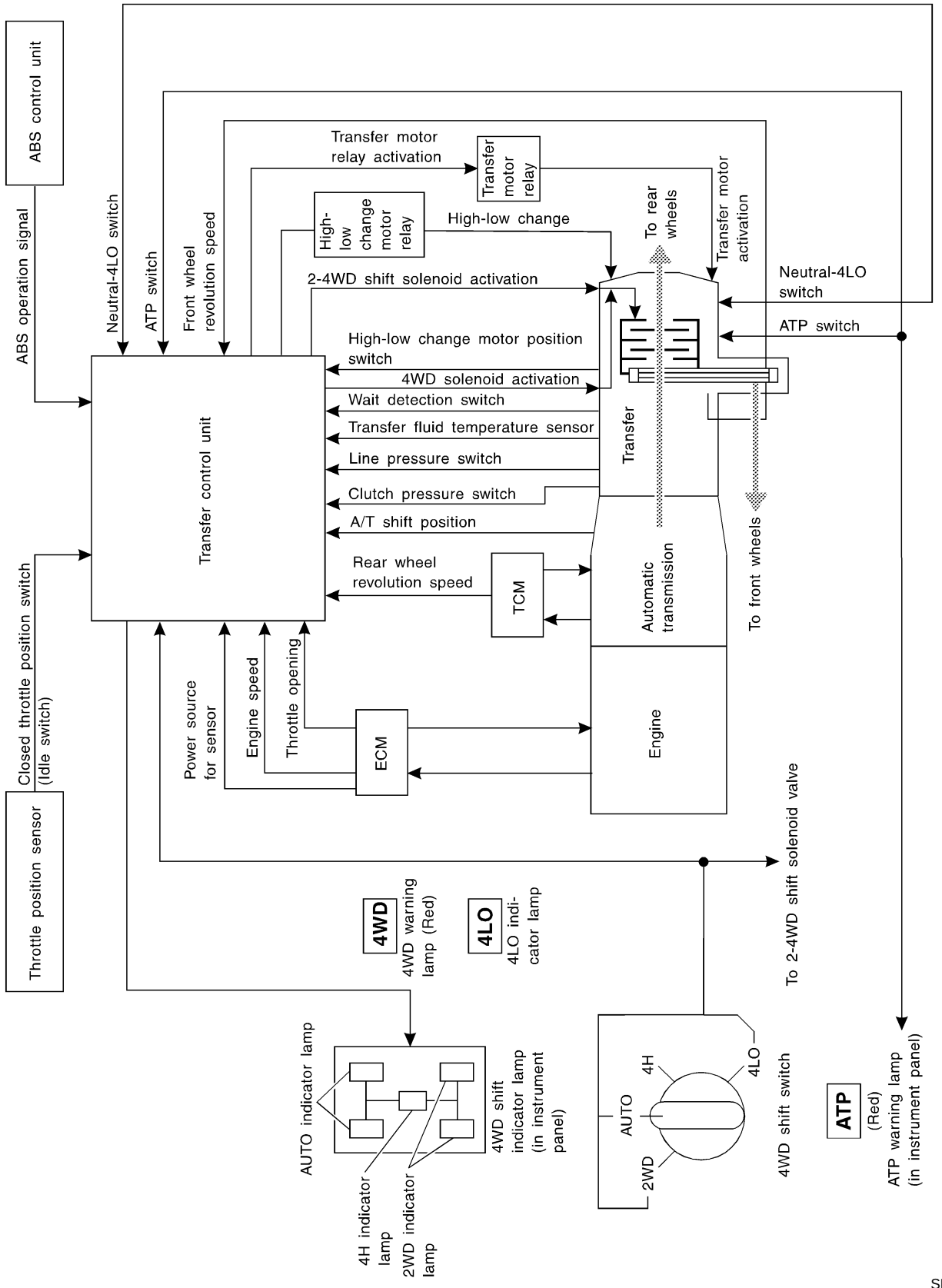

SMT961D

ALL-MODE 4WD TRANSFER BASIC CONTROL

NBTF0007S01

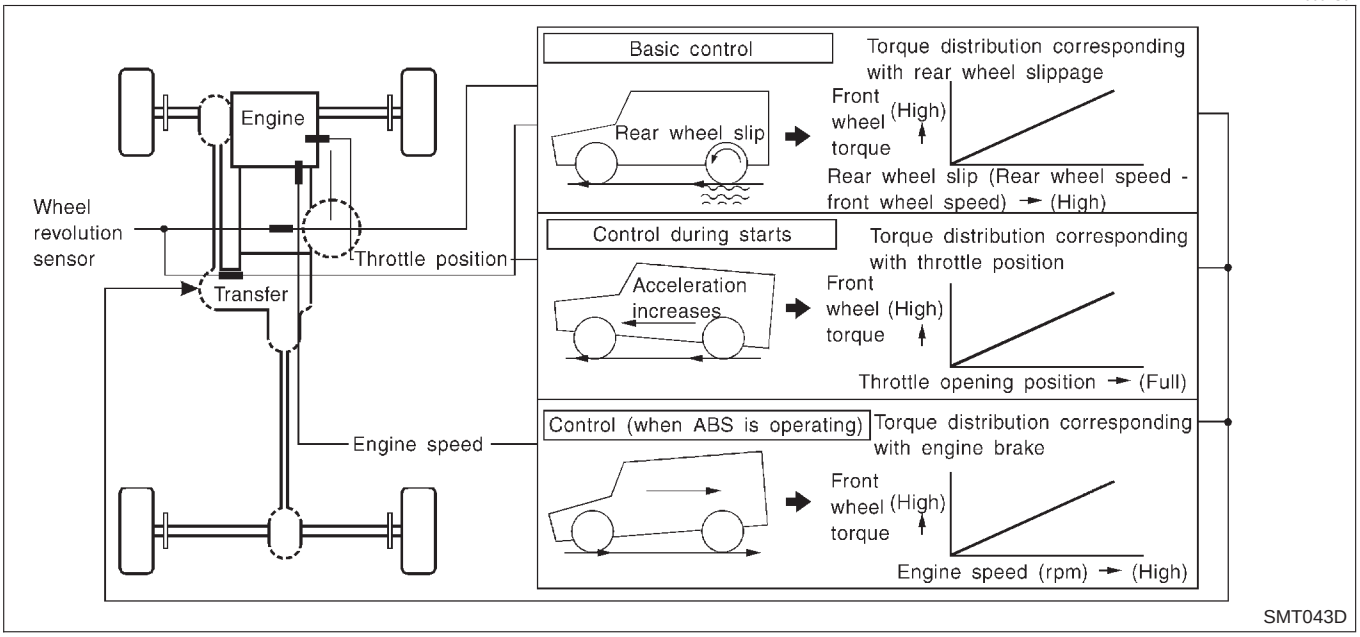

HYDRAULIC CONTROL CIRCUITS

NBTF0007S02

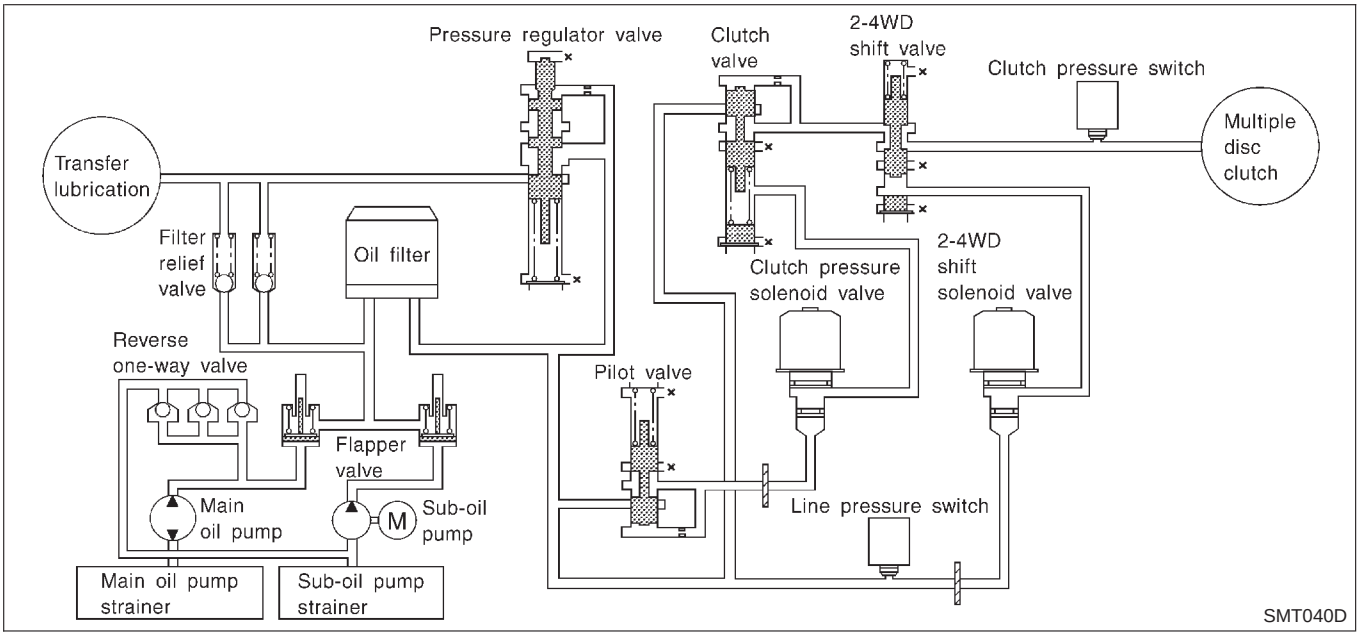

OUTLINE

NBTF0007S03

All-mode 4WD transfer is controlled by the transfer control unit and sensors.

If a malfunction occurs in the all-mode 4WD system, the 4WD warning lamp lights up to indicate the system malfunction. There are two ways to identify the cause of the malfunction.

1) Performing the self-diagnosis. (The 4WD warning lamp will indicate what kind of malfunction has occurred by flickering.)
2) Performing diagnosis using CONSULT-II.

CONTROL SYSTEM DIAGRAM

NBTF0007S04

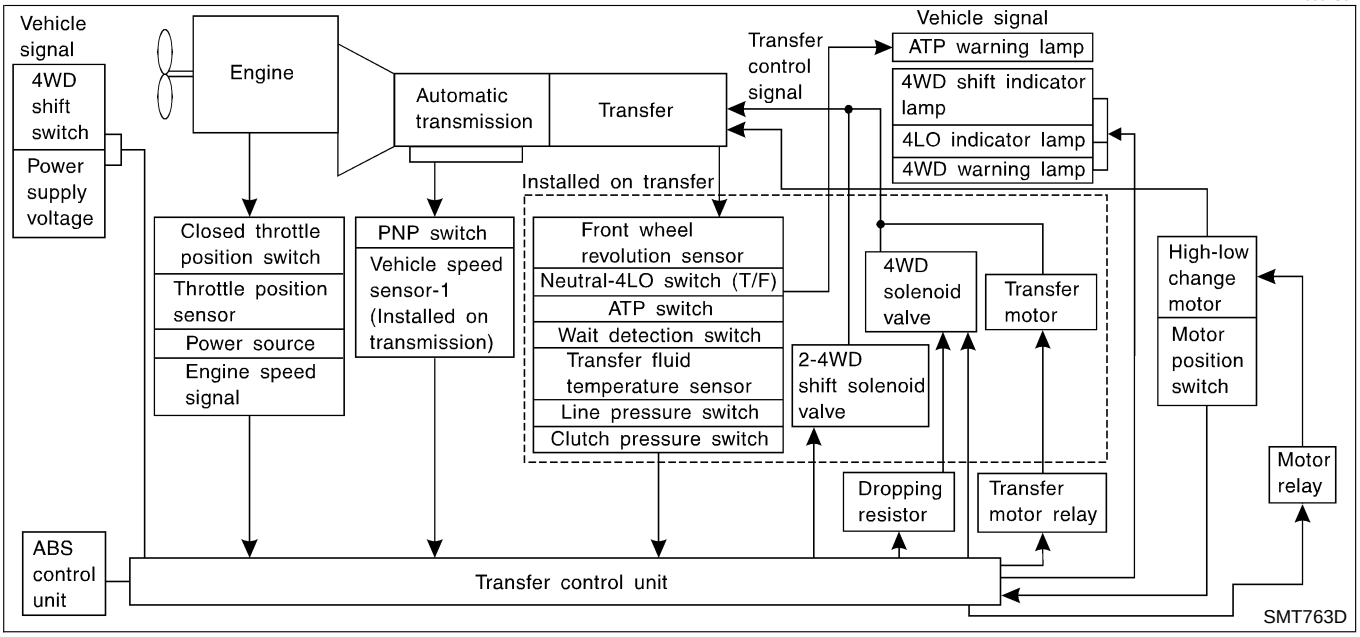

INDICATIONS OF 4WD WARNING LAMP

NBTF0007S05

Condition	Content	4WD warning lamp
During self-diagnosis	Indicates the malfunction position by number of flickers.	Flickers at malfunction mode.
Lamp check*	Checks the lamp by turning ON during engine starting. After engine starts, it turns OFF if there are no malfunctions.	ON
Malfunction in 4WD system*	Turns ON to indicate malfunction. When ignition switch is turned to "OFF" or the malfunction is corrected, it turns OFF.	ON
When vehicle is driven with different diameters of front and rear tires	Flickers once every 2 seconds. Turns OFF when ignition switch is "OFF".	Flickers once every 2 seconds.
High fluid temperature in transfer unit	When fluid temperature is high or fluid temperature sensor circuit is shorted, it flickers twice every second. It turns OFF when fluid temperature becomes normal.	Flickers twice a second.
Other than above (System is normal.)	Lamp is OFF.	OFF

*: When 4WD warning lamp is ON, all the 4WD shift indicator lamps turn OFF.

Location of Electrical Parts

NBTF0008

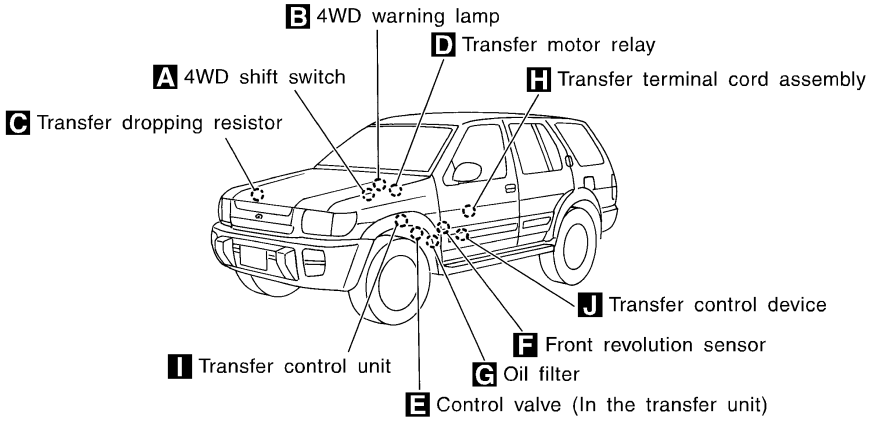

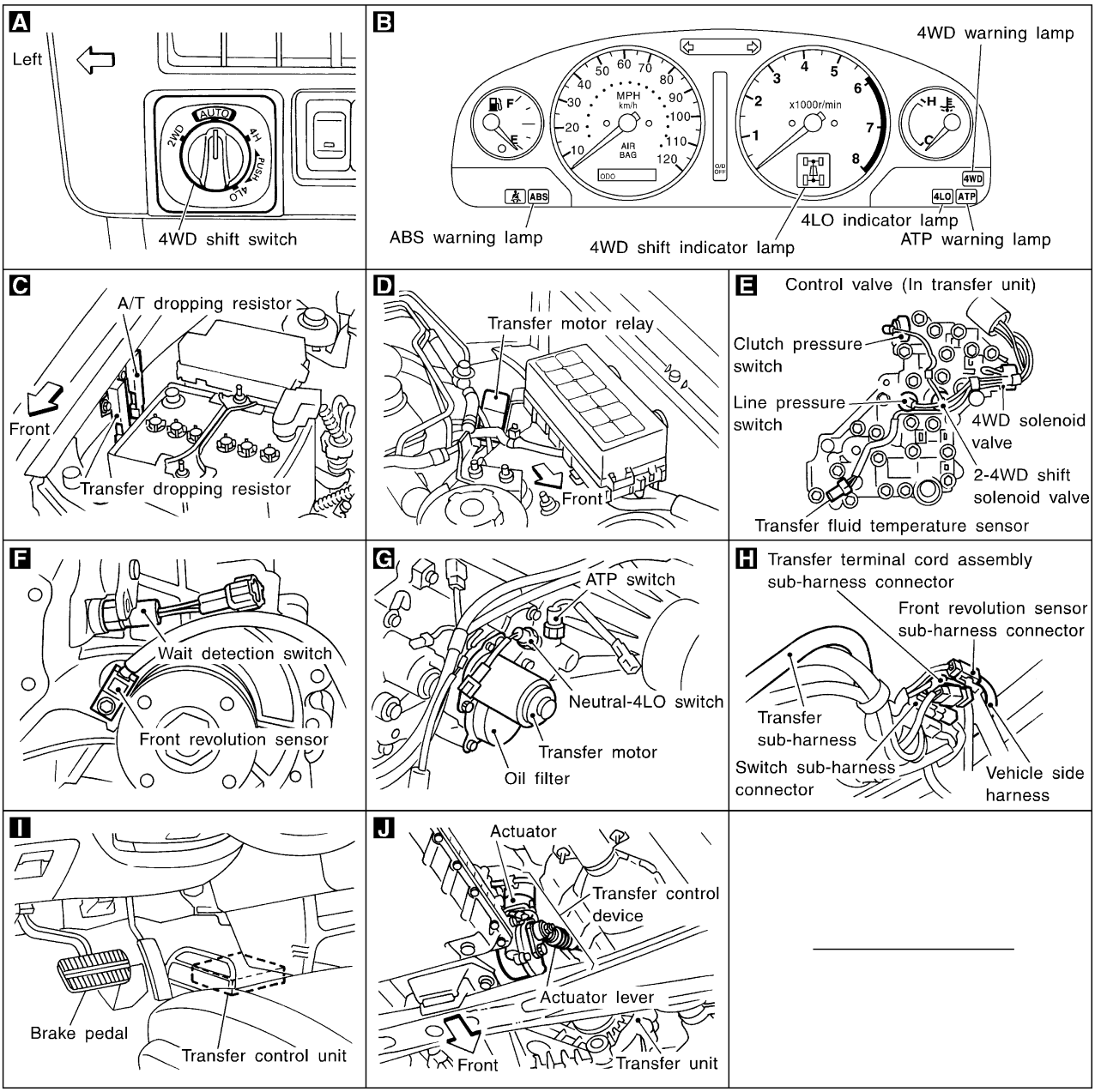

SMT959D

Description of Electrical Parts

NBTF0067

TRANSFER MOTOR

NBTF0067S01

1. The transfer motor drives the sub-oil pump to provide proper lubrication and oil pressure control when the vehicle is at standstill, during low-speed operations or is being driven in reverse.
2. The main oil pump is operated by the driving force of the mainshaft. In other words, sufficient oil pressure buildup does not occur when the vehicle is at standstill or during low-speed operations. While the vehicle is being driven in reverse, the main oil pump rotates in the reverse direction. Therefore the main oil pump does not discharge oil pressure. During any of the above vehicle operations, the transfer motor drives the sub-oil pump to compensate for insufficient oil pressure.
3. The transfer motor operates as follows:

1) The motor relay turns OFF in the 2WD mode.
2) The motor relay operates as described in the table below in modes other than the 2WD mode.

Table 1

PNP switch “R” position	VFF (Vehicle speed)	A/T position	Motor relay drive command
ON	—	R	ON
OFF	0 km/h	Positions other than the “P” or “N” positions	ON
	—	“P” or “N” position (See Table 2.)	—
	0 < VFF ≦ 30 km/h	—	ON
	30 < VFF < 35 km/h	—	HOLD
	35 km/h ≦ VFF	—	OFF

Table 2

A/T position	N-4L SW	4WD mode	Throttle position		
			0 - 0.07/8	0.07/8 - 1/8	1/8 - MAX
N	OFF	LOCK (4H)	ON	ON	ON
		Positions other than the LOCK position (2WD or AUTO)	See NOTE.	HOLD	ON
	ON	—	See NOTE.	HOLD	ON
P	—	—	See NOTE.	HOLD	ON

NOTE:
OFF (after 2.5 seconds have elapsed.)

4. 4WD shift switch, PNP switch, Neutral-4LO switch, vehicle speed sensor and throttle position sensor are used in conjunction with the transfer motor.

WAIT DETECTION SWITCH

NBTF0067S02

1. The wait detection switch releases the “booming” torque produced in the propeller shaft. After the release of the “booming” torque, the wait detection switch helps provide the 4WD lock gear (clutch drum) shifts. A difference may occur between the operation (“4LO” to “4H” shift only) of the 4WD shift switch and actual drive mode. At this point, the wait detection switch senses an actual drive mode.
2. The wait detection switch operates as follows:
   4WD lock gear (clutch drum) locked: ON
   4WD lock gear (clutch drum) released: OFF
3. The wait detection switch senses an actual drive mode and the 4WD shift indicator lamp indicates the vehicle drive mode.

2-4WD SHIFT SOLENOID VALVE

NBTF0067S03

The 2-4WD shift solenoid valve operates to apply oil pressure to the wet, multiplate clutch, depending on the drive mode. The driving force is transmitted to the front wheels through the clutch so the vehicle is set in the 4WD mode. Setting the vehicle in the 2WD mode requires no pressure buildup. In other words, pressure force applied to the wet, multiplate clutch becomes zero.

LINE PRESSURE SWITCH

NBTF0067S04

1. With the transfer system design, control of the oil pressure provides the transmission of drive torque to the front wheels. The main pressure to control the oil pressure is referred to as the line pressure.
   The line pressure switch determines whether or not adequate line pressure has built up under different operating conditions.
2. The line pressure switch turns ON when line pressure is produced.
3. The line pressure switch senses line pressure abnormalities and turns the 4WD warning lamp ON.

Circuit Diagram for Quick Pinpoint Check

NBTF0009

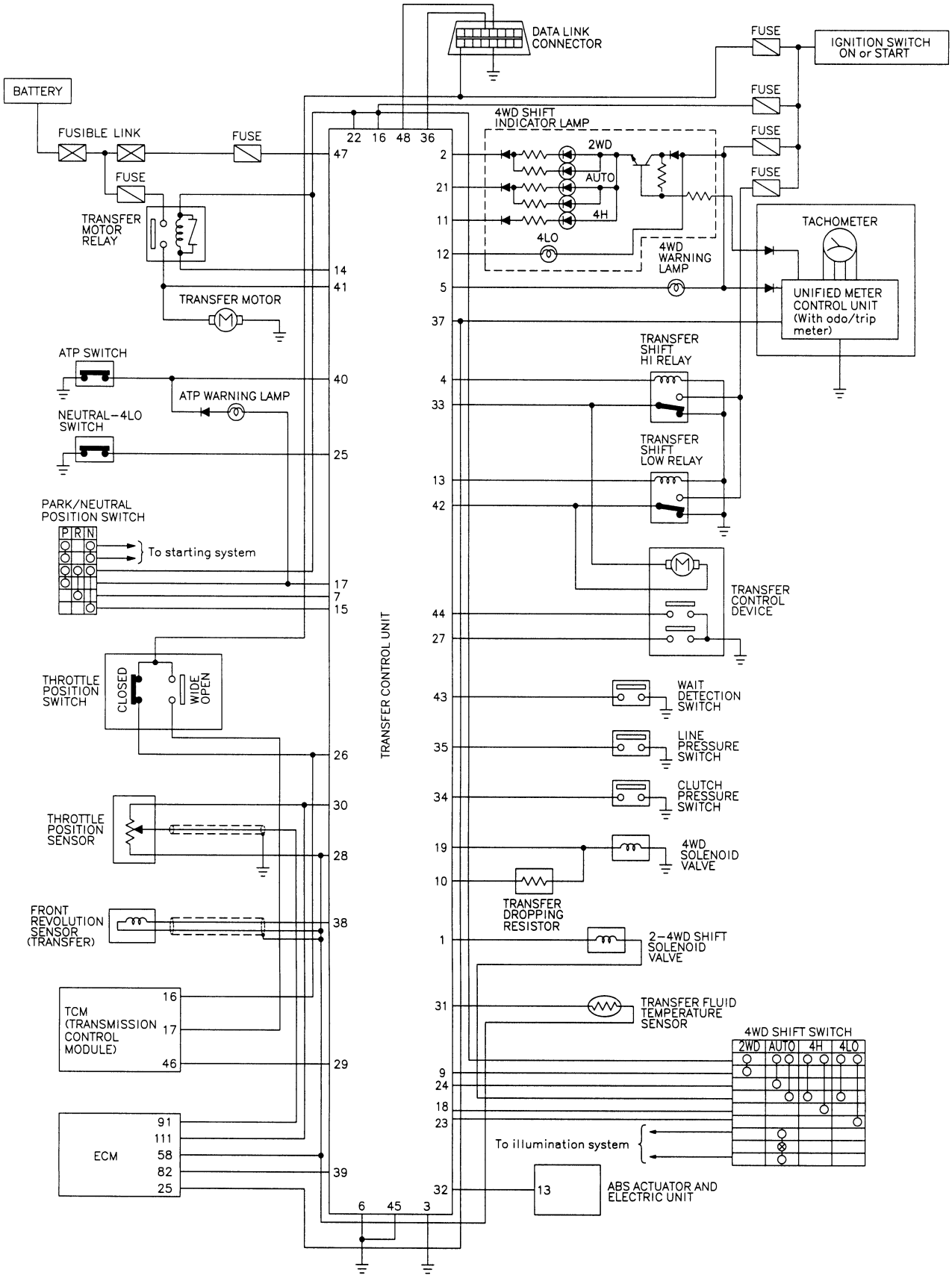

MTF060A

Wiring Diagram — TF —

NBTF0010

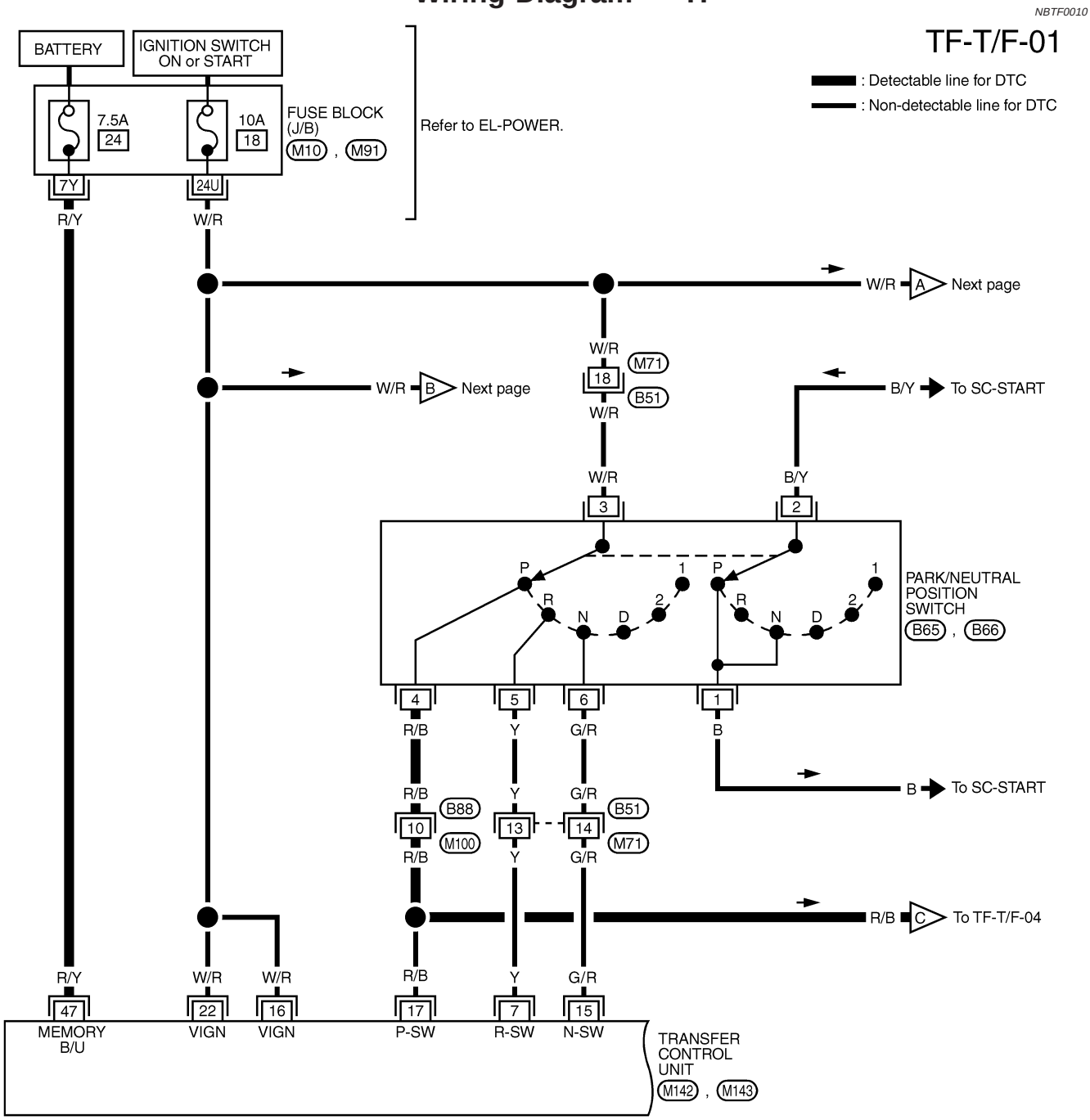

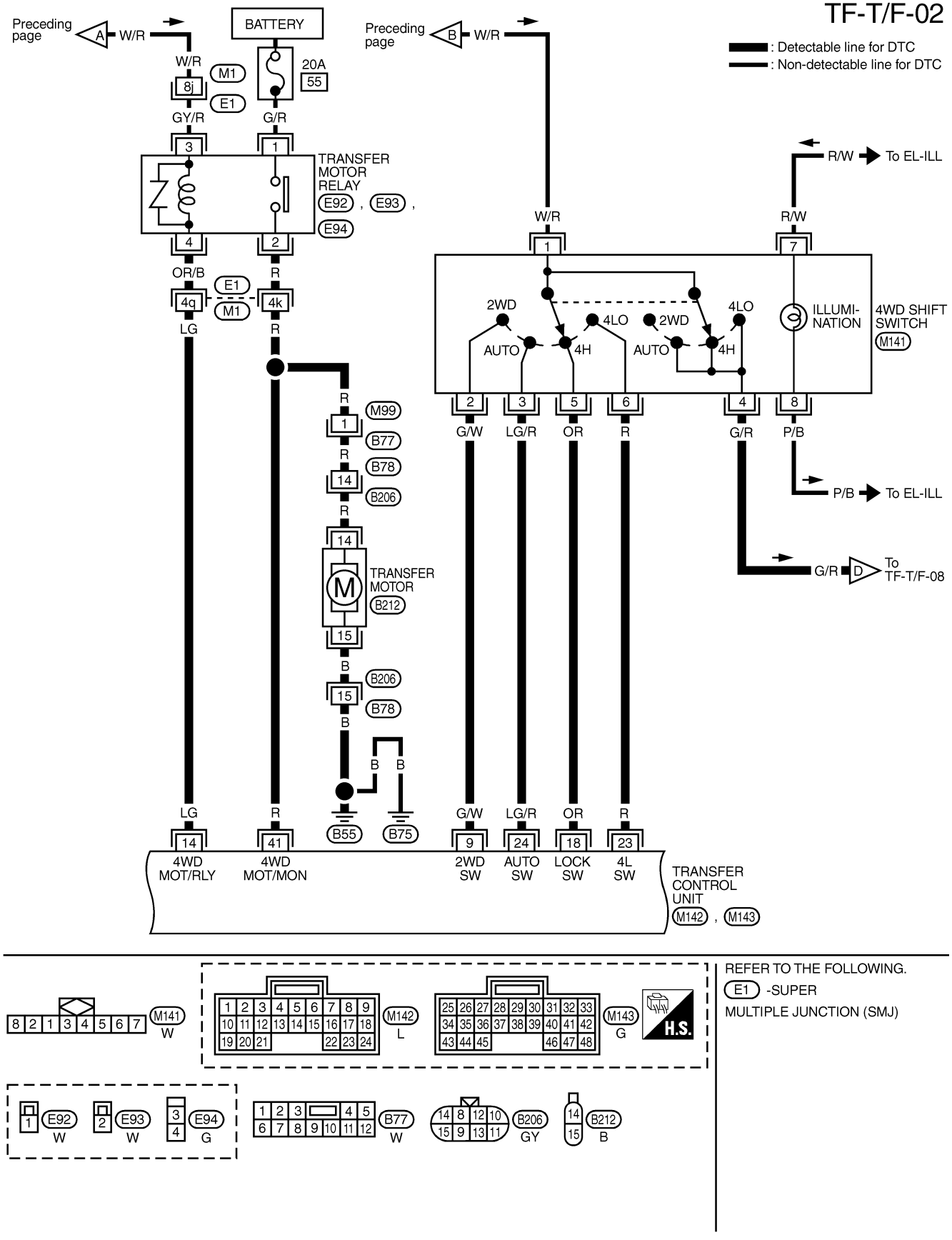
TF-T/F-02
: Detectable line for DTC
: Non-detectable line for DTC
Preceding page
A
W/R
BATTERY
20A
55
M1
E1
8j
GY/R
G/R
TRANSFER MOTOR RELAY
E92
E93
E94
OR/B
R
4q
4k
LG
M99
B77
B78
B206
TRANSFER MOTOR
B212
B55
B75
Preceding page
B
R/W
To EL-ILL
2WD
AUTO
4H
4LO
ILLUMI-NATION
4WD SHIFT SWITCH
M141
G/W
LG/R
OR
G/R
P/B
To EL-ILL
To TF-T/F-08
4WD MOT/RLY
4WD MOT/MON
2WD SW
AUTO SW
LOCK SW
4L SW
TRANSFER CONTROL UNIT
M142
M143
H.S.
REFER TO THE FOLLOWING.
E1 -SUPER MULTIPLE JUNCTION (SMJ)
MTF062A

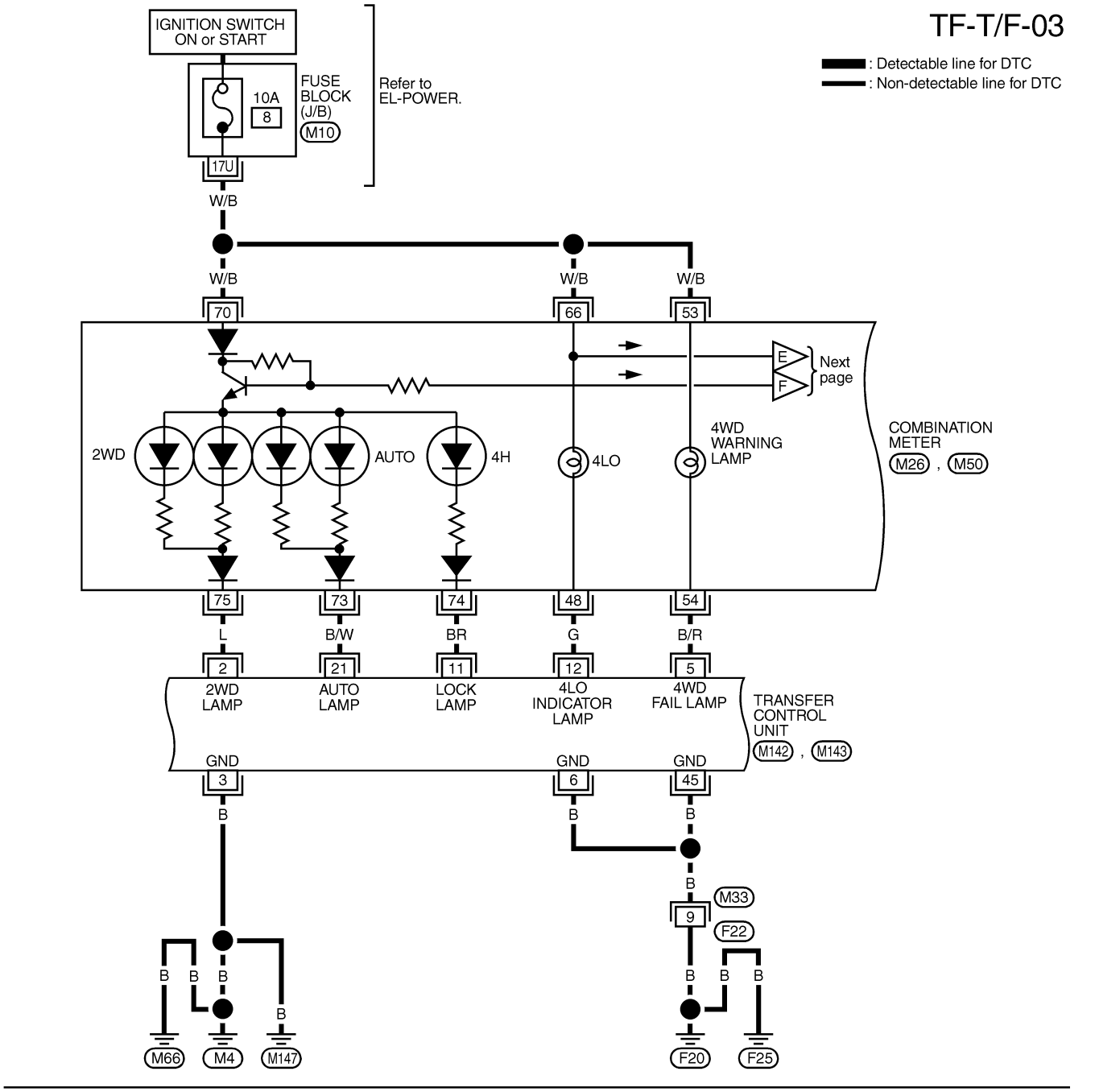

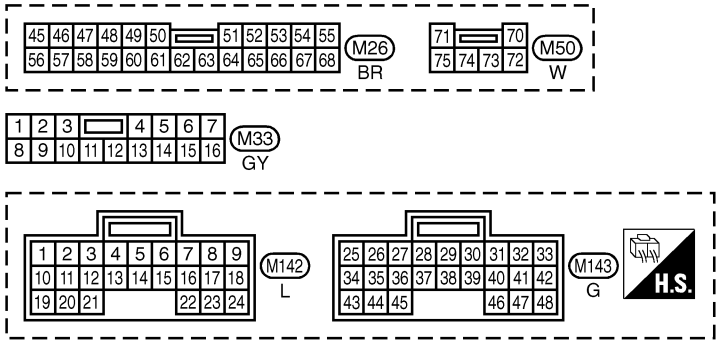

REFER TO THE FOLLOWING.
M10 -FUSE BLOCK-JUNCTION BOX (J/B)

MTF063A

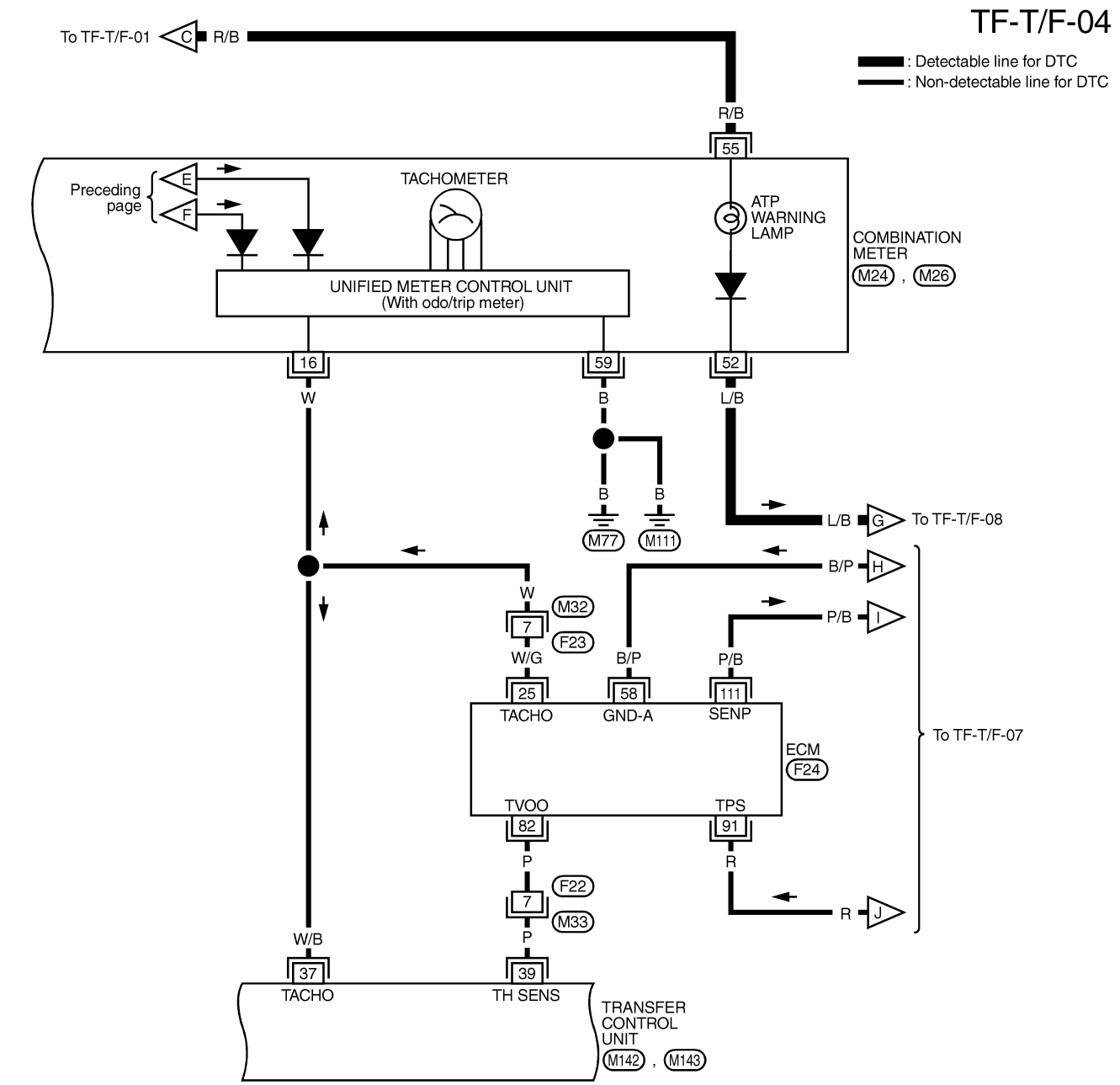

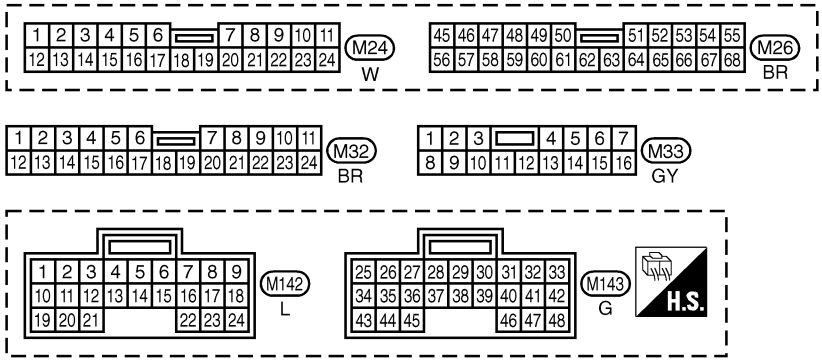

REFER TO THE FOLLOWING.
F24 -ELECTRICAL UNITS

MTF064A

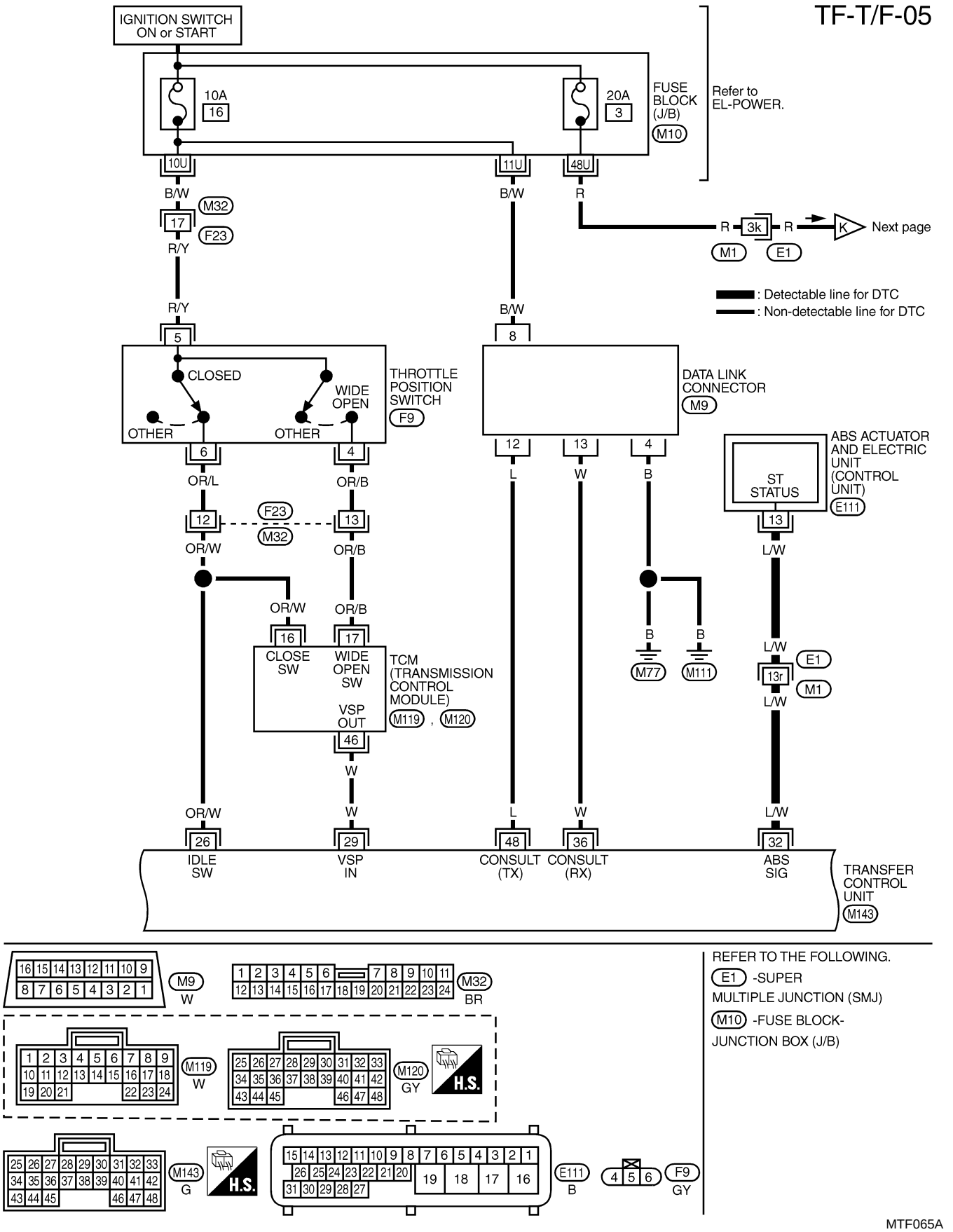
TF-T/F-05
IGNITION SWITCH ON or START
10A 16
20A 3
FUSE BLOCK (J/B) M10
Refer to EL-POWER.
10U
11U
48U
B/W
R
M32
17
F23
R/Y
R 3k R K Next page
M1 E1
: Detectable line for DTC
: Non-detectable line for DTC
5
8
CLOSED
WIDE OPEN
OTHER
OTHER
THROTTLE POSITION SWITCH F9
DATA LINK CONNECTOR M9
6
4
12
13
4
OR/L
OR/B
L
W
B
ABS ACTUATOR AND ELECTRIC UNIT (CONTROL UNIT) E111
ST STATUS
13
L/W
12
13
OR/W
OR/B
OR/W
OR/B
16
17
CLOSE SW
WIDE OPEN SW
VSP OUT
TCM (TRANSMISSION CONTROL MODULE) M119 , M120
46
W
B
B
M77
M111
L/W
13r
E1
M1
L/W
OR/W
W
L
W
L/W
26
29
48
36
32
IDLE SW
VSP IN
CONSULT (TX)
CONSULT (RX)
ABS SIG
TRANSFER CONTROL UNIT M143
M9 W
M32 BR
M119 W
M120 GY
H.S.
M143 G
H.S.
E111 B
F9 GY
REFER TO THE FOLLOWING.
E1 -SUPER MULTIPLE JUNCTION (SMJ)
M10 -FUSE BLOCK-JUNCTION BOX (J/B)
MTF065A

TF-T/F-06

: Detectable line for DTC
: Non-detectable line for DTC

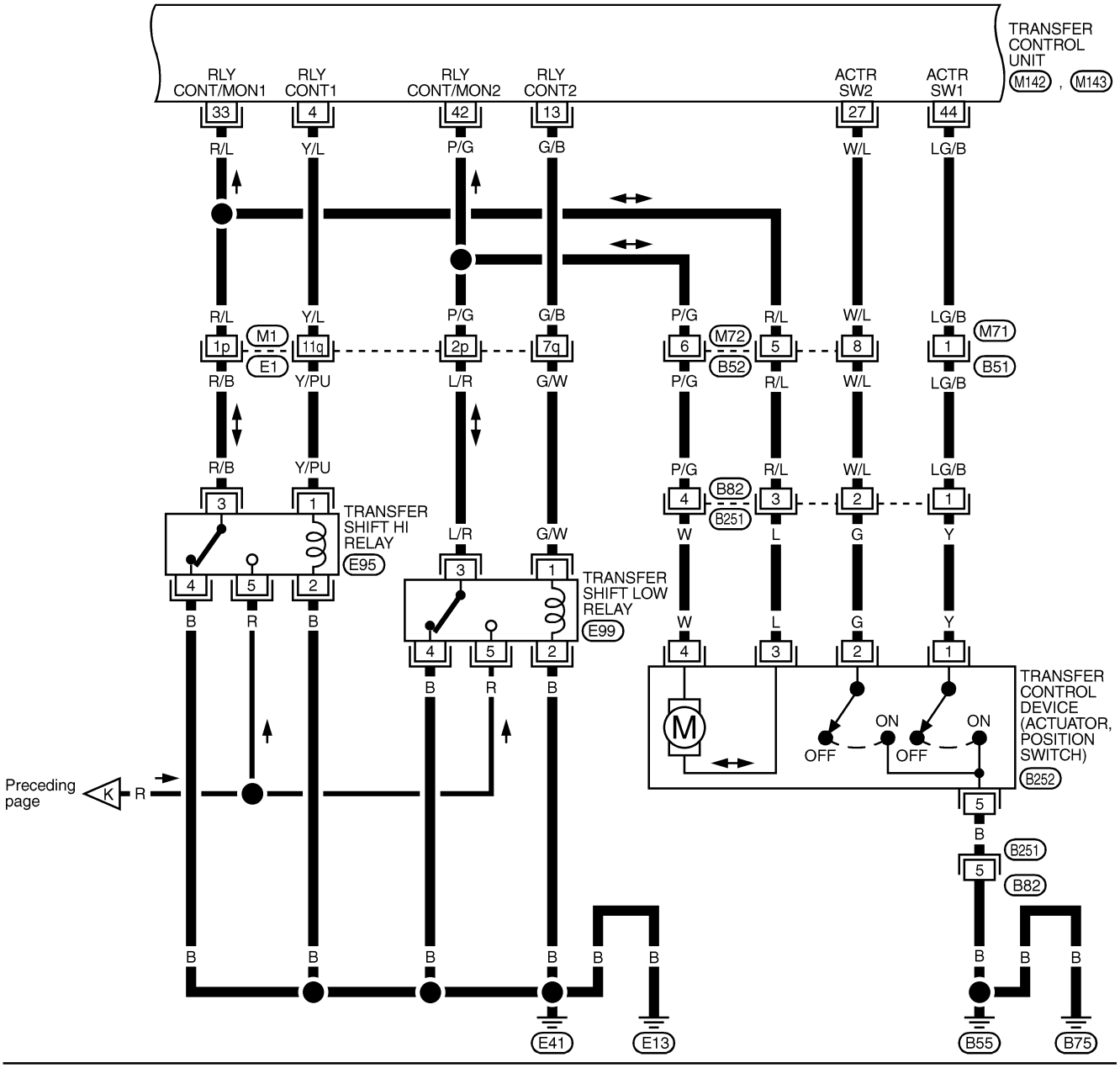

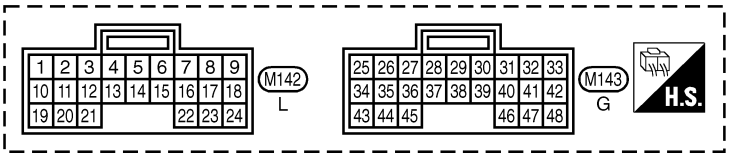

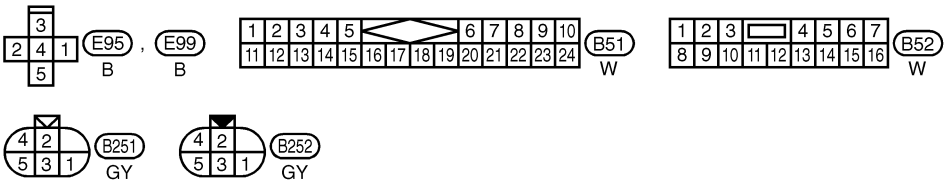

REFER TO THE FOLLOWING.
E1 -SUPER MULTIPLE JUNCTION (SMJ)

MTF066A

: Detectable line for DTC
: Non-detectable line for DTC

TF-T/F-07

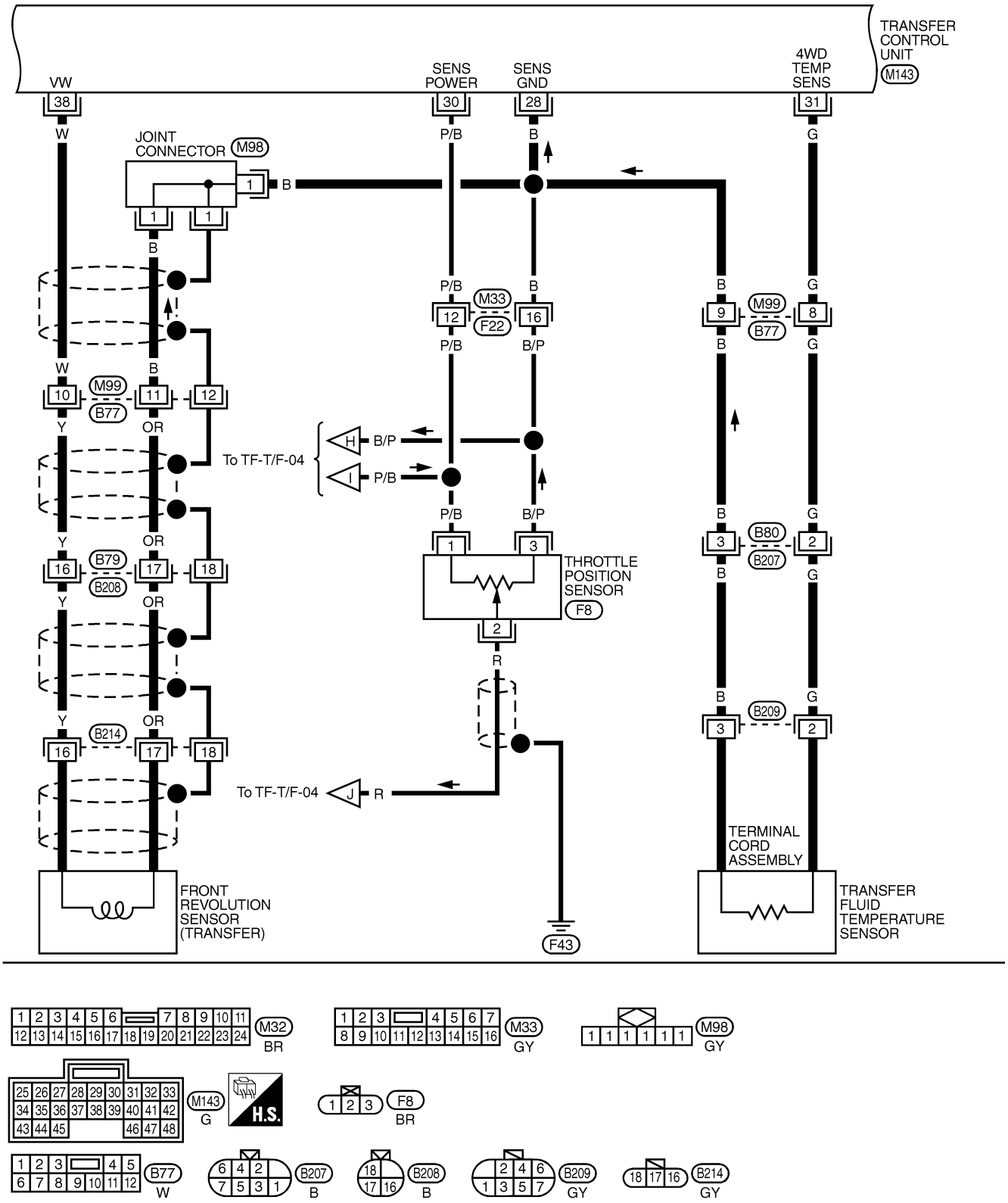

MTF067A

TF-T/F-08

: Detectable line for DTC
: Non-detectable line for DTC

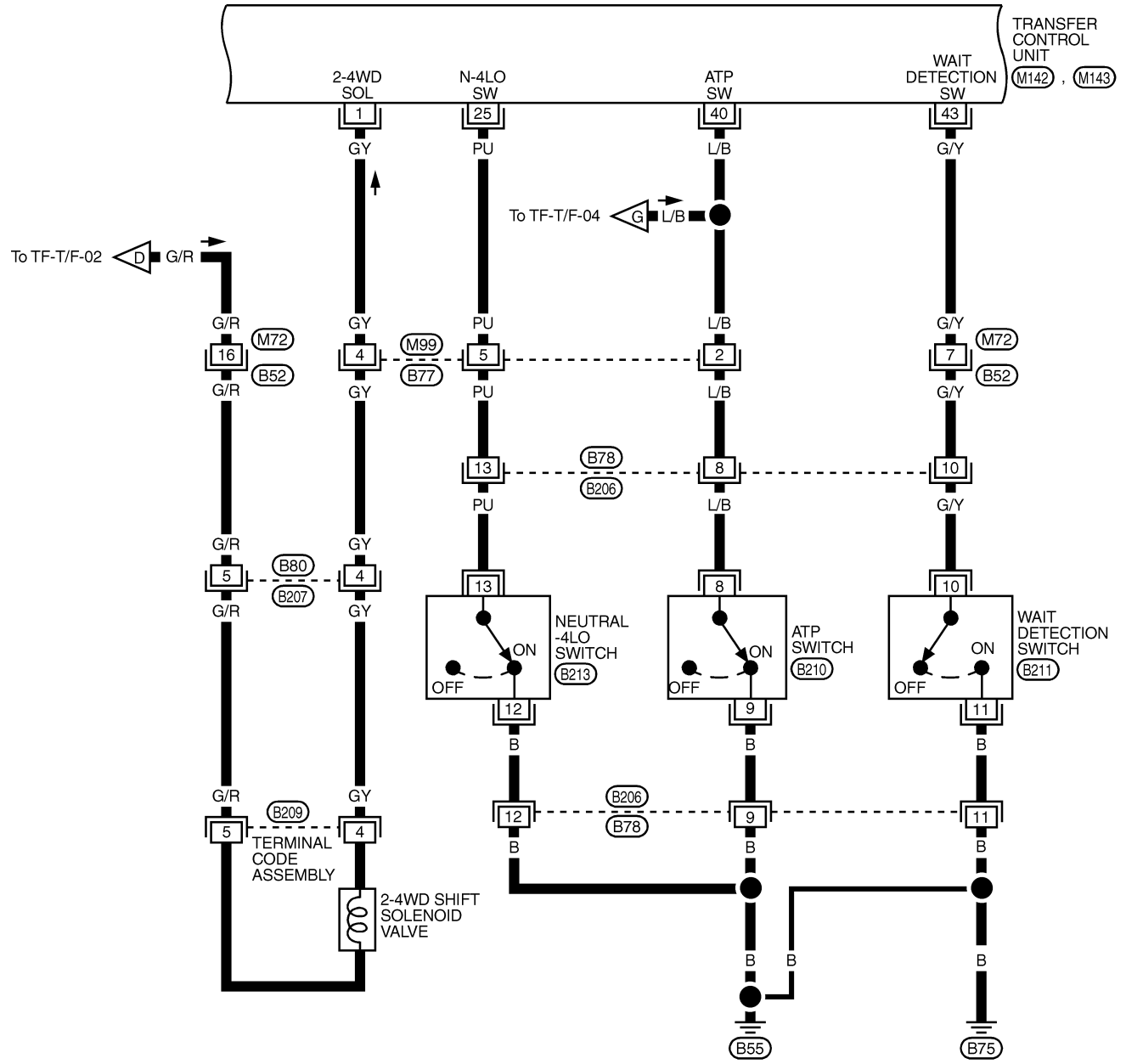

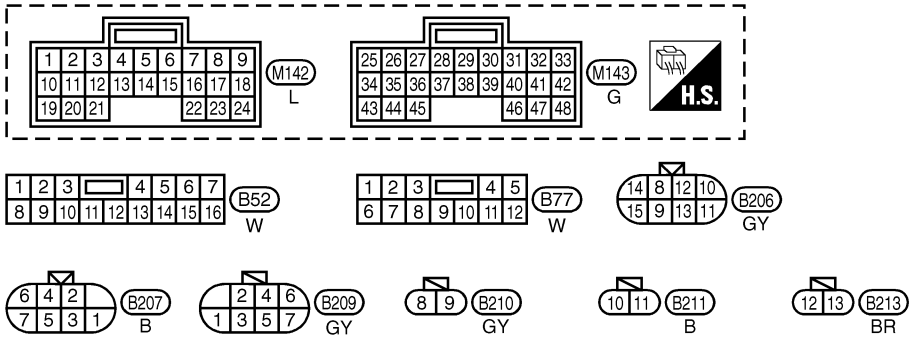

MTF076A

TF-T/F-09

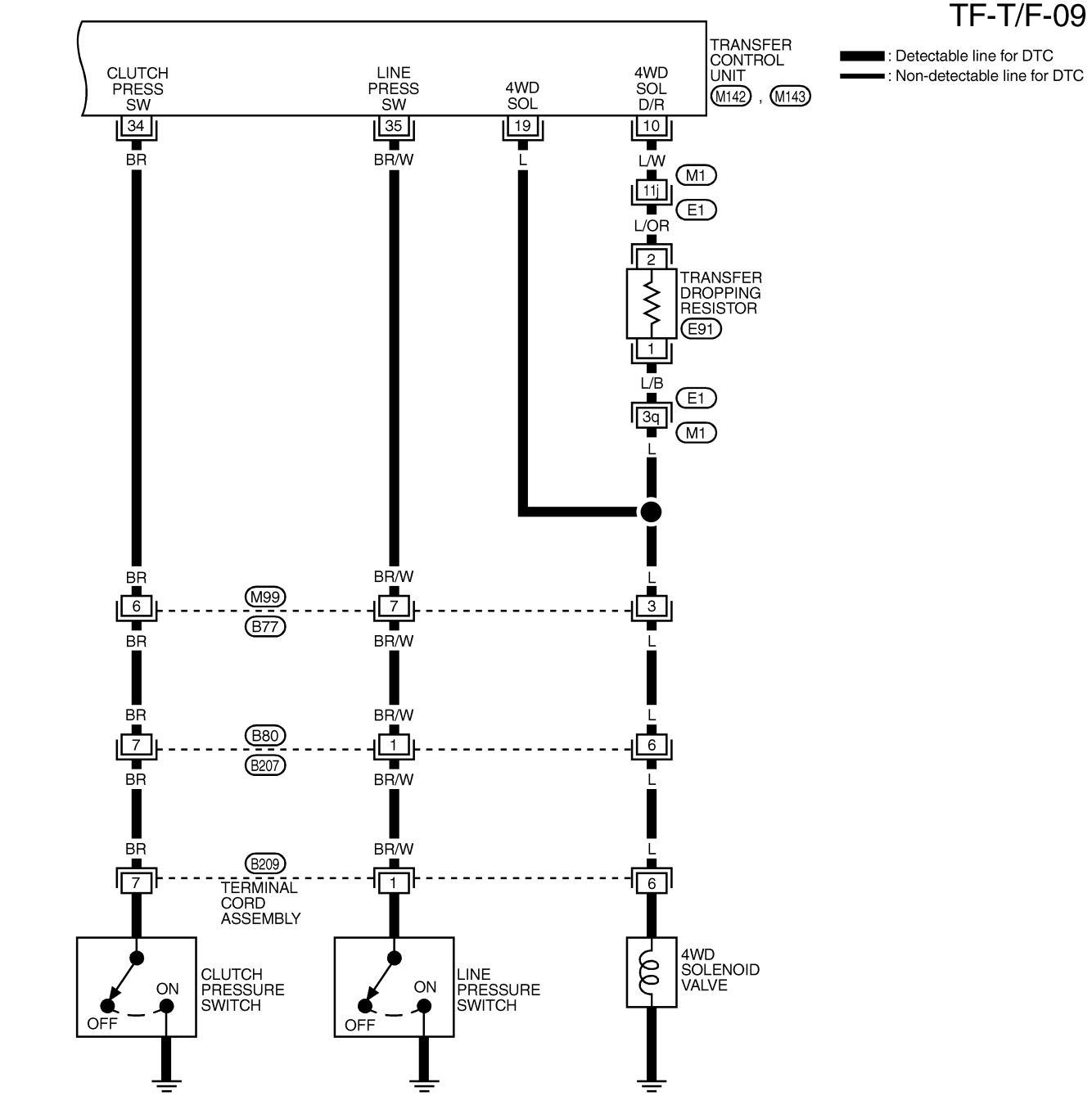

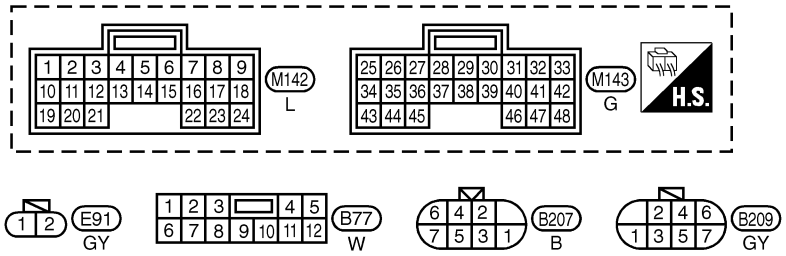

REFER TO THE FOLLOWING.
E1 -SUPER MULTIPLE JUNCTION (SMJ)

MTF068A

Trouble Diagnosis without CONSULT-II

NBTF0011

DESCRIPTION

NBTF0011S01

If the engine starts when there is something wrong with the all-mode 4WD system, the 4WD warning lamp turns ON or flickers in the combination meter. When the system functions properly, the warning lamp turns ON when the ignition switch is turned to “ON”, and it turns OFF after engine starts.
To locate the cause of a problem, start the self-diagnosis function. The 4WD warning lamp in the combination meter will indicate the problem area by flickering according to the self-diagnostic results. As for the details of the 4WD warning lamp flickering patterns, refer to TF-29.

SELF-DIAGNOSTIC PROCEDURE

NBTF0011S02

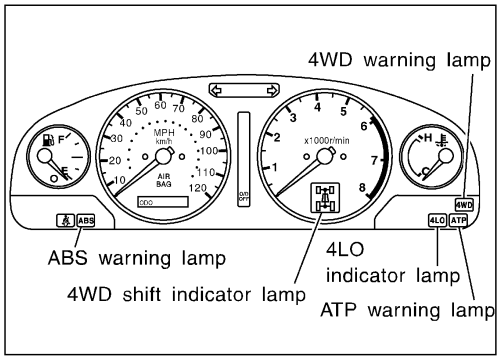

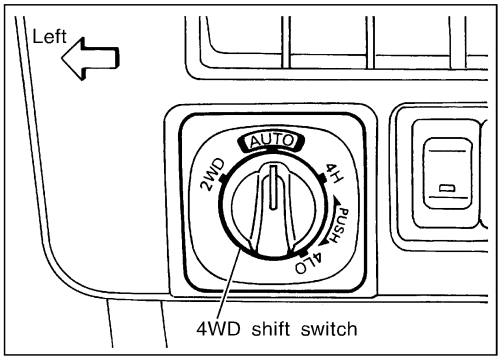

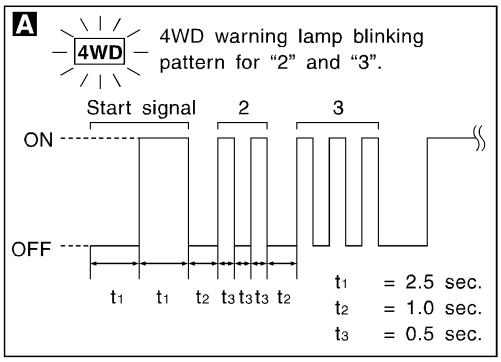

SELF-DIAGNOSIS START

↓

Warm up engine.

↓

Turn ignition switch "ON" and "OFF" at least twice, and then turn ignition switch "OFF".

↓

Move A/T selector lever to "P" position.

↓

Turn 4WD shift switch to "AUTO" position.

↓

Turn ignition switch to "ON" position. (Do not start engine.)

↓

Is 4WD warning lamp ON? — No → Go to SYMPTOM 2. *1

Yes ↓

Move A/T selector lever to "R" position.

↓

Turn 4WD shift switch to "2WD", "AUTO" and "2WD" in order.

↓

Move A/T selector lever to "D" position.

↓

Turn 4WD shift switch to "4H", "AUTO" and "4H" in order.

↓

Move A/T selector lever to "N" position.

↓

Turn 4WD shift switch to "AUTO" position.

↓

Move A/T selector lever to "P" position.

↓

A

Read the flickering of 4WD warning lamp.
Refer to *2.

↓

INSPECTION END

SMT960D

*1: TF-100

*2: TF-29

INDICATIONS OF 4WD WARNING LAMP

NBTF0011S03

Flickering pattern or flickering condition	Malfunction	Check items
1	Front revolution sensor circuit is shorted or open.	Revolution sensor (front) circuit, TF-61.
2	Rear revolution sensor circuit is shorted or open.	Revolution sensor (rear) [Refer to AT-111, "DTC P0720 Vehicle Speed Sensor·A/T (Revolution sensor)".]
3	4WD solenoid valve circuit is shorted or open.	4WD solenoid valve circuit, TF-64.
4	2-4WD shift solenoid valve circuit is shorted or 2WD switch of 4WD shift switch is shorted.	2-4WD shift solenoid valve circuit or 4WD shift switch circuit, TF-66.
5	Transfer motor relay circuit is shorted or open.	Transfer motor relay circuit, TF-70.
8	Power supply voltage of throttle position sensor is improper. Or A/D converter of transfer control unit functions improperly.	Throttle position sensor (Refer to AT-176, "DTC P1705 Throttle Position Sensor".)
9	Transfer fluid temperature sensor circuit is open.	Transfer fluid temperature sensor circuit, TF-73.
10	Neutral-4LO switch circuit is shorted or open.	Neutral-4LO switch circuit, TF-76.
11	2-4WD shift solenoid valve circuit, 2WD switch of 4WD shift switch circuit or clutch pressure switch circuit is shorted or open.	2-4WD shift solenoid valve circuit, 4WD shift switch circuit or clutch pressure switch circuit, TF-66, 80.
12	Line pressure switch circuit is shorted or open.	Line pressure switch circuit, TF-83.
13	Engine speed signal circuit is shorted or open.	Engine speed signal (Refer to AT-116, "DTC P0725 Engine Speed Signal".)
14	Throttle position sensor circuit is shorted or open.	Throttle position sensor (Refer to AT-176, "DTC P1705 Throttle Position Sensor".)
15	Failure in power supply circuit of transfer control unit.	Power supply of transfer control unit
16	4WD shift switch circuit is shorted.	4WD shift switch circuit, TF-66.
17	ABS operation signal circuit is shorted.	ABS operation signal circuit, TF-86.
18	ATP switch, wait detection switch or neutral-4LO switch circuit is shorted or open.	ATP switch, wait detection switch or neutral-4LO switch circuit*, TF-76.
19	Transfer control device actuator motor is faulty. (Abnormalities are detected when actuator motor fails to operate while shifting from "4H" to "4LO" or vice versa.)	Actuator motor and motor circuit, TF-115, 89.
20	Transfer control device actuator motor arm position sensing switch is faulty.	Actuator motor arm position sensing switch and sensing switch circuit, TF-115, 92.
21	Transfer control device actuator circuit is faulty (Abnormalities are detected when motor relay circuit is open/shorted or relay monitor circuit is open/shorted.)	Actuator motor, actuator motor arm position sensing switch and their associated circuits, TF-114, 115 and 94.
Repeats flickering every 2 to 5 sec.	Circuits that the self-diagnosis covers have no malfunction.	—
Repeats flickering every 0.25 sec.	● Power supply failure of memory back-up. ● Battery is disconnected for a long time. ● Battery performance is poor.	Data erase/display circuit, TF-88.

Flickering pattern or flickering condition	Malfunction	Check items
No flickering	PNP switch or 4WD shift switch circuit is shorted or open.	PNP switch (Refer to AT-99, "DTC P0705 Park/Neutral Position Switch".) or 4WD shift switch circuit, TF-66.

*: If revolution sensor malfunction is simultaneously detected, check revolution sensor first.

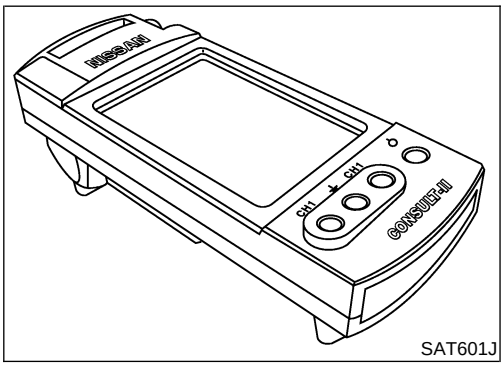

SAT601J

Trouble Diagnosis with CONSULT-II

NBTF0012

SELF-DIAGNOSIS

NBTF0012S01

CONSULT-II Setting Procedure

NBTF0012S0101

1. Turn ignition switch to "OFF" position.

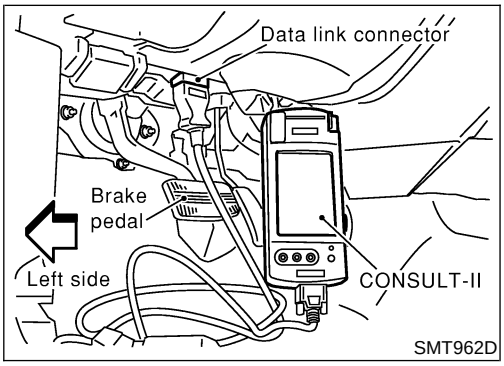

SMT962D

2. Connect CONSULT-II to data link connector which is located in instrument lower panel on driver side.

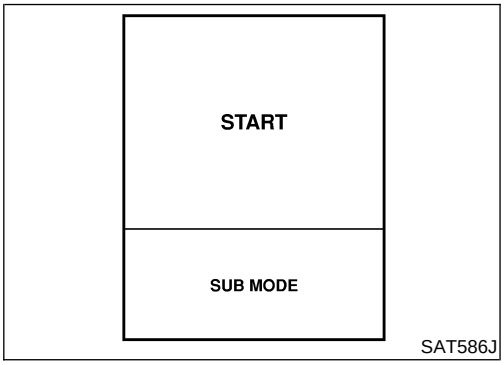

SAT586J

3. Start engine.
4. On CONSULT-II screen, touch "START".

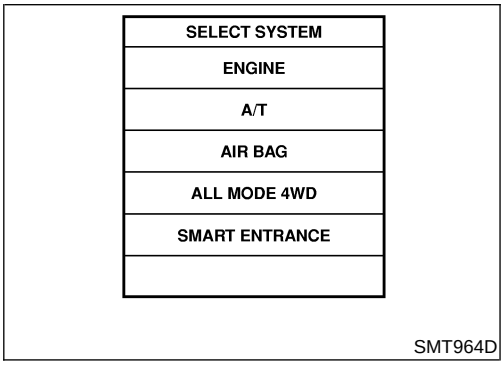

SMT964D

5. Touch "ALL MODE 4WD" on SELECT SYSTEM screen.

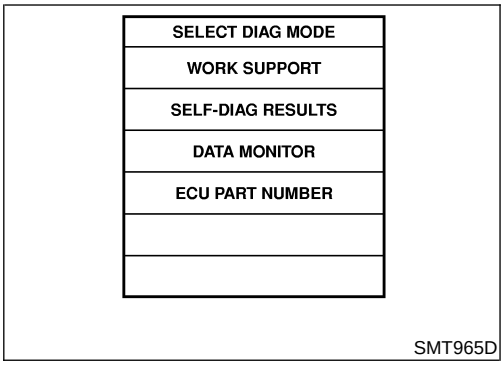

6. Touch "SELF-DIAG RESULTS" on SELECT DIAG MODE screen.

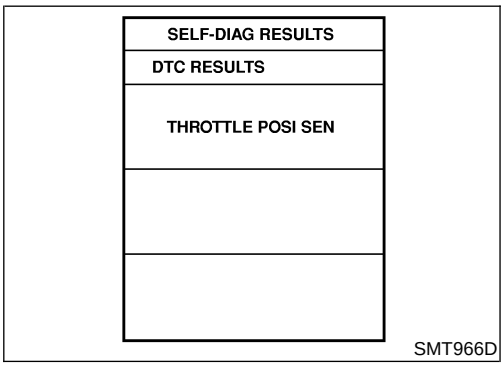

7. Self-diagnostic results are displayed.

SELF-DIAGNOSTIC ITEMS

NBTF0012S02

Detected items (Screen terms for CONSULT-II, "SELF-DIAG RESULT" mode)	Malfunction is detected when...	Check items
Revolution sensor (front) (Note 3) (VHCL SPEED SEN·FR)	• Front revolution sensor (installed on T/F) signal is not input due to open circuit. • Improper signal is input while driving.	Revolution sensor (front) circuit, TF-61.
Revolution sensor (rear) (VHCL SPEED SEN·RR)	• Signal from vehicle speed sensor 1 (installed on A/T) is not input due to open circuit. • Improper signal is input while driving.	Revolution sensor (rear) [Refer to AT-111, "DTC P0720 Vehicle Speed Sensor·A/T (Revolution sensor)".]
4WD solenoid valve (DUTY SOLENOID)	• Proper voltage is not applied to solenoid valve due to open or short circuit.	4WD solenoid valve, TF-64.
2-4WD shift solenoid valve (2-4WD SOLENOID)		2-4WD shift solenoid valve or 4WD shift switch circuit, TF-66.
Transfer motor relay (MOTOR RELAY)	• Motor does not operate properly due to open or short circuit in transfer motor or motor relay.	Transfer motor relay circuit, TF-70.
Transfer fluid temperature sensor (FLUID TEMP SENSOR)	• Signal voltage from fluid temperature sensor is abnormally high (T/F fluid temperature is abnormally low) while driving.	Transfer fluid temperature sensor circuit, TF-73.
Neutral-4LO switch (N POSI SW TF)	• Improper signal is input while driving.	Neutral-4LO switch, TF-76.
Clutch pressure (CLUTCH PRESSURE)	• Improper signal is input due to open or short circuit. • Malfunction occurs in clutch pressure hydraulic circuit.	Clutch pressure switch circuit (*1), TF-80.
Line pressure (LINE PRESSURE)	• Improper signal is input due to open or short circuit. • Malfunction occurs in line pressure hydraulic circuit.	Line pressure switch circuit (*1), TF-83.
Engine speed signal (Note 1) (ENGINE SPEED SIG)	• Engine speed is abnormally low while driving.	Engine speed signal (Refer to AT-116, "DTC P0725 Engine Speed Signal".)

Detected items (Screen terms for CONSULT-II, "SELF-DIAG RESULT" mode)	Malfunction is detected when...	Check items
Throttle position sensor (THRTL POSI SEN)	• Signal voltage from throttle position sensor is abnormally high. • Signal voltage from throttle position sensor is abnormally low when closed throttle position switch is OFF.	Throttle position sensor (Refer to AT-176, "DTC P1705 Throttle Position Sensor".)
Transfer control unit (ADC) C/U (ADC)/THRTL SEN	• Power supply voltage for throttle position sensor is improper or A/D converter system of transfer control unit is faulty.	Throttle position sensor (Refer to AT-176, "DTC P1705 Throttle Position Sensor".)
Battery voltage (Note 1) (BATTERY VOLTAGE)	• Power supply voltage for transfer control unit is abnormally low while driving.	Power supply circuit (Refer to AT-96, "Wiring Diagram — AT — MAIN".)
4WD shift switch (4WD MODE SW)	• More than two switch inputs are simultaneously detected due to short circuit of 4WD shift switch.	4WD shift switch circuit, TF-66.
ABS operation signal (Note 4) (ABS OPER SIGNAL)	• When a malfunction signal due to disconnection or shorting is detected. • When a defect signal is entered from the ABS control unit.	ABS operation signal circuit, TF-86.
Wait detection switch (Note 2) (WAIT DETECT SWITCH)	• Improper signal is input due to open or short circuit.	ATP switch, wait detection switch and neutral-4LO switch circuits (*2), TF-76.
Shift actuator abnormal (SHIFT ACT)	Transfer control device actuator motor is faulty. (Abnormalities are detected when actuator motor fails to operate while shifting from "4H" to "4LO" or vice versa.)	Actuator motor and motor circuit, TF-115, 89.
Shift actuator position switch abnormal (SHIFT ACT P/S)	Transfer control device actuator motor arm position sensing switch is faulty.	Actuator motor arm position sensing switch and sensing switch circuit, TF-115, 92.
Shift actuator circuit abnormal (SHIFT ACT CIR)	Transfer control device actuator circuit is faulty (Abnormalities are detected when motor relay circuit is open/shorted or relay monitor circuit is open/shorted.)	Actuator motor, actuator motor arm position sensing switch and their associated circuits, TF-114, 115 and 94.
Memory power supply stop	• Due to removal of battery which cuts off power supply to transfer control unit, self-diagnosis memory function is suspended.	Data erase/display circuit, TF-88.
Transfer control unit (RAM) [CONTROL UNIT (RAM)]	• Failure is detected in the memory (RAM) system of transfer control unit.	
Transfer control unit (ROM) [CONTROL UNIT (ROM)]	• Failure is detected in the memory (ROM) system of transfer control unit.	
Transfer control unit (EEPROM) [CONTROL UNIT (EEPROM)]	• Failure is detected in the memory (EEPROM) system of transfer control unit.	

Note 1: When a malfunction occurs, it is only displayed and not stored in the memory.

Note 2: When the wait detection switch has been properly fixed, malfunction information is erased from the memory.

Note 3: If 4WD shift switch is left between 4H and 4LO for a while, this indication may be displayed.

(*1): If the malfunction is detected only while driving in reverse, check the continuity of "R" position on A/T PNP switch. When there is nothing wrong with the electrical system, check the hydraulic system.

(*2): If a revolution sensor malfunction is detected at the same time, check the revolution sensor circuit first.

Note 4: When this malfunction is detected with the ABS warning lamp off, first check for disconnection or shorting in the harness between the transfer control unit and the ABS control unit.

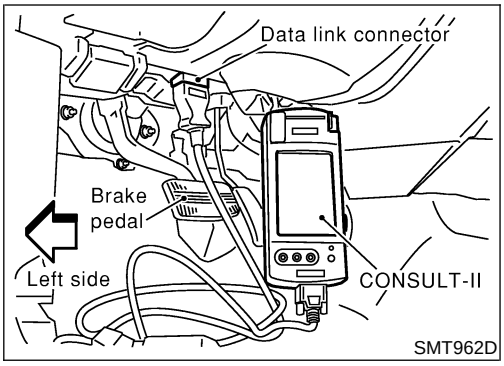

SMT962D

DATA MONITOR

NBTF0012S03

CONSULT-II Setting Procedure

NBTF0012S0301

1. Turn ignition switch to "OFF" position.
2. Connect CONSULT-II to data link connector, which is located in instrument lower panel on driver side.
3. Turn ignition switch to "ON" position.
4. Touch "START".

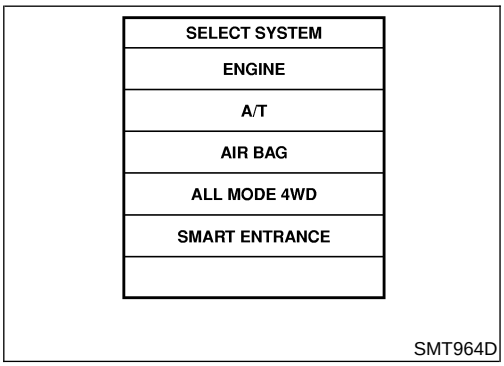

SMT964D

5. Touch "ALL MODE 4WD".

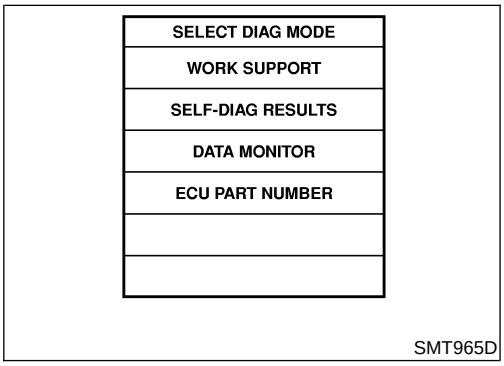

SMT965D

6. Touch "DATA MONITOR".

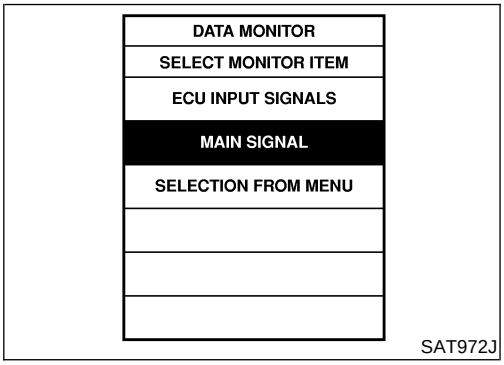

SAT972J

7. Touch "ECU INPUT SIGNALS" or "MAIN SIGNALS".
8. Select "Numerical Display", "Bar Chart Display" or "Line Graph Display".
9. Touch "SETTING" to set record conditions.

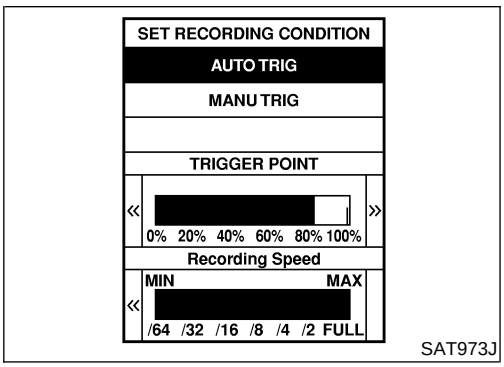

SAT973J

10. Touch "AUTO TRIG" or "MANU TRIG".
11. Return to "SELECT MONITOR ITEM" on "DATA MONITOR" screen and touch "START".

DATA MONITOR	
MONITOR	NO DTC
4WD MODE	2WD
COMP CL TORQ	0.0 kgm
DUTY SOLENOID	4 %
2-4WD SOL	OFF
VHCL/S COMP	0 km/h
THROTTLE POSI	0.0 /8
MOTOR RELAY	OFF
4WD FAIL LAMP	OFF
SHIFT ACT 1	OFF

SMT963D

12. Monitored data are displayed.

DATA MONITOR ITEMS

NBTF0012S04

○: Standard ▼: Option

Item [Unit]	Monitor item			Remarks
	ECU input signals	Main signals	Item menu selection	
Revolution sensor-front [km/h (MPH)]	○		▼	Revolution sensor installed on T/F
Revolution sensor-rear [km/h (MPH)]	○		▼	Vehicle speed sensor·A/T
Engine speed [rpm]	○		▼	
Throttle position sensor [V]	○		▼	
Transfer fluid temperature sensor [V]	○		▼	
Battery voltage [V]	○		▼	
2WD switch [ON-OFF]	○		▼	2WD switch of 4WD shift switch
AUTO switch [ON-OFF]	○		▼	AUTO switch of 4WD shift switch
Lock switch [ON-OFF]	○		▼	4H switch of 4WD shift switch
4L switch [ON-OFF]	○		▼	4LO switch of 4WD shift switch
N position switch TF [ON-OFF]	○		▼	N position switch of transfer
Line pressure switch [ON-OFF]	○		▼	Line pressure switch
Clutch pressure switch [ON-OFF]	○		▼	Clutch pressure switch
ATP switch [ON-OFF]	○		▼	
N position switch [ON-OFF]	○		▼	"N" position on A/T PNP switch
R position switch [ON-OFF]	○		▼	"R" position on A/T PNP switch
P position switch [ON-OFF]	○		▼	"P" position on A/T PNP switch
Closed throttle position switch [ON/OFF]	○		▼	Idle contact of throttle position switch
ABS operation switch [ON-OFF]	○		▼	ABS operation switch
Wait detection switch [ON-OFF]	○		▼	
Throttle opening		○	▼	Throttle opening recognized by transfer control unit
4WD-mode		○	▼	4WD-mode recognized by transfer control unit (2W, AUTO, 4H & 4LO)
Vehicle speed comp [km/h (MPH)]		○	▼	Vehicle speed recognized by transfer control unit
*Control torque [N·m (kg-m, ft-lb)]		○	▼	Calculated torque recognized by transfer control unit

Item [Unit]	Monitor item			Remarks
	ECU input signals	Main signals	Item menu selection	
Duty solenoid valve [%] (Transfer 4WD solenoid valve)		○	▼	
2-4WD shift solenoid valve [ON-OFF]		○	▼	Control signal outputs of transfer control unit
Transfer motor relay [ON-OFF]		○	▼	
Shift activating 1 [ON-OFF]		○	▼	
Shift activating 2 [ON-OFF]		○	▼	
2-4WD shift solenoid valve monitor [ON-OFF]			▼	Check signal (re-input signal) of transfer control unit control signal output is displayed. If circuit is shorted or open, ON/OFF state does not change.
Transfer motor relay monitor [ON-OFF]			▼	
Shift activating monitor 1 [ON-OFF]			▼	
Shift activating monitor 2 [ON-OFF]			▼	
4WD fail lamp [ON-OFF]		○	▼	Transfer control unit control signal output for 4WD warning lamp (left)
Shift position switch 1 [ON-OFF]	○		▼	
Shift position switch 2 [ON-OFF]	○		▼	
2WD indicator lamp [ON-OFF]			▼	Transfer control unit control signal output for 4WD shift indicator lamp (rear)
AUTO indicator lamp [ON-OFF]			▼	Transfer control unit control signal output for 4WD shift indicator lamp (front & rear)
LOCK indicator lamp [ON-OFF]			▼	Transfer control unit control signal output for 4WD shift indicator lamp (center)
4LO indicator lamp [ON-OFF]			▼	Transfer control unit control signal output for 4WD shift indicator lamp (right)
Offset at starting			▼	Appears on monitor but does not function.
Clutch limit [N·m (kg-m, ft-lb)]			▼	Clutch force release limit value set in WORK SUPPORT
Voltage [V]			▼	Value measured by voltage probe is displayed.
Frequency [Hz]			▼	Value measured by pulse probe is displayed. If measurement is impossible, "#" sign is displayed. "#" sign is also displayed at the final data value until the measurement result is obtained.
DUTY-HI			▼	Duty cycle value for measurement probe is displayed.
DUTY-LOW			▼	
PLS WIDTH-HI			▼	Measured pulse width of measurement probe is displayed.
PLS WIDTH-LOW			▼	

*: This item is indicated as "COMP CL TORQ".

REFERENCE VALUE IN DATA MONITOR MODE

NBTF0012S09

Indicated items (Screen terms for CONSULT, "DATA MONITOR" mode)	Display	Conditions
Throttle position sensor (THRTL POS SEN)	Approx. 0.5 - 4.0V	Throttle valve fully closed to fully open
Transfer fluid temperature sensor (FLUID TEMP SE)	Approx. 1.5 - 0.5V	Transfer fluid temperature approx. 20 - 80°C (68 - 176°F)
Closed throttle position switch (CLOSED THL/SW)	ON	After engine warm-up, accelerator pedal is released.
	OFF	After engine warm-up, accelerator pedal is depressed.
ABS operation switch (ABS OPER SW)	OFF	ABS is not operating.
	ON	ABS is operating.
ABS control operation (ABS CONT OPER)	ON	ABS OPER SW is "ON". Control operation is accomplished in combination with ABS.
	OFF	ABS is not operating. When a message such as "improper ABS operation signal" appears on the display and ABS OPER SW is "ON", control operation is not accomplished in combination with ABS.
2WD position (2WD SW)	ON	4WD shift switch is in "2WD".
	OFF	Except the above condition
Lock position (LOCK SWITCH)	ON	4WD shift switch is in "4H".
	OFF	Except the above condition

Neutral-4LO switch (N POSI SW TF) ATP switch (ATP SWITCH) Wait detection switch (WAIT DETCT SW)				
4WD shift switch position	2WD, AUTO, 4H	(N)	4LO	
ATP switch	OFF	ON	OFF	
Neutral-4LO switch	OFF	ON		
Wait detection switch	OFF	ON		
	See Note.			
Note: When shifting from "4LO" to "2WD", "AUTO", "4H", it turns ON when "Wait" function is operating (and it turns OFF when "Wait" function is canceled).				

Transfer motor relay (MOTOR RELAY)	Throttle valve	4WD shift switch	A/T selector lever	Motor relay	Remarks
	Fully closed	2WD	—	OFF	
		AUTO, 4LO	P, N	OFF	ON for approx. 2 sec. after shifting to "P" and "N"
			Others	ON	
		4H	P	OFF	ON for approx. 2 sec. after shifting to "P"
			Others	ON	

Line pressure switch (LINE PRES SW)	Conditions
OFF	The vehicle has been left at room temperature for 5 minutes and more with ignition switch in "OFF" position.
ON	Ignition switch in "ON", and 4WD shift switch in "AUTO" or "4H" and A/T selector lever in "D".

Indicated items (Screen terms for CONSULT, "DATA MONITOR" mode)	Display	Conditions	
Clutch pressure switch (CL PRES SW)	OFF	Ignition switch in "ON", and 4WD shift switch in "2WD". ("Wait" function is not operating.)	
	ON	Ignition switch in "ON", and 4WD shift switch in "AUTO" or "4H" and A/T selector lever in "D". ("Wait" function is not operating.)	
Control torque (COMP CL TORQ)	0 kg-m	4WD shift switch ("Wait" function is not operating.)	In "2WD" position
	39 - 1,079 N·m (4 - 110 kg-m, 29 - 796 ft-lb)		In "AUTO" position
	1,079 N·m (110 kg-m, 796 ft-lb)		In "4H" or "4LO" position
4WD solenoid (DUTY SOLENOID)	4%		In "2WD" position
	94 - 4%		In "AUTO" position
	4%		In "4H" or "4LO" position
2-4WD shift solenoid valve (2-4WD SOL)	OFF	4WD shift switch	In "2WD" position
	ON ("Wait" function is not operating.)		In "AUTO" position
	OFF ("Wait" function is operating.)		
	ON ("Wait" function is not operating.)		In "4H" position
	OFF ("Wait" function is operating.)		
	ON		In "4LO" position

Indicated items	Display	Conditions
Battery voltage	Approx. 12V	Key switch "ON" and engine at rest
	Approx. 13 - 14V	During idling
AUTO switch	OFF	4WD shift switch in other than "AUTO" position
	ON	4WD shift switch in "AUTO" position
4L switch	OFF	4WD shift switch in other than "4LO" position
	ON	4WD shift switch in "4LO" position
N position switch	OFF	A/T selector lever in other than "N" position
	ON	A/T selector lever in "N" position
R position swtich	OFF	A/T selector lever in other than "R" position
	ON	A/T selector lever in "R" position
P position switch	OFF	A/T selector lever in other than "P" position
	ON	A/T selector lever in "P" position
Throttle opening	0.0/8 - 8.0/8	Throttle fully closed (0.0/8) or throttle fully open (8.0/8)

Indicated items	Display	Conditions	
4WD-mode	2WD	4WD shift switch	In "2WD" position
	AUTO		In "AUTO" position
	LOCK		In "4H" position
	4L		In "4LO" position
Front wheel speed	0 - 255 km/h (0 - 158 MPH)	0 km/h (vehicle at standstill)	
Rear wheel speed	0 - 255 km/h (0 - 158 MPH)	0 km/h (vehicle at standstill)	
Shift ACTR operating 1, Shift activating monitor 1	OFF	During normal operation	
	ON	During shifts from "4H" to "4LO" position	
Shift ACTR operating 2, Shift activating monitor 2	OFF	During normal operation	
	ON	During shifts from "4LO" to "4H" position	
4WD fail lamp	OFF	During normal operation	
	ON	During 2-second period (after key switch turned to "ON") or when system is out of order	
Shift ACTR position sensing switch 1	OFF	4WD shift switch is in a position other than "4LO".	
	ON	4WD shift switch in "4LO" position	
Shift ACTR position sensing switch 2	OFF	4WD shift switch in "4LO" position	
	ON	4WD shift switch is in a position other than "4LO".	
2WD indicator lamp	OFF	Engine at rest or system out of order	
	ON	Except the above condition	
AUTO indicator lamp	OFF	Engine at rest during 2WD-mode operation or system out of order	
	ON	4WD shift switch in "4LO" or "4H" position and A/T selector lever in "AUTO" position	
LOCK indicator lamp	OFF	Engine at rest and A/T selector lever in "AUTO" position during 2WD-mode operation or system out of order	
	ON	4WD shift switch in "4H" or "4LO" position	
4L indicator lamp	OFF	Engine at rest and A/T selector lever in "AUTO" position during 2WD-mode operation or system out of order	
	ON	4WD shift switch in "4LO" position	

WORK SUPPORT

NBTF0012S06

Purpose

NBTF0012S0601

When there is no problem with transfer and 4WD system, following symptoms in "AUTO" mode may be claimed by a customer.

- Tight corner braking symptom after accelerator (throttle) opening (Note 1)
- Vibration when accelerating on a low μ road (snow-covered or icy road) (Note 2)
  It is possible to deal with these symptoms by changing "CLUTCH FORCE RELEASE LIMIT VALUE". However, be careful when changing the values because it may adversely affect driving performance.

NOTE:

1) When the accelerator is slightly open (approx. 1/8) or fully closed after being opened. The tight corner braking symptom during idle creep driving with accelerator fully closed cannot be

solved by this method. Refer to SYMPTOM 8, TF-108.

2) A slight shock is felt at a few hertz as if it were being pushed lightly from behind.

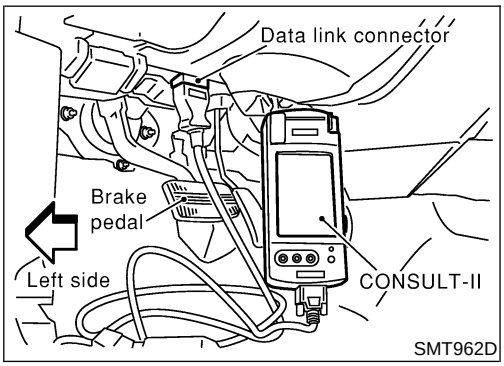

SMT962D

CONSULT-II Setting Procedure

NBTF0012S0602

1. Turn ignition switch to "OFF" position.
2. Connect CONSULT-II to data link connector, which is located in instrument lower panel on driver side.
3. Turn ignition switch to "ON" position.
4. Touch "START".
5. Touch "ALL MODE 4WD".

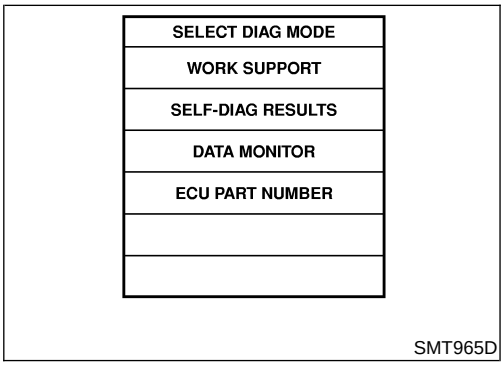

SMT965D

6. Touch "WORK SUPPORT".

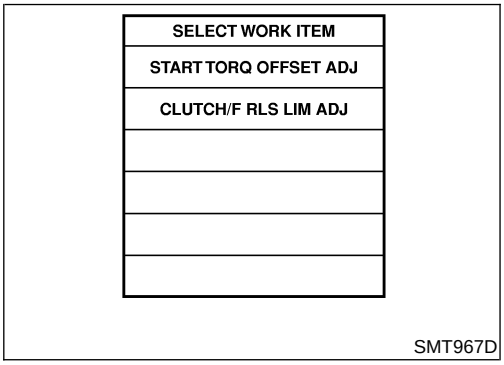

SMT967D

7. Select WORK ITEM by touching "CLUTCH/F RLS LIM ADJ".

NOTE:
"START TORQ OFFSET ADJ" is displayed, but the transfer does not have this function.

CLUTCH FORCE RELEASE LIMIT ADJUSTMENT

NBTF0012S07

1.2 kg-m: Tight corner braking symptom is alleviated. However, vibration may occur when accelerating on a low μ road (icy road, etc.).
0.3 kg-m: Initial set value
0.2 kg-m: Do not set to this value because the tight corner braking symptom will get worse.

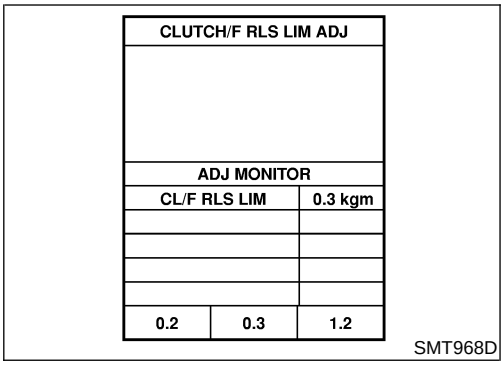

1. Current CLUTCH FORCE RELEASE LIMIT value "0.3 kg-m" appears under "CONDITION SETTING" on CONSULT-II display.
2. Touch "1.2" on the display.

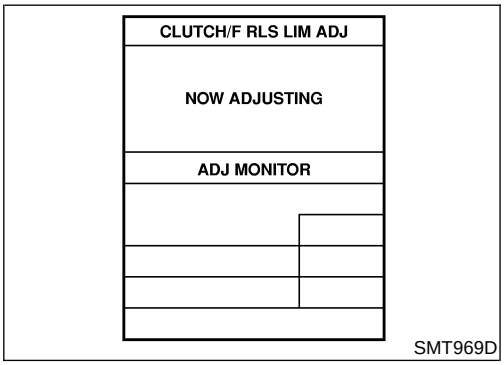

3. Display changes to "NOW ADJUSTING" in a short time.

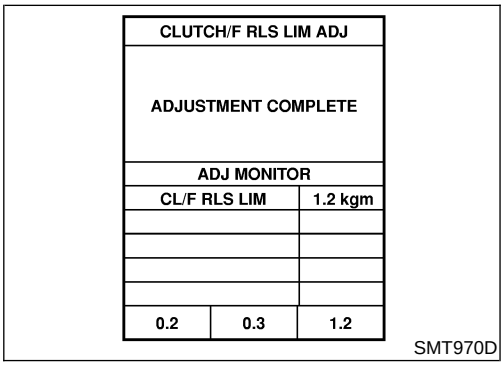

4. When clutch force release limit value is set to "1.2 kg-m", current value "0.3 kg-m" shown on display will be replaced by "1.2 kg-m" and "ADJUSTING COMPLETE" will appear at the same time. Clutch force release limit value setting is now complete.

Introduction

NBTF0013

DESCRIPTION

NBTF0013S01

When a malfunction (indicated by the 4WD warning lamp illumination) occurs, collect information first from the customer about how the malfunction occurs. Then, proceed with the diagnosis presuming it is the cause. Also inspect the electrical system, paying close attention to other possibilities such as fluid level and leaks.
All-mode 4WD transfer is controlled by transfer control unit and sensors.
If a malfunction occurs in the all-mode 4WD system, the 4WD warning lamp lights up to inform of the system malfunction. There are two ways to identify the cause of the malfunction.

1) Performing the self-diagnosis. (The 4WD warning lamp will indicate what kind of malfunction has occurred by flickering.)
2) Performing diagnosis using CONSULT-II.

DIAGNOSTIC WORKSHEET

NBTF0013S02

Information from Customer

NBTF0013S0201

KEY POINTS

WHAT ..... Vehicle model

WHEN..... Date, Frequencies

WHERE..... Road conditions

HOW..... Operating conditions, Symptoms

Information sheet from customer		
Customer name MR/MS	Model & Year	VIN
Transfer model ATX14A	Engine	Mileage
Incident Date	Manuf. Date	In Service Date
Frequency	☐ Continuous ☐ Intermittent (times a day)	
Symptoms	☐ 4WD shift indicator lamp does not turn on.	
	☐ 4WD warning lamp does not turn on.	
	☐ 4WD shift indicator lamp does not turn off.	
	☐ ATP warning lamp does not turn on.	
	☐ 4LO indicator lamp does not turn on.	
	☐ 4WD shift indicator lamp does not indicate “4H”.	
	☐ 4WD shift indicator lamp repeats flicking.	
	☐ Tight corner braking symptom occurs.	
	☐ 4WD system does not operate.	
	☐ Others.	
4WD warning lamp	☐ Continuously lit	☐ Not lit

Diagnostic Worksheet

NBTF0013S0202

1.	☐ Listen to customer complaints.	TF-44
2.	☐ Check transfer fluid.	TF-44
	☐ Leakage ☐ Fluid condition ☐ Fluid level	
3.	☐ Road testing	TF-44
	☐ 1. Check before engine is started. ☐ 2. Check at idle. ☐ 3. Cruise test	
4.	☐ Perform self-diagnosis NG items (with CONSULT-II and without CONSULT-II).	TF-30, TF-27
5.	☐ Check component. Repair or replace the damaged parts.	TF-111
6.	☐ Perform final check. Perform road test (1 through 3).	TF-44

Work Flow

=NBTF0014

HOW TO PERFORM TROUBLE DIAGNOSES FOR QUICK AND ACCURATE REPAIR

NBTF0014S01

A good understanding of the malfunction conditions can make troubleshooting faster and more accurate.
In general, each customer feels differently about a problem. It is important to fully understand the symptoms or conditions for a customer complaint.
Make good use of the two sheets provided, “Information from Customer” (Refer to TF-41.) and “Diagnostic Worksheet” (Refer to TF-42.), to perform the best troubleshooting possible.

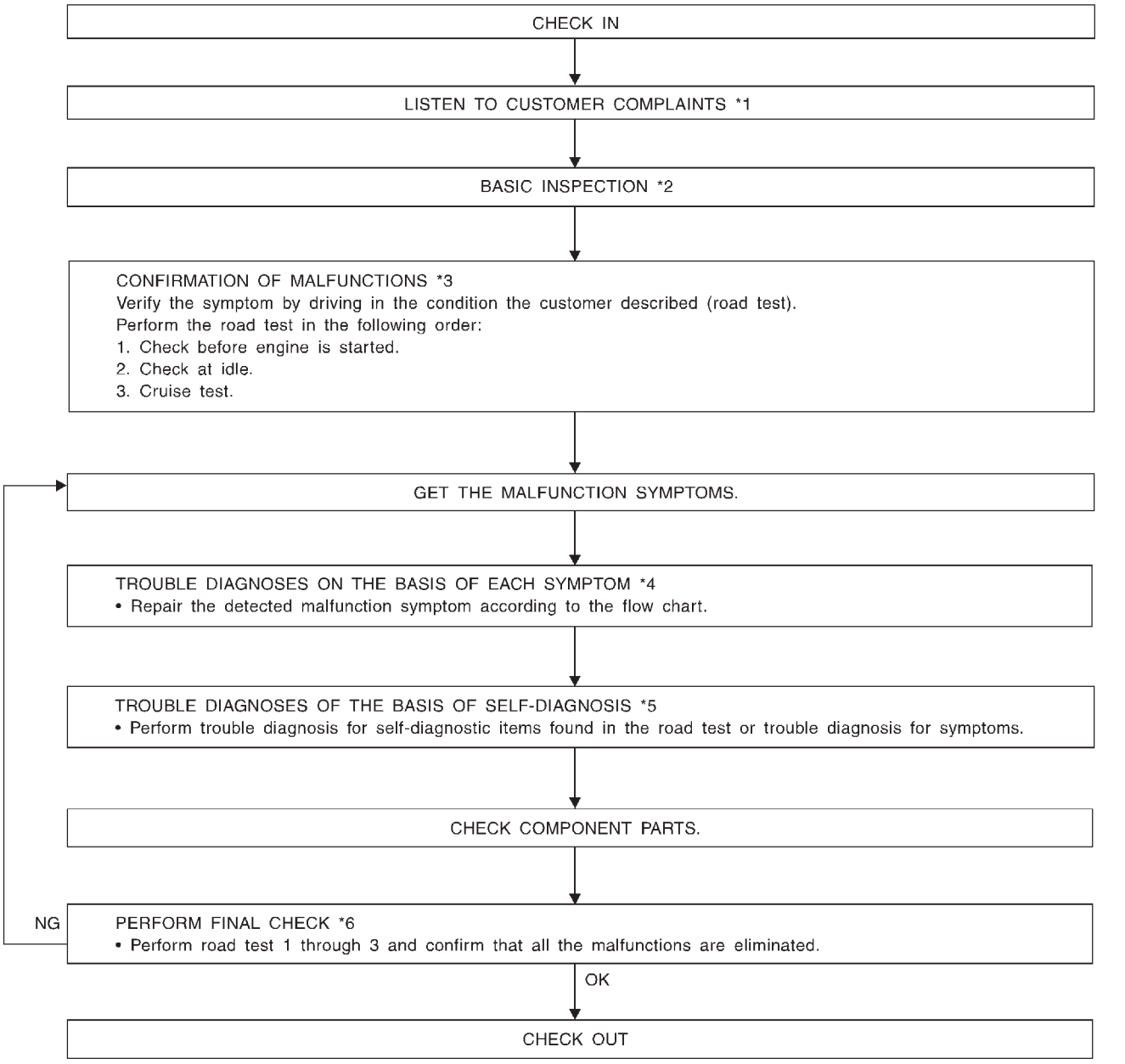

MTF013A

*1: TF-44
*2: TF-44
*3: TF-44
*4: TF-98 - TF-109
*5: TF-61 - TF-94
*6: TF-44

Listen to Customer Complaints

NBTF0015

- Each customer feels differently about a problem. It is important to fully understand the symptoms or conditions for a customer complaint.
- Listen to the customer about how and when the malfunction occurs, and make good use of it when performing the road test.

Transfer Fluid Check

NBTF0016

- Check fluid for leaks and fluid level. Refer to MA-22, “Checking All-mode 4WD Transfer Fluid”.

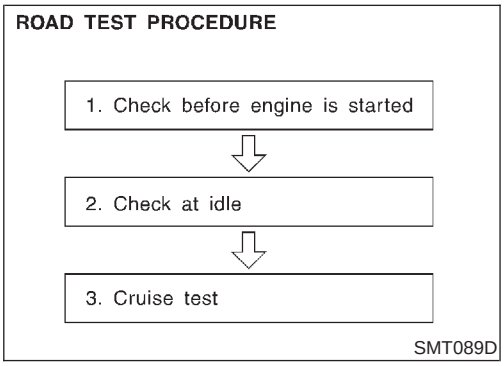

Road Test

NBTF0017

PREPARATION FOR ROAD TEST

NBTF0017S01

- The purpose of the test is to determine overall performance of transfer and analyze causes of problems.
- The road test consists of the following three parts:
- When a malfunction is found in any part of transfer, perform the road test to locate the malfunction area and repair the malfunction parts.

1. Check before engine is started
2. Check at idle
3. Cruise test

- Perform road test and place checks for NG items on the diagnostic worksheet. Refer to TF-42.

1. CHECK BEFORE ENGINE IS STARTED

=NBTF0017S02

1	CHECK 4WD SHIFT INDICATOR LAMP

1. Park vehicle on flat surface.
2. Turn ignition switch to "OFF" position.
3. Move A/T selector lever to "P" position.
4. Set 4WD shift switch to "4H" position.

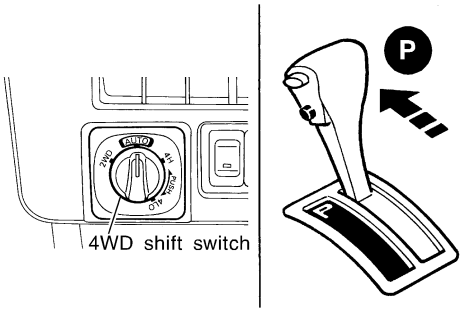

SMT849D

5. Set 4WD shift switch to "2WD" position.
6. Turn ignition switch to "ON" position. (Do not start engine.)
7. Does 4WD shift indicator lamp turn ON for approx. 1 second?

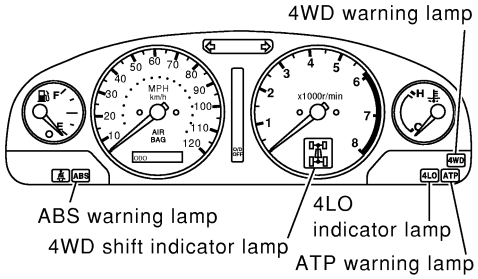

SMT958D

Yes or No

Yes	▶	GO TO 2.
No	▶	Go to Symptom 1. Refer to TF-98.

2	CHECK 4WD WARNING LAMP

Is 4WD warning lamp turned ON?

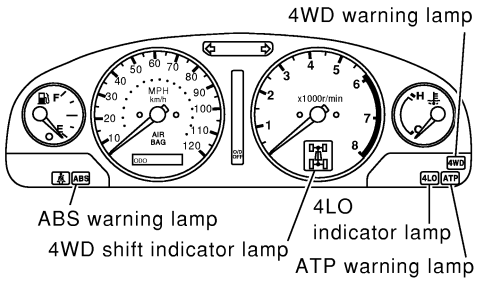

SMT958D

Yes or No

Yes	▶	1. Turn ignition switch to "OFF" position. 2. Perform self-diagnosis. Refer to "Trouble Diagnosis without CONSULT-II", TF-27. 3. Go to "2. CHECK AT IDLE". Refer to TF-47.
No	▶	Go to Symptom 2. Refer to TF-100.

2. CHECK AT IDLE

=NBTF0017S03

1	CHECK 4WD SHIFT INDICATOR LAMP

1. Park vehicle on flat surface.
2. Turn ignition switch to "OFF" position.
3. Move A/T selector lever to "P" or "N" position.
4. Set 4WD shift switch to "4H" position.
5. Set 4WD shift switch to "2WD" position.
6. Start engine.
7. Is 4WD shift indicator lamp turned OFF?

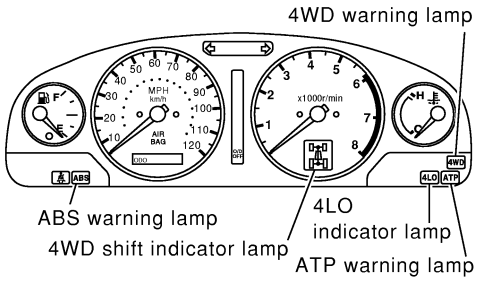

SMT958D

Yes or No

Yes	▶	Go to "ATP SWITCH, WAIT DETECTION SWITCH AND NEUTRAL-4LO SWITCH". Refer to TF-76.
No	▶	GO TO 2.

2	CHECK 4WD WARNING LAMP

Is 4WD warning lamp turned OFF?

Yes or No

Yes	▶	GO TO 3.
No	▶	Perform self-diagnosis. Refer to "Trouble Diagnosis without CONSULT-II", TF-27.

3	CHECK 4WD SHIFT INDICATOR LAMP

1. Set 4WD shift switch to "2WD", "AUTO", "4H", "4LO", "4H" and "2WD" in order. (Stay at each switch position for at least 1 second.)
2. Does 4WD shift indicator lamp change properly and does buzzer sound?

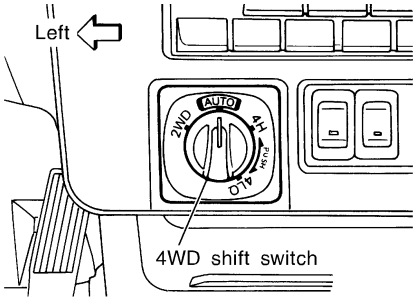

SMT851D

4WD shift switch operation	4WD shift indicator lamp	4WD warning lamp	Buzzer sound
2WD		4WD OFF	
			"Pip"
AUTO		4WD OFF	
			"Pip"
4H		4WD OFF	
4LO		4WD OFF	
4H		4WD OFF	
			"Pip"
AUTO		4WD OFF	
			"Pip"
2WD		4WD OFF	

SMT971D

Yes or No

Yes	▶	GO TO 4.
No	▶	Go to "2-4WD SHIFT SOLENOID VALVE AND 4WD SHIFT SWITCH". Refer to TF-66.

4	CHECK 4WD WARNING LAMP

Is 4WD warning lamp turned ON?

Yes or No

Yes	▶	Perform self-diagnosis. (Refer to "Trouble Diagnosis without CONSULT-II", TF-27.)
No	▶	GO TO 5.

5	CHECK 4WD SHIFT INDICATOR LAMP

1. Move A/T selector lever to "P" position.
2. Set 4WD shift switch from "4H" to "4LO".

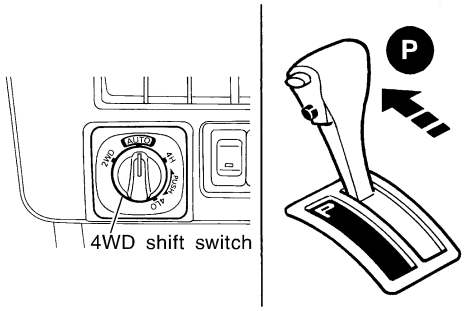

SMT849D

3. While shifting from "4H" to "4LO", does 4WD shift indicator lamp turn OFF and ATP warning lamp turn ON?

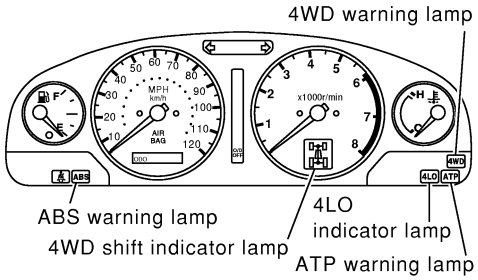

SMT958D

Yes or No

Yes	▶	GO TO 6.
No	▶	Go to Symptoms 3 and 4. Refer to TF-102.

6	CHECK 4WD SHIFT INDICATOR LAMP

Does 4WD shift indicator lamp indicate 4LO indicator lamp turn ON when 4WD shift switch is set in "4LO"?

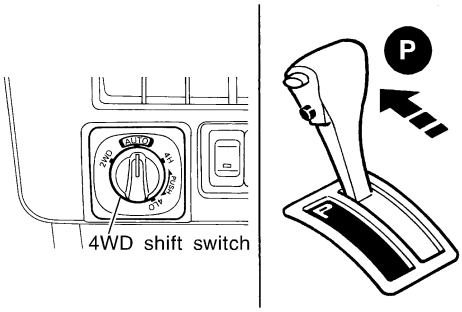

SMT849D

4WD shift switch operation	4WD shift indicator lamp	4WD warning lamp
4LO		**4WD** OFF

4LO indicator lamp

SMT770D

Yes or No

Yes	▶	GO TO 7.
No	▶	Go to Symptom 5. Refer to TF-104.

7	CHECK 4WD SHIFT INDICATOR LAMP (*1)

1. Set 4WD shift switch from "4LO" to "4H".
2. Does 4LO indicator lamp flicker? (*1)

*1: While "Wait" function is operating, 4LO indicator lamp flashes.

Yes or No

Yes	▶	Go to Symptom 6 and 7. Refer to TF-106 and TF-107.
No	▶	Go to "3. CRUISE TEST". Refer to TF-51.

3. CRUISE TEST

=NBTF0017S04

1	INSPECTION START

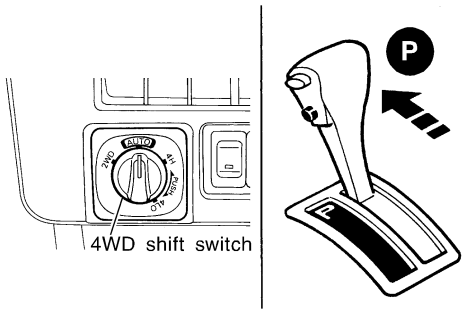

SMT849D

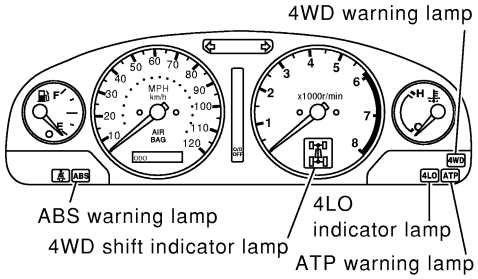

SMT958D

WITH CONSULT-II	▶	GO TO 2.
WITHOUT CONSULT-II	▶	GO TO 3.

2	CHECK INPUT SIGNAL

With CONSULT-II

1. Warm up engine to normal operating temperature.
2. Park vehicle on flat surface.
3. Move A/T selector lever to "P" position.
4. Set 4WD shift switch to "4H" position.
5. Set 4WD shift switch to "AUTO" position.
6. Start engine.
7. Drive for at least 30 seconds at a speed higher than 20 km/h (12 MPH).
   (Drive vehicle until "FLUID TEMP SE" exceeds 0.9V.)
8. Park vehicle on flat surface.
9. Move A/T selector lever to "P" position.
10. Set 4WD shift switch to "2WD" position.
11. Leave vehicle for at least 80 seconds with "FLUID TEMP SE" at 0.9V or less.

DATA MONITOR	
MONITOR	NO DTC
VHCL/S SEN-FR	0 km/h
VHCL/S SEN-RR	0 km/h
ENGINE SPEED	775 rpm
THRTL POS SEN	0.5 V
FLUID TEMP SE	0.86 V
BATTERY VOLT	14.1 V
2WD SWITCH	ON
AUTO SWITCH	OFF
LOCK SWITCH	OFF

SMT972D

12. Is 4WD warning lamp turned ON?

Yes or No

Yes	▶	Perform self-diagnosis. Refer to "Trouble Diagnosis with CONSULT-II", TF-30.
No	▶	GO TO 4.

3	CHECK INPUT SIGNAL

Without CONSULT-II

1. Warm up engine to normal operating temperature.
2. Park vehicle on flat surface.
3. Move A/T selector lever to "P" position.
4. Set 4WD shift switch to "4H" position.
5. Set 4WD shift switch to "AUTO" position.
6. Start engine.
7. Drive vehicle for at least 30 seconds at a speed higher than 20 km/h (12 MPH).
8. Park vehicle on flat surface.
9. Move A/T selector lever to "P" position.
10. Set 4WD shift switch to "2WD" position.
11. Is 4WD warning lamp turned ON?

Yes or No

Yes	▶	Perform self-diagnosis. Refer to "Trouble Diagnosis without CONSULT-II", TF-27.
No	▶	GO TO 4.

4	(1) CHECK TIGHT CORNER BRAKING SYMPTOM

1. Set 4WD shift switch to "AUTO" position.
2. Drive vehicle at speed lower than 20 km/h (12 MPH) with steering wheel fully turned.
3. Does tight corner braking symptom occur?

Yes or No

Yes	▶	GO TO 5.
No	▶	GO TO 6.

5	CONFIRM SYMPTOM AGAIN	
Confirm symptom and self-diagnosis again. Refer to "Trouble Diagnosis without CONSULT-II", TF-27 and "Trouble Diagnosis with CONSULT-II", TF-30.		
OK or NG		
OK	▶	GO TO 6.
NG	▶	Go to Symptoms 8 and 9. Refer to TF-108, 109.

6	(2) CHECK TIGHT CORNER BRAKING SYMPTOM	
1. Set 4WD shift switch to "4H" position. 2. Drive vehicle at speed lower than 20 km/h (12 MPH) with steering wheel fully turned. 3. Does tight corner braking symptom occur?		
Yes or No		
Yes	▶	**INSPECTION END**
No	▶	GO TO 7.

7	CONFIRM SYMPTOM AGAIN	
Confirm symptom and self-diagnosis again. Refer to "Trouble Diagnosis without CONSULT-II", TF-27 and "Trouble Diagnosis with CONSULT-II", TF-30.		
OK or NG		
OK	▶	**INSPECTION END**
NG	▶	Go to Symptoms 8 and 9. Refer to TF-108, 109.

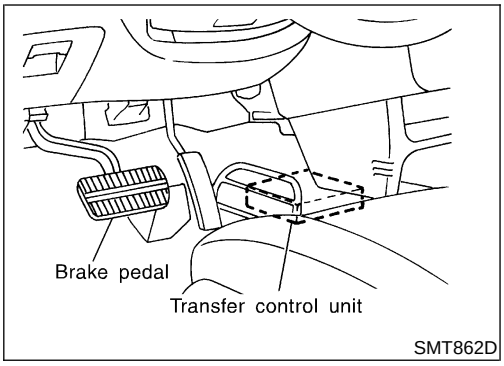

Transfer Control Unit Terminals and Reference Value

NBTF0018

REMOVAL AND INSTALLATION OF TRANSFER CONTROL UNIT

NBTF0018S03

Removal

NBTF0018S0301

1. Turn ignition switch OFF and disconnect negative battery terminal.
2. Remove console box.
3. Remove cluster lid C.
4. Remove audio assembly and A/C control unit.
5. Remove instrument lower panel on driver side.
6. Remove glove box.
7. Remove instrument lower panel on passenger side.
8. Remove instrument lower center panel.
9. Remove transfer control unit.

- For steps 2 through 8 above, refer to BT-21, “Instrument Panel Assembly”.

Installation

NBTF0018S0302

- Installation is in the reverse order of removal.

When installing transfer control unit, tighten transfer control unit lock nut.

Tightening torque:

: 4.3 - 5.8 N·m (0.44 - 0.59 kg-m, 38 - 51 in-lb)

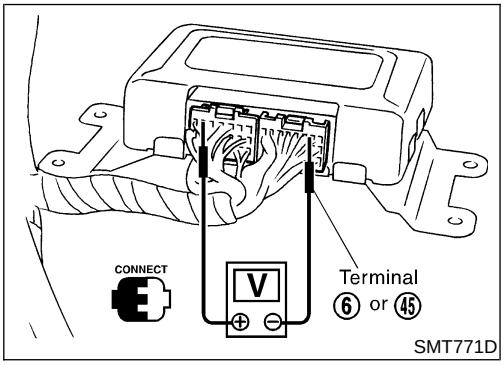

INSPECTION OF TRANSFER CONTROL UNIT

NBTF0018S01

- Measure voltage between each terminal and terminal 6 or 45 by following “TRANSFER CONTROL UNIT INSPECTION TABLE”, TF-55.

- Pin connector terminal layout

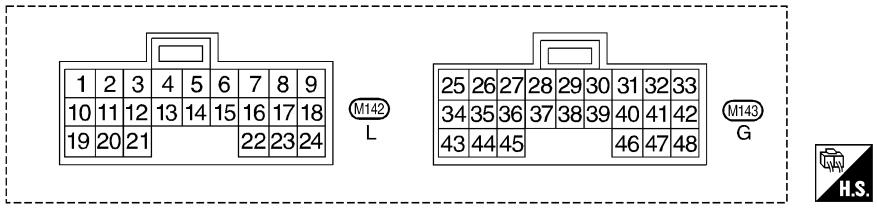

SMT772D

TRANSFER CONTROL UNIT INSPECTION TABLE

NBTF0018S02

(Data are reference values.)

Terminal No.	Item	Condition		Judgement standard
1	2-4WD shift solenoid valve	ON &	4WD shift switch is set to "2WD" position.	Less than 1V
			4WD shift switch is set to any position other than "2WD".	Battery voltage
2	4WD shift indicator lamp (2WD)		Lamp lights while system is operating properly.	Less than 1V
		ON &	2WD indicator lamp does not come on.	Battery voltage
3	Ground		—	—
4	Transfer shift relay (High)		While actuator is operating (4H → 4LO)	Battery voltage
			Actuator does not operate.	Less than 1V
5	4WD warning lamp		Lamp comes ON. (when engine is stopped.) (Fail-safe condition appears on display, engine is stopped, actuator position detection switch is inoperative, oil temperature is too high and/or tires of different size are installed.)	Less than 1V
			Except above	Battery voltage
6	Ground	—	—	—
7	PNP switch (R position)	ON &	A/T selector lever is set to "reverse" position.	Battery voltage
			A/T selector lever is set to any position other than "reverse".	Less than 1V
8	—	—	—	—

Transfer Control Unit Terminals and Reference Value (Cont'd)

Terminal No.	Item	Condition		Judgement standard
9	4WD shift switch (2WD)	ON &	4WD shift switch is set to "2WD" position.	Battery voltage
			4WD shift switch is set to any position other than "2WD".	Less than 1V
10	Transfer dropping resistor		4WD shift switch is set to "AUTO" position.	Approx. 4 - 14V
			4WD shift switch is set to any position other than "2WD".	Less than 1V
11	4WD shift indicator lamp (4H)		"4H" indicator lamp comes ON.	Less than 1V
			4WD shift switch is set to any position other than "4H".	Battery voltage
12	4WD shift indicator lamp (4LO)		"4LO" indicator lamp comes ON.	Approx. 0V
			4WD shift switch is set to any position other than "4LO".	Battery voltage
13	Transfer shift relay (Low)	ON &	While actuator is operating (4LO → 4H)	Battery voltage
			Actuator does not operate.	Approx. 0V
14	Transfer motor relay		Transfer motor relay is ON.	Battery voltage
			Transfer motor relay is OFF.	Less than 1V
15	PNP switch (N position)		A/T selector lever is set to "N" position.	Battery voltage
			A/T selector lever is set to any position other than "N" position.	Less than 1V
16	Power supply	—	Ignition key is set to "ON" position.	Battery voltage
			Ignition key is set to "OFF" position.	Approx. 0V
17	PNP switch (P position)	ON &	A/T selector lever is set to "P" position.	Battery voltage
			A/T selector lever is set to any position other than "P".	Less than 1V
18	4WD shift switch (4H)		4WD shift switch is set to "4H" position.	Battery voltage
			4WD shift switch is set to any position other than "4H".	Less than 1V
19	4WD solenoid valve		4WD shift switch is set to "AUTO" position.	Approx. 1.5 - 3V
			4WD shift switch is set to any position other than "2WD".	Less than 1V
20	—	—	—	—
21	4WD shift indicator lamp (AUTO)		"AUTO" indicator lamp comes ON.	Approx. 0V
			4WD shift switch is set to any position other than "AUTO".	Battery voltage
22	Power supply	—	Ignition key is set to "ON" position.	Battery voltage
			Ignition key is set to "OFF" position.	Approx. 0V

Terminal No.	Item	Condition		Judgement standard
23	4WD shift switch (4LO)	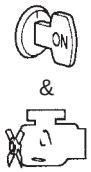	4WD shift switch is set to "4LO" position.	Battery voltage
			4WD shift switch is set to any position other than "4LO".	Less than 1V
24	4WD shift switch (AUTO)		4WD shift switch is set to "AUTO" position.	Battery voltage
			4WD shift switch is set to any position other than "AUTO".	Less than 1V
25	Neutral-4LO switch		Transfer is set to "4LO" position.	Approx. 0V
			Transfer is set to any position other than "4LO".	Power supply
26	Throttle position switch (closed)		Throttle valve is closed.	Power supply
			Throttle valve is in any position other than "closed".	Approx. 0V
27	Transfer 4H actuator switch		4WD shift switch is set to "4H" position.	Less than 1V
			4WD shift switch is set to any position other than "4H".	Battery voltage
28	Throttle position sensor (Ground)		Throttle valve is closed.	Less than 1V
			Throttle valve is fully open.	
29	TCM signal (Vehicle speed signal)		When moving at 20 km/h (12 MPH), use the CONSULT-II pulse frequency measuring function.*1 **CAUTION:** **Connect the diagnosis data link cable to the vehicle diagnosis connector.** *1: A circuit tester cannot be used to test this item.	Approximately 225 Hz
30	Throttle position sensor (Power supply for throttle position sensor)		Ignition key is set to "ON" position.	Approx. 4.5 - 5.5V
			Ignition key is set to "OFF" position.	Approx. 0V

Transfer Control Unit Terminals and Reference Value (Cont'd)

Terminal No.	Item	Condition		Judgement standard
31	Transfer fluid temperature sensor		At 20°C (68°F)	Approx. 1.5V
			At 80°C (176°F)	Approx. 0.5V
32	ABS signal		When moving, use the CONSULT-II pulse frequency measuirng function.*2 **CAUTION:** **Connect the diagnosis data link cable to the vehicle diagnosis connector.** *2: A circuit tester cannot be used to test this item.	Refer to the illustration (SMT973D) at the end of this section.
33	Transfer shift relay (High)		While actuator is operating from "4H" to "4LO"	Battery voltage
			Actuator does not operate.	Approx. 0V
34	Clutch pressure switch		4WD shift switch is set to "AUTO" or "4H", then A/T selector lever is set to "D" position. (wait detection system: OFF)	Battery voltage
			4WD shift switch is set to "2WD", "AUTO" or "4H", then A/T selector lever is set to "D" position. (wait detection system: ON)	Approx. 0V
35	Line pressure switch		4WD shift switch is set to "2WD", "AUTO" or "4H", then A/T selector lever is set to "D" position.	Battery voltage
			—	Approx. 0V
36	CONSULT-II (RX)	—	—	—
37	Tachometer		—	Refer to EC-127, "ECM Inspection Table".
38	Front revolution sensor		4WD shift switch is set to "4H" position. A/T selector lever is set to "D" position.	Approx. 1V [30 km/h (19 MPH)] Voltage rises in response to vehicle speed.

Terminal No.	Item	Condition		Judgement standard
39	ECM (Throttle position sensor)	ON & Engine running	Throttle valve is fully open.	Approx. 0.5V
			Throttle valve is closed.	Approx. 4.2V
40	ATP switch		A/T selector lever is set to "P" position.	Battery voltage
			A/T selector lever is set to any position other than "P".	Less than 1V
41	Transfer motor relay monitor		Transfer motor relay is ON.	Battery voltage
			Transfer motor relay is OFF.	Less than 1V
42	Transfer shift relay (LOW)		While actuator is operating from "4LO" to "4H" position	Battery voltage
			Actuator does not operate.	Approx. 0V
43	Wait detection switch		4WD shift switch is set to any position other than "4LO".	Battery voltage
			4WD shift switch is set to "4LO" position.*3	Less than 1V
44	Transfer 4LO actuator switch		4WD shift switch is set to any position other than "4LO". (Actuator: High position)	Battery voltage
			4WD shift switch is set to "4LO" position. (Actuator: Low position)	Less than 1V
45	Ground	—	—	—
46	—	—	—	—
47	Power supply (memory back up)	ON & Engine running	—	Battery voltage
48	CONSULT-II (TX)	—	—	—

*3: While wait detection system is operating, terminal 43 exists battery voltage.

ABS signal judgement standard

① Forward waveform when engine is running or stopped.

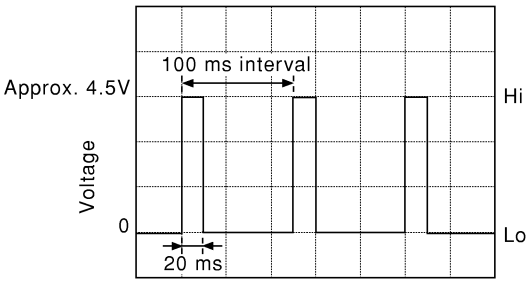

② ABS waveform during operation

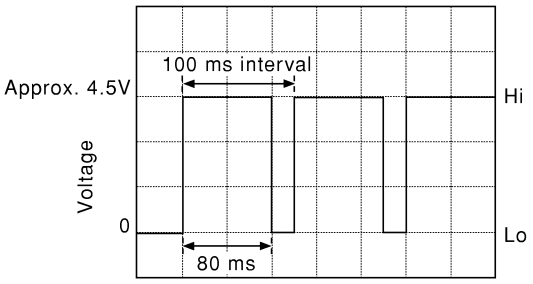

③ If the ABS control unit malfunctions, the terminal voltage is fixed at Hi (approximately 4.5V).

Caution:
In motion, (forward to turning) changes the Hi (ON) time from 20 to 40 to 60 ms.

SMT973D

Diagnostic Procedure

NBTF0019

1	FRONT REVOLUTION SENSOR	
Refer to “Front Revolution Sensor”, “COMPONENT INSPECTION”, TF-112.		
OK or NG		
OK	▶	GO TO 3.
NG	▶	GO TO 2.

2	CHECK CONTINUITY	
Check the following. ● Continuity of transfer sub-harness Refer to “Transfer Sub-harness”, “COMPONENT INSPECTION”, TF-113.		
OK or NG		
OK	▶	Repair or replace front revolution sensor.
NG	▶	Repair or replace front revolution sensor and transfer sub-harness.

3	CHECK INPUT SIGNAL	
WITH CONSULT-II	▶	GO TO 4.
WITHOUT CONSULT-II	▶	GO TO 5.

4	CHECK INPUT SIGNAL

With CONSULT-II

1. Start engine.
2. Select "ECU INPUT SIGNALS" in Data Monitor.
3. Read out the value of "VEHICLE SPEED SENSOR (FRONT)" while driving.

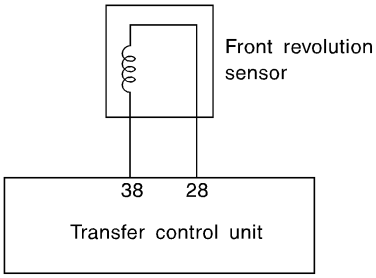

SMT773D

DATA MONITOR	
MONITOR	NO DTC
VHCL/S SEN-FR	0 km/h
VHCL/S SEN-RR	0 km/h
ENGINE SPEED	775 rpm
THRTL POS SEN	0.5 V
FLUID TEMP SE	0.86 V
BATTERY VOLT	14.1 V
2WD SWITCH	ON
AUTO SWITCH	OFF
LOCK SWITCH	OFF

SMT974D

4. Check if the value changes according to accelerating and decelerating the vehicle.

OK or NG

OK	▶	GO TO 6.
NG	▶	GO TO 7.

5	CHECK INPUT SIGNAL

Without CONSULT-II

1. Start engine.
2. Check voltage between transfer control unit harness connector terminals 38 and 28. (Measure it in AC range.)

Voltage:
0 km/h (0 MPH): 0V
30 km/h (19 MPH): More than 1V
(Voltage rises gradually in response to vehicle speed.)

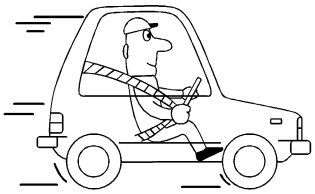

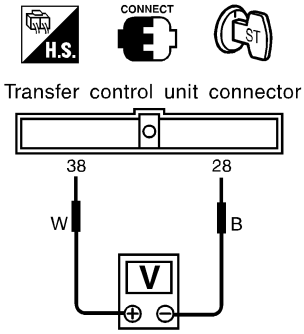

SMT774D

OK or NG

OK	▶	GO TO 6.
NG	▶	GO TO 7.

6	PERFORM SELF-DIAGNOSIS AGAIN

After driving for a while, perform self-diagnosis again.
Refer to "Trouble Diagnosis without CONSULT-II", TF-27.

OK or NG

OK	▶	**INSPECTION END**
NG	▶	1. Perform transfer control unit input/output signal inspection. Refer to "TRANSFER CONTROL UNIT INSPECTION TABLE", "TROUBLE DIAGNOSIS — GENERAL DESCRIPTION", TF-55. 2. If NG, recheck transfer control unit pin terminals for damage or loose connection with harness connector.

7	CHECK HARNESS CONTINUITY BETWEEN TRANSFER CONTROL UNIT AND FRONT REVOLUTION SENSOR SUB-HARNESS CONNECTOR

OK or NG

OK	▶	GO TO 6.
NG	▶	Repair or replace sub-harness connector between transfer control unit and front revolution sensor.

Diagnostic Procedure

NBTF0020

1	CHECK 4WD SOLENOID VALVE

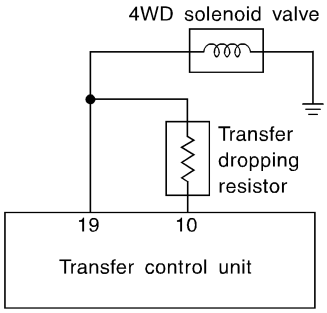

SMT775D

Refer to “4WD Solenoid Valve, Clutch Pressure Switch and Line Pressure Switch”, “COMPONENT INSPECTION”, TF-111.

OK or NG

OK	▶	GO TO 2.
NG	▶	**Check the following. If OK, repair or replace 4WD solenoid valve.** ● Continuity of transfer sub-harness Refer to “TRANSFER TERMINAL CORD ASSEMBLY SUB-HARNESS CONNECTOR”, “COMPONENT INSPECTION”, TF-114.

2	CHECK POWER SOURCE CIRCUIT

1. Turn ignition switch to “OFF” position.
2. Disconnect transfer control unit harness connector.
3. Check resistance between transfer terminal cord assembly sub-harness connector terminal 6 and transfer control unit harness connector terminal 10.

   Resistance: 11.2 - 12.8Ω

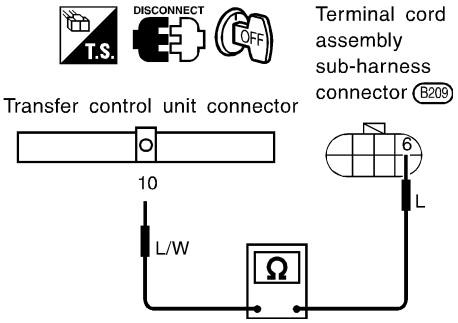

SMT776D

OK or NG

OK	▶	GO TO 3.
NG	▶	**Check the following.** ● Transfer dropping resistor Refer to “Transfer Dropping Resistor”, “COMPONENT INSPECTION”, TF-112. ● Continuity between transfer terminal cord assembly sub-harness connector terminal 6 and transfer control unit harness connector terminal 10.

3	CHECK POWER SOURCE CIRCUIT

1. Turn ignition switch to "OFF" position.
2. Check continuity between transfer terminal cord assembly sub-harness connector terminal 6 and transfer control unit harness connector terminal 19.
   Continuity should exist.

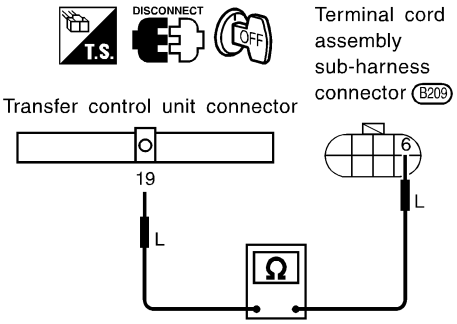

SMT777D

OK or NG

OK	▶	GO TO 4.
NG	▶	Repair or replace harness between transfer terminal cord assembly sub-harness connector terminal 6 and transfer control unit harness connector terminal 19.

4	PERFORM SELF-DIAGNOSIS

After driving for a while, perform self-diagnosis.
Refer to "Trouble Diagnosis without CONSULT-II", TF-27 and "Trouble Diagnosis with CONSULT-II", TF-30.

OK or NG

OK	▶	**INSPECTION END**
NG	▶	1. Perform transfer control unit input/output signal inspection. Refer to "TRANSFER CONTROL UNIT INSPECTION TABLE", TF-55. 2. If NG, recheck transfer control unit pin terminals for damage or loose connection with harness connector.

Diagnostic Procedure

NBTF0021

1	CHECK 2-4WD SHIFT SOLENOID VALVE AND 4WD SHIFT SWITCH

Refer to “2-4WD Shift Solenoid Valve and Transfer Fluid Temperature Sensor”, “COMPONENT INSPECTION”, TF-111.

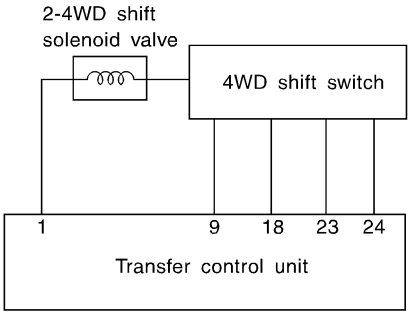

SMT778D

OK or NG

OK	▶	GO TO 2.
NG	▶	**Check the following. If OK, repair or replace 2-4WD shift solenoid valve and 4WD shift switch.** ● Continuity of transfer sub-harness Refer to “TRANSFER TERMINAL CORD ASSEMBLY SUB-HARNESS CONNECTOR”, “COMPONENT INSPECTION”, TF-114.

2	CHECK INPUT SIGNAL

With CONSULT-II

1. Select "ECU INPUT SIGNALS" in Data Monitor.
2. Read out ON/OFF status of "2WD SW" and "LOCK SWITCH".

DATA MONITOR	
MONITOR	NO DTC
VHCL/S SEN-FR	0 km/h
VHCL/S SEN-RR	0 km/h
ENGINE SPEED	775 rpm
THRTL POS SEN	0.5 V
FLUID TEMP SE	0.86 V
BATTERY VOLT	14.1 V
2WD SWITCH	ON
AUTO SWITCH	OFF
LOCK SWITCH	OFF

SMT974D

OK or NG

OK ▶	1. Perform transfer control unit input/output signal inspection. Refer to "TRANSFER CONTROL UNIT INSPECTION TABLE", "TROUBLE DIAGNOSIS — GENERAL DESCRIPTION", TF-55. 2. If NG, recheck transfer control unit pin terminals for damage or loose connection with harness connector.
NG ▶	GO TO 3.

3	CHECK 4WD SHIFT SWITCH POWER SOURCE

1. Disconnect 4WD shift switch harness connector.
2. Turn ignition switch to "ON" position.
3. Check voltage between 4WD shift switch harness connector terminal 1 and body ground.

Voltage: Battery voltage

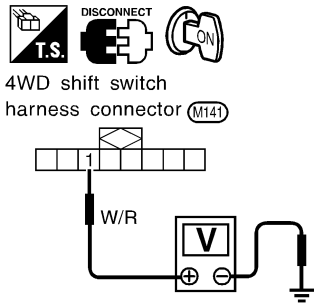

SMT852D

OK or NG

OK	▶	GO TO 4.
NG	▶	**Check the following.** ● No. 18 fuse (10A) ● Continuity between ignition switch and 4WD shift switch

4	CHECK HARNESS CONTINUITY

1. Turn ignition switch to "OFF" position.
2. Check continuity between the following terminals:

- **Transfer control unit 9 and 4WD shift switch 2 (2WD)**
- **Transfer control unit 18 and 4WD shift switch 5 (4H)**
- **Transfer control unit 24 and 4WD shift switch 3 (AUTO)**
- **Transfer control unit 23 and 4WD shift switch 6 (4LO)**
- **Transfer control unit 1 and Transfer terminal cord assembly sub-harness connector 4**
- **4WD shift switch 4 and Transfer terminal cord assembly sub-harness connector 5**
  Continuity should exist.

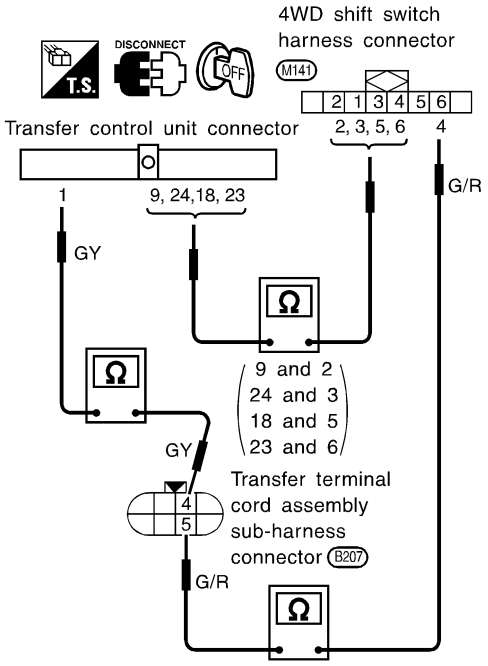

SMT853D

OK or NG

OK	▶	GO TO 5.
NG	▶	Repair harness or connector.

5	PERFORM SELF-DIAGNOSIS AGAIN

After driving for a while, perform self-diagnosis again.
Refer to "Trouble Diagnosis without CONSULT-II", TF-27.

OK or NG

OK	▶	**INSPECTION END**
NG	▶	1. Perform transfer control unit input/output signal inspection. Refer to "TRANSFER CONTROL UNIT INSPECTION TABLE", "TROUBLE DIAGNOSIS — GENERAL DESCRIPTION", TF-55. 2. If NG, recheck transfer control unit pin terminals for damage or loose connection with harness connector.

Diagnostic Procedure

NBTF0022

1	CHECK TRANSFER MOTOR AND TRANSFER MOTOR RELAY

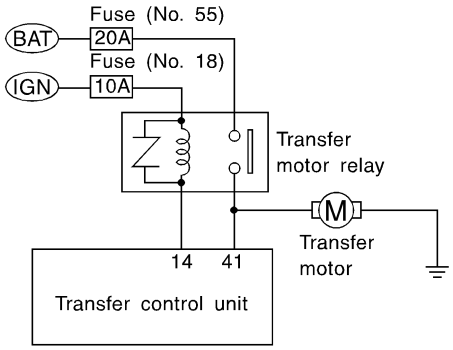

SMT782D

Refer to “Transfer Motor” and “Transfer Motor Relay”, “COMPONENT INSPECTION”, TF-113.

OK or NG

OK	▶	GO TO 3.
NG	▶	GO TO 2.

2	CHECK CONTINUITY

Check the following.
- Continuity of transfer sub-harness
  Refer to “TRANSFER SWITCH ASSEMBLY SUB-HARNESS CONNECTOR”, “COMPONENT INSPECTION”, TF-114.

OK or NG

OK	▶	Repair or replace transfer motor and transfer motor relay.
NG	▶	Repair or replace transfer sub-harness.

3	CHECK INPUT SIGNAL

With CONSULT-II
1. Select “MAIN SIGNALS” in Data Monitor.
2. Read out ON/OFF status of “MOTOR RELAY”.

DATA MONITOR	
MONITOR	NO DTC
4WD MODE	2WD
COMP CL TORQ	0.0 kgm
DUTY SOLENOID	4 %
2-4WD SOL	OFF
VHCL/S COMP	0 km/h
THROTTLE POSI	0.0 /8
MOTOR RELAY	OFF
4WD FAIL LAMP	OFF
SHIFT ACT 1	OFF

SMT975D

3. When the value is different from standard value although ON/OFF switching occurs, check the following items.
- PNP switch, throttle position sensor and closed throttle position switch circuits
  Refer to AT-99, “DTC P0705 Park/Neutral Position Switch”, AT-176, “DTC P1705 Throttle Position Sensor” and AT-184, “Closed Throttle Position Switch (idle position)”.

OK or NG

OK	▶	GO TO 4.
NG	▶	1. Perform transfer control unit input/output signal inspection. Refer to “TRANSFER CONTROL UNIT INSPECTION TABLE”, “TROUBLE DIAGNOSIS — GENERAL DESCRIPTION”, TF-55. 2. If NG, recheck transfer control unit pin terminals for damage or loose connection with harness connector.

4	CHECK TRANSFER MOTOR RELAY POWER SOURCE

1. Disconnect transfer motor relay harness connector.
2. Turn ignition switch to "ON" position.
3. Check voltage between transfer motor relay harness connector terminals 1, 3 and body ground.

Voltage: Battery voltage

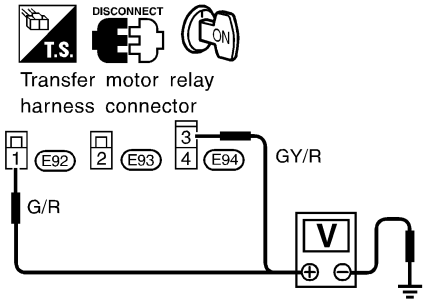

SMT854DA

OK or NG

OK	▶	GO TO 5.
NG	▶	**Check the following.** ● No. 55 fuse (20A) ● No. 18 fuse (10A) ● Harness continuity between fuse and transfer motor relay

5	CHECK HARNESS CONTINUITY

1. Turn ignition switch to "OFF" position.
2. Check continuity between the following terminals.

- **Transfer control unit 41 and Transfer motor 14**
- **Transfer control unit 41 and Transfer motor relay 2**
- **Transfer control unit 14 and Transfer motor relay 4**
- **Transfer motor 15 and body ground**
  Continuity should exist.

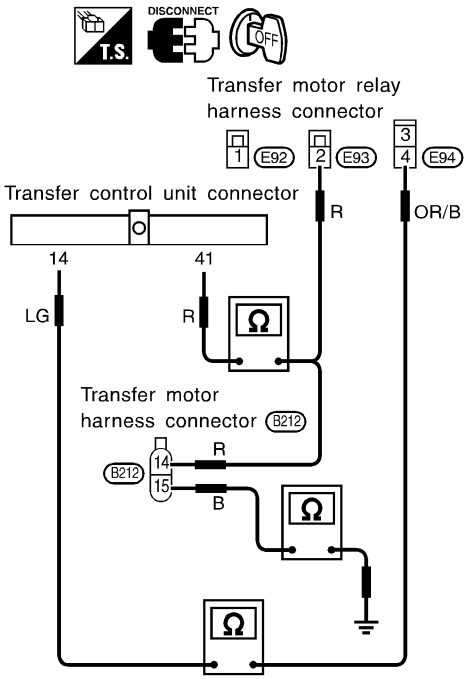

SMT855DA

OK or NG

OK	▶	GO TO 6.
NG	▶	Repair or replace harness or connector.

6	PERFORM SELF-DIAGNOSIS AGAIN

After driving for a while, perform self-diagnosis again.
Refer to "Trouble Diagnosis without CONSULT-II", TF-27 and "Trouble Diagnosis with CONSULT-II", TF-30.

OK or NG

OK	▶	**INSPECTION END**
NG	▶	1. Perform transfer control unit input/output signal inspection. Refer to "TRANSFER CONTROL UNIT INSPECTION TABLE", "TROUBLE DIAGNOSIS — GENERAL DESCRIPTION", TF-55. 2. If NG, recheck transfer control unit pin terminals for damage or loose connection with harness connector.

Diagnostic Procedure

NBTF0023

1	CHECK TRANSFER FLUID TEMPERATURE SENSOR	
Refer to “2-4WD Shift Solenoid Valve and Transfer Fluid Temperature Sensor”, “COMPONENT INSPECTION”, TF-111.		
OK or NG		
OK	▶	GO TO 3.
NG	▶	GO TO 2.

2	CHECK CONTINUITY	
Check the following. ● Continuity of transfer sub-harness Refer to “TRANSFER TERMINAL CORD ASSEMBLY SUB-HARNESS CONNECTOR”, “COMPONENT INSPECTION”, TF-114.		
OK or NG		
OK	▶	Repair or replace fluid temperature sensor.
NG	▶	Repair or replace transfer sub-harness.

3	CHECK INPUT SIGNAL	
WITH CONSULT-II	▶	GO TO 4.
WITHOUT CONSULT-II	▶	GO TO 5.

4	CHECK INPUT SIGNAL

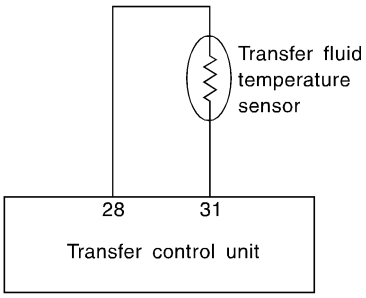

SMT784D

With CONSULT-II

1. Start engine.
2. Select "ECU INPUT SIGNALS" in Data Monitor.
3. Read out the value of "FLUID TEMP SE".

Voltage:

20°C (68°F): Approx. 1.5V
80°C (176°F): Approx. 0.5V

DATA MONITOR	
MONITOR	NO DTC
VHCL/S SEN-FR	0 km/h
VHCL/S SEN-RR	0 km/h
ENGINE SPEED	775 rpm
THRTL POS SEN	0.5 V
FLUID TEMP SE	0.86 V
BATTERY VOLT	14.1 V
2WD SWITCH	ON
AUTO SWITCH	OFF
LOCK SWITCH	OFF

SMT974D

OK or NG

OK	▶	GO TO 6.
NG	▶	**Check the following.** ● Continuity between transfer control unit and transfer terminal cord assembly sub-harness connector

5	CHECK INPUT SIGNAL

Without CONSULT-II

1. Turn ignition switch to "ON" position.
2. Check voltage between transfer control unit harness connector terminals 28 and 31.

Voltage:
20°C (68°F): Approx. 1.5V
80°C (176°F): Approx. 0.5V

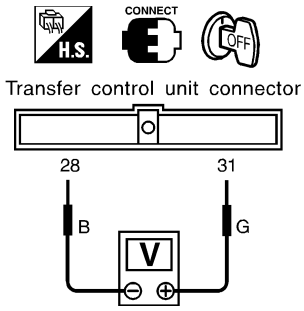

SMT785D

OK or NG

OK	▶	GO TO 6.
NG	▶	**Check the following.** ● Continuity between transfer control unit and transfer terminal cord assembly sub-harness connector

6	PERFORM SELF-DIAGNOSIS AGAIN

After driving for a while, perform self-diagnosis again.
Refer to "Trouble Diagnosis without CONSULT-II", TF-27.

OK or NG

OK	▶	**INSPECTION END**
NG	▶	1. Perform transfer control unit input/output signal inspection. Refer to "TRANSFER CONTROL UNIT INSPECTION TABLE", "TROUBLE DIAGNOSIS — GENERAL DESCRIPTION", TF-55. 2. If NG, recheck transfer control unit pin terminals for damage or loose connection with harness connector.

Diagnostic Procedure

NBTF0024

1	CHECK ATP SWITCH, WAIT DETECTION SWITCH AND NEUTRAL-4LO SWITCH

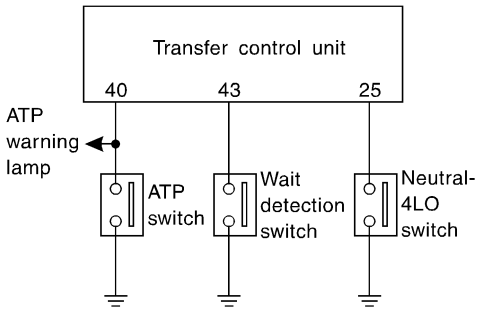

SMT786D

Refer to “ATP Switch, Neutral-4LO Switch and Wait Detection Switch”, “COMPONENT INSPECTION”, TF-112.

OK or NG

OK	▶	GO TO 3.
NG	▶	GO TO 2.

2	CHECK CONTINUITY OF TRANSFER SUB-HARNESS

Check the following.
- Continuity of transfer sub-harness
  Refer to “TRANSFER SWITCH ASSEMBLY SUB-HARNESS CONNECTOR”, “COMPONENT INSPECTION”, TF-114.

OK or NG

OK	▶	Repair or replace ATP switch, wait detection switch or neutral-4LO switch.
NG	▶	Repair or replace transfer sub-harness.

3	CHECK INPUT SIGNAL

WITH CONSULT-II	▶	GO TO 4.
WITHOUT CONSULT-II	▶	GO TO 5.

4	CHECK INPUT SIGNAL

With CONSULT-II

1. Select "ECU INPUT SIGNALS" in Data Monitor.
2. Read out the ON/OFF status of "ATP SW", "NEUTRAL SW" and "WAIT DETCT SW".

DATA MONITOR	
MONITOR	NO DTC
ATP SWITCH	OFF
N POSI SW AT	OFF
R POSI SW AT	OFF
P POSI SW AT	ON
CLOSED THL/SW	ON
ABS OPER SW	OFF
WAIT DETCT SW	OFF
SHIFT POS SW1	OFF
SHIFT POS SW2	ON

SMT976D

OK or NG

OK	▶	GO TO 6.
NG	▶	**Check the following.** ● Harness continuity between transfer switch assembly sub-harness connector and transfer control unit ● Continuity between transfer switch assembly sub-harness connector and body ground

5	CHECK INPUT SIGNAL

Without CONSULT-II

1. Turn ignition switch to "OFF" position.
2. Operate 4WD shift switch and check continuity between the following terminals.

Continuity:

Terminal 40 (ATP switch) and body ground
- **"4H" position: No continuity should exist.**
- **Between "4H" and "4LO": Continuity should exist.**
- **"4LO" position: No continuity should exist.**

Terminal 25 (Neutral-4LO switch) and body ground
- **"4H" position: No continuity should exist.**
- **"4LO" position: Continuity should exist.**

Terminal 43 (Wait detection switch) and body ground
- **"4H" position: No continuity should exist. (*1)**
- **"4LO" position: Continuity should exist.**

*1: After setting from "4LO" to "4H", continuity exists while "Wait" function is operating in "4H" position. (No continuity exists when "Wait" function is canceled.)

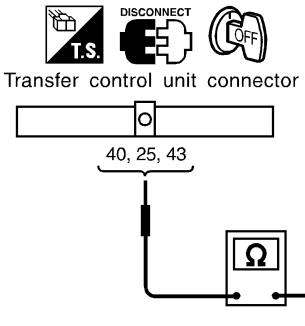

SMT787D

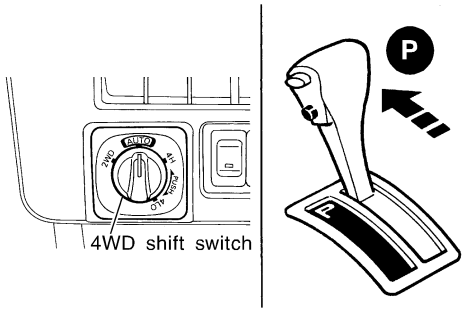

SMT849D

OK or NG

OK	▶	GO TO 6.
NG	▶	**Check the following.** ● Harness continuity between transfer switch assembly sub-harness connector and transfer control unit ● Continuity between transfer switch assembly sub-harness connector and body ground

6	PERFORM SELF-DIAGNOSIS AGAIN
After driving for a while, perform self-diagnosis again. Refer to "Trouble Diagnosis without CONSULT-II", TF-27.	
OK or NG	
OK ▶	**INSPECTION END**
NG ▶	1. Perform transfer control unit input/output signal inspection. Refer to "TRANSFER CONTROL UNIT INSPECTION TABLE", "TROUBLE DIAGNOSIS — GENERAL DESCRIPTION", TF-55. 2. If NG, recheck transfer control unit pin terminals for damage or loose connection with harness connector.

Diagnostic Procedure

NBTF0025

1	CHECK MALFUNCTION	
Is this malfunction detected only while driving in reverse? **Yes or No**		
Yes	▶	**CHECK A/T PNP SWITCH "R" POSITION.** Refer to AT-99, "DTC P0705 Park/Neutral Position Switch".
No	▶	GO TO 2.

2	CHECK OTHER MALFUNCTION	
Are other malfunctions also detected by self-diagnosis and CONSULT-II? Refer to "Trouble Diagnosis without CONSULT-II", TF-27 and "Trouble Diagnosis with CONSULT-II", TF-30. **Yes or No**		
Yes	▶	**CHECK FOR OTHER MALFUNCTIONS.** (When other malfunctions are eliminated, clutch pressure switch malfunction display may disappear.)
No	▶	GO TO 3.

3	CHECK 2-4WD SHIFT SOLENOID VALVE AND 4WD SHIFT SWITCH CIRCUITS	
Check 2-4WD shift solenoid valve and 4WD shift switch circuits. **OK or NG**		
OK	▶	GO TO 4.
NG	▶	Check, repair or replace faulty parts.

4	CHECK INPUT SIGNAL	
WITH CONSULT-II	▶	GO TO 5.
WITHOUT CONSULT-II	▶	GO TO 6.

5	CHECK INPUT SIGNAL

With CONSULT-II

1. Turn ignition switch to "ON" position.
2. Select "ECU INPUT SIGNALS" in Data Monitor.
3. Read out ON/OFF status of "CL PRES SW".

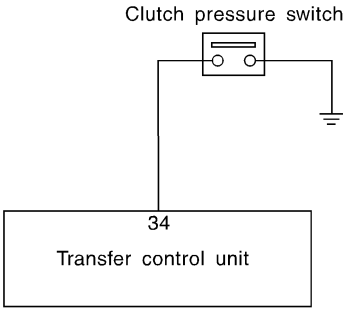

SMT788D

DATA MONITOR	
MONITOR	NO DTC
4L SWITCH	OFF
N POSI SW TF	OFF
LINE PRES SW	OFF
CL PRES SW	OFF
ATP SWITCH	OFF
N POSI SW AT	OFF
R POSI SW AT	OFF
P POSI SW AT	ON
CLOSED THL/SW	ON

SMT977D

OK or NG

OK	▶	GO TO 7.
NG	▶	**Check the following.** ● Continuity between transfer control unit and transfer terminal cord assembly sub-harness connector ● Transfer sub-harness ● Clutch pressure switch Refer to "4WD Solenoid Valve, Clutch Pressure Switch and Line Pressure Switch", "COMPONENT INSPECTION", TF-111.

6	CHECK INPUT SIGNAL

Without CONSULT-II

1. Turn ignition switch to "ON" position and set 4WD shift switch to "4H" position.
2. Check voltage between transfer control unit harness connector terminal 34 and body ground.

When 4WD shift switch is in "2WD":
Battery voltage should exist.
When 4WD shift switch is in "AUTO" or "4H" and A/T selector lever is in "D":
"Wait" operating: Battery voltage should exist.
"Wait" not operating: Approx. 0 volts should exist.

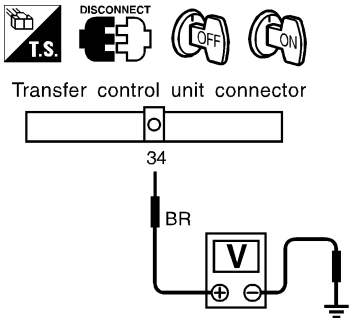

SMT789D

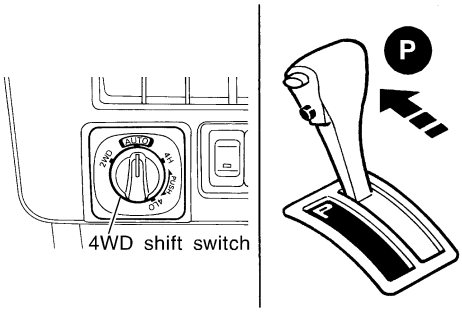

SMT849D

OK or NG

OK	▶	GO TO 7.
NG	▶	**Check the following.** ● Continuity between transfer control unit and transfer terminal cord assembly sub-harness connector ● Transfer sub-harness ● Clutch pressure switch Refer to "4WD Solenoid Valve, Clutch Pressure Switch and Line Pressure Switch", "COMPONENT INSPECTION", TF-111.

7	PERFORM SELF-DIAGNOSIS AGAIN

1. Check hydraulic parts.
2. After driving for a while, perform self-diagnosis again. Refer to "Trouble Diagnosis without CONSULT-II", TF-27.

OK or NG

OK	▶	**INSPECTION END**
NG	▶	1. Perform transfer control unit input/output signal inspection. Refer to "TRANSFER CONTROL UNIT INSPECTION TABLE", TF-55. 2. If NG, recheck transfer control unit pin terminals for damage or loose connection with harness connector.

Diagnostic Procedure

NBTF0026

1	CHECK MALFUNCTION	
Is this malfunction detected only while driving in reverse?		
Yes or No		
Yes	▶	**CHECK A/T PNP SWITCH "R" POSITION.** Refer to AT-99, "DTC P0705 Park/Neutral Position Switch".
No	▶	GO TO 2.

2	CHECK OTHER MALFUNCTIONS	
Are other malfunctions also detected by self-diagnosis and CONSULT-II? Refer to "Trouble Diagnosis without CONSULT-II", TF-27 and "Trouble Diagnosis with CONSULT-II", TF-30.		
Yes or No		
Yes	▶	**CHECK FOR OTHER MALFUNCTIONS.** (When other malfunctions are eliminated, line pressure switch malfunction display may disappear.)
No	▶	GO TO 3.

3	CHECK INPUT SIGNAL	
WITH CONSULT-II	▶	GO TO 4.
WITHOUT CONSULT-II	▶	GO TO 5.

4	CHECK INPUT SIGNAL

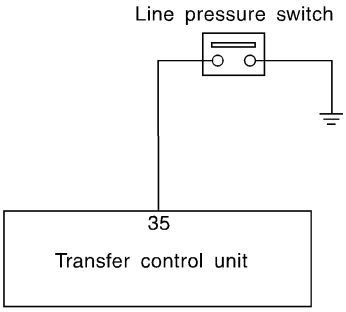

SMT790D

With CONSULT-II

1. Select "ECU INPUT SIGNALS" in Data Monitor.
2. Read out the ON/OFF status of "LINE PRES SW".

DATA MONITOR	
MONITOR	NO DTC
4L SWITCH	OFF
N POSI SW TF	OFF
LINE PRES SW	OFF
CL PRES SW	OFF
ATP SWITCH	OFF
N POSI SW AT	OFF
R POSI SW AT	OFF
P POSI SW AT	ON
CLOSED THL/SW	ON

SMT977D

OK or NG

OK	▶	GO TO 6.
NG	▶	**Check the following.** ● Continuity between transfer control unit and transfer terminal cord assembly sub-harness connector ● Transfer sub-harness ● Line pressure switch Refer to "4WD Solenoid Valve, Clutch Pressure Switch and Line Pressure Switch", "COMPONENT INSPECTION", TF-111.

5	CHECK INPUT SIGNAL

Without CONSULT-II

1. Turn ignition switch to "OFF" position.
2. Disconnect transfer control unit harness connector.
3. Check continuity between transfer control unit harness connector terminal 35 and body ground.

After the vehicle has been left for at least 5 minutes in a room temperature with ignition switch "OFF": No continuity should exist.

With ignition switch in "ON", 4WD shift switch in "AUTO" or "4H" and A/T selector lever in "D": Continuity should exist.

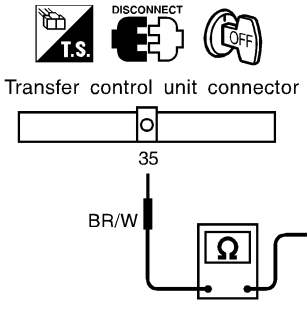

SMT791D

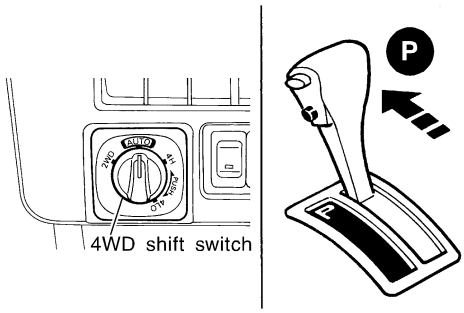

SMT849D

OK or NG

OK	▶	GO TO 6.
NG	▶	**Check the following.** ● Continuity between transfer control unit and transfer terminal cord assembly sub-harness connector ● Transfer sub-harness ● Line pressure switch Refer to "4WD Solenoid Valve, Clutch Pressure Switch and Line Pressure Switch", "COMPONENT INSPECTION", TF-111.

6	PERFORM SELF-DIAGNOSIS AGAIN

1. Check hydraulic parts.
2. After driving for a while, perform self-diagnosis again. Refer to "Trouble Diagnosis without CONSULT-II", TF-27.

OK or NG

OK	▶	**INSPECTION END**
NG	▶	1. Perform transfer control unit input/output signal inspection. Refer to TF-55. 2. If NG, recheck transfer control unit pin terminals for damage or loose connection with harness connector.

Diagnostic Procedure

NBTF0027

1	CHECK INPUT SIGNAL
WITHOUT CONSULT-II ▶	GO TO 2.

2	CHECK INPUT SIGNAL

Without CONSULT-II

1. Turn ignition switch to “OFF” position.
2. Disconnect ABS control unit harness connector.
3. Disconnect ABS control unit and transfer control unit harness connectors.
4. Check continuity between transfer control unit harness connector terminal 32 and ABS control unit harness connector terminal 13.
   Continuity should exist.
5. Check continuity between transfer control unit harness connector terminal 32, ABS control unit harness connector terminal 13 and body ground.
   No continuity should exist.

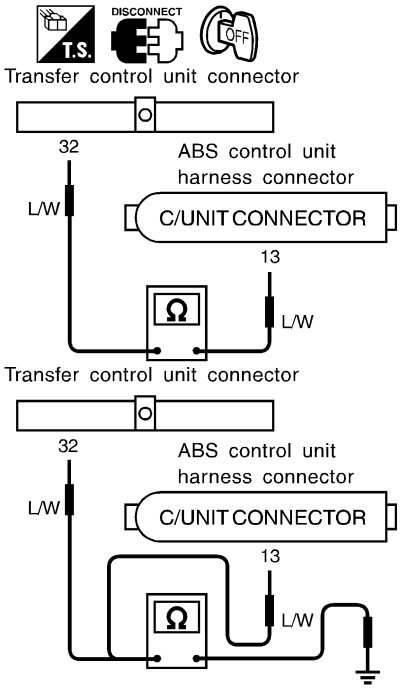

SMT793DA

OK or NG

OK ▶	GO TO 3.
NG ▶	Repair or replace harness or connector between ABS control unit and transfer control unit.

3	CHECK COMMUNICATION LINE

Check communication line between ABS control unit and transfer control unit.
(Refer to BR-77, “8. Vehicle vibrates excessively when ABS is operating”.)

OK or NG

OK ▶	GO TO 4.
NG ▶	Check, repair or replace faulty parts.

4	PERFORM SELF-DIAGNOSIS AGAIN	
After driving for a while, perform self-diagnosis again. Refer to "Trouble Diagnosis without CONSULT-II", TF-27.		
OK or NG		
OK	▶	**INSPECTION END**
NG	▶	1. Perform transfer control unit input/output signal inspection. Refer to "TRANSFER CONTROL UNIT INSPECTION TABLE", "TROUBLE DIAGNOSIS — GENERAL DESCRIPTION", TF-55. 2. If NG, recheck transfer control unit pin terminals for damage or loose connection with harness connector.

Diagnostic Procedure

NBTF0028

1	CHECK TRANSFER CONTROL UNIT POWER SOURCE

1. Turn ignition switch to “OFF” position and perform self-diagnosis again.
   Refer to “Trouble Diagnosis without CONSULT-II”, TF-27 and “Trouble Diagnosis with CONSULT-II”, TF-30.
2. Turn ignition switch to “OFF” position.
3. Disconnect transfer control unit harness connector.
4. Check voltage between transfer control unit harness connector terminal 47 and body ground.
   Voltage: Battery voltage

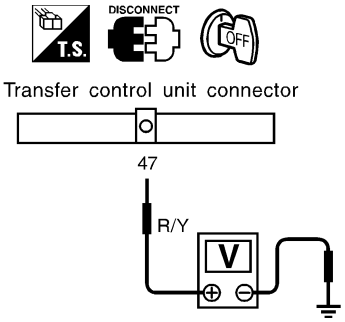

SMT794D

OK or NG

OK	▶	GO TO 2.
NG	▶	**Check the following.** ● No. 24 fuse (7.5A) ● Harness continuity between fuse and transfer control unit

2	PERFORM SELF-DIAGNOSIS AGAIN

After driving for a while, perform self-diagnosis again.
Refer to “Trouble Diagnosis without CONSULT-II”, TF-27 and “Trouble Diagnosis with CONSULT-II”, TF-30.

OK or NG

OK	▶	**INSPECTION END**
NG	▶	1. Perform transfer control unit input/output signal inspection. Refer to “TRANSFER CONTROL UNIT INSPECTION TABLE”, “TROUBLE DIAGNOSIS — GENERAL DESCRIPTION”, TF-55. 2. If NG, recheck transfer control unit pin terminals for damage or loose connection with harness connector.

Diagnostic Procedure

NBTF0064

1	SHIFT ACTUATOR	
Refer to “Actuator & Actuator Position Switch”, “COMPONENT INSPECTION”, TF-115.		
OK or NG		
OK	▶	GO TO 3.
NG	▶	GO TO 2.

2	CHECK POWER SOURCE	

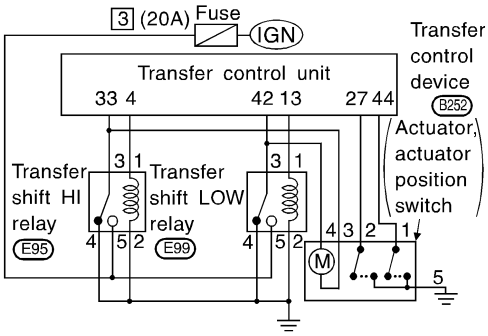

SMT825DA

1. Disconnect transfer control device terminal.
2. Turn ignition switch to “ON”. (Do not start engine.)
3. Check voltage between transfer control device harness connector 3 (or 4) and body ground while 4WD shift switch is set from 4H to 4LO (or from 4LO to 4H).
   Voltage: Battery voltage

OK or NG		
OK	▶	Repair or replace actuator.
NG	▶	1. Recheck the following. ● Continuity between ignition switch and transfer HI & LOW relays ● Ignition switch and No. 3 fuse (20A) ● Continuity between transfer shift HI & LOW relays and transfer control device 2. If NG, repair or replace damaged part.

3	CHECK INPUT SIGNAL	
WITH CONSULT-II	▶	GO TO 4.
WITHOUT CONSULT-II	▶	GO TO 5.

4	CHECK INPUT SIGNAL

With CONSULT-II

1. Start engine (idling).
2. Select "SELF-DIAG RESULTS" in Select Diag Mode.
3. Read out self-diagnostic result.

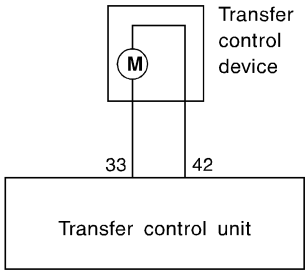

SMT826D

SELF-DIAG RESULTS
DTC RESULTS
NO DTC IS DETECTED. FURTHER TESTING MAY BE REQUIRED.

SMT978D

OK or NG

OK	▶	GO TO 7.
NG	▶	GO TO 6.

5	CHECK INPUT SIGNAL

Without CONSULT-II

1. Start engine (idling).
2. Check voltage between transfer control unit harness connector terminal 33 (or 42) and body ground while 4WD shift switch is set from 4H to 4LO (or from 4LO to 4H).

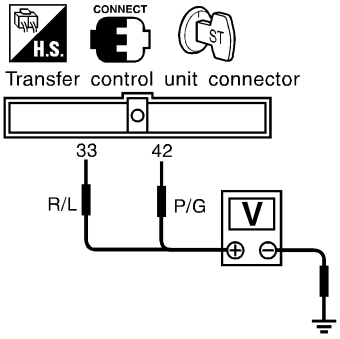

SMT828D

3. Result

Terminal No.	Condition	Voltage
33	While actuator is operating from 4H to 4LO.	Battery voltage
	Actuator does not operate.	Approx. 0V
42	While actuator is operating from 4LO to 4H.	Battery voltage
	Actuator does not operate.	Approx. 0V

MTBL0202

OK or NG

OK	▶	GO TO 7.
NG	▶	GO TO 6.

6	CHECK HARNESS CONTINUITY BETWEEN TRANSFER CONTROL UNIT AND TRANSFER CONTROL DEVICE

OK or NG

OK	▶	GO TO 7.
NG	▶	Repair and replace harness connector between transfer control unit and transfer control device.

7	PERFORM SELF-DIAGNOSIS AGAIN

After driving for a while, perform self-diagnosis again.
Refer to "Trouble Diagnosis without CONSULT-II", TF-27.

OK or NG

OK	▶	INSPECTION END
NG	▶	1. Perform transfer control unit/output signal inspection. Refer to "TRANSFER CONTROL UNIT INSPECTION TABLE", "TROUBLE DIAGNOSIS — GENERAL DESCRIPTION", TF-55. 2. If NG, recheck transfer control unit pin terminals for damage or loose connection with harness connector.

Diagnostic Procedure

NBTF0065

1	SHIFT ACTUATOR POSITION SWITCH	
Refer to “Actuator & Actuator Position Switch”, “COMPONENT INSPECTION”, TF-115.		
OK or NG		
OK	▶	GO TO 3.
NG	▶	GO TO 2.

2	CHECK POSITION SWITCH	
1. Recheck continuity of shift actuator position switch. Refer to “Actuator & Actuator Position Switch”, “COMPONENT INSPECTION”, TF-115. **Continuity should exist.**		
OK or NG		
OK	▶	GO TO 3.
NG	▶	Repair or replace position switch.

3	CHECK INPUT SIGNAL	
WITH CONSULT-II	▶	GO TO 4.
WITHOUT CONSULT-II	▶	GO TO 5.

4 CHECK INPUT SIGNAL

With CONSULT-II

1. Start engine (idling).
2. Select “SELF-DIAG RESULTS” in Select Diag Mode.
3. Read out self-diagnostic result.

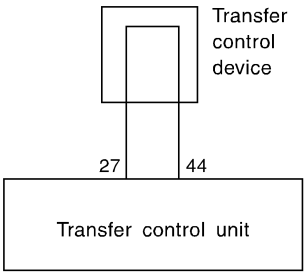

SMT829DA

SELF-DIAG RESULTS
DTC RESULTS
NO DTC IS DETECTED. FURTHER TESTING MAY BE REQUIRED.

SMT978D

OK or NG

OK	▶	GO TO 7.
NG	▶	GO TO 6.

5	CHECK INPUT SIGNAL

Without CONSULT-II

1. Start engine (idling).
2. Check voltage transfer control unit harness connector terminal 27 (or 44) and body ground while 4WD shift switch is set from 4H to 4LO (or from 4LO to 4H).

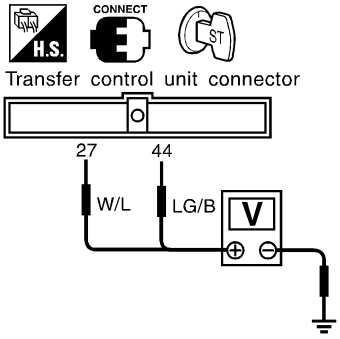

SMT830D

3. Result

Terminal No.	Condition	Voltage
27	4WD shift switch is set to 4H.	Less than 1V
	4WD shift switch is set except 4H.	Battery voltage
44	4WD shift switch is set to 4LO.	Less than 1V
	4WD shift switch is set except 4LO.	Battery voltage

MTBL0203

OK or NG

OK	▶	GO TO 7.
NG	▶	GO TO 6.

6	CHECK HARNESS CONTINUITY BETWEEN TRANSFER CONTROL UNIT AND TRANSFER CONTROL DEVICE

OK or NG

OK	▶	GO TO 7.
NG	▶	Repair and replace harness connector between transfer control unit and transfer control device.

7	PERFORM SELF-DIAGNOSIS AGAIN

After driving for a while, perform self-diagnosis again.
Refer to "Trouble Diagnosis without CONSULT-II", TF-27.

OK or NG

OK	▶	INSPECTION END
NG	▶	1. Perform transfer control unit/output signal inspection. Refer to "TRANSFER CONTROL UNIT INSPECTION TABLE", "TROUBLE DIAGNOSIS — GENERAL DESCRIPTION", TF-55. 2. If NG, recheck transfer control unit pin terminals for damage or loose connection with harness connector.

Diagnostic Procedure

NBTF0066

1	SHIFT ACTUATOR CIRCUIT	
Refer to “Transfer Shift Relay (High & Low)”, “COMPONENT INSPECTION” and “Actuator & Actuator Position Switch”, “COMPONENT INSPECTION”, TF-114, 115.		
OK or NG		
OK	▶	GO TO 2.
NG	▶	Repair or replace transfer shift relay and actuator and actuator position switch.

2	CHECK POWER SOURCE OF TRANSFER SHIFT (HI & LOW) RELAY	

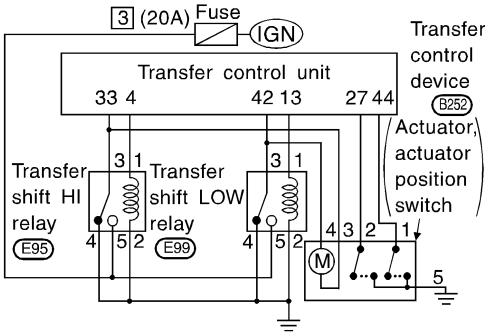

SMT825DA

1. Disconnect transfer control device terminal.
2. Turn ignition switch to “ON” (Do not start engine).
3. Check voltage between transfer shift HI and LOW relay terminal 5 and body ground.
   Voltage: Battery voltage

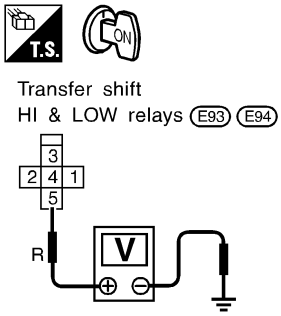

SMT831D

OK or NG		
OK	▶	GO TO 3.
NG	▶	**Check the following.** ● Continuity between ignition switch and transfer shift HI & LOW relays ● Check ground circuit between transfer shift HI & LOW relays and body ground. ● Ignition switch and No. 3 fuse (20A)

3	CHECK POWER SOURCE OF TRANSFER CONTROL DEVICE

1. Disconnect transfer control device terminal.
2. Turn ignition switch to "ON". (Do not start engine.)
3. Turn 4WD shift switch from "4H" to "4LO" (or from "4LO" to "4H").
4. Check voltage between transfer control device terminal 3 (or 4) and body ground.

Voltage: Battery voltage

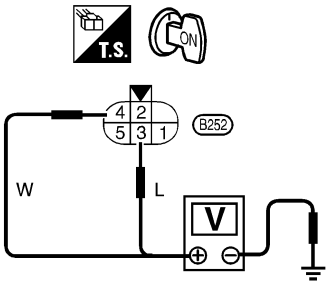

SMT832D

OK or NG

OK	▶	GO TO 4.
NG	▶	**Check the following.** ● Harness and connector from transfer shift HI and LOW relays to transfer control device harness terminal ● Ground circuit between transfer control device and body ground.

4	CHECK INPUT SIGNAL	
WITH CONSULT-II	▶	GO TO 5.
WITHOUT CONSULT-II	▶	GO TO 6.

5	CHECK INPUT SIGNAL

With CONSULT-II

1. Start engine (idling).
2. Select "SELF-DIAG RESULTS" in Select Diag Mode.
3. Read out self-diagnostic result.

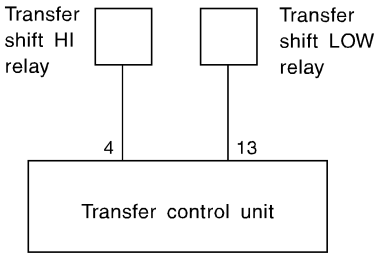

SMT835D

SELF-DIAG RESULTS
DTC RESULTS
NO DTC IS DETECTED. FURTHER TESTING MAY BE REQUIRED.

SMT978D

OK or NG

OK	▶	GO TO 8.
NG	▶	GO TO 7.

6	CHECK INPUT SIGNAL

Without CONSULT-II

1. Start engine (idling).
2. Check voltage between transfer control unit harness connector terminal 4 (or 13) and body ground while 4WD shift switch is set from 4H to 4LO (or from 4LO to 4H).

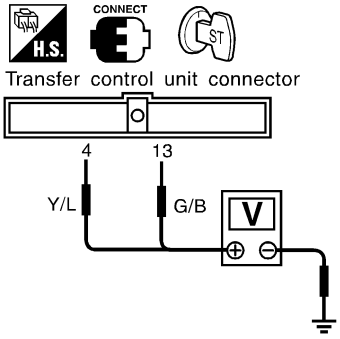

SMT836D

3. Result

Terminal No.	Condition	Voltage
4	While actuator is operating from 4H to 4LO.	Battery voltage
	Actuator does not operate.	Less than 1V
13	While actuator is operating from 4LO to 4H.	Battery voltage
	Actuator does not operate.	Approx. 0V

MTBL0516

OK or NG

OK	▶	GO TO 8.
NG	▶	GO TO 7.

7	CHECK HARNESS CONTINUITY BETWEEN TRANSFER CONTROL UNIT AND TRANSFER CONTROL DEVICE

OK or NG

OK	▶	GO TO 8.
NG	▶	Repair and replace harness connector between transfer control unit and transfer control device.

8	PERFORM SELF-DIAGNOSIS AGAIN

After driving for a while, perform self-diagnosis again.
Refer to "Trouble Diagnosis without CONSULT-II", TF-27.

OK or NG

OK	▶	INSPECTION END
NG	▶	1. Perform transfer control unit/output signal inspection. Refer to "TRANSFER CONTROL UNIT INSPECTION TABLE", "TROUBLE DIAGNOSIS — GENERAL DESCRIPTION", TF-55. 2. If NG, recheck transfer control unit pin terminals for damage or loose connection with harness connector.

Symptom 1. 4WD Shift Indicator Lamp Does Not Turn ON

NBTF0029

SYMPTOM: Although ignition switch is turned “ON”, all the 4WD shift indicator lamps do not turn ON for 1 second.

1	CHECK TRANSFER CONTROL UNIT POWER SOURCE

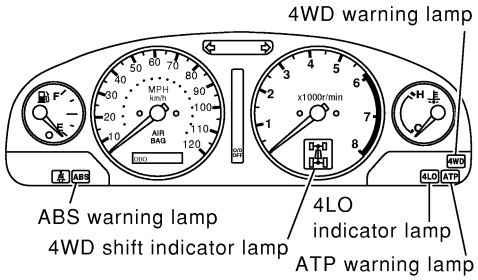

SMT958D

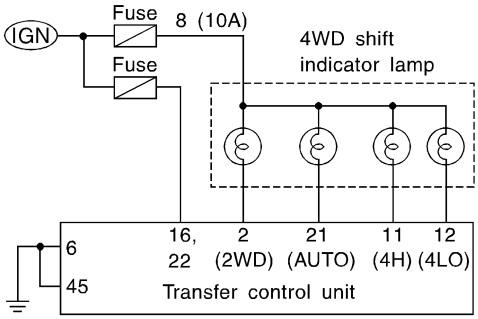

SMT860D

1. Turn ignition switch to “OFF” position and disconnect transfer control unit harness connector.
2. Turn ignition switch to “ON” position. (Do not start engine.)
3. Check voltage between transfer control unit harness connector terminals 16, 22 and body ground.

Voltage: Battery voltage

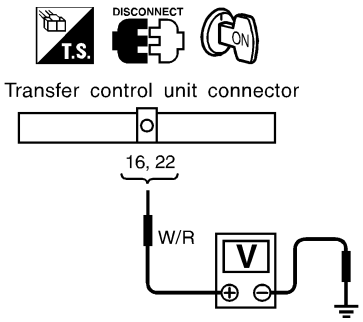

SMT796D

OK or NG

OK	▶	GO TO 2.
NG	▶	**Check the following.** ● Continuity between ignition switch and transfer control unit ● Ignition switch and No. 18 fuse (10A)

2	CHECK TRANSFER CONTROL UNIT GROUND CIRCUIT

1. Turn ignition switch to "OFF" position.
2. Disconnect transfer control unit harness connector.
3. Measure resistance between transfer control unit harness connector terminals 6, 45 and body ground.

Resistance: 0Ω

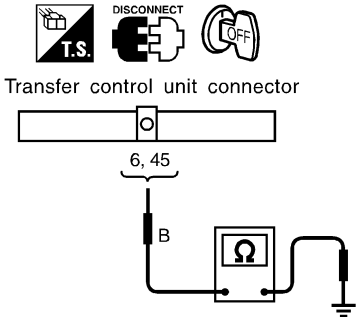

SMT797D

OK or NG

OK	▶	GO TO 3.
NG	▶	Check continuity between transfer control unit and body ground.

3	CHECK PROCEDURES FROM THE BEGINNING AGAIN

Check again.

OK or NG

OK	▶	**INSPECTION END**
NG	▶	1. Perform transfer control unit input/output signal inspection. Refer to "TRANSFER CONTROL UNIT INSPECTION TABLE", "TROUBLE DIAGNOSIS — GENERAL DESCRIPTION", TF-55. 2. If NG, recheck transfer control unit pin terminals for damage or loose connection with harness connector.

Symptom 2. 4WD Warning Lamp Does Not Turn ON

=NBTF0030

SYMPTOM: Although ignition switch is turned “ON”, 4WD warning lamp does not turn ON.

1	CHECK TRANSFER CONTROL UNIT POWER SOURCE

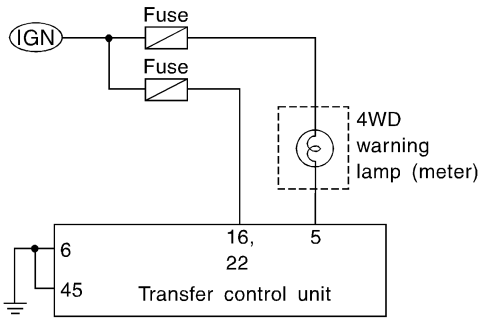

SMT799D

1. Turn ignition switch to “OFF” position and disconnect transfer control unit harness connector.
2. Turn ignition switch to “ON” position.
   (Do not start engine.)
3. Check voltage between transfer control unit harness connector terminals 16, 22 and body ground.
   Voltage: Battery voltage

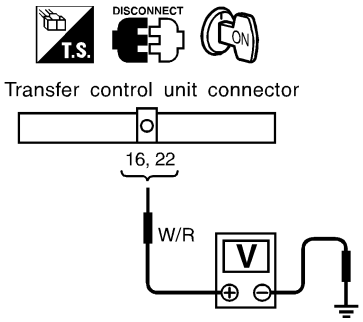

SMT800D

OK or NG

OK	▶	GO TO 2.
NG	▶	**Check the following.** ● Continuity between ignition switch and transfer control unit ● Ignition switch and No. 18 fuse (10A)

2	CHECK TRANSFER CONTROL UNIT GROUND CIRCUIT

1. Turn ignition switch to "OFF" position.
2. Disconnect transfer control unit harness connector.
3. Measure resistance between transfer control unit harness connector terminals 6, 45 and body ground.

Resistance: 0Ω

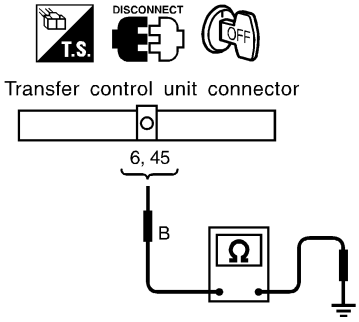

SMT803D

OK or NG

OK	▶	GO TO 3.
NG	▶	Check continuity between transfer control unit and body ground.

3	CHECK 4WD WARNING LAMP CIRCUIT

Check the following.
- 4WD warning lamp
- Continuity between ignition switch and 4WD warning lamp
- Continuity between 4WD warning lamp and transfer control unit

OK or NG

OK	▶	GO TO 4.
NG	▶	• Repair or replace harness or connector. • Replace 4WD warning lamp.

4	CHECK PROCEDURES FROM THE BEGINNING AGAIN

Check again.

OK or NG

OK	▶	**INSPECTION END**
NG	▶	1. Perform transfer control unit input/output signal inspection. Refer to "TRANSFER CONTROL UNIT INSPECTION TABLE", "TROUBLE DIAGNOSIS — GENERAL DESCRIPTION", TF-55. 2. If NG, recheck transfer control unit pin terminals for damage or loose connection with harness connector.

Symptom 3. 4WD Shift Indicator Lamp Does Not Turn OFF

NBTF0031

SYMPTOM: When 4WD shift switch is set from “4H” to “4LO”, all the 4WD shift indicator lamps do not turn OFF.

1	CHECK ATP SWITCH CIRCUIT

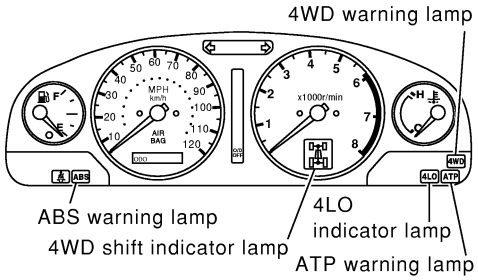

SMT958D

Check ATP switch circuit.
Refer to “Diagnostic Procedure”, “ATP SWITCH, WAIT DETECTION SWITCH AND NEUTRAL-4LO SWITCH”, TF-112.

OK or NG

OK	▶	GO TO 2.
NG	▶	Check, repair or replace faulty parts.

2	CHECK PROCEDURE FROM THE BEGINNING AGAIN

Check again.

OK or NG

OK	▶	**INSPECTION END**
NG	▶	Recheck each connector’s pin terminals for damage or loose connection.

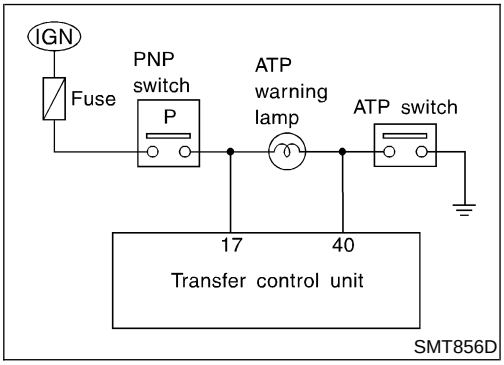

SMT856D

Symptom 4. ATP Warning Lamp Does Not Turn ON

NBTF0032

SYMPTOM: When 4WD shift switch is set from “4H” to “4LO” with A/T selector lever in “P” position, ATP warning lamp does not turn ON.

1	CHECK ATP SWITCH CIRCUIT

Check ATP switch circuit.
Refer to “Diagnostic Procedure”, “ATP SWITCH, WAIT DETECTION SWITCH AND NEUTRAL-4LO SWITCH”, TF-112.

OK or NG

OK	▶	GO TO 2.
NG	▶	Check, repair or replace faulty parts.

2	CHECK FOLLOWING ITEMS	
Check the following. ● ATP warning lamp ● Continuity between PNP ("P" position) switch terminal 4 and ATP warning lamp ● Continuity between ATP warning lamp and ATP switch		
OK or NG		
OK	▶	GO TO 3.
NG	▶	Repair or replace ATP warning lamp, harness or connector.

3	CHECK PNP SWITCH CIRCUIT	
Check PNP switch circuit. Refer to AT-99, "DTC P0705 Park/Neutral Position Switch".		
OK or NG		
OK	▶	GO TO 4.
NG	▶	Check, repair or replace faulty parts.

4	CHECK PROCEDURES FROM THE BEGINNING AGAIN	
Check again.		
OK or NG		
OK	▶	**INSPECTION END**
NG	▶	Recheck each connector's pin terminals for damage or loose connection.

Symptom 5. 4LO Indicator Lamp Does Not Turn ON

=NBTF0033

SYMPTOM: When 4WD shift switch is set from “4H” to “4LO” position, 4LO indicator lamp does not turn ON.

1	CHECK TRANSFER CONTROL UNIT POWER SUPPLY CIRCUIT

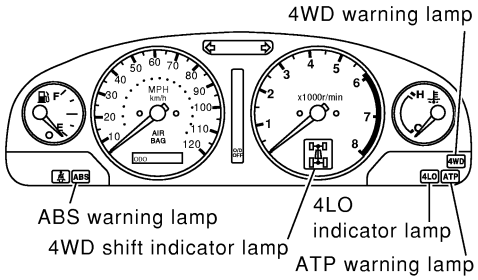

SMT958D

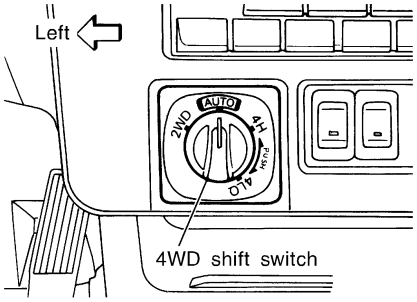

SMT851D

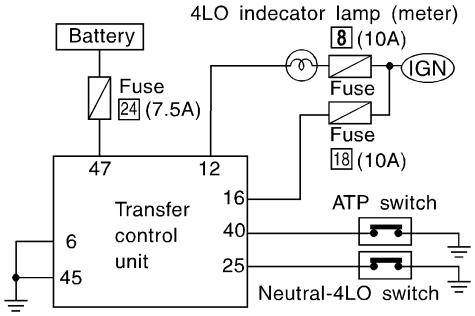

SMT979D

1. Disconnect battery negative terminal (−), then transfer control unit connector.
2. Connect battery negative terminal (−) and turn ignition switch “ON” (with engine stopped).
3. Check voltage across transfer control unit body-side connector terminals 47, 16 and body ground.
   Voltage: Battery voltage

OK or NG

OK	▶	GO TO 2.
NG	▶	**Check the following.** ● Continuity between battery and transfer control unit ● Ignition switch (Refer to EL-9, “Power Supply Routing”.) ● No. 24 fuse (7.5A), No. 8 fuse (10A) and No. 18 fuse (10A)

2	CHECK TRANSFER CONTROL UNIT GROUND CIRCUIT	
1. Turn ignition switch "OFF", and disconnect transfer control unit connector. 2. Check for continuity between transfer control unit body-side connector terminals 6, 45 and body ground. **Continuity should exist.**		
OK or NG		
OK	▶	GO TO 3.
NG	▶	**Check the following.** ● Continuity between transfer control unit and body ground

3	CHECK 4LO INDICATOR LAMP CIRCUIT	
Disconnect battery negative terminal (−) and check the following items: 1. Check condition of 4LO indicator lamp. 2. Check continuity between battery and 4LO indicator lamp. 3. Check continuity between 4LO indicator lamp and transfer control unit connector terminal 12. 4. Check condition of ATP switch. 5. Check condition of neutral-4LO switch. 6. Check continuity between neutral-4LO switch ground terminal 6 and body ground.		
OK or NG		
OK	▶	GO TO 4.
NG	▶	**Check the following.** ● 4LO indicator lamp ● Neutral-4LO switch Refer to "ATP Switch, Neutral-4LO Switch and Wait Detection Switch", "COMPONENT INSPECTION", TF-112.

4	CHECK PROCEDURES FROM THE BEGINNING	
Check again.		
OK or NG		
OK	▶	**INSPECTION END**
NG	▶	1. Perform transfer control unit input/output signal inspection. Refer to "TRANSFER CONTROL UNIT INSPECTION TABLE", "TROUBLE DIAGNOSIS — GENERAL DESCRIPTION", TF-55. 2. If NG, recheck transfer control unit pin terminals for damage or loose connection with harness connector.

Symptom 6. 4WD Shift Indicator Lamp Does Not Indicate “4H”

NBTF0034

SYMPTOM: When 4WD shift switch is set to “4H”, 4WD shift indicator lamp does not indicate “4H”.

1	CHECk 4WD WARNING LAMP	

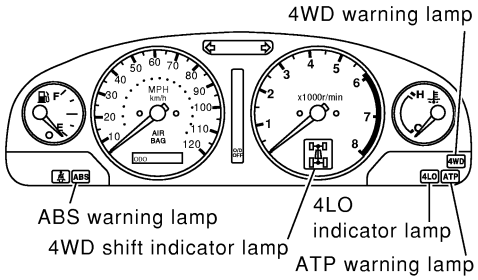

SMT958D

Is 4WD warning lamp turned ON?

Yes or No

Yes	▶	Refer to “Trouble Diagnosis without CONSULT-II”, TF-27.
No	▶	GO TO 2.

2	CHECK FOLLOWING ITEMS	

Check the following.
- Neutral-4LO switch circuit. Refer to TF-76.
- Wait detection switch circuit. Refer to TF-76.
- ATP switch circuit. Refer to TF-76.

OK or NG

OK	▶	GO TO 3.
NG	▶	Check, repair or replace faulty parts.

3	CHECK PROCEDURES FROM THE BEGINNING AGAIN	

Check again.

OK or NG

OK	▶	**INSPECTION END**
NG	▶	Recheck each connector’s pin terminals for damage or loose connection.

Symptom 7. 4WD Shift Indicator Lamp Repeats Flickering

=NBTF0035

SYMPTOM: 4WD shift indicator lamp keeps flickering.

1	CHECK 4WD SHIFT INDICATOR LAMP

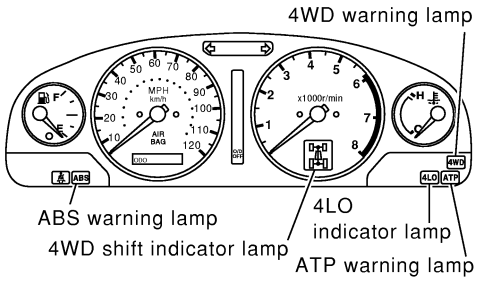

SMT958D

1. Set 4WD shift switch to “2WD” position.
2. Move vehicle forward and backward. Or drive straight increasing or decreasing speed under 20 km/h (12 MPH).
3. Does 4WD shift indicator lamp keep flickering?

Yes or No

Yes	▶	GO TO 2.
No	▶	**INSPECTION END**

2	CHECK TIGHT CORNER BRAKING SYMPTOM

Drive vehicle at speed under 20 km/h (12 MPH), turning steering wheel to the limit. Does tight corner braking symptom occur?

Yes or No

Yes	▶	GO TO 3.
No	▶	GO TO 4.

3	CHECK 4WD SHIFT INDICATOR LAMP

Does the 4WD shift indicator lamp keep flickering when the front wheels are jacked up?

Yes or No

Yes	▶	Check transfer unit operating system.
No	▶	Check tires.

4	CHECK 4WD WARNING LAMP

Does 4WD warning lamp flicker? (4WD shift indicator lamp is turned OFF.)

Yes or No

Yes	▶	Perform self-diagnoses. Refer to “Trouble Diagnosis without CONSULT-II”, TF-27.
No	▶	GO TO 5.

5	CHECK 4WD SHIFT INDICATOR LAMP

Does 4WD shift indicator lamp keep flickering?

Yes or No

Yes	▶	Check again.
No	▶	**INSPECTION END**

Symptom 8. Tight Corner Braking Symptom

NBTF0036

SYMPTOM: Tight corner braking symptom occurs. (Hydraulic system failure)

1	CHECK INPUT SIGNAL

With CONSULT-II

1. Select “ECU INPUT SIGNALS” in Data Monitor.
2. Read out the ON/OFF status of “CLUTCH PRES SW”.

DATA MONITOR	
MONITOR	NO DTC
4L SWITCH	OFF
N POSI SW TF	OFF
LINE PRES SW	OFF
CL PRES SW	OFF
ATP SWITCH	OFF
N POSI SW AT	OFF
R POSI SW AT	OFF
P POSI SW AT	ON
CLOSED THL/SW	ON

SMT977D

Without CONSULT-II

Check voltage between transfer control unit harness connector terminal 34 and body ground.
Refer to “TRANSFER CONTROL UNIT INSPECTION TABLE”, “TROUBLE DIAGNOSIS — GENERAL DESCRIPTION”, TF-55.

OK or NG

OK	▶	**Disassemble transfer unit and check the following.** ● Control valve assembly ● 4WD solenoid valve ● 2-4WD shift solenoid valve ● Clutch piston ● Clutch assembly
NG	▶	GO TO 2.

2	CHECK CLUTCH PRESSURE SWITCH CIRCUIT

Check clutch pressure switch circuit.
Refer to “Diagnostic Procedure”, “CLUTCH PRESSURE SWITCH”, TF-80.

OK or NG

OK	▶	GO TO 3.
NG	▶	Check, repair or replace faulty parts.

3	CHECK PROCEDURES FROM THE BEGINNING AGAIN

Check again.

OK or NG

OK	▶	**INSPECTION END**
NG	▶	Recheck each connector’s pin terminals for damage or loose connection.

Symptom 9. 4WD System Does Not Operate

=NBTF0037

SYMPTOM: The vehicle cannot be put into 4WD mode. (Hydraulic system failure)

1	CHECK INPUT SIGNAL

With CONSULT-II

1. Select “ECU INPUT SIGNALS” in Data Monitor.
2. Read out the ON/OFF status of “CLUTCH PRES SW”.

DATA MONITOR	
MONITOR	NO DTC
4L SWITCH	OFF
N POSI SW TF	OFF
LINE PRES SW	OFF
CL PRES SW	OFF
ATP SWITCH	OFF
N POSI SW AT	OFF
R POSI SW AT	OFF
P POSI SW AT	ON
CLOSED THL/SW	ON

SMT977D

Without CONSULT-II

Check voltage between transfer control unit harness connector terminal 34 and body ground.
Refer to “TRANSFER CONTROL UNIT INSPECTION TABLE”, “TROUBLE DIAGNOSIS — GENERAL DESCRIPTION”, TF-55.

OK or NG

OK	▶	1. Check transfer fluid level. 2. Disassemble transfer unit and check the following. ● Transfer motor ● Main oil pump assembly ● Sub-oil pump assembly ● Oil strainer ● Control valve assembly ● 2-4WD shift solenoid valve ● Oil filter element ● Lip seal ● Strainer O-ring ● Main oil pump drive gear ● Seal ring ● D-ring ● Clutch piston ● Clutch assembly
NG	▶	GO TO 2.

2	CHECK CLUTCH PRESSURE CIRCUIT

Check clutch pressure switch circuit.
Refer to “Diagnostic Procedure”, “CLUTCH PRESSURE SWITCH”, TF-80.

OK or NG

OK	▶	GO TO 3.
NG	▶	Check, repair or replace faulty parts.

3	CHECK PROCEDURES FROM THE BEGINNING	
Check again.		
	OK or NG	
OK	▶	**INSPECTION END**
NG	▶	Recheck each connector's pin terminals for damage or loose connection.

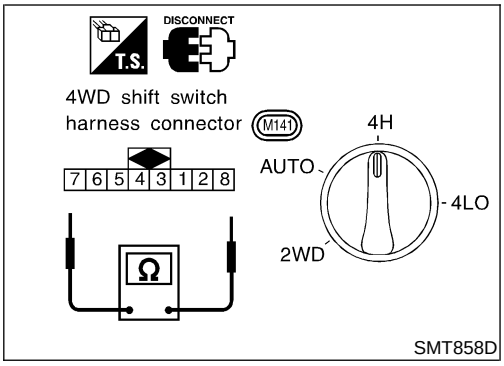

4WD Shift Switch

NBTF0038S01

Check continuity between each terminal.

Terminals	Switch position	Continuity
1 - 2	2WD	Yes
	Except 2WD	No
1 - 3, 1 - 4	AUTO	Yes
	Except AUTO	No
1 - 4, 1 - 5	4H	Yes
	Except 4H	No
1 - 4, 1 - 6	4LO	Yes
	Except 4LO	No

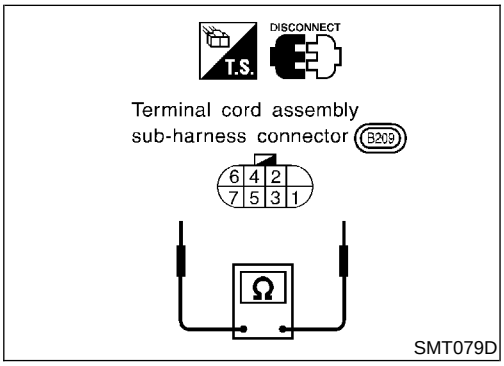

2-4WD Shift Solenoid Valve and Transfer Fluid Temperature Sensor

NBTF0038S02

Measure resistance between terminals of transfer terminal cord assembly sub-harness connector located on rear-right of transfer unit.

Component parts	Terminals	Resistance
2-4WD shift solenoid valve	4 - 5	Approx. 20°C (68°F): Approx. 22.8 - 25.2Ω
Transfer fluid temperature sensor	2 - 3	Approx. 20°C (68°F): Approx. 2.5 kΩ Approx. 80°C (176°F): Approx. 0.3 kΩ

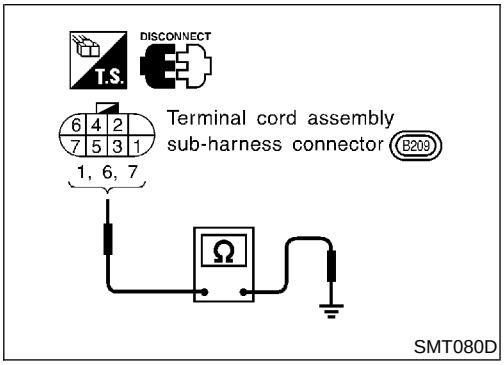

4WD Solenoid Valve, Clutch Pressure Switch and Line Pressure Switch

NBTF0038S03

Measure resistance between terminals of transfer terminal cord assembly sub-harness connector located on rear-right of transfer unit.

Component parts	Terminals		Remarks
4WD solenoid valve	6	Ground terminal	Approx. 20°C (68°F): Approx. 3.0 - 3.4Ω
Clutch pressure switch	7		In room temperature ● 2-4WD shift solenoid valve "OFF": No continuity ● 2-4WD shift solenoid valve and transfer motor "ON": Continuity exists
Line pressure switch	1		In room temperature ● Turn ignition switch to "OFF" position and leave vehicle for more than 5 minutes. (OFF): No continuity ● Transfer motor "ON": Continuity exists

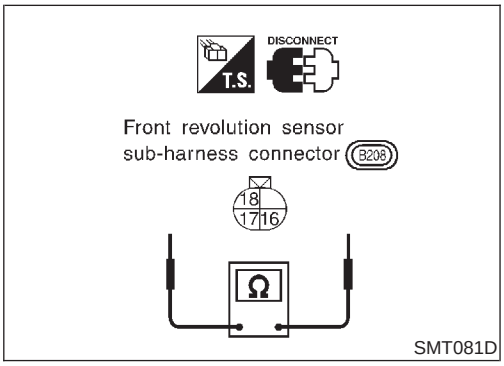

Front Revolution Sensor

NBTF0038S04

Measure resistance between terminals of front revolution sensor sub-harness connector located on rear-right of transfer unit.

Terminals	Resistance
16 - 17	500 - 650Ω
18 - 17	No continuity
18 - 16	No continuity

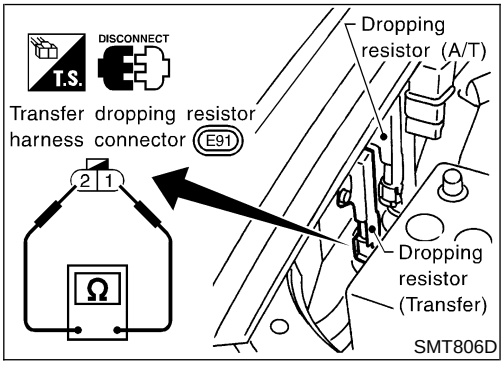

Transfer Dropping Resistor

NBTF0038S07

Check resistance between terminals.

Resistance: 11.2 - 12.8 Ω

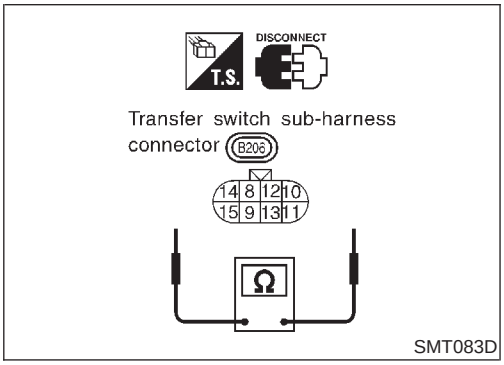

ATP Switch, Neutral-4LO Switch and Wait Detection Switch

NBTF0038S06

Measure resistance between terminals of transfer switch assembly sub-harness connector located on rear-right of transfer unit.

Switch	Terminals	4WD shift switch position		
		4H	(N)	4LO
ATP switch	8 - 9	No continuity	Continuity	No continuity
Neutral-4LO switch	12 - 13	No continuity	Continuity	
Wait detection switch	10 - 11	No continuity		Continuity
		(Note) ← -		

NOTE:
When shifting from "4LO" to "4H", continuity exists while "Wait" function is operating. (No continuity exists when "Wait" function is canceled.)

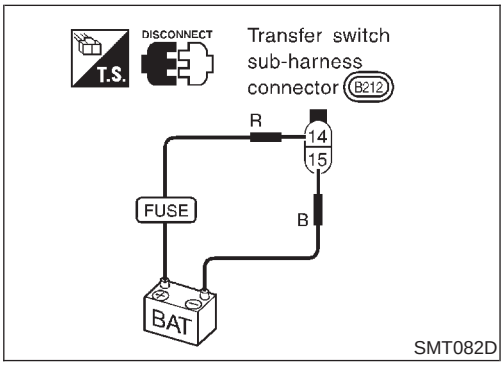

SMT082D

Transfer Motor

NBTF0038S05

Apply battery voltage directly to transfer motor assembly sub-harness connector located on rear-right of transfer unit. (Positive: Terminal 14, Negative: Terminal 15)
Transfer motor should operate.

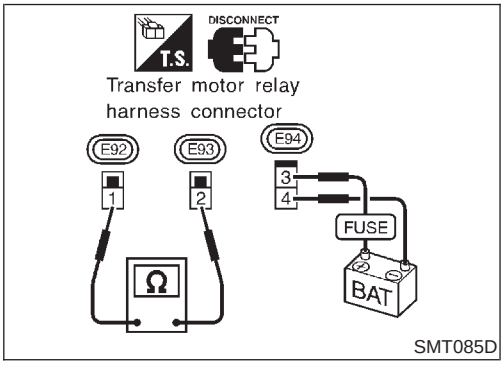

SMT085D

Transfer Motor Relay

NBTF0038S08

1. Apply battery voltage directly to terminals 3 and 4.
2. Check continuity between terminals 1 and 2.

Condition	Continuity (1 - 2)
Battery voltage is applied	Yes
No voltage is applied	No

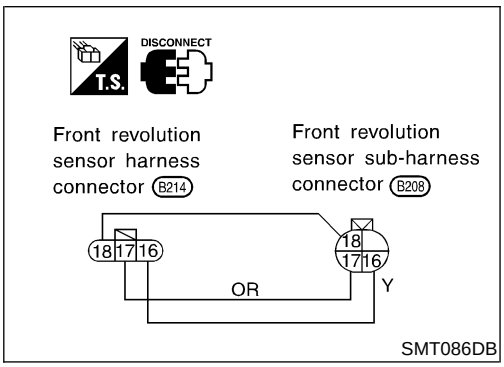

SMT086DB

Transfer Sub-harness

NBTF0038S09

FRONT REVOLUTION SENSOR SUB-HARNESS CONNECTOR

NBTF0038S0901

Check continuity between terminals shown in the figure.

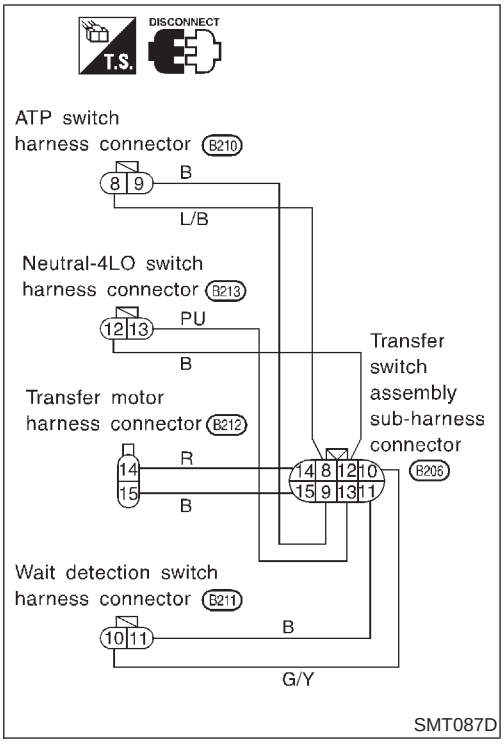

TRANSFER SWITCH ASSEMBLY SUB-HARNESS CONNECTOR

NBTF0038S0902

Check continuity between terminals shown in the figure.

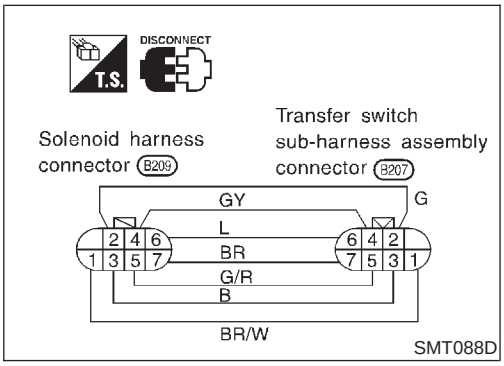

TRANSFER TERMINAL CORD ASSEMBLY SUB-HARNESS CONNECTOR

NBTF0038S0903

Check continuity between terminals shown in the figure.

Terminals on solenoid valve

Terminals	Components
6	4WD solenoid valve
4, 5	2-4WD shift solenoid valve
2, 3	Transfer fluid temperature sensor
7	Clutch pressure switch
1	Line pressure switch

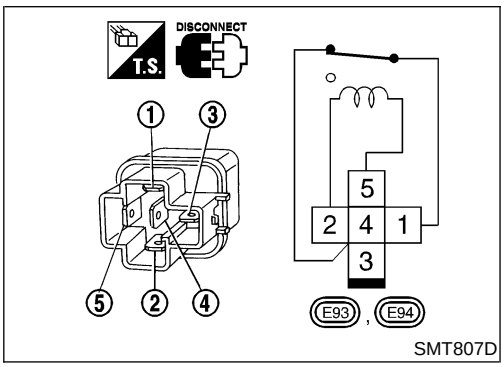

Transfer Shift Relay (High & low)

NBTF0038S10

Check continuity between terminals 3 and 4.

Condition	Continuity
12V direct current supply between terminals 1 and 2	No
No current supply	Yes

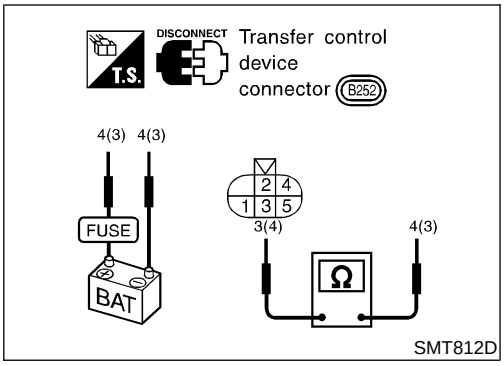

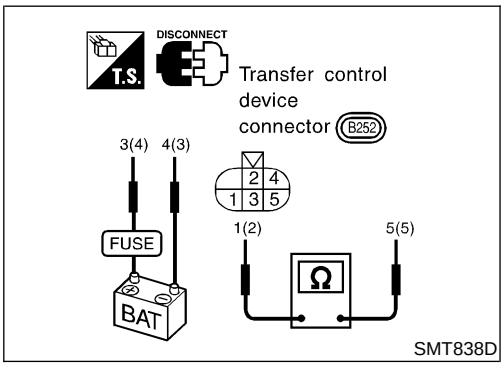

Actuator & Actuator Position Switch

NBTF0038S11

ACTUATOR

NBTF0038S1101

Operation & resistance check

- Apply battery voltage directly to actuator assembly.

Operating check	Battery positive terminal	Battery negative terminal
1	4	3
2	3	4
Check	Approx. 0.2Ω (When the motor is not operated.)	

ACTUATOR POSITION SWITCH

NBTF0038S1102

Continuity check

Continuity check	Battery positive terminal	Battery negative terminal	Continuity
1	4	3	1 - 5
2	3	4	2 - 5

Replacing Oil Seal

NBTF0068

FRONT CASE OIL SEAL

NBTF0068S01

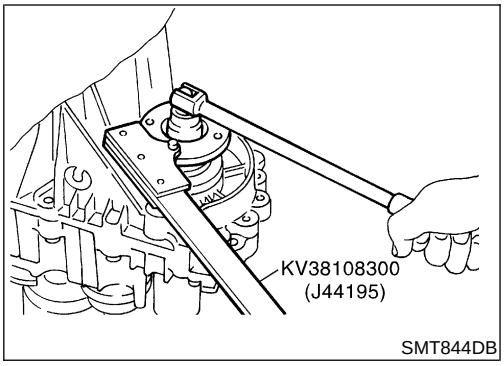

SMT844DB

1. Drain transfer fluid.
2. Remove exhaust front tube and heat insulator. Refer to “Removal”, TF-119.
3. Remove front propeller shaft. Refer to PD-6, “Removal and Installation”.
4. Remove companion flange lock nut.
- **Do not reuse lock nut.**

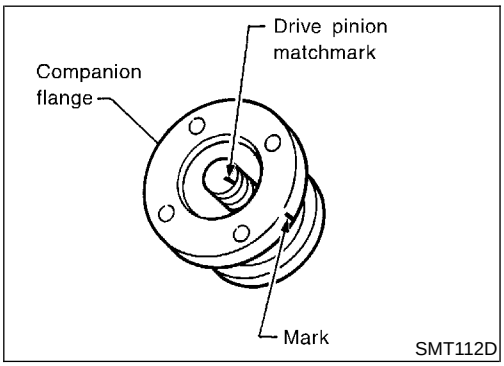

SMT112D

5. Put a matchmark on top of drive pinion thread. The mark should be in line with the mark on the companion flange.
- **Always mark top of drive pinion screw using paint.**

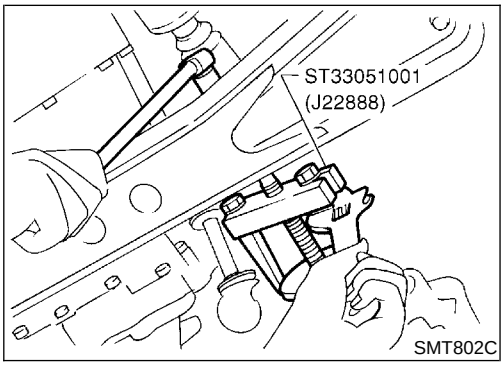

SMT802C

6. Remove companion flange.

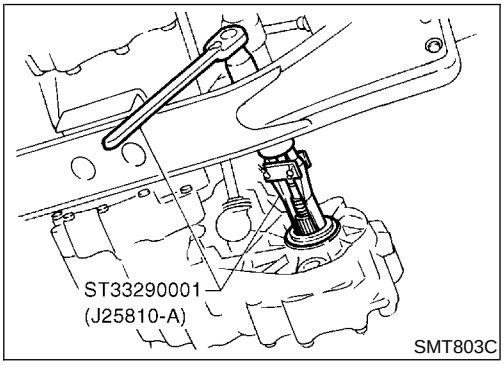

SMT803C

7. Remove front case oil seal.
8. Install front case oil seal.
- **Before installing, apply multi-purpose grease to seal lip.**
9. Install companion flange.

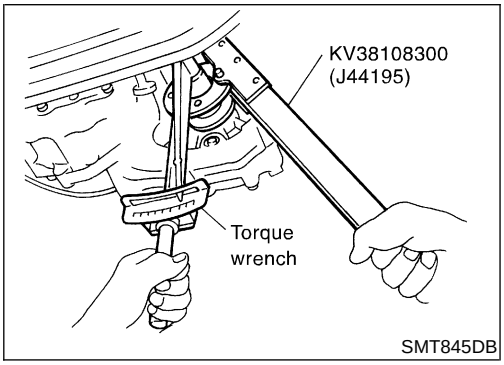

SMT845DB

10. Tighten nut to the specified torque.
    Refer to TF-121.
11. Install front propeller shaft.

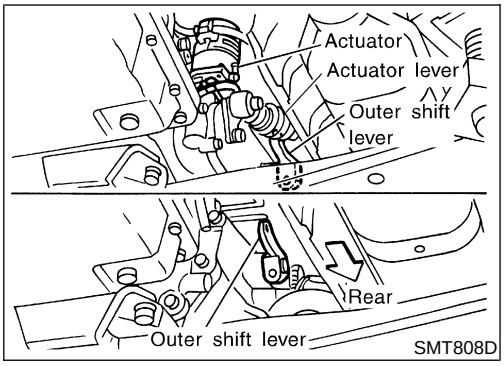

SHIFT SHAFT OIL SEAL

NBTF0068S02

1. Remove front propeller shaft. Refer to PD-6, "Removal and Installation".
2. Remove companion flange. Refer to "FRONT CASE OIL SEAL", TF-116.
3. Remove actuator lever from transfer outer shift lever. Then remove outer shift lever.

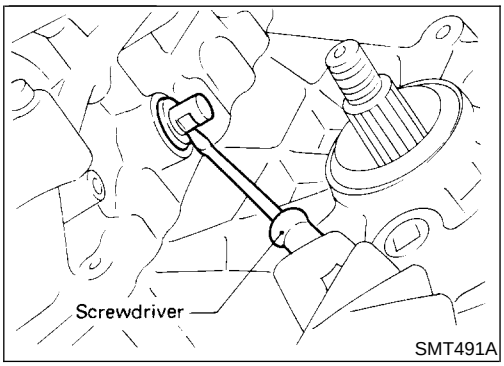

4. Remove shift shaft oil seal.
- **Be careful not to damage cross shaft.**

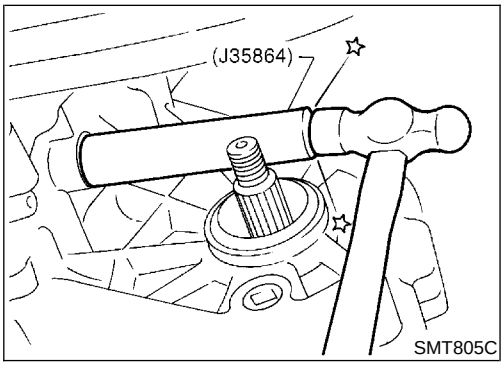

5. Install shift shaft oil seal.
- **Before installing, apply multi-purpose grease to seal lip.**
6. Install transfer control linkage.
7. Install companion flange. Refer to "FRONT CASE OIL SEAL", TF-116.
8. Install front propeller shaft.

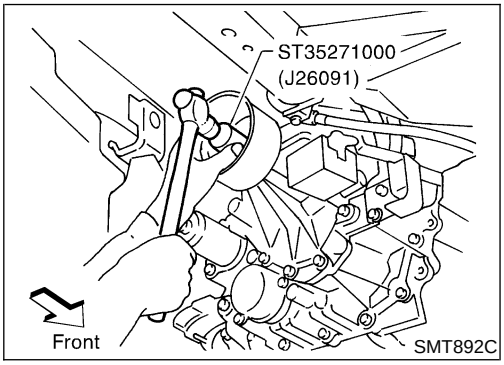

REAR OIL SEAL

NBTF0068S03

1. Remove rear propeller shaft. Refer to PD-6, "Removal and Installation".
2. Remove rear oil seal.
3. Install rear oil seal.
- **Before installing, apply multi-purpose grease to seal lip.**
4. Install rear propeller shaft.

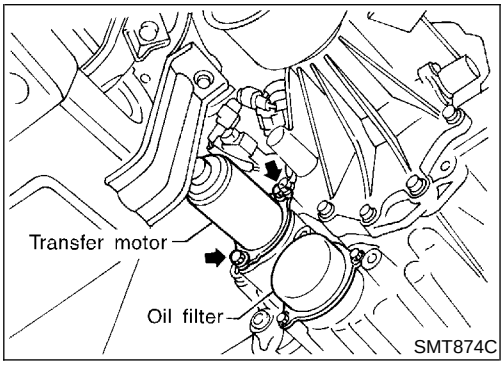

Transfer Motor

REMOVAL

NBTF0069

1. Disconnect transfer motor harness connector.
2. Remove breather pipe from transfer motor.
3. Remove bolts to detach transfer motor.
- **After removing transfer motor, be sure to replace O-ring with new one.**

INSTALLATION

NBTF0070

1. Apply petroleum jelly or ATF to O-ring.

2. Align width across flat-notch with oil pump groove, and install transfer motor.
3. Tighten bolts.
   : 41 - 48 N·m (4.2 - 4.9 kg-m, 30 - 35 ft-lb)
4. Install breather pipe to transfer motor.
5. Connect transfer motor harness connector.

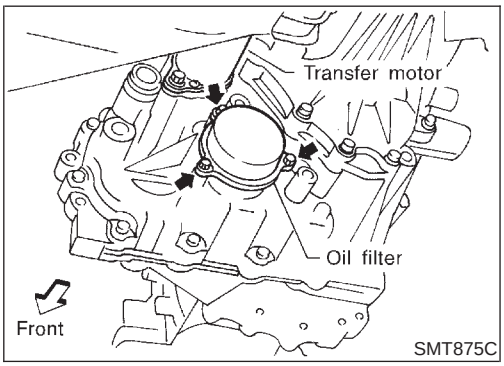

Transfer Oil Filter

REMOVAL

NBTF0071

- Remove bolts to detach oil filter.
- **When removing oil filter from transfer, avoid damaging it. Be sure to loosen bolts evenly.**
- **When removing oil filter, be sure to replace O-ring with new one.**

INSTALLATION

NBTF0072

1. Apply petroleum jelly or ATF to O-ring.
2. Tighten bolts evenly to install oil filter.
   : 7 - 9 N·m (0.7 - 0.9 kg-m, 61 - 78 in-lb)
- **Be sure not to damage oil filter.**

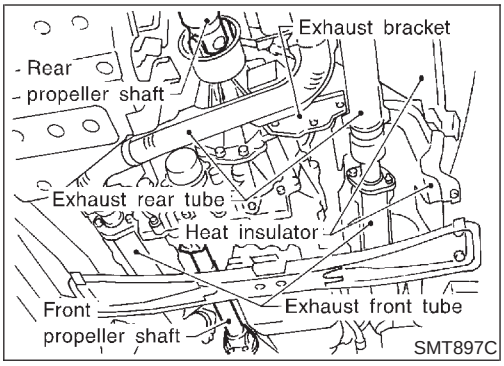

Removal

NBTF0073

1. Remove exhaust front and rear tubes. Refer to FE-8, “EXHAUST SYSTEM”.
2. Remove front and rear propeller shaft. Refer to PD-6, “Removal and Installation”.
3. Insert plug into rear oil seal after removing propeller shaft.

- **Be careful not to damage spline, sleeve yoke and rear oil seal, when removing propeller shaft.**

4. Disconnect neutral-4LO switch, front revolution sensor, ATP switch, transfer motor and 4WD shift switch harness connectors.
5. Remove center console and A/T control device.
6. Remove floor panel for transfer.
7. Remove upper side fixing bolt for A/T and TF.
8. Remove actuator lever from transfer outer shift lever and remove sub-oil pump from transfer.
9. Remove remaining fixing bolt for AT and TF.

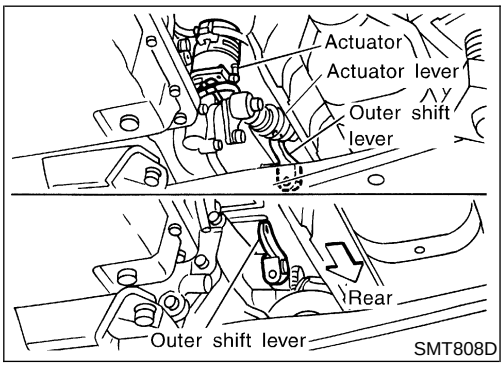

10. Remove transfer from transmission.

WARNING:
Support transfer while removing it.

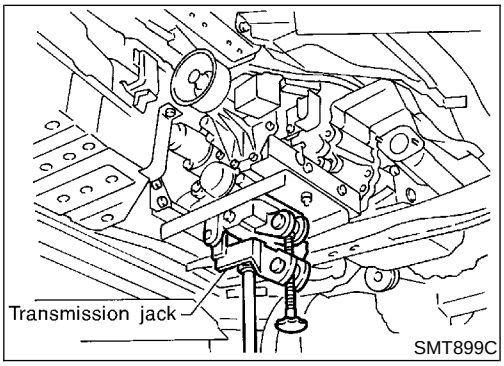

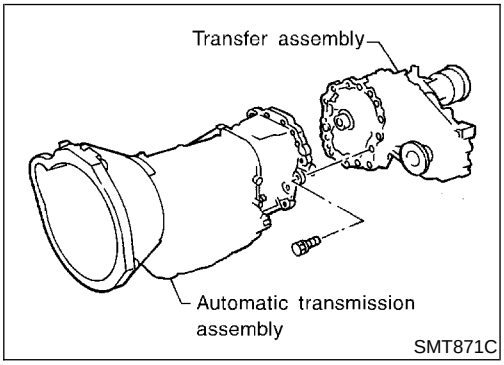

Installation

NBTF0074

- Tighten bolts securing transfer.

Bolt length:
45 mm (1.77 in)
Tightening torque:
: 31 - 42 N·m (3.2 - 4.3 kg-m, 23 - 31 ft-lb)

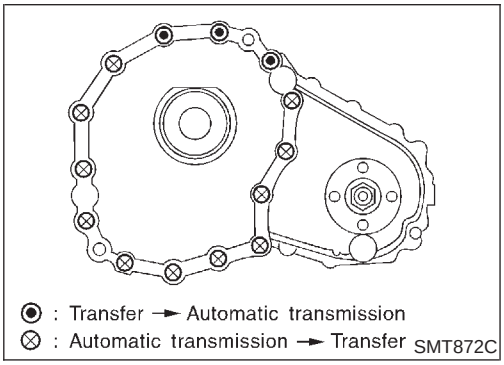

Transfer Gear Control

NBTF0075

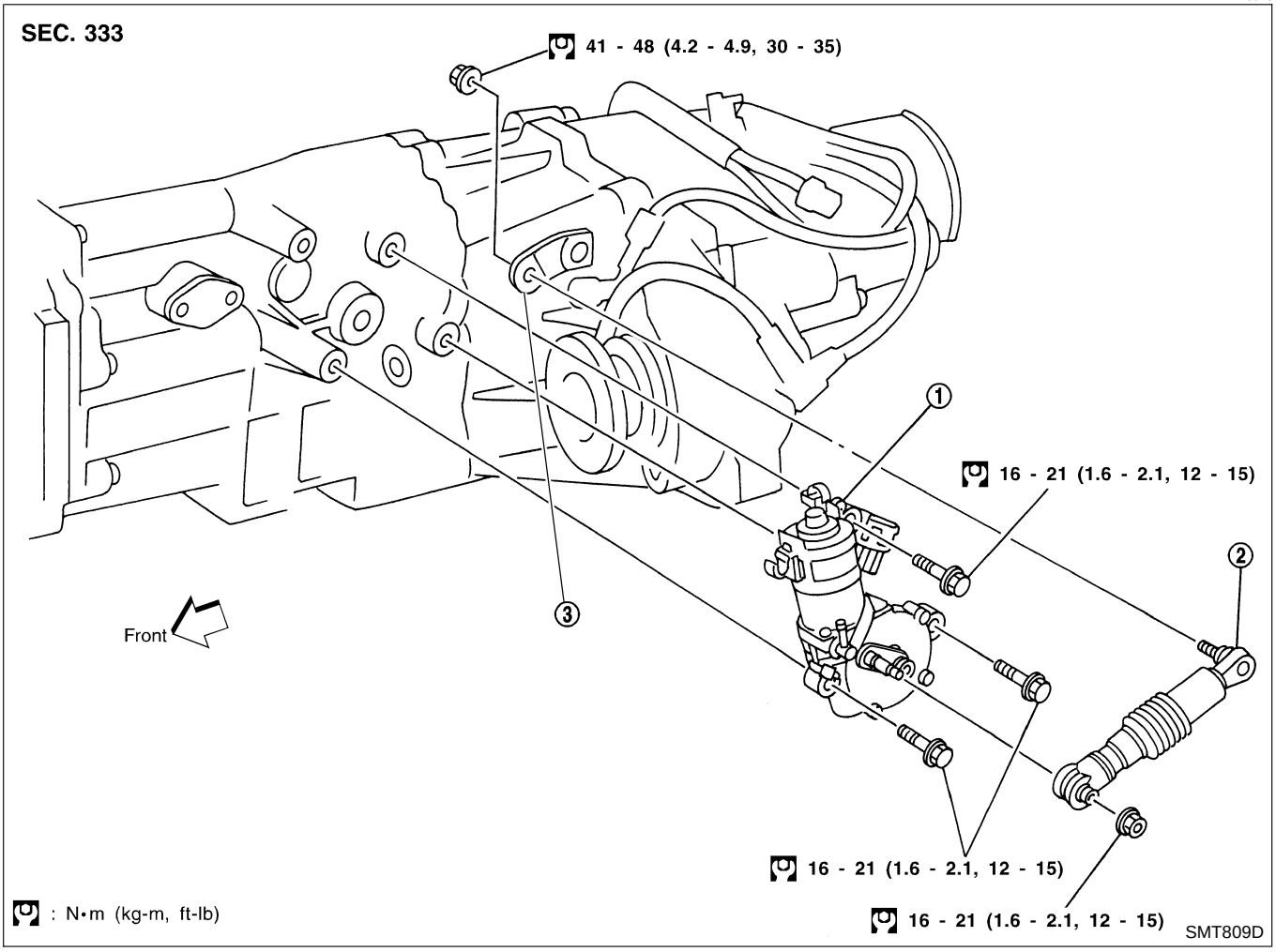

1. Actuator
2. Actuator lever
3. Outer shift lever

Transfer Components

NBTF0076

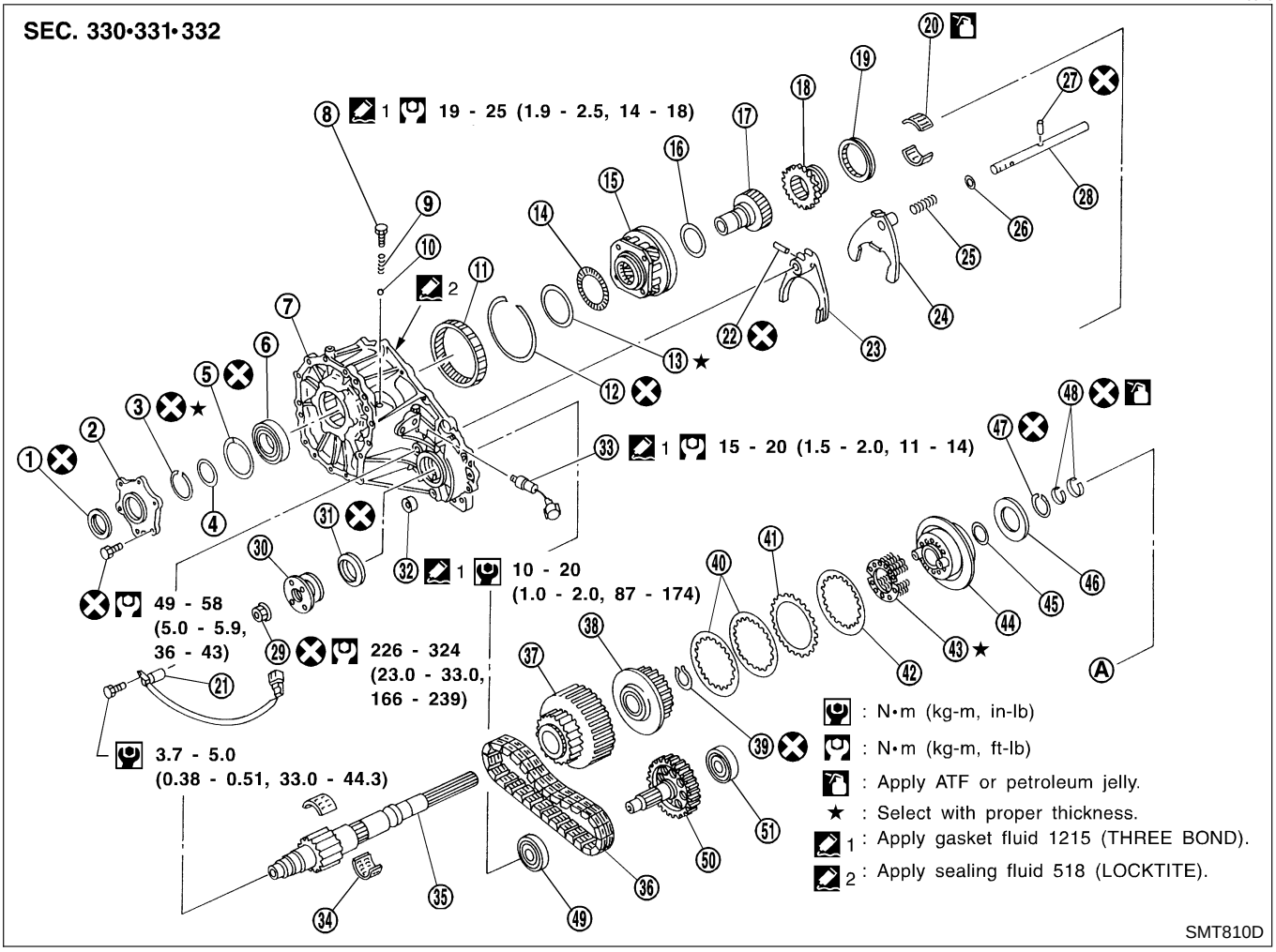

1. Oil seal
2. Transfer cover
3. Snap ring
4. Washer
5. Snap ring
6. Main gear bearing
7. Front case
8. Check plug
9. Check spring
10. Check ball
11. Internal gear
12. Snap ring
13. Bearing race
14. Thrust needle bearing
15. Planetary carrier
16. Thrust needle bearing
17. Sun gear
18. L-H sleeve
19. 2-4 sleeve
20. Radial needle bearing
21. Front revolution sensor
22. Roll pin
23. L-H fork
24. 2-4 fork
25. Shift fork spring
26. Fork guide
27. Roll pin
28. Shift rod
29. Self-lock nut
30. Companion flange
31. Oil seal
32. Drain plug
33. Wait detection switch
34. Needle bearing
35. Mainshaft
36. Drive chain
37. Clutch drum
38. Clutch hub
39. Snap ring
40. Driven plate
41. Drive plate
42. Retaining plate
43. Return spring assembly
44. Press flange
45. Washer
46. Thrust needle bearing
47. Snap ring
48. Seal ring
49. Front bearing
50. Front drive shaft
51. Rear bearing

Transfer Components (Cont'd)

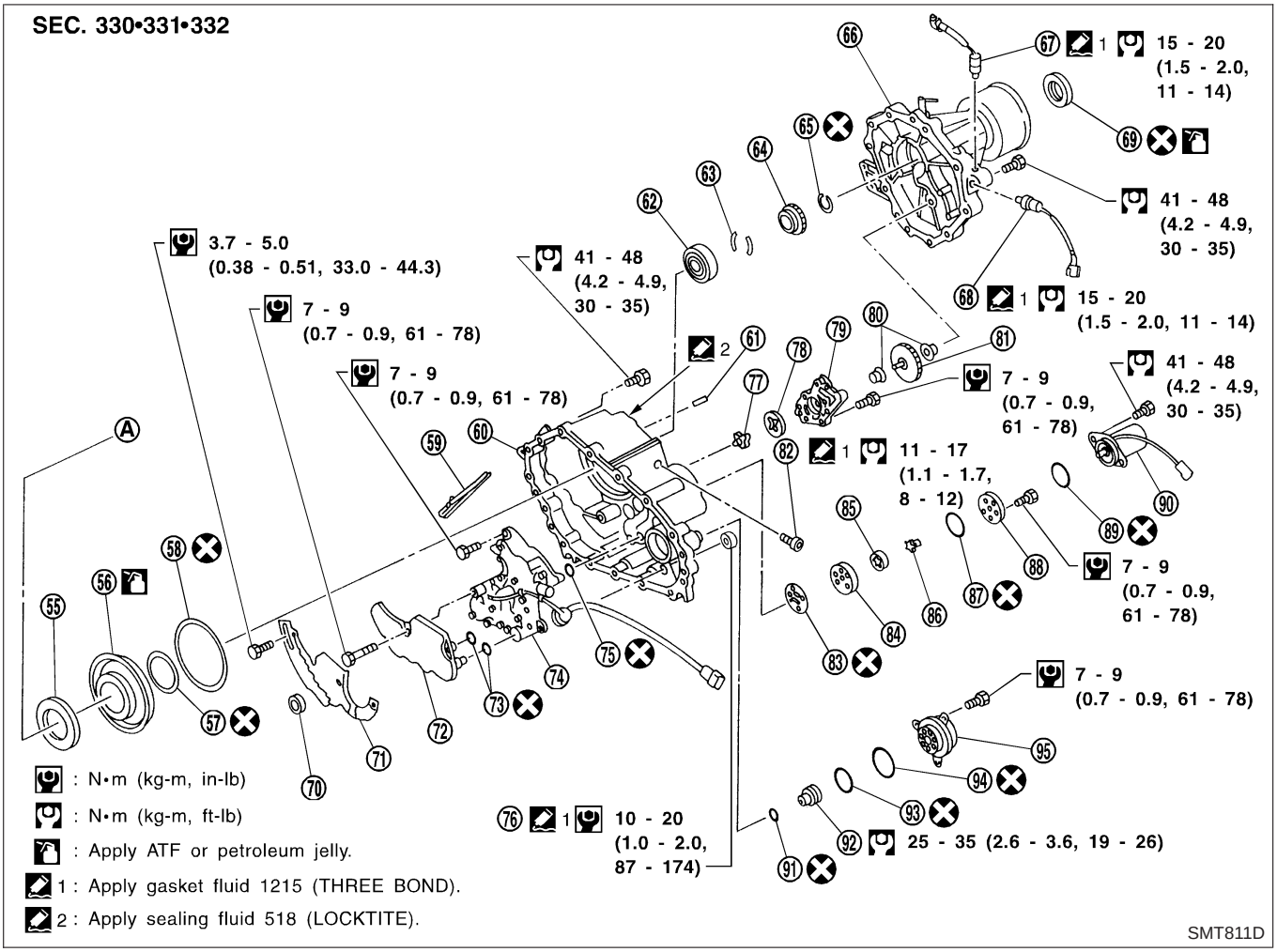

55. Thrust needle bearing race
56. Clutch piston
57. D-ring
58. Lip seal
59. Oil gutter
60. Center case
61. Stem bleeder
62. Mainshaft rear bearing
63. Thrust washer
64. Speedometer drive gear
65. Snap ring
66. Rear case
67. ATP switch
68. Neutral-4LO switch
69. Oil seal
70. Magnet
71. Baffle plate
72. Oil strainer
73. O-ring
74. Control valve assembly
75. Lip seal (7 pieces)
76. Filler plug
77. Inner gear
78. Outer gear
79. Oil pump housing
80. Bushing
81. Oil pump shaft
82. Oil pressure check plug
83. Oil pump gasket
84. Sub-oil pump housing
85. Outer gear
86. Inner gear
87. O-ring
88. Sub-oil pump cover
89. O-ring
90. Transfer motor
91. O-ring
92. Oil filter stud
93. O-ring
94. O-ring
95. Oil filter

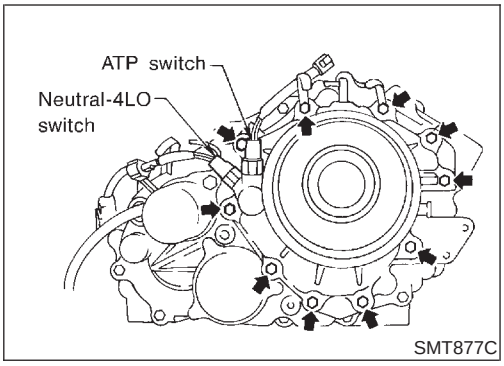

Rear Case

DISASSEMBLY

NBTF0077

1. Remove neutral-4LO switch and ATP switch.
2. Remove bolts.

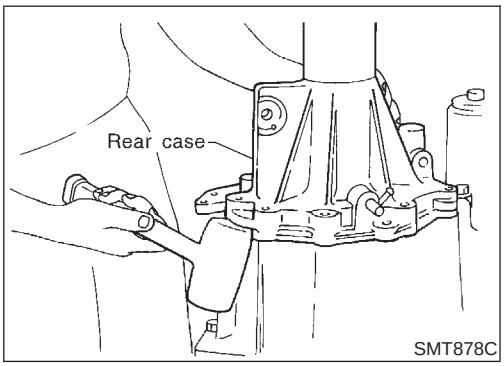

3. Remove rear case from center case by tapping it lightly with a plastic hammer.

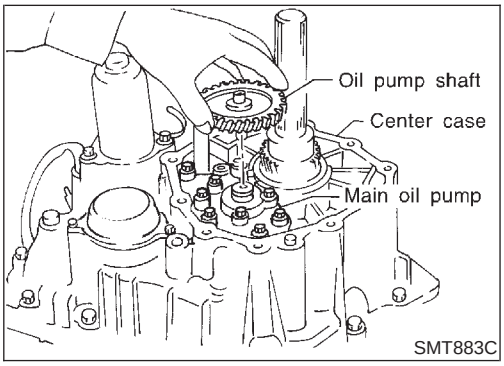

Center Case

DISASSEMBLY

NBTF0078

1. Remove oil pump shaft from main oil pump.

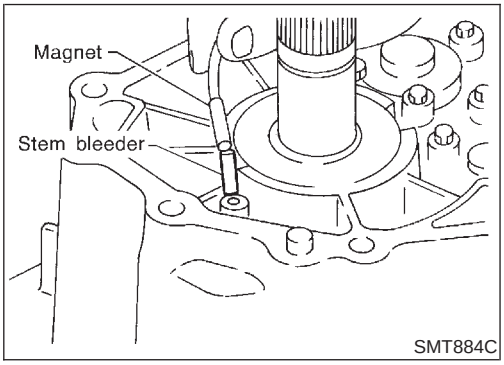

2. Remove stem bleeder from bleeder hole.

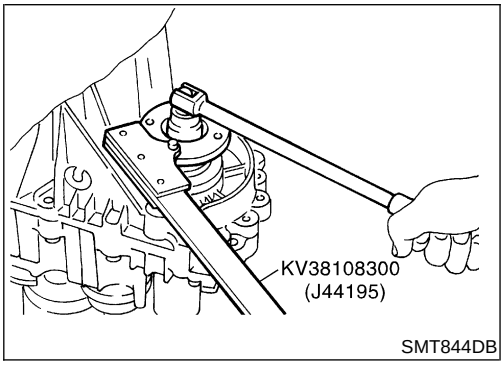

3. Remove lock nut from companion flange.

- **Do not reuse lock nut.**

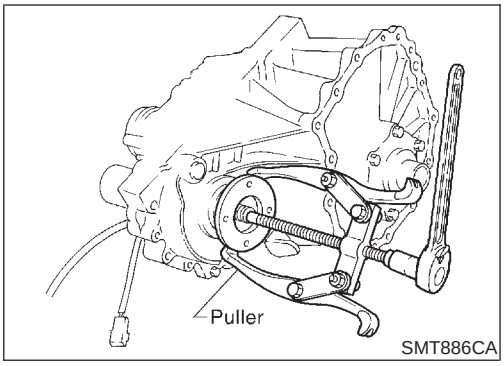

4. Remove companion flange.

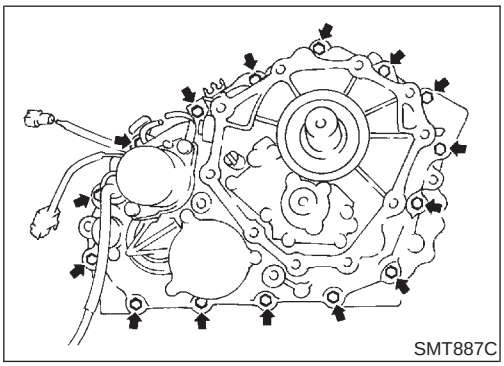

5. Remove bolts.

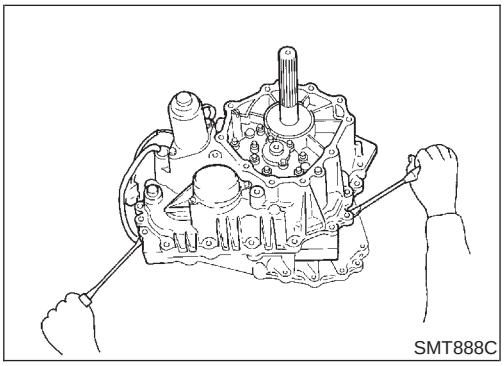

6. Insert screwdrivers as shown in the figure, and separate center case from front case. Then, remove center case by levering it up with a tire lever or the like.

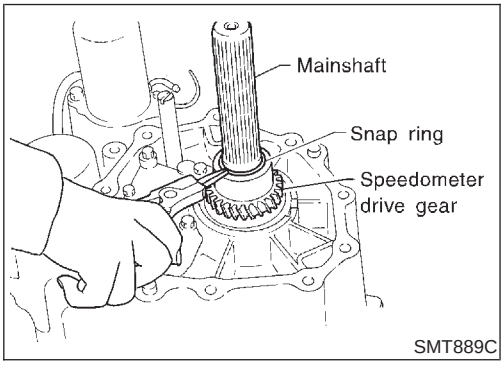

7. Remove snap ring from mainshaft.

- **Do not reuse snap ring.**

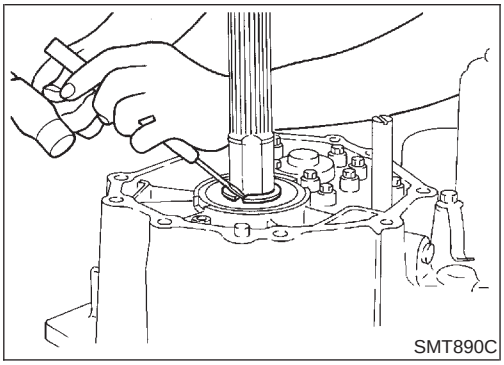

8. Remove C-rings from mainshaft bearing.

Front Drive Shaft and Drive Chain

NBTF0078S01

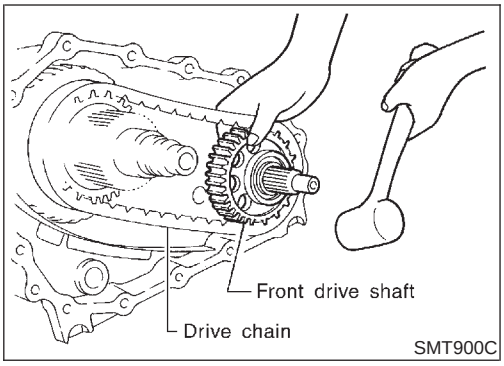

1. Remove oil gutter from center case.
2. With front drive shaft held by one hand as shown in the figure, tap center case with a plastic hammer to remove it with drive chain.

- **Do not tap drive chain with a plastic hammer.**

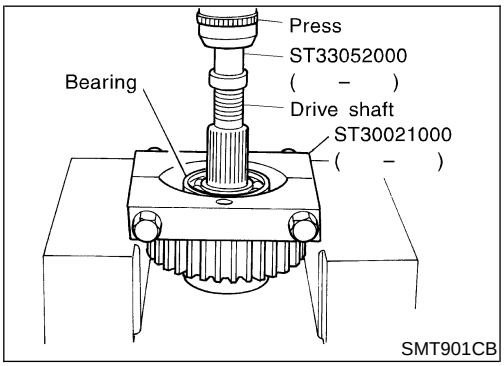

3. Set a puller (ST30021000) and an adapter (ST33052000). Remove front drive shaft front bearing.

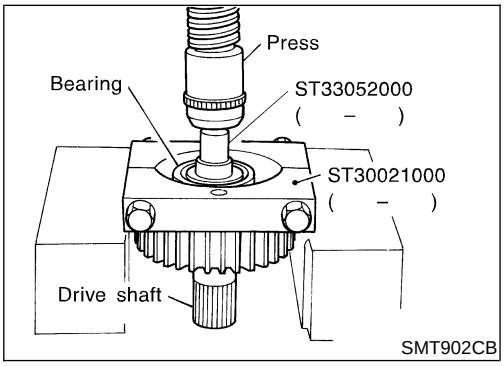

4. Set the puller (ST30021000) and the adapter (ST33052000). Remove front drive shaft rear bearing.

Mainshaft and Clutch Drum

NBTF0078S02

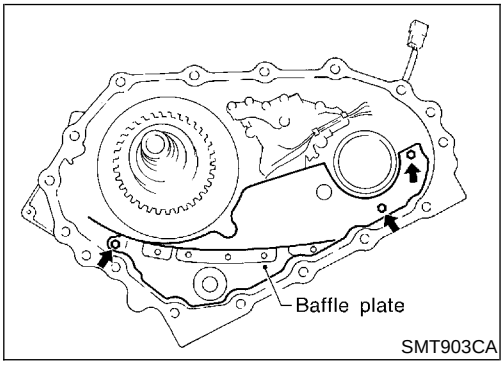

1. Remove mounting bolts to detach baffle plate.

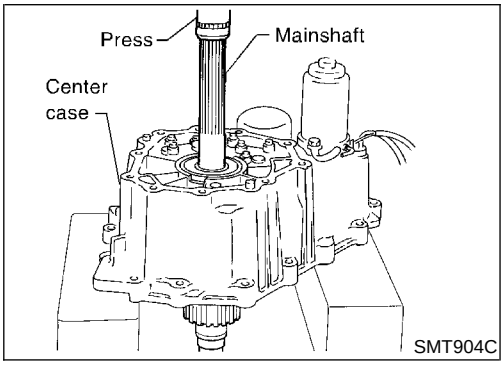

2. Set center case to press stand. Remove mainshaft from center case.

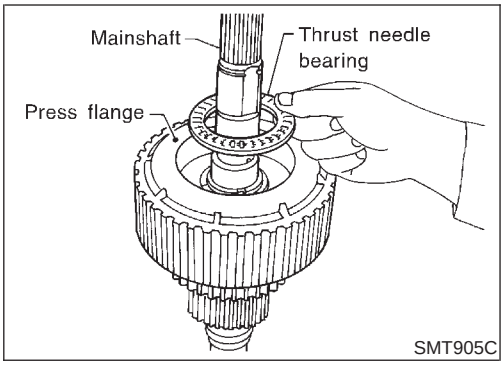

3. Remove thrust needle bearing from press flange.

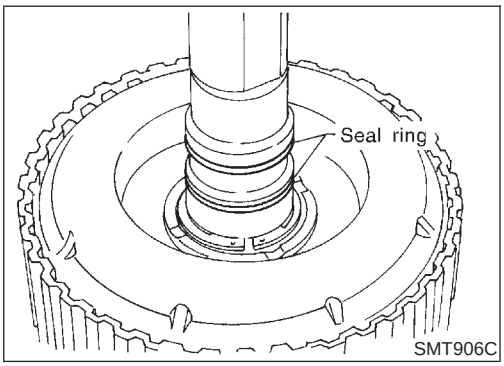

4. Remove seal ring from mainshaft.
- **Do not reuse seal ring.**

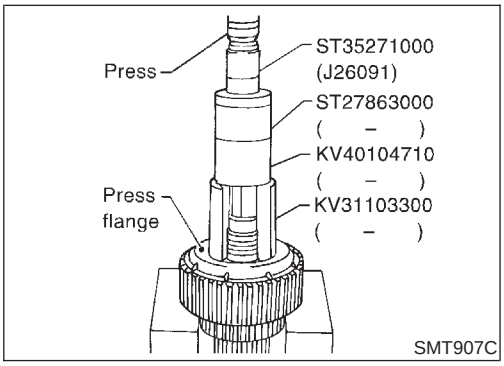

5. Set a drift (KV31103300), a support ring (KV40104710), a support ring (ST27863000) and a drift (ST35271000) to press flange as shown in the figure. Press drift until snap ring is out of place.

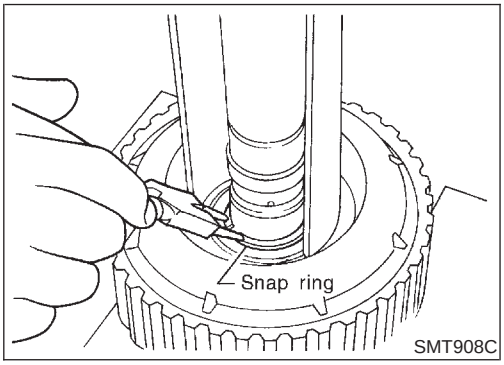

6. Remove snap ring from mainshaft.
- **Do not reuse snap ring.**

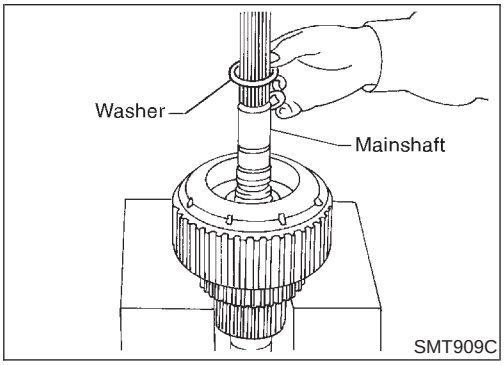

7. Remove washer.

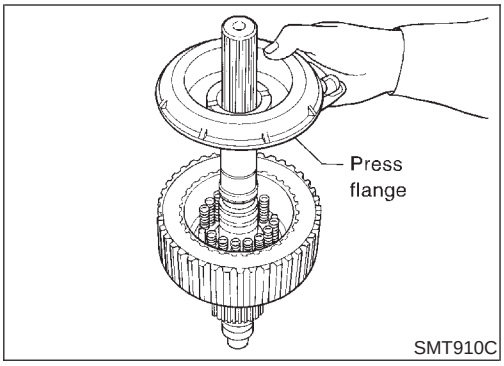

8. Remove press flange from mainshaft.

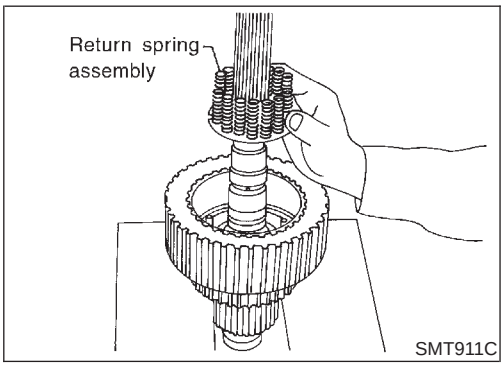

9. Remove return spring assembly from clutch hub.

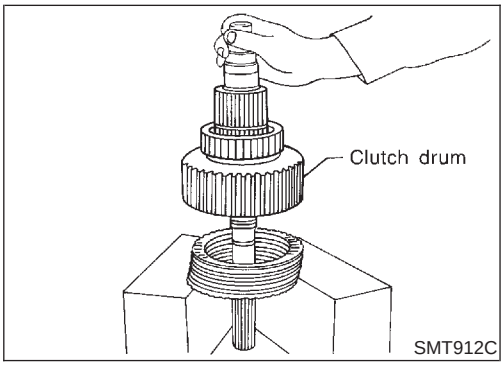

10. Remove each plate from clutch drum.

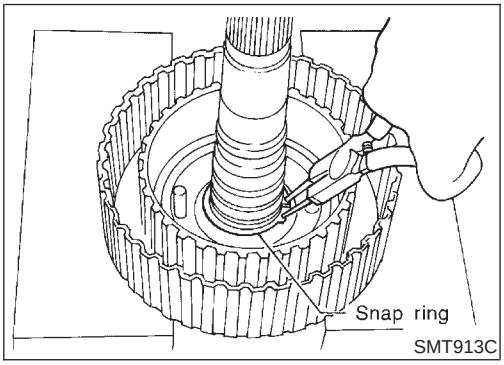

11. Remove snap ring from mainshaft.
- **Do not reuse snap ring.**

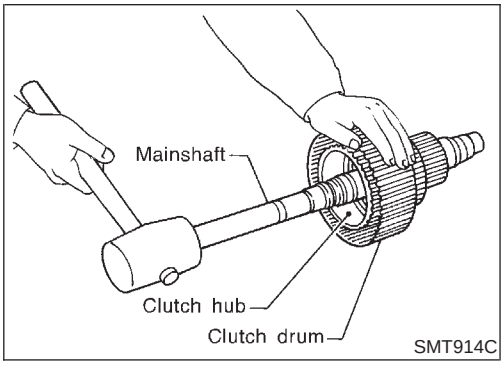

12. Tap mainshaft with a plastic hammer to remove it from clutch drum and clutch hub.
13. Remove needle bearing from mainshaft.

Clutch Piston

NBTF0078S03

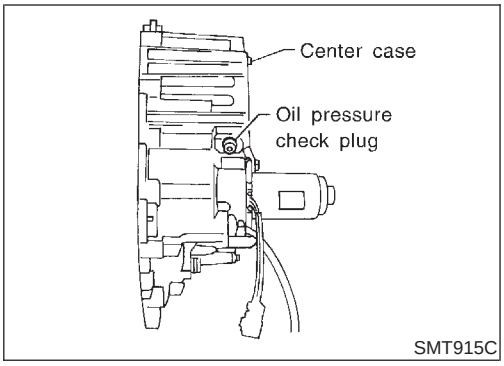

1. Remove oil pressure check plug from oil pressure check port.

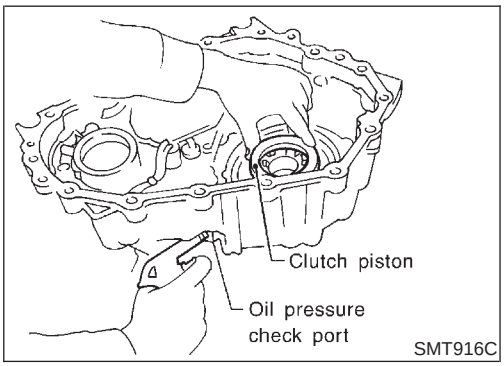

2. Apply air gradually from oil pressure check port, and remove clutch piston from center case.

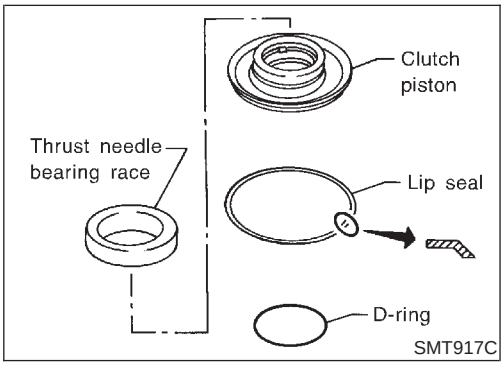

3. Remove lip seal and D-ring from clutch piston.

- **Do not reuse lip seal and D-ring.**

4. Remove thrust needle bearing race from clutch piston by hooking a screwdriver edge into 4 notches of thrust needle bearing race.

Control Valve

NBTF0078S04

CAUTION:

- **Do not reuse any part that has been dropped or damaged.**
- **Make sure valve is assembled in the proper direction.**
- **Do not use a magnet because residual magnetism stays during disassembly.**

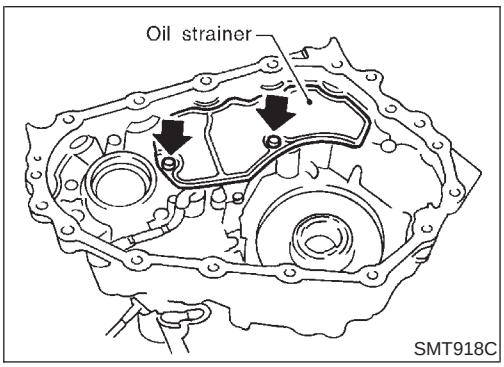

1. Remove bolts, and detach oil strainer.

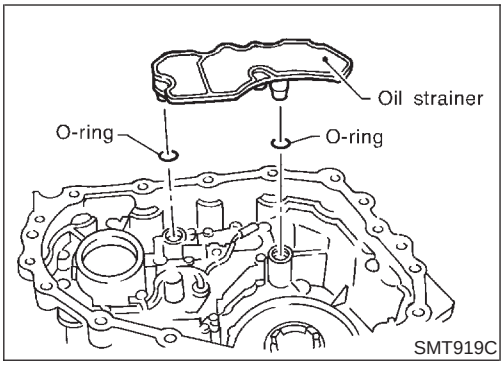

2. Remove O-rings from oil strainer.
- **Do not reuse O-rings.**

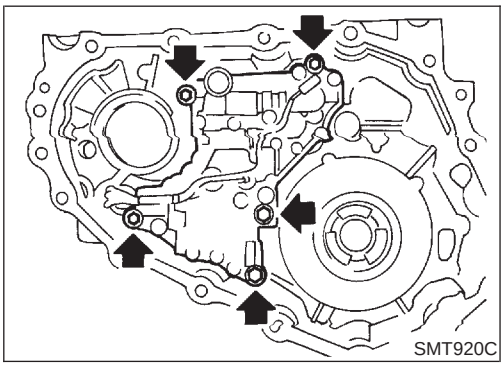

3. Remove bolts for control valve.

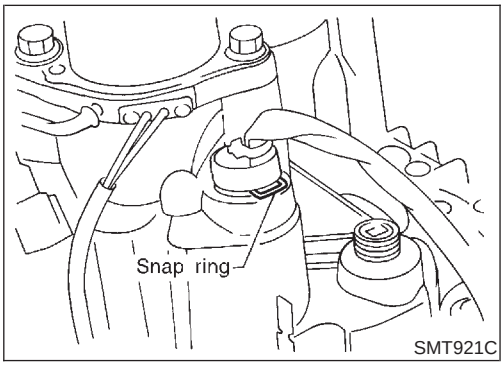

4. Remove snap ring. Then push terminal assembly into center case to remove control valve assembly.

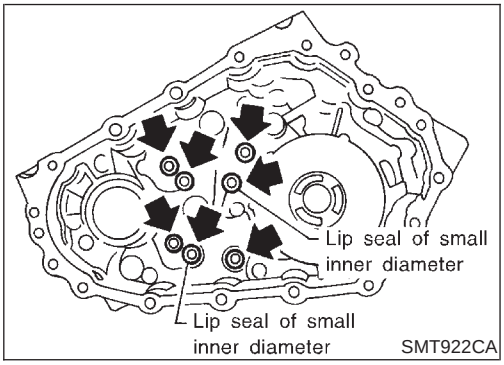

5. Remove lip seals from center case.
- **Do not reuse lip seals.**
- **There are two kinds of lip seals (lip seal of large inner diameter: 5 pieces, lip seal of small inner diameter: 2 pieces). Confirm the position before disassembly.**

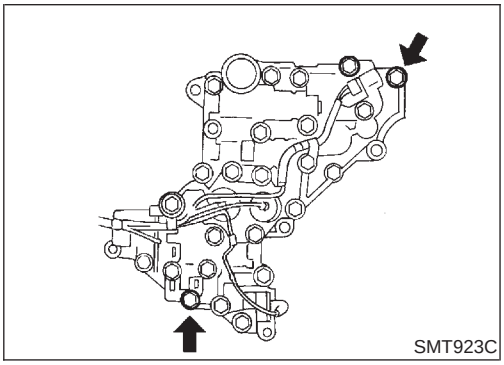

6. Remove all bolts except for two.

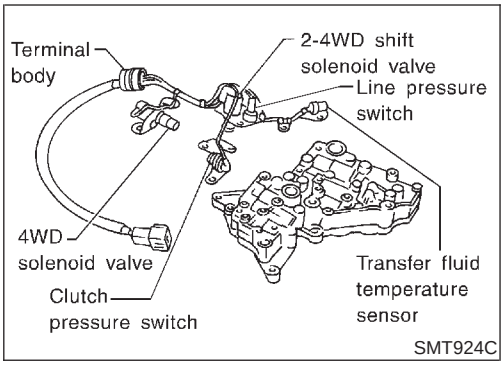

7. Remove 4WD solenoid valve, clutch pressure switch, 2-4WD shift solenoid valve, line pressure switch, and transfer fluid temperature sensor from control valve assembly.
8. Remove O-rings from each solenoid valve, switch and terminal body.

- **Do not reuse O-rings.**

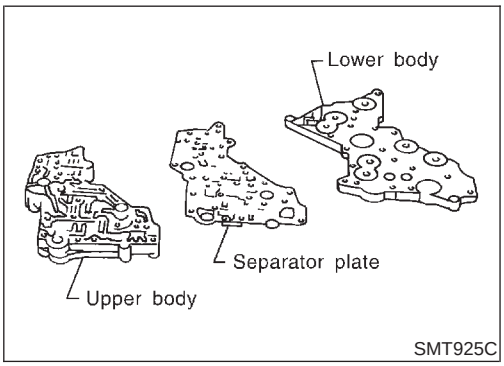

9. Place control valve with lower body facing up, remove two mounting bolts, and then remove lower body and separator plate from upper body.

CAUTION:

- **Be careful not to drop relief balls. Detach lower body carefully.**
- **Do not reuse separator plate.**

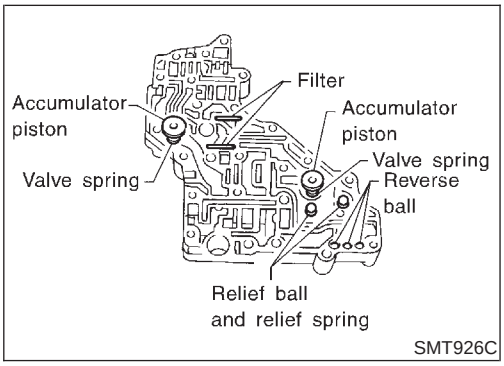

10. Make sure reverse balls, relief balls and relief springs, accumulator pistons, valve springs, and filters are securely installed as shown in the figure, and remove them.

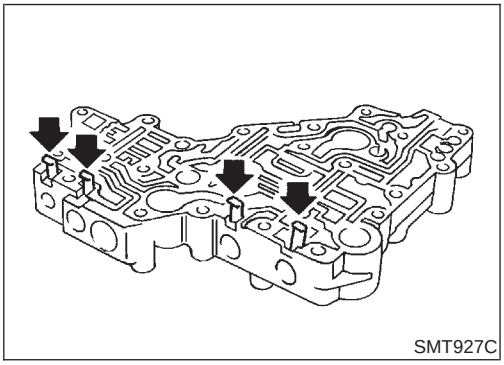

11. Remove retainer plates.

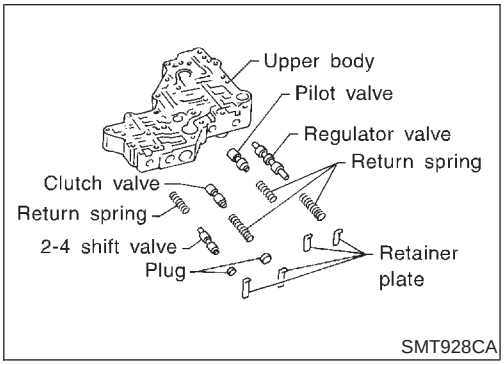

12. Remove each control valve, spring and plug.

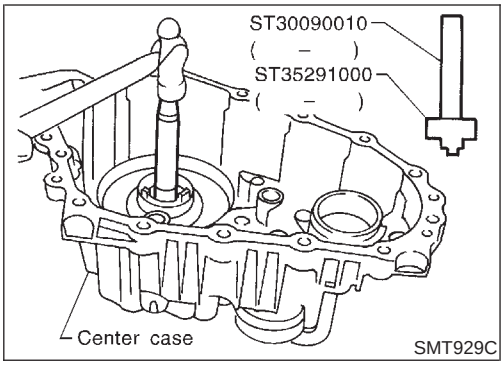

Mainshaft Rear Bearing

NBTF0078S05

1. Remove mainshaft rear bearing from center case using a remover (ST35291000) and a remover (ST30090010).

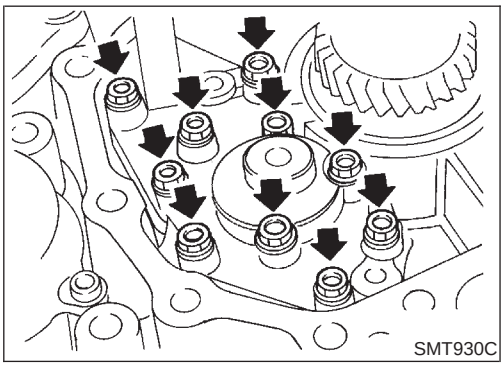

Main Oil Pump

NBTF0078S06

1. Remove bolts as shown in figure to detach main oil pump.

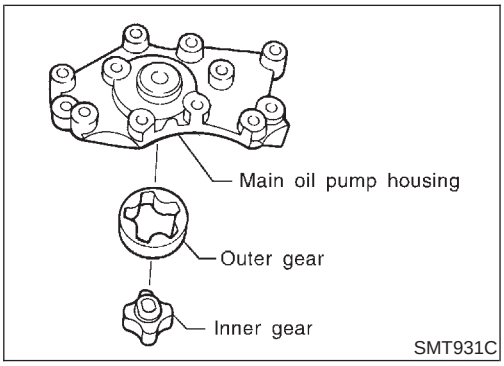

2. Remove outer gear and inner gear.

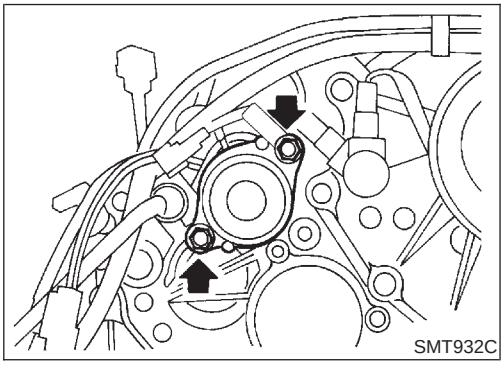

Sub-oil Pump

NBTF0078S07

1. Remove bolts to detach transfer motor from center case. Then remove O-ring from the transfer motor.

- **Do not reuse O-ring.**

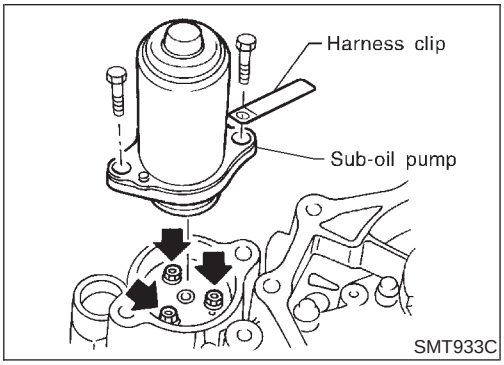

2. Remove sub-oil pump mounting bolts.

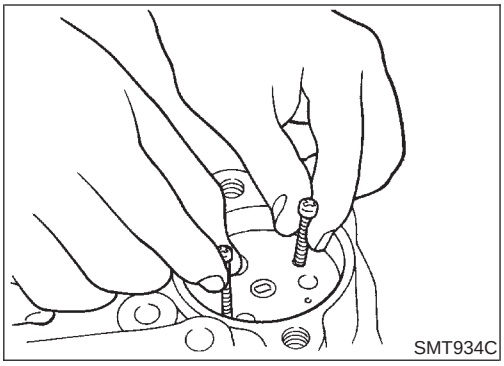

3. Thread two bolts (M4 x 0.8) into the holes of sub-oil pump as shown in the figure, and pull out to remove sub-oil pump.

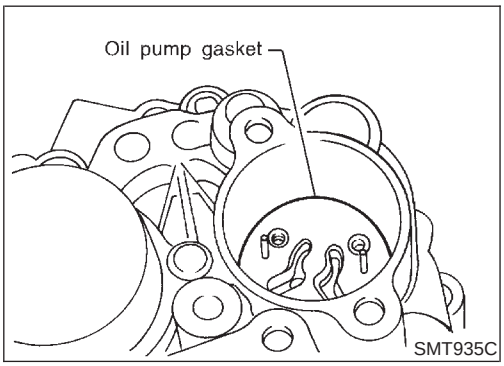

4. Remove oil pump gasket.
- **Do not reuse gasket.**

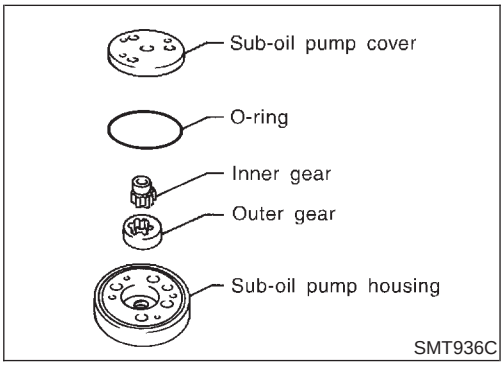

5. Remove sub-oil pump cover, outer gear, inner gear and O-ring from sub-oil pump housing.
- **Do not reuse O-ring.**

Oil Filter

NBTF0078S08

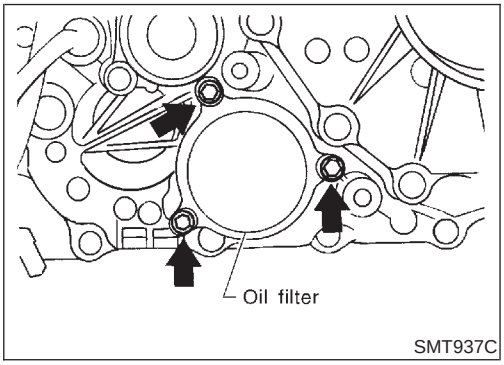

1. Remove bolts for oil filter.

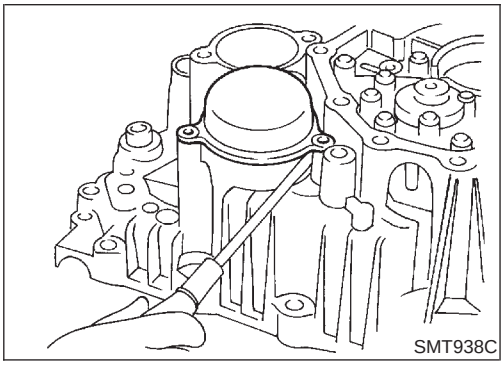

2. Insert a screwdriver as shown in the figure to remove oil filter.

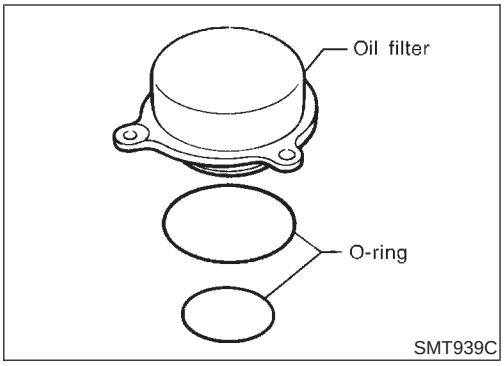

3. Remove O-rings from oil filter.
- **Do not reuse O-rings.**

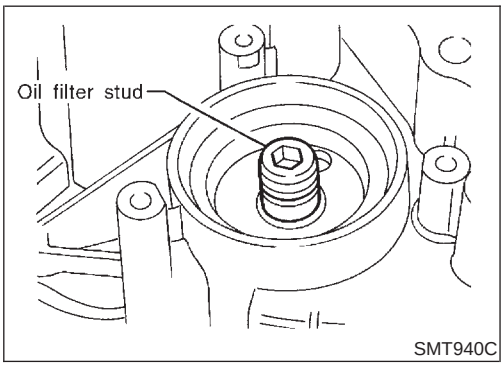

4. Remove oil filter stud.

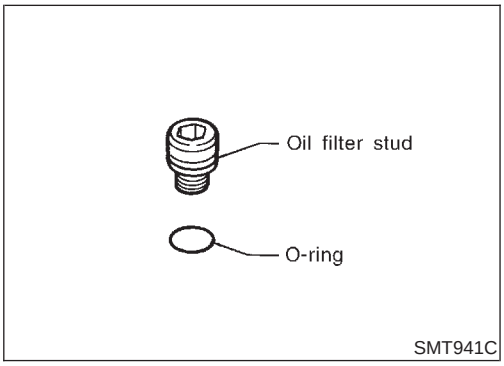

5. Remove O-ring from oil filter stud.
- **Do not reuse O-ring.**

Front Case

DISASSEMBLY

NBTF0079

1. Remove rear case from center case. Refer to TF-123.
2. Remove front case from center case.

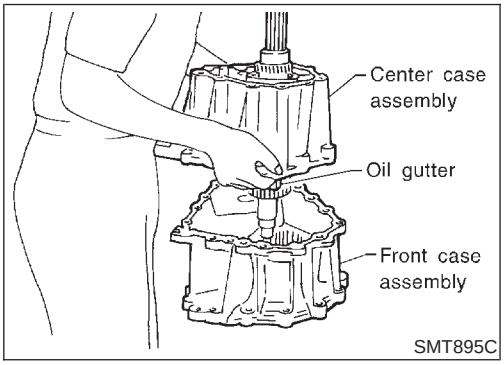

Shift Rod Components

NBTF0079S01

1. Remove check plug, then check spring and check ball.
2. Remove wait detection switch.

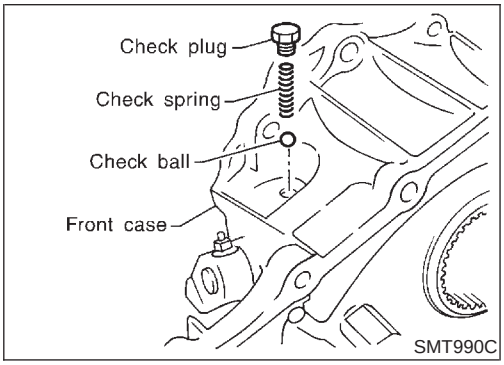

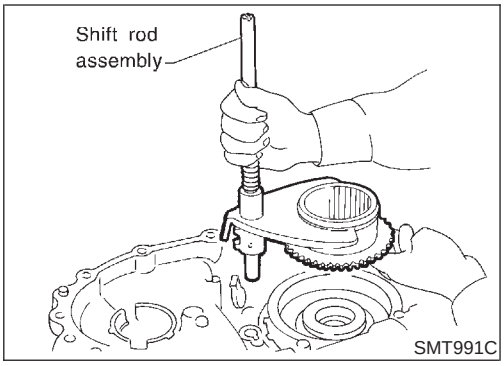

3. Remove shift rod components together with 2-4 sleeve and L-H sleeve.

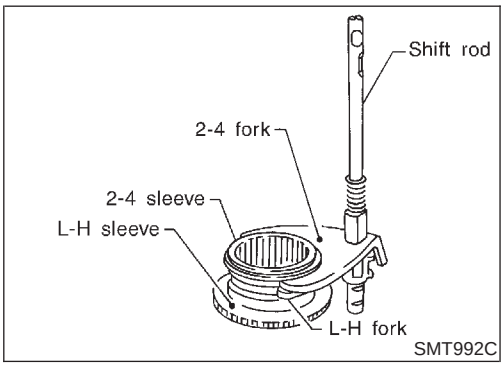

4. Remove 2-4 sleeve and L-H sleeve from 2-4 fork and L-H fork respectively.

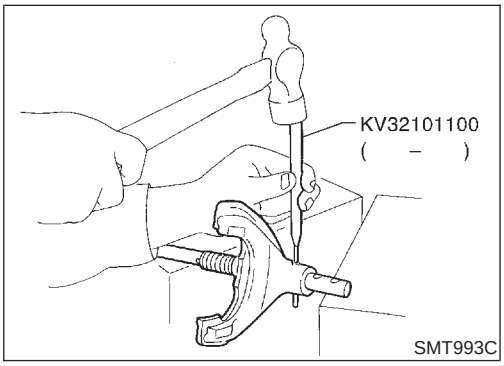

5. Drive out roll pin from shift rod.

- **Do not reuse roll pin.**

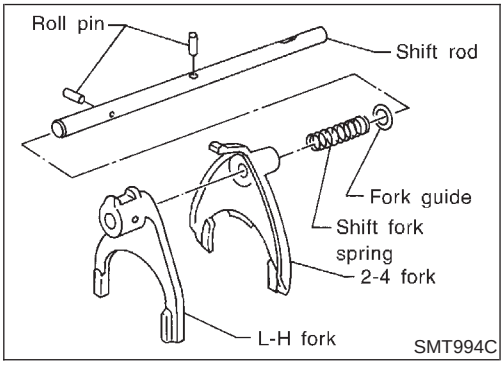

6. Remove L-H fork, 2-4 fork, shift fork spring and fork guide from shift rod.

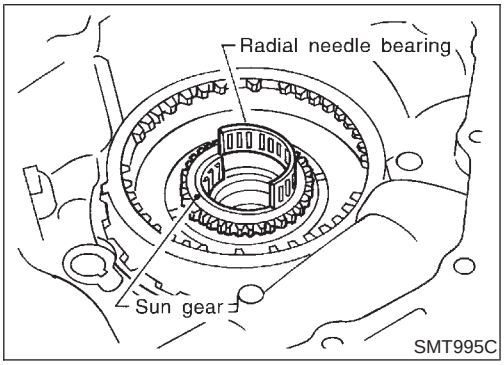

Planetary Carrier, Sun Gear and Internal Gear

NBTF0079S02

1. Remove radial needle bearing from sun gear.

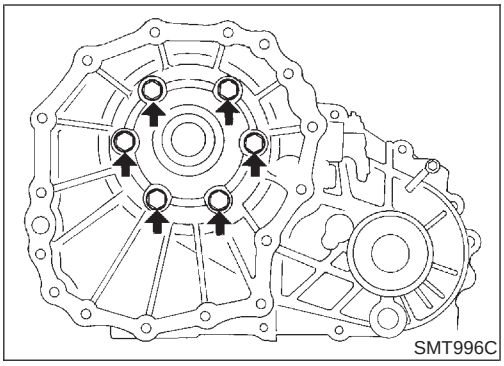
SMT996C

2. Remove bolts to detach transfer cover.
- **Do not reuse bolts.**

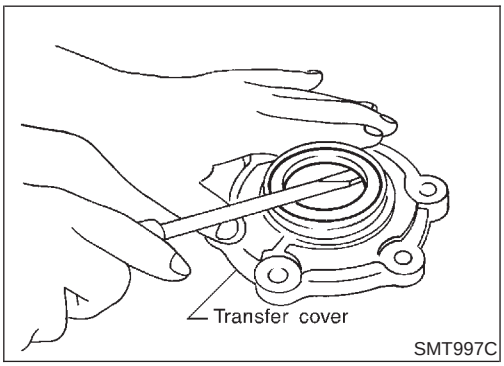

SMT997C

3. Remove oil seal from transfer cover.
- **Do not reuse oil seal.**

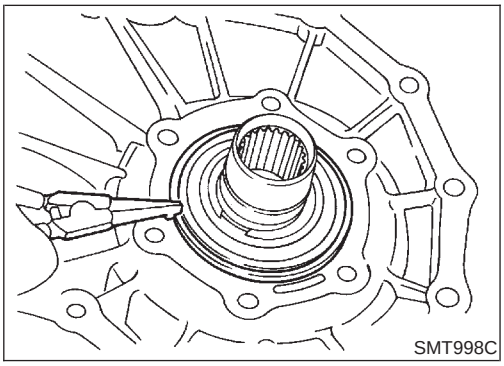
SMT998C

4. Remove snap ring from main gear bearing.
- **Do not reuse snap ring.**

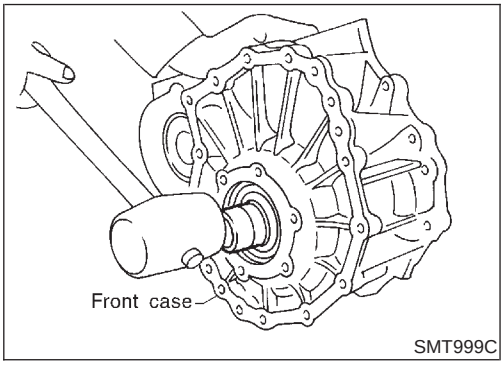

SMT999C

5. Remove sun gear by tapping it lightly.

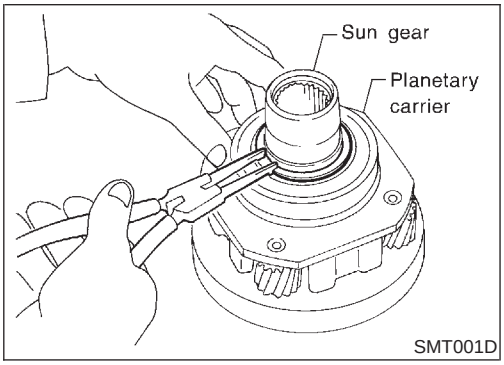

SMT001D

6. Remove snap ring from sun gear.
- **Do not reuse snap ring as it is a selective part.**

7. Remove washer from sun gear.

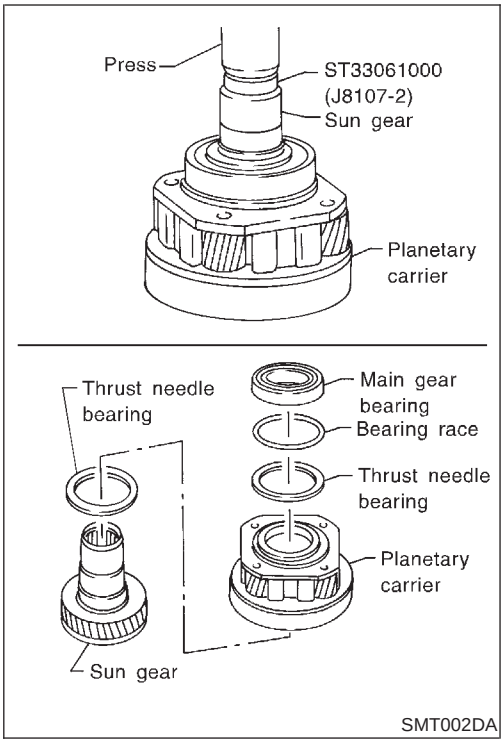

8. Set an adapter to sun gear as shown in the figure. Remove sun gear from planetary carrier. Remove main gear bearing, bearing race and thrust needle bearing (front and rear of planetary carrier) from sun gear.

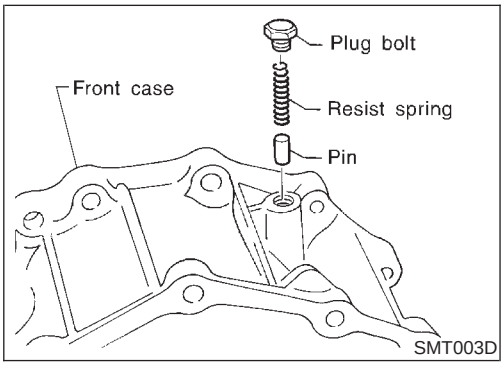

9. Remove plug bolt, then remove resist spring and pin.

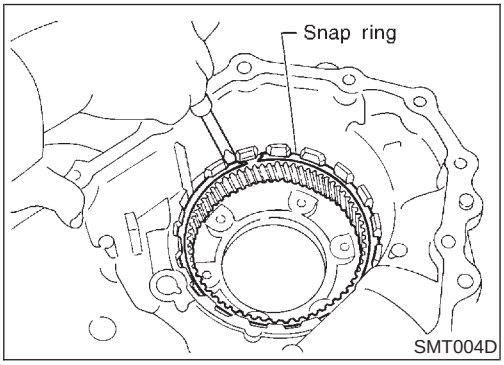

10. Remove snap ring, and remove internal gear.
- **Do not reuse snap ring.**

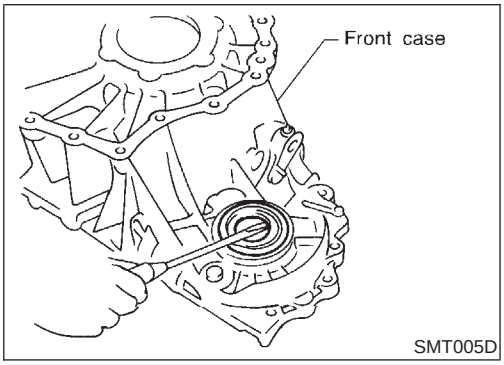

11. Remove front oil seal.
- **Do not reuse oil seal.**
12. Loosen nut of outer lever assembly to pull out cotter pin, and remove outer lever.
13. Remove inner lever assembly.

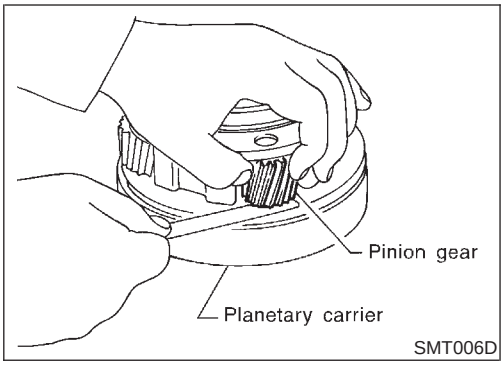

Front Case

INSPECTION

NBTF0080

Planetary Carrier

NBTF0080S01

- Measure end play of each pinion gear, and make sure the measurement is within specification shown below. If out of specification, replace planetary carrier with new one.

  Pinion gear end play:

  0.1 - 0.7 mm (0.004 - 0.028 in)

- Check working face of each gear, bearing and others for damage, burrs, partial wear, dents and other abnormality. If any is found, replace planetary carrier with new one.

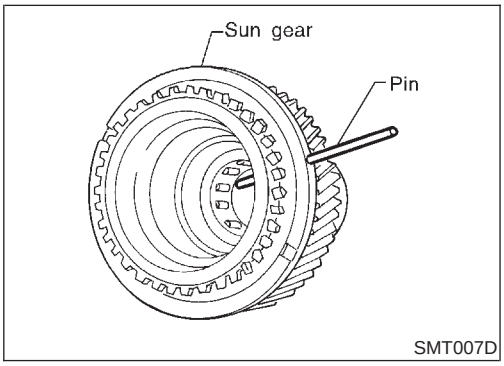

Sun Gear

NBTF0080S02

- Check if oil passage of sun gear is clogged. For this, try to pass a 3.6 mm (0.142 in) dia. wire through oil passage as shown in the figure.
- Check sliding/contact surface of each gear, bearing and others for damage, burrs, partial wear, dents, and other abnormality. If any is found, replace sun gear with new one.

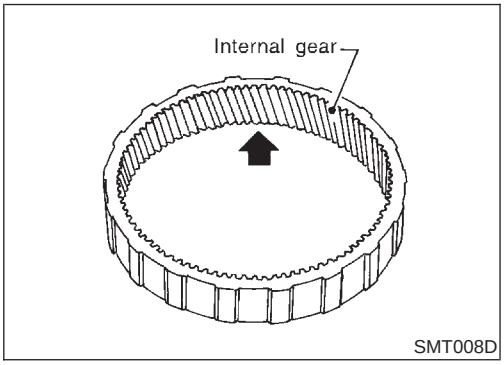

Internal Gear

NBTF0080S03

- Check internal gear teeth for damage, partial wear, dents and other abnormality. If any is found, replace internal gear with new one.

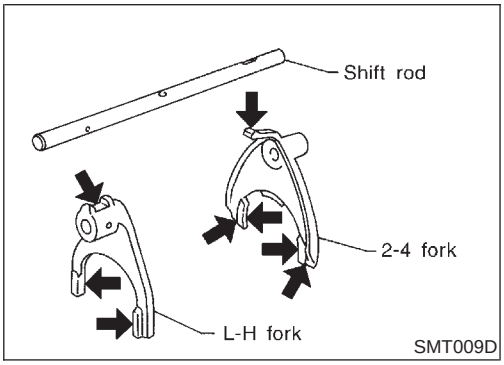

Shift Rod Components

NBTF0080S04

- Check working face of shift rod and fork for wear, partial wear, bending and other abnormality. If any is found, replace with new one.

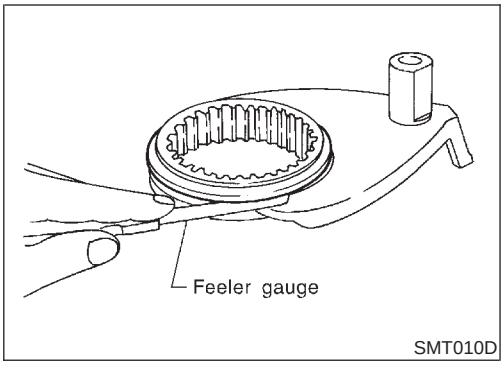

- Measure clearance between shift fork and sleeve. If it is out of specification, replace it with new one.

  Standard value:

  Less than 0.36 mm (0.0142 in)

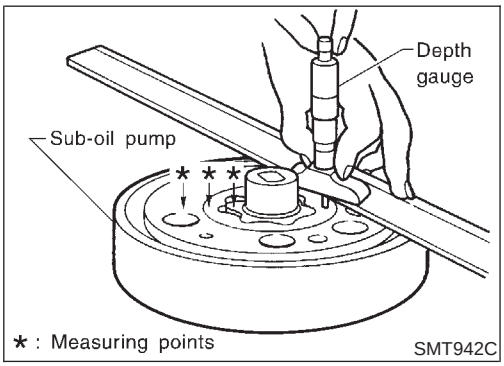

Center Case

INSPECTION

NBTF0081

Sub-oil Pump

NBTF0081S01

1. Check inner and outer circumference, tooth face, and side-face of inner and outer gears for damage or abnormal wear.
2. Measure side clearance between oil pump housing edge and inner gear/outer gear.
3. Make sure side clearance is within specification. If the measurement is out of specification, replace inner and outer gears together with new ones as a set.

   Specification:

   0.015 - 0.035 mm (0.0006 - 0.0014 in)

   For inner gear and outer gear, refer to SDS, TF-157.

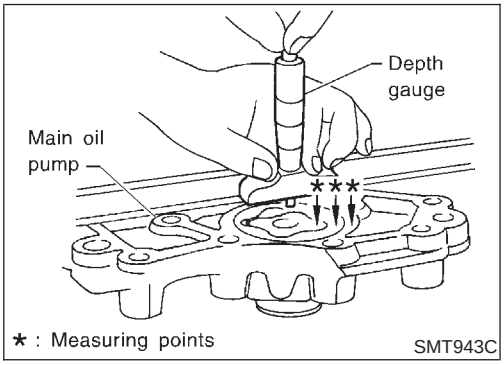

Main Oil Pump

NBTF0081S02

1. Check inner and outer circumference, tooth face, and side-face of inner and outer gears for damage or abnormal wear.
2. Measure side clearance between oil pump housing edge and inner gear/outer gear.
3. Make sure side clearance is within specification. If the measurement is out of specification, replace inner and outer gears with new ones as a set.

   Specification:

   0.015 - 0.035 mm (0.0006 - 0.0014 in)

   For inner gear and outer gear, refer to SDS, TF-157.

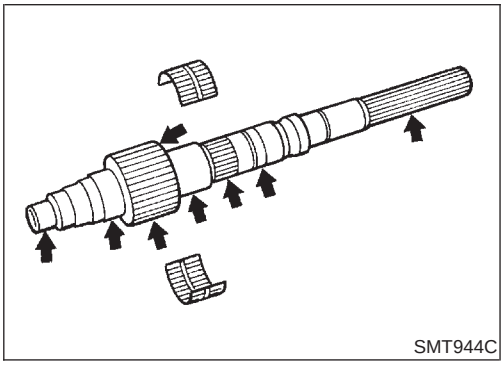

Mainshaft

NBTF0081S03

- Check surfaces which contact sun gear, clutch drum, clutch hub, press flange, clutch piston, each bearing, etc. for damage, peel, partial wear, dents, bending, or other abnormal damage. If any is found, replace with new one.

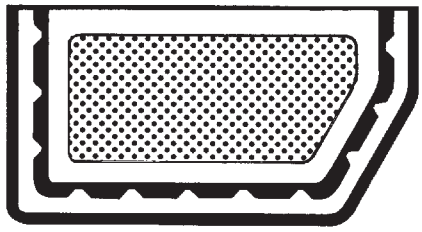

SMT945C

Control Valve

NBTF0081S04

- Check oil filter screen for damage. If any is found, replace with new one.

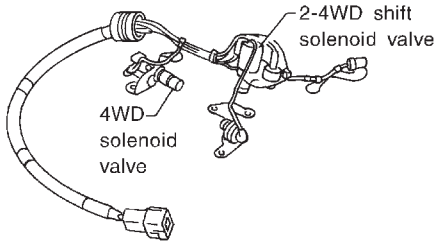

SMT946CA

- Check resistance between terminals of 4WD solenoid valve, 2-4WD shift solenoid valve and transfer fluid temperature sensor.

  Resistance:

  Refer to "COMPONENT INSPECTION", TF-111.

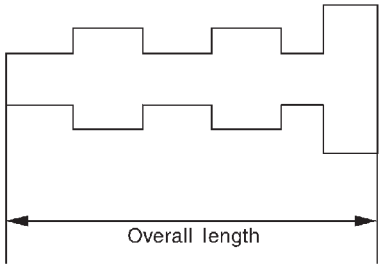

SMT947C

- Check sliding faces of control valves and plugs for abnormality. If any is found, replace the control valve assembly with new one.

CAUTION:

Replace control valve body together with clutch return spring as a set.

Control valve:

Refer to SDS, TF-157.

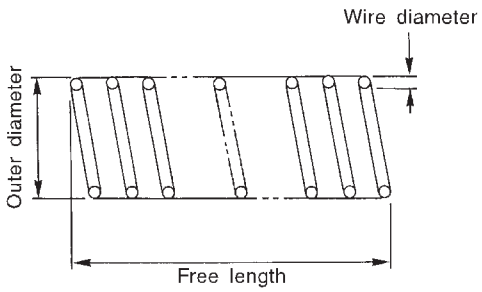

SMT948C

- Check each control valve spring for damage or distortion, and also check its free length, outer diameter and wire diameter. If any damage or fatigue is found, replace control valve body with new one.
- **Replace control valve body together with clutch return spring as a set.**

  Inspection standard:

  Refer to SDS, TF-157.

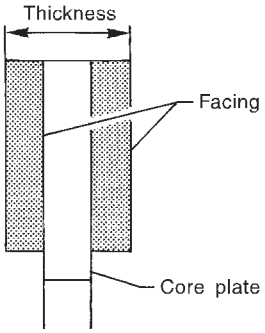

SMT949C

Clutch

NBTF0081S05

- Check drive plate and driven plate facings for damage, cracks or other abnormality. If any, replace with new one.
- Check the thickness of drive plate and driven plate facings.

  Inspection standard:

  Refer to SDS, TF-158.

CAUTION:

- **Measure facing thickness at 3 points to take an average.**
- **Check all the drive and driven plates.**
- **Check return spring for damage or deformation.**

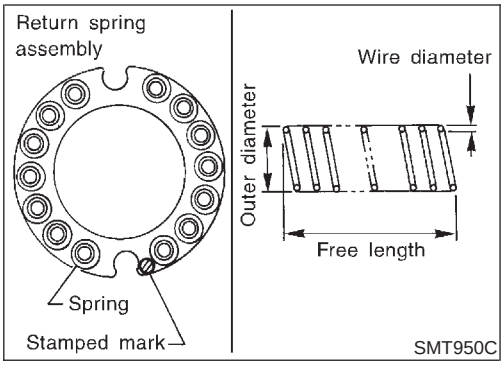

- Check stamped mark shown in the figure. Then, check that free length, outer diameter and wire diameter are within specifications. If any abnormality is found, replace with new return spring assembly of the same stamped number.

  Inspection standard:

  Refer to SDS, TF-158.

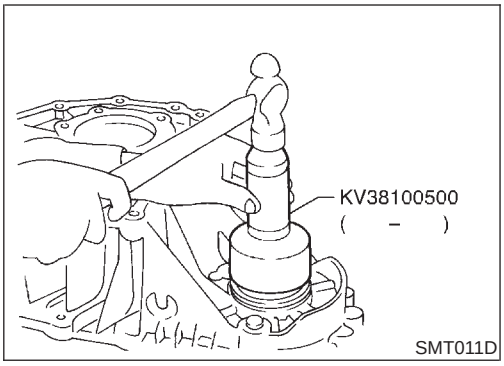

Front Case

ASSEMBLY

NBTF0082

Planetary Carrier, Sun Gear and Internal Gear

NBTF0082S01

1. Apply ATF to oil seal periphery, and install oil seal so that it is flush with the end face of front case.

- **Do not reuse oil seal.**

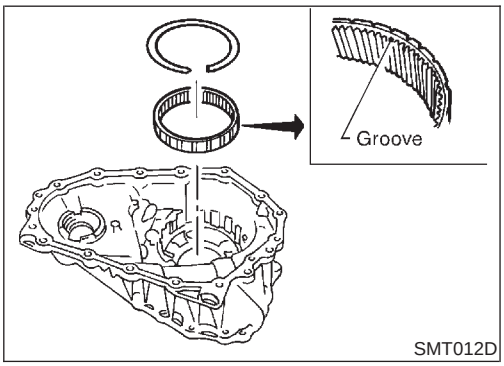

2. Install internal gear with its groove facing snap ring into front case. Then secure it with snap ring.

- **Do not reuse snap ring.**

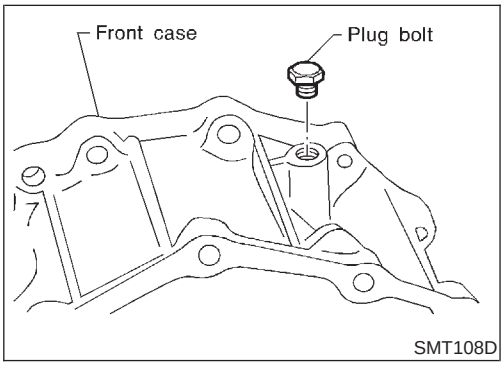

3. Remove all the liquid gasket on plug bolt and front case. Apply locking sealant to plug bolt, install it to front case and tighten it to specified torque.

- With one crest of plug bolt inserted in the hole, apply liquid gasket 1215 to the thread.

  : 19 - 25 N·m (1.9 - 2.5 kg-m, 14 - 18 ft-lb)

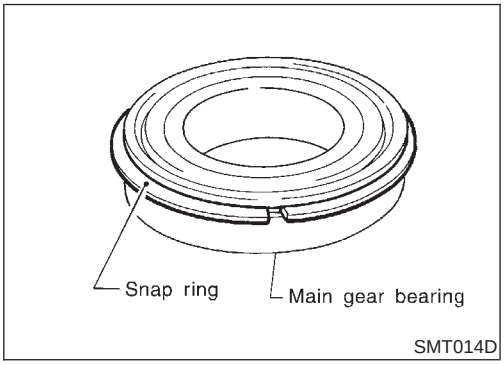

4. Install snap ring to main gear bearing.

- **Do not reuse snap rings.**

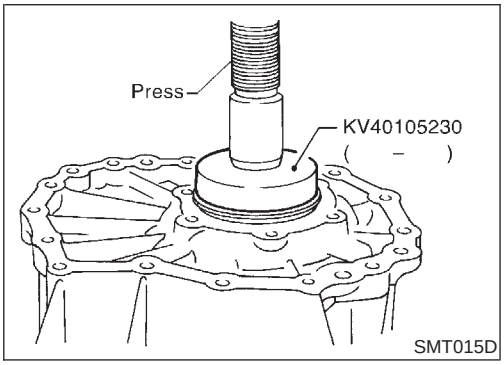

5. Set main gear bearing to front case, then press it.

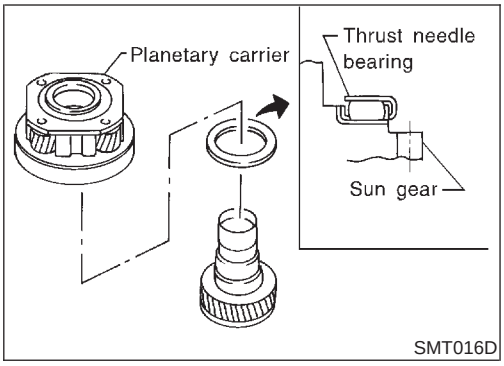

6. Install thrust needle bearing to sun gear.
7. Install sun gear to planetary carrier.

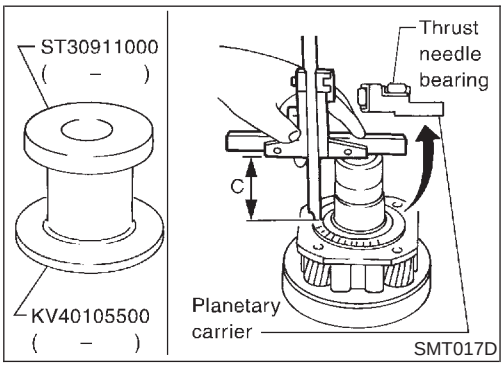

8. Set a support (KV40105500) to bushing replacer puller (ST30911000) as shown in the figure, and place planetary carrier on it.
9. Install thrust needle bearing to planetary carrier with its roller facing front case.
10. Measure "C" from the end of sun gear to the roller surface of thrust needle bearing.

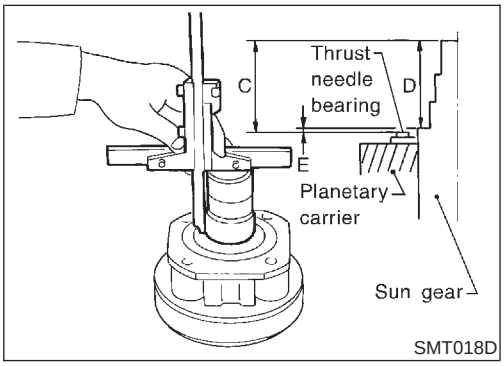

11. Measure "D" from the end of sun gear to the main gear bearing contact surface.
12. Calculate end play "E" using "C" and "D" obtained in steps 10 and 11. Select bearing race so that the end play becomes the standard value.

    Calculation formula:

    End play "E" = "C" – "D"

    Standard end play:

    0.1 - 0.25 mm (0.0039 - 0.0098 in)

    Bearing race:

    Refer to SDS, TF-159.

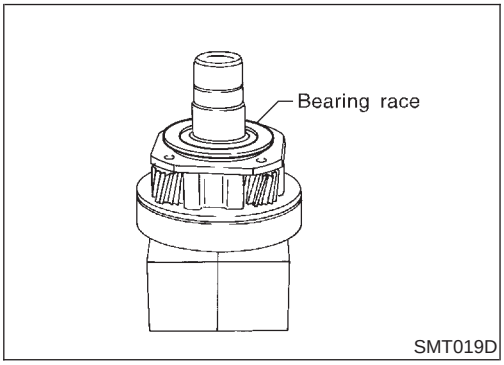

13. Set planetary carrier to press in the status described in step 8. Then install the selected bearing race to planetary carrier.

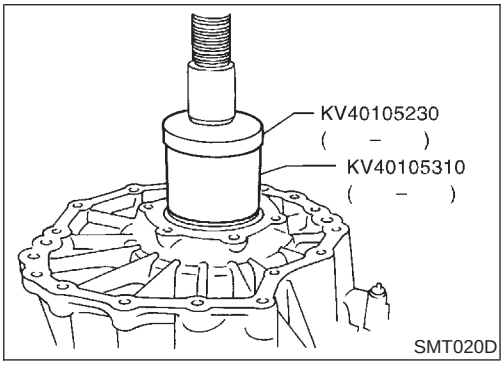

14. Install front case to planetary carrier. Set a support ring (KV40105310) and an adapter B (KV40105230) to main gear bearing inner race, then press it.

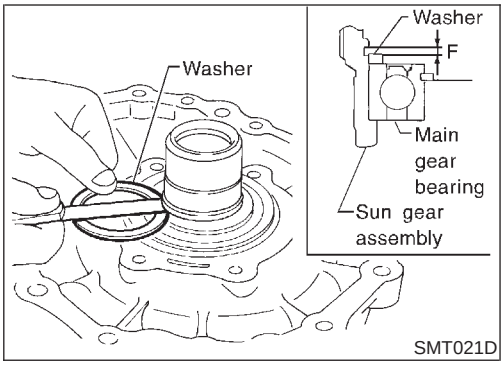

15. Install washer to sun gear assembly, and select proper snap ring so that end play "F" of sun gear is within specifications.

    Standard end play "F":

    0 - 0.15 mm (0 - 0.0059 in)

    Snap ring: Refer to SDS, TF-159.

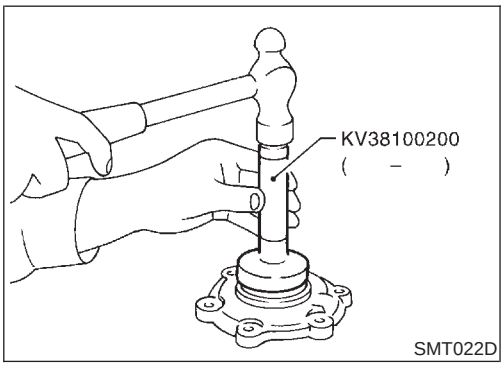

16. Install the selected snap ring.

- **Do not reuse snap rings.**

17. Apply ATF to the periphery of new transfer cover oil seal, and attach it at 1.5 mm (0.059 in) from the transfer cover and face.

- **Do not reuse oil seal.**

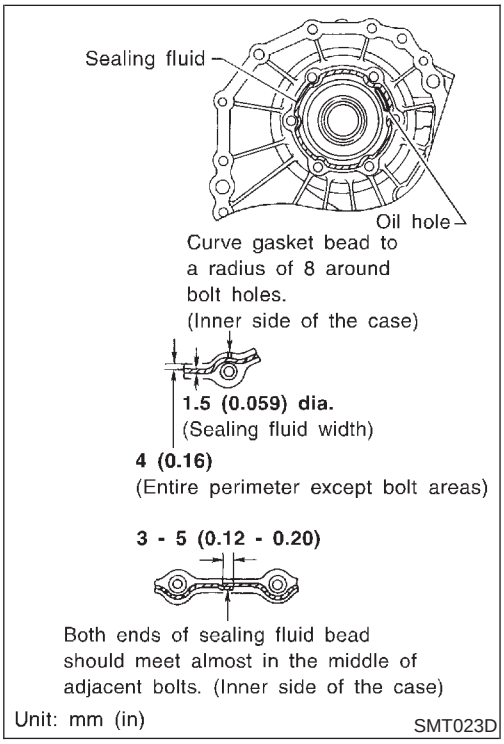

18. Apply sealing fluid (Locktite 518·C1335 x 25) to transfer cover mounting surface of front case as shown in the figure.

CAUTION:

- **Remove all foreign materials such as water, oil, and grease from mating surfaces of front case and transfer cover.**
- **Prevent sealing fluid from entering into oil holes of front case.**

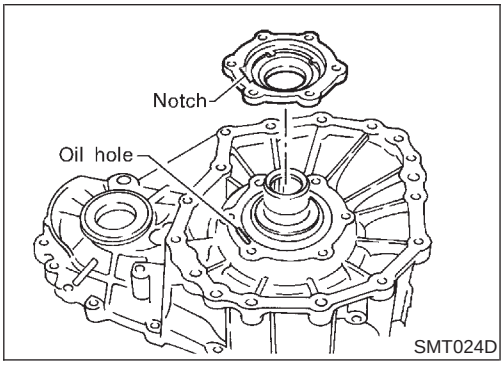

19. Align oil hole of front case with notch of transfer cover, and tighten bolts.

    : 49 - 58 N·m (5.0 - 5.9 kg-m, 36 - 43 ft-lb)

- **Do not reuse bolts.**

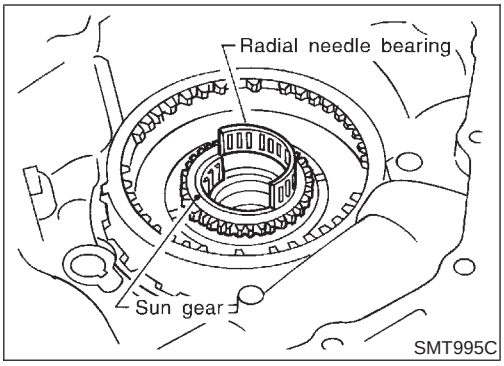

20. Apply petroleum jelly to radial needle bearing, and install it inside sun gear.
21. Install shift rod assembly to front case assembly. Refer to "Shift Rod Assembly", TF-144.
22. Install center case assembly to front case assembly. Refer to "Final Assembly", TF-153.
23. Install rear case assembly to center case. Refer to "Final Assembly", TF-153.

Shift Rod Assembly

NBTF0082S02

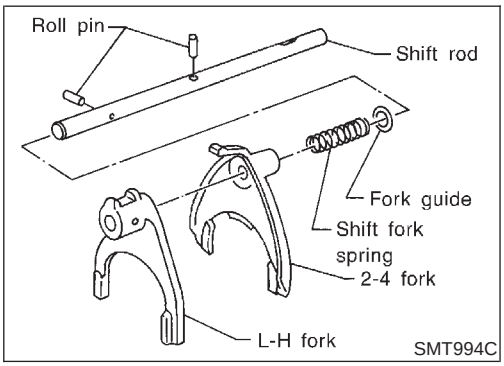

1. Install fork guide, shift fork spring, 2-4 fork, and L-H fork to shift rod, and secure them with roll pins.

- **Do not reuse roll pins.**

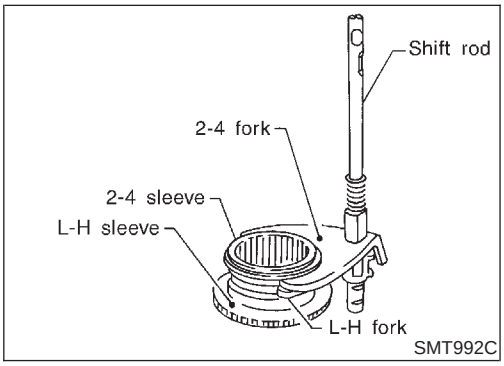

2. Install 2-4 sleeve and L-H sleeve to each fork.

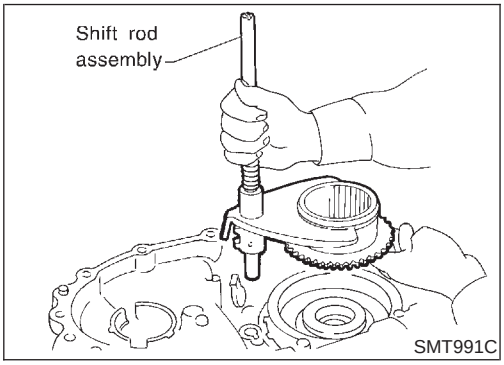

3. While aligning L-H sleeve with planetary carrier, install shift rod assembly to front case.

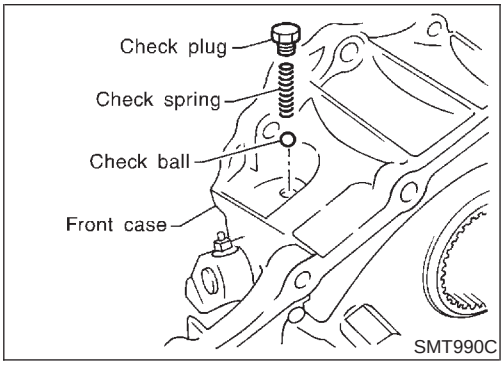

4. Remove all the liquid gasket on check plug and front case, and install check ball and check spring to front case. Apply gasket fluid 1215 (Three Bond) to check plug, install it to front case, and tighten it to specified torque.

- With plug bolt threaded one pitch into the hole, apply gasket fluid 1215 (Three Bond) to the thread.

: 19 - 25 N·m (1.9 - 2.5 kg-m, 14 - 18 ft-lb)

5. Remove all the liquid gasket on the switch fitting and inner side of front case, and with wait detection switch threaded one pitch into the hole, apply gasket fluid 1215 (Three Bond) to the thread, install it, and tighten it to specified torque.

: 15 - 20 N·m (1.5 - 2.0 kg-m, 11 - 14 ft-lb)

- **Wait detection switch harness connector is black.**

6. Install center case assembly to front case assembly. Refer to "Final Assembly", TF-153.
7. Install rear case assembly to center case. Refer to "Final Assembly", TF-153.

Center Case

ASSEMBLY

NBTF0083

Oil Filter

NBTF0083S01

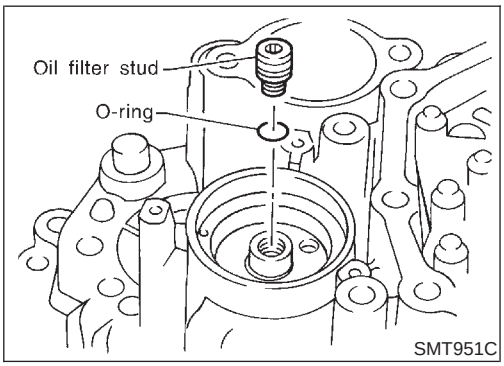

1. Apply ATF or petroleum jelly to new O-ring, and install it to oil filter stud.

- **Do not reuse O-rings.**

2. Install oil filter stud to center case, and tighten it.

: 25 - 35 N·m (2.6 - 3.6 kg-m, 19 - 26 ft-lb)

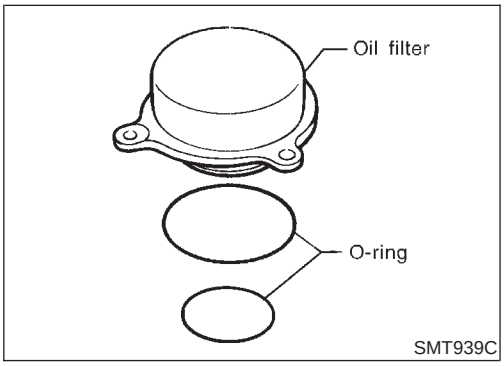

3. Apply ATF or petroleum jelly to two new O-rings, and install them to oil filter.

- **Do not reuse O-rings.**

4. Install oil filter to center case and tighten bolts.

: 7 - 9 N·m (0.7 - 0.9 kg-m, 61 - 78 in-lb)

- **Do not knock oil filter with a tool such as a hammer.**

Sub-oil Pump

NBTF0083S02

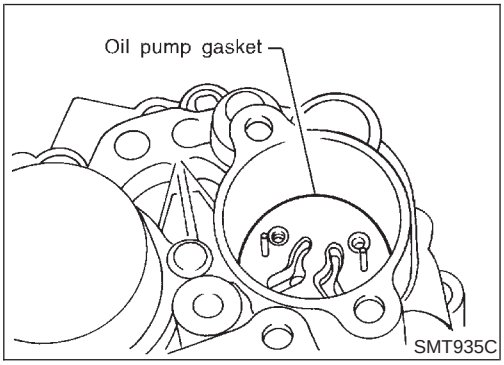

1. Install new oil pump gasket to center case by aligning it with dowel pin inside the center case.

- **Do not reuse gaskets.**

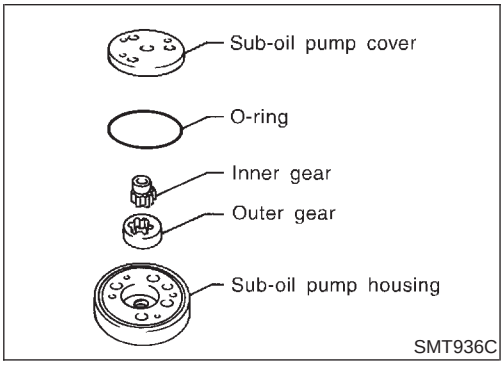

2. Install outer gear* and inner gear to sub-oil pump housing, and measure side clearance. Refer to "Sub-oil Pump", "INSPECTION", TF-138.
3. Set new O-ring to sub-oil pump housing, and install sub-oil pump cover.

- **Do not reuse O-rings.**

* Identification mark "▼" is placed on the side of sub-oil pump cover.

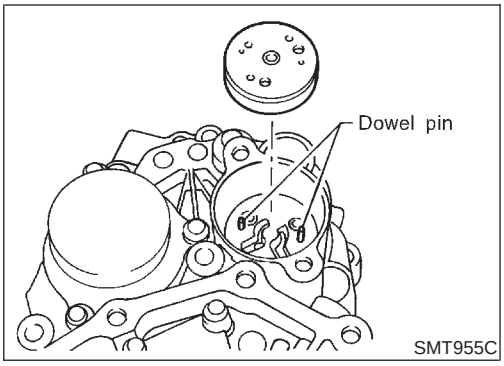

4. Align dowel pin hole and mounting bolt hole of sub-oil pump assembly with center case. Then tighten bolts.
   : 7 - 9 N·m (0.7 - 0.9 kg-m, 61 - 78 in-lb)

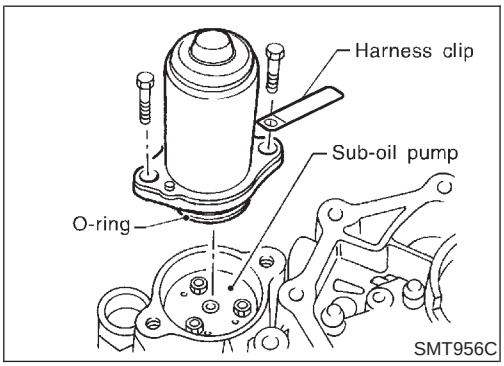

5. Apply ATF or petroleum jelly to new O-ring and install it to transfer motor.
6. Fit double-flat end of transfer motor shaft into slot of sub-oil pump assembly. Then tighten bolts.
   : 41 - 48 N·m (4.2 - 4.9 kg-m, 30 - 35 ft-lb)

Main Oil Pump

NBTF0083S03

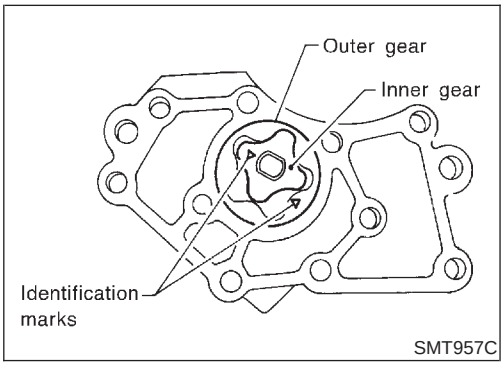

1. Install inner gear and outer gear in the main oil pump housing with their identification marks facing toward center case mounting surface side. Then, measure the side clearance. Refer to "Main Oil Pump", "Center Case", TF-138.

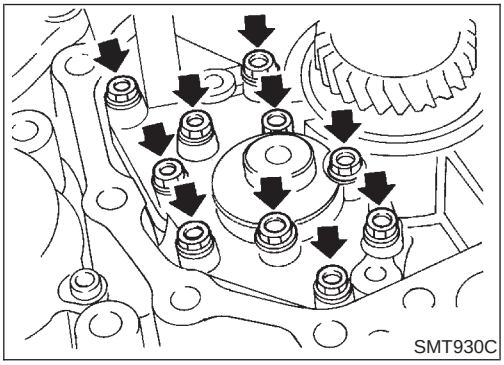

2. Install main oil pump assembly to center case assembly, and tighten bolts.
   : 7 - 9 N·m (0.7 - 0.9 kg-m, 61 - 78 in-lb)
3. Install oil pump shaft to main oil pump, then install rear case assembly to center case.
   Refer to "Final Assembly", TF-153.

Control Valve

NBTF0083S04

1. Clean upper body, control valves and springs with cleaning agent, and apply air blow.
2. Dip control valves in ATF, and apply ATF to the valve-mounting area of upper body.
3. Install each control valve, spring, and plug to upper body, and fix it with retainer plates.

CAUTION:

- **To insert control valves into upper body, place upper body on a level surface in order to prevent flaw or damage.**
- **Make sure each control valve is smoothly inserted.**

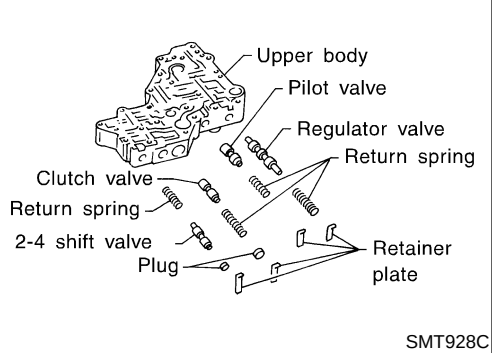

4. Install reverse balls, relief balls and relief springs, accumulator pistons, valve springs and two filters to upper body.

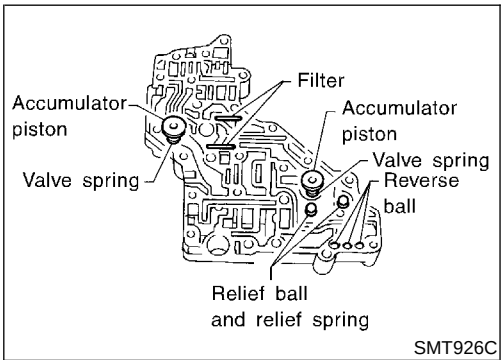

5. Install lower body and separator plate to upper body.

- **Do not reuse separator plates.**

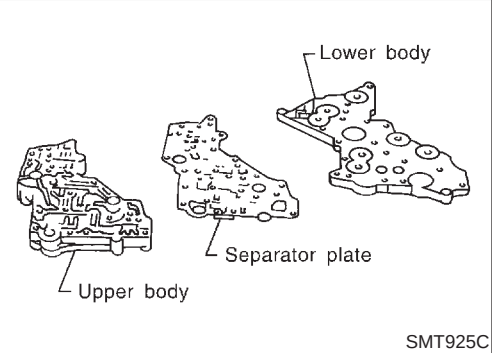

6. With lower body down, tighten two bolts in the position shown in the figure.
7. Apply ATF or petroleum jelly to new O-ring, and install it to 2-4WD shift solenoid valve, terminal body, line pressure switch and 4WD solenoid valve. Install them to control valve assembly.

- **Do not reuse O-rings.**

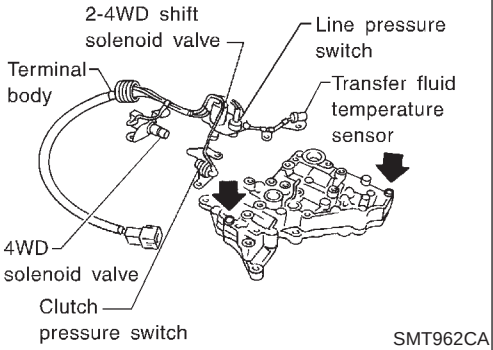

8. Apply ATF or petroleum jelly to lip seals, and install them to center case.

- **Do not reuse lip seals.**
- **There are 2 kinds of lip seals (lip seal of large inner diameter: 5 pieces, lip seal of small inner diameter: 2 pieces). Confirm the position before installation.**

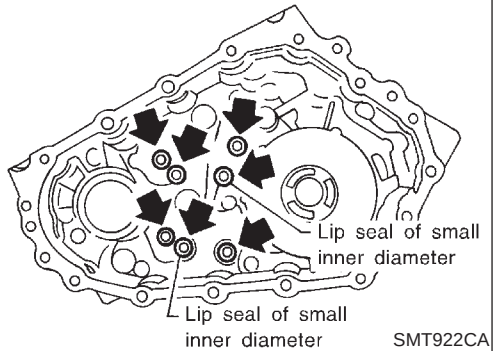

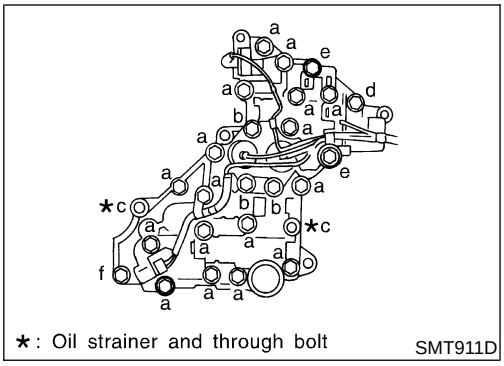

9. Install bolts as shown in the figure, and tighten them to specified torque.

Bolt symbol	a	b	*c	d	e	f
Length under head mm (in)	38 (1.50)	43.5 (1.713)	62 (2.44)	19 (0.75)	52 (2.05)	47 (1.85)
Q'ty	17	3	2	1	1	1
Tightening torque N·m (kg-m, in-lb)	6.9 - 8.8 (0.70 - 0.90, 61.1 - 77.9)					

*: Tighten with oil strainer.

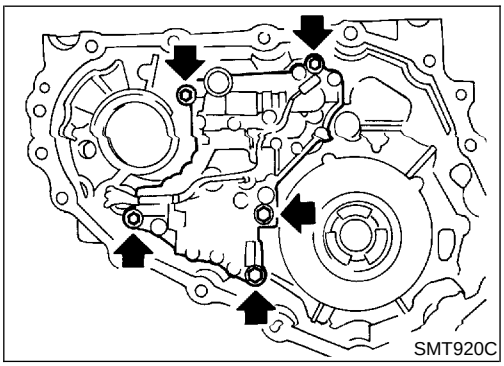

10. Install control valve assembly to center case, and tighten bolts.
: 6.9 - 8.8 N·m (0.70 - 0.90 kg-m, 61.1 - 77.9 in-lb)

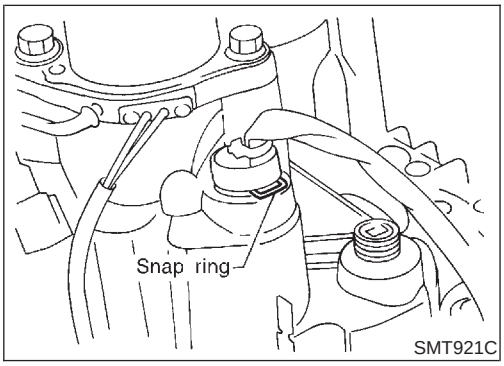

11. Secure terminal body with snap ring.

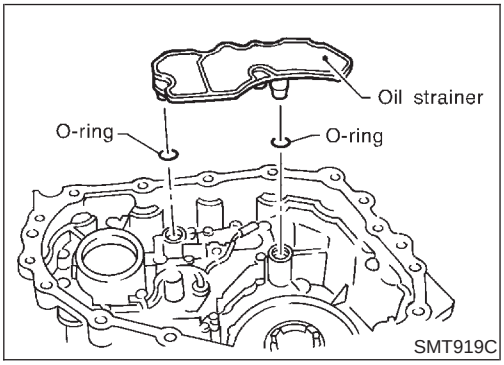

12. Apply ATF or petroleum jelly to O-rings, and install them to oil strainer.

CAUTION:
Do not reuse snap ring.

13. Install oil strainer to control valve assembly.
14. Install mainshaft and clutch drum to center case. Refer to "Mainshaft and Clutch Drum", TF-149.
15. Install front case assembly and rear case assembly. Refer to "Final Assembly", TF-153.

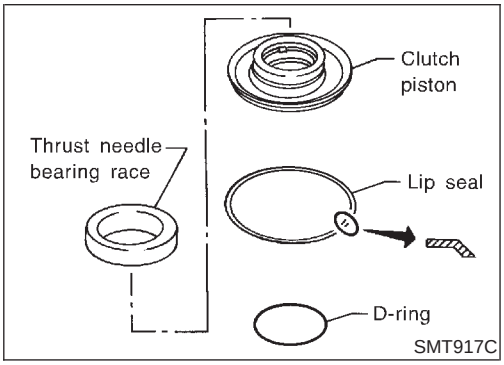

Clutch Piston

NBTF0083S05

1. Apply ATF to D-ring and lip seal, and install them to clutch piston.

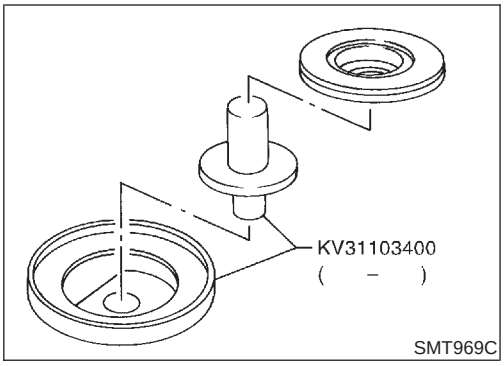

2. Set clutch piston to a clutch piston attachment (KV31103400).

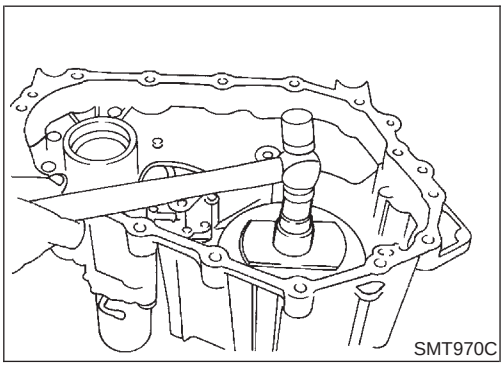

3. Set the clutch piston attachment to center case, and install clutch piston, tap it lightly.
4. Install slide needle bearing race to clutch piston.

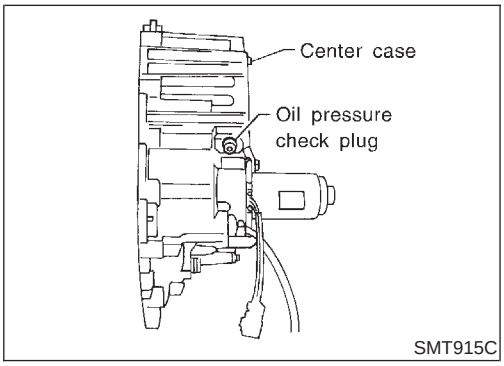

5. Remove all the liquid gasket from oil pressure check port and inside center case. With oil pressure check plug threaded in 1 or 2 pitches, apply gasket fluid 1215 (Three Bond) to the thread of plug, and tighten.
   : 10 - 17 N·m (1.0 - 1.7 kg-m, 87 - 148 in-lb)
6. Install mainshaft and clutch drum. Refer to "Mainshaft and Clutch Drum", TF-149.

Mainshaft and Clutch Drum

NBTF0083S06

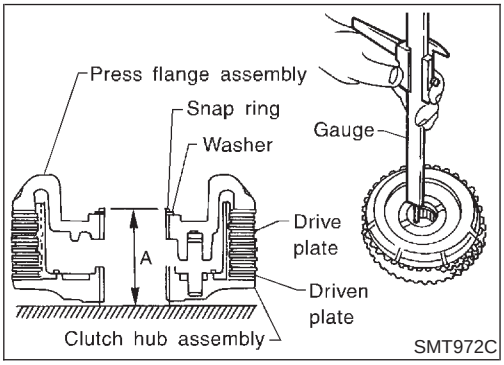

1. Install drive plates, driven plates and press flange to clutch hub.
2. Place clutch hub on a surface plate and measure dimension "A" between snap ring mounting surface of press flange and clutch drum sliding face of clutch hub.

CAUTION:
Measure at least 2 points, and take an average.

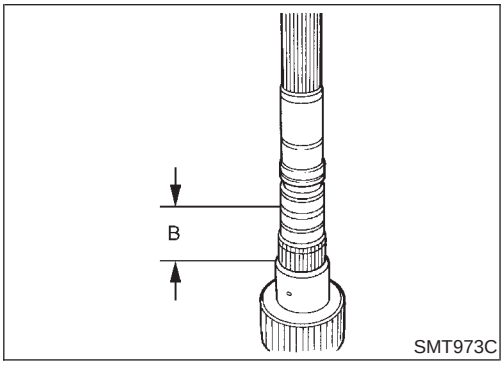

3. Measure dimension "B" between the gear end of mainshaft and the snap ring mounting portion.
4. Calculate end play using dimension "A" and dimension "B" (obtained in steps 2 and 3), and select proper retaining plate so that the end play is within specifications.

   Calculation formula:
   End play = B − A − Retaining plate thickness
   Standard end play:
   0.2 - 0.5 mm (0.008 - 0.020 in)
   Retaining plate:
   Refer to SDS, TF-158.

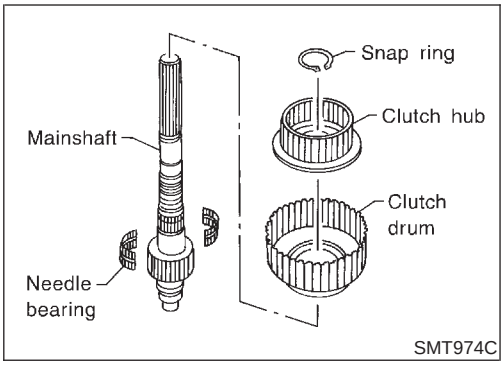

5. Install clutch drum, needle bearing and clutch hub to mainshaft, and secure them with snap ring.
- **Do not reuse snap ring.**

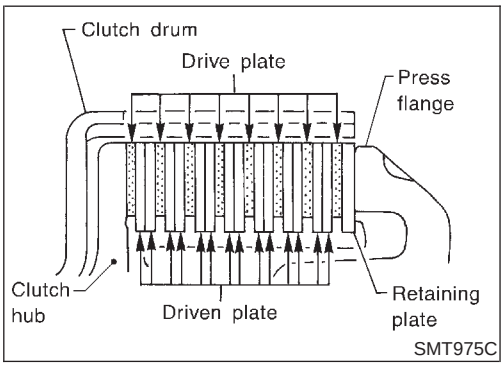

6. Install each clutch to clutch drum.

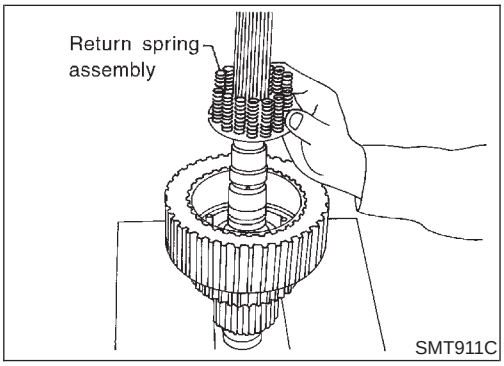

7. Align the notch of return spring assembly with the pin of clutch hub, and install it.

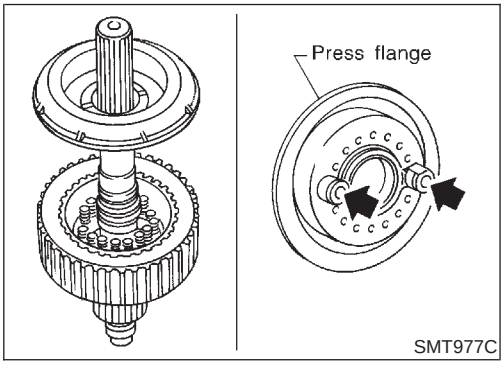

8. Install press flange (with the holes indicated by arrows aligned with pins of clutch hub).

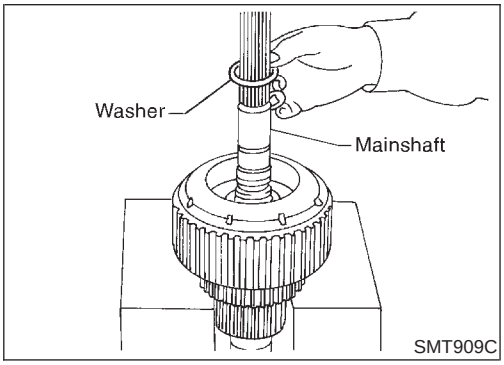

9. Install washer.

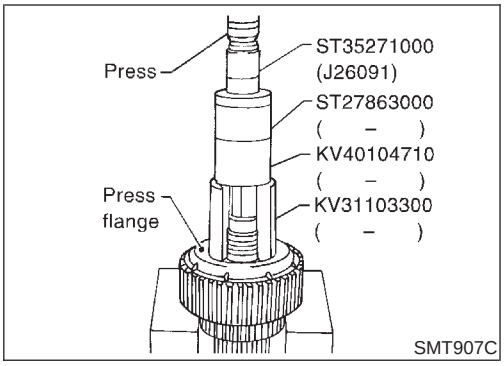

10. Pass mainshaft through snap ring. Set a drift (KV31103300), a support ring (KV40104710), a support ring (ST27863000) and a drift (ST35271000) to press flange at the position shown in the figure, and press snap ring until it fits into snap ring groove on mainshaft.

- **Do not reuse snap ring.**

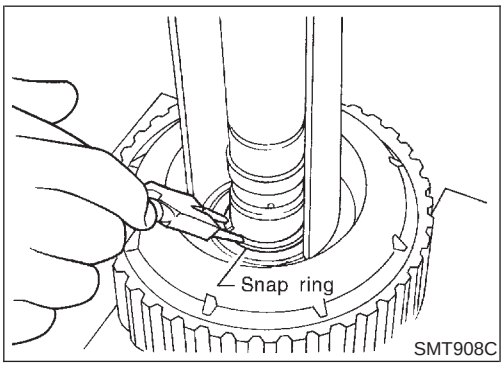

11. Fix snap ring to mainshaft.

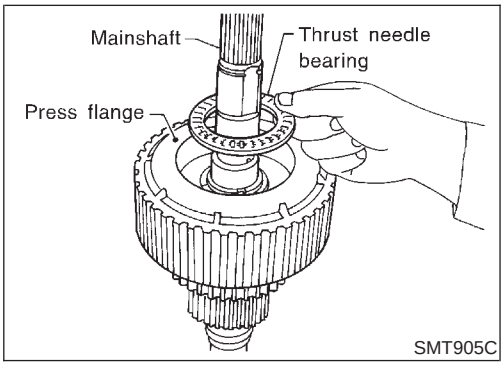

12. Install thrust needle bearing to press flange.

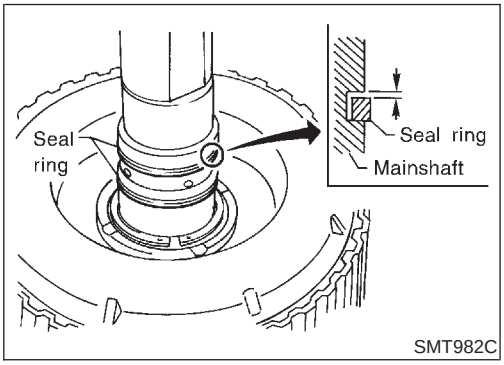

13. Apply petroleum jelly to new seal rings, and install them to mainshaft. Measure clearance between seal ring and groove using feeler gauge.

    Standard clearance:
    0.05 - 0.30 mm (0.0020 - 0.0118 in)
    Limit clearance:
    0.30 mm (0.0118 in)

- Pass seal ring from mainshaft rear end to install it.

    Seal ring dimension:
    Refer to SDS, TF-159.

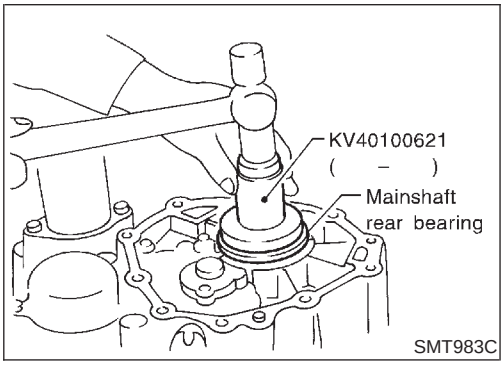

14. Install mainshaft rear bearing to center case.

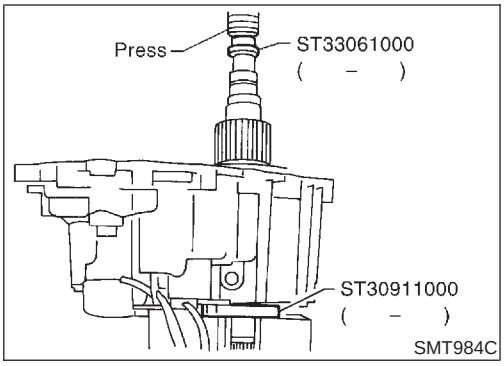

15. Place puller (ST30911000) to mainshaft rear bearing inner race, and set it to press stand.
16. Place adapter (ST33061000) to the tip of mainshaft, and press mainshaft into center case.

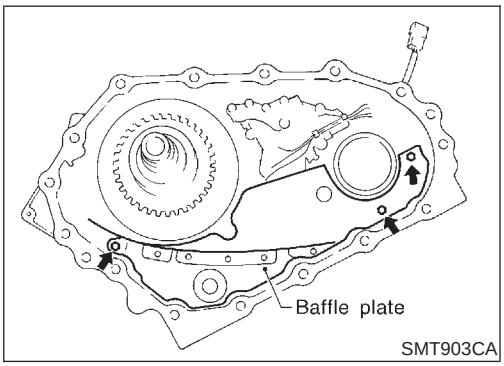

17. Install baffle plate to center case, and tighten bolts.
    : 3.7 - 5.0 N·m (0.38 - 0.51 kg-m, 33.0 - 44.3 in-lb)
18. Install front drive shaft and drive chain. Refer to "Front Drive Shaft and Drive Chain" below.
19. Install front case assembly and rear case assembly.
    Refer to "Final Assembly", TF-153.

Front Drive Shaft and Drive Chain

NBTF0083S07

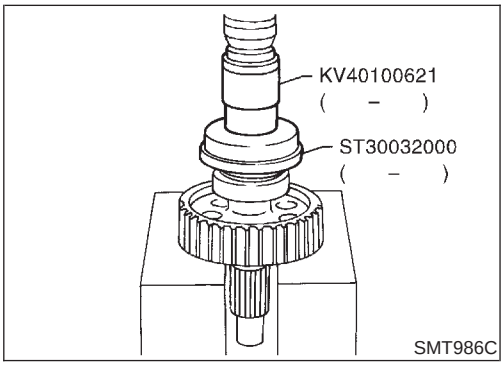

1. Place a base (ST30032000) to front drive shaft rear bearing inner race, and press it using a drift (KV40100621).

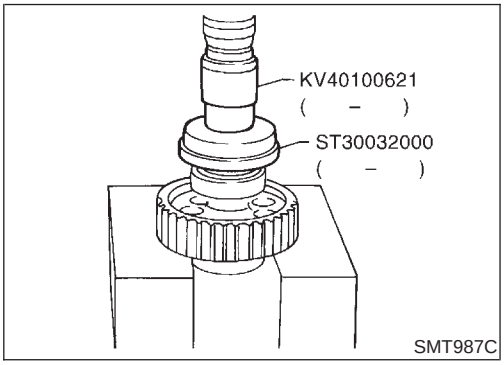

2. Place base (ST30032000) to front drive shaft front bearing inner race, and press it using the drift (KV40100621).

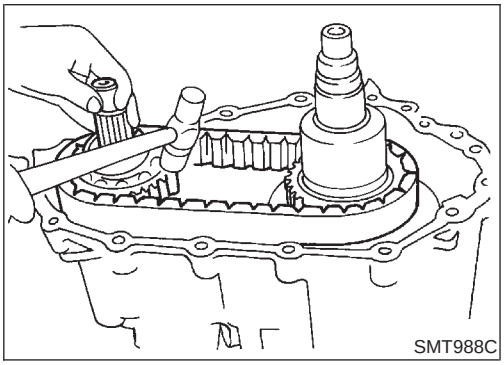

3. Install drive chain temporarily to front drive shaft and drive gear of clutch drum.
4. Tap front drive shaft with a plastic hammer while keeping it upright and press-fit front drive shaft rear bearing.

- **Be careful not to tap drive chain with a hammer.**

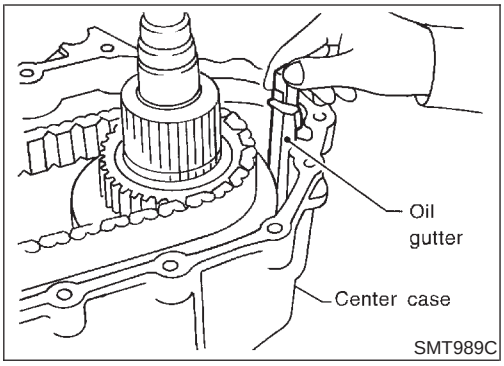

5. Align claw of oil gutter with center case, and install it.
6. Install front case assembly and rear case assembly.
   Refer to "Final Assembly", TF-153.

Final Assembly

NBTF0084

1. Install C-rings to mainshaft rear bearing.

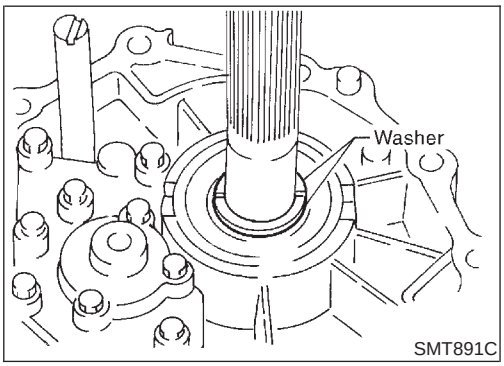

2. Check speedometer drive gear teeth for abnormal wear. Set speedometer drive gear properly on mainshaft, and secure it with snap ring.

- **Do not reuse snap ring.**

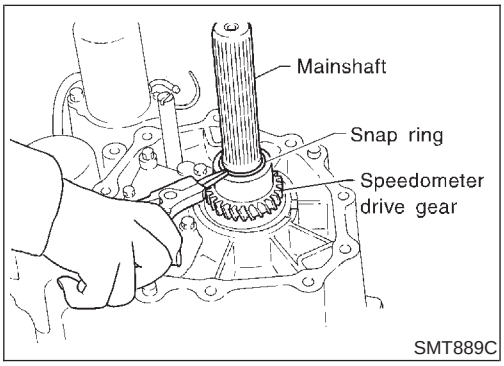

3. Apply sealing fluid 518 (Locktite) to the entire center case mounting surface of front case as shown in the figure.

CAUTION:

Remove all foreign materials such as water, oil and grease from center case and front case mating surfaces.

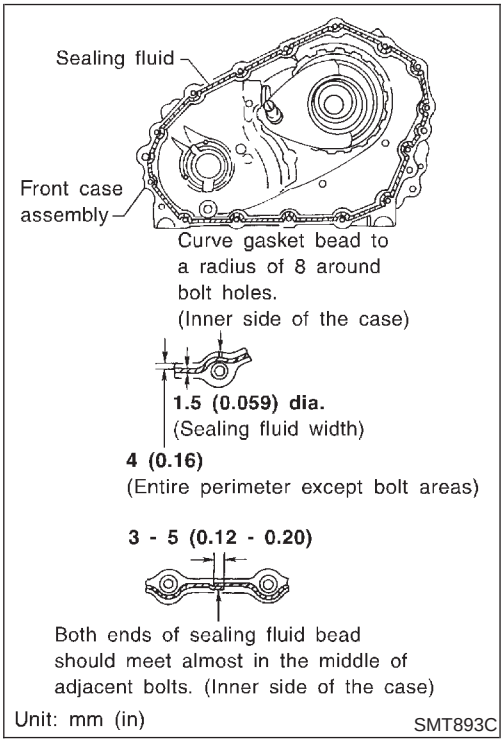

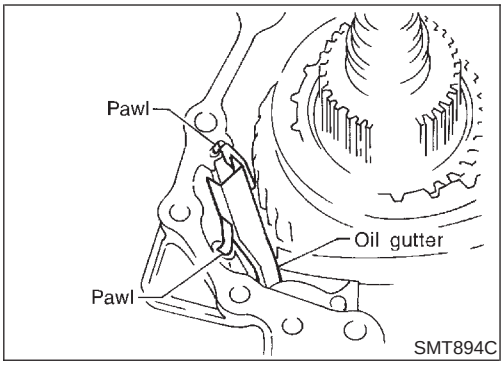

4. Make sure the two claws of oil gutter are securely attached to slots in center case.

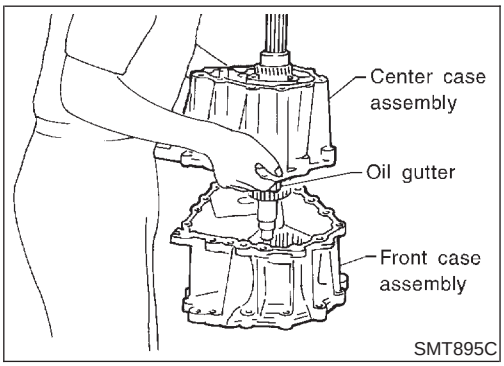

5. With the claws of oil gutter held by a finger, install center case assembly to front case assembly.

CAUTION:

Pay careful attention so that mainshaft end does not damage radial needle bearing in sun gear assembly.

6. Tap center case lightly with a rubber hammer or the like and press-fit front drive shaft bearing into front case.

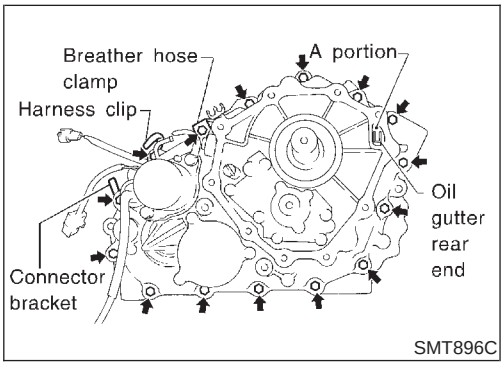

7. Make sure oil gutter rear end protrudes from point "A" in the figure.
8. Tighten bolts to specified torque.

   : 41 - 48 N·m (4.2 - 4.9 kg-m, 30 - 35 ft-lb)

- **Be sure to install air breather hose clamp, connector bracket and harness clip.**

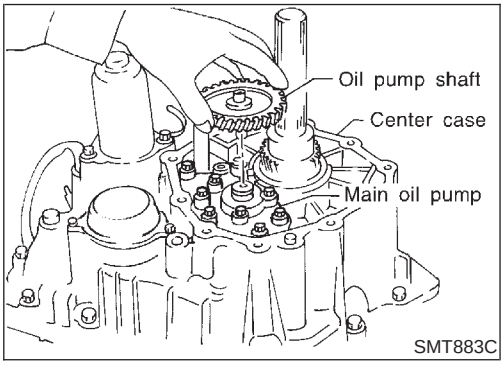

9. Fit double-flat end of oil pump shaft into slot of main oil pump and install it.

NOTE:

When oil pump shaft is rotated slightly, it drops into position where both parts fit.

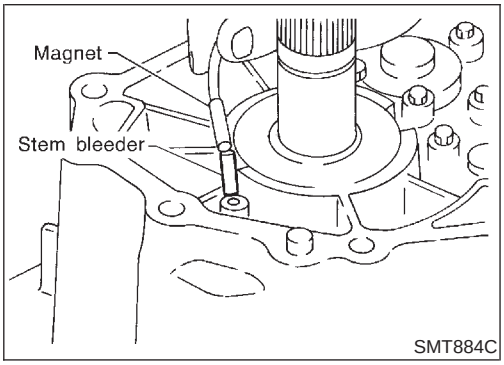

10. Install stem bleeder to center case.

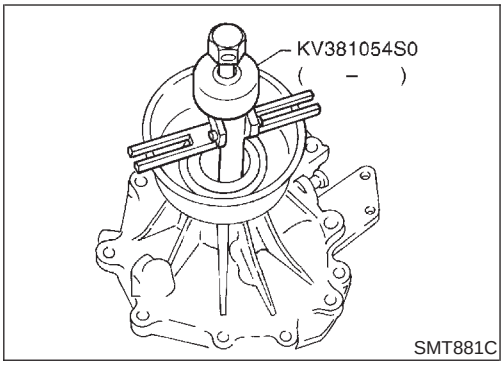

11. Remove rear oil seal.
- **Do not reuse oil seal.**

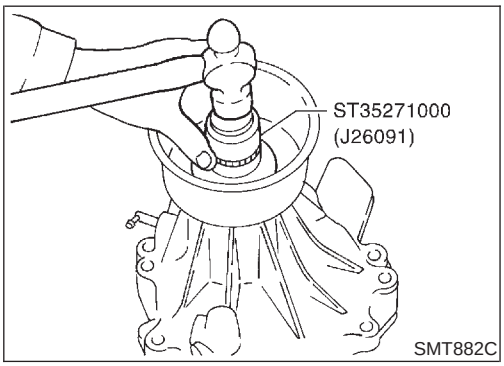

12. Apply ATF to the circumference of new rear oil seal, and tap it using a drift as shown in the figure so that it is aligned with case tip face.
- **Apply multi-purpose grease to oil seal lip.**

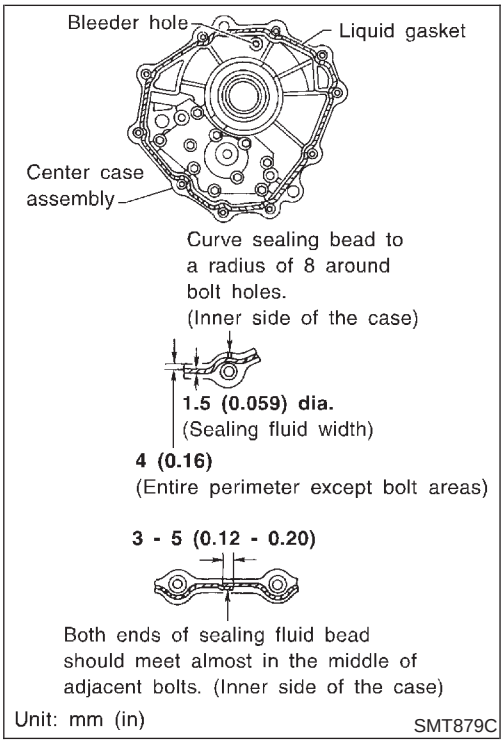

13. Apply sealing fluid 518 (Locktite) to entire rear case mounting surface of center case as shown in the figure.

CAUTION:
- **Remove all foreign materials such as water, oil, and grease from center case and rear case mating surfaces.**
- **Be careful not to allow sealing fluid to clog bleeder hole.**

14. Install rear case to center case, and tighten bolts to specified torque.

    : 41 - 48 N·m (4.2 - 4.9 kg-m, 30 - 35 ft-lb)
- **Be sure to attach harness clips.**

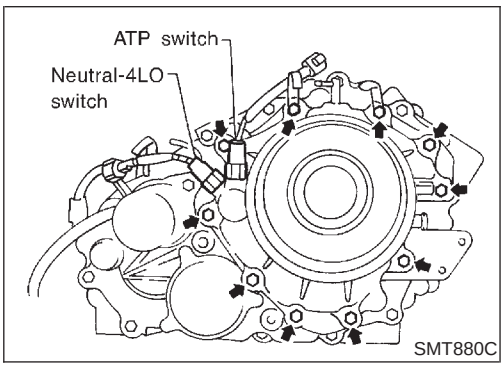

15. Remove all the gasket fluid 1215 (Three Bond) from switch mounting area and inside rear case, with ATP switch and neutral-4LO switch threaded in 1 to 2 pitches, apply gasket fluid 1215 (Three Bond) to the thread of the switches and tighten it to specified torque.

    : 15 - 20 N·m (1.5 - 2.0 kg-m, 11 - 14 ft-lb)
16. Install rear case assembly to center case assembly.

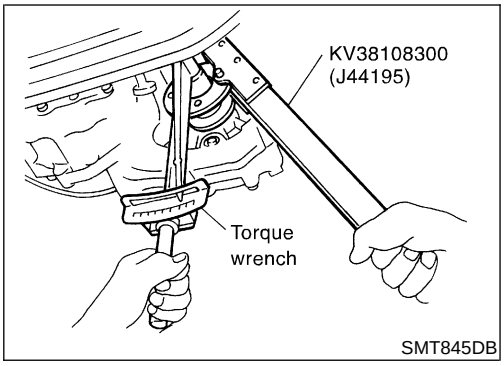

17. Install companion flange to front drive shaft, and tighten mounting nut.

    : 226 - 324 N·m (23.0 - 33.0 kg-m, 166 - 239 ft-lb)

General Specifications

NBTF0085

Transfer model			ATX14A
Gear ratio	High		1.000
	Low		2.596
Number of teeth	Planetary gear	Sun gear	57
		Internal gear	91
	Front drive sprocket		35
	Front drive shaft		35
Fluid capacity ℓ (US qt, Imp qt)*			3.0 (3-1/8, 2-5/8)

*: Refer to MA-11, “Fluids and Lubricants”.

Inner Gear and Outer Gear

NBTF0086

SUB-OIL PUMP

NBTF0086S01

Allowable clearance	0.015 - 0.035 mm (0.0006 - 0.0014 in)	
Gear thickness mm (in)	Part No.*	
	Inner gear	Outer gear
9.27 - 9.28 (0.3650 - 0.3654)	31346 0W462	31347 0W462
9.28 - 9.29 (0.3654 - 0.3657)	31346 0W461	31347 0W461
9.29 - 9.30 (0.3657 - 0.3661)	31346 0W460	31347 0W460

*: Always check with the Parts Department for the latest parts information.

MAIN OIL PUMP

NBTF0086S02

Allowable clearance	0.015 - 0.035 mm (0.0006 - 0.0014 in)	
Gear thickness mm (in)	Part No.*	
	Inner gear	Outer gear
14.67 - 14.68 (0.5776 - 0.5780)	31346 0W412	31347 0W412
14.68 - 14.69 (0.5780 - 0.5783)	31346 0W411	31347 0W411
14.69 - 14.70 (0.5783 - 0.5787)	31346 0W410	31347 0W410

*: Always check with the Parts Department for the latest parts information.

Control Valve

NBTF0087

VALVE

NBTF0087S01

Mounting position	Part name	Part No.*	Outer dia. mm (in)	Overall length mm (in)
L1	2-4 shift valve	31772 21X00	8.0 (0.315)	38.5 (1.516)
L2	Clutch valve	31772 80X11	10.0 (0.394)	40.0 (1.575)
L4	Pilot valve	31772 80X11	10.0 (0.394)	40.0 (1.575)
L5	Regulator valve	31741 0W410	12.0 (0.472)	68.0 (2.677)

*: Always check with the Parts Department for the latest parts information.

SPRING

NBTF0087S02

Mounting position	Part name	Part No.*	Free length mm (in)	Outer dia. mm (in)	Wire dia. mm (in)	Winding direction
L1	2-4 shift valve spring	31742 0W400	31.85 (1.2539)	7.0 (0.276)	0.6 (0.024)	Clockwise

Control Valve (Cont'd)

Mounting position	Part name	Part No.*	Free length mm (in)	Outer dia. mm (in)	Wire dia. mm (in)	Winding direction
L2	Clutch valve spring	31742 0W405	40.6 (1.598)	9.0 (0.354)	0.8 (0.031)	Clockwise
L4	Pilot valve spring	31742 0W410	28.1 (1.106)	9.0 (0.354)	1.2 (0.047)	Clockwise
L5	Regulator valve spring	31742 0W415	39.7 (1.563)	11.0 (0.433)	1.3 (0.051)	Clockwise

*: Always check with the Parts Department for the latest parts information.

Clutch

NBTF0088

DRIVE PLATE

NBTF0088S01

Part No.*	Quantity	Initial thickness mm (in)	Limit value mm (in)
31532 0W410	8	2.0 (0.079)	1.8 (0.071)

*: Always check with the Parts Department for the latest parts information.

DRIVEN PLATE

NBTF0088S04

Part No.*	Quantity	Initial thickness mm (in)	Limit value mm (in)
31536 0W410	14	2.0 (0.079)	0 (0) (steel plate)

*: Always check with the Parts Department for the latest parts information.

RETURN SPRING

NBTF0088S02

Stamped mark	Part No.*	Free length mm (in)	Outer dia. mm (in)	Wire dia. mm (in)	Winding direction
1	31521 0W401	37.3 (1.496)	12.0 (0.472)	1.8 (0.071)	Clockwise
2	31521 0W402	37.8 (1.488)			
3	31521 0W403	38.4 (1.512)			
4	31521 0W404	38.9 (1.531)			
5	31521 0W405	39.4 (1.551)			
6	31521 0W406	40.0 (1.575)			
7	31521 0W407	36.8 (1.449)			
8	31521 0W408	40.5 (1.594)			

*: Always check with the Parts Department for the latest parts information.

RETAINING PLATE

NBTF0088S03

Standard end play	0.2 - 0.5 mm (0.008 - 0.020 in)	
Measured value mm (in)	Part No.*	Thickness mm (in)
2.30 - 2.50 (0.0906 - 0.0984)	31537 0W410	2.1 (0.083)
2.50 - 2.70 (0.0984 - 0.1063)	31537 0W411	2.3 (0.091)
2.70 - 2.90 (0.1063 - 0.1142)	31537 0W412	2.5 (0.098)
2.90 - 3.10 (0.1142 - 0.1220)	31537 0W413	2.7 (0.106)
3.10 - 3.30 (0.1220 - 0.1299)	31537 0W414	2.9 (0.114)
3.30 - 3.50 (0.1299 - 0.1378)	31537 0W415	3.1 (0.122)
3.50 - 3.70 (0.1378 - 0.1457)	31537 0W416	3.3 (0.130)
3.70 - 3.90 (0.1457 - 0.1535)	31537 0W417	3.5 (0.138)
3.90 - 4.10 (0.1535 - 0.1614)	31537 0W418	3.7 (0.146)
4.10 - 4.30 (0.1614 - 0.1693)	31537 0W419	3.9 (0.154)

Standard end play	0.2 - 0.5 mm (0.008 - 0.020 in)	
Measured value mm (in)	Part No.*	Thickness mm (in)
4.30 - 4.50 (0.1693 - 0.1772)	31537 0W420	4.1 (0.161)
4.50 - 4.70 (0.1772 - 0.1850)	31537 0W421	4.3 (0.169)
4.70 - 4.90 (0.1850 - 0.1929)	31537 0W422	4.5 (0.177)
4.90 - 5.10 (0.1929 - 0.2008)	31537 0W423	4.7 (0.185)

*: Always check with the Parts Department for the latest parts information.

Seal Ring (Mainshaft side)

NBTF0089

Standard clearance Limit clearance	0.05 - 0.30 mm (0.0020 - 0.0118 in) 0.30 mm (0.0118 in)		
Part No.*	Outer dia. mm (in)	Inner dia. mm (in)	Thickness mm (in)
31525 0W410	40.8 (1.606)	36.9 (1.453)	1.97 (0.471)

*: Always check with the Parts Department for the latest parts information.

Bearing Race (Thrust needle bearing side)

NBTF0090

Standard end play	0.1 - 0.25 mm (0.0039 - 0.0098 in)	
End play (Dimension "E") mm (in)	Part No.*	Thickness mm (in)
1.785 - 1.800 (0.0703 - 0.0709)	31439 0W410	1.6 (0.063)
1.800 - 1.900 (0.0709 - 0.0748)	31439 0W411	1.7 (0.067)
1.900 - 2.000 (0.0748 - 0.0787)	31439 0W412	1.8 (0.071)
2.000 - 2.100 (0.0787 - 0.0827)	31439 0W413	1.9 (0.075)
2.100 - 2.200 (0.0827 - 0.0866)	31439 0W414	2.0 (0.079)
2.200 - 2.270 (0.0866 - 0.0894)	31439 0W415	2.1 (0.083)

*: Always check with the Parts Department for the latest parts information.

Snap Ring (Sun gear side)

NBTF0091

Standard end play	0 - 0.15 mm (0 - 0.0059 in)	
End play (Dimension "F") mm (in)	Part No.*	Thickness mm (in)
2.40 - 2.50 (0.0945 - 0.0984)	33112 0W411	2.4 (0.094)
2.50 - 2.60 (0.0984 - 0.1024)	33112 0W412	2.5 (0.098)
2.60 - 2.70 (0.1024 - 0.1063)	33112 0W413	2.6 (0.102)

*: Always check with the Parts Department for the latest parts information.

NOTES