CLUTCH

SECTION CL

CONTENTS

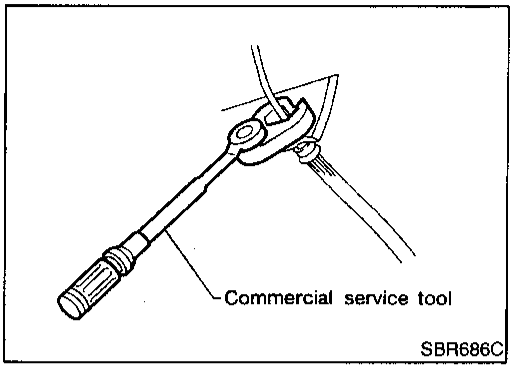

Precautions

NACL0001

- **Recommended fluid is brake fluid "DOT 3".**
- **Never reuse drained brake fluid.**
- **Be careful not to splash brake fluid on painted areas.**
- **When removing and installing clutch piping, use Tool.**
- **Use new brake fluid to clean or wash all parts of master cylinder, operating cylinder and clutch damper.**
- **Never use mineral oils such as gasoline or kerosene. It will ruin the rubber parts of the hydraulic system.**

WARNING:
After cleaning the clutch disc, wipe it with a dust collector. Do not use compressed air.

Special Service Tools

NACL0002

The actual shapes of Kent-Moore tools may differ from those of special service tools illustrated here.

Tool number (Kent-Moore No.) Tool name	Description
ST20630000 (J26366) Clutch aligning bar	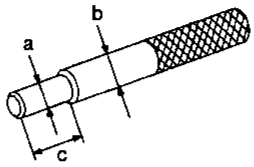 NT405 Installing clutch cover and clutch disc **a: 15.9 mm (0.626 in) dia.** **b: 22.8 mm (0.898 in) dia.** **c: 55 mm (2.17 in)**
ST20050240 (—) Diaphragm spring adjusting wrench	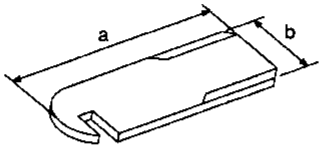 NT404 Adjusting unevenness of diaphragm spring of clutch cover **a: 150 mm (5.91 in)** **b: 25 mm (0.98 in)**

Commercial Service Tools

NACL0003

Tool name	Description
1 Flare nut crowfoot 2 Torque wrench	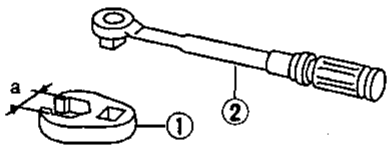 NT360 Removing and installing clutch piping **a: 10 mm (0.39 in)**
Bearing puller	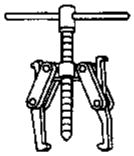 NT077 Removing release bearing
Bearing drift	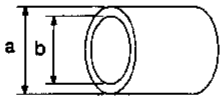 NT474 Installing release bearing **a: 52 mm (2.05 in) dia.** **b: 45 mm (1.77 in) dia.**

NVH Troubleshooting Chart

NACL0027S01

Use the chart below to help you find the cause of the problem. The numbers indicate the priority of the likely cause of the problem. Check each part in order. If necessary, repair or replace these parts.

CLUTCH

NACL0027S0101

Reference page		CL-6	CL-7	CL-8	CL-9	Refer to EM section.	CL-11	CL-13	CL-13	CL-13	CL-13	CL-13	CL-13	CL-13	CL-13	CL-13	CL-13	CL-13	CL-14
SUSPECTED PARTS (Possible cause)		CLUTCH PEDAL (Free play out of adjustment)	CLUTCH LINE (Air in line)	MASTER CYLINDER PISTON CUP (Damaged)	OPERATING CYLINDER PISTON CUP (Damaged)	ENGINE MOUNTING (Loose)	RELEASE BEARING (Worn, dirty or damaged)	CLUTCH DISC (Out of true)	CLUTCH DISC (Runout is excessive)	CLUTCH DISC (Lining broken)	CLUTCH DISC (Dirty or burned)	CLUTCH DISC (Oily)	CLUTCH DISC (Worn out)	CLUTCH DISC (Hardened)	CLUTCH DISC (Lack of spline grease)	DIAPHRAGM SPRING (Damaged)	DIAPHRAGM SPRING (Out of tip alignment)	PRESSURE PLATE (Distortion)	FLYWHEEL (Distortion)
Symptom	Clutch grabs/chatters					1			2			2	2	2			2		
	Clutch pedal spongy		1	2	2														
	Clutch noisy						1												
	Clutch slips	1										2	2			3		4	5
	Clutch does not disengage	1	2	3	4			5	5	5	5	5			5	6	6	7	

Components

NACL0004

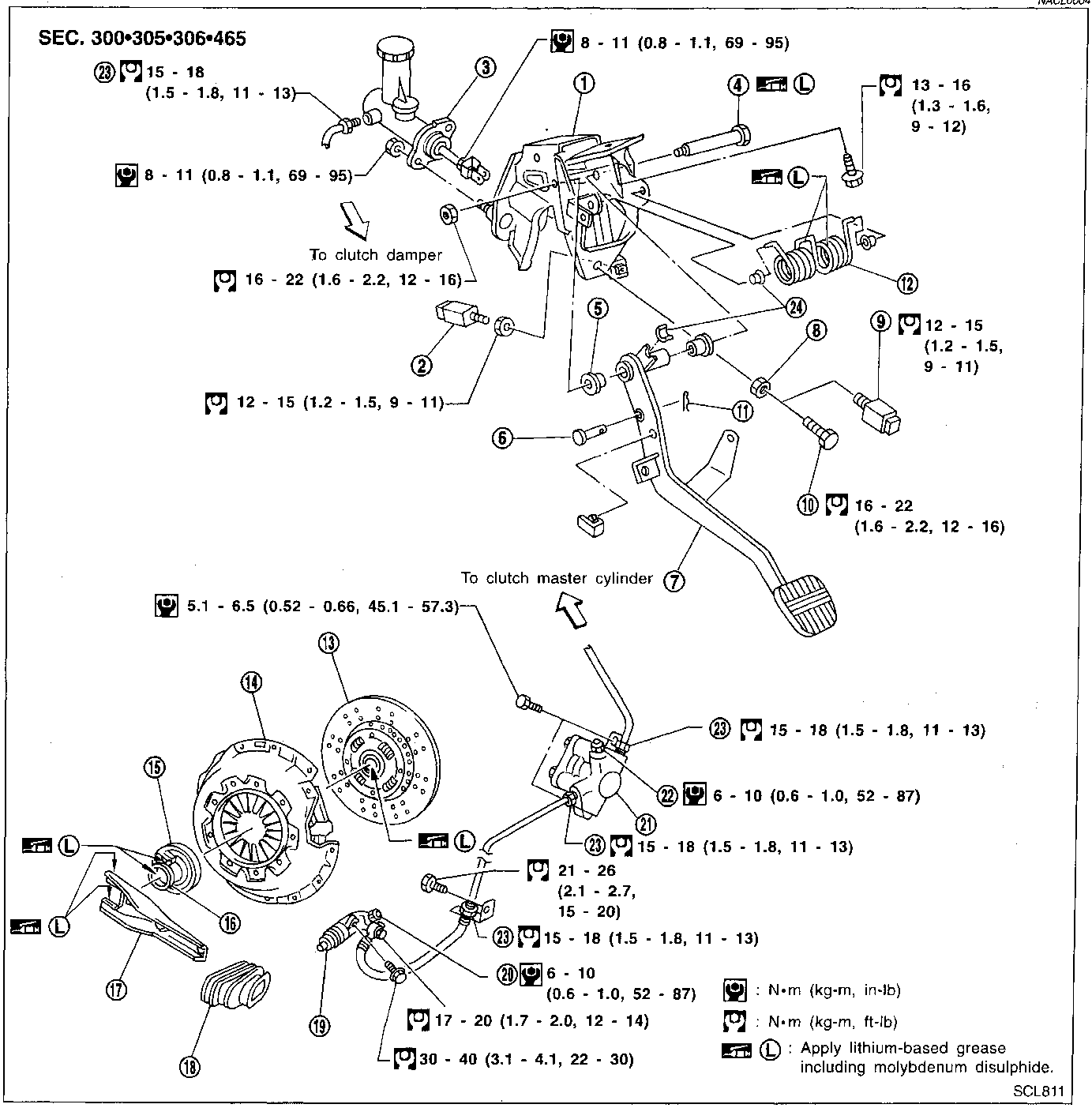

1. Clutch pedal bracket
2. Clutch interlock switch
3. Clutch master cylinder
4. Fulcrum pin
5. Bushing
6. Clevis pin
7. Clutch pedal
8. Lock nut
9. ASCD cancel switch
10. Pedal stopper
11. Snap pin
12. Assist spring
13. Clutch disc
14. Clutch cover
15. Release bearing
16. Release bearing sleeve
17. Withdrawal lever
18. Dust boot
19. Operating cylinder
20. Air bleeder
21. Clutch damper
22. Air bleeder
23. Flare nut
24. Bushing

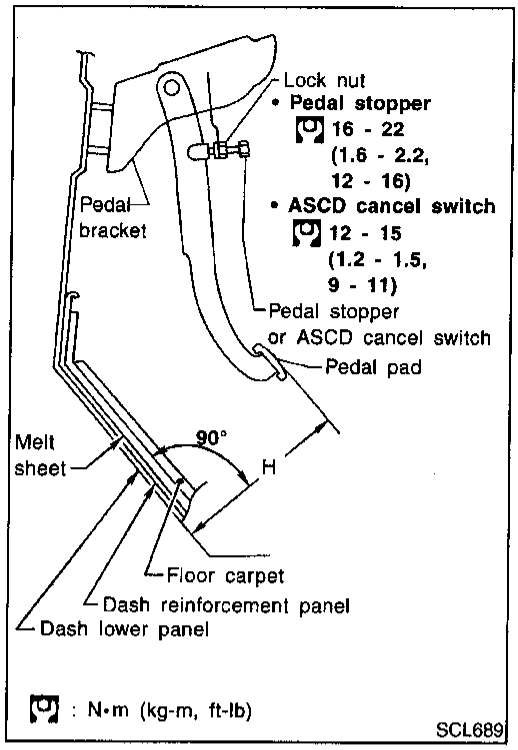

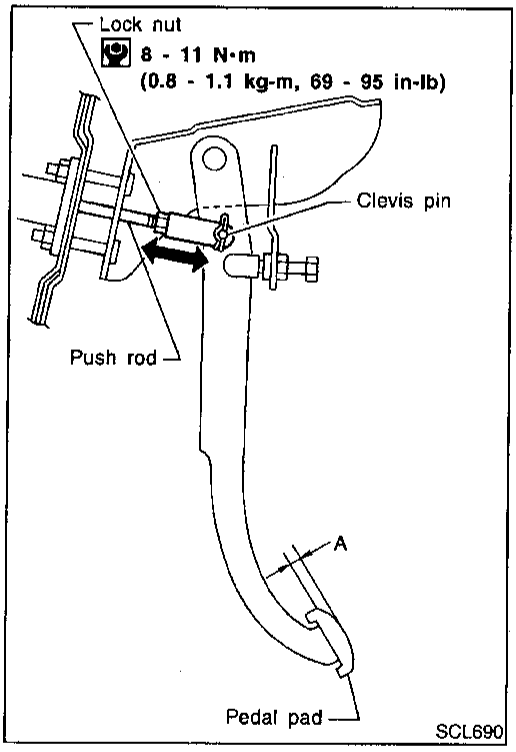

Inspection and Adjustment

NACL0005

ADJUSTING CLUTCH PEDAL

NACL0005S01

1. Adjust pedal height with pedal stopper or ASCD cancel switch.

   Pedal height "H":

   186 - 196 mm (7.32 - 7.72 in)

2. Adjust pedal free play with master cylinder push rod. Then tighten lock nut.

   Pedal free play (measured at pedal pad) "A":

   9 - 16 mm (0.35 - 0.63 in)

Pedal free play means the following total measured at position of pedal pad:

- **Play due to clevis pin and clevis pin hole in clutch pedal.**

3. Make sure that clevis pin can rotate smoothly. If not, readjust pedal free play with master cylinder push rod.

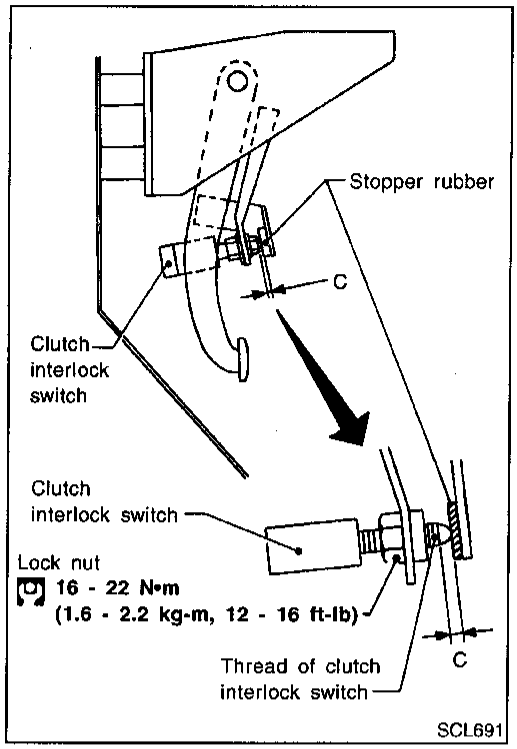

— Models with Clutch Interlock System —

NACL0005S0101

1. Adjust clearance "C" shown in the figure while fully depressing clutch pedal.

   Clearance C:

   0.3 - 1.0 mm (0.012 - 0.039 in)

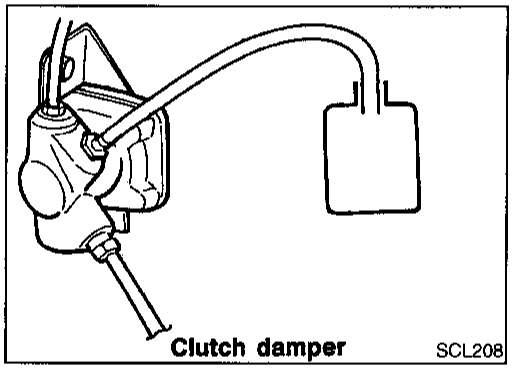

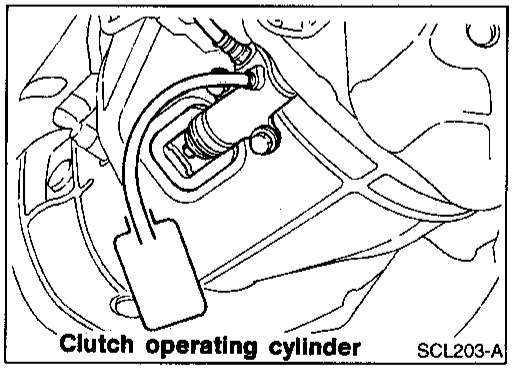

AIR BLEEDING PROCEDURE

NACL0005S02

1. Bleed air from clutch damper according to the following procedure.

- **Carefully monitor fluid level at master cylinder during bleeding operation.**

a. Top up reservoir with recommended brake fluid.
b. Connect a transparent vinyl tube to air bleeder valve.
c. Slowly depress the clutch pedal to its full stroke and release it completely. Repeat this operation several times at 2 to 3 seconds intervals.
d. Open the air bleeder with the clutch pedal fully depressed.
e. Close the air bleeder.
f. Release the clutch pedal and wait at least 5 seconds.
g. Repeat steps c through f mentioned above, then air bubbles will no longer appear at the damper in the brake fluid.

2. Bleed air from clutch operating cylinder according to the above procedure.
3. Repeat the above bleeding procedure 1 and 2 several times.

Components

NACL0006

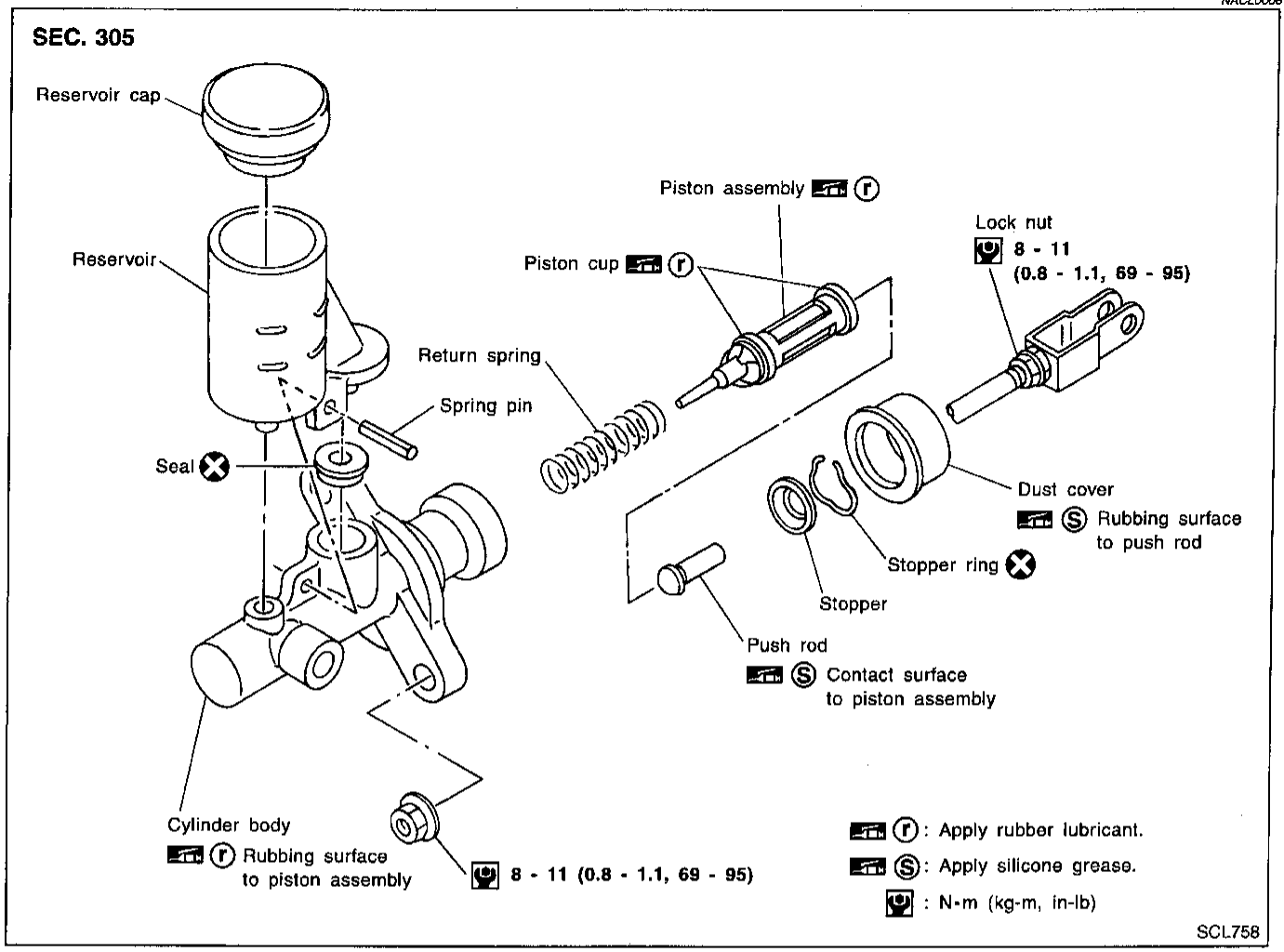

Disassembly and Assembly

NACL0007

- When removing and installing stopper ring, pry it off with screwdriver while pushing push rod into cylinder.

Inspection

NACL0008

Check the following items, and replace if necessary.

- Rubbing surface of cylinder and piston, for uneven wear, rust or damage
- Piston with piston cup, for wear or damage
- Return spring, for wear or damage
- Dust cover, for cracks, deformation or damage
- Reservoir, for deformation or damage

Components

NACL0009

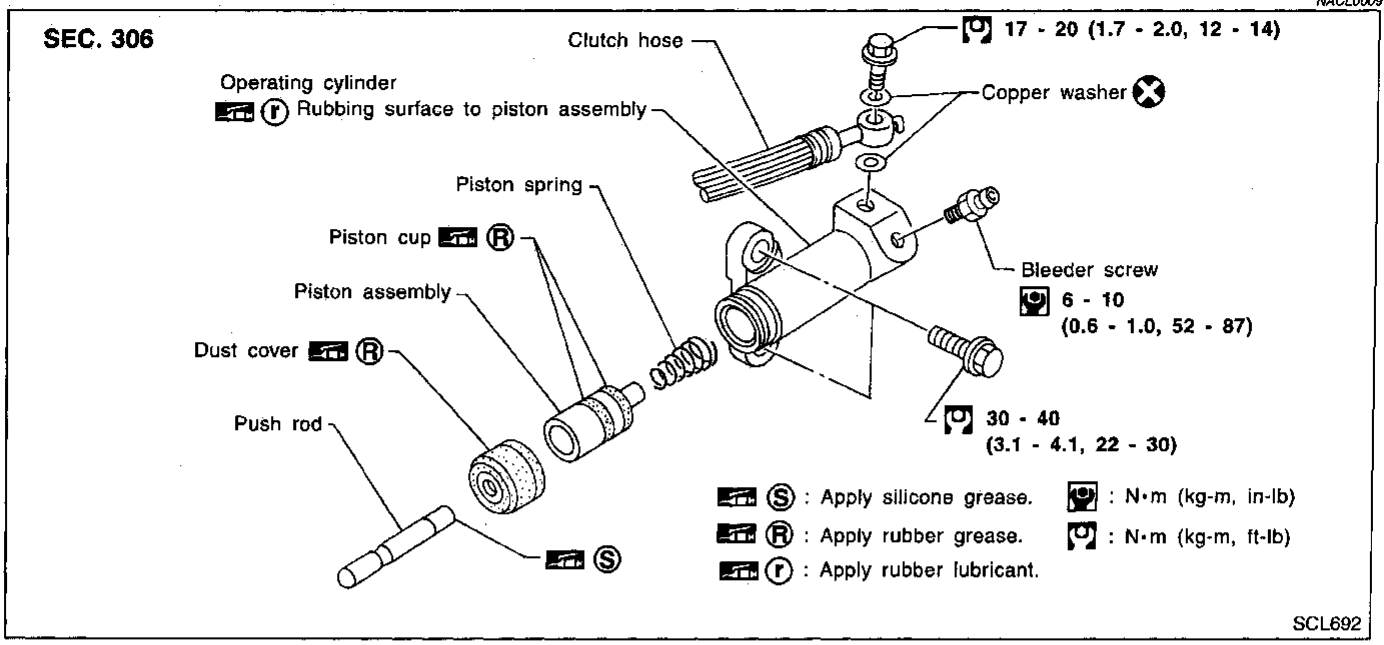

Inspection

NACL0010

Check the following items, and replace if necessary.

- Rubbing surface of cylinder and piston, for uneven wear, rust or damage
- Piston with piston cup, for wear or damage
- Piston spring, for wear or damage
- Dust cover, for cracks, deformation or damage

Components

NACL0011

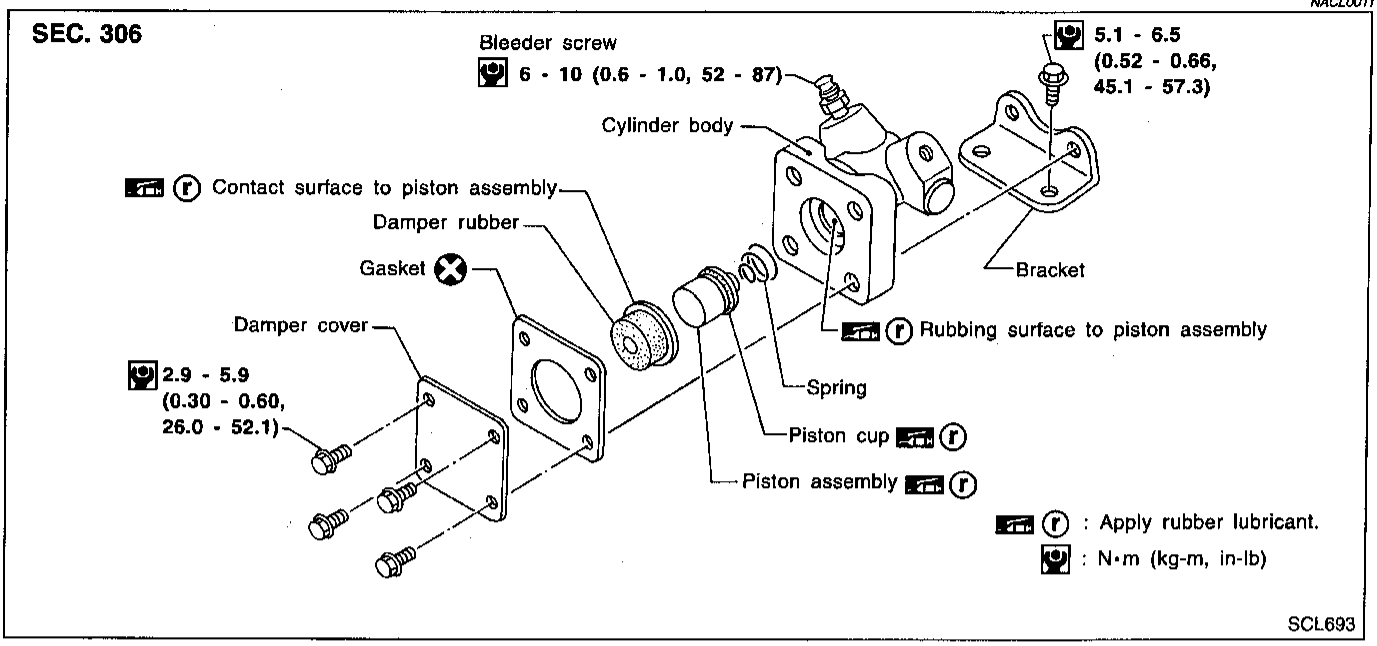

Inspection

NACL0012

Check the following items, and replace if necessary.

- Rubbing surface of cylinder and piston, for uneven wear, rust or damage
- Piston with piston cup, for wear or damage
- Damper rubber and plate for cracks, deformation or damage
- Piston spring, for wear or damage

Components

NACL0013

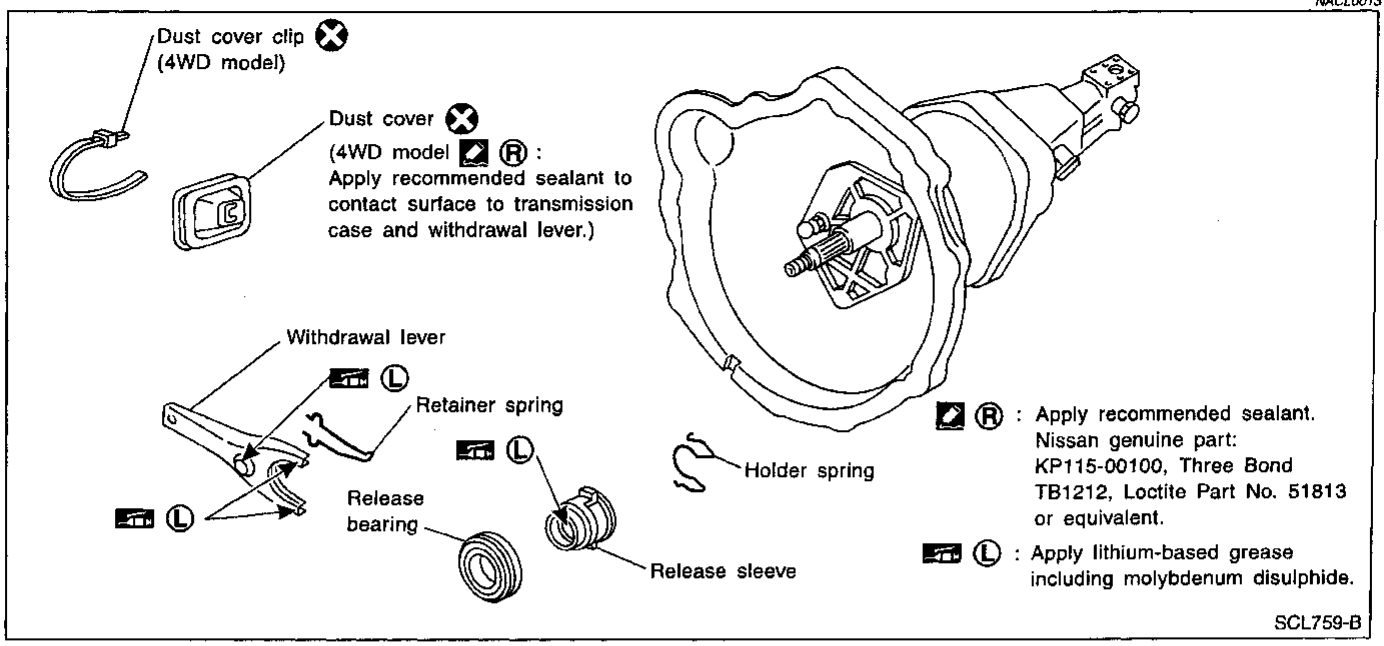

Removal and Installation

NACL0014

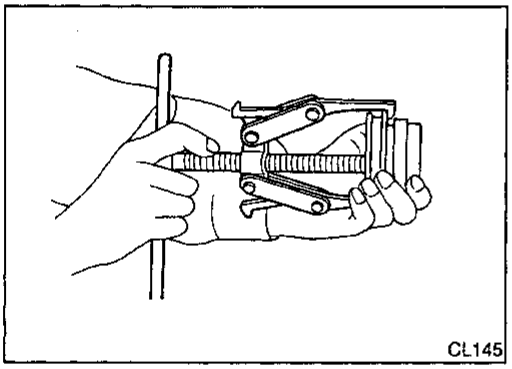

- Remove release bearing.

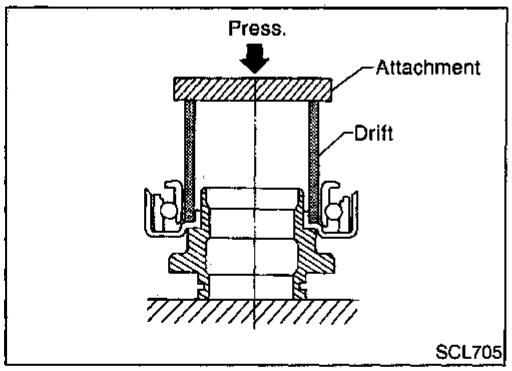

- Install release bearing with suitable drift.

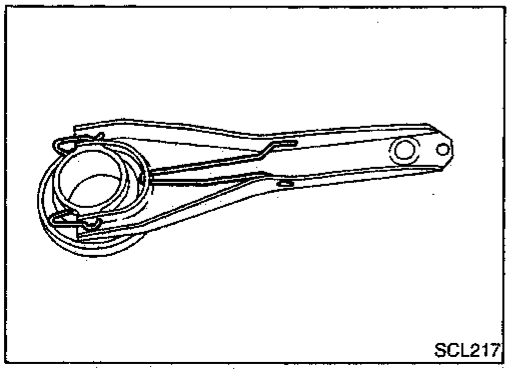

- Install retainer spring and holder spring.

Inspection

NACL0015

Check the following items, and replace if necessary.

- Release bearing, to see that it rolls freely and is free from noise, cracks, pitting or wear
- Release sleeve and withdrawal lever rubbing surface, for wear, rust or damage

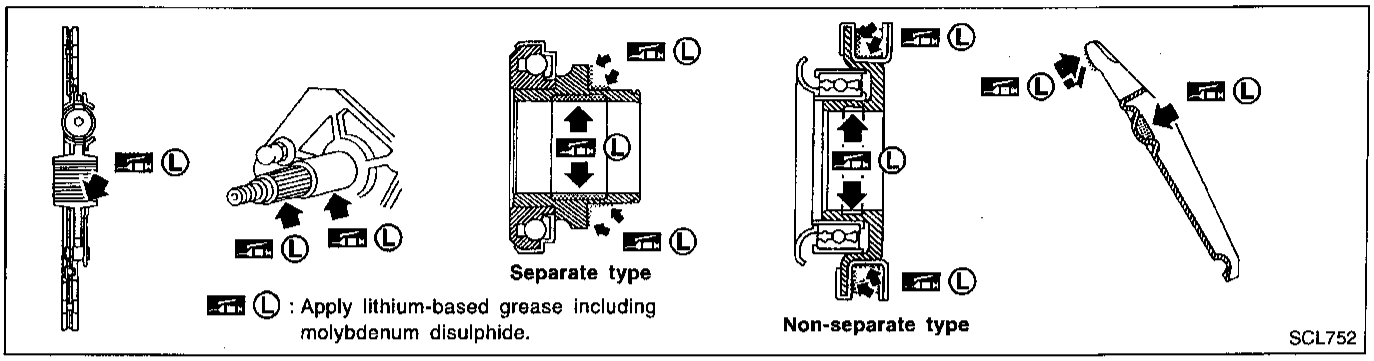

Lubrication

NACL0016

- Apply recommended grease to contact surface and rubbing surface.
- **Too much lubricant might damage clutch disc facing damage.**

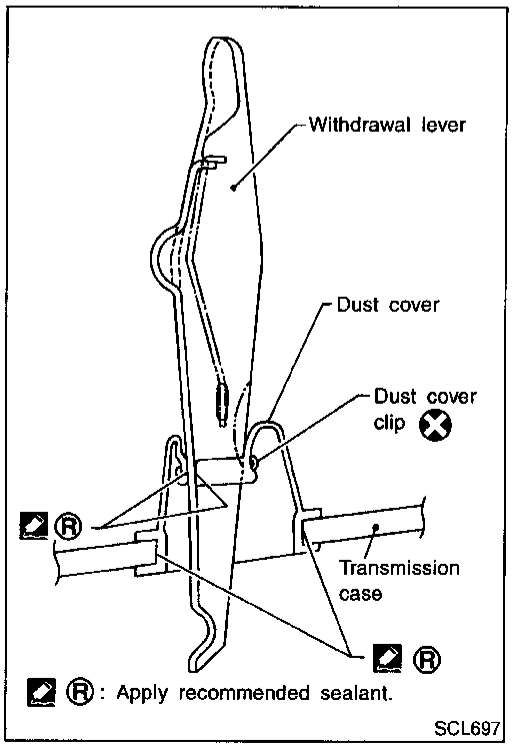

Waterproof — for 4WD Model

NACL0017

- Apply recommended sealant to contact surface of dust cover to transmission case and withdrawal lever and then install dust cover clip.

  Recommended sealant: Nissan genuine part KP115-00100, Three Bond TB1212, Loctite Part No. 51813 or equivalent.

Components

NACL0018

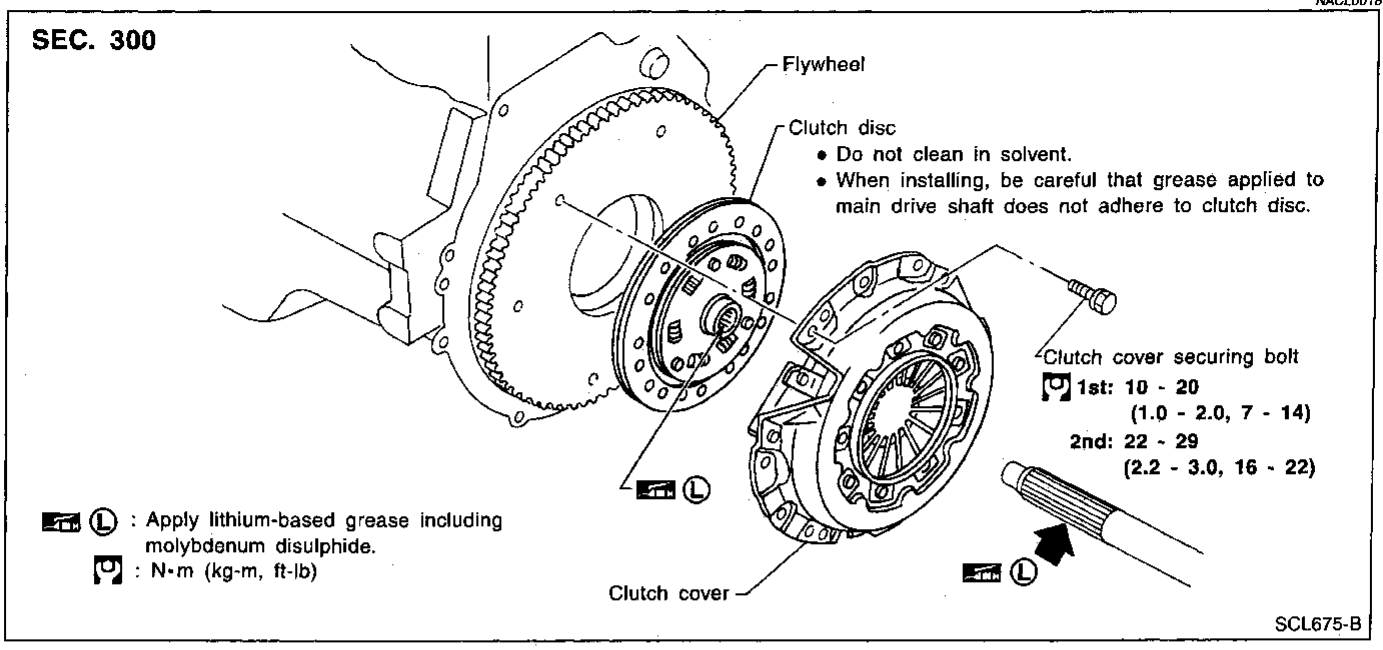

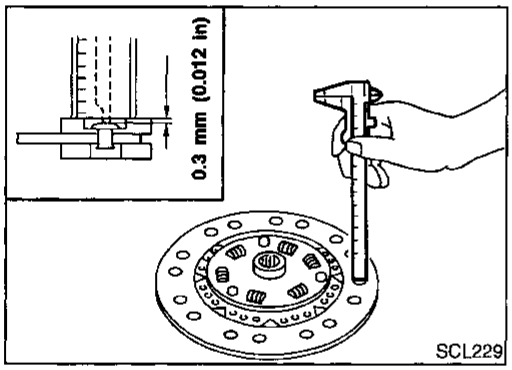

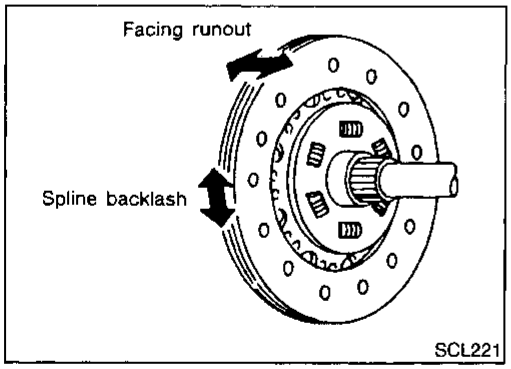

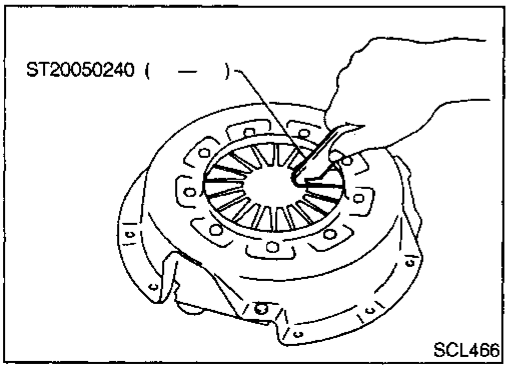

Inspection and Adjustment

NACL0019

CLUTCH DISC

NACL0019S01

Check the following items, and replace if necessary.

- Clutch disc, for burns, discoloration, oil or grease leakage
- Clutch disc, for wear of facing

  Wear limit of facing surface to rivet head:
  0.3 mm (0.012 in)

- Clutch disc, for backlash of spline and runout of facing

  Maximum backlash of spline (at outer edge of disc):
  1.0 mm (0.039 in)
  Runout limit:
  1.0 mm (0.039 in)
  Distance of runout check point (from hub center):
  120 mm (4.72 in)

CLUTCH COVER AND FLYWHEEL

NACL0019S02

- Check clutch cover, installed on vehicle, for uneven diaphragm spring toe height.

  Uneven limit:
  0.5 mm (0.020 in)

- If out of limit, adjust the height with Tool.

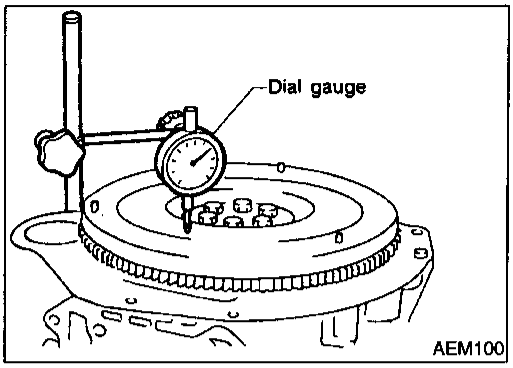

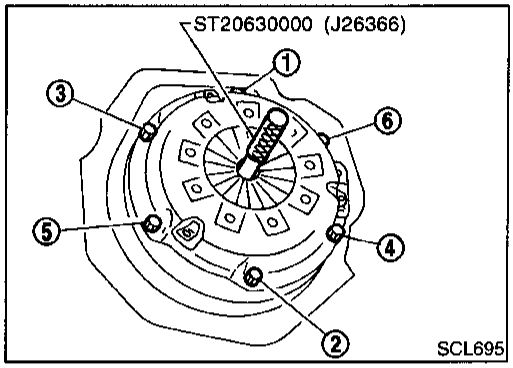

FLYWHEEL INSPECTION

NACL0019S03

CAUTION:
Do not allow any magnetic materials to contact the ring gear teeth.

- Inspect contact surface of flywheel for slight burns or discoloration. Clean flywheel with emery paper.
- Check flywheel runout.

  Maximum allowable runout:

  Refer to EM section ("Inspection", "CYLINDER BLOCK").

Installation

NACL0020

- Apply recommended grease to contact surface of splines.
- **Too much lubricant may damage clutch disc facing.**
- Insert Tool into clutch disc hub when installing clutch cover and disc.
- Be careful not to allow grease to contaminate clutch facing.
- Tighten bolts in numerical order, in two steps.

  First step:

  : 10 - 20 N·m (1.0 - 2.0 kg-m, 7 - 14 ft-lb)

  Final step:

  : 22 - 29 N·m (2.2 - 3.0 kg-m, 16 - 22 ft-lb)

Clutch Control System

NACL0028

Type of clutch control	Hydraulic

Clutch Master Cylinder

NACL0021

Inner diameter	15.87 mm (5/8 in)

Clutch Operating Cylinder

NACL0022

Inner diameter	19.05 mm (3/4 in)

Clutch Damper

NACL0026

Inner diameter	19.05 mm (3/4 in)

Clutch Disc

NACL0023

Unit: mm (in)

Model	250
Facing size (Outer dia. x inner dia. x thickness)	250 x 160 x 3.5 (9.84 x 6.30 x 0.138)
Thickness of disc assembly With load	7.9 - 8.3 (0.311 - 0.327) with 4,904 N (500 kg, 1,103 lb)
Wear limit of facing surface to rivet head	0.3 (0.012)
Runout limit of facing	1.0 (0.039)
Distance of runout check point (from hub center)	120 (4.72)
Maximum backlash of spline (at outer edge of disc)	1.0 (0.039)

Clutch Cover

NACL0024

Unit: mm (in)

Model	250
Set-load	5,884 N (600 kg, 1,323 lb)
Diaphragm spring height	36.5 - 38.5 (1.437 - 1.516)
Uneven limit of diaphragm spring toe height	0.5 (0.020)

Clutch Pedal

NACL0025

Unit: mm (in)

Pedal height "H"*	186 - 196 (7.32 - 7.72)
Pedal free play "A" (at pedal pad)	9 - 16 (0.35 - 0.63)
Clearance between pedal stopper bracket and threaded end of clutch interlock switch (when depressing clutch pedal fully.)	0.3 - 1.0 (0.012 - 0.039)

*: Measured from surface of dash lower panel to pedal pad.