SERVICE MANUAL

DATSUN 280Z
MODEL S30 SERIES

SECTION PD

PROPELLER SHAFT & DIFFERENTIAL CARRIER

PD

FIND

NISSAN

NISSAN MOTOR CO., LTD.
TOKYO, JAPAN

PROPELLER SHAFT

CONTENTS

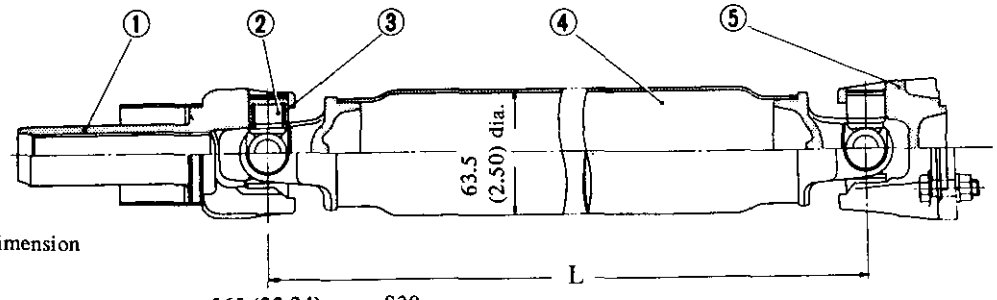

1 Sleeve yoke assembly
2 Journal assembly
3 Bearing race assembly
4 Propeller shaft tube assembly
5 Flange yoke

L dimension

Unit: mm (in)

565 (22.24): S30
865 (34.06): GS30 (2 + 2 seats)

Fig. PD-1 Cross-sectional view of propeller shaft

DESCRIPTION

The propeller shaft is a 2-joint type.

The propeller shaft and universal joint assembly are carefully balanced during original assembly; that is, the dynamic unbalance is under 35 gr-cm (0.5 in-oz) at 5,800 rpm.

The length of propeller shafts differs for S30 and GS30 (2 + 2 seats) models.

If the propeller shaft is found damaged, replace it as an assembly. When removing or installing the propeller shaft assembly, be careful not to drop it.

INSPECTION

1. Check journal for axial play. If play exists, replace propeller shaft assembly.

Note: Journal cannot be disassembled.

2. Check the propeller shaft tube surface for dents or cracks. If necessary, replace propeller shaft assembly.

REMOVAL

1. Raise car on hoist.

Remove bolts securing insulator and put insulator on exhaust tube.

2. Scribe match marks both on propeller shaft and companion flange so that shaft can be reinstalled in the original position.
3. Remove bolts securing shaft to companion flange.
4. Draw out propeller shaft sleeve yoke from transmission by moving shaft rearward, passing it under rear axle.

Watch for oil leakage from transmission rear end. Take proper action if oil leak is discovered.

Note: Remove propeller shaft carefully so as not to damage the spline, sleeve yoke or rear oil seal.

INSTALLATION

To install, reverse the foregoing removal procedure.

Align propeller shaft with companion flange using reference marks prescribed in "Removal" procedure and tighten them with bolts.

Tightening torque:
4.0 to 4.5 kg-m
(29 to 33 ft-lb)

CHECKING AND CORRECTING UNBALANCED PROPELLER SHAFT

To check and correct an unbalanced propeller shaft, proceed as follows:

1. Remove undercoating and other foreign material which could upset shaft balance, and check shaft vibration by road test.
2. If shaft vibration is noted during road test, disconnect propeller shaft at differential carrier companion flange, rotate companion flange 180 degrees and reinstall propeller shaft.
3. Again check shaft vibration. If vibration still persists, replace propeller shaft assembly.

SERVICE DATA AND SPECIFICATIONS

Permissible dynamic unbalance	gr-cm (in-oz)	35 (0.5) at 5,800 rpm
Axial play of spider journal	mm (in)	0 (0)
Journal swinging torque	kg-cm (in-lb)	2.4 to 3.3 (2.1 to 2.9)

Tightening torque kg-m (ft-lb)

Propeller shaft to companion flange bolt ..... 4.0 to 4.5 (29 to 33)

TROUBLE DIAGNOSES AND CORRECTIONS

Condition	Probable cause	Corrective action
Vibration at medium or high speed	Worn or damaged universal joint needle bearing.	Replace propeller shaft assembly.
	Unbalance due to bent or dented propeller shaft.	Replace propeller shaft assembly.
	Loose propeller shaft installation.	Retighten.
	Worn transmission rear extension bushing.	Replace.
	Undercoating or mud on the shaft causing unbalance.	Clean shaft.
	Tire unbalance.	Balance wheel and tire assembly.
	Balance weights missing.	Replace.
Knocking sound on propeller shaft while starting or noise while coasting.	Worn or damaged universal joint.	Replace propeller shaft assembly.
	Worn sleeve yoke and main shaft spline.	Replace propeller shaft assembly.
	Loose propeller shaft installation.	Retighten.
Scraping noise	Dust cover on sleeve yoke rubbing on transmission rear extension. Dust cover on companion flange rubbing on differential carrier.	Straighten dust cover to remove interference.

DIFFERENTIAL CARRIER

CONTENTS

DESCRIPTION

The differential gear carrier assembly has a hypoid type drive pinion and ring gear set with a gear ratio of 3.545 for all models.

The drive pinion is mounted with one ball bearing and two tapered roller bearings which are preloaded by pinion bearing adjusting spacer and washer during assembly.

The drive pinion is adjusted by a washer located between a shoulder of the drive pinion and the rear bearing.

The differential case is supported in the carrier by two tapered roller side bearings. These bearings are preloaded with an interference fit of 0.1 mm (0.0039 in) to the final drive housing. The side bearing adjustment is properly made by washer(s) inserted between the housing and side bearings. The differential case assembly is positioned for proper ring gear-to-drive pinion backlash by varying these washers. The ring gear is bolted to the differential case. The case houses two side gears in mesh with two pinions mounted on a pinion mate shaft. The pinion mate shaft is anchored in the case by lock pin. The pinions and side gears are backed by thrust washers.

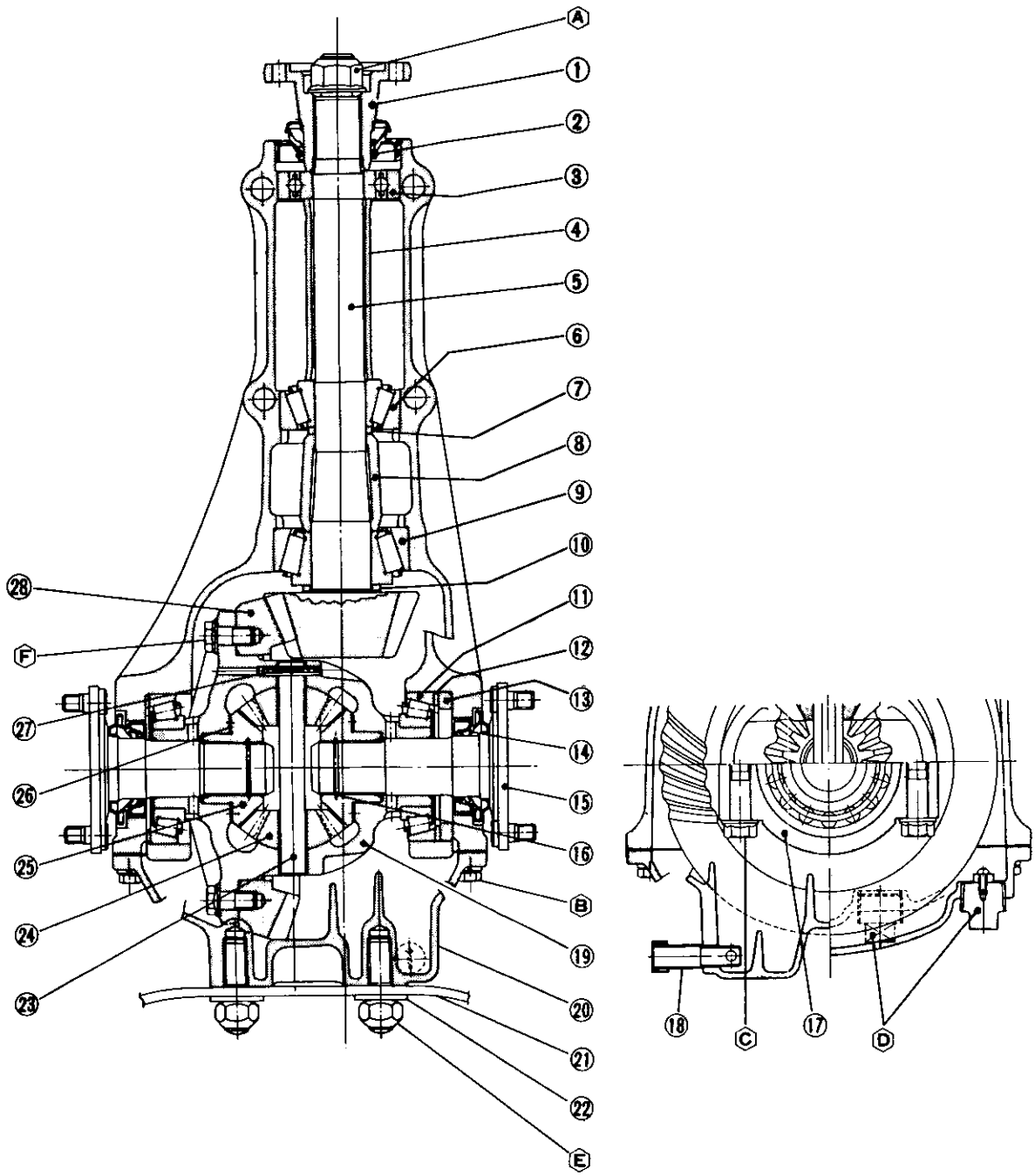

1 Companion flange
2 Front oil seal
Supply multi-purpose grease to oil seal lip when assembling
3 Front pilot bearing
4 Front pilot bearing spacer
5 Drive pinion
6 Pinion front bearing
7 Pinion bearing adjusting washer
Adjust pinion bearing preload by selecting ⑦ and ⑧
8 Pinion bearing adjusting spacer
9 Pinion rear bearing
10 Pinion height adjusting washer
Adjust pinion height by selecting ⑩.
11 Side bearing
12 Side bearing adjusting washer
Adjust side bearing preload and ring gear-to-drive pinion backlash by selecting ⑫.
13 Side bearing spacer
14 Side oil seal
Supply multi-purpose grease to oil seal lip when assembling
15 Side flange
16 Side flange circlip
17 Side bearing cap
18 Breather
Install with an arrow towards front.
19 Differential case
20 Rear cover
21 Differential rear mounting member
22 Special washer
23 Pinion mate shaft
24 Pinion mate
25 Side gear
26 Thrust washer
Adjust the pinion mate-to-side gear backlash (or the clearance between the rear face of side gear and thrust washer) to 0.1 to 0.2 mm (0.0039 to 0.0079 in) by ㉖
27 Lock pin
28 Ring gear

Tightening torque (T) of bolts and nuts kg-m (ft-lb)
Ⓐ T : 19 to 22 (137 to 159)
Ⓑ T : 1.6 to 2.4 (12 to 17)
Ⓒ T : 9 to 10 (65 to 72)
Ⓓ T : 4.2 to 6.9 (30 to 50)
Ⓔ T : 7.5 to 9.5 (54 to 69)
Ⓕ T : 6 to 7 (43 to 51)
Using locking agent [Locktite (stud lock) or equivalent]

PD369

Fig. PD-2 Cross-sectional view of differential carrier

REMOVAL

Service procedures are covered under Gear Carrier in Section RA.

PRE-DISASSEMBLY INSPECTION

Differential carrier should be inspected before parts except rear cover are removed from it.

These inspections are helpful in finding the cause of the problem and in determining necessary corrections.

1. Using three 45 mm (1.77 in) spacers, mount carrier on Gear Carrier Attachment ST06270002.

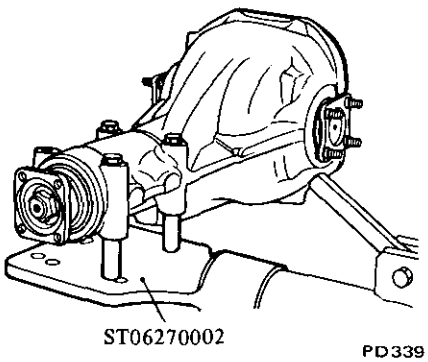

Fig. PD-3 Mounting differential carrier

If the tool ST06270001 is used, drill an additional 14 mm (0.55 in) diameter hole on the position shown in Figure PD-4.

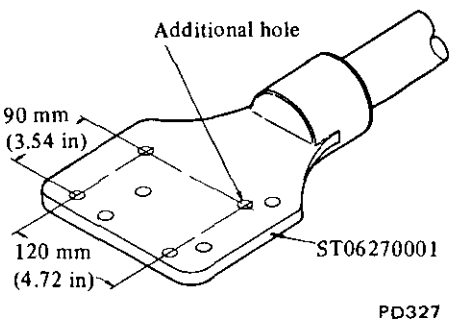

Fig. PD-4 Location of additional hole

2. Remove rear cover.
3. Visually inspect parts for wear or damage.
4. Rotate gears checking for any roughness which would indicate damaged bearings or chipped gears. Check gear teeth for scoring or signs of abnormal wear. Measure preload of drive pinion.

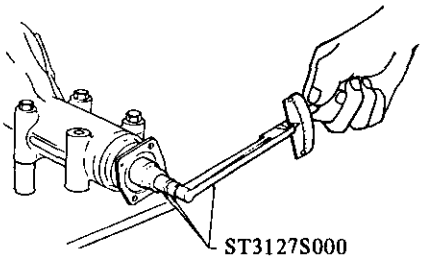

Fig. PD-5 Measuring pinion preload

5. Set up a dial indicator and check the backlash at several points around ring gear. Backlash should be within 0.13 to 0.18 mm (0.0051 to 0.0071 in).

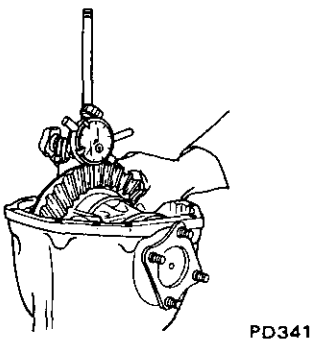

Fig. PD-6 Measuring the backlash of ring gear and pinion

6. Check gear tooth contact with a mixture of powdered red lead and oil.

For the tooth contact pattern, see page PD-11 – Contact Pattern.

DISASSEMBLY

1. Drive side flange out with pry bar. See Figure PD-7.

Note: Hold side flange with hand to prevent it from jumping out of carrier.

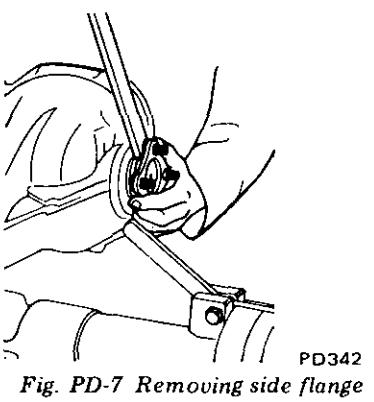

Fig. PD-7 Removing side flange

2. Put match marks on side bearing caps and carrier.
3. Loosen side bearing cap bolts and remove bearing caps.

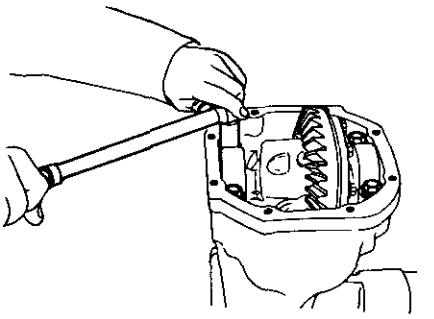

Fig. PD-8 Removing side bearing cap

4. Using slide hammer (HT72400000), lift differential case assembly out. See Figure PD-9.

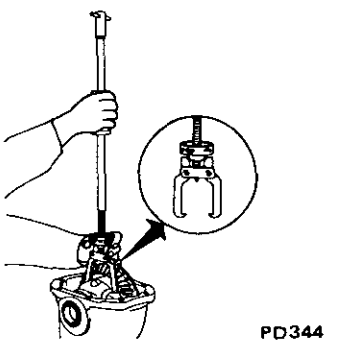

Fig. PD-9 Removing differential case assembly

Note: Care should be taken not to confuse the left and right hand bearing caps and bearing outer races so that parts may be installed to the original position.

5. Loosen drive pinion nut, holding companion flange with Drive Pinion Flange Wrench ST31520000 and pull off companion flange using a suitable puller. See Figures PD-10 and PD-11.

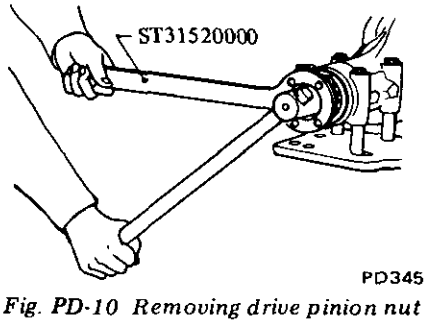

Fig. PD-10 Removing drive pinion nut

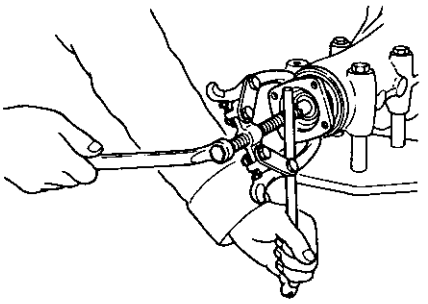

PD346

Fig. PD-11 Removing companion flange

6. Extract drive pinion from carrier using a press. Take out drive pinion together with rear bearing inner race, bearing spacer and adjusting washer.
7. Remove oil seal using Gear Carrier Oil Seal Puller ST33290001.

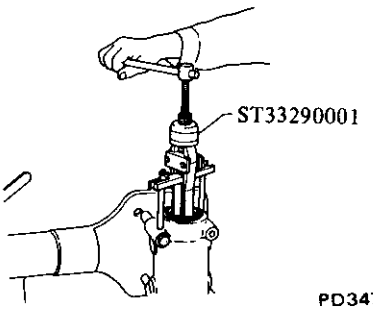

PD347

Fig. PD-12 Removing front oil seal

Note: Oil seal must not be reused.

8. Remove pilot bearing together with pilot bearing spacer and front bearing inner race using Pilot Bearing Drift KV38100401. See Figure PD-13.

9. Remove side oil seal.

Note: Oil seal must not be reused.

10. Hold rear bearing inner race with Drive Pinion Rear Bearing Inner Race Puller ST30031000 and extract from drive pinion with a press. See Figure PD-14.

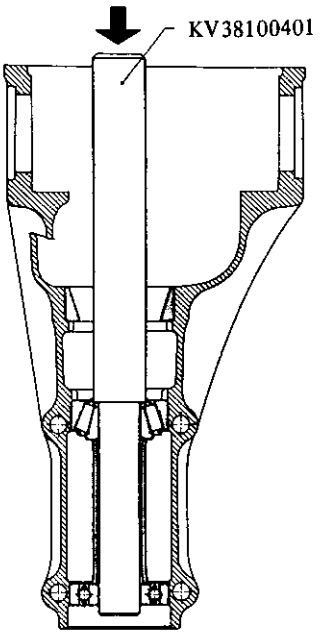

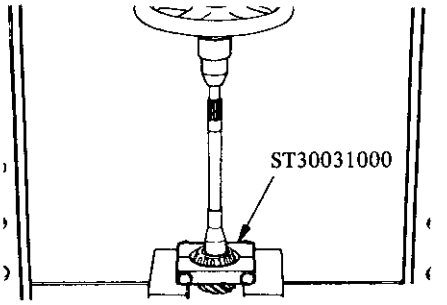

PD179

Fig. PD-14 Removing pinion rear bearing inner race

11. To remove front and rear bearing outer races, put a drift to race surface, and withdraw them by tapping the top of drift with a hammer. See Figure PD-15.

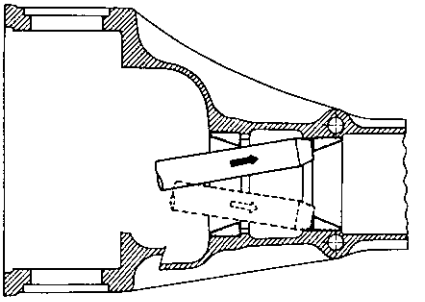

PD349

Fig. PD-15 Removing pinion bearing outer races

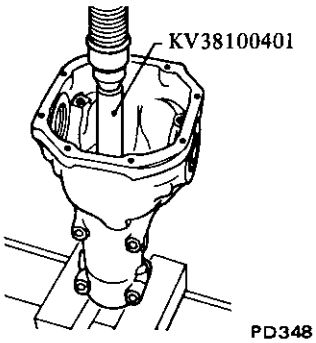

PD348

Fig. PD-13 Removing pilot bearing

DISASSEMBLY OF DIFFERENTIAL CASE

1. Extract bearing using Differential Side Bearing Puller ST3306S001 (set of ST33051001 and ST33061000). See Figure PD-16.

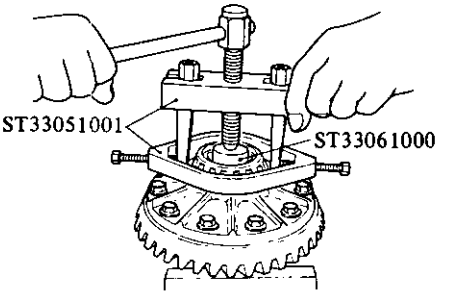

PD350

Fig. PD-16 Removing side bearing

Notes:

a. **Securely attach puller to bearing inner race, utilizing two grooves in differential case.**
b. **Be careful not to confuse the left and right hand parts.**

2. Remove ring gear by loosening ring gear bolts.

Note: Loosen bolts diagonally.

Punch off pinion mate shaft lock pin from ring gear side using Sold Punch ST23550001.

Note: Lock pin is caulked at pin hole mouth on differential case. Do not punch it off forcibly without checking how it is caulked.

4. Draw out pinion mate shaft and remove pinion mate gears, side gears and thrust washers.

Note: Put marks on gear and thrust washer so that they can be re-installed in their original positions from which they were removed.

INSPECTION

Thoroughly clean all disassembled parts, and examine them to see that they are worn, damaged or otherwise faulty, and how they are affected. Repair or replace all faulty parts, whichever is necessary.

1. Check gear teeth for scoring, cracking or chipping, and make sure that tooth contact pattern indicates correct meshing depth. If any fault is evident, replace parts as required.

Note: Drive pinion and drive gear are supplied for replacement as a set, therefore, should either part be damaged, replace as a set.

2. Check pinion gear shaft, and pinion gear for scores and signs of wear, and replace as required.

Follow the same procedure for side gears and their seats on differential case.

3. Inspect all bearing races and rollers for scoring, chipping or evidence of excessive wear. They should be in tiptop condition such as not worn and with mirror-like surfaces. Replace if there is a shadow of doubt on their efficiency, as an incorrect bearing operation may result in noise and gear seizure.

If you need the information on "Visual Serviceability Standard for Taper Roller Bearing" refer to Section FA for Inspection.

4. Inspect thrust washer faces. Small faults can be corrected with sandpaper. If pinion mate to side gear backlash (or the clearance between side gear and thrust washer) exceeds limits 0.1 to 0.2 mm (0.0039 to 0.0079 in), replace thrust washers.

5. Inspect carrier and differential case for cracks or distortion. If either condition is evident, replace faulty parts.

6. As a general rule, oil seal should be replaced at each disassembly.

ASSEMBLY AND ADJUSTMENT

Assembly can be done in the reverse order of disassembly. Adherence to the following directions for adjustment and usage of special tools enable to obtain a perfect differential operation.

PRECAUTIONS IN REASSEMBLY

1. Arrange shims, washers and the like to install them correctly.
2. Thoroughly clean the surfaces on which shims, washers, bearings and bearing retainers are installed.
3. Thoroughly clean oil from ring gear bolt and its hole with "Locktite Lacquic Primer" or equivalent.
4. Apply gear oil when installing bearings.
5. Pack recommended multi-purpose grease into cavity between lips when fitting oil seal.

ASSEMBLY OF DIFFERENTIAL GEAR CASE

1. Assemble pinion mates, side gears and thrust washers in differential case.
2. Fit pinion shaft to differential case so that it meets lock pin holes.
3. Adjust side gear-to-pinion mate backlash or adjust the clearance between the rear face of side gear and thrust washer. See Figure PD-17.

If above procedure is not effective with existing washer, try with other washers.

Normal backlash or clearance:
0.1 to 0.2 mm
(0.0039 to 0.0079 in)

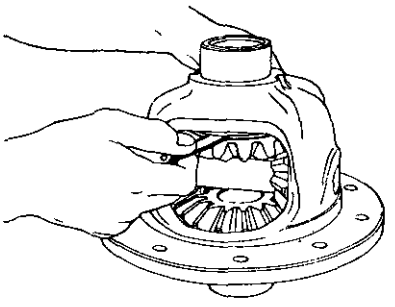

PD023

Fig. PD-17 Measuring clearance

Side gear thrust washer

Thickness mm (in)
0.75 to 0.80 (0.0295 to 0.0315)
0.80 to 0.85 (0.0315 to 0.0335)
0.85 to 0.90 (0.0335 to 0.0354)

4. Lock pinion shaft lock pin using a punch after it is secured in place.
5. Apply oil to gear tooth surfaces and thrust surfaces and check that they turn properly.
6. Place ring gear on differential case and apply a small amount of locking agent [Locktite (stud lock) or equivalent] to the bolts; then install bolts.

Note: Use only genuine ring gear bolts.

7. Tighten bolts in a criss-cross fashion to specified torque, and apply light hammer blows to bolt heads. Again tighten bolts to specified torque.

Tightening torque:
7 to 8 kg-m
(51 to 58 ft-lb)

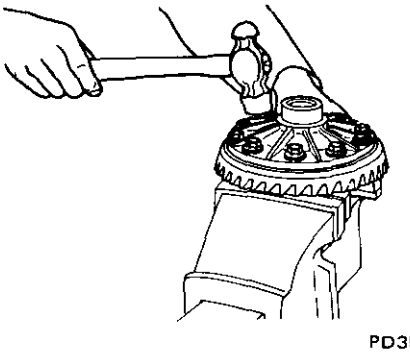

PD351

Fig. PD-18 Tapping bolt heads

8. Measure bearing width with a standard gauge [21.00 mm (0.8268 in) thickness] and a weight block [about 2.5 kg (5.5 lb)] prior to installation. See Figure PD-19.

Standard bearing width:
21.00 mm (0.8268 in)

Bearing width is slightly smaller than 21.00 mm (0.8268 in).

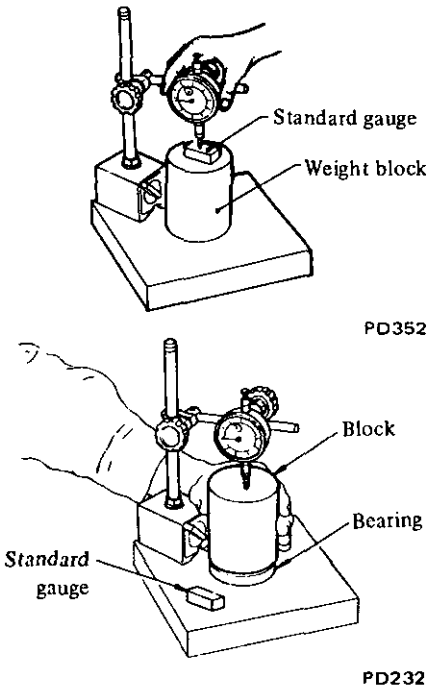

Fig. PD-19 Measuring bearing width

9. Press fit side bearing inner race on differential case with Gear Carrier Side Bearing Drift KV38100300 and Adapter ST33061000. See Figure PD-20.

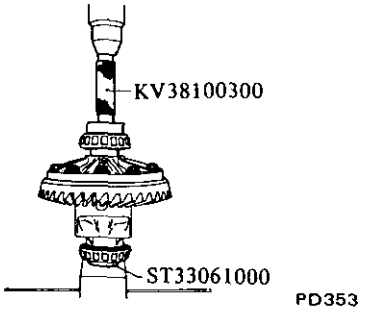

Fig. PD-20 Installing side bearing inner race

ADJUSTMENT OF DRIVE PINION PRELOAD

Adjust drive pinion preload with spacer and washer between front and rear bearing inner races, regardless of thickness of pinion height adjusting washer.

This adjustment must be carried out without oil seal inserted.

1. Press fit front and rear bearing outer races into gear carrier using Drive Pinion Outer Race Drift Set ST30611000, ST30613000 and ST30621000.

Front:	ST30611000 and ST30613000
Rear:	ST30611000 and ST30621000

2. Insert rear bearing inner race into Dummy Shaft KV38100110.
3. Fit drive pinion bearing spacer, washer, front bearing inner race, Dummy Shaft Collar KV38100130 and companion flange in that order on dummy shaft and tighten drive pinion nut to specified torque with Stopper KV38100140. See Figure PD-21.

Tightening torque of pinion nut:
19 to 22 kg-m
(137 to 159 ft-lb)

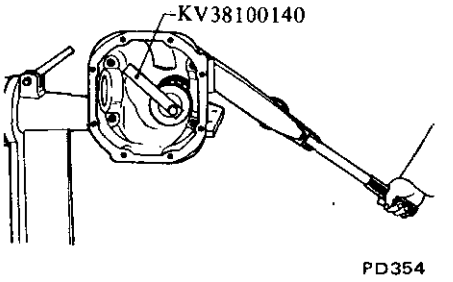

Fig. PD-21 Tightening drive pinion nut

4. Measure pinion bearing preload using Preload Gauge ST3127S000, and select washer and spacer that will provide required preload. See Figure PD-22.

Pinion bearing preload
(without oil seal):
10 to 13 kg-cm
(8.7 to 11.3 in-lb)
At companion flange bolt hole:
2.9 to 3.7 kg
(6.4 to 8.2 lb)

Notes:

a. **Replace bearing washer and spacer with thicker ones if pinion cannot be turned by hand while it is being tightened.**
b. **Preload of old bearing is the same value as that of a new bearing.**

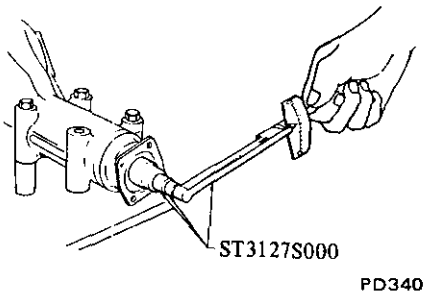

Fig. PD-22 Measuring pinion preload

Pinion bearing adjusting spacer

Length mm (in)
55.10 (2.1693)
55.40 (2.1811)
55.70 (2.1929)
56.00 (2.2047)
56.25 (2.2146)

Pinion bearing adjusting washer

Thickness mm (in)
3.80 to 3.82 (0.1496 to 0.1504)
3.82 to 3.84 (0.1504 to 0.1512)
3.84 to 3.86 (0.1512 to 0.1520)
3.86 to 3.88 (0.1520 to 0.1528)
3.88 to 3.90 (0.1528 to 0.1535)
3.90 to 3.92 (0.1535 to 0.1543)
3.92 to 3.94 (0.1543 to 0.1551)
3.94 to 3.96 (0.1551 to 0.1559)
3.96 to 3.98 (0.1559 to 0.1567)
3.98 to 4.00 (0.1567 to 0.1575)
4.00 to 4.02 (0.1575 to 0.1583)
4.02 to 4.04 (0.1583 to 0.1591)
4.04 to 4.06 (0.1591 to 0.5598)
4.06 to 4.08 (0.5598 to 0.1606)
4.08 to 4.10 (0.1606 to 0.1614)

ADJUSTMENT OF DRIVE PINION HEIGHT

Adjust pinion height with washer located between rear bearing inner race and back of pinion gear.

1. Install Height Gauge KV38100120 on carrier with dummy shaft mounted. See Figure PD-23.

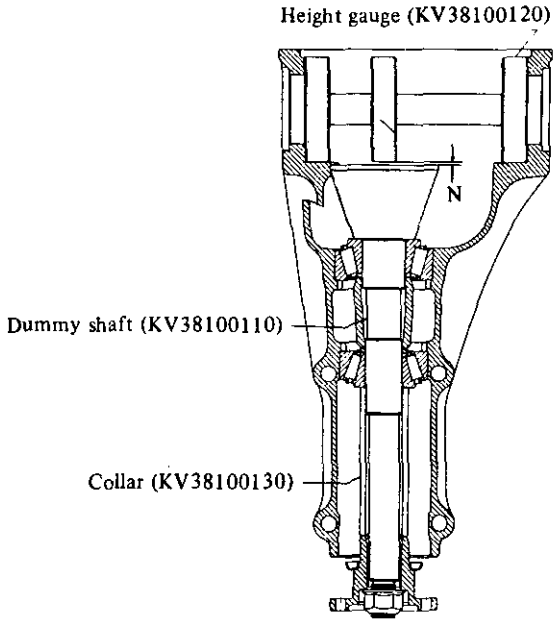

PD355

Fig. PD-23 Measuring the clearance (N)

2. Measure the clearance (N) between the tip end of height gauge and the end surface of dummy shaft, using a thickness gauge. See Figure PD-24.

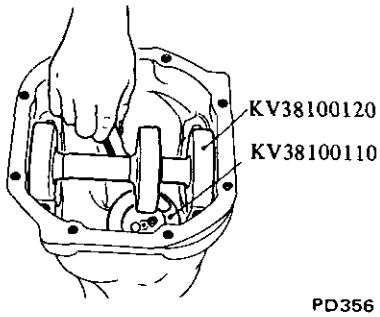

PD356

Fig. PD-24 Adjsuting pinion height

3. The thickness of drive pinion height adjusting washer can be obtained from the following formula:

$$T = N - [(H - D') \times 0.01] + 3.00$$

Where,

T : Required thickness of rear bearing adjusting washers (mm).
N : Measured value with thickness gauge (mm).
H : Figure marked on the drive pinion head. See Figure PD-25.
D' : Figure marked on the dummy shaft.

Figures for H and D' are dimensional variations in a unit of 1/100 mm against each standard measurement.

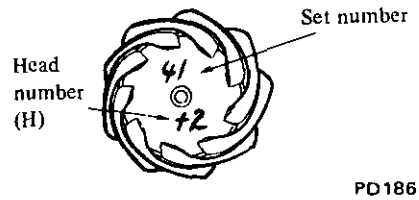

PD186

Fig. PD-25 Variation number on drive pinion

Examples of calculation

Ex. 1 ---

N = 0.23 mm
H = +2, D' = 1

$$\begin{aligned} T &= N - [(H - D') \times 0.01] + 3.00 \\ &= 0.23 - [((+2) - 1) \times 0.01] + 3.00 \\ &= 0.23 - [(2 - 1) \times 0.01] + 3.00 \\ &= 0.23 - [1 \times 0.01] + 3.00 \\ &= 0.23 - 0.01 + 3.00 \\ &= 3.22 \text{ mm} \end{aligned}$$

The correct washer is 3.21 mm thick.

Ex. 2 ---

N = 0.35 mm
H = −1, D' = 2

$$\begin{aligned} T &= N - [(H - D') \times 0.01] + 3.00 \\ &= 0.35 - [((-1) - 2) \times 0.01] + 3.00 \\ &= 0.35 - [(-1 - 2) \times 0.01] + 3.00 \\ &= 0.35 - [(-3) \times 0.01] + 3.00 \\ &= 0.35 - [-0.03] + 3.00 \\ &= 0.35 + 0.03 + 3.00 \\ &= 3.38 \end{aligned}$$

The correct washer is 3.39 mm thick.

Ex. 3 ---

N = 0.27 mm
H = 0, D' = 0

$$\begin{aligned} T &= N - [(H - D') \times 0.01] + 3.00 \\ &= 0.27 - [(0 - 0) \times 0.01] + 3.00 \\ &= 0.27 - [0 \times 0.01] + 3.00 \\ &= 0.27 - 0 + 3.00 \\ &= 3.27 \end{aligned}$$

The correct washer is 3.27 mm thick.

Note: If values signifying H and D' are not given, regard them as zero and compute. After assembly, check to see that tooth contact is correct. If not, readjust.
For the tooth contact pattern, see page PD-11 for Contact Pattern.

Pinion bearing adjusting washer

Thickness mm (in)
3.09 (0.1217)
3.12 (0.1228)
3.15 (0.1240)
3.18 (0.1252)
3.21 (0.1264)
3.24 (0.1276)
3.27 (0.1287)
3.30 (0.1299)
3.33 (0.1311)
3.36 (0.1323)
3.39 (0.1335)
3.42 (0.1346)
3.45 (0.1358)
3.48 (0.1370)
3.51 (0.1382)
3.54 (0.1394)
3.57 (0.1406)
3.60 (0.1417)
3.63 (0.1429)
3.66 (0.1441)
0.05 (0.0020)
0.07 (0.0028)

Note: Pinion height adjustment can be made in a unit of 1/100 mm (4/10,000 in) by selecting either 0.05 mm (0.0020 in) or 0.07 mm (0.0028 in) shim in above chart.

4. Fit determined pinion height adjusting washer in drive pinion, and press fit rear bearing inner race in it using Base ST30901000. See Figure PD-26.

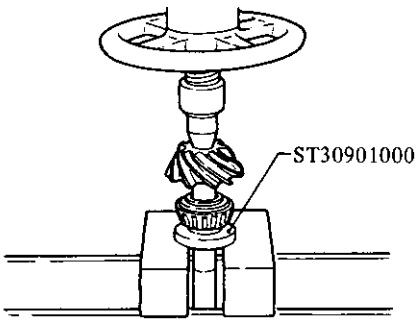

PD092

Fig. PD-26 Pressing rear bearing inner race

Note: Insert washer into pinion with the chamfered side towards gear.

5. Lubricate pinion front and rear bearings. Install drive pinion in gear carrier into which drive pinion bearing spacer and washer, front bearing inner race and front pilot bearing spacer, moreover, pilot bearing and front oil seal are fitted. Fit front oil seal using Gear Carrier Front Oil Seal Drift KV38100500.

6. Fit companion flange on drive pinion, and secure it in position by tightening nut to specified torque confirming preload.

Tightening torque:
19 to 22 kg-m
(137 to 159 ft-lb)

Preload (with oil seal):
11 to 17 kg-cm
(9.5 to 15.0 in-lb)

At companion flange bolt hole:
3.1 to 4.9 kg
(6.8 to 10.8 lb)

Note: If drive pinion lock nut is worn, replace it.

ADJUSTMENT OF SIDE BEARING WASHERS

1. If the hypoid gear set, carrier, differential case or side bearing has been replaced with new part, adjust the side bearing preload with adjusting washer. The required thicknesses of the left and right washers can be obtained from the following formulas:

$$T_1 = (A - C + D - H') \times 0.01 + E + 2.05$$
$$T_2 = (B - D + H') \times 0.01 + F + G + 1.95$$

Where,

T_1 : Required thickness of left side washer (mm).

T_2 : Required thickness of right side washer (mm).

A & B : Figure marked on the gear carrier. See Figure PD-28.

C & D : Figure marked on the differential case. See Figure PD-29.

E & F : These are differences in width of left or right side bearing against the standard width (21.00 mm).

If bearing width is 20.82 mm, this figure will be as follows:

21.00 – 20.82 = 0.18 (mm)

G : This is the difference in thickness of side spacer against the standard width (8.10 mm). If spacer width is 8.02 mm, this figure will be as follows.

H': Figure marked on ring gear. See Figure PD-30.
8.10 – 8.02 = 0.08 (mm)

Figures for A, B, C and D are dimensional variations in a unit of 1/100 mm against each standard measurement.

To measure width of side bearing, see differential case assembly procedure.

Before calculation, determine "G" value by measuring spacer thickness. If spacer is deformed or scratched, replace.

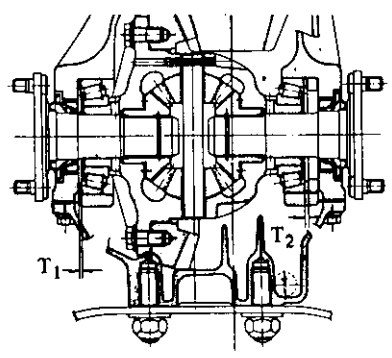

PD357

Fig. PD-27 Thickness of left and right washers

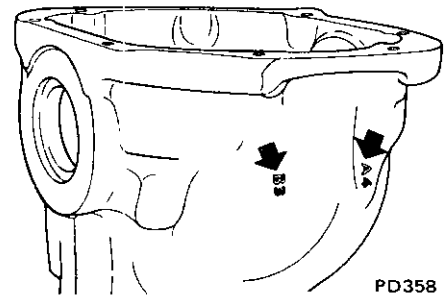

PD358

Fig. PD-28 A & B figure

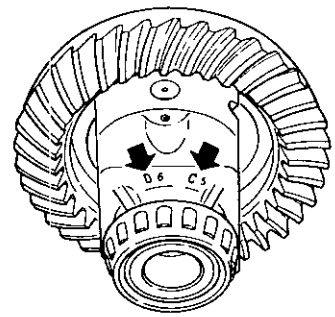

PD359

Fig. PD-29 C & D figure

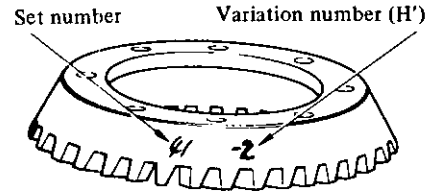

PD190

Fig. PD-30 Variation number on ring gear

Side bearing adjusting washer

Thickness mm (in)
2.00 (0.0787)
2.05 (0.0807)
2.10 (0.0827)
2.15 (0.0846)
2.20 (0.0866)
2.25 (0.0886)
2.30 (0.0906)
2.35 (0.0925)
2.40 (0.0945)
2.45 (0.0965)
2.50 (0.0984)
2.55 (0.1004)
2.60 (0.1024)

Example of calculation

Ex. 1 —

A = 4, B = 3, C = 5, D = 6
E = 0.18 mm, F = 0.15 mm
G = 0.08 mm, H' = –2

Left side:

$T_1 = (A - C + D - H') \times 0.01 + E + 2.05$
$= [4 - 5 + 6 - (-2)] \times 0.01 + 0.18 + 2.05$
$= 7 \times 0.01 + 0.18 + 2.05$
$= 0.07 + 0.18 + 2.05$
$= 2.30$

The correct washer is 2.30 mm thick.

Right side:

$T_2 = (B - D + H') \times 0.01 + F + G + 1.95$
$= [3 - 6 + (-2)] \times 0.01 + 0.15 + 0.08 + 1.95$
$= (-5) \times 0.01 + 0.15 + 0.08 + 1.95$
$= -0.05 + 0.15 + 0.08 + 1.95$
$= 2.13$

The correct washer is 2.15 mm thick.

Ex. 2 —

A = 6, B = 6, C = 5, D = 3
E = 0.17 mm, F = 0.22 mm
G = 0.10 mm, H' = 2

Left side:

$T_1 = (A - C + D - H') \times 0.01 + E + 2.05$
$= (6 - 5 + 3 - 2) \times 0.01 + 0.17 + 2.05$
$= 2 \times 0.01 + 0.17 + 2.05$
$= 0.02 + 0.17 + 2.05$
$= 2.24$

The correct washer is 2.25 mm thick.

Right side:

$T_2 = (B - D + H') \times 0.01 + F + G + 1.95$
$= (6 - 3 + 2) \times 0.01 + 0.22 + 0.10 + 1.95$
$= 5 \times 0.01 + 0.22 + 0.10 + 1.95$
$= 0.05 + 0.22 + 0.10 + 1.95$
$= 2.32$

The correct washer is 2.30 mm thick.

Note: If values signifying A, B, C and D are not given, regard them as zero and compute.
After assembly, check to see that preload and backlash are correct. If not, readjust.

2. Install differential case assembly with side bearing outer races into carrier.
3. Insert left and right side bearing preload adjusting washers in place between side bearings and housing.
4. Drive in side bearing spacer between R.H. washer and housing with Side Bearing Spacer Drift KV38100600. See Figure PD-31. If too great or too small a driving force is required, check to be sure that calculation and side bearing width are correct.

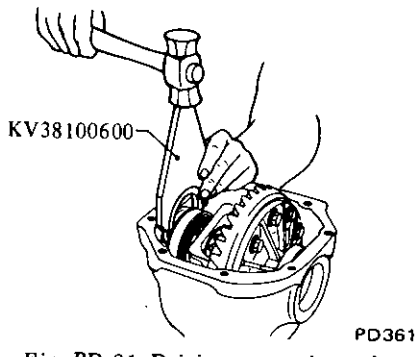

Fig. PD-31 Driving spacer into place

Note: When driving spacer into place, be careful not to tilt side bearing outer race to either side.

5. Align mark on bearing cap with that on carrier and install bearing cap on carrier. And tighten bolts to specified torque.

Tightening torque:
9 to 10 kg-m (65 to 72 ft-lb)

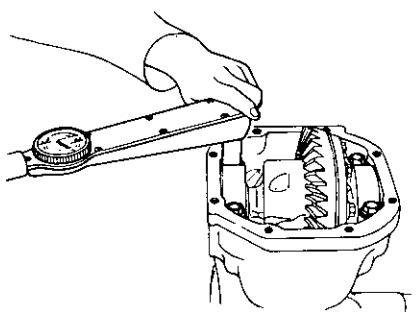

Fig. PD-32 Tightening side bearing cap

6. Measure ring gear-to-drive pinion backlash with a dial indicator and adjust it to 0.13 to 0.18 mm (0.0051 to 0.0071 in). See Figure PD-33.

If it is below the specified value, replace left washer with a thinner one and right washer with a thicker one. If it is over it, replace left washer with a thicker one and right washer with a thinner one.

Note: To maintain correct preload at all times, do not change total thickness of washers.

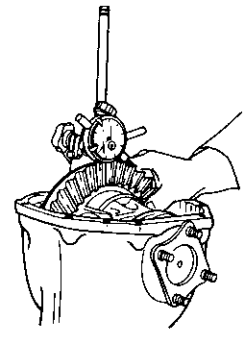

Fig. PD-33 Measuring the backlash of ring gear and pinion

Incidentally a decrease or increase in thickness of washers causes change in ring gear-to-pinion backlash.

Thus, check for proper backlash.

7. Check and adjust the tooth contact pattern of ring gear and drive pinion.

(1) Thoroughly clean ring and drive pinion gear teeth.

(2) Paint ring gear teeth lightly and evenly with a mixture of powdered red lead and oil of a suitable consistency to produce a contact pattern.

(3) Rotate pinion through several revolutions in the forward and reverse direction until a definite contact pattern is developed on ring gear.

(4) If contact pattern is incorrect, readjust thickness of adjusting washer.

Be sure to completely wipe off red lead upon completion of adjustment.

(5) Incorrect teeth contact pattern can be adjusted in the following manner.

Contact pattern

a. Heel contact

To correct, increase thickness of pinion height adjusting washer in order to bring drive pinion close to ring gear. See Figure PD-34.

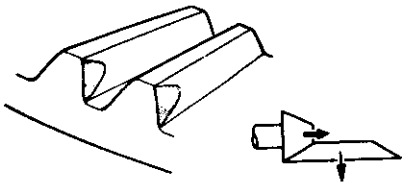

Fig. PD-34 Heel contact

b. Toe contact

To correct, reduce thickness of pinion height adjusting washer in order to make drive pinion move away from ring gear. See Figure PD-35.

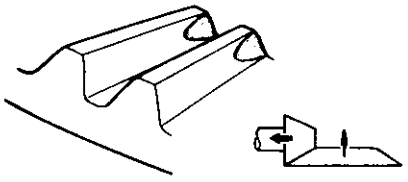

Fig. PD-35 Toe contact

c. Flank contact

Adjust in the same manner as in b. See Figure PD-36.

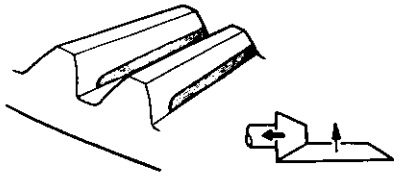

Fig. PD-36 Flank contact

d. Face contact

Adjust in the same manner as in a. See Figure PD-37.

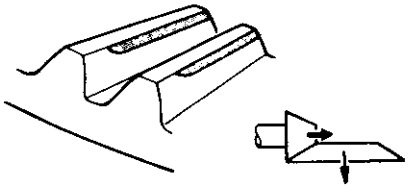

Fig. PD-37 Face contact

e. Correct tooth contact

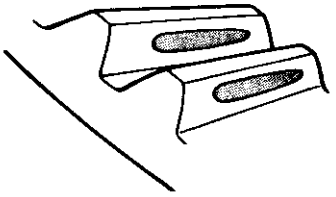

Fig. PD-38 Correct contact

Note: Change in thickness of adjusting washer is accompanied by change in backlash. Check it when installing gear.

8. Install rear cover.

Tightening torque:
1.6 to 2.4 kg-m
(12 to 17 ft-lb)

9. Apply grease to cavity at sealing lips of oil seal.

Press side oil seal into carrier with Gear Carrier Side Oil Seal Drift KV38100200.

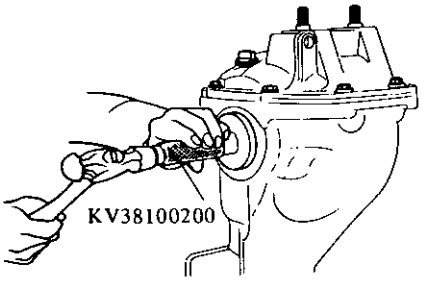

Fig. PD-39 Installing side oil seal

10. Install side flange on carrier. Engage spline in side flange with that in side gear and apply light hammer blows until side flange circlip is fitted into groove in side flange.

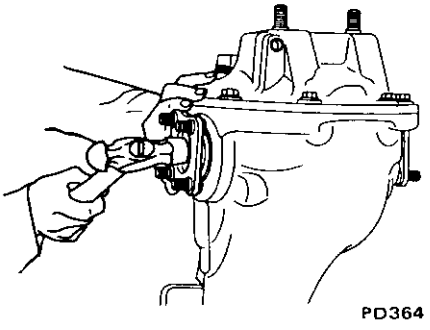

Fig. PD-40 Installing side flange

Notes:

a. **The length of side flanges differs for their locations. Install the shorter flange on the left side (ring gear) and the longer one on the right side.**

b. **Be careful not to scratch oil seal lips with side flange.**

INSTALLATION

Install in the reverse order of removal. Refer to Section RA for Installation.

Note: **Oil quantity: 1.3 liters (2 ¾ U.S. pt., 2 ¼ Imp. pt., use API GL-5).**

REPLACEMENT OF OIL SEALS

Replacement of oil seals with differential gear carrier assembly installed on the car.

FRONT OIL SEAL

Procedures are as follows:

1. Drain gear oil.
2. Raise the rear end of car and support it with safety stands.
3. Remove insulator, exhaust tube and main muffler mounting bolts to free them from car body.
4. Detach propeller shaft.
5. Remove bolts securing rear stabilizer to front mounting, and free stabilizer from car body.
6. Remove drive pinion nut, holding companion flange with Drive Pinion Flange Wrench ST31530000.
7. Extract companion flange with a suitable puller.
8. Remove oil seal with Gear Carrier Oil Seal Puller ST33290001.
9. Set new oil seal in position with Gear Carrier Front Oil Seal Drift KV38100500. Apply grease to cavity between seal lips.
10. Fit companion flange on drive pinion, and secure it in position by tightening nut to specified torque confirming the following preload, with Drive Pinion Flange Wrench ST31530000.

Tightening torque of pinion nut:
19 to 22 kg-m
(137 to 159 ft-lb)
Pinion bearing preload (with oil seal):
11 to 17 kg-cm
(9.5 to 15.0 in-lb)
At companion flange bolt hole:
3.1 to 4.9 kg
(6.8 to 10.8 lb)

11. Reinstall rear stabilizer, propeller shaft and muffler in reverse order of removal, and fill up gear oil.

SIDE OIL SEAL

Side oil seal is replaced as follows:

1. Disconnect drive shaft on the gear carrier side.
2. Drive side flange out with pry bar.

Note: Hold side bearing flange with hand to prevent it from jumping out of carrier.

3. Remove oil seal.
4. Set in new oil seal with Gear Carrier Side Oil Seal Drift KV38100200.

Note: Apply grease to cavity between oil seal lips.

5. Install side flange on carrier. Engage spline in side flange with that in side gear and apply light hammer blows until side flange circlip is fitted into groove in side flange.
6. Join drive shaft with side flange and tighten nuts to specified torque.

Tightening torque:
5.0 to 6.0 kg-m
(36 to 43 ft-lb)

Note: Be careful not to scratch oil seal lips with side flange.

SERVICE DATA AND SPECIFICATIONS

Type		R200	
Gear ratio (number of teeth)		3.545 (39/11)	
Drive pinion preload adjusted by		Washer	
Drive pinion			
Preload	kg-cm (in-lb)		
(without oil seal)		10 to 13 (8.7 to 11.3)	
(with oil seal)		11 to 17 (9.5 to 15.0)	
At companion flange bolt hole	kg (lb)		
(without oil seal)		2.9 to 3.7 (6.4 to 8.2)	
(with oil seal)		3.1 to 4.9 (6.8 to 10.8)	
Thickness of pinion height adjusting washer	mm (in)	3.09 (0.1217)	3.39 (0.1335)
		3.12 (0.1228)	3.42 (0.1346)
		3.15 (0.1240)	3.45 (0.1358)
		3.18 (0.1252)	3.48 (0.1370)
		3.21 (0.1264)	3.51 (0.1382)
		3.24 (0.1276)	3.54 (0.1394)
		3.27 (0.1287)	3.57 (0.1406)
		3.30 (0.1299)	3.60 (0.1417)
		3.33 (0.1311)	3.63 (0.1429)
		3.36 (0.1323)	3.66 (0.1441)
			0.05 (0.0020)
			0.07 (0.0028)
Length of pinion bearing adjusting spacer	mm (in)	55.10 (2.1693)	
		55.40 (2.1811)	
		55.70 (2.1929)	
		56.00 (2.2047)	
		56.25 (2.2146)	
Thickness of pinion bearing adjusting washer	mm (in)	3.80 to 3.82 (0.1496 to 0.1504)	
		3.82 to 3.84 (0.1504 to 0.1512)	
		3.84 to 3.86 (0.1512 to 0.1520)	
		3.86 to 3.88 (0.1520 to 0.1528)	
		3.88 to 3.90 (0.1528 to 0.1535)	
		3.90 to 3.92 (0.1535 to 0.1543)	
		3.92 to 3.94 (0.1543 to 0.1551)	
		3.94 to 3.96 (0.1551 to 0.1559)	
		3.96 to 3.98 (0.1559 to 0.1567)	
		3.98 to 4.00 (0.1567 to 0.1575)	
		4.00 to 4.02 (0.1575 to 0.1583)	
		4.02 to 4.04 (0.1583 to 0.1591)	
		4.04 to 4.06 (0.1591 to 0.5598)	
		4.06 to 4.08 (0.5598 to 0.1606)	
		4.08 to 4.10 (0.1606 to 0.1614)	

Side gear and pinion mate

Thickness of side gear thrust washer	mm (in)	0.75 to 0.80 (0.0295 to 0.0315) 0.80 to 0.85 (0.0315 to 0.0335) 0.85 to 0.90 (0.0335 to 0.0354)
Pinion mate-to-side gear backlash (or clearance between side gear and thrust washer)	mm (in)	0.1 to 0.2 (0.0039 to 0.0079)

Ring gear

Ring gear-to-drive pinion backlash	mm (in)	0.13 to 0.18 (0.0051 to 0.0071)
Thickness of side bearing adjusting washer	mm (in)	2.00 (0.0787) 2.05 (0.0807) 2.10 (0.0827) 2.15 (0.0846) 2.20 (0.0866) 2.25 (0.0886) 2.30 (0.0906) 2.35 (0.0925) 2.40 (0.0945) 2.45 (0.0965) 2.50 (0.0984) 2.55 (0.1004) 2.60 (0.1024)
Side bearing standard width	mm (in)	21.00 (0.8268)

Oil level (in normal curb weight condition)		at the lower edge of the filler plug
Oil capacity (about)	liter (U.S.pt., Imp.pt.)	1.3 (2 ¾, 2 ¼)

Adjusting methods

Variation numbers expressed by	mm (x 0.01)
Dummy shaft	Use
Drive pinion adjusting formula	$T = N - [(H - D') \times 0.01] + 3.00$
Side bearing adjusting formula	$T_1 = (A - C + D - H') \times 0.01 + E + 2.05$ $T_2 = (B - D + H') \times 0.01 + F + G + 1.95$

Tightening torque kg-m (ft-lb)

Drive pinion nut	19 to 22	(137 to 159)
Ring gear bolt [using Locktite (stud lock) or equivalent]	6 to 7	(43 to 51)
Side bearing cap bolt	9 to 10	(65 to 72)
Rear cover fixing bolt	1.6 to 2.4	(12 to 17)
Rear cover to rear mounting member lock nut	7.5 to 9.5	(54 to 69)
Differential carrier to front mounting Insulator fixing bolt	6 to 8	(43 to 58)
Companion flange to propeller shaft fixing bolt	4.0 to 4.5	(29 to 33)
Side flange to drive shaft fixing nut	5.0 to 6.0	(36 to 43)

TROUBLE DIAGNOSES AND CORRECTIONS

When gear carrier is suspected causing noise, it is advisable to make a thorough test to determine whether the noise originates in the tires, road surface, exhaust, universal joint, propeller shaft, wheel bearings, engine, transmission, or gear carrier. Noise which originates in other places cannot be corrected by adjustment or replacement of parts in the rear axle assembly.

Condition	Probable cause	Corrective action
Noise during driving and/or coasting	Shortage of oil.	Supply gear oil. Rebuild gear carrier if necessary.
	Incorrect tooth contact between ring gear and drive pinion.	Adjust tooth contact or replace the hypoid gear set.
	Incorrect backlash between ring gear and drive pinion.	Adjust backlash or replace the hypoid gear set if necessary.
	Seized or damaged ring gear and drive pinion.	Replace the hypoid gear set.
	Seized, damaged or broken drive pinion bearing.	Replace the pinion bearing and faulty parts.
	Seized, damaged or broken side bearing.	Replace the side bearing and faulty parts.
	Loose bolts or nuts fixing ring gear, side bearing caps, etc.	Tighten to specified torque, and replace faulty parts.
Noise on turns.	Seized, damaged or broken side and pinion gears.	Replace faulty parts.
	Seized, damaged or broken side gear and pinion thrust washer.	Replace faulty parts.
	Pinion gears too tight on their shaft.	Replace faulty parts.
	Interference between side flange and differential case.	Repair the part responsible for interference, or replace the side flange and differential case.
Knocking sound during starting or gear shifting	Excessive backlash.	
	Incorrect backlash of ring gear-to-drive pinion or side gear-to-pinion gear.	Adjust backlash.
	Worn gears or case.	Replace worn parts.
	Worn side flange and side gear spline.	Replace worn parts.
	Pinion bearing under preload.	Adjust preload.
	Loose drive pinion nut.	Repair or replace.
	Loose bolts or nuts fixing ring gear, side bearing caps, etc.	Tighten or replace if necessary.
Seizure or breakage.	Shortage of oil or use of unsuitable oil.	Replace faulty parts.
	Excessively small backlash.	Adjust backlash and replace as required.
	Incorrect adjustment of bearings or gears.	Replace faulty parts.
	Severe service due to excessive loading, improper use of clutch.	Replace faulty parts.
	Loose bolts and nuts, such as ring gear bolts.	Replace faulty parts.

Condition	Probable cause	Corrective action
Oil leakage.	Worn-out, damaged or improperly driven front oil seal, or bruised, dented or abnormally worn slide face of companion flange.	Replace the faulty oil seal. Ammend the affected flange with sandpaper or replace if necessary.
	Worn, damaged or improperly driven side oil seal, or bruised, dented or abnormally worn slide flange.	Treat as above.
	Loose rear cover bolts.	Tighten the bolts to specified torque.
	Worn rear cover gasket.	Replace the faulty gasket with new one.
	Loose filler or drain plug.	Tighten the plug.
	Clogged or damaged breather.	Repair or replace.

SPECIAL SERVICE TOOLS

No.	Tool number & tool name	Description Unit: mm (in)	For use on	Reference page or Figure No.
1.	ST06270002 Gear carrier attachment	This attachment is used with engine stand (ST0501S000). Strut and steering gear box mounting holes are provided with engraved identification marks. "D" for gear carrier "S" for strut "G" for steering gear box 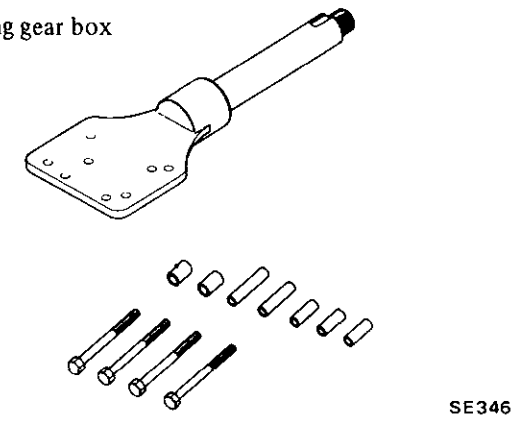 	S30 710(SSS) 610 KC130 GC110	Fig. PD-3
2.	ST23550001 Solid punch	This tool is used to drive out lock pin of pinion mate shaft. 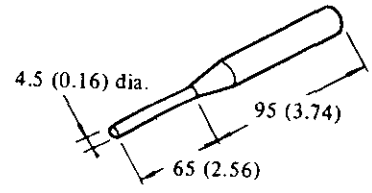 	S30 710 610(All) C110 (All) C130 KC130 230 B120 620	Page PD-6
3.	Drive pinion outer race drift set ① ST30611000 Bar	These tools are used when assembling drive pinion bearing outer race. ① 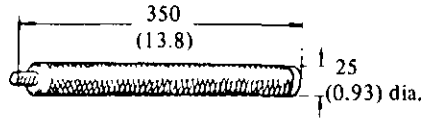 		Page PD-8
	② ST30613000 Adapter (front)	② 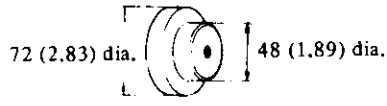 	RS30 C130 230	
	③ ST30621000 Adapter (rear)	③ 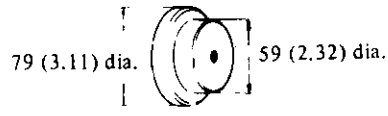 	S30 GC110 C130 KC130 230	

No.	Tool number & tool name	Description Unit: mm (in)	For use on	Reference page or Figure No.
4.	ST3090S000 Drive pinion rear bearing inner race puller set ① ST30031000 Puller ② ST30901000 Base	This assembly clamps rear bearing inner race and pulls it out by a hydraulic press. Before insertion, place another drift facing inner race, and then press-fit. 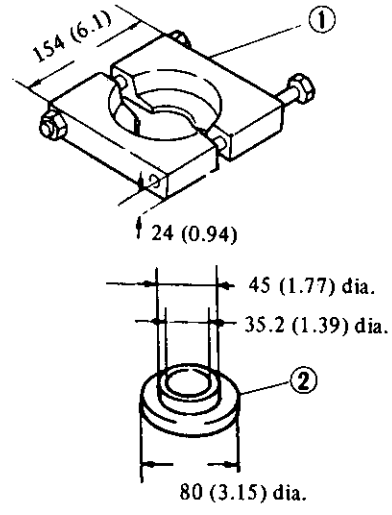 	S30 GC110 C130 KC130 230 B120 T20 E20	Fig. PD-14 Fig. PD-26
5.	ST3127S000 Preload gauge ① GG91030000 Torque wrench ② HT62940000 Socket adapter ③ HT62900000 Socket adapter	This tool is used to measure pinion bearing preload. 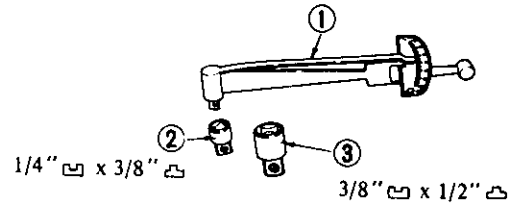 	All models	Fig. PD-5 Fig. PD-22
6.	ST31520000 Drive pinion flange wrench	This tool is used to hold the flange to ease the operation of tightening and loosening drive pinion nut. 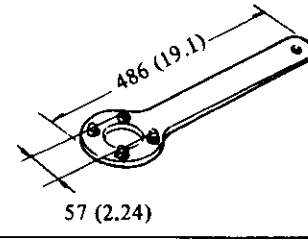 	S30	Fig. PD-10
7.	ST3306S001 Diff. side bearing puller set ① ST33051001 Body ② ST33061000 Adapter	This tool is used to pull out side bearing. 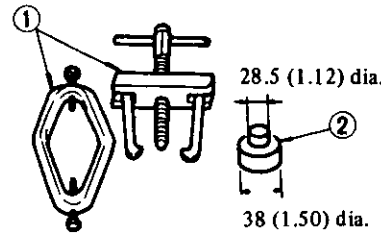 	S30 710(SSS) 610 V610 GC110 C130 KC130 230 620	Fig. PD-16 Fig. PD-20

No.	Tool number & tool name	Description Unit: mm (in)	For use on	Reference page or Figure No.
8.	ST33290001 Gear carrier oil seal puller	This tool is used to pull out oil seal from gear carrier. This tool also enables removal of side bearing outer race from retainer without damaging it. (models R160 and R180 only) 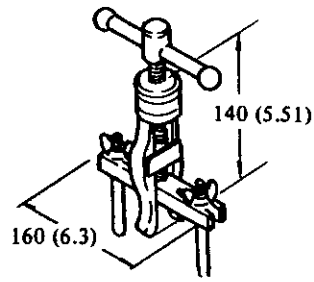 	All models	Fig. PD-12
9.	KV381001S0 Drive pinion setting-gauge set ① KV38100110 Dummy shaft ② KV38100120 Height gauge ③ KV38100130 Collar ④ KV38100140 Stopper	These tools are used to adjust the pinion height. 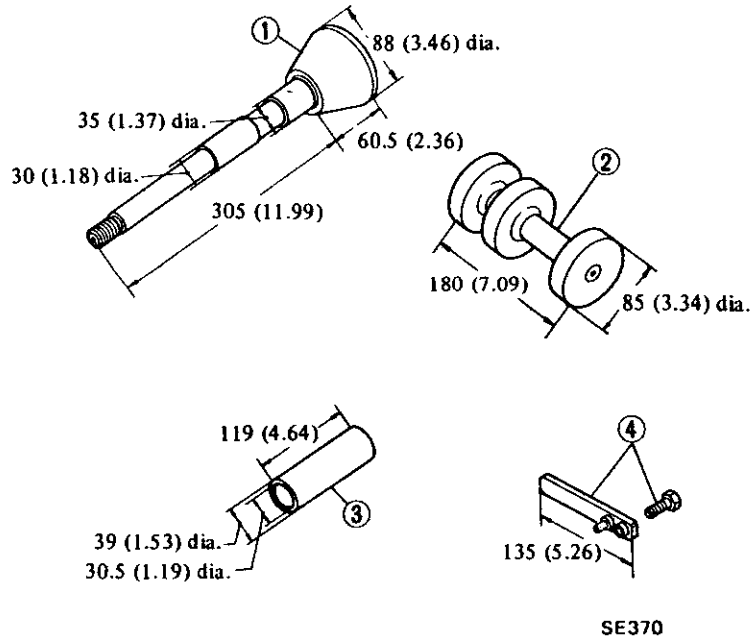 	S30	Page PD-8 Fig. PD-21 Fig. PD-23 Fig. PD-24
10.	KV38100200 Gear carrier side oil seal drift	This tool is used when driving in side oil seal. Using this drift completely eliminates the possibility of damaging oil seal. 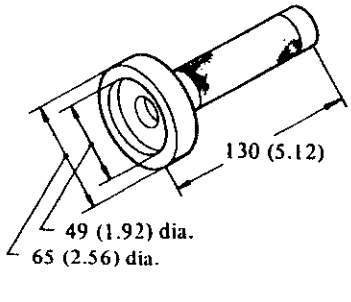 	S30	Fig. PD-39

No.	Tool number & tool name	Description Unit: mm (in)	For use on	Reference page or Figure No.
11.	KV38100300 Diff. side bearing drift	Use of this tool makes it possible to drive in bearing without damaging it. 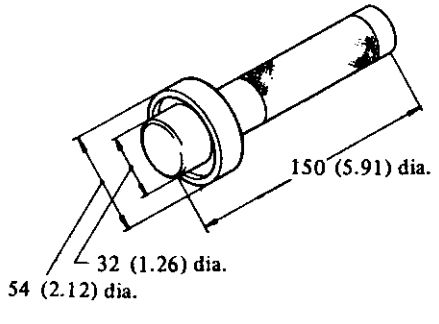 	S30	Fig. PD-20
12.	KV38100401 Pilot bearing drift	This tool is used to pull out front pilot bearing. After drive pinion has been pulled, insert this tool from behind the gear carrier case, and apply it onto pinion front bearing inner race. Then press out pinion front bearing inner race, front pilot bearing spacer and pilot bearing. 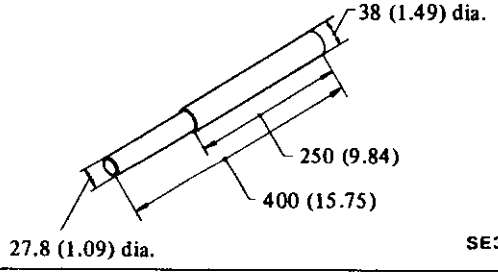 	S30	Fig. PD-13
13.	KV38100500 Gear carrier front oil seal drift	This tool is used to drive in front oil seal without damaging it. 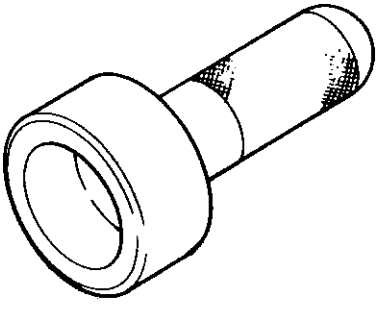 	S30	Page PD-10
14.	KV38100600 Side bearing spacer drift	This tool is used to drive in side bearing spacer without damaging it. 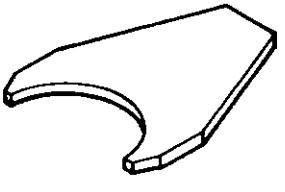 	S30	Fig. PD-31

No.	Tool number & tool name	Description Unit: mm (in)	For use on	Reference page or Figure No.
15.	HT72400000 Slide hammer	This tool is used to lift out differential case assembly. 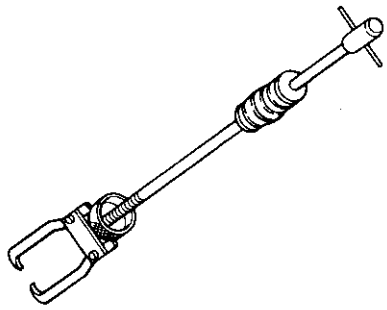 SE384	All models	Fig. PD-9

509 Debby Lane
Adamsville, AL 35005
http://www.zcarcreations.com
cborden@zcarcreations.com

NISSAN FACTORY SERVICE MANUAL CDROM END-USER LICENSE AGREEMENT

NOTICE TO USER: THIS IS A CONTRACT. BY PURCHASING AND USING THE SERVICE MANUAL ON CDROM, YOU ACCEPT ALL THE TERMS AND CONDITIONS OF THIS AGREEMENT.

This End User License Agreement accompanies the Service Manual on CDROM product and related explanatory materials. Please read this Agreement carefully. By purchasing and using the Service Manual on CDROM, you are implying that you have carefully read, agree with, and will adhere to the conditions set forth in this agreement. If you do not wish to accept the terms of this End User Agreement please do not use the Service Manual on CDROM. You will not be permitted to use the Service Manual on CDROM without consenting to this end user agreement.

Upon your acceptance of this Agreement, Z Car Creations, LLC grants to you a nonexclusive license to use the Service Manual on CDROM, provided that you agree to the following:

USE OF SOFTWARE

You may install the contents of the CD on a hard disk or other storage device for personal use only. Each Service Manual on CDROM comes with a single user license. Under no circumstances should the contents of the Service Manual CDROM be placed on a server for purposes of distributing or allowing access to the material over a network.

COPYRIGHT AND TRADEMARK RIGHTS

The Service Manual CDROM is owned by Z Car Creations, LLC and its structure and organization, all graphics and coding are considered intellectual property of Z Car Creations, LLC. The manual content itself is property of Nissan Motors. The Service Manual on CDROM is also protected by United States Copyright Law and International Treaty provisions. This Agreement does not grant you any intellectual property or resale rights to the Service Manual CDROM.

RESTRICTIONS

You agree not to modify, adapt, translate, reverse engineer, decompile or disassemble the PDF file on the Service Manual CDROM. The Service Manual on CDROM is licensed and distributed by Z Car Creations, LLC for single user utilization of its contents only. Licensed users will be permitted to use the contents of the Service Manual CDROM for multimedia presentation to an audience from a single machine using a large display or projection device but the Service Manual CDROM may not otherwise be distributed, sold to or made accessible to multiple users.

NO WARRANTY

The software is being delivered to you AS IS and Z Car Creations, LLC makes no warranty as to its use or performance. Z CAR CREATIONS, LLC DOES NOT AND CANNOT WARRANT THE PERFORMANCE OR RESULTS YOU MAY OBTAIN BY USING THE SERVICE MANUAL CDROM OR DOCUMENTATION, NOR MAKES ANY WARRANTIES, EXPRESS OR IMPLIED, AS TO NONINFRINGEMENT OF THIRD-PARTY RIGHTS, MERCHANTABILITY, OR FITNESS FOR ANY PARTICULAR PURPOSE. IN NO EVENT WILL Z CAR CREATIONS, LLC BE LIABLE TO YOU FOR ANY CONSEQUENTIAL, INCIDENTAL, OR SPECIAL DAMAGES FOR ANY REASON.

509 Debby Lane
Adamsville, AL 35005
http://www.zcarcreations.com
cborden@zcarcreations.com

GOVERNING LAW AND GENERAL PROVISIONS

This Agreement will be governed by the laws of the State of Alabama, USA, excluding the application of its conflicts of law rules. This Agreement will not be governed by the United Nations Convention on Contracts for the International Sale of Goods, the application of which is expressly excluded. If any part of this Agreement is found void and unenforceable, it will not affect the validity of the balance of the Agreement, which shall remain valid and enforceable according to its terms. You agree that the Service Manual on CDROM will not be shipped, transferred or exported into any country or used in any manner prohibited by the United States Export Administration act or any other export laws, restrictions or regulations. This Agreement shall automatically terminate upon failure by you to comply with its terms. This Agreement may only be modified in writing signed by and authorized officer for Z Car Creations, LLC.

Craig Borden
Z Car Creations, LLC
509 Debby Lane
Adamsville, AL 35005
USA

YOUR ACCEPTANCE OF THE FOREGOING AGREEMENT IS IMPLIED UPON PURCHASING AND USING THE SERVICE MANUAL CDROM.