BRAKE SYSTEM

SECTION BR

GI
MA
EM
LC
EC
FE
AT
AX
SU
BR
ST
RS
BT
HA
SC
EL
IDX

CONTENTS

CONTENTS (Cont'd)

Supplemental Restraint System (SRS) "AIR BAG"

NDBR0001

The Supplemental Restraint System "AIR BAG", used along with a seat belt, helps to reduce the risk or severity of injury to the driver and front passenger in a frontal collision. The Supplemental Restraint System consists of air bag modules (located in the center of the steering wheel and on the instrument panel on the passenger side), a diagnosis sensor unit, warning lamp, wiring harness and spiral cable. Information necessary to service the system safely is included in the **RS section** of this Service Manual.

WARNING:

- **To avoid rendering the SRS inoperative, which could increase the risk of personal injury or death in the event of a collision which would result in air bag inflation, all maintenance should be performed by an authorized NISSAN dealer.**
- **Improper maintenance, including incorrect removal and installation of the SRS, can lead to personal injury caused by unintentional activation of the system.**
- **Do not use electrical test equipment on any circuit related to the SRS unless instructed to in this Service Manual. SRS wiring harnesses are covered with yellow insulation either just before the harness connectors or for the complete harness, for easy identification.**

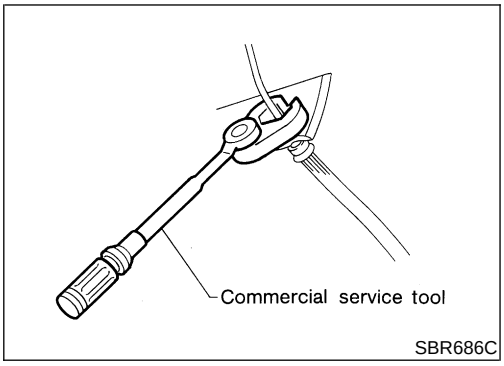

Precautions for Brake System

NDBR0002

- **Use brake fluid "DOT 3".**
- **Never reuse drained brake fluid.**
- **Be careful not to splash brake fluid on painted areas; it may cause paint damage. If brake fluid is splashed on painted areas, wash it away with water immediately.**
- **To clean master cylinder parts, disc brake caliper parts or wheel cylinder parts, use clean brake fluid.**
- **Never use mineral oils such as gasoline or kerosene. They will ruin rubber parts of the hydraulic system.**
- **Use flare nut wrench when removing and installing brake tubes.**
- **Always torque brake lines when installing.**
- **Burnish the brake contact surfaces after refinishing or replacing drums or rotors, after replacing pads or linings, or if a soft pedal occurs at very low mileage. Refer to "Brake Burnishing Procedure", "ON-VEHICLE SERVICE", BR-7.**

WARNING:

- **Clean brakes with a vacuum dust collector to minimize the hazard of airborne materials or other materials.**

Wiring Diagrams and Trouble Diagnosis

NDBR0003

When you read wiring diagrams, refer to the following:

- "HOW TO READ WIRING DIAGRAMS", ***GI-10***
- "POWER SUPPLY ROUTING",***EL-12*** for power distribution circuit

When you perform trouble diagnosis, refer to the following:

- "HOW TO FOLLOW TEST GROUP IN TROUBLE DIAGNOSIS", ***GI-34***
- "HOW TO PERFORM EFFICIENT DIAGNOSIS FOR AN ELECTRICAL INCIDENT", ***GI-23***

Commercial Service Tools

NDBR0004

Tool name	Description	
1 Flare nut crowfoot 2 Torque wrench	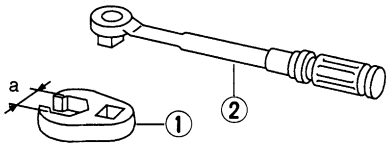 NT360	Removing and installing brake tubes **a: 10 mm (0.39 in)**
Brake fluid pressure gauge	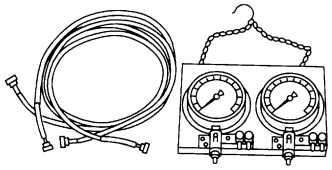 NT151	Measuring brake fluid pressure

NVH Troubleshooting Chart

NDBR0005S01

Use the chart below to help you find the cause of the symptom. If necessary, repair or replace these parts.

		Reference page	BR-22, BR-27	BR-22, BR-27	BR-25	—	—	BR-24, BR-27	—	—	—	BR-24	BR-27	"Noise, Vibration and Harshness (NVH) Troubleshooting", ***AX-3***	"Noise, Vibration and Harshness (NVH) Troubleshooting", ***AX-3***	"Noise, Vibration and Harshness (NVH) Troubleshooting", ***SU-3***	"Noise, Vibration and Harshness (NVH) Troubleshooting", ***SU-3***	"Noise, Vibration and Harshness (NVH) Troubleshooting", ***SU-3***	"Noise, Vibration and Harshness (NVH) Troubleshooting", ***ST-5***
Possible cause and SUSPECTED PARTS			Linings or pads - damaged	Linings or pads - uneven wear	Return spring damaged	Rotor or drum imbalance	Rotor or drum damage	Rotor or drum runout	Rotor or drum deformation	Rotor or drum deflection	Rotor or drum rust	Rotor thickness variation	Drum out of round	DRIVE SHAFT	AXLE	SUSPENSION	TIRES	ROAD WHEEL	STEERING
Symptom	BRAKE	Noise	×	×	×									×	×	×	×	×	×
		Shake				×								×	×	×	×	×	×
		Shimmy, Judder				×	×	×	×	×	×	×	×		×	×	×	×	×

×: Applicable

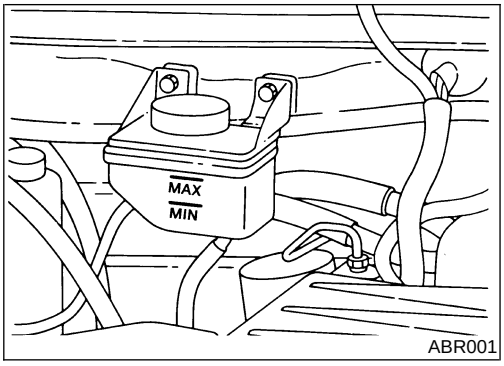

ABR001

Checking Brake Fluid Level

NDBR0006

- Check fluid level in reservoir tank. It should be between MAX and MIN lines on reservoir tank.
- If fluid level is extremely low, check brake system for leaks.
- If the brake warning lamp comes on, check brake fluid level switch and parking brake switch.

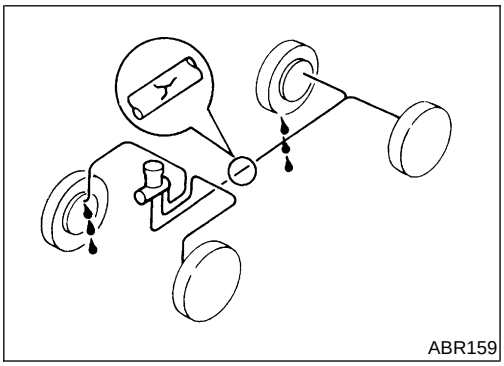
ABR159

Checking Brake Line

NDBR0007

CAUTION:

If leakage occurs around joints, retighten or, if necessary, replace damaged parts.

1. Check brake lines (tubes and hoses) for cracks, deterioration or other damage. Replace any damaged parts.
2. Check for oil leakage by fully depressing brake pedal while engine is running.

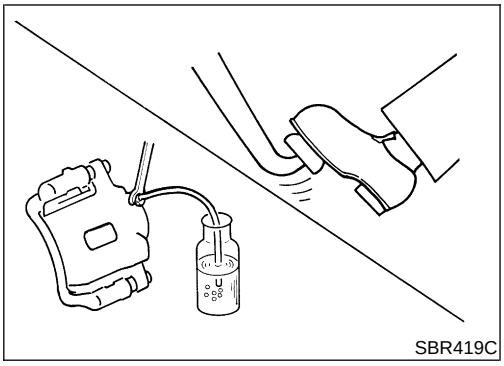
SBR419C

Changing Brake Fluid

NDBR0008

CAUTION:

- **Refill with new brake fluid “DOT 3”.**
- **Always keep fluid level higher than minimum line on reservoir tank.**
- **Never reuse drained brake fluid.**
- **Be careful not to splash brake fluid on painted areas; it may cause paint damage. If brake fluid is splashed on painted areas, wash it away with water immediately.**

1. Clean inside of reservoir tank, and refill with new brake fluid.
2. Connect a vinyl tube to each air bleeder valve.
3. Drain brake fluid from each air bleeder valve by depressing brake pedal.
4. Refill until new brake fluid comes out of each air bleeder valve. Use same procedure as in bleeding hydraulic system to refill brake fluid.
   Refer to “Bleeding Brake System”, BR-7.

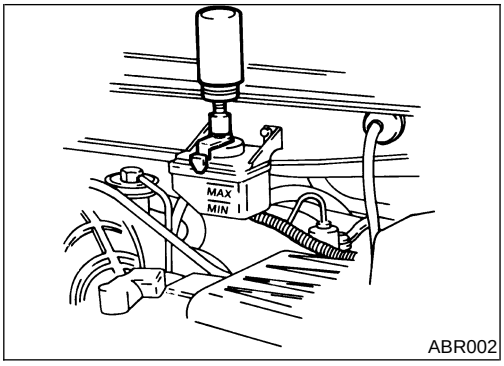

ABR002

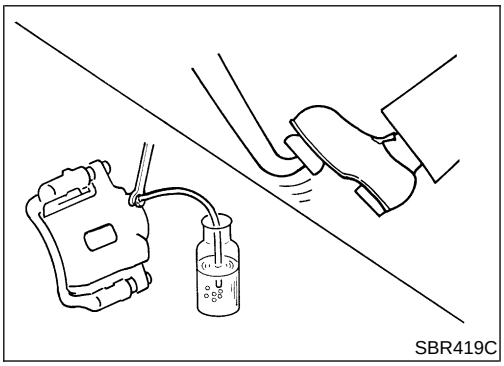
SBR419C

Bleeding Brake System

NDBR0009

CAUTION:

- **Carefully monitor brake fluid level at master cylinder during bleeding operation.**
- **Fill reservoir with new brake fluid "DOT 3". Make sure it is full at all times while bleeding air out of system.**
- **Place a container under master cylinder to avoid spillage of brake fluid.**
- **Turn ignition switch OFF and disconnect ABS actuator and electric unit connector or battery cable.**
- Bleed air in the following order:
  Left front brake→Right front brake→Left rear brake→Right rear brake.
  Turn ignition OFF and disconnect battery positive terminal.

1. Connect a transparent vinyl tube to air bleeder valve.
2. Fully depress brake pedal several times.
3. With brake pedal depressed, open air bleeder valve to release air.
4. Close air bleeder valve.
5. Release brake pedal slowly.
6. Repeat steps 2 through 5 until clear brake fluid comes out of air bleeder valve.
7. Tighten air bleeder valve.

   Front disc brake

   : 17 - 24 N·m (1.7 - 2.4 kg-m, 12 - 17 ft-lb)

   Rear drum brake

   : 12 - 18 N·m (1.2- 1.8 kg-m, 8.9 - 13.3 ft-lb)

Brake Burnishing Procedure

NDBR0084

Burnish the brake contact surfaces according to the following procedure after refinishing or replacing drums or rotors, after replacing pads or linings, or if a soft pedal occurs at very low mileage.

CAUTION:

Only perform this procedure under safe road and traffic conditions. Use extreme caution.

1. Drive the vehicle on a straight smooth road at 50 km/h (31 MPH).
2. Use medium brake pedal/foot effort to bring the vehicle to a complete stop from 50 km/h (31 MPH). Adjust brake pedal/foot pressure such that vehicle stopping time equals 3 to 5 seconds.
3. To cool the brake system, drive the vehicle at 50 km/h (31 MPH) for 1 minute without stopping.
4. Repeat steps 1 to 3, 10 times or more to complete the burnishing procedure.

Hydraulic Circuit

NDBR0010

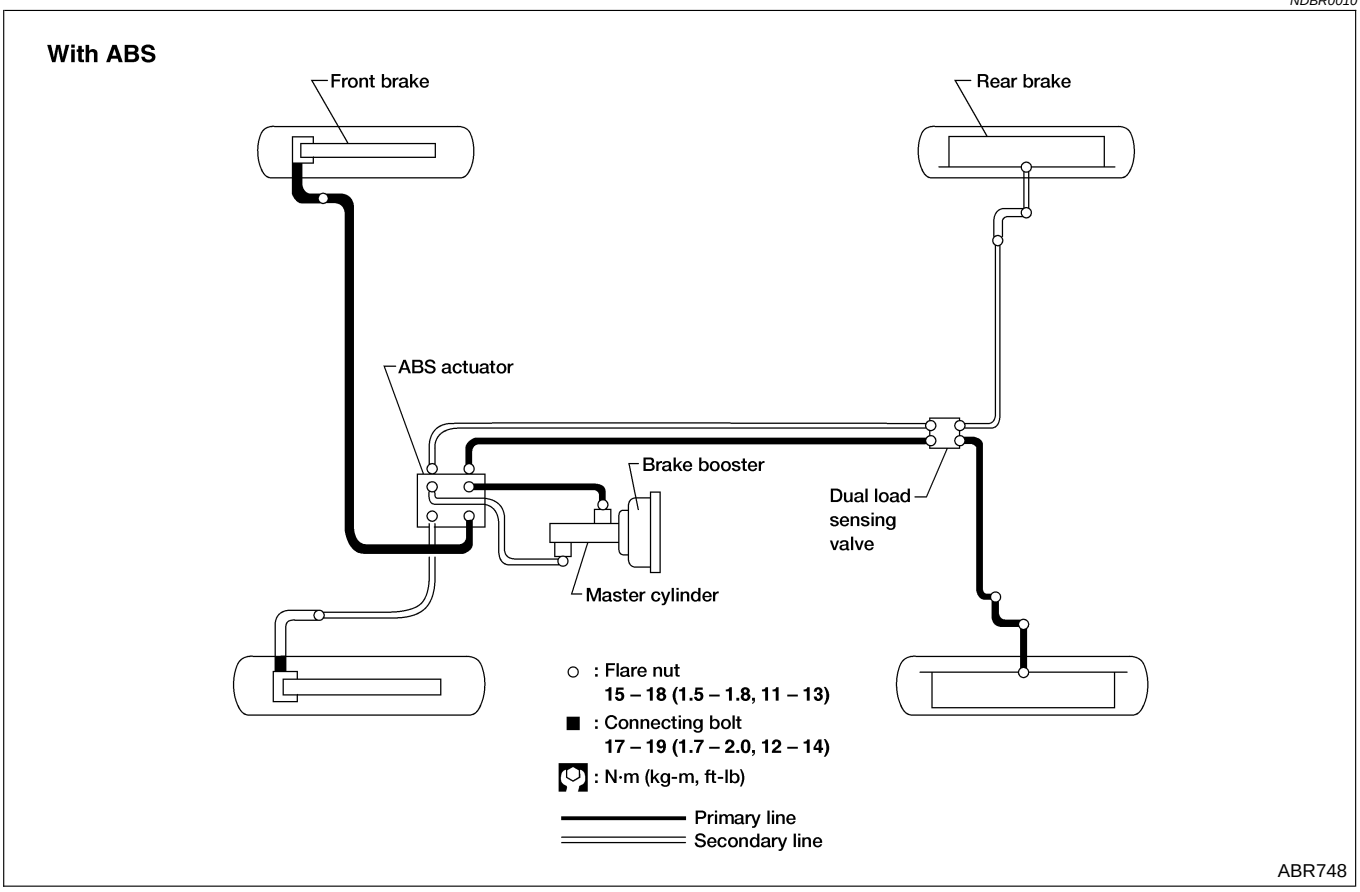

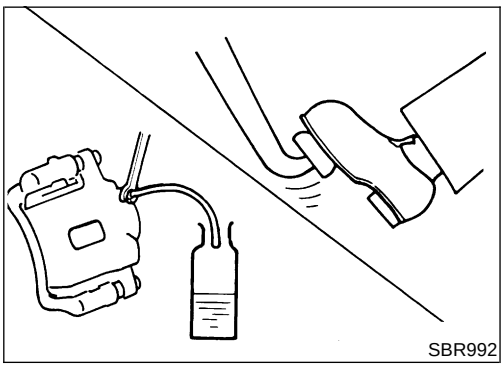

Removal

NDBR0011

CAUTION:

- **Be careful not to splash brake fluid on painted areas; it may cause paint damage. If brake fluid is splashed on painted areas, wash it away with water immediately.**
- **All hoses must be free from excessive bending, twisting and pulling.**

1. Connect a vinyl tube to air bleeder valve.
2. Drain brake fluid from each air bleeder valve by depressing brake pedal.
3. Remove flare nut securing brake tube to hose, then withdraw lock spring.
4. Cover openings to prevent entrance of dirt when disconnecting hydraulic line.

Inspection

NDBR0012

Check brake lines (tubes and hoses) for cracks, deterioration or other damage. Replace any damaged parts.

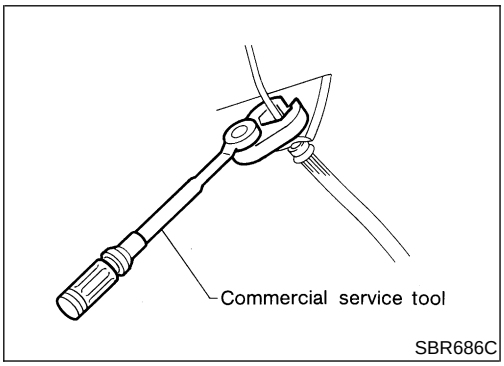

Installation

NDBR0013

CAUTION:

- **Refill with new brake fluid "DOT 3".**
- **Never reuse drained brake fluid.**

1. Tighten all flare nuts and connecting bolts.

   Flare nut:

   : 15 - 18 N·m (1.5 - 1.8 kg-m, 11 - 13 ft-lb)

   Connecting bolt:

   : 17 - 20 N·m (1.7 - 2.0 kg-m, 12 - 14 ft-lb)
2. Refill until new brake fluid comes out of each air bleeder valve.
3. Bleed air. Refer to "Bleeding Brake System", BR-7.

Inspection

NDBR0014

CAUTION:

- **Carefully monitor brake fluid level at master cylinder.**
- **Use new brake fluid "DOT 3".**
- **Be careful not to splash brake fluid on painted areas; it may cause paint damage. If brake fluid is splashed on painted areas, wash it away with water immediately.**
- **Depress pedal slowly when raising front brake pressure.**
- **Check rear brake pressure 2 seconds after front brake pressure reaches specified value.**
- **Disconnect harness connector from ABS actuator relay before checking.**

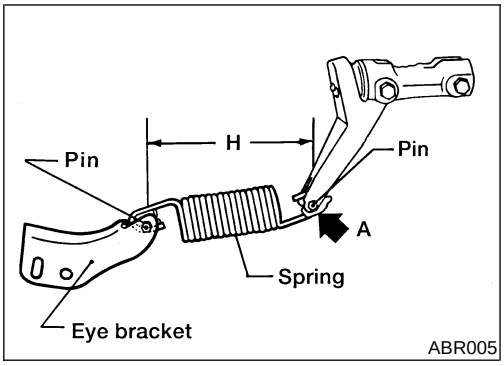

1. Check length "H" in unladen* condition.
   *: Fuel, radiator coolant and engine oil full. Spare tire, jack, hand tools and mats in designated positions.

a. Have one person sit on the rear end. Then have the person slowly get off the vehicle. This is necessary to stabilize suspension deflection.

b. Measure length "H".

   Length "H":

   Approx. 160.3 ± 1.5 mm (6.311 ± 0.059 in)

- Adjust spring length by moving eye bracket while pushing lever toward **A**.

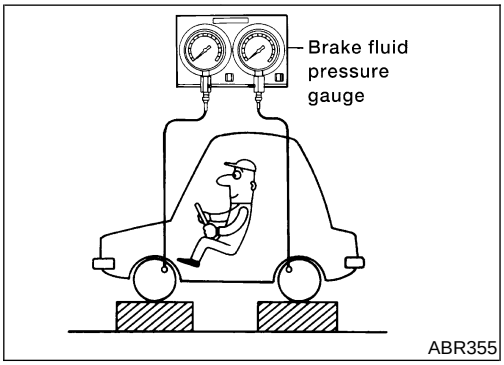

2. Connect tool to air bleeders of front and rear brakes on either LH or RH side.

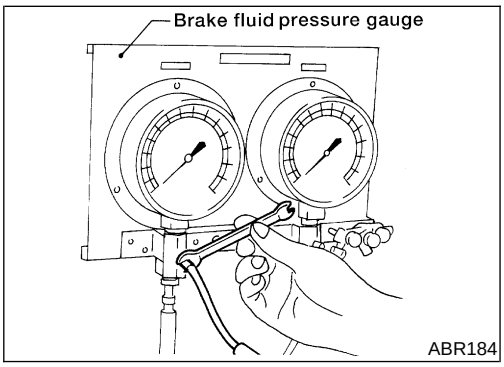

3. Bleed air from Tool.

4. With one person aboard, depress brake pedal until front brake fluid pressure reaches **5,884 kPa (60 kg/cm^2 , 853 psi)**. Hold brake pedal in that position and read rear brake fluid pressure on pressure gauge indicator.

   Rear brake pressure:

   3,295 - 5,688 kPa (33.6 - 58.0 kg/cm^2, 478 - 825 psi)

5. Depress brake pedal until front brake fluid pressure reaches **11,768 kPa (120 kg/cm^2, 1,706 psi)**. With brake pedal held in that position, read rear brake fluid pressure on pressure gauge indicator.

   Rear brake pressure:

   5,610 - 7,336 kPa (57.2 - 74.8 kg/cm^2, 813 - 1,064 psi)

6. If rear brake pressure is not within specifications, replace load sensing valve with a new one. After replacement, check load sensing valve by following steps 1 through 6.

Removal and Installation

=NDBR0015

CAUTION:

- **Refill with new brake fluid “DOT 3”.**
- **Be careful not to splash brake fluid on painted areas; it may cause paint damage. If brake fluid is splashed on painted areas, wash it away with water immediately.**

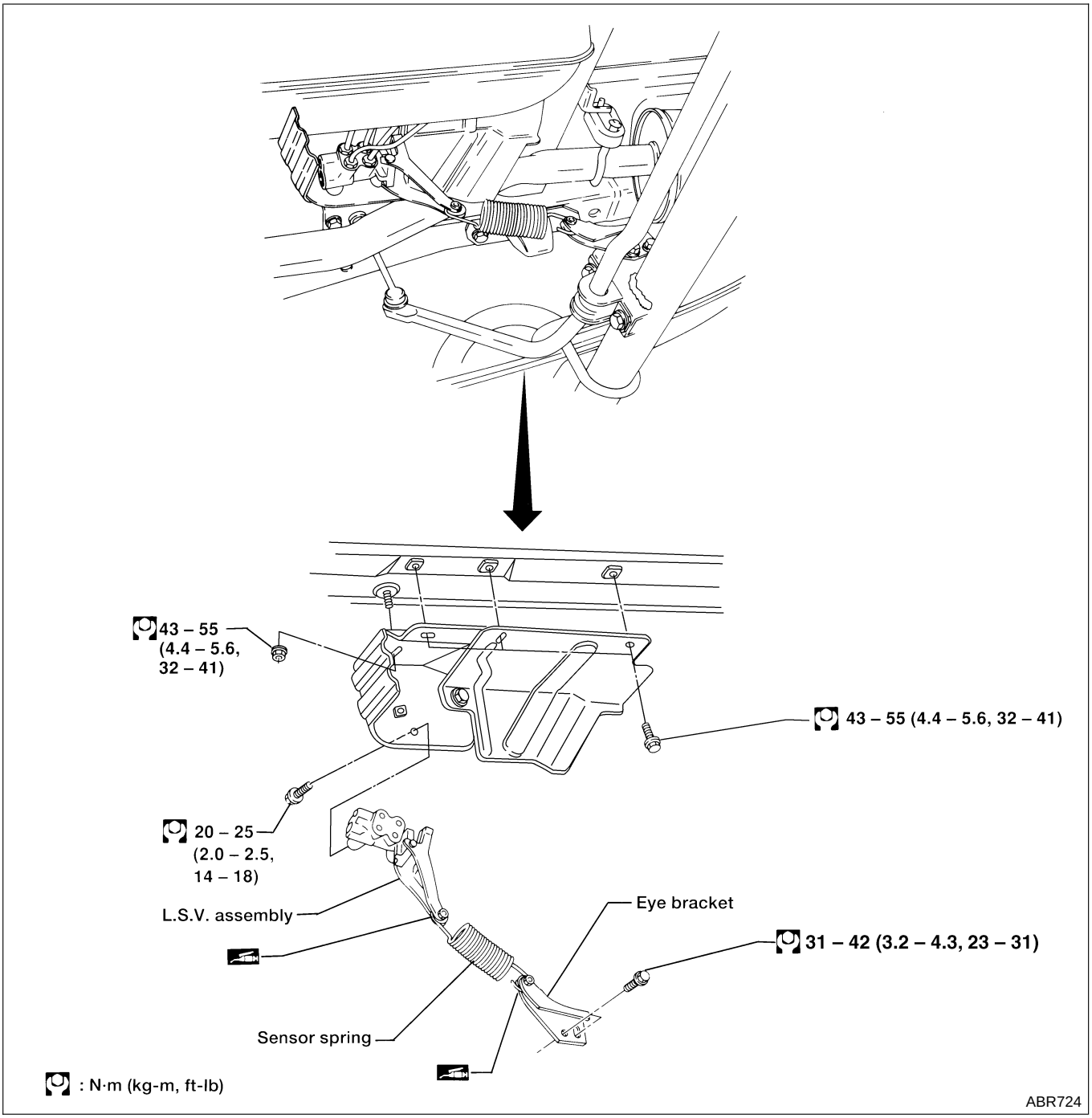

- Replace damaged Dual Load Sensing Valve as an assembly.
- Tighten all flare nuts.

  : 15 - 18 N·m (1.5 - 1.8 kg-m, 11 - 13 ft-lb)
- Bleed air. Refer to “Bleeding Brake System”, BR-7.

Removal and Installation

NDBR0016

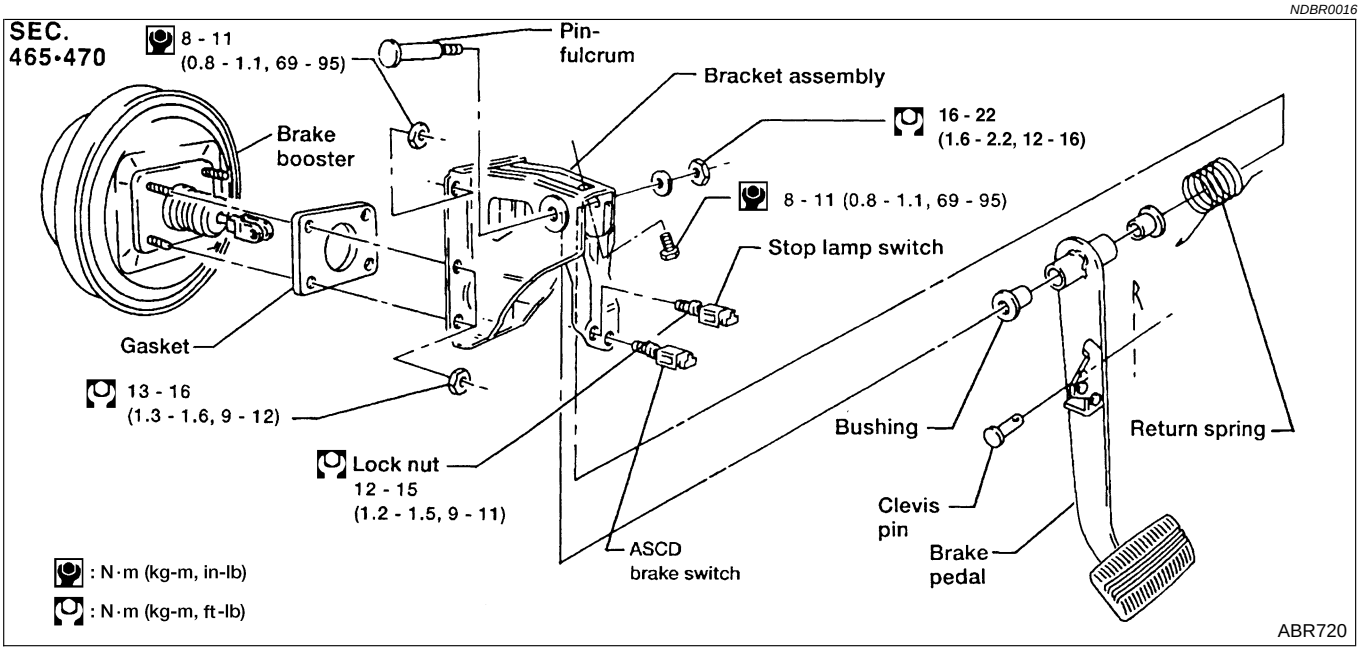

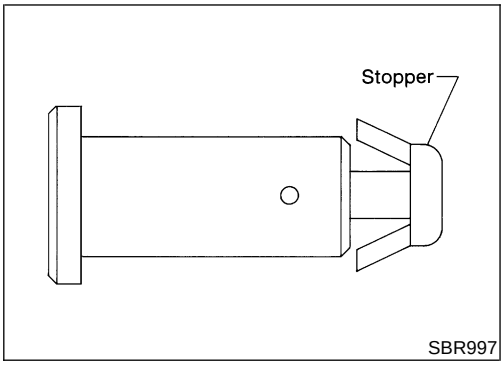

Inspection

NDBR0017

Check brake pedal for following items.

- Brake pedal bend
- Clevis pin deformation
- Crack of any welded portion
- Crack or deformation of clevis pin stopper

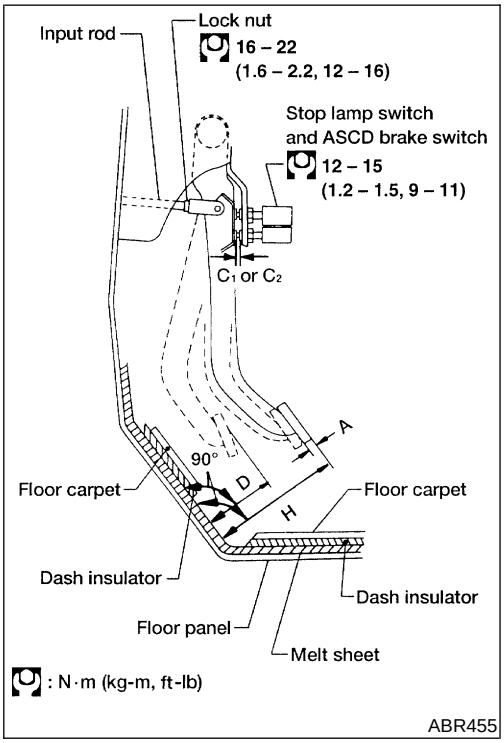

Adjustment

NDBR0018

Check brake pedal free height from melt sheet. Adjust if necessary.

H: Free height
195 - 205 mm (7.68 - 8.07 in)

D: Depressed height
115 - 130 mm (4.53 - 5.12 in)
Under force of 490 N (50 kg, 110 lb) with engine running

C_1, C_2: Clearance between pedal stopper and threaded end of stop lamp switch and ASCD brake switch
0.3 - 1.0 mm (0.012 - 0.039 in)

A: Pedal free play
1.0 - 3.0 mm (0.039 - 0.118 in)

Adjustment (Cont'd)

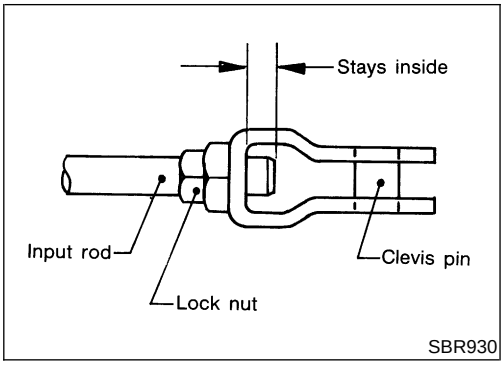

1. Loosen lock nut and adjust pedal free height by turning brake booster input rod. Then tighten lock nut.

Make sure that tip of input rod stays inside.

2. Loosen lock nut and adjust clearance "C_1" and "C_2" with stop lamp switch and ASCD brake switch (or A/T shift lock switch) respectively. Then tighten lock nuts.
3. Check pedal free play.

Make sure that stop lamps go off when pedal is released.

4. Check brake pedal's depressed height while engine is running. If lower than specification, check for leaks, air in system, or damage to components (master cylinder, wheel cylinder, etc.). Then make necessary repairs.

Removal

NDBR0019

CAUTION:

- **Be careful not to splash brake fluid on painted areas; it may cause paint damage. If brake fluid is splashed on painted areas, wash it away with water immediately.**
- **In the case of brake fluid leakage from the master cylinder, disassemble the cylinder. Then check piston cups for deformation or scratches and replace necessary parts.**

1. Connect a vinyl tube to air bleeder valve.
2. Drain brake fluid from each air bleeder valve, depressing brake pedal to empty fluid from master cylinder.
3. Remove brake pipe flare nuts.
4. Remove master cylinder mounting nuts.

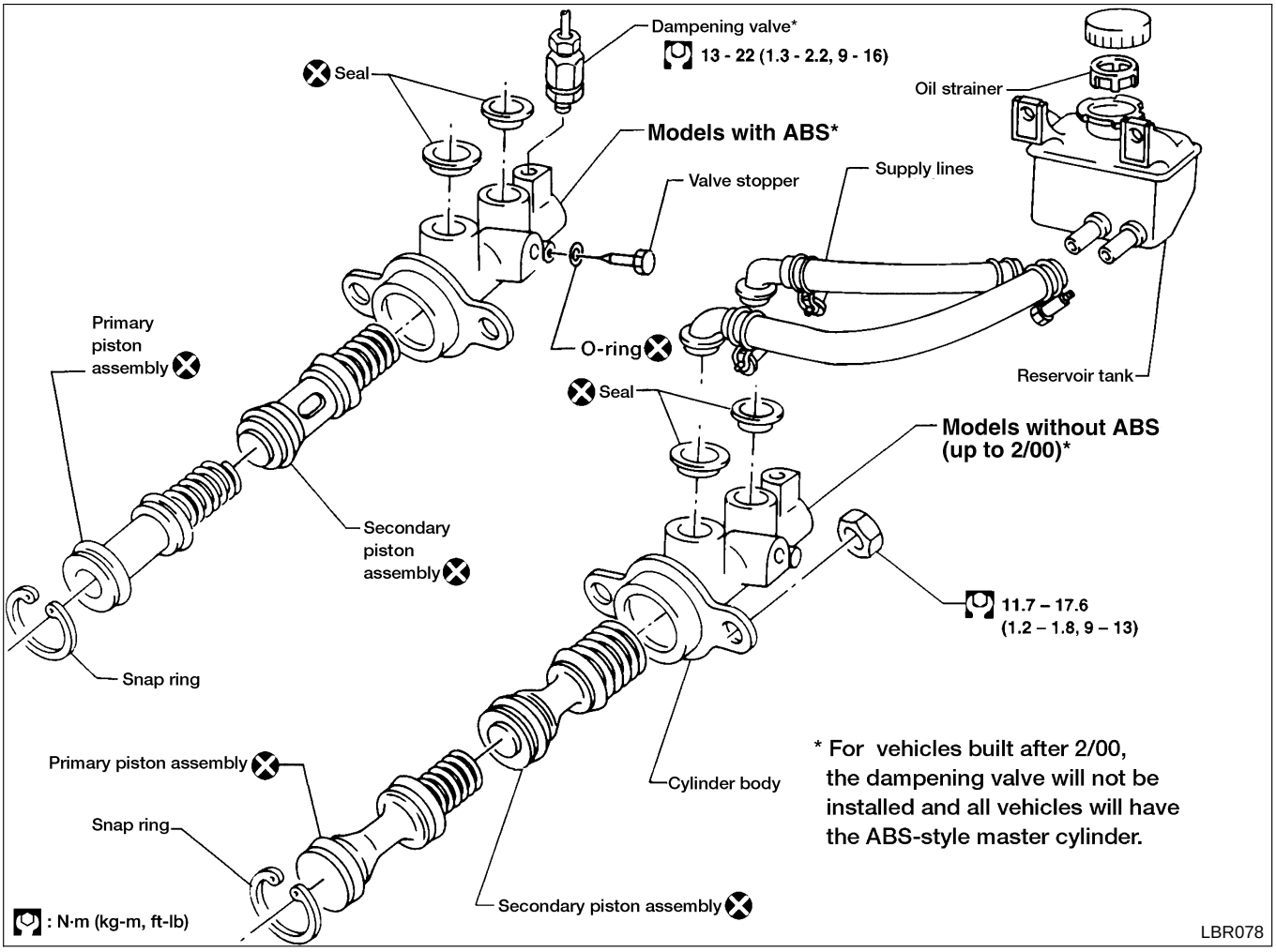

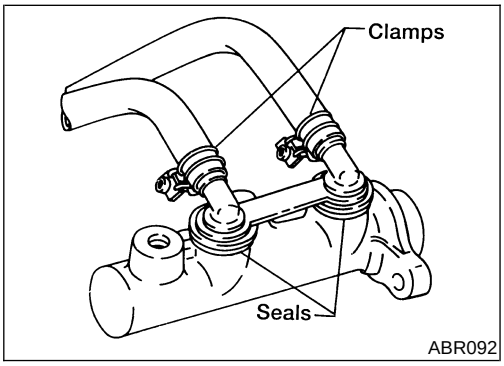

Disassembly

NDBR0020

1. Remove rubber seals.
2. Remove clamps to supply lines.

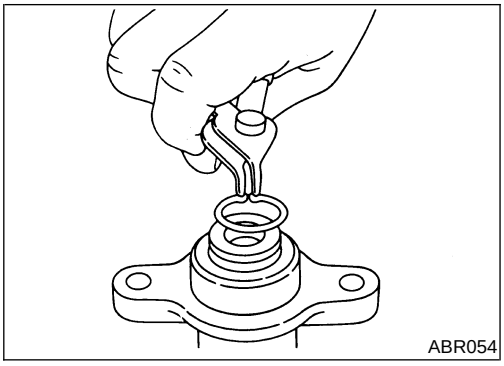

3. Remove snap ring.

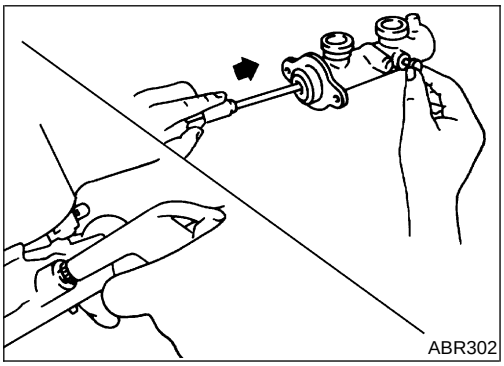

4. Remove valve stopper while piston is pushed into cylinder.
5. Remove piston assemblies.

If it is difficult to remove secondary piston assembly, gradually apply compressed air through fluid outlet.

Inspection

NDBR0021

Check master cylinder inner wall for pin holes or scratches. Replace if damaged.

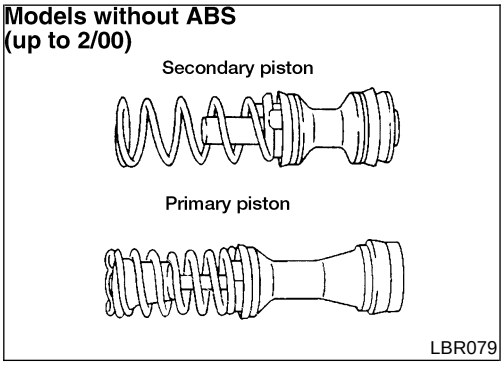

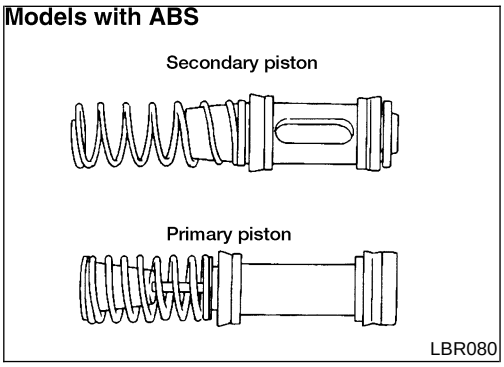

Assembly

NDBR0022

1. Insert secondary piston assembly. Then insert primary piston assembly.

- **Pay attention to direction of piston cups in figure at left. Also, insert pistons squarely to avoid scratches on cylinder bore.**
- **Pay attention to alignment of secondary piston slit with valve stopper mounting hole of cylinder body.**

NOTE:

For vehicles built after 2/00, the dampening valve will not be installed and all vehicles will have the ABS-style master cylinder.

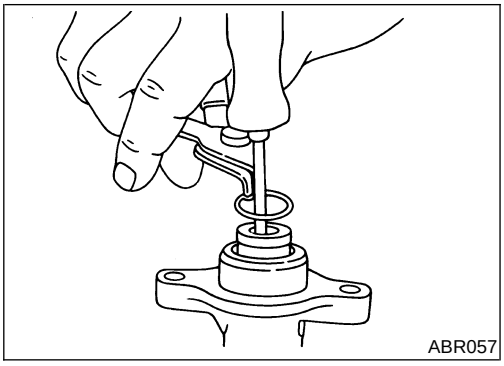

2. Install snap ring while pushing down on piston assemblies.

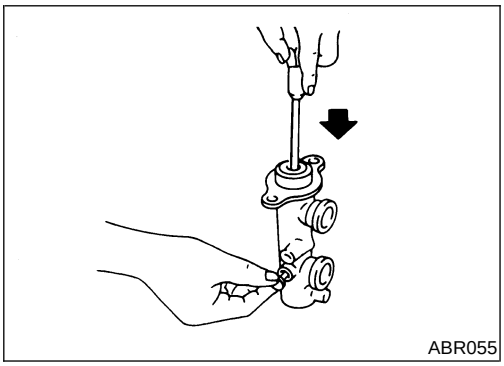

3. Install valve stopper while piston is pushed into cylinder.
4. Install seals and supply lines to master cylinder.

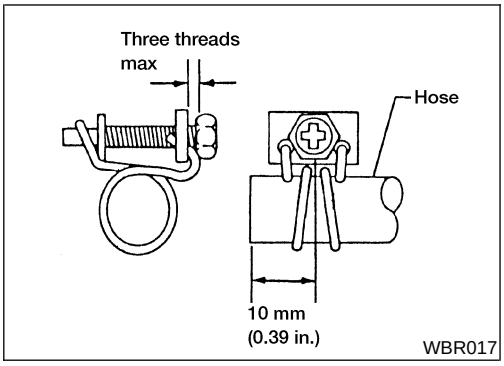

Installation

NDBR0023

CAUTION:

- **Refill with new brake fluid "DOT 3".**
- **Never reuse drained brake fluid.**

1. Place master cylinder onto brake booster and secure mounting nuts lightly.
2. Fix flare nuts to master cylinder.
3. Tighten mounting nuts.
   : 11.7 - 17.6 N·m (1.2 - 1.8 kg-m, 9 - 13 ft-lb)
4. Tighten flare nuts.
   : 15 - 18 N·m (1.5 - 1.8 kg-m, 11 - 13 ft-lb)
5. Tighten all hose clamps as shown at left.
6. Bleed air. Refer to "Bleeding Brake System", BR-7.

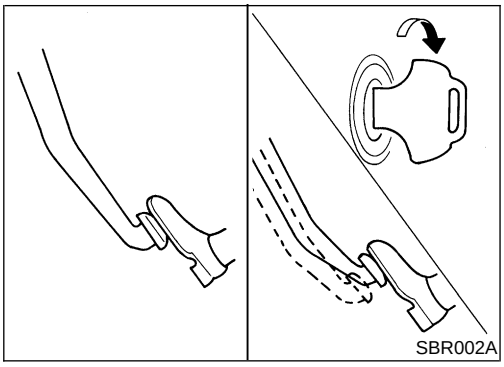

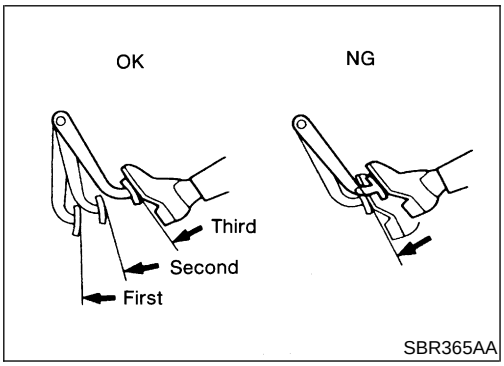

On-vehicle Service

NDBR0024

OPERATING CHECK

NDBR0024S01

- Depress brake pedal several times with engine off. After exhausting vacuum, make sure there is no change in pedal stroke.
- Depress brake pedal, then start engine. If pedal goes down slightly, operation is normal.

AIRTIGHT CHECK

NDBR0024S02

- Start engine, and stop it after one or two minutes. Depress brake pedal several times slowly. Booster is airtight if pedal stroke is less each time.
- Depress brake pedal while engine is running, and stop engine with pedal depressed. The pedal stroke should not change after holding pedal down for **30 seconds**.

Removal

NDBR0025

CAUTION:

- **Be careful not to splash brake fluid on painted areas; it may cause paint damage. If brake fluid is splashed on painted areas, wash it away with water immediately.**
- **Be careful not to deform or bend brake tubes during removal of booster.**

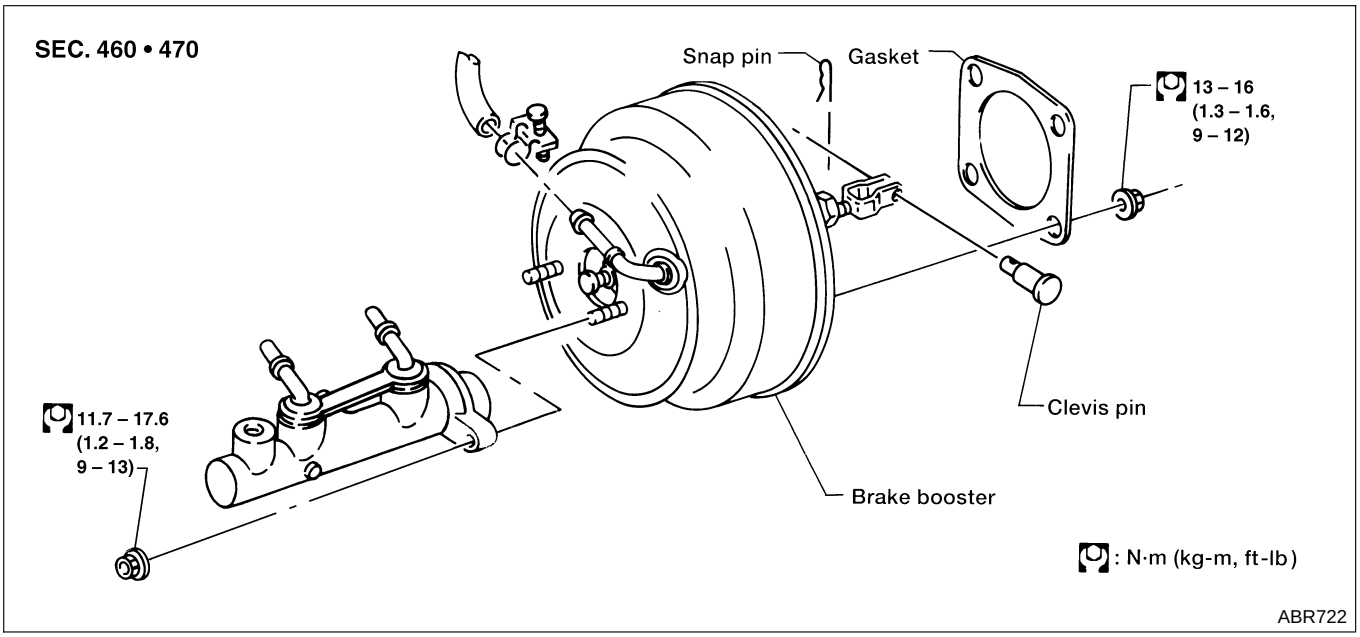

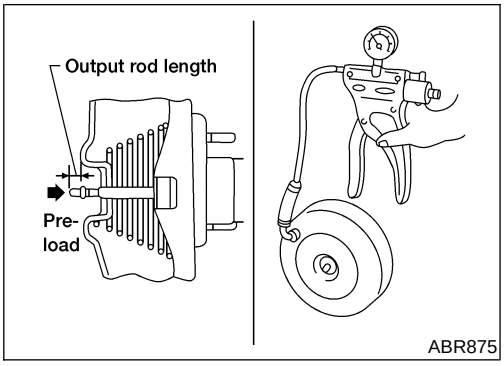

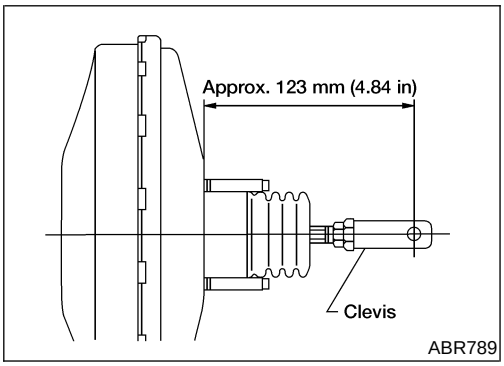

Inspection

NDBR0026

OUTPUT ROD LENGTH CHECK

NDBR0026S01

1. Apply vacuum of −66.7 kPa (−500 mmHg, −19.69 inHg) to brake booster with a hand vacuum pump.
2. Add preload of 19.6 N (2 kg, 4.4 lb) to output rod.
3. Check output rod length.

   Specified length:

   10.275 - 10.525 mm (0.4045 - 0.4144 in)

Installation

NDBR0027

CAUTION:

- **Be careful not to deform or bend brake tubes during installation of booster.**
- **Replace clevis pin if damaged.**
- **Refill with new brake fluid “DOT 3”.**
- **Never reuse drained brake fluid.**
- **Take care not to damage brake booster mounting bolt thread when installing. Due to the narrow angle of installation, the threads can be damaged by the dash panel.**

1. Before fitting booster, temporarily adjust clevis to dimension shown. Tighten clevis lock nut.

   : 16 - 22 N·m (1.6 - 2.2 kg-m, 12 - 16 ft-lb)
2. Fit booster, then secure mounting nuts (brake pedal bracket to brake booster) lightly.
3. Connect brake pedal and booster input rod with clevis pin.
4. Secure mounting nuts.

   : 13 - 16 N·m (1.3 - 1.6 kg-m, 9 - 12 ft-lb)
5. Install master cylinder. Refer to “Installation”, BR-17.

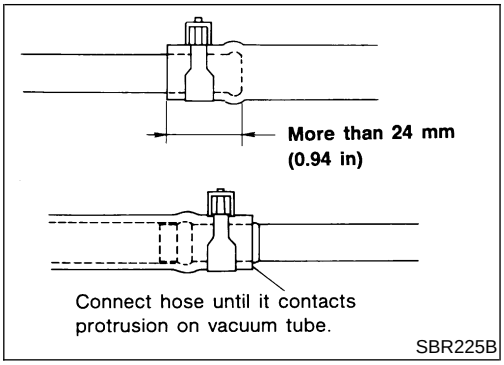

Removal and Installation

NDBR0028

CAUTION:

When installing vacuum hoses, pay attention to the following points.

- **Do not apply any oil or lubricants to vacuum hose and check valve.**
- **Insert vacuum tube into vacuum hose as shown.**

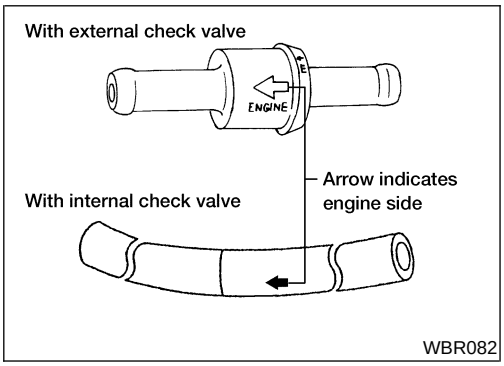

- **Install check valve or vacuum line with internal check valve, paying attention to its direction arrow.**

Inspection

NDBR0029

HOSES AND CONNECTORS

NDBR0029S01

Check vacuum lines, connections and check valve for airtightness, improper attachment, chafing or deterioration.

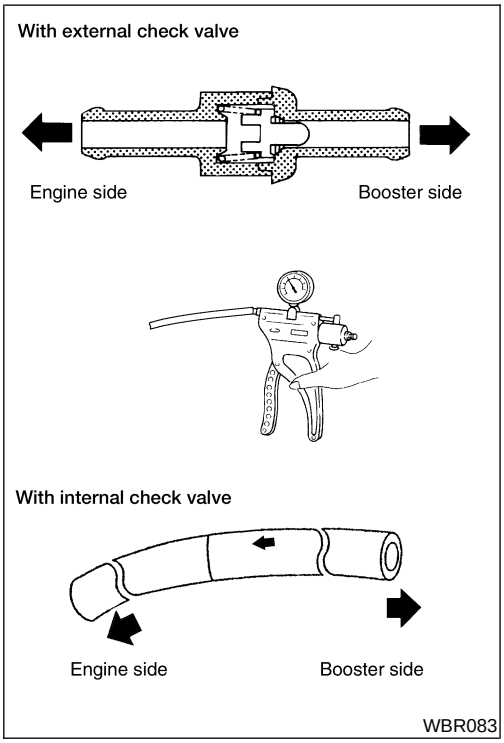

CHECK VALVE

NDBR0029S02

Check vacuum with a vacuum pump.

Connect to booster side	Vacuum should exist.
Connect to engine side	Vacuum should not exist.

Components

NDBR0030

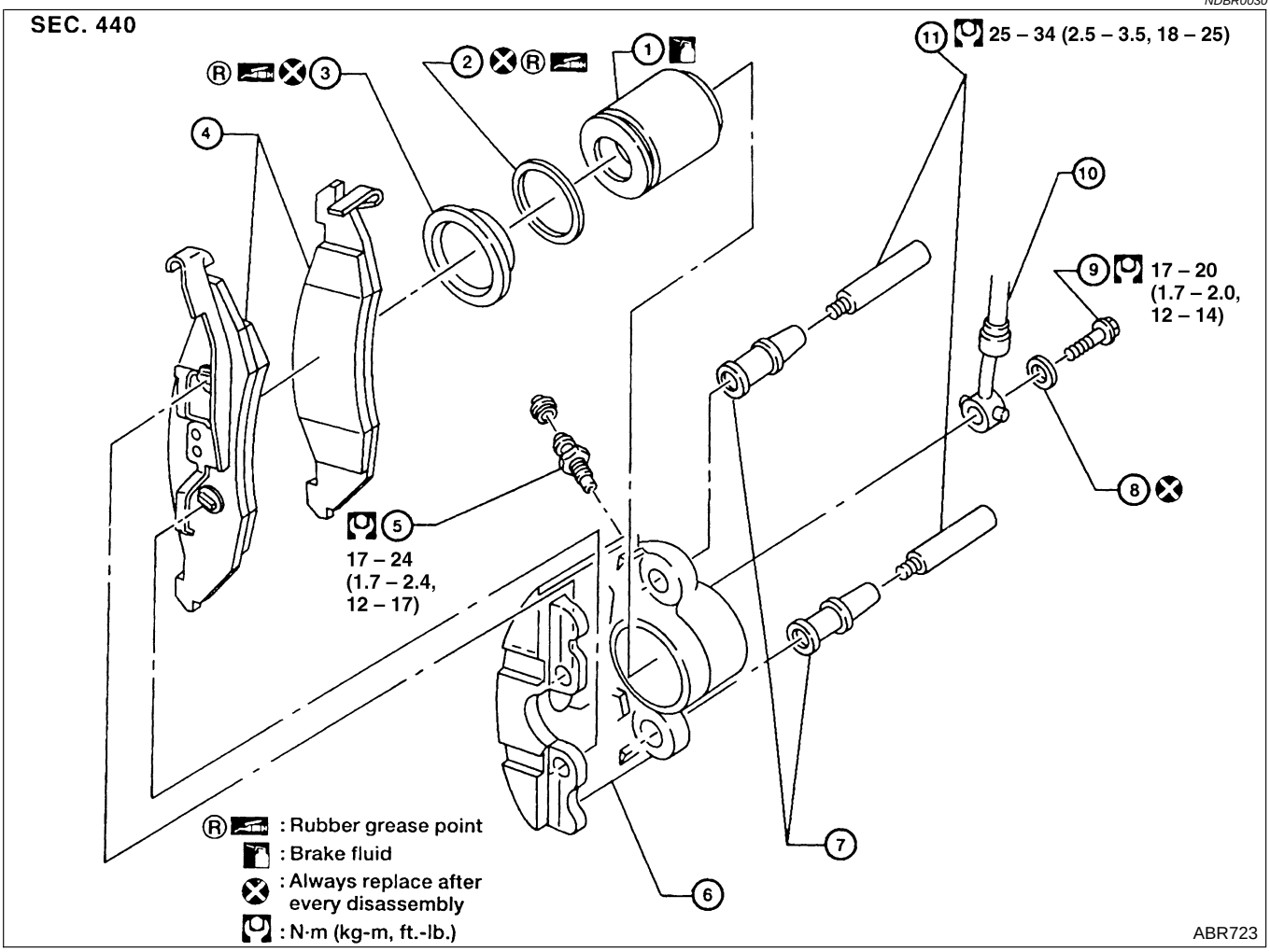

1. Piston
2. Piston seal
3. Dust seal
4. Pad
5. Air bleeder
6. Cylinder body
7. Pin boot
8. Copper washer
9. Connecting bolt
10. Brake hose
11. Main pin bolt

Pad Replacement

=NDBR0031

WARNING:

Clean brake pads with a vacuum dust collector to minimize the hazard of airborne particles or other materials.

CAUTION:

- **When cylinder body is open, do not depress brake pedal or caliper piston will pop out.**
- **Be careful not to damage piston boot or get oil on rotor.**
- **Suspend cylinder body with wire so as not to stretch brake hose.**
- **Burnish the brake contact surfaces after refinishing or replacing rotors, after replacing pads, or if a soft pedal occurs at very low mileage. Refer to "Brake Burnishing Procedure", BR-7.**

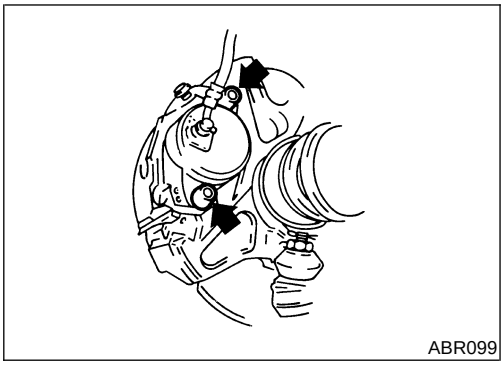
ABR099

1. Remove master cylinder reservoir cap.
2. Remove two pin bolts.

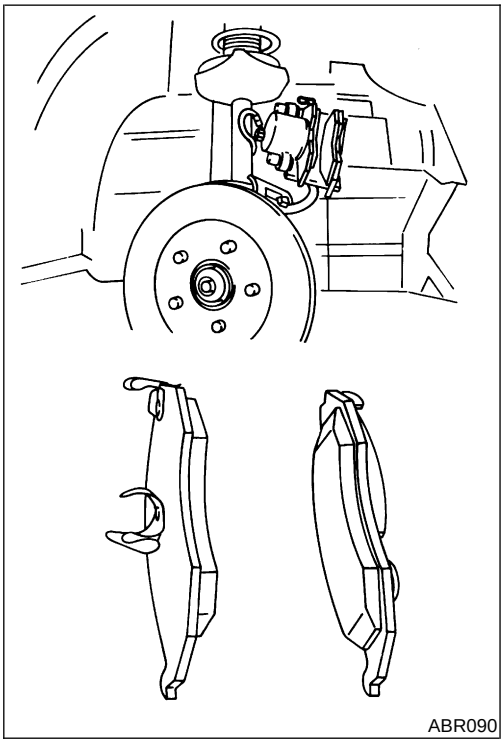
ABR090

3. Lift cylinder body off rotor. Then replace pads.

   Standard pad thickness:
   9.53 mm (0.3752 in)
   Pad wear limit:
   2.0 mm (0.079 in)

Carefully monitor brake fluid level because brake fluid will return to reservoir when pushing back piston.

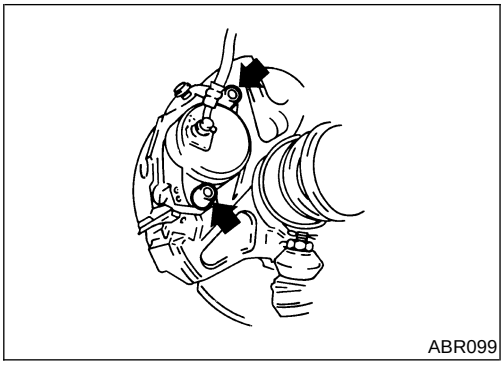
ABR099

Removal

=NDBR0032

WARNING:

Clean brake pads with a vacuum dust collector to minimize the hazard of airborne particles or other materials.

CAUTION:

Suspend caliper assembly with wire so as not to stretch brake hose.

Remove pin bolts.

It is not necessary to remove connecting bolt except for disassembly or replacement of caliper assembly. In this case, suspend caliper assembly with wire so as not to stretch brake hose.

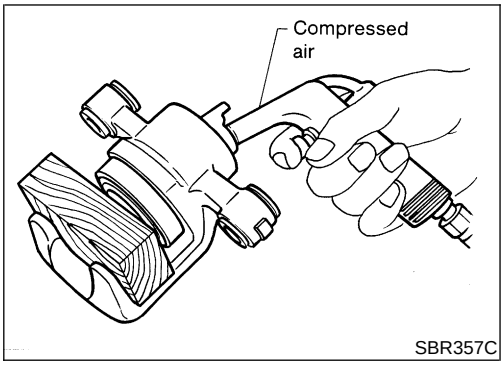

SBR357C

Disassembly

NDBR0033

WARNING:

Do not place your fingers in front of piston.

CAUTION:

- **Do not scratch or score cylinder wall.**
- **Do not pry directly against plastic piston when removing it from cylinder.**

1. Push out piston and dust seal with compressed air.
2. Remove piston seal with a suitable tool.

Inspection

NDBR0034

CALIPER

NDBR0034S01

Cylinder Body

NDBR0034S0101

- Check inside surface of cylinder for score, rust, wear, damage or presence of foreign objects. If any of the above conditions are observed, replace cylinder body.
- Minor damage from rust or foreign objects may be eliminated by polishing surface with a fine emery paper. Replace cylinder body if necessary.

CAUTION:

Use brake fluid to clean. Never use mineral oil.

Piston

NDBR0034S0102

Check piston for score, rust, wear, damage or presence of foreign objects. Replace if any of the above conditions are observed.

CAUTION:

Piston sliding surface is plastic. Do not polish with emery paper even if rust or foreign objects are stuck to sliding surface.

Slide Pin, Pin Bolt and Pin Boot

NDBR0034S0103

Check for wear, cracks or other damage. Replace if any of the above conditions are observed.

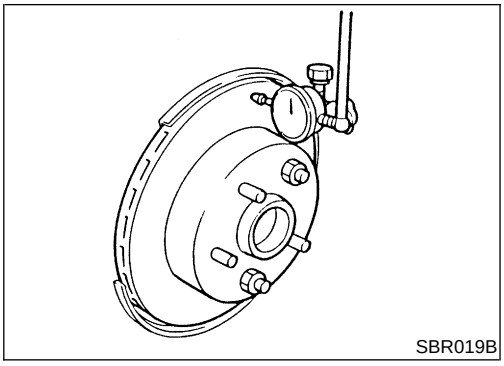
SBR019B

ROTOR

NDBR0034S02

Runout

NDBR0034S0201

1. Secure rotor to wheel hub with at least two nuts (M12 x 1.25).
2. Check runout using a dial indicator.
   Make sure that wheel bearing axial end play is within the specifications before measuring. Refer to "Front Wheel Bearing", *AX-4*.

   Maximum runout:
   0.07 mm (0.0028 in)

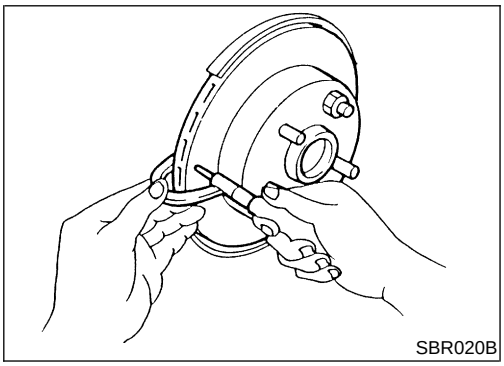
SBR020B

3. If the runout is out of specification, find minimum runout position as follows:
   a. Remove nuts and rotor from wheel hub.
   b. Shift the rotor one hole and secure rotor to wheel hub with nuts.
   c. Measure runout.
   d. Repeat steps a through c so that minimum runout position can be found.
4. If the runout is still out of specification, turn rotor with on-car brake lathe ("MAD, DL-8700", "AMMCO 700 and 705" or equivalent).

Thickness

NDBR0034S0202

Thickness variation (At least 8 positions):
Maximum 0.01 mm (0.0004 in)

If thickness variation exceeds the specification, turn rotor with on-car brake lathe.

Rotor repair limit:
Minimum thickness
24.0 mm (0.945 in)

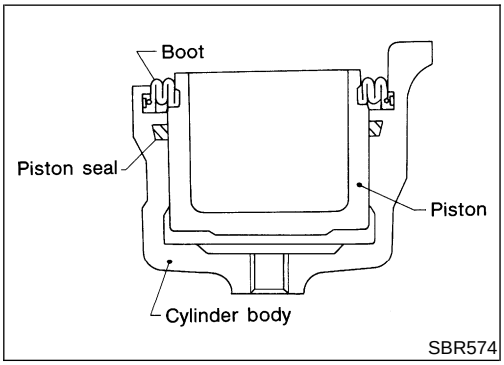

SBR574

Assembly

NDBR0035

1. Insert piston seal into groove on cylinder body.
2. With piston boot fitted to piston, insert piston boot into groove on cylinder body and install piston.
3. Properly secure piston boot.

Installation

NDBR0036

CAUTION:

- **Refill with new brake fluid "DOT 3".**
- **Never reuse drained brake fluid.**

1. Install caliper assembly.
2. Install brake hose to caliper securely.
3. Install all parts and secure all bolts.
4. Bleed air. Refer to "Bleeding Brake System", BR-7.

Components

NDBR0037

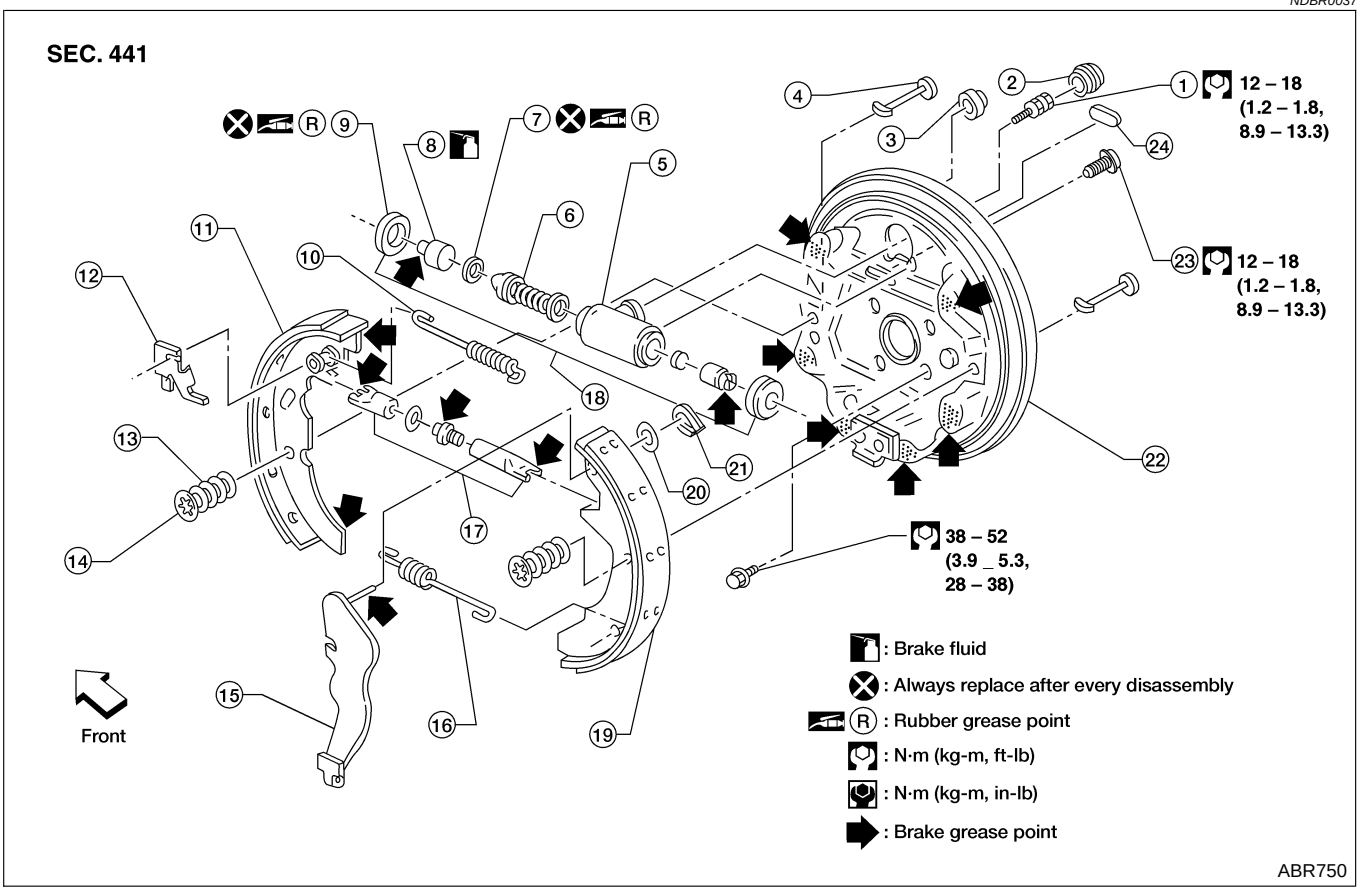

1. Air bleeder
2. Air bleeder cap
3. Shoe inspection hole plug
4. Shoe hold-down pin
5. Cylinder body
6. Spring
7. Piston cap
8. Piston
9. Dust cover
10. Adjuster spring
11. Shoe
12. Adjusting lever
13. Shoe hold-down spring
14. Retainer
15. Toggle lever
16. Return spring
17. Adjuster
18. Wheel cylinder
19. Shoe
20. Washer
21. Retainer ring
22. Back plate
23. Wheel cylinder bolt
24. Adjuster plug

Removal

NDBR0038

WARNING:

Clean brake lining with a vacuum dust collector to minimize the hazard of airborne materials or other materials.

CAUTION:

Make sure parking brake lever is completely released.

1. Release parking brake lever fully, then remove drum.
   If drum is hard to remove, the following procedures should be carried out.

a. Remove adjuster plug. Shorten adjuster as shown to make clearance between brake shoe and drum.

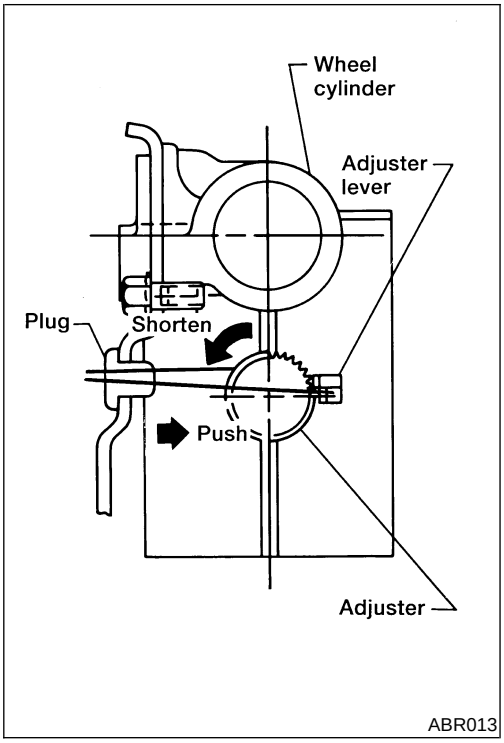

b. Install two bolts as shown. Tighten the two bolts gradually.

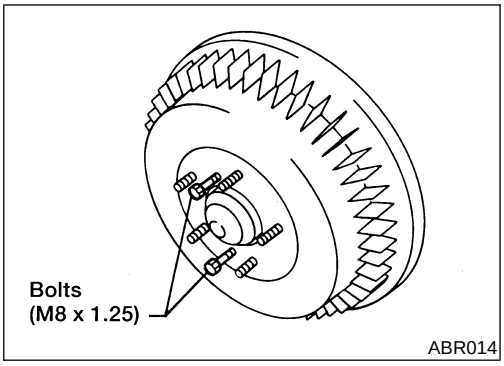

2. After removing retainer, remove spring by rotating shoes.

Be careful not to damage parking brake cable when separating it.

3. Remove adjuster.
4. Disconnect parking brake cable from toggle lever.

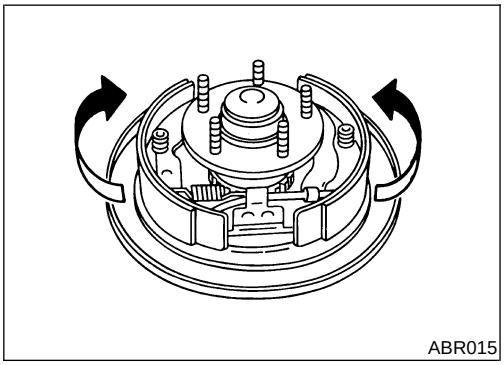

5. Remove retainer ring with a suitable tool. Then separate toggle lever and brake shoe.

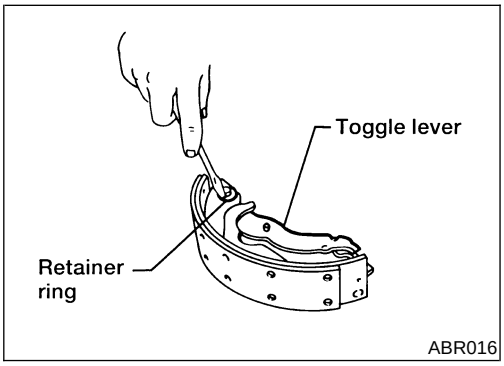

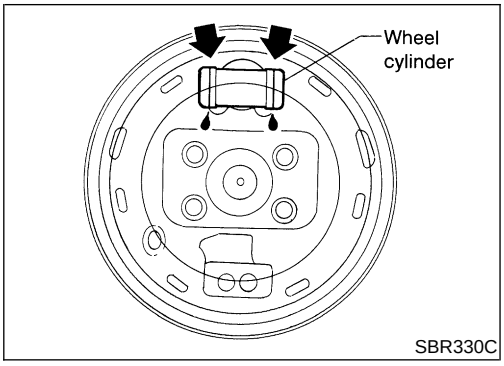

SBR330C

Inspection

NDBR0039

WHEEL CYLINDER

NDBR0039S01

- Check wheel cylinder for leakage.
- Check for wear, damage and loose conditions. Replace if any such condition exists.

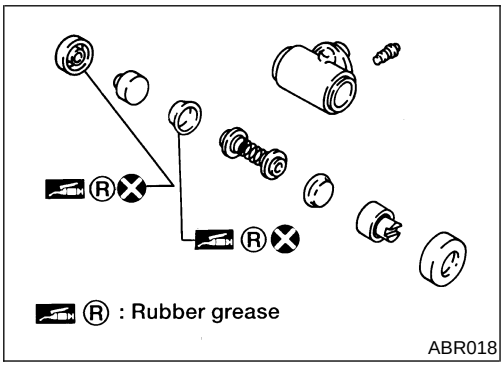

ABR018

WHEEL CYLINDER OVERHAUL

NDBR0039S02

- Check all internal parts for wear, rust and damage. Replace if necessary.
- Be careful not to scratch cylinder when installing pistons.

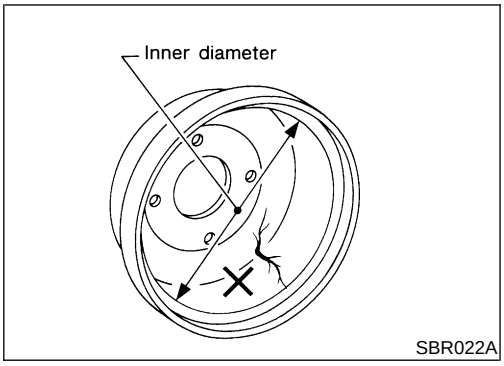

SBR022A

DRUM

NDBR0039S03

Maximum inner diameter:
250 mm (9.84 in)
Out-of-roundness:
0.015 mm (0.0006 in) or less

- Contact surface should be fine finished with No. 120 to 150 emery paper.
- Using a drum lathe, resurface brake drum if it shows score, partial wear or stepped wear.
- After brake drum has been completely reconditioned or replaced, check drum and shoes for proper contact pattern.

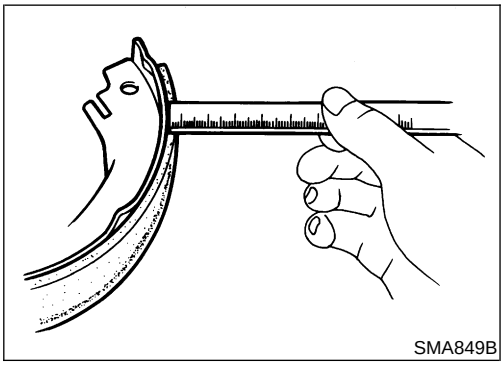
SMA849B

LINING

NDBR0039S04

Check lining thickness.

Standard lining thickness:
5.9 mm (0.232 in)
Lining wear limit:
2.0 mm (0.079 in)

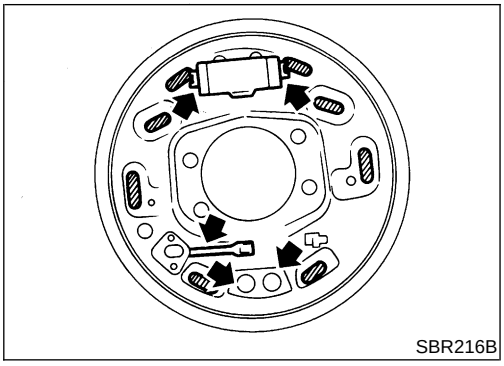
SBR216B

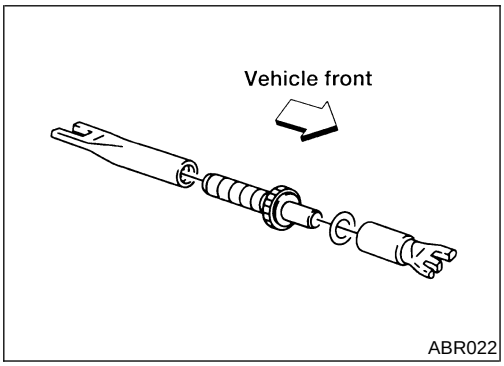

ABR022

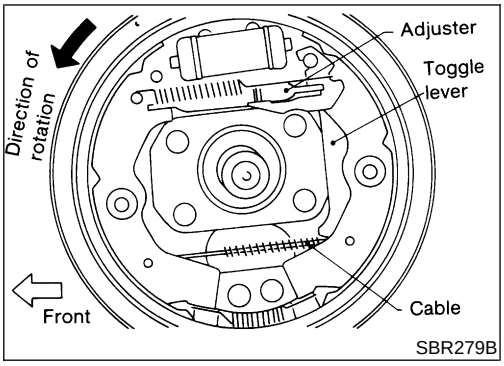

SBR279B

Installation

=NDBR0042

- **Always perform shoe clearance adjustment. Refer to "Adjustment", BR-30.**
- **Burnish the brake contact surfaces after refinishing or replacing drums, after replacing linings, or if a soft pedal occurs at very low mileage. Refer to "Brake Burnishing Procedure", BR-7.**

1. Fit toggle lever to brake shoe with retainer ring.
2. Apply brake grease to the contact areas shown at left.

3. Shorten adjuster by rotating it.
- Pay attention to direction of adjuster.

Wheel	Screw
Left	Left-hand thread
Right	Right-hand thread

4. Connect parking brake cable to toggle lever.
5. Install all parts.

Be careful not to damage wheel cylinder piston boots.

6. Check that all parts are installed properly.

Pay attention to direction of adjuster assembly.

7. Install brake drum.
8. When installing new wheel cylinder or overhauling wheel cylinder, bleed air. Refer to "Bleeding Brake System", BR-7.
9. Adjust parking brake. Refer to "Adjustment", BR-30.

Components

NDBR0043

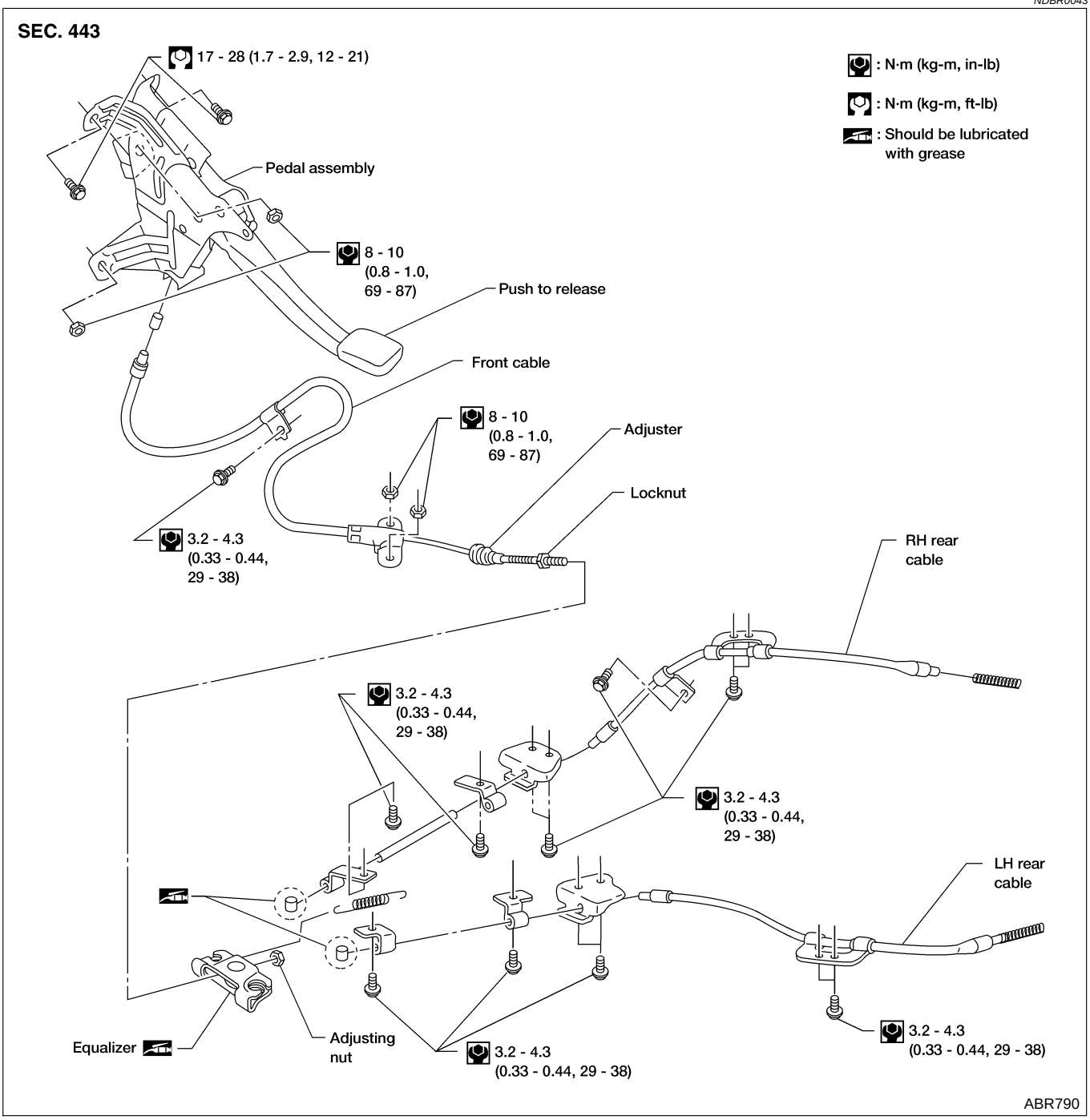

Removal and Installation

NDBR0044

- Parking brake cables can be removed without removing pedal assembly.
- In order to access front cable, remove center console, then pull carpet back.

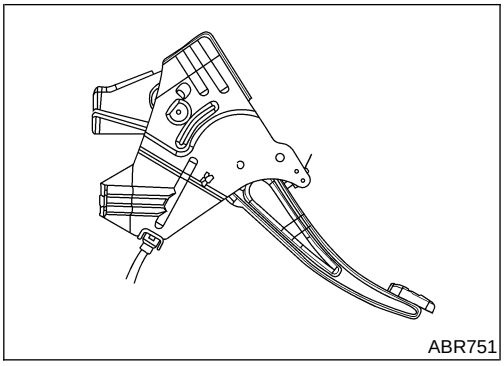
ABR751

- The figure at left shows how the release cable is connected to parking brake pedal assembly.

Inspection

NDBR0045

1. Check pedal assembly for wear or other damage. Replace if necessary.
2. Check wires for discontinuity or deterioration. Replace if necessary.
3. Check parking brake switch and warning lamp. Warning lamp should come on when depressing pedal one notch. Replace if necessary.
4. Check parts at each connecting portion and, if found deformed or damaged, replace.

Adjustment

NDBR0046

- **Before adjustment, adjust clearance between shoe and drum correctly, depress and push to release the parking brake pedal several times until clicking sound from rear brake is not present.**
- **After adjustment, make sure that there is no drag when parking brake pedal is released.**

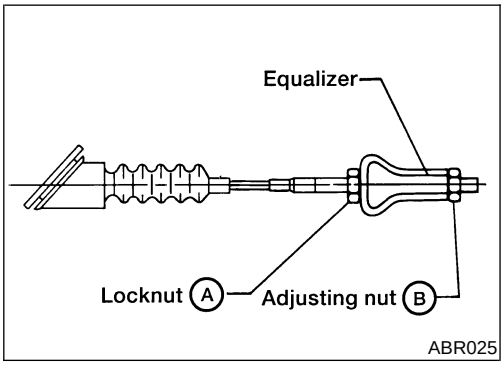

ABR025

1. Loosen lock nut **A**, rotate adjusting nut **B**.

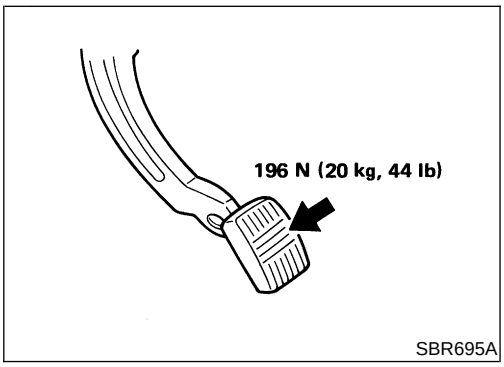

SBR695A

2. Depress parking brake pedal with specified amount of force and rotate adjusting nut **B** until the number of notches (clicks heard) are set. Check pedal stroke and ensure smooth operation.

   Number of notches:
   5 - 6
3. Tighten lock nut **A** and adjusting nut **B**.

   : 7.8 - 9.8 N·m (0.8 - 1.0 kg-m, 69 - 87 in-lb)

Purpose

NDBR0047

The Anti-Lock Brake System (ABS) consists of electronic and hydraulic components. It allows for control of braking force so locking of the wheels can be avoided.

1) Improves proper tracking performance through steering wheel operation.
2) Eases obstacle avoidance through steering wheel operation.
3) Improves vehicle stability.

Operation

NDBR0048

- When the vehicle speed is less than 10 km/h (6 MPH) this system does not work.
- The Anti-Lock Brake System (ABS) has a self-test function. The system turns on the ABS warning lamp for 1 second each time the ignition switch is turned “ON”. After the engine is started, the ABS warning lamp turns off. The system performs a test the first time the vehicle reaches 6 km/h (4 MPH). A mechanical noise may be heard as the ABS performs this self-test. This is a normal part of the self-test feature. If a malfunction is found during this check, the ABS warning lamp will stay on.
- While driving, a mechanical noise may be heard during ABS operation. This is a normal condition.

ABS Hydraulic Circuit

NDBR0049

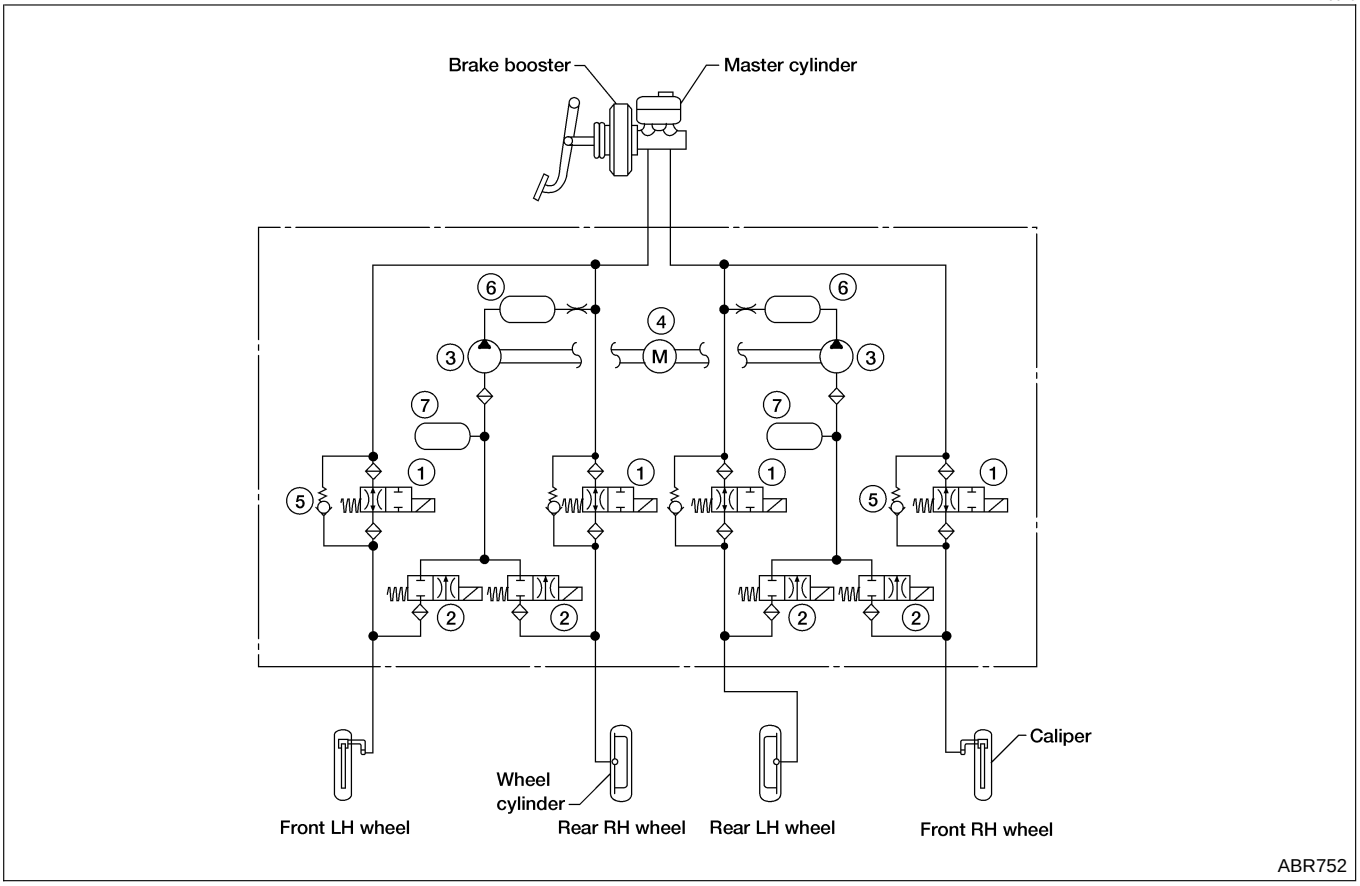

1. Inlet solenoid valve
2. Outlet solenoid valve
3. Pump
4. Motor
5. Bypass check valve
6. Damper
7. Solenoid valve relay actuator

System Components

NDBR0050

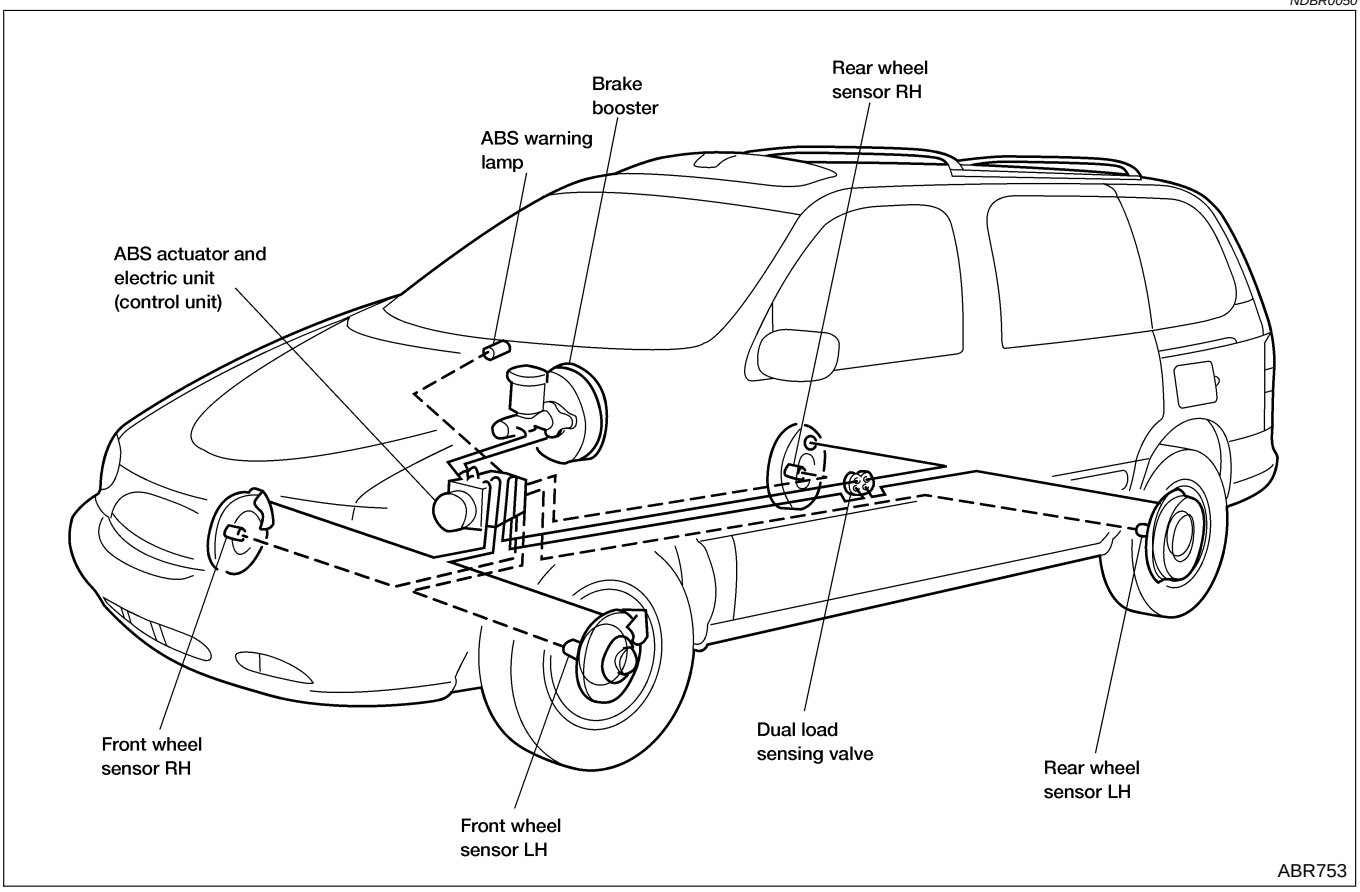

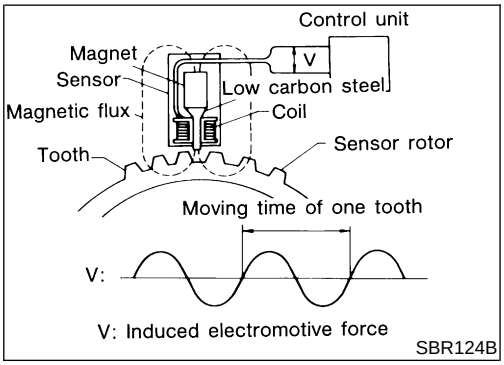

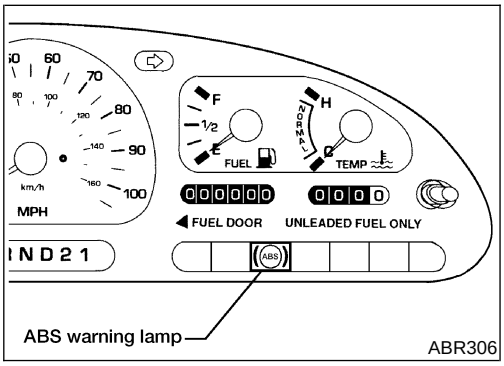

System Description

NDBR0051

SENSOR

NDBR0051S01

The sensor unit consists of a gear-shaped sensor rotor and a sensor element. The element contains a bar magnet around which a coil is wound. The front sensors are installed on the front spindles and the rear sensors are installed on the rear spindles. As the wheel rotates, the sensor generates a sine-wave pattern. The frequency and voltage increase(s) as the rotating speed increases.

CONTROL UNIT (BUILT-IN ABS ACTUATOR AND ELECTRIC UNIT)

NDBR0051S02

The control unit computes the wheel rotating speed by the signal current sent from the sensor. Then it supplies a DC current to the actuator solenoid valve. It also controls ON-OFF operation of the valve relay and motor relay. If any electrical malfunction should be detected in the system, the control unit causes the warning lamp to light up. In this condition, the ABS will be deactivated by the control unit, and the vehicle's brake system reverts to normal operation. (For control unit layout, refer to "ABS ACTUATOR AND ELECTRIC UNIT", BR-33.)

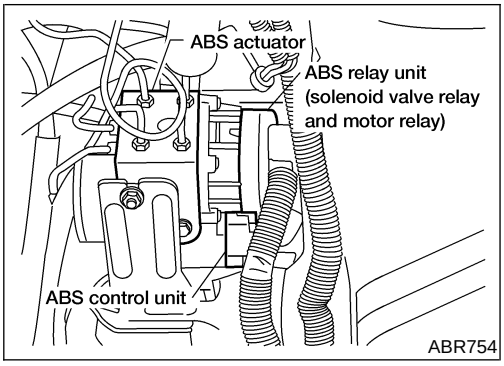

ABS ACTUATOR AND ELECTRIC UNIT

NDBR0051S04

The ABS actuator and electric unit contains:

- An electric motor and pump
- Two relays
- Eight solenoid valves, each inlet and outlet for
  — LH front
  — RH front
  — LH rear
  — RH rear
- ABS control unit

This component controls the hydraulic circuit and increases, holds or decreases hydraulic pressure to all or individual wheels. The ABS actuator and electric unit is serviced as an assembly.

ABS Actuator Operation

NDBR0051S0401

		Inlet solenoid valve	Outlet solenoid valve	
Normal brake operation		OFF (Open)	OFF (Closed)	Master cylinder brake fluid pressure is directly transmitted to caliper via the inlet solenoid valve.
ABS operation	Pressure hold	ON (Closed)	OFF (Closed)	Hydraulic circuit is shut off to hold the caliper brake fluid pressure.
	Pressure decrease	ON (Closed)	ON (Open)	Caliper brake fluid is sent to reservoir via the outlet solenoid valve. Then it is pushed up to the master cylinder by pump.
	Pressure increase	OFF (Open)	OFF (Closed)	Master cylinder brake fluid pressure is transmitted to caliper.

Component Parts and Harness Connector Location

NDBR0052

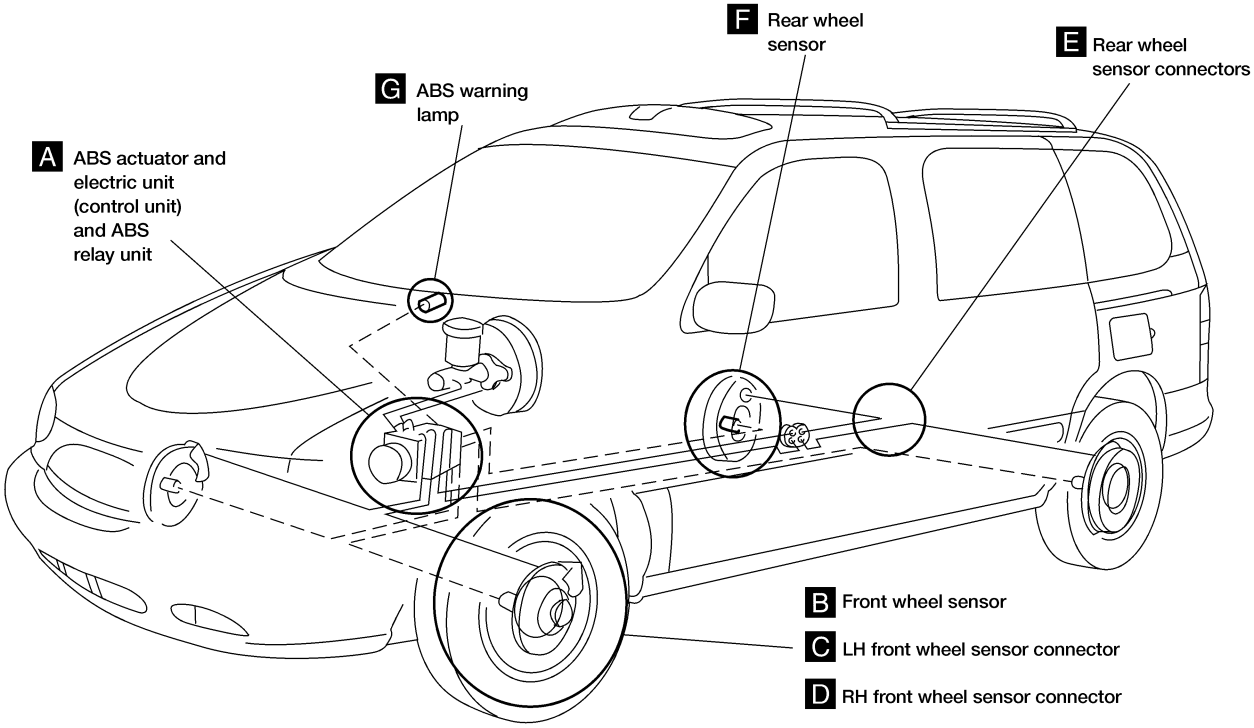

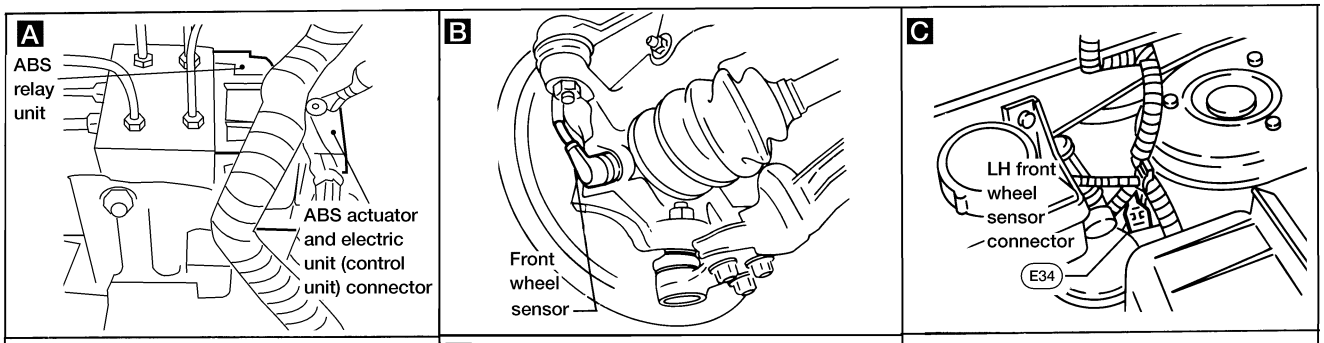

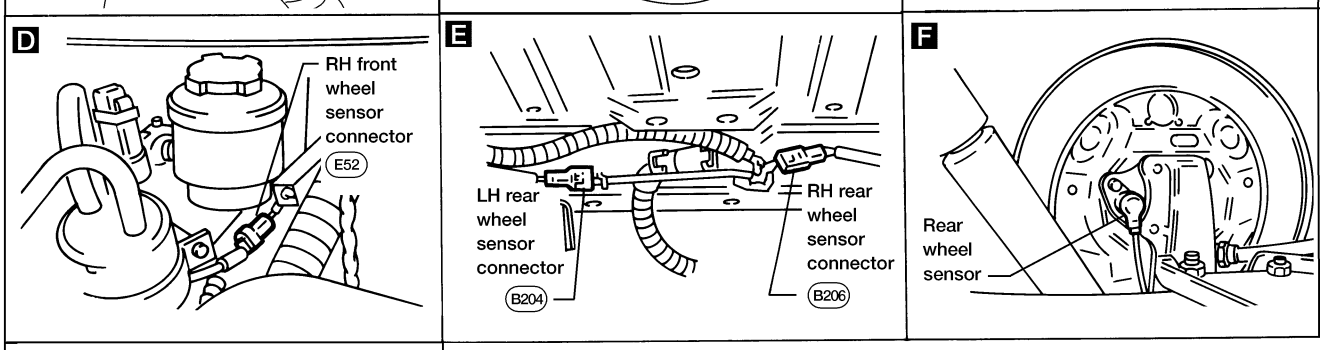

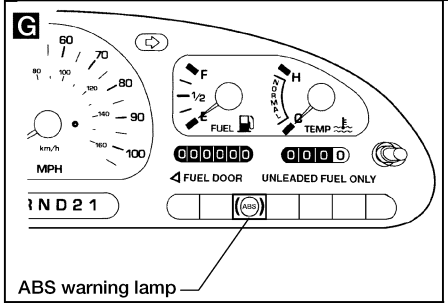

ABR791

Schematic

NDBR0053

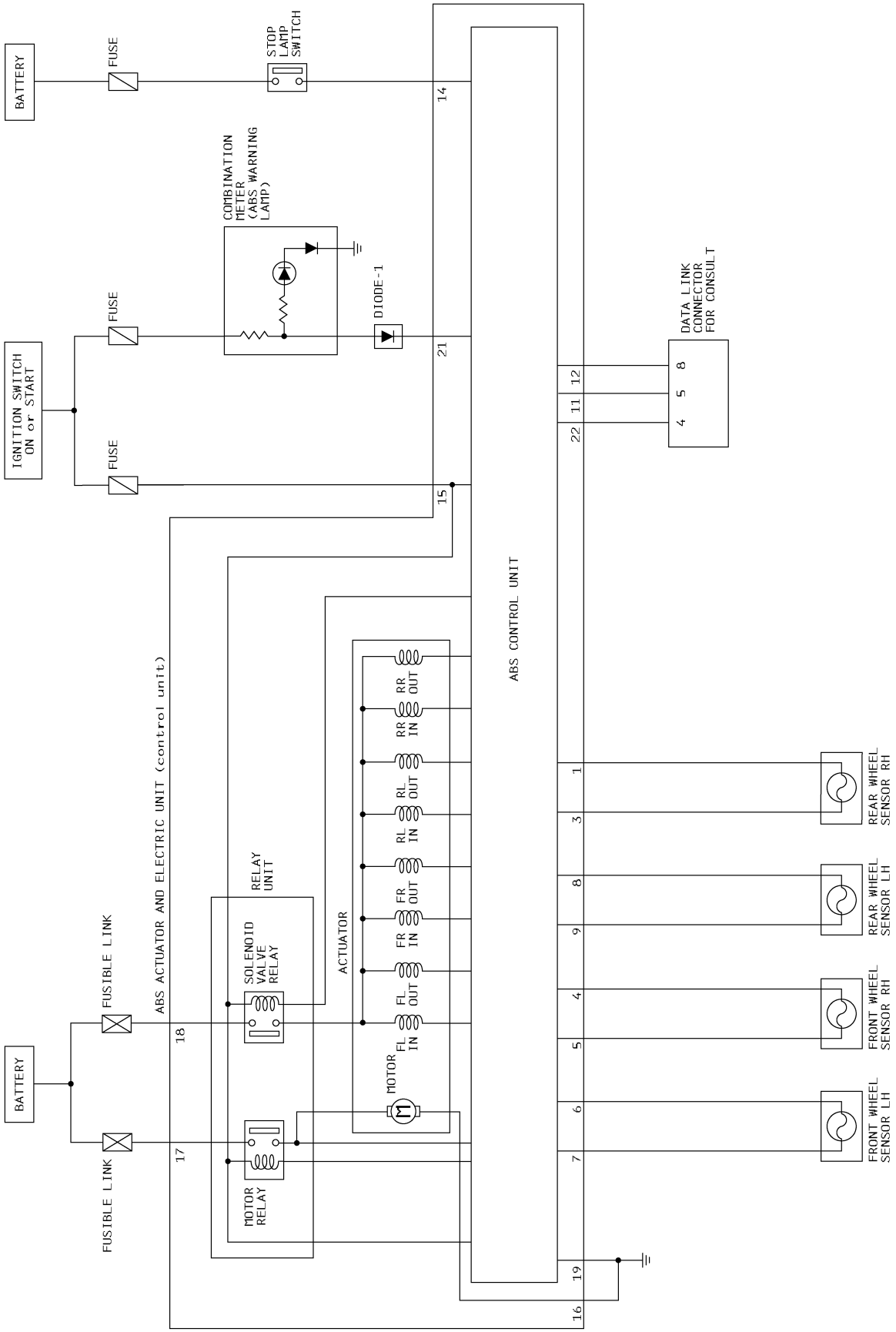

WBR011

Wiring Diagram — ABS —

NDBR0054

BR-ABS-01

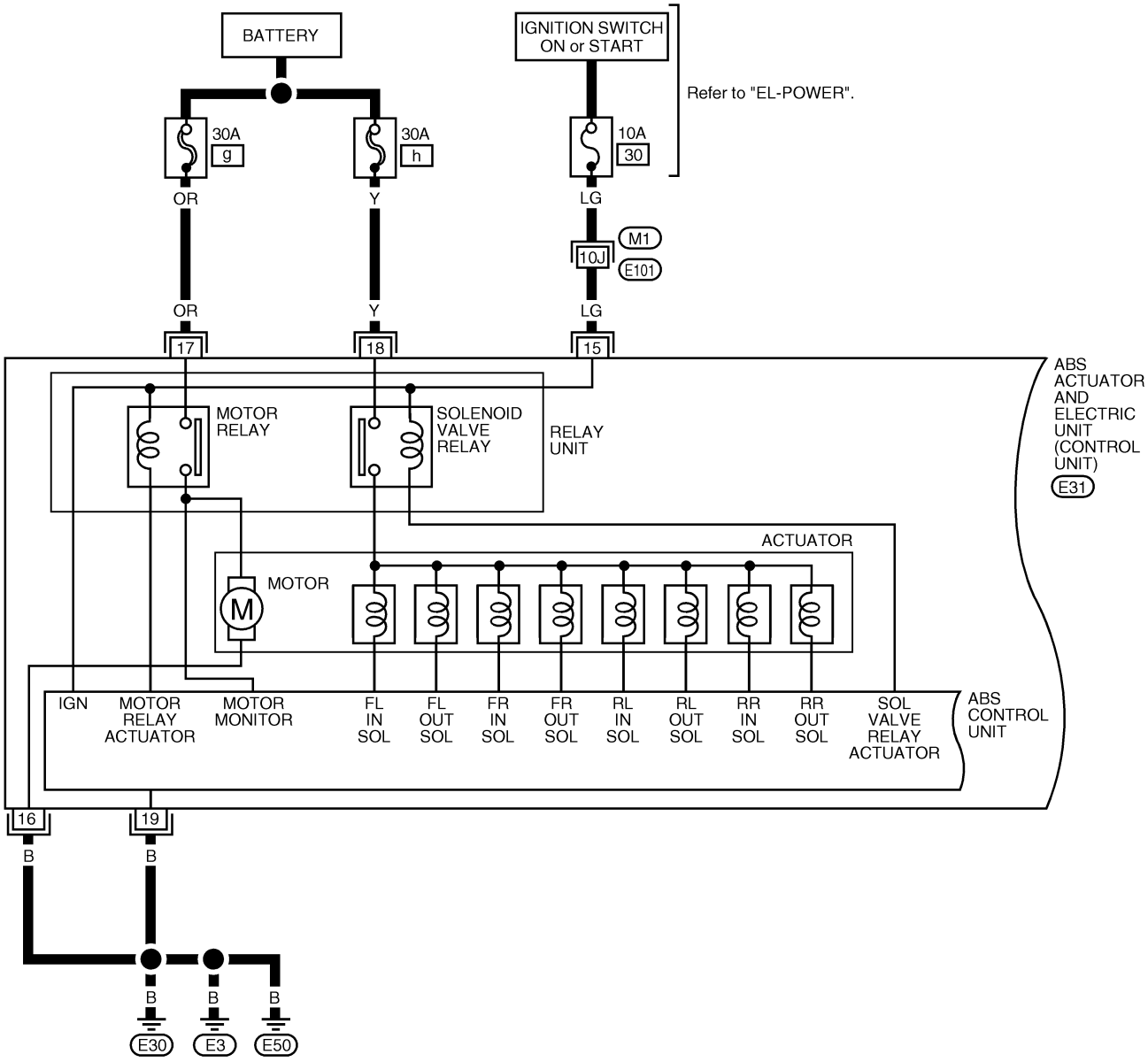

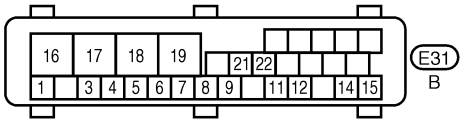

Refer to the following.
M1 , E101 - SUPER MULTIPLE JUNCTION (SMJ)

WBR008

BR-ABS-02

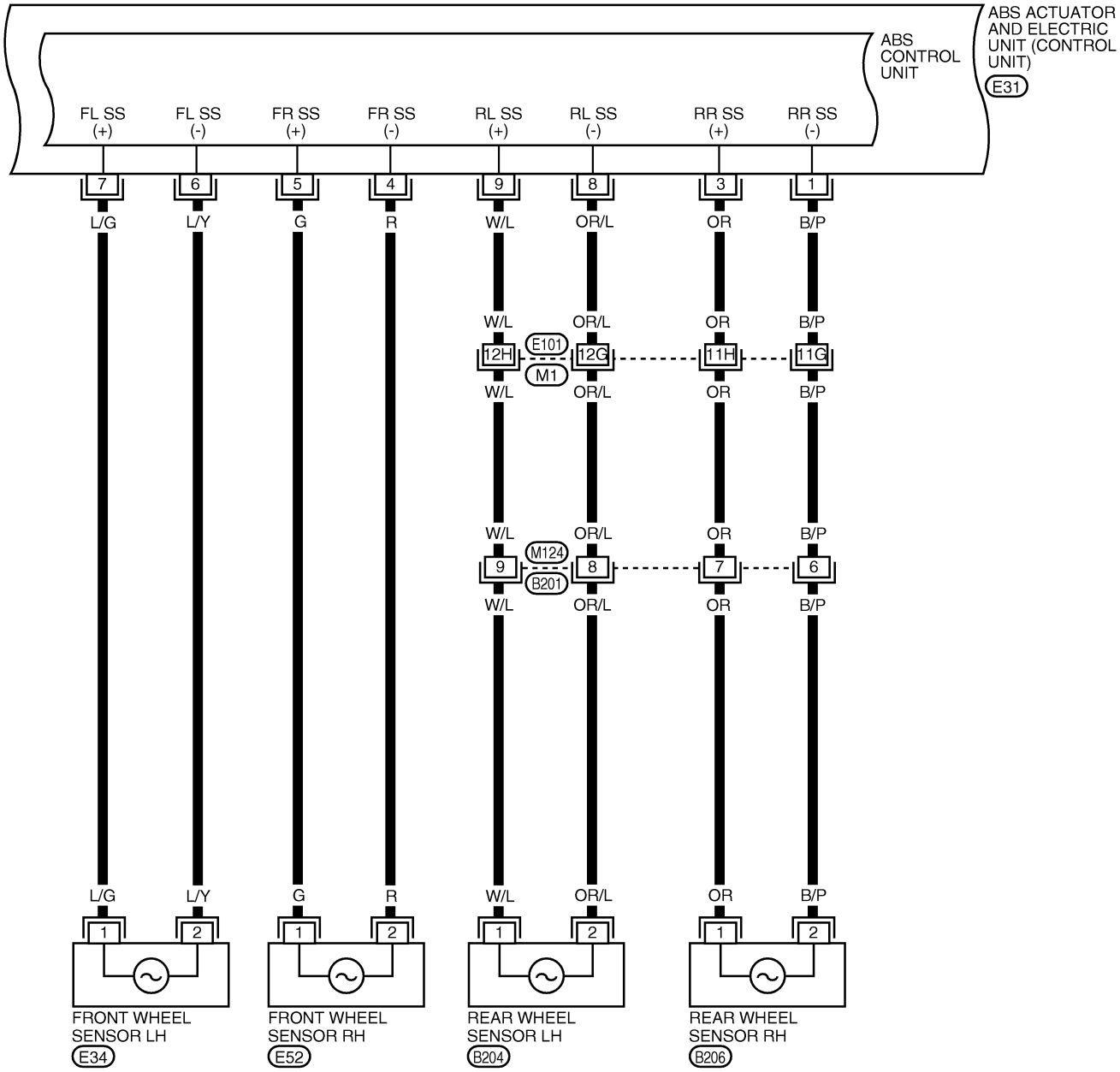

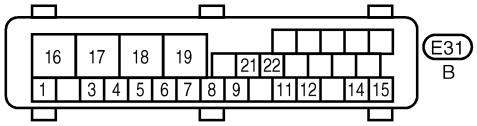

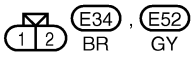

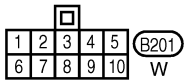

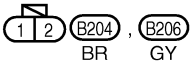

Refer to the following.
M1 , E101 - SUPER MULTIPLE JUNCTION (SMJ)

WBR009

BR-ABS-03

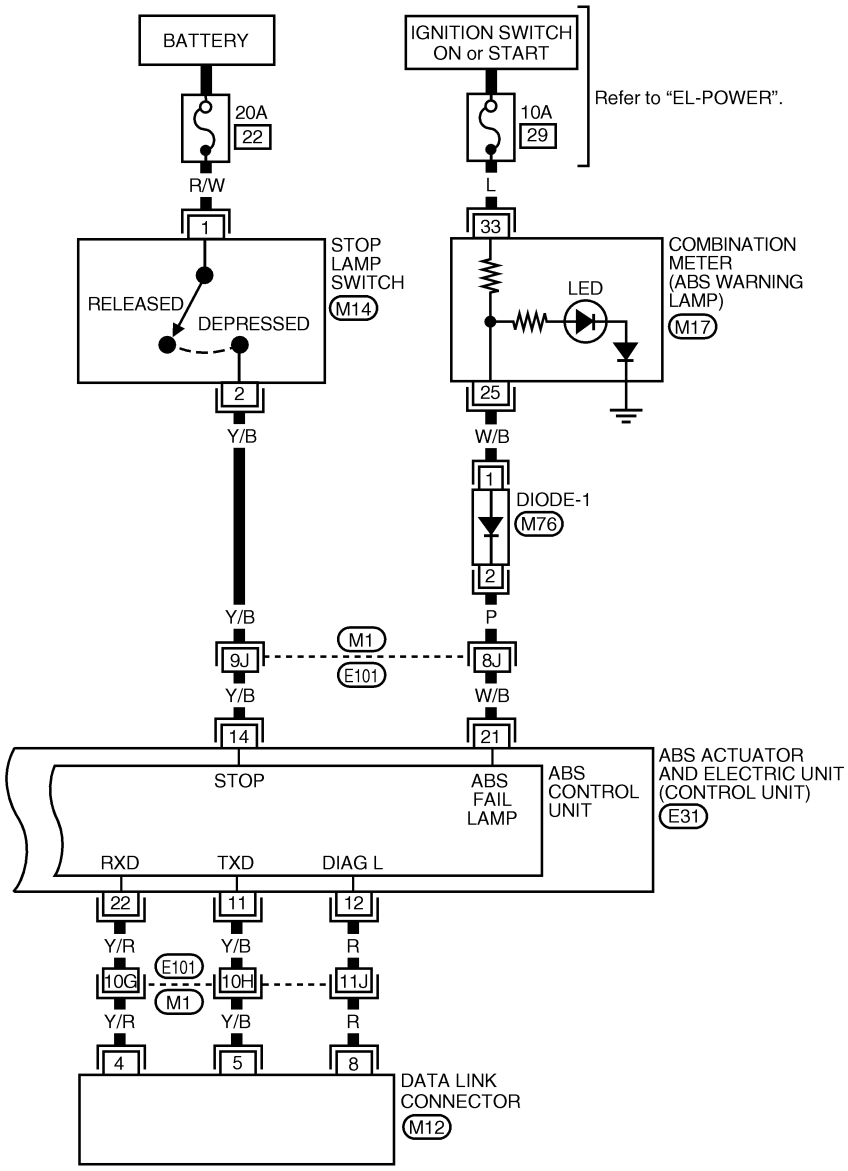

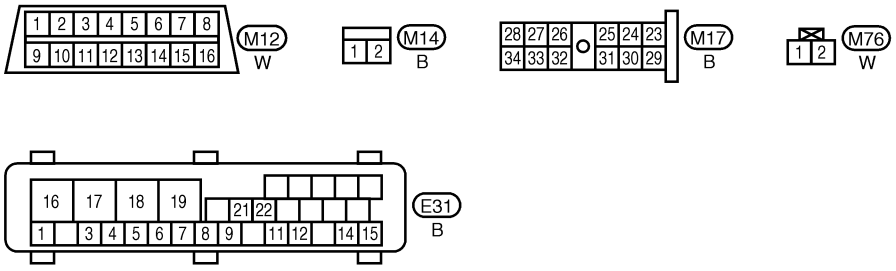

Refer to the following.
M1 , E101 - SUPER MULTIPLE JUNCTION (SMJ)

WBR010

Self-diagnosis

NDBR0055

FUNCTION

NDBR0055S01

- When a problem occurs in the ABS, the warning lamp on the instrument panel comes on. To start the self-diagnostic results mode, ground the self-diagnostic (check) terminal located on “Data Link Connector”. The location of the malfunction is indicated by the warning lamp flashing.

SELF-DIAGNOSIS PROCEDURE

NDBR0055S02

1. Drive vehicle over 30 km/h (19 MPH) for at least one minute.
2. Turn ignition switch OFF.
3. Ground terminal 5 of “Data Link Connector” with a suitable harness.
4. Turn ignition switch ON while grounding terminal 5.
   Do not depress brake pedal.

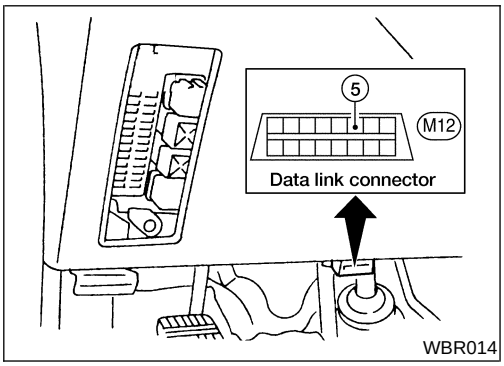

5. After 3.0 seconds, the warning lamp starts flashing to indicate the malfunction code No. (See NOTE.)
6. Verify the location of the malfunction with the malfunction code chart. Refer to “Malfunction Code/Symptom Chart”, BR-52. Then make the necessary repairs following the diagnostic procedures.
7. After the malfunctions are repaired, erase the malfunction codes stored in the control unit. Refer to “HOW TO ERASE SELF-DIAGNOSTIC RESULTS (MALFUNCTION CODES)”, BR-40.
8. Rerun the self-diagnostic results mode to verify that the malfunction codes have been erased.

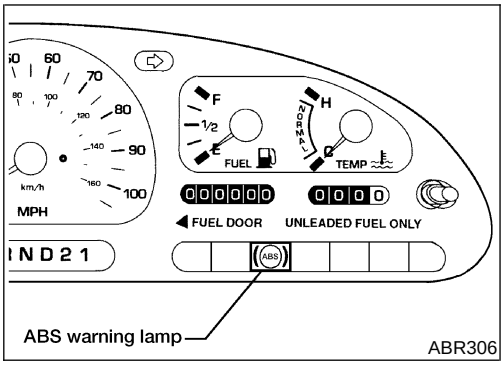

9. Disconnect the check terminal from the ground. The self-diagnostic results mode is now complete.
10. Check warning lamp for deactivation after driving vehicle over 30 km/h (19 MPH) for at least one minute.
11. After making certain that warning lamp does not come on, test the ABS in a safe area to verify that it functions properly.

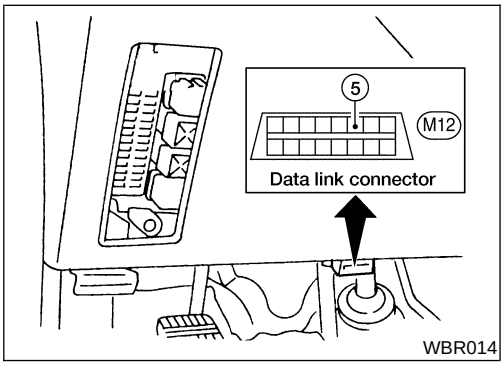

NOTE:
The indication terminates after 5 minutes.
However, when the ignition switch is turned from OFF to ON, the indication starts flashing again.

HOW TO READ SELF-DIAGNOSTIC RESULTS (MALFUNCTION CODES)

=NDBR0055S03

1. Determine the code No. by counting the number of times the warning lamp flashes on and off.
2. When several malfunctions occur at one time, up to three code numbers can be stored; the latest malfunction will be indicated first.
3. The indication begins with the start code 12. After that a maximum of three code numbers appear in the order of the latest one first. The indication then returns to the start code 12 to repeat (the indication will stay on for five minutes at the most).
4. The malfunction code chart is given on page "Malfunction Code/Symptom Chart", BR-52.

Example: Code No. 32 REAR SENSOR SHORT-CIRCUIT

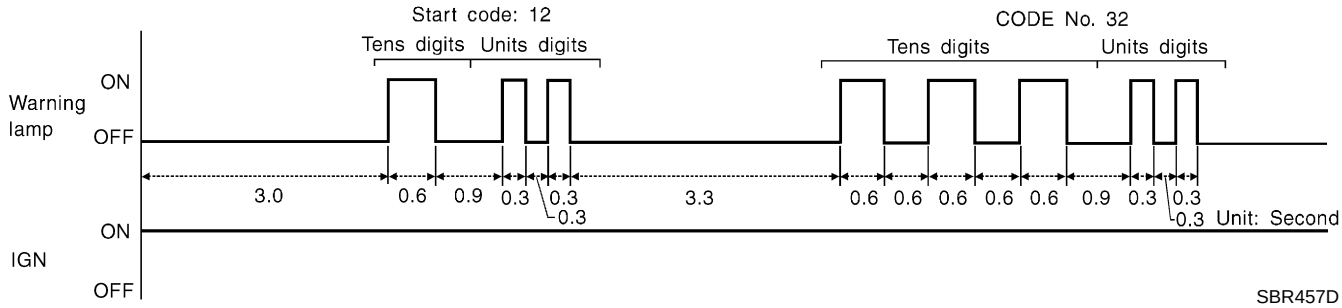

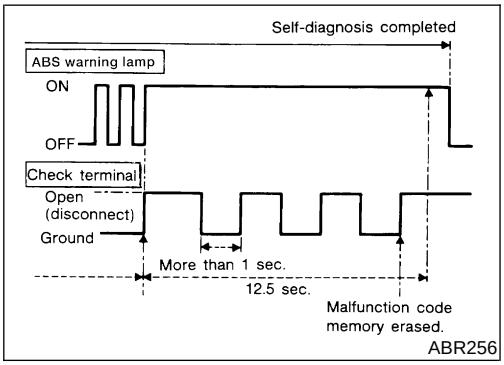

HOW TO ERASE SELF-DIAGNOSTIC RESULTS (MALFUNCTION CODES)

NDBR0055S04

1. Disconnect the check terminal from ground (ABS warning lamp will stay lit).
2. Within 12.5 seconds, ground the check terminal three times. Each terminal ground must last more than 1 second. The ABS warning lamp goes out after the erase operation has been completed.
3. Perform self-diagnosis again. Refer to "SELF-DIAGNOSIS PROCEDURE", BR-39. Only the start code should appear, no malfunction codes.

CONSULT-II

=NDBR0056

CONSULT-II APPLICATION TO ABS

NDBR0056S01

ITEM	SELF-DIAGNOSTIC RESULTS	DATA MONITOR	ACTIVE TEST
Front right wheel sensor	×	×	—
Front left wheel sensor	×	×	—
Rear right wheel sensor	×	×	—
Rear left wheel sensor	×	×	—
ABS sensor	×	—	—
Stop lamp switch	—	×	—
Front right inlet solenoid valve	×	×	×
Front right outlet solenoid valve	×	×	×
Front left inlet solenoid valve	×	×	×
Front left outlet solenoid valve	×	×	×
Rear right inlet solenoid valve	×	×	×
Rear right outlet solenoid valve	×	×	×
Rear left inlet solenoid valve	×	×	×
Rear left outlet solenoid valve	×	×	×
Actuator solenoid valve relay	×	×	—
Actuator motor relay (ABS MOTOR is shown on the Data Monitor screen.)	×	×	×
ABS warning lamp	—	×	—
Battery voltage	×	×	—
Control unit	×	—	—

×: Applicable
—: Not applicable

ECU (ABS CONTROL UNIT) PART NUMBER MODE

NDBR0056S02

Ignore the ECU part number displayed in the ECU PART NUMBER MODE. Refer to parts catalog to order the ECU.

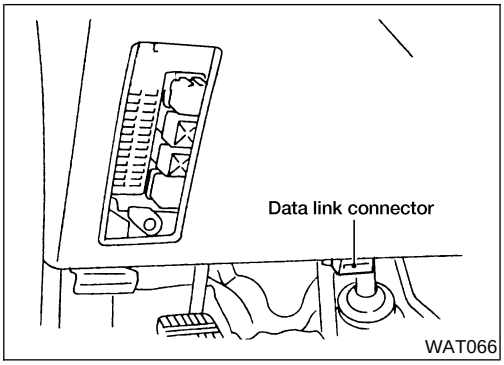

CONSULT-II Inspection Procedure

=NDBR0057

SELF-DIAGNOSIS PROCEDURE

NDBR0057S01

1. Turn ignition switch OFF.
2. Connect CONSULT-II to Data Link Connector.
3. Start engine.
4. Drive vehicle over 30 km/h (19 MPH) for at least one minute.

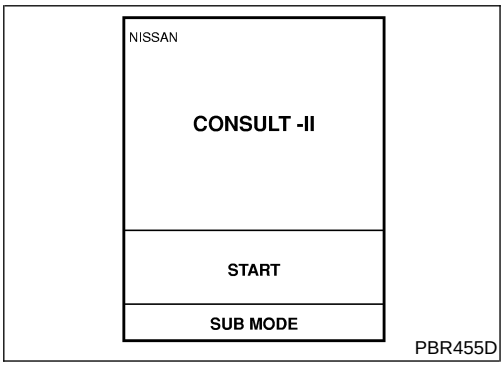

5. Stop vehicle with engine running and touch “START” on CONSULT-II screen.

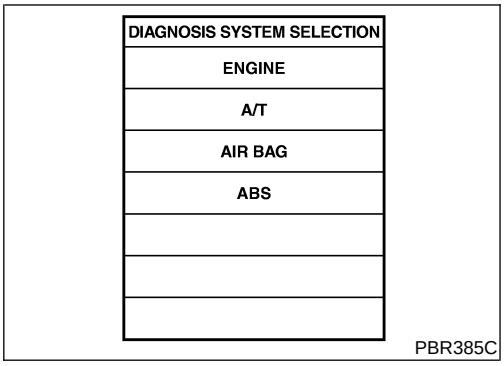

6. Touch “ABS”.

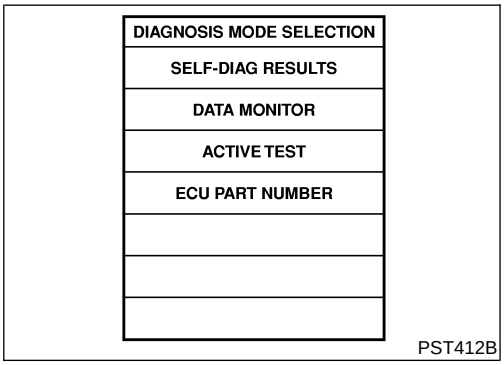

7. Touch “SELF-DIAG RESULTS”.

- The screen shows the detected malfunction and how many times the ignition switch has been turned ON since the malfunction.

8. Make the necessary repairs following the diagnostic procedures.

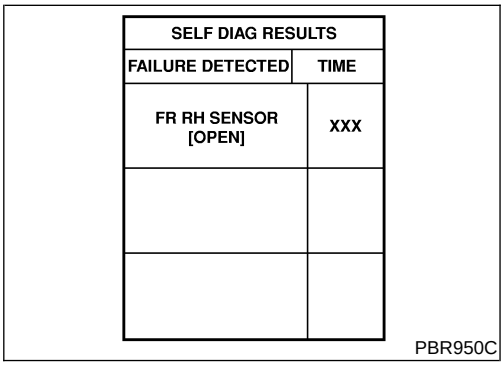

9. After the malfunctions are repaired, erase the self-diagnostic results stored in the control unit by touching “ERASE”.
10. Check warning lamp for deactivation after driving vehicle over 30 km/h (19 MPH) for at least one minute.
11. Test the ABS in a safe area to verify that it functions properly.

NOTE:
“SELF-DIAG RESULTS” screen shows the detected malfunction and how many times the ignition switch has been turned since the malfunction.

SELF-DIAGNOSTIC RESULTS MODE

NDBR0057S02

Diagnostic item	Diagnostic item is detected when ...	Reference Page
FR RH SENSOR★ [OPEN]	● Circuit for front right wheel sensor is open. (An abnormally high input voltage is entered.)	BR-53
FR LH SENSOR★ [OPEN]	● Circuit for front left wheel sensor is open. (An abnormally high input voltage is entered.)	BR-53
RR RH SENSOR★ [OPEN]	● Circuit for rear right sensor is open. (An abnormally high input voltage is entered.)	BR-53
RR LH SENSOR★ [OPEN]	● Circuit for rear left sensor is open. (An abnormally high input voltage is entered.)	BR-53
FR RH SENSOR★ [SHORT]	● Circuit for front right wheel sensor is shorted. (An abnormally low input voltage is entered.)	BR-53
FR LH SENSOR★ [SHORT]	● Circuit for front left wheel sensor is shorted. (An abnormally low input voltage is entered.)	BR-53
RR RH SENSOR★ [SHORT]	● Circuit for rear right sensor is shorted. (An abnormally low input voltage is entered.)	BR-53
RR LH SENSOR★ [SHORT]	● Circuit for rear left sensor is shorted. (An abnormally low input voltage is entered.)	BR-53
ABS SENSOR★ [ABNORMAL SIGNAL]	● Teeth damage on sensor rotor or improper installation of wheel sensor. (Abnormal wheel sensor signal is entered.)	BR-53
FR RH IN ABS SOL [OPEN, SHORT]	● Circuit for front right inlet solenoid valve is open. (An abnormally low output voltage is entered.)	BR-56
FR LH IN ABS SOL [OPEN, SHORT]	● Circuit for front left inlet solenoid valve is open. (An abnormally low output voltage is entered.)	BR-56
FR RH OUT ABS SOL [OPEN, SHORT]	● Circuit for front right outlet solenoid valve is open. (An abnormally low output voltage is entered.)	BR-56
FR LH OUT ABS SOL [OPEN, SHORT]	● Circuit for front left outlet solenoid valve is open. (An abnormally low output voltage is entered.)	BR-56
RR RH IN ABS SOL [OPEN, SHORT]	● Circuit for rear right inlet solenoid valve is shorted. (An abnormally high output voltage is entered.)	BR-56
RR LH IN ABS SOL [OPEN, SHORT]	● Circuit for rear left inlet solenoid valve is shorted. (An abnormally high output voltage is entered.)	BR-56
RR RH OUT ABS SOL [OPEN, SHORT]	● Circuit for rear right outlet solenoid valve is shorted. (An abnormally high output voltage is entered.)	BR-56
RR LH OUT ABS SOL [OPEN, SHORT]	● Circuit for rear left outlet solenoid valve is shorted. (An abnormally high output voltage is entered.)	BR-56
ABS ACTUATOR RELAY [ABNORMAL]	● Actuator solenoid valve relay is ON, even if control unit sends off signal. ● Actuator solenoid valve relay is OFF, even if control unit sends on signal.	BR-56
ABS MOTOR RELAY [ABNORMAL]	● Circuit for ABS motor relay is open or shorted. ● Circuit for actuator motor is open or shorted. ● Actuator motor relay is stuck.	BR-58
BATTERY VOLT [VB-LOW]	● Power source voltage supplied to ABS control unit is abnormally low.	BR-60
CONTROL UNIT	● Function of calculation in ABS control unit has failed.	BR-62

★: If one or more wheels spin on a rough or slippery road for 40 seconds or more, the ABS warning lamp will illuminate. This does not indicate a malfunction. Only in the case of the short-circuit (Code Nos. 26, 22, 32 and 36), after repair the ABS warning lamp also illuminates when the ignition switch is turned ON. In this case, drive the vehicle at speeds greater than 30 km/h (19 MPH) for approximately 1 minute as specified in "SELF-DIAGNOSIS PROCEDURE", BR-39. Check to ensure that the ABS warning lamp goes out while the vehicle is being driven.

DATA MONITOR PROCEDURE

NDBR0057S03

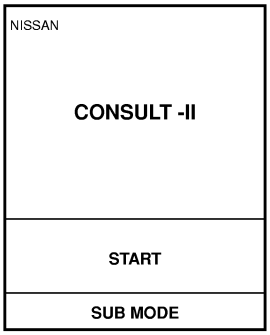

PBR455D

1. Turn ignition switch OFF.
2. Connect CONSULT-II to Data Link Connector.
3. Turn ignition switch ON.
4. Touch "START" on CONSULT-II screen.

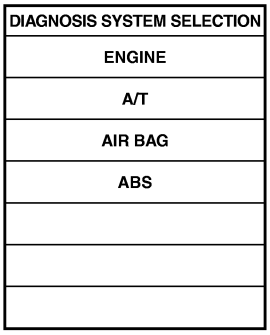

PBR385C

5. Touch "ABS".

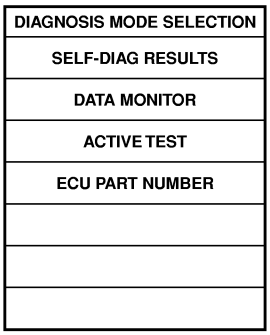

PST412B

6. Touch "DATA MONITOR".

ACTIVE TEST PROCEDURE

NDBR0057S04

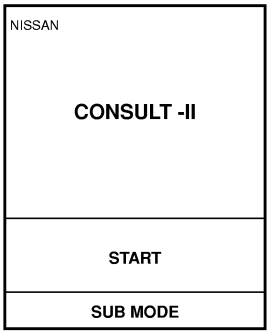

PBR455D

- When conducting Active test, vehicle must be stationary.
- When ABS warning lamp stays on, never conduct Active test.

1. Turn ignition switch OFF.
2. Connect CONSULT-II to Data Link Connector.
3. Start engine.
4. Touch "START" on CONSULT-II screen.

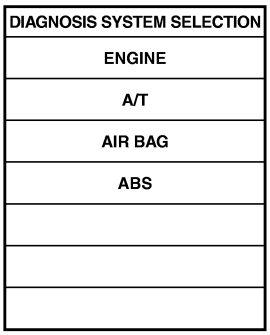

PBR385C

5. Touch "ABS".

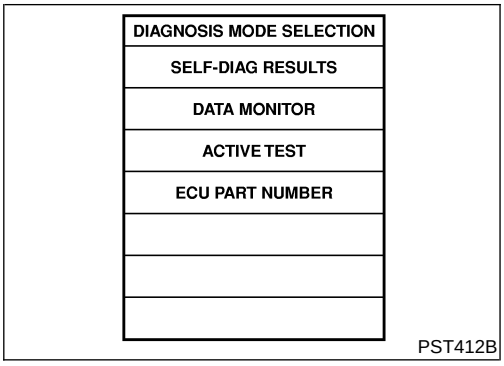

6. Touch "ACTIVE TEST".

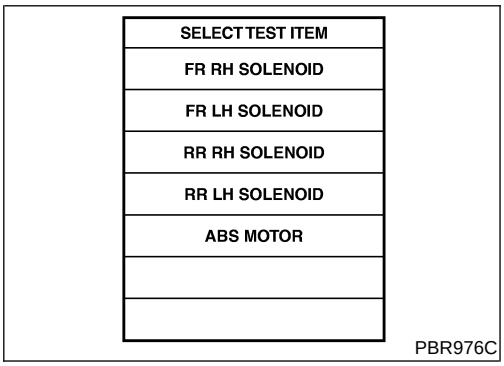

7. Select active test item by touching screen.

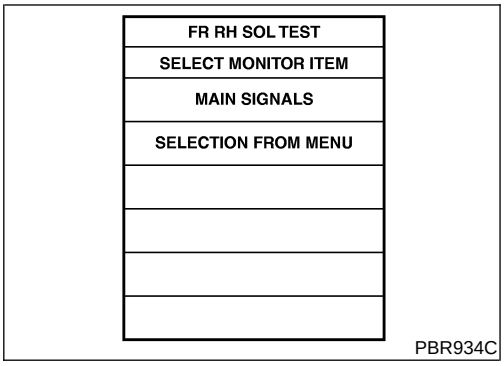

8. Touch "START".
9. Carry out the active test by touching screen key.

DATA MONITOR MODE

NDBR0057S05

MONITOR ITEM	CONDITION	SPECIFICATION
FR RH SENSOR FR LH SENSOR RR RH SENSOR RR LH SENSOR	Drive vehicle. (Each wheel is rotating.)	Wheel speed signal (Almost the same speed as speedometer.)
STOP LAMP SW	Brake is depressed.	Depress the pedal: ON Release the pedal: OFF
FR RH IN SOL FR RH OUT SOL FR LH IN SOL FR LH OUT SOL RR RH IN SOL RR RH OUT SOL RR LH IN SOL RR LH OUT SOL	1. Drive vehicle at speeds over 30 km/h (19 MPH) for at least 1 minute. 2. Engine is running.	Operating conditions for each solenoid valve are indicated. ABS is not operating: OFF
MOTOR RELAY		ABS is not operating: OFF ABS is operating: ON

MONITOR ITEM	CONDITION	SPECIFICATION
ACTUATOR RELAY	Ignition switch is ON or engine is running.	Ignition switch ON (Engine stops): OFF Engine running: ON
WARNING LAMP		ABS warning lamp is turned on: ON ABS warning lamp is turned off: OFF
BATTERY VOLT		Power supply voltage for control unit

ACTIVE TEST MODE

NDBR0057S06

TEST ITEM	CONDITION	JUDGEMENT		
FR RH SOLENOID FR LH SOLENOID RR RH SOLENOID RR LH SOLENOID	Engine is running.	Brake fluid pressure control operation		
			IN SOL	OUT SOL
		UP (Increase):	OFF	OFF
		KEEP (Hold):	ON	OFF
		DOWN (Decrease):	ON	ON
ABS MOTOR		ABS actuator motor ON: Motor runs (ABS motor relay ON) OFF: Motor stops (ABS motor relay OFF)		

NOTE:
Active test will automatically stop ten seconds after the test starts. (TEST IS STOPPED monitor shows ON.)

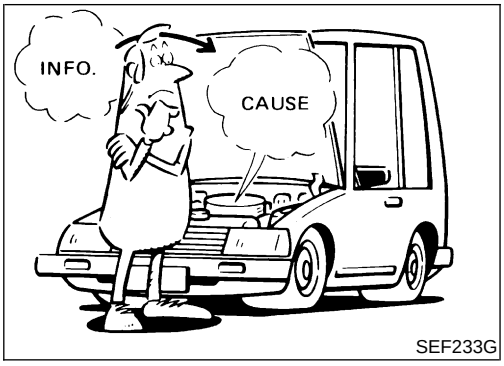

SEF233G

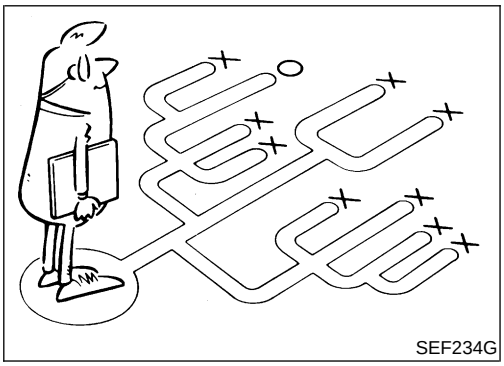
SEF234G

How to Perform Trouble Diagnoses for Quick and Accurate Repair

NDBR0058

INTRODUCTION

NDBR0058S01

The ABS system has an electronic control unit to control major functions. The control unit accepts input signals from sensors and instantly drives the actuators. It is essential that both kinds of signals are proper and stable. It is also important to check for conventional problems: such as air leaks in booster lines, lack of brake fluid, or other problems with the brake system.

It is much more difficult to diagnose a problem that occurs intermittently rather than continuously. Most intermittent problems are caused by poor electric connections or faulty wiring. In this case, careful checking of suspicious circuits may help prevent the replacement of good parts.

A visual check only may not find the cause of the problems, so a road test should be performed.

Before undertaking actual checks, take a few minutes to talk with a customer who approaches with an ABS complaint. The customer is a very good source of information on such problems; especially intermittent ones. By talking to the customer, find out what symptoms are present and under what conditions they occur. Start your diagnosis by looking for “conventional” problems first. This is one of the best ways to troubleshoot brake problems on an ABS controlled vehicle.

Also check related Service bulletins for information.

Preliminary Check

NDBR0059

1	CHECK BRAKE FLUID	
Check brake fluid for contamination.		
Has brake fluid been contaminated?		
Yes	▶	Replace. GO TO 2.
No	▶	GO TO 2.

2	CHECK BRAKE FLUID LEVEL	
Check brake fluid level in reservoir tank. Low fluid level may indicate brake pad wear or leakage from brake line.		
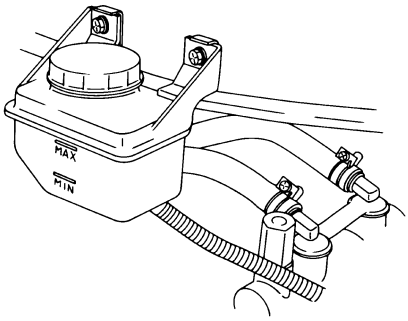 AMA013		
Is brake fluid filled between MAX and MIN lines on reservoir tank ?		
Yes	▶	GO TO 3.
No	▶	Fill up brake fluid. GO TO 3.

3	CHECK BRAKE LINE	
Check brake line for leakage.		
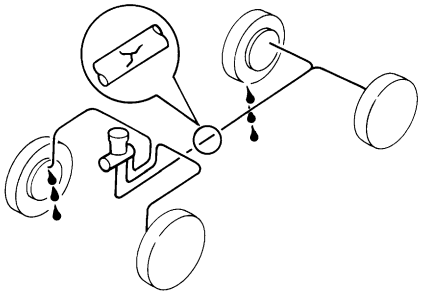 SBR389C		
Is leakage present at or around brake lines, tubes or hoses or are any of these parts cracked or damaged?		
Yes	▶	Repair. GO TO 4.
No	▶	GO TO 4.

4	CHECK BRAKE BOOSTER OPERATION	
Check brake booster for operation and air tightness. Refer to "On-vehicle Service", BR-18. 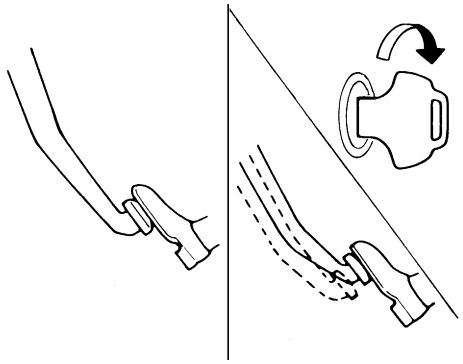 SBR058C **Is brake booster airtight and functioning properly?**		
Yes	▶	GO TO 5.
No	▶	Replace. GO TO 5.

5	CHECK BRAKE PAD AND ROTOR	
Check brake pad and rotor. Refer to ("Pad Replacement", BR-22, "ROTOR", BR-24). 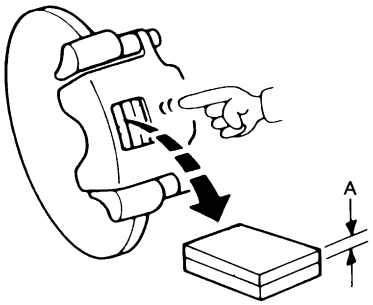 SBR059C **Are brake pads and rotors functioning properly?**		
Yes	▶	GO TO 6.
No	▶	Replace.

6	RECHECK BRAKE FLUID LEVEL	
Check brake fluid level in reservoir tank again.		

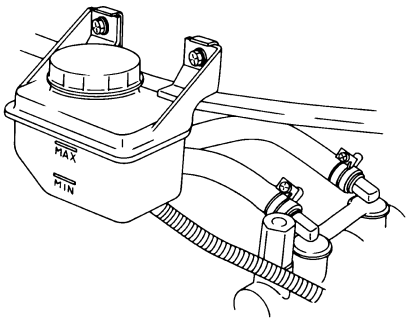

AMA013

Is brake fluid filled between MAX and MIN lines on reservoir tank ?

Yes	▶	GO TO 7.
No	▶	Fill up brake fluid.

7	CHECK WARNING LAMP ACTIVATION	
Check warning lamp activation.		

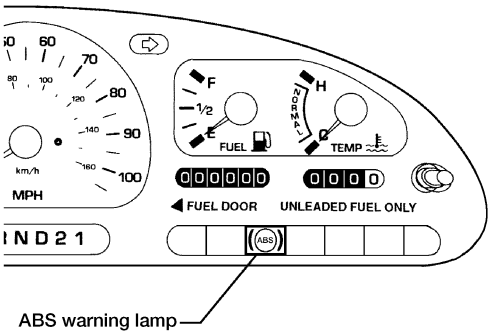

ABR306

Does warning lamp turn on when ignition switch is turned ON?

Yes	▶	GO TO 8.
No	▶	Check fuse, warning lamp bulb and warning lamp circuit.

8	CHECK WARNING LAMP DEACTIVATION	
Check warning lamp for deactivation after engine is started.		

Does warning lamp turn off when engine is started?

Yes	▶	GO TO 9.
No	▶	Refer to "SELF-DIAGNOSIS PROCEDURE", BR-39, "SELF-DIAGNOSIS PROCEDURE", 42.

9	DRIVE VEHICLE	
Drive vehicle at speeds over 30 km/h (19 MPH) for at least one minute.		

Does warning lamp remain off after vehicle has been driven at 30 km/h (19 MPH) for at least one minute?

Yes	▶	**INSPECTION END**
No	▶	Refer to "SELF-DIAGNOSIS PROCEDURE", BR-39, "SELF-DIAGNOSIS PROCEDURE", 42.

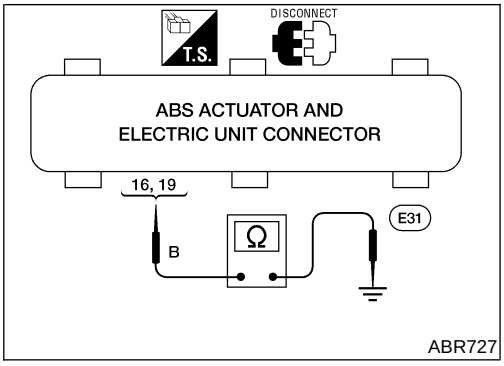

Ground Circuit Check

=NDBR0060

ABS ACTUATOR AND ELECTRIC UNIT GROUND

NDBR0060S01

- Check resistance between ABS actuator and electric unit connector terminals and ground.

  Resistance: approximately 0Ω

Malfunction Code/Symptom Chart

NDBR0061

Code No. (No. of warning lamp flashes)	Malfunctioning part	Reference Page
12	Self-diagnosis could not detect any malfunctions.	—
45	Actuator front left outlet solenoid valve	BR-56
46	Actuator front left inlet solenoid valve	BR-56
41	Actuator front right outlet solenoid valve	BR-56
42	Actuator front right inlet solenoid valve	BR-56
51	Actuator rear right outlet solenoid valve	BR-56
52	Actuator rear right inlet solenoid valve	BR-56
55	Actuator rear left outlet solenoid valve	BR-56
56	Actuator rear left inlet solenoid valve	BR-56
25 ★1	Front left sensor (open-circuit)	BR-53
26 ★1	Front left sensor (short-circuit)	BR-53
21 ★1	Front right sensor (open-circuit)	BR-53
22 ★1	Front right sensor (short-circuit)	BR-53
31 ★1	Rear right sensor (open-circuit)	BR-53
32 ★1	Rear right sensor (short-circuit)	BR-53
35 ★1	Rear left sensor (open-circuit)	BR-53
36 ★1	Rear left sensor (short-circuit)	BR-53
18 ★1	Sensor rotor	BR-53
61 ★3	Actuator motor or motor relay	BR-58
63	Solenoid valve relay	BR-56
57 ★2	Power supply (Low voltage)	BR-60
71	Control unit	BR-62
Warning lamp stays on when ignition switch is turned ON.	Control unit power supply circuit Warning lamp bulb circuit Control unit or control unit connector Solenoid valve relay stuck Power supply for solenoid valve relay coil	BR-69
Warning lamp does not come on when ignition switch is turned ON.	Fuse, warning lamp bulb or warning lamp circuit Control unit	BR-67
Pedal vibration and noise	—	BR-66
Long stopping distance	—	BR-64
Unexpected pedal action	—	BR-63
ABS does not work	—	BR-66
ABS works frequently	—	BR-63

★1: If one or more wheels spin on a rough or slippery road for 40 seconds or more, the ABS warning lamp will illuminate. This does not indicate a malfunction. Only in the case of the short-circuit (Code Nos. 26, 22, 32 and 36), after repair the ABS warning lamp also illuminates when the ignition switch is turned ON. In this case, drive the vehicle at speeds greater than 30 km/h (19 MPH) for approximately 1 minute as specified in “SELF-DIAGNOSIS PROCEDURE”, BR-39. Check to ensure that the ABS warning lamp goes out while the vehicle is being driven.

★2: The trouble code “57”, which refers to a low power supply voltage, does not indicate that the ABS control unit is malfunctioning. Do not replace the ABS control unit with a new one.

★3: The trouble code “61” can sometimes appear when the ABS motor is not properly grounded. If it appears, be sure to check the condition of the ABS motor ground circuit connection.

Wheel Sensor or Rotor

DIAGNOSTIC PROCEDURE

NDBR0086

Malfunction code No. 21, 22, 25, 26, 31, 32, 35, 36 or 18

NOTE:
Wheel position should be distinguished by code No. except code No. 18 (sensor rotor).

1	INSPECTION START
Wheel sensor inspection	

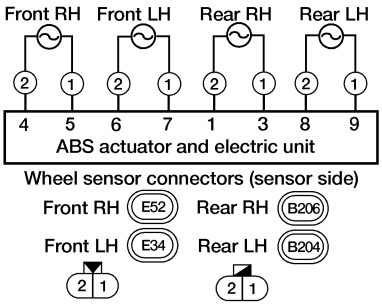

ABR728

	▶	GO TO 2.

2	CHECK CONNECTOR
1. Disconnect connectors from ABS actuator and electric unit and wheel sensor of malfunction code No. Check terminals for damage or loose connection. Then reconnect connectors. 2. Carry out self-diagnosis again.	
Does warning lamp activate again?	
Yes ▶	GO TO 3.
No ▶	**INSPECTION END**

3	CHECK WHEEL SENSOR ELECTRICAL

1. Disconnect ABS actuator and electric unit connector.
2. Check resistance between ABS actuator and electric unit connector E31 (body side) terminals.
   Code No. 21 or 22 (Front RH wheel)
   Terminals 4 and 5
   Code No. 25 or 26 (Front LH wheel)
   Terminals 6 and 7
   Code No. 31 or 32 (Rear RH wheel)
   Terminals 1 and 3
   Code No. 35 or 36 (Rear LH wheel)
   Terminals 8 and 9

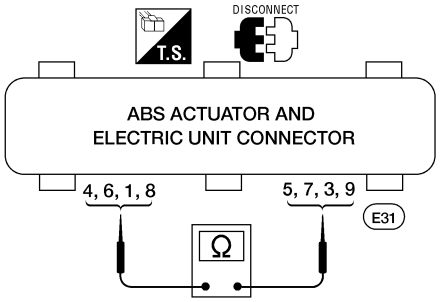

ABR729

Resistance:
Front 1.44 - 1.76 kΩ
Rear 1.44 - 1.76 kΩ

Is front resistance 1.44 - 1.76 kΩ and rear resistance 1.44 - 1.76 kΩ?

Yes	▶	GO TO 5.
No	▶	GO TO 4.

4	CHECK WHEEL SENSOR

Check each sensor for resistance.

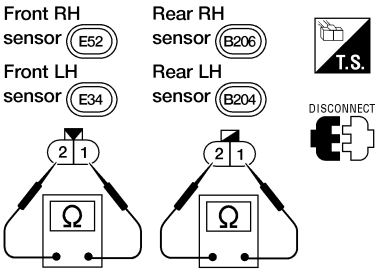

ABR730

Resistance:
Front 1.44 - 1.76 kΩ
Rear 1.44 - 1.76 kΩ

Is front resistance 1.44 - 1.76 kΩ and rear resistance 1.44 - 1.76 kΩ?

Yes	▶	**Check the following.** If NG, repair harness or connectors. ● Harness connectors E31, E34, E52, B204, B206 ● Harness for open or short between wheel sensor connectors and ABS actuator and electric unit
No	▶	Replace wheel sensor.

5	CHECK TIRE	
Check for inflation pressure, wear and size of each tire. (See NOTE) **Are tire pressure and size correct and is tire wear within specifications?**		
Yes	▶	GO TO 6.
No	▶	Adjust tire pressure or replace tire(s). (See NOTE)

6	CHECK WHEEL BEARING	
Check wheel bearing axial end play. (See NOTE) **Is wheel bearing axial end play within specifications? Refer to "FRONT WHEEL BEARING", *AX-4*, "REAR WHEEL HUB BEARING", *AX-18* .**		
Yes	▶	GO TO 7.
No	▶	Check wheel bearing. Refer to "FRONT WHEEL BEARING", ***AX-4***, "REAR WHEEL HUB BEARING", ***AX-18*** .

7	CHECK SENSOR ROTOR	
Check sensor rotor for teeth damage. (See NOTE) **Is sensor rotor free from damage?**		
Yes	▶	Check ABS actuator and electric unit pin terminals for damage or the connection of ABS actuator and electric unit harness connector. Reconnect ABS actuator and electric unit harness connector. Then retest.
No	▶	Replace sensor rotor. (See NOTE)

ABS Actuator Solenoid Valve and Solenoid Valve Relay

DIAGNOSTIC PROCEDURE

=NDBR0087

Malfunction code No. 41, 45, 51, 55, 42, 46, 52, 56, 63

1	INSPECTION START

Solenoid valve relay inspection

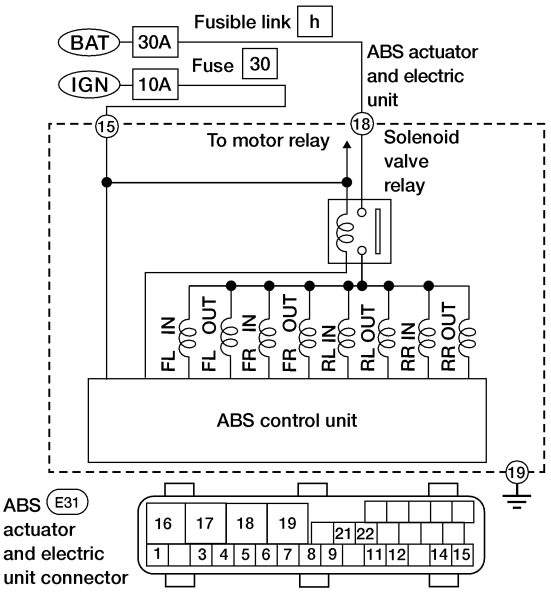

WBR015

▶	GO TO 2.

2	CHECK FUSE

Check 30A fusible link h. For fuse layout, refer to “Schematic”, ***EL-10***.

Is fusible link OK?

Yes	▶	GO TO 3.
No	▶	GO TO 6.

3	CHECK CONNECTOR

1. Disconnect connector from ABS actuator and electric unit. Check terminals for damage or loose connection. Then reconnect connector.
2. Carry out self-diagnosis again.

Does warning lamp activate again?

Yes	▶	GO TO 4.
No	▶	**INSPECTION END**

4	CHECK ABS ACTUATOR AND ELECTRIC UNIT GROUND CIRCUIT

Refer to “ABS ACTUATOR AND ELECTRIC UNIT GROUND”, BR-51.

Is ground circuit OK?

Yes	▶	GO TO 5.
No	▶	Repair harness or connector.

5	CHECK SOLENOID VALVE POWER SUPPLY CIRCUIT

1. Disconnect ABS actuator and electric unit connector.
2. Check voltage between ABS actuator and electric unit connector E31 (body side) terminal 18 and ground.

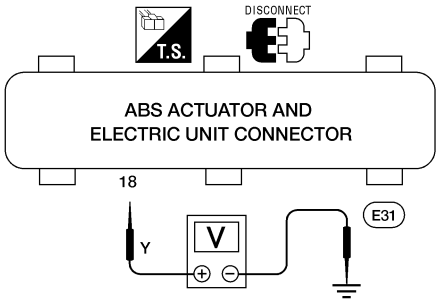

ABR732

Does battery voltage exist?

Yes	▶	Replace ABS actuator and electric unit.
No	▶	**Check the following.** If NG, repair harness or connectors. ● Harness connector E31 ● Harness for open or short between ABS actuator and electric unit and fusible link.

6	REPLACE FUSE

Replace fuse.

Does the fuse blow out when ignition switch is turned ON?

Yes	▶	GO TO 7.
No	▶	**INSPECTION END**

7	CHECK SOLENOID VALVE RELAY POWER SUPPLY CIRCUIT FOR SHORT

1. Disconnect battery cable and ABS actuator and electric unit connector.
2. Check continuity between ABS actuator and electric unit connector E31 (body side) terminal 18 and ground.

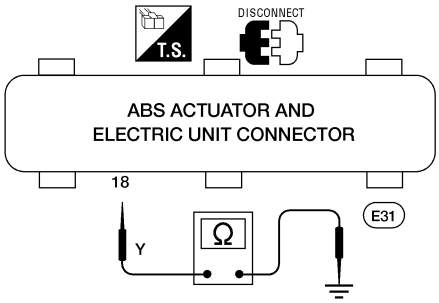

ABR733

Continuity should not exist.

Does continuity exist?

Yes	▶	**Check the following.** If NG, repair harness or connector. ● Harness connector E31 ● Harness for open or short between ABS actuator and electric unit and fusible link.
No	▶	Replace ABS actuator and electric unit.

Motor Relay or Motor

DIAGNOSTIC PROCEDURE

=NDBR0088

Malfunction code No. 61

1	INSPECTION START

ABS motor relay inspection

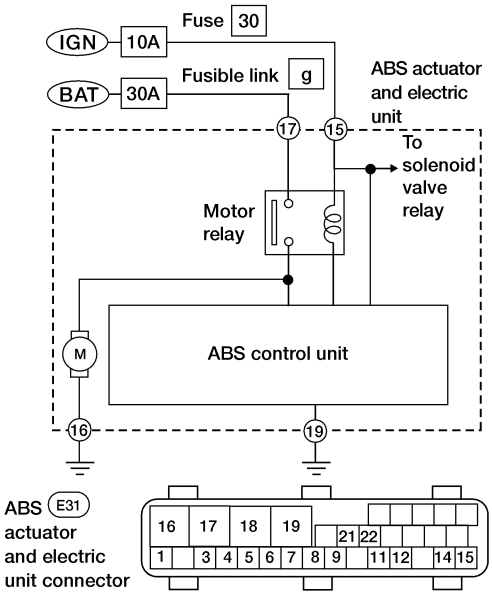

WBR016

▶	GO TO 2.

2	CHECK FUSIBLE LINK

Check 30A fusible link **g**. For fusible link layout, refer to “Schematic”, ***EL-10***.

Is fusible link OK?

Yes	▶	GO TO 3.
No	▶	GO TO 6.

3	CHECK CONNECTOR

1. Disconnect ABS actuator and electric unit connector. Check terminals for damage or loose connection. Then reconnect connector.
2. Carry out self-diagnosis again.

Does warning lamp activate again?

Yes	▶	GO TO 4.
No	▶	**INSPECTION END**

4	CHECK ABS ACTUATOR AND ELECTRIC UNIT GROUND CIRCUIT

Refer to “ABS ACTUATOR AND ELECTRIC UNIT GROUND”, BR-51.

Is ground circuit OK?

Yes	▶	GO TO 5.
No	▶	Repair harness or connector.

5	CHECK MOTOR RELAY POWER SUPPLY CIRCUIT

1. Disconnect ABS actuator and electric unit connector.
2. Check voltage between ABS actuator and electric unit connector E31 (body side) terminal 17 and ground.

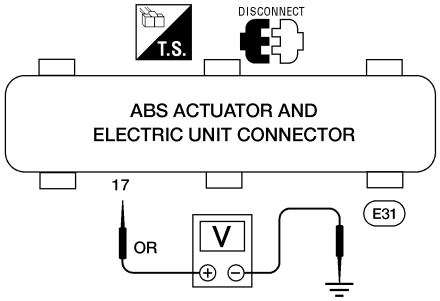

ABR735

Does battery voltage exist?

Yes	▶	Replace ABS actuator and electric unit.
No	▶	**Check the following.** If NG, repair harness or connector. ● Harness connector E31 ● Harness for open or short between ABS actuator and electric unit and fusible link

6	REPLACE FUSIBLE LINK

Replace fusible link.

Does the fusible link blow out when ignition switch is turned ON?

Yes	▶	GO TO 7.
No	▶	**INSPECTION END**

7	CHECK ABS ACTUATOR MOTOR POWER SUPPLY CIRCUIT FOR SHORT

1. Disconnect battery cable and ABS actuator and electric unit connector.
2. Check continuity between ABS actuator and electric unit connector E31 (body side) terminal 17 and ground.

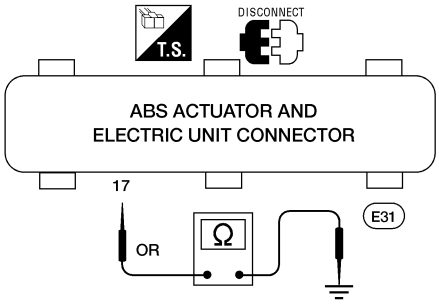

ABR736

Continuity should not exist.

Does continuity exist?

Yes	▶	**Check the following.** If NG, repair harness or connector. ● Harness connector E31 ● Harness for open or short between ABS actuator and electric unit and fusible link
No	▶	Replace ABS actuator and electric unit.

Low Voltage

DIAGNOSTIC PROCEDURE

NDBR0089

Malfunction code No. 57

1	INSPECTION START
ABS actuator and electric unit power supply and ground circuit inspection	

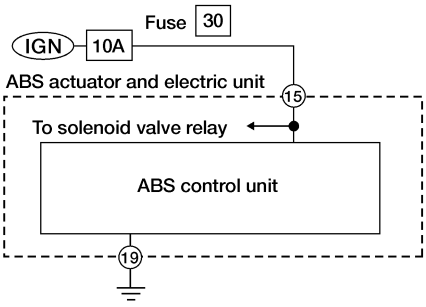

ABR737

▶	GO TO 2.

2	CHECK FUSE
Check 10A fuse No. 30. For fuse layout, refer to"Schematic", ***EL-10***.	
Is fuse OK?	
Yes ▶	GO TO 3.
No ▶	GO TO 6.

3	CHECK CONNECTOR
1. Disconnect ABS actuator and electric unit connector. Check terminals for damage or loose connections. Then reconnect connector. 2. Carry out self-diagnosis again.	
Does warning lamp activate again?	
Yes ▶	GO TO 4.
No ▶	**INSPECTION END**

4	CHECK ABS ACTUATOR AND ELECTRIC UNIT GROUND CIRCUIT
Refer to “ABS ACTUATOR AND ELECTRIC UNIT GROUND”, BR-51.	
Is ground circuit OK?	
Yes ▶	GO TO 5.
No ▶	Repair harness or connector.

5	CHECK ABS ACTUATOR AND ELECTRIC UNIT POWER SUPPLY CIRCUIT

1. Disconnect ABS actuator and electric unit connector.
2. Check voltage between ABS actuator and electric unit connector E31 (body side) terminal 15 and ground.

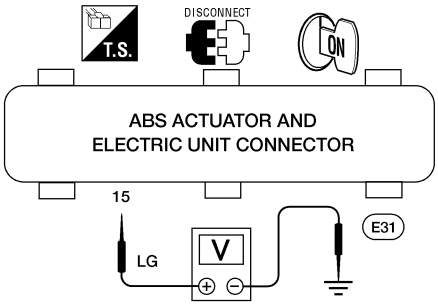

ABR738

Does battery voltage exist when ignition switch is turned ON?

Yes	▶	Replace ABS actuator and electric unit.
No	▶	**Check the following.** If NG, repair harness or connector. ● Harness connector E31 ● Harness for open or short between ABS actuator and electric unit and fuse

6	REPLACE FUSE

Replace fuse.

Does the fuse blow out when ignition switch is turned ON?

Yes	▶	GO TO 7.
No	▶	**INSPECTION END**

7	CHECK ABS ACTUATOR AND ELECTRIC UNIT POWER SUPPLY CIRCUIT FOR SHORT

1. Disconnect battery cable and ABS actuator and electric unit connector.
2. Check continuity between ABS actuator and electric unit connector E31 (body side) terminal 15 and ground.

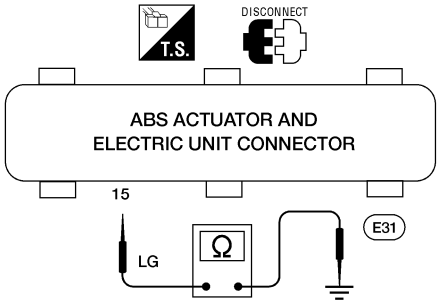

ABR739

Continuity should not exist.

Does continuity exist?

Yes	▶	**Check the following.** If NG, repair harness or connector. ● Harness connector E31 ● Harness for open or short between ABS actuator and electric unit and fuse
No	▶	Replace ABS actuator and electric unit.

Control Unit

DIAGNOSTIC PROCEDURE

=NDBR0091

Malfunction code No. 71

1	INSPECTION START
ABS actuator and electric unit power supply and ground circuit inspection	

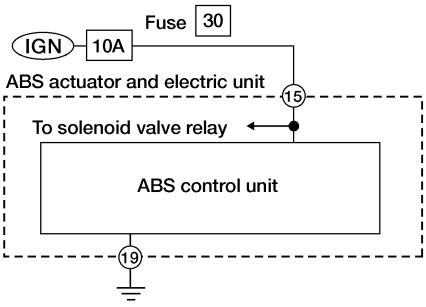

ABR737

	▶	GO TO 2.

2	CHECK CONNECTOR	
1. Disconnect ABS actuator and electric unit connector. Check terminals for damage or loose connection. Then reconnect connector. 2. Carry out self-diagnosis again.		
Does warning lamp activate again?		
Yes	▶	GO TO 3.
No	▶	**INSPECTION END**

3	CHECK ABS ACTUATOR AND ELECTRIC UNIT POWER SUPPLY CIRCUIT	
Check voltage. Refer to test group 5, “CHECK ABS ACTUATOR AND ELECTRIC UNIT POWER SUPPLY CIRCUIT” in “DIAGNOSTIC PROCEDURE”, “Low Voltage”, BR-61.		
Does battery voltage exist when ignition switch is turned ON?		
Yes	▶	GO TO 4.
No	▶	Repair.

4	CHECK WARNING LAMP INDICATION	
Does warning lamp indicate code No. 71 again?		
Yes or No		
Yes	▶	Replace ABS actuator and electric unit.
No	▶	Inspect the system according to the code No.

1. ABS Works Frequently

NDBR0070

1	CHECK BRAKE FLUID PRESSURE	
Check brake fluid pressure distribution. Refer to “Inspection”, BR-10.		
Is brake fluid pressure distribution normal?		
Yes	▶	GO TO 2.
No	▶	Repair. Then perform Preliminary Check. Refer to “Preliminary Check”, BR-48.

2	CHECK WHEEL SENSOR	
1. Check wheel sensor connector for terminal damage or loose connections. 2. Perform wheel sensor mechanical check. Refer to test group 7, “ CHECK SENSOR ROTOR” in “DIAGNOSTIC PROCEDURE”, “Wheel Sensor or Rotor”, BR-55.		
Is wheel sensor mechanism OK?		
Yes	▶	GO TO 3.
No	▶	Repair.

3	CHECK FRONT AXLE	
Check front axles for excessive looseness. Refer to “Front Wheel Bearing”, ***AX-4***.		
Is front axle installed properly?		
Yes	▶	Go to test group 3, “CHECK WARNING LAMP INDICATION” in “2. Unexpected Pedal Action”, BR-64.
No	▶	Repair.

2. Unexpected Pedal Action

NDBR0071

1	CHECK BRAKE PEDAL STROKE	
Check brake pedal stroke.		
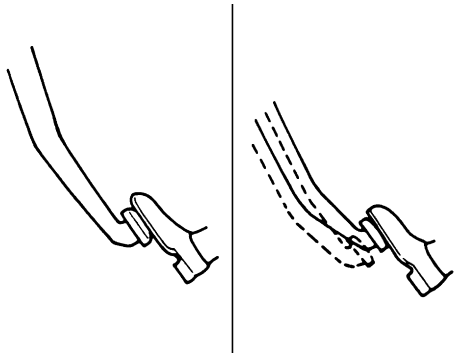 SBR540A		
Is brake pedal stroke excessively large?		
Yes	▶	Perform Preliminary Check. Refer to “Preliminary Check”, BR-48.
No	▶	GO TO 2.

2	CHECK MECHANICAL BRAKE SYSTEM PERFORMANCE	
Disconnect ABS actuator and electric unit connector and check whether brake is effective. **Does brake system function properly when brake pedal is depressed?**		
Yes	▶	GO TO 3.
No	▶	Perform Preliminary Check. Refer to "Preliminary Check", BR-48.

3	CHECK WARNING LAMP INDICATION	
Ensure warning lamp remains off while driving. 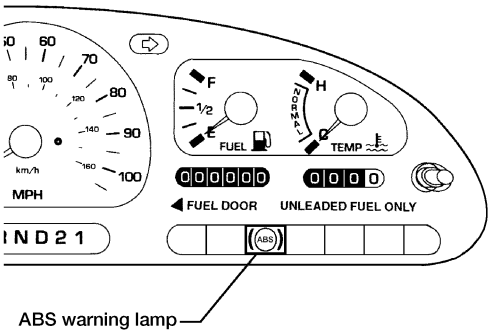 ABR306 **Is warning lamp turned off?**		
Yes	▶	GO TO 4.
No	▶	Carry out self-diagnosis. Refer to BR-39, BR-42.

4	CHECK WHEEL SENSOR	
1. Check wheel sensor connector for terminal damage or loose connection. 2. Perform wheel sensor mechanical check. Refer to test group 7 "CHECK SENSOR ROTOR" in "DIAGNOSTIC PROCEDURE", "Wheel Sensor or Rotor", BR-55. **Is wheel sensor mechanism OK?**		
Yes	▶	Check ABS actuator and electric unit pin terminals for damage or the connection of ABS actuator and electric unit harness connector. Reconnect ABS actuator and electric unit harness connector. Then retest.
No	▶	Repair.

3. Long Stopping Distance

NDBR0072

1	CHECK MECHANICAL BRAKE SYSTEM PERFORMANCE	
Disconnect ABS actuator and electric unit connector and check whether stopping distance is still long. **Does brake system function properly when brake pedal is depressed?**		
Yes	▶	Perform Preliminary Check and air bleeding (if necessary).
No	▶	Go to test group 3 "CHECK WARNING LAMP INDICATION" in "2. Unexpected Pedal Action", BR-64.

NOTE:
Stopping distance may be longer for vehicles without ABS when road condition is slippery.

4. ABS Does Not Work

=NDBR0073

1	CHECK WARNING LAMP INDICATION	
Does the ABS warning lamp activate?		
	Yes or No	
Yes	▶	Carry out self-diagnosis. Refer to “SELF-DIAGNOSIS PROCEDURE”, BR-39, “SELF-DIAGNOSIS PROCEDURE”, 42.
No	▶	Go to test group 3 “CHECK WARNING LAMP INDICATION” in “2. Unexpected Pedal Action”, BR-64.

NOTE:
ABS does not work when vehicle speed is under 10 km/h (6 MPH).

5. Pedal Vibration and Noise

NDBR0074

1	INSPECTION START	
Pedal vibration and noise inspection		
	▶	GO TO 2.

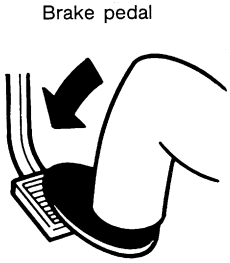

SAT797A

2	CHECK SYMPTOM	
1. Apply brake. 2. Start engine.		
	Does the symptom appear only when engine is started?	
Yes	▶	Carry out self-diagnosis. Refer to “SELF-DIAGNOSIS PROCEDURE”, BR-39, “SELF-DIAGNOSIS PROCEDURE”, 42.
No	▶	Go to test group 3 “ CHECK WARNING LAMP INDICATION” in “2. Unexpected Pedal Action”, BR-64.

NOTE:
ABS may operate and cause vibration under any of the following conditions.

- Applying brake gradually when shifting or operating clutch.
- Low friction (slippery) road.
- High speed cornering.

- Driving over bumps and pot holes.
- Engine speed is over 5,000 rpm with vehicle stopped.

6. Warning Lamp Does Not Come On When Ignition Switch Is Turned On

NDBR0075

1	INSPECTION START
Warning lamp circuit inspection	

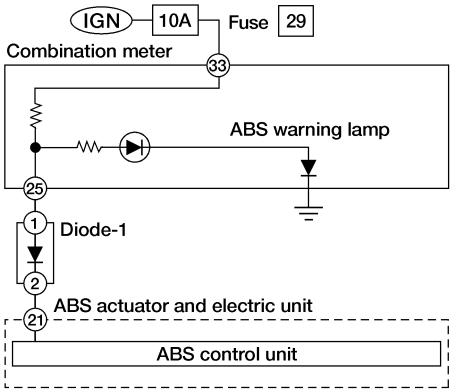

ABR740

▶	GO TO 2.

2	CHECK FUSE
Check 10A fuse No. 29. For fuse layout, refer to "Schematic", ***EL-10***.	
Is fuse OK?	
Yes ▶	GO TO 3.
No ▶	Replace fuse.

3	CHECK WARNING LAMP ACTIVATE

Disconnect ABS actuator and electric unit connector.

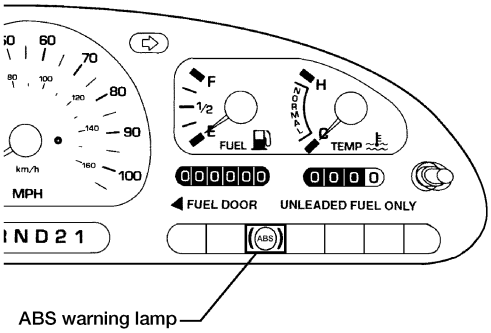

ABR306

Does the warning lamp activate?

Yes	▶	Replace ABS actuator and electric unit.
No	▶	GO TO 4.

4	CHECK HARNESS FOR SHORT

1. Disconnect ABS actuator and electric unit connector and combination meter connector M17.
2. Check continuity between ABS actuator and electric unit connector E31 (body side) terminal 21 and ground.

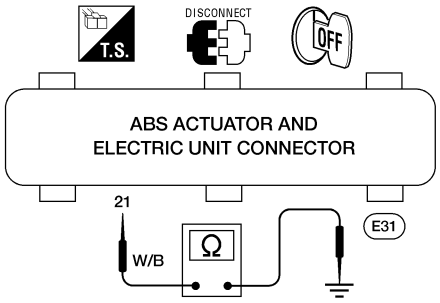

ABR741

Continuity should not exist.

Does continuity exist?

Yes	▶	Repair harness or connectors.
No	▶	**Check combination meter.** Refer to "System Description", ***EL-92***.

7. Warning Lamp Stays On When Ignition Switch Is Turned On

=NDBR0076

1	INSPECTION START
ABS control unit inspection	

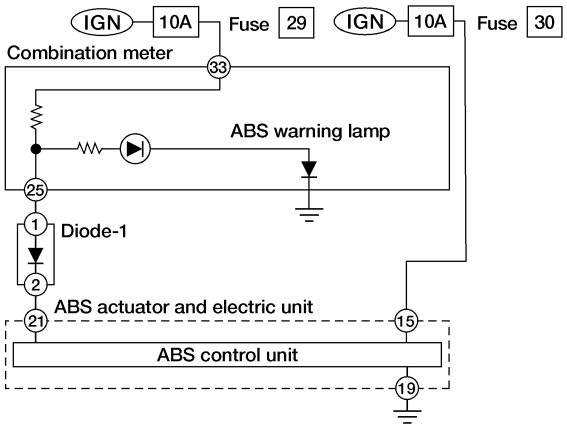

ABR807

	▶	GO TO 2.

2	CHECK FUSE	
Check 10A fuse No. 30. For fuse layout, refer to “Schematic”, ***EL-10***.		
Is fuse OK?		
Yes	▶	GO TO 3.
No	▶	GO TO 10.

3	CHECK HARNESS CONNECTOR	
Check ABS actuator and electric unit pin terminals for damage or bad connection of ABS actuator and electric unit harness connector. Reconnect ABS actuator and electric unit harness connector. Then retest.		
Does warning lamp stay on when ignition switch is turned ON?		
Yes	▶	GO TO 4.
No	▶	**INSPECTION END**

4	CHECK ABS ACTUATOR AND ELECTRIC UNIT GROUND CIRCUIT	
Refer to “ABS ACTUATOR AND ELECTRIC UNIT GROUND”, BR-51.		
Is ground circuit OK?		
Yes	▶	GO TO 5.
No	▶	Repair harness or connector.

5	CHECK ABS ACTUATOR AND ELECTRIC UNIT POWER SUPPLY CIRCUIT

1. Disconnect ABS actuator and electric unit connector.
2. Check voltage between ABS actuator and electric unit connector E31 (body side) terminal 15 and ground.

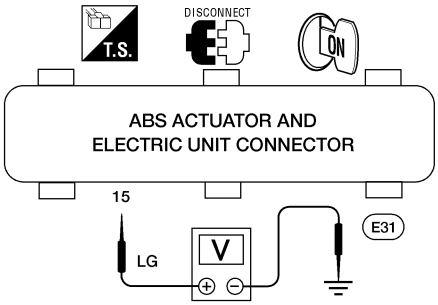

ABR738

Does battery voltage exist when ignition switch is turned ON?

Yes	▶	GO TO 6.
No	▶	**Check the following.** If NG, repair harness or connector. ● Harness connector E31 ● Harness for open or short between ABS actuator and electric unit and fuse

6	CHECK WARNING LAMP

1. Disconnect ABS actuator and electric unit connector.
2. Connect suitable wire between ABS actuator and electric unit connector E31 (body side) terminal 21 and ground.

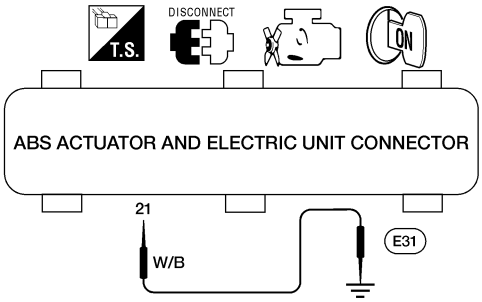

ABR742

Does the warning lamp deactivate?

Yes	▶	Replace ABS actuator and electric unit.
No	▶	GO TO 7.

7	CHECK ABS WARNING LAMP CONTROL CIRCUIT FOR OPEN

1. Disconnect combination meter connector M17.
2. Check continuity between combination meter connector M17 (body side) terminal 25 and ABS actuator and electric unit connector E31 (body side) terminal 21.
   NOTE:
   Connect positive lead of multimeter to combination meter connector M17 (body side) terminal 25 and negative lead to ABS actuator and electric unit connector E31 (body side) terminal 21.

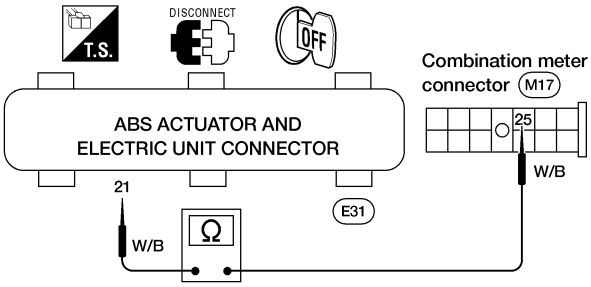

ABR795

Continuity should exist.

Does continuity exist?

Yes	▶	**Check combination meter.** Refer to "System Description", ***EL-92***.
No	▶	GO TO 8.

8	CHECK CIRCUIT CONTINUITY

1. Remove diode from diode-1 connector.
2. Check continuity between combination meter connector M17 (body side) terminal 25 and diode-1 connector (body side) terminal 1.

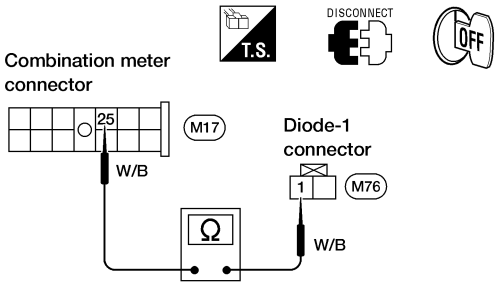

ABR796

Continuity should exist.

Does continuity exist?

Yes	▶	GO TO 9.
No	▶	Repair harness or connectors.

9	CHECK CIRCUIT CONTINUITY

Check continuity between diode-1 connector (body side) terminal 2 and ABS actuator and electric unit connector E31 (body side) terminal 21.

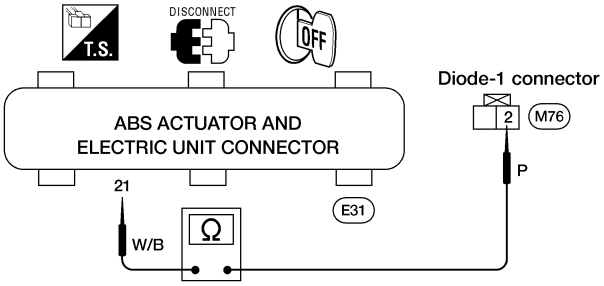

ABR797

Continuity should exist.

Does continuity exist?

Yes	▶	Replace diode-1.
No	▶	Repair harness or connectors.

10	REPLACE FUSE

Replace fuse.

Does the fuse blow out when ignition switch is turned ON?

Yes	▶	GO TO 11.
No	▶	**INSPECTION END**

11	CHECK ABS ACTUATOR AND ELECTRIC UNIT POWER SUPPLY CIRCUIT FOR SHORT

1. Disconnect battery cable and ABS actuator and electric unit connector.
2. Check continuity between ABS actuator and electric unit connector E31 (body side) terminal 15 and ground.

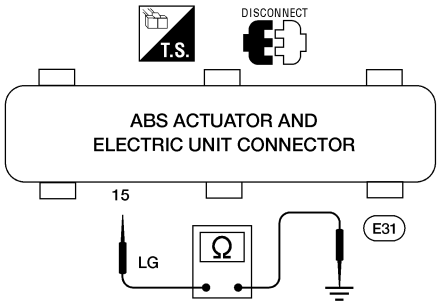

ABR739

Continuity should not exist.

Does continuity exist?

Yes	▶	**Check the following.** If NG, repair harness or connector. ● Harness connector E31 ● Harness for open or short between ABS actuator and electric unit and fuse
No	▶	Replace ABS actuator and electric unit.

REMOVAL AND INSTALLATION

CAUTION:
Be careful not to damage sensor edge and sensor rotor teeth. When removing the front or rear wheel hub assembly, disconnect the ABS wheel sensor from the assembly and move it away.

Front Wheel Sensor

NDBR0078S01

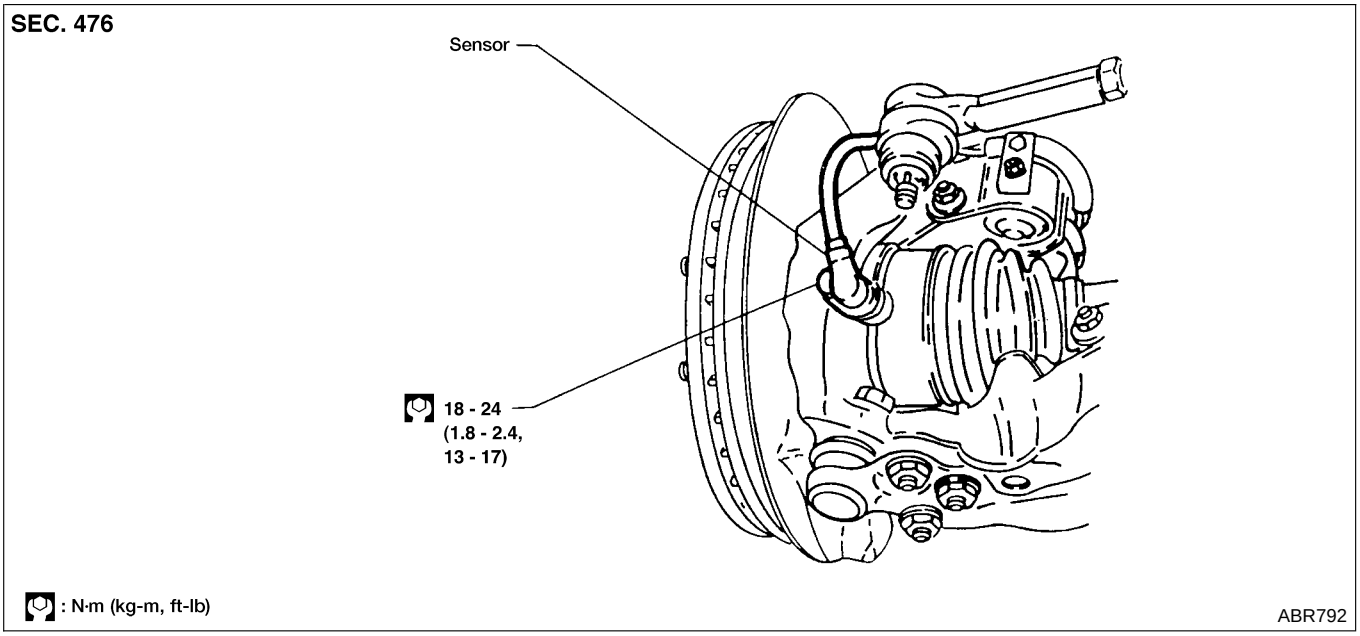

Rear Wheel Sensor

NDBR0078S02

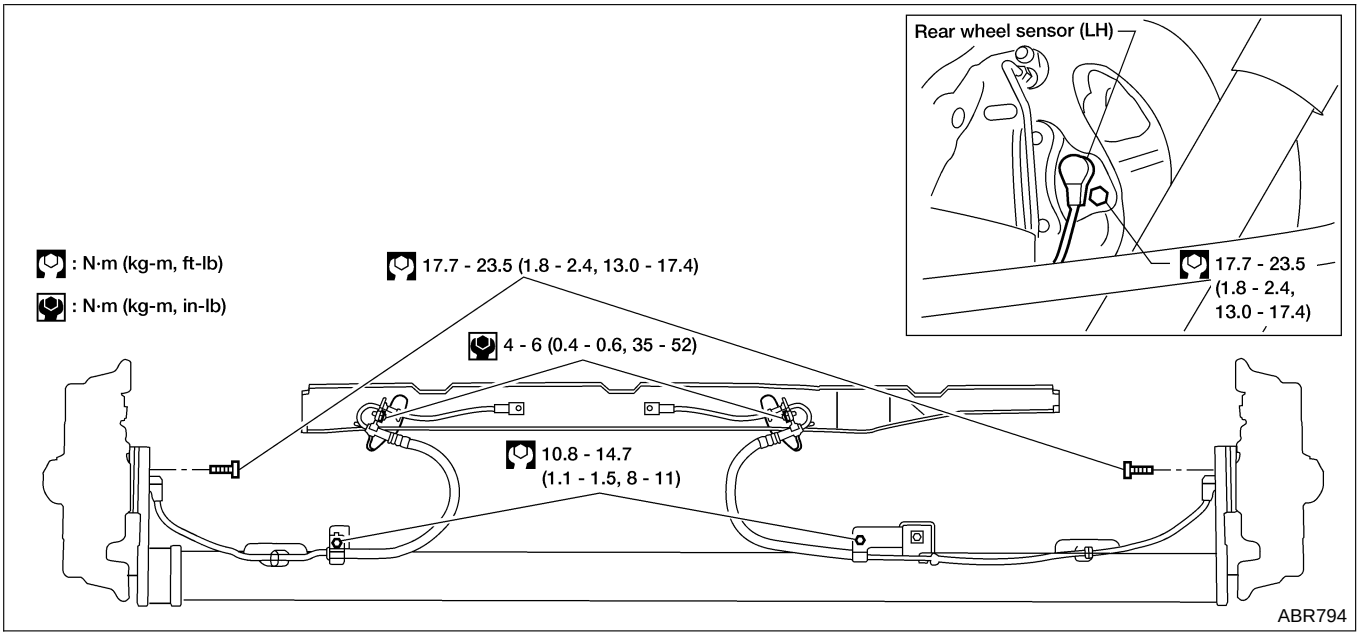

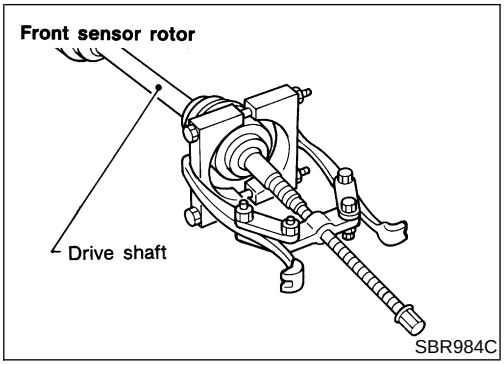

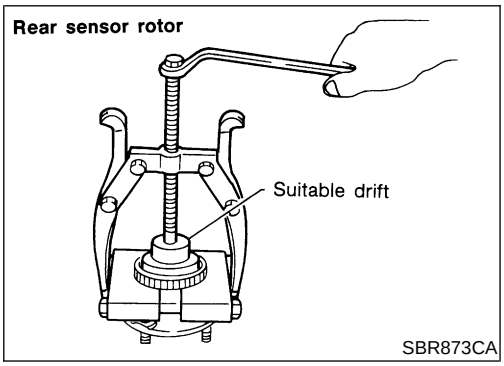

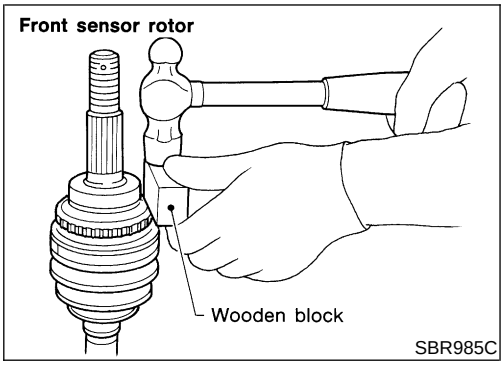

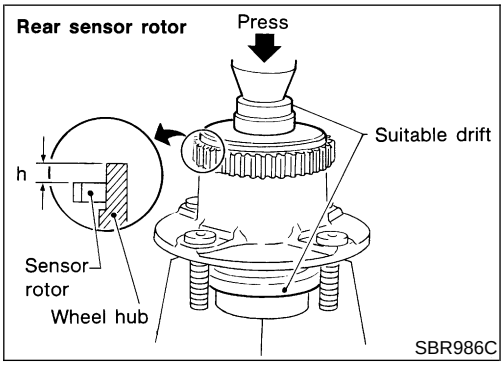

Sensor Rotor

NDBR0078S03

REMOVAL

NDBR0078S0301

1. Remove the drive shaft or rear wheel hub. Refer to “Removal”, ***AX-10*** or “Removal”, ***AX-19*** respectively.
2. Remove the sensor rotor using suitable puller, drift and bearing replacer.

INSTALLATION

NDBR0078S0302

Install the sensor rotor. For front sensor rotor, use hammer and wooden block. For rear sensor rotor, use suitable drift and press.

- Always replace sensor rotor with new one.

- Pay attention to the dimension of rear sensor rotor as shown in figure.

  h: 0.0 - 0.6 mm (0.000 - 0.024 in)

Actuator

NDBR0078S07

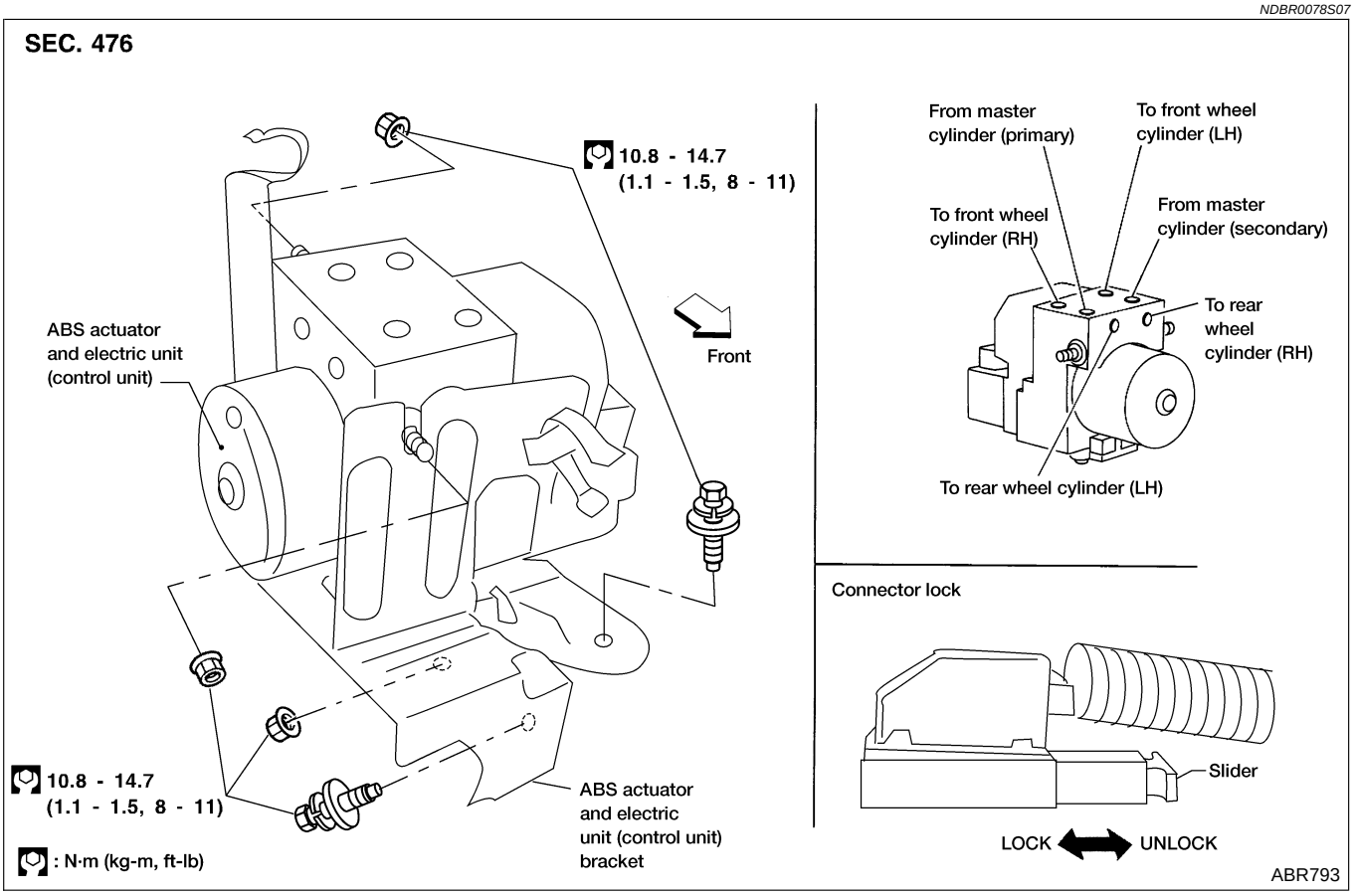

REMOVAL

NDBR0078S0701

1. Disconnect battery cable.
2. Drain brake fluid. Refer to “Changing Brake Fluid”, BR-6.
3. Remove air cleaner assembly.
4. Remove intake air duct assembly.
5. Remove mounting bracket fixing bolts and nuts.
6. Disconnect connector, brake pipes and remove fixing nuts.

INSTALLATION

NDBR0078S0702

CAUTION:

After installation, refill brake fluid. Then bleed air. Refer to “Bleeding Brake System”, BR-7.

1. Connect brake pipes temporarily.
2. Tighten fixing bolts and nuts.
3. Tighten brake pipes.
4. Connect connector and battery cable.

General Specifications

NDBR0079
Unit: mm (in)

Applied model		QG18	SR20
Front brake	Brake model	CL25VA	CL25VB
	Cylinder bore diameter	57.2 (2.252)	
	Pad length × width × thickness	125.6 × 46.0 × 11.0 (4.94 × 1.811 × 0.433)	
	Rotor outer diameter × thickness	257 × 22 (14.00 × 0.87)	280 × 22 (15.00 × 0.87)
Rear brake	Brake model	LT20G	CL9HC
	Cylinder bore diameter	17.46 (11/16)	33.96 (1.3370)
	Lining or pad length × width × thickness	219.4 × 35 × 4.3 (8.64 × 1.38 × 0.169)	89.1 × 39.5 × 10 (3.508 × 1.555 × 0.39)
	Drum inner diameter or rotor outer diameter × thickness	203.2 (8)	258 × 9 (10.16 × 0.35)
Master cylinder	Cylinder bore diameter	23.81 (15/16)	23.81 (15/16)
Control valve	Valve model	Dual proportioning valve	
	Split point kPa (kg/cm^2, psi) × reducing ratio	1,961 (20, 284) × 0.2	2,942 (30, 427) × 0.2
Brake booster	Booster model	M215T	
	Diaphragm diameter	Primary: 230 (9.06) Secondary: 205 (8.07)	
Brake fluid	Recommended brake fluid	DOT 3	

Disc Brake

NDBR0080
Unit: mm (in)

Pad wear limit Minimum thickness	2.0 (0.079)
Rotor repair limit Minimum thickness	24.0 (0.945)

Drum Brake

NDBR0081
Unit: mm (in)

Lining wear limit Minimum thickness	2.0 (0.079)
Drum repair limit Maximum inner diameter	251.5 (9.90)

Brake Pedal

NDBR0082
Unit: mm (in)

Free height “H”	195 - 205 (7.68 - 8.07)
Depressed height “D” [under force of 490 N (50 kg, 110 lb) with engine running]	115 - 130 (4.53 - 5.12)
Clearance “C” between pedal stopper and threaded end of stop lamp switch or ASCD brake switch	0.3 - 1.0 (0.012 - 0.039)
Pedal free play	1.0 - 3.0 (0.039 - 0.118)

Parking Brake Control

NDBR0083
Unit: Number of notches

Control type	Foot lever
Pedal stroke [under force of 196 N (20 kg, 44 lb)]	5 - 6