FRONT AXLE & FRONT SUSPENSION

SECTION FA

Search

CONTENTS

FA

When you read wiring diagrams:

- **Read GI section, "HOW TO READ WIRING DIAGRAMS".**
- **See EL section, "POWER SUPPLY ROUTING" for power distribution circuit.**

Wheel alignment
- Camber, caster and kingpin inclination are preset at factory and cannot be adjusted.
- The vehicle requires only toe-in adjustment.
  1 - 3 mm (0.04 - 0.12 in)
  6' - 17' (Total toe-in)

Refer to section MA for Checking Wheel Alignment.

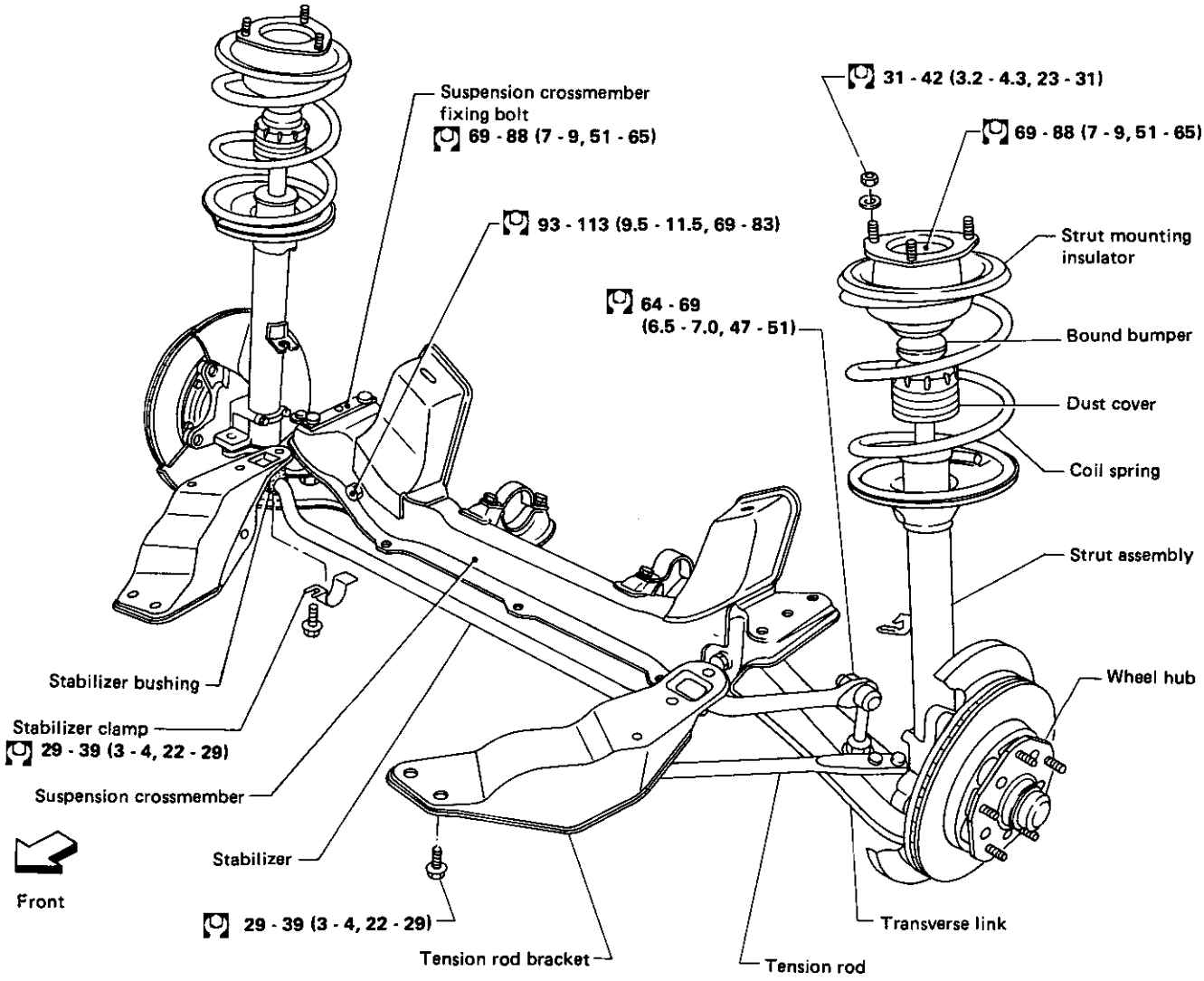

Wheel bearing
- Do not overtighten wheel bearing nut, as this can cause wheel bearing seizure.
- **Axial play: 0 mm (0 in)**
- **Tightening torque 25 - 29 N·m (2.5 - 3.0 kg-m, 18 - 22 ft-lb)**
- **Return angle 60°**
- **Rotation starting torque**
  with new grease seal 0.39 - 0.83 N·m (4.0 - 8.5 kg-cm, 3.5 - 7.4 in-lb)
  with used grease seal 0.10 - 0.44 N·m (1.0 - 4.5 kg-cm, 0.87 - 3.91 in-lb)
  As measured at wheel hub bolt
  with new grease seal 6.86 - 14.61 N (0.70 - 1.49 kg, 1.54 - 3.29 lb)
  with used grease seal 1.67 - 7.75 N (0.17 - 0.79 kg, 0.37 - 1.74 lb)
- When measuring starting torque, do not include "dragging" resistance with brake pads.

: N·m (kg-m, ft-lb)

SFA236A

VG30E ENGINE MODEL

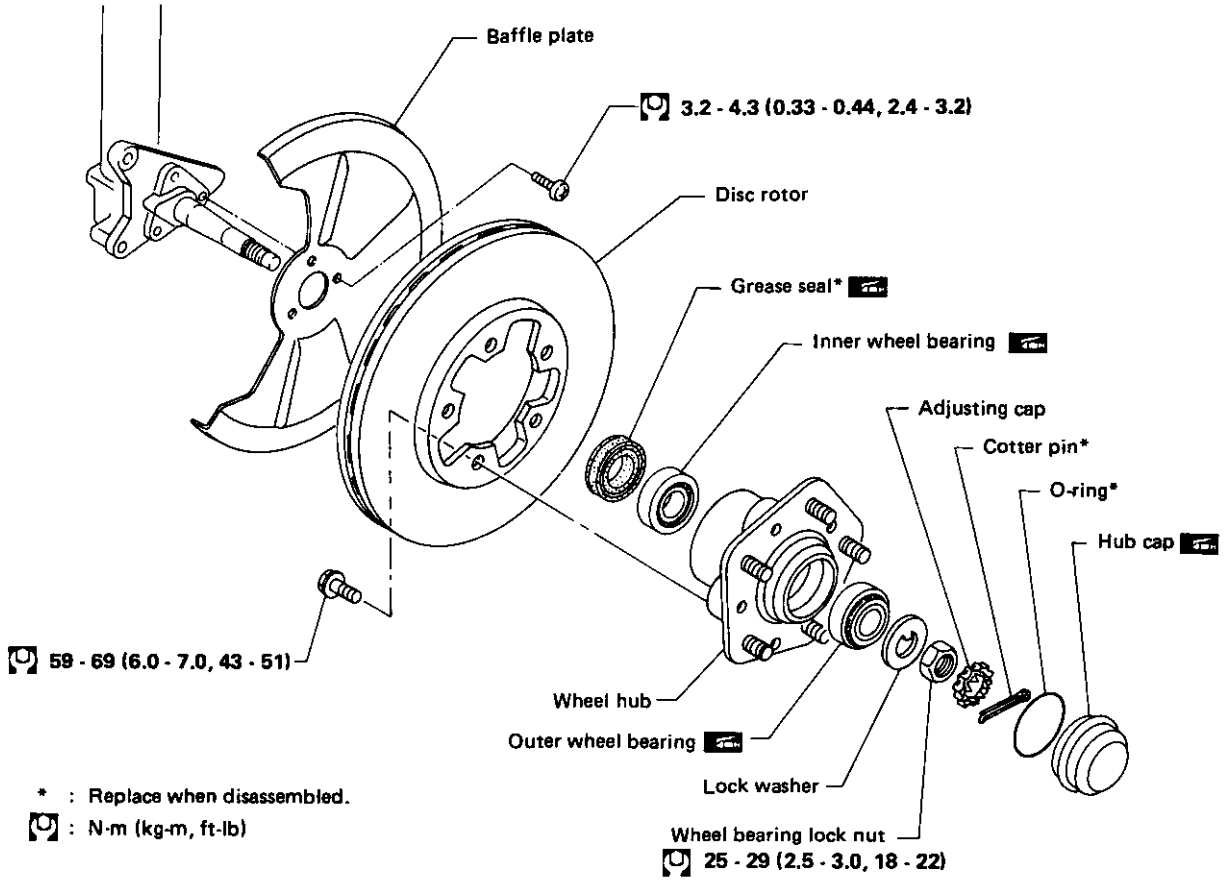

* : Replace when disassembled.
: N·m (kg-m, ft-lb)

VG30ET ENGINE MODEL

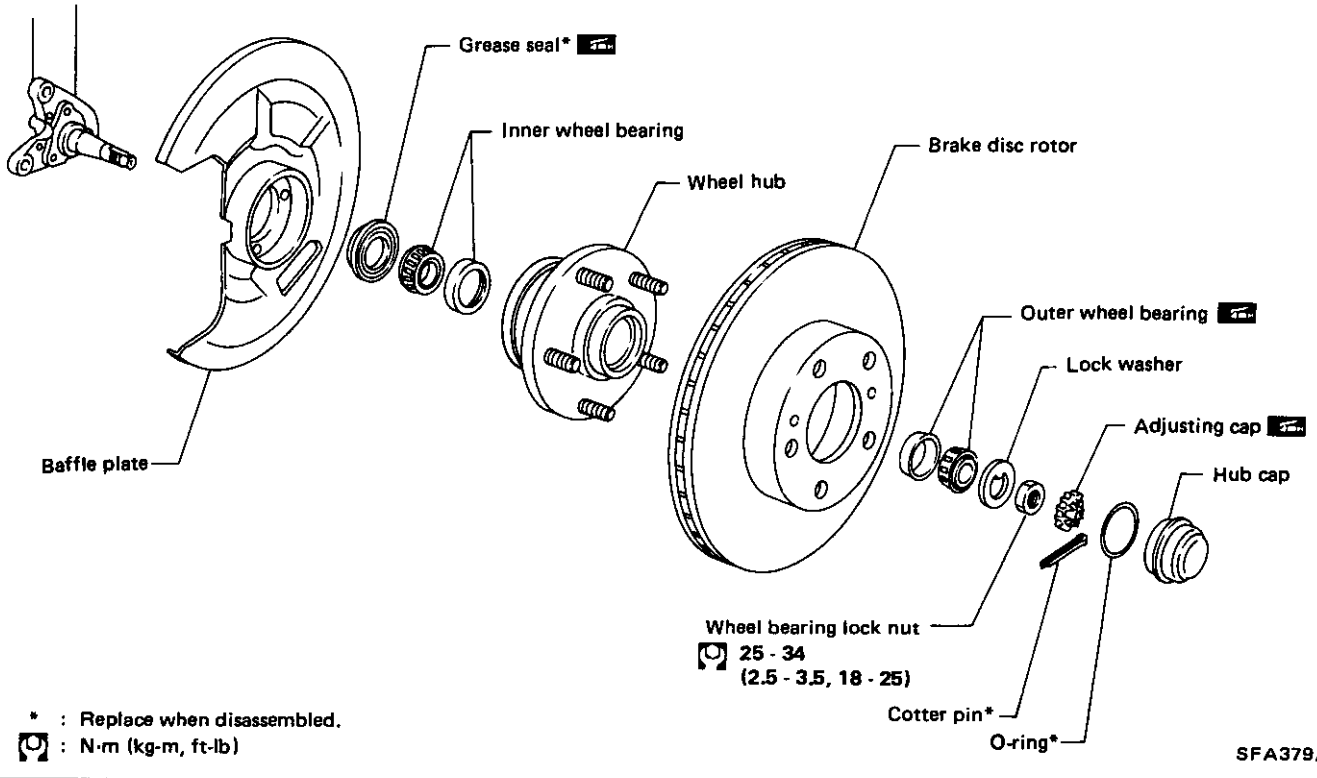

* : Replace when disassembled.
: N·m (kg-m, ft-lb)

Removal

1. Remove brake caliper assembly.

Brake hose does not need to be disconnected from brake caliper assembly.

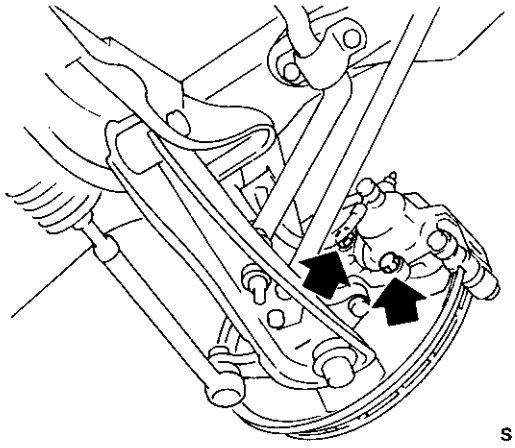

SFA567

2. Remove wheel hub with disc brake rotor and wheel bearing from spindle.

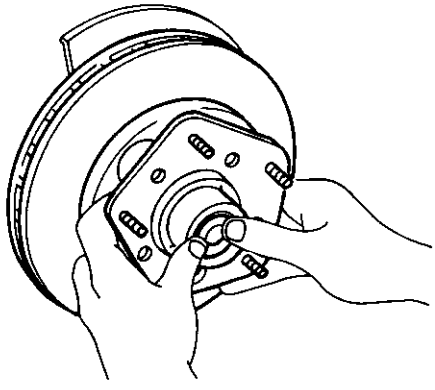

SFA975

Be careful not to drop outer bearing.

3. If replacement of outer race is necessary, drive it out from hub with a brass drift and mallet.

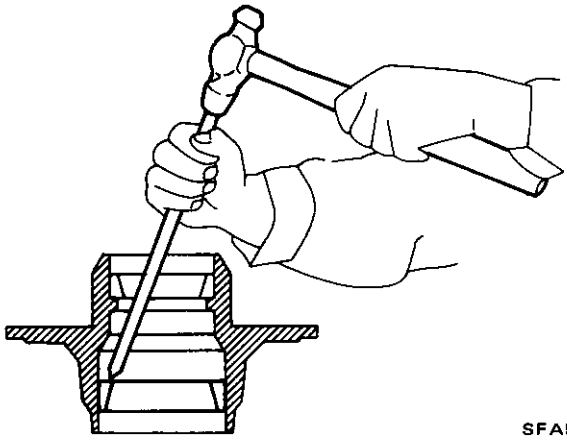

SFA580

Inspection

WHEEL BEARING

Make sure wheel bearing rolls freely and is free from noise, crack, pitting or wear.

WHEEL HUB

Check wheel hub for cracks by using a magnetic exploration or dyeing test, and replace if cracked.

Installation

- Pack hub and hub cap with recommended multi-purpose grease up to shaded portions.

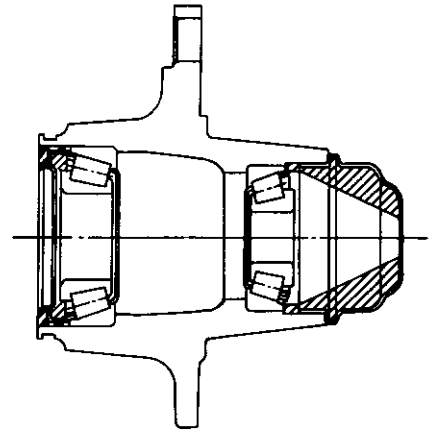

SFA966

- Coat each bearing cone with recommended multi-purpose grease.

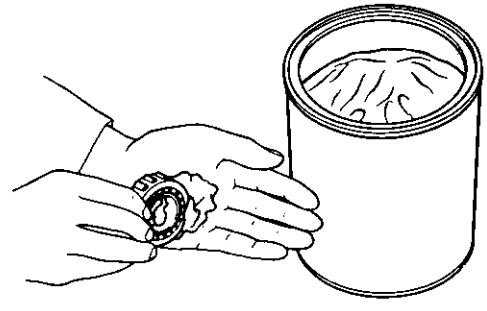

FA781

Preload Adjustment

After wheel bearing has been replaced or front axle has been reassembled, adjust wheel bearing preload.

1. Throughly clean all parts to prevent dirt entry before adjustment.
2. Apply recommended multi-purpose grease sparingly to the following parts.

- Threaded portion of spindle.
- Contact surface between lock washer and outer wheel bearing.
- Hub cap and O-ring.
- Grease seal lip.

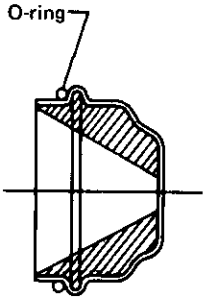

: Multi-purpose grease point

SMA203A

3. Tighten wheel bearing lock nut.

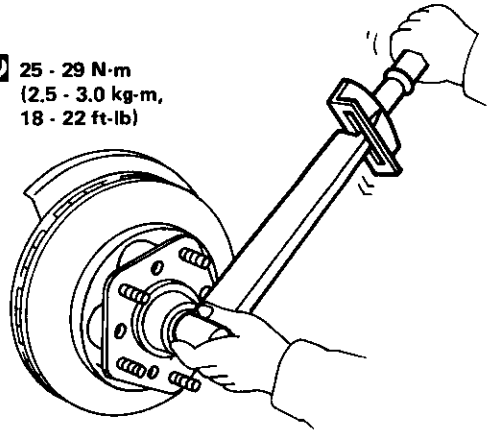

SFA976

4. Turn wheel hub several times in both directions to seat wheel bearing correctly.
5. Again tighten wheel bearing nut.
6. Turn back wheel bearing lock nut within 60°.
7. Install adjusting cap and new cotter pin.

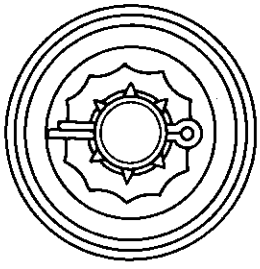

SFA967

8. Measure wheel bearing preload and axial play.

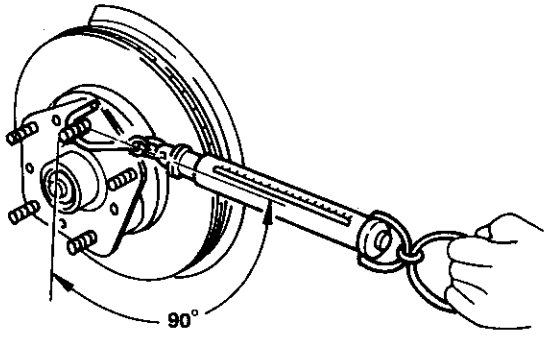

Axial play: 0 mm (0 in)
When bearing preload
(As measured at wheel hub bolt):
With new parts
6.86 - 14.61 N (0.70 - 1.49 kg, 1.54 - 3.29 lb)
With used parts
1.67 - 7.75 N (0.17 - 0.79 kg, 0.37 - 1.74 lb)

SFA977

Repeat above procedures until correct starting torque is obtained.

9. Spread cotter pin.

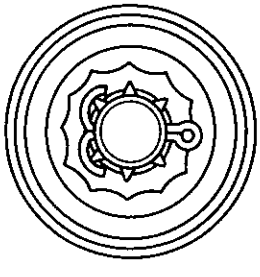

SFA968

10. Install hub cap with new O-ring.

When removing each suspension part, check wheel alignment and adjust if necessary.
Refer to section MA for front axle and front suspension.
Final tightening requires to be carried out with tires on ground.
When installing a bushing, do not allow it to project beyond the surface area of the washer.
Do not allow the bushings and washers to come in contact with grease, oil, or soapy water.
*: Replace when disassembled.

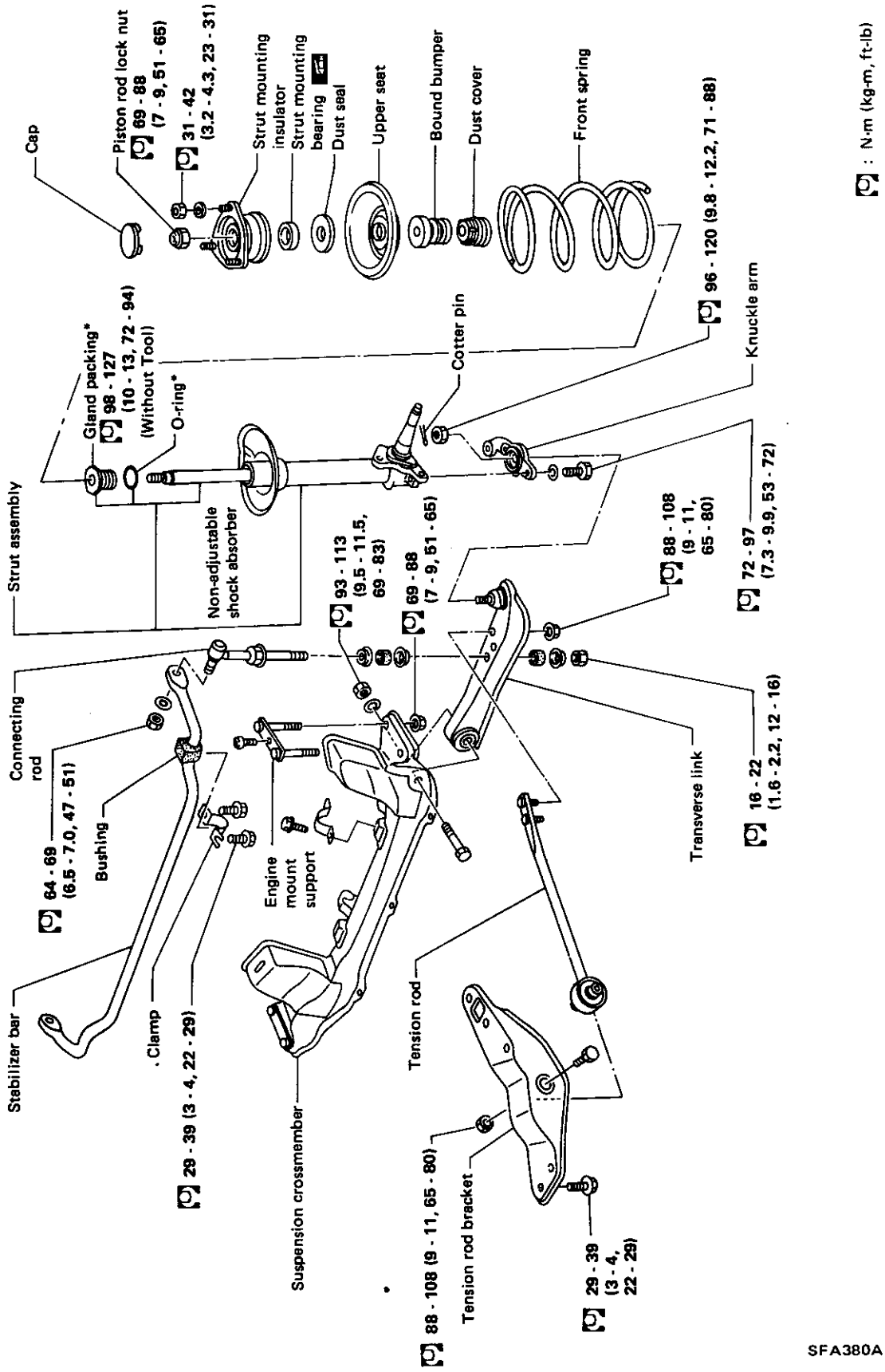

: N·m (kg·m, ft·lb)

Removal and Installation

- Remove brake caliper assembly without disconnecting brake line.

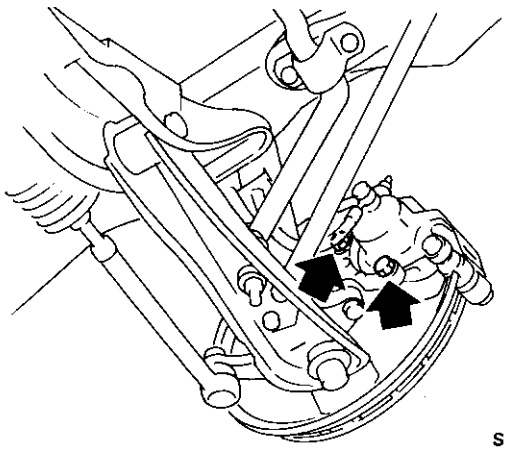

SFA567

- Remove knuckle arm fixing bolts.

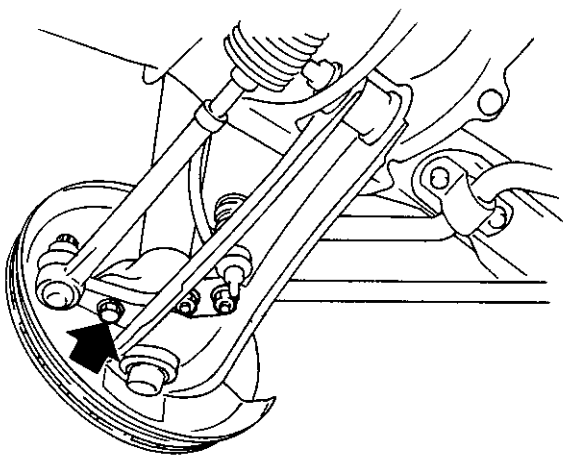

SFA978

Make sure brake hose is secure.

Disassembly

Avoid dirt and dust getting inside strut.

- Compress spring to permit turning of strut mounting insulator by hand.

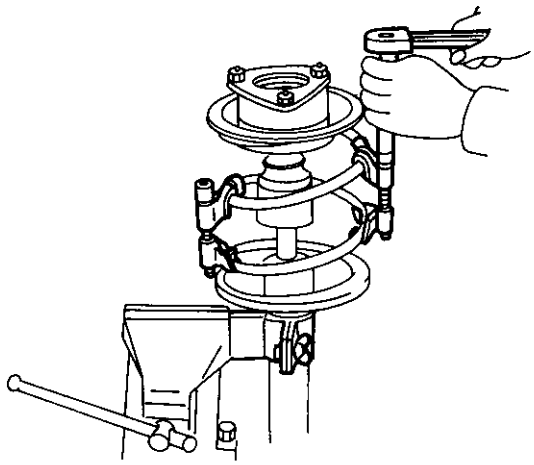

SFA571

- Remove piston rod lock nut.

Be careful not to damage bolts.

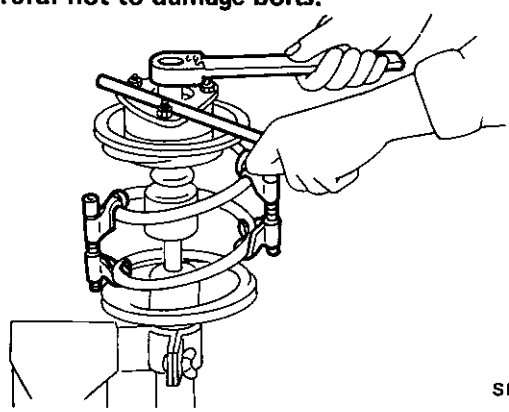

SFA572

- Remove gland packing with Tool. Retract piston rod by pushing it down until it bottoms.

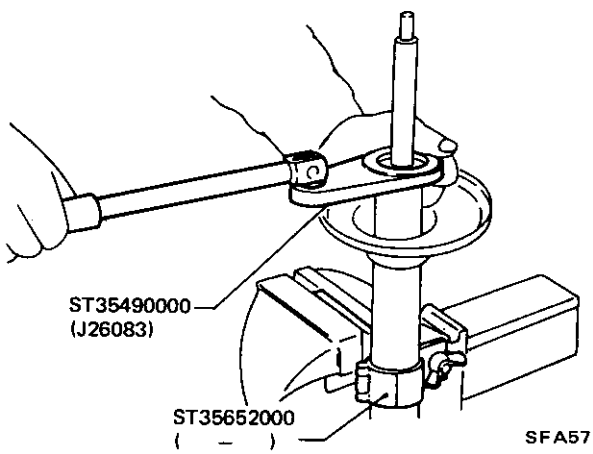

SFA573

- Slowly withdraw piston rod and cylinder.

Inspection

- Wash all parts, except for nonmetallic parts, clean with suitable solvent and dry with compressed air.
- Blow dirt and dust off of nonmetallic parts using compressed air.

a. **Oil oozing out around gland packing does not call for strut replacement.**
If oil leakage is evident on spring seat, check piston rod and gland packing to correct the cause of problem.
If oil leakage occurs on welded portion of outer strut casing, replace strut assembly.

b. **If shock absorber itself is malfunctioning, replace as shock absorber kit-cartridge.**

INNER CYLINDER AND OUTER CASING

- Inspect inner cylinder and outer casing for cracks, deformation or other damage. For inner cylinder damage, replace shock absorber kit-cartridge. For *outer casing damage, replace* strut assembly.

Inner diameter:
Inner cylinder
32.0 - 32.1 mm (1.260 - 1.264 in)

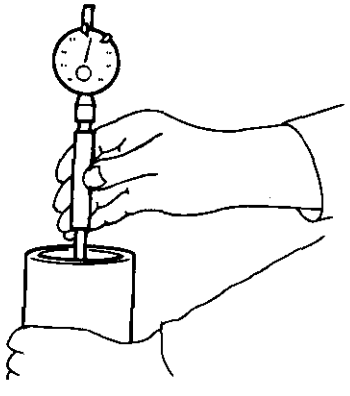

SFA136

Maximum runout:
Inner cylinder
Less than 0.2 mm (0.008 in)

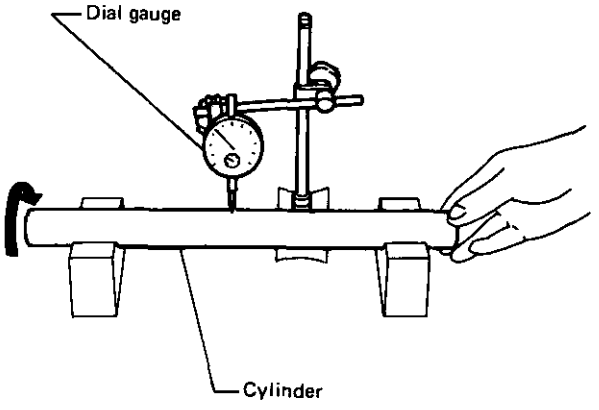

SFA137

PISTON ROD

- Inspect piston rod for cracks, deformation or other damage. Replace shock absorber kit-cartridge, if necessary.
- Inspect threads for cracks or other damage. Replace shock absorber kit-cartridge, if necessary.

Rod diameter:
Refer to S.D.S.
Maximum runout:
0.2 mm (0.008 in)

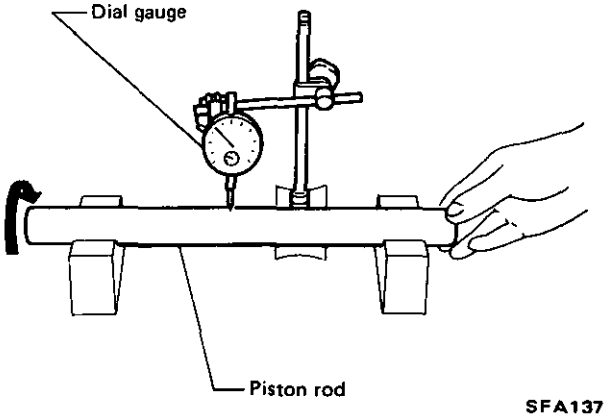

SFA137

STRUT MOUNTING INSULATOR

Replace if cemented rubber-to-metal portion are melted or cracked. Rubber parts also need to be replaced, if deteriorated.

STRUT MOUNTING BEARING

Replace if inspection reveals abnormal noise or excessive rattle in axial direction.

Assembly

Before assembly, keep all parts away from dust.

[When shock absorber kit-cartrigde is not used.]

(1) Add oil.

Use "NISSAN GENUINE STRUT FLUID" or equivalent.

Oil capacity is very important since strut performance varies with amount of fluid in strut.

Capacity:

270 mℓ (9.1 US fl oz, 9.5 Imp fl oz)

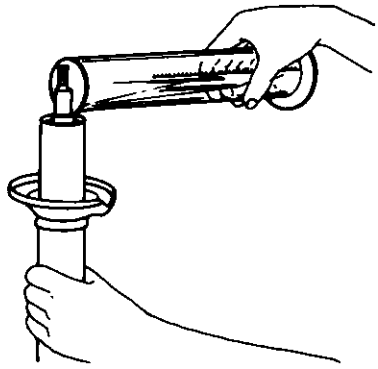

FA065

(2) Lubricate sealing lip of gland packing.

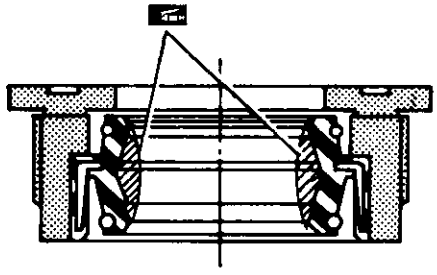

SFA141

(3) Install gland packing.

Cover piston rod with tape so as not to damage sealing lip.

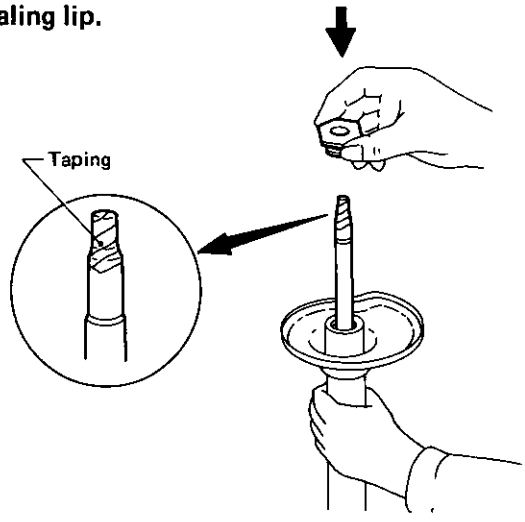

SFA574

- Tighten gland packing with Tool.

Be careful not to damage piston rod.

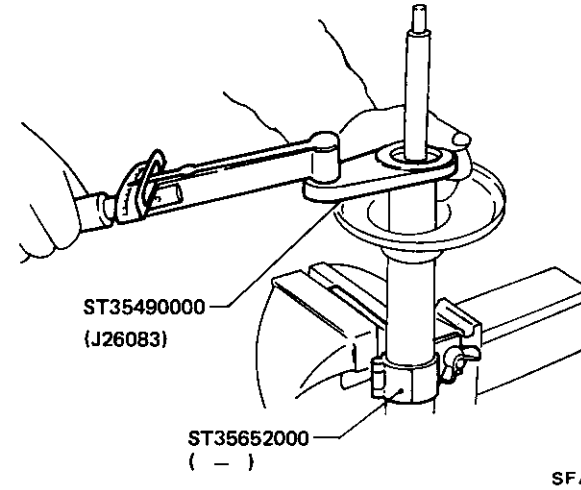

SFA591

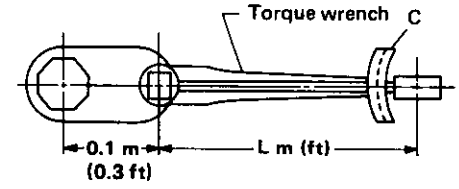

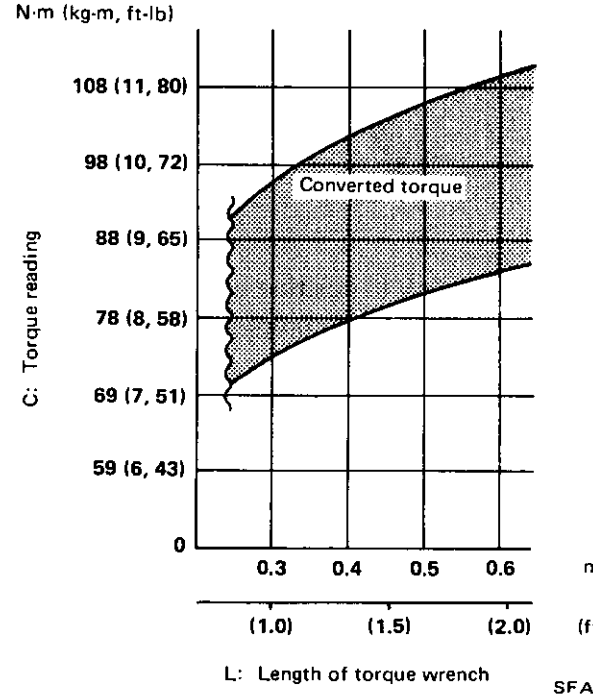

SFA672

Assembly (Cont'd)

Repeat following procedures several times so that air will be thoroughly bled from strut.
[When absorber kit-cartridge is not used.]

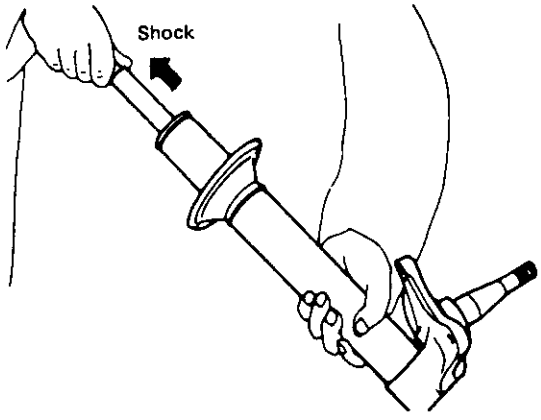

FA279

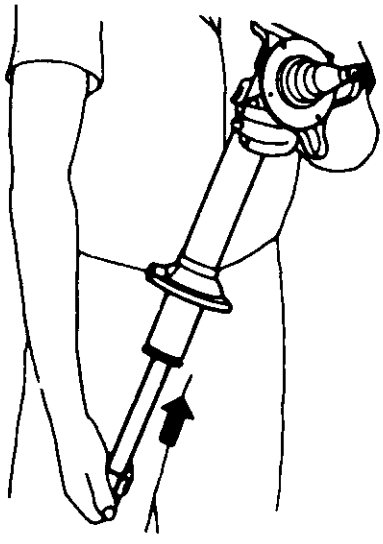

FA280

After placing spring in position between upper and lower spring seats, release compressor gradually.

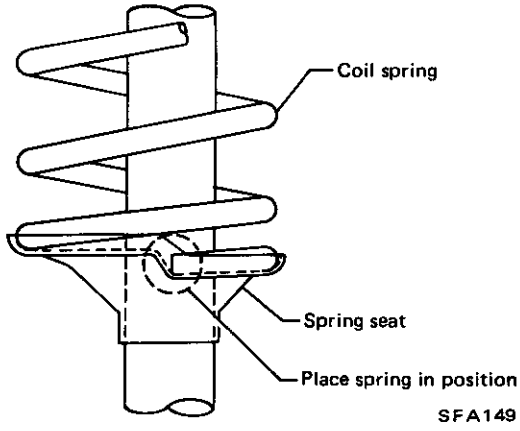

SFA149

Removal and Installation

[STABILIZER BAR]

- Remove stabilizer bar.

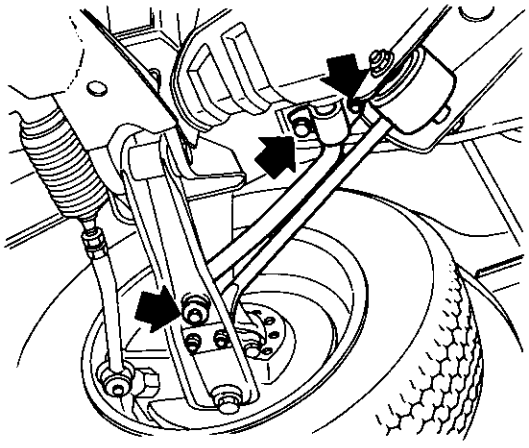

SFA381A

- When removing and installing stabilizer bar, fix portion A.

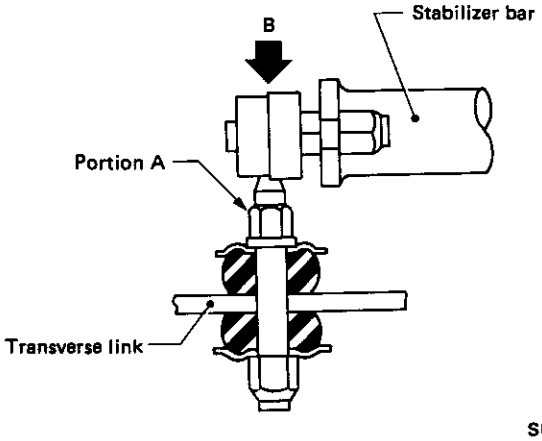

SFA239A

- Install stabilizer bar and ball joint socket properly placed.

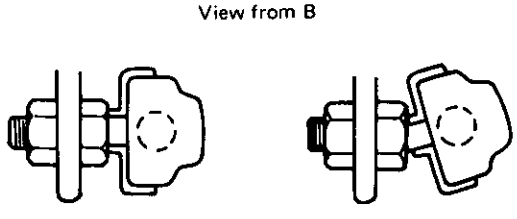

SFA002A

[TENSION ROD]

- Remove tension rod.

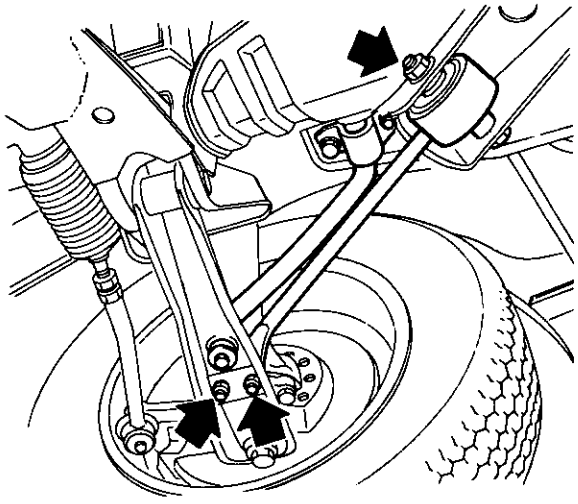

SFA382A

- **Final tightening needs to be carried out at curb weight with tires on ground.**

Removal and Installation

- Separate knuckle arm from tie-rod with Tool.

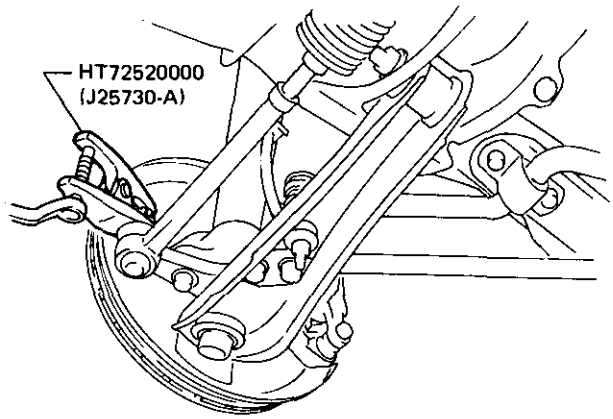

SFA575

- Separate knuckle arm from strut. Then remove stabilizer, tension rod and transverse link.

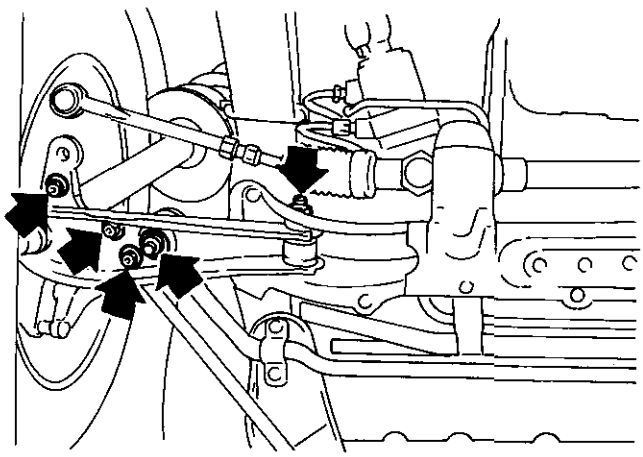

SFA576

- Separate ball joint from knuckle arm with press.

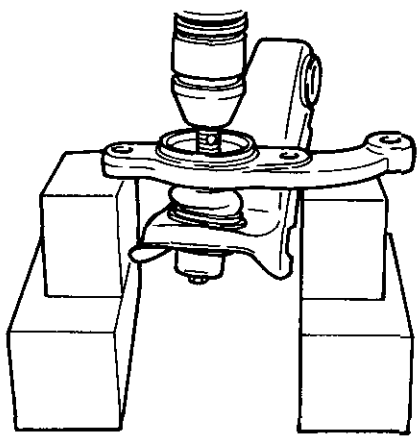

SFA577

- To install transverse link, first temporarily tighten nuts securing transverse link spindle which connects transverse link to suspension cross member.
- Final tightening needs to be carried out at curb weight with tires on ground.
- Make sure mating surface of bushing is clean and free from oil and grease.

Inspection

- Check ball joint for play. If ball stud is worn, play in axial direction is excessive or joint is hard to swing, replace transverse link assembly.

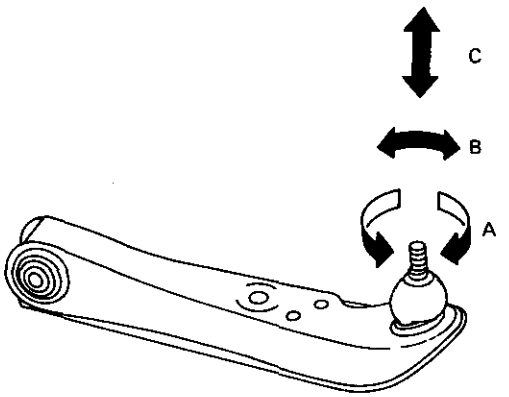

SFA581

Turning torque "A":
New parts
1.5 - 4.9 N·m
(15 - 50 kg-cm, 13 - 43 in-lb)
Used parts
1.0 N·m (10 kg-cm, 8.7 in-lb) or more
Turning torque "B":
New parts
1.5 - 4.9 N·m
(15 - 50 kg-cm, 13 - 43 in-lb)
Used parts
1.0 N·m (10 kg-cm, 8.7 in-lb) or more
Vertical end play "C":
2.5 mm (0.098 in) or less

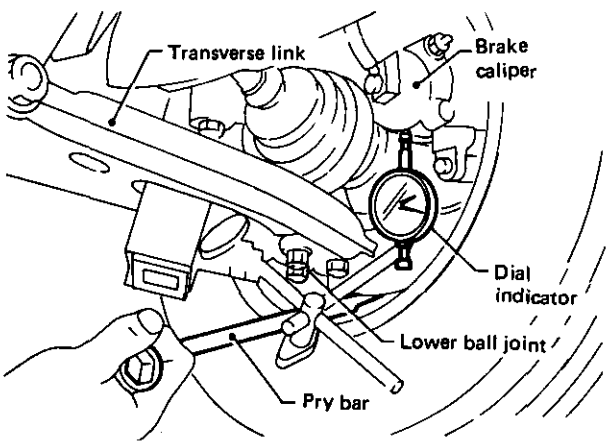

SFA301A

(1) Jack up front of vehicle and set the stands.
(2) Clamp dial indicator onto transverse link and place indicator tip on lower edge of brake caliper.
(3) Make sure front wheels are straight and brake pedal is depressed.
(4) Place a pry bar between transverse link and inner rim of road wheel.
(5) While pushing and releasing pry bar, observe maximum dial indicator value.
(6) Replace transverse link or lower ball joint if ball joint movement is beyond specifications.

- Check condition of dust cover. Replace if necessary.
- Check rubber bushing for cracks, deformation or other damage; bush assembly if necessary.
- Check transverse link for cracks, deformation or other damage; replace transverse link if necessary.
- Remove plug and install grease nipple in its place.
  Pump grease slowly until old grease is completely forced out. After greasing, reinstall plug.

When a high-pressure grease gun is used, operate the grease gun carefully so that grease is injected slowly and new grease does not come out from the clamp portion.

Removal and Installation

Precaution

Support engine to remove load from engine mounting.

Inspection

Check suspension crossmember for deformation or cracking:

Replace if necessary.

ADJUSTABLE SHOCK ABSORBER

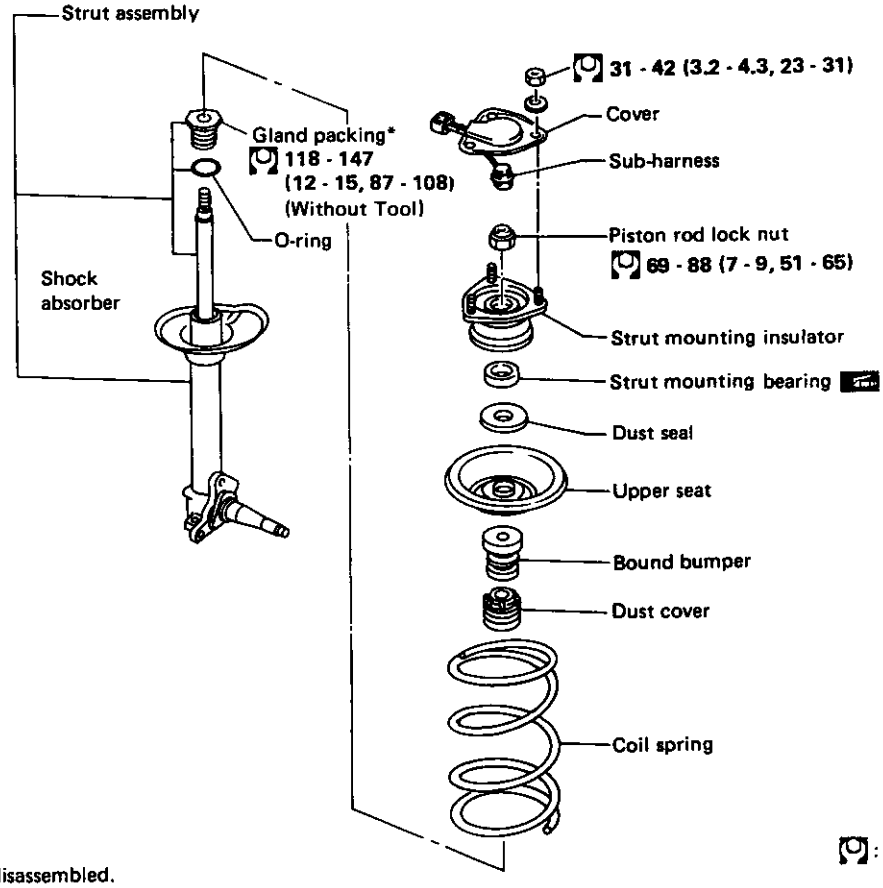

: N·m (kg-m, ft-lb)

* Always replace once disassembled.

SFA979

Removal and Installation

CAUTION:

Keep water and dust away from connector.

Disconnect connector gripping on both sides of sub-harness connector.

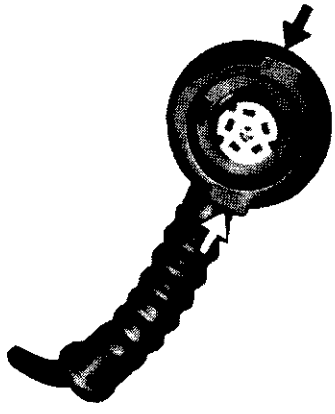

- Remove strut and knuckle arm fixing bolts.

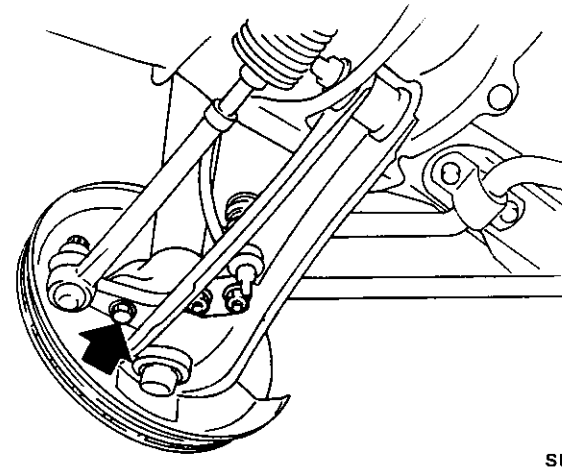

SFA978

Make sure that brake hose is secure.

Removal and Installation (Cont'd)

- **Connect sub-harness to connector within piston rod using guide. Be careful not to damage connector.**

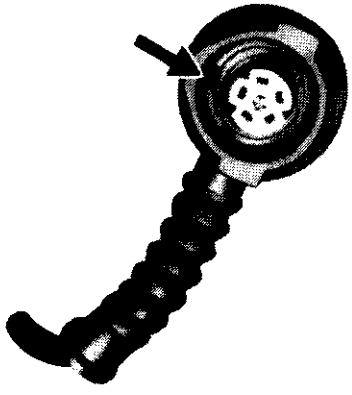

Disassembly

Avoid dirt and dust getting inside strut.

- Remove coil spring. Refer to Front Suspension (Spring and Strut Assembly).
- Remove gland packing. Refer to Front Suspension (Spring and Strut Assembly).

Inspection

Refer to Front Suspension (Spring and Strut Assembly).

Assembly

- Carefully insert the shock absorber cartridge into the outer strut tube.

CAUTION:
Do not drop the shock absorber.

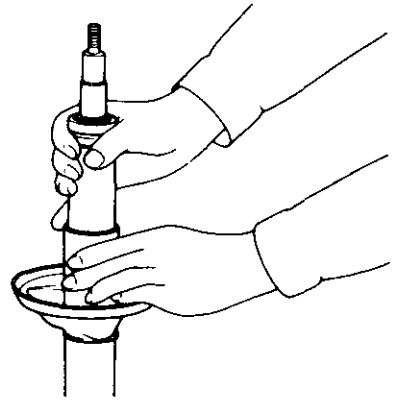

SFA165

- After the shock absorber has been inserted into the outer tube, gently shake the strut assembly right and left so that the shock absorber is centered.
- Install gland packing and tighten the gland packing with the Gland Packing Wrench and a torque wrench.
  Refer to Spring and Strut Assembly for assembly.

Assembly (Cont'd)

Be careful not to damage piston rod when tightening.

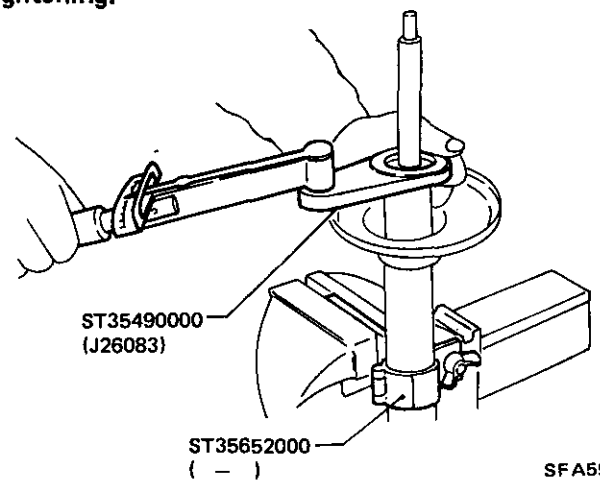

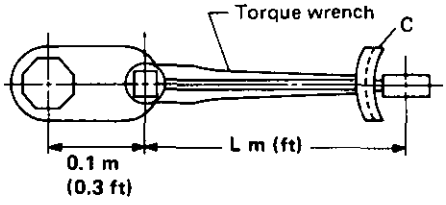

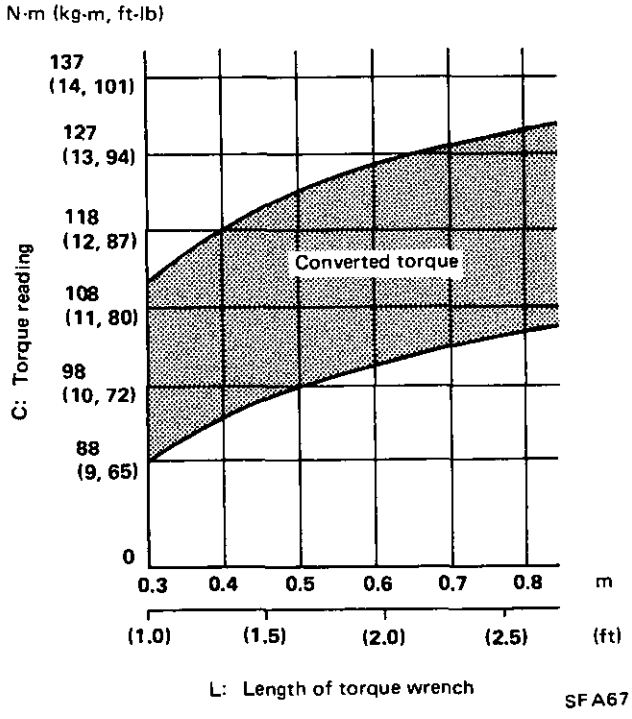

- Further steps are the same procedure as the conventional strut assembly. Refer to Spring and Strut Assembly for assembly.

ADJUSTABLE SHOCK ABSORBER

Harness Description

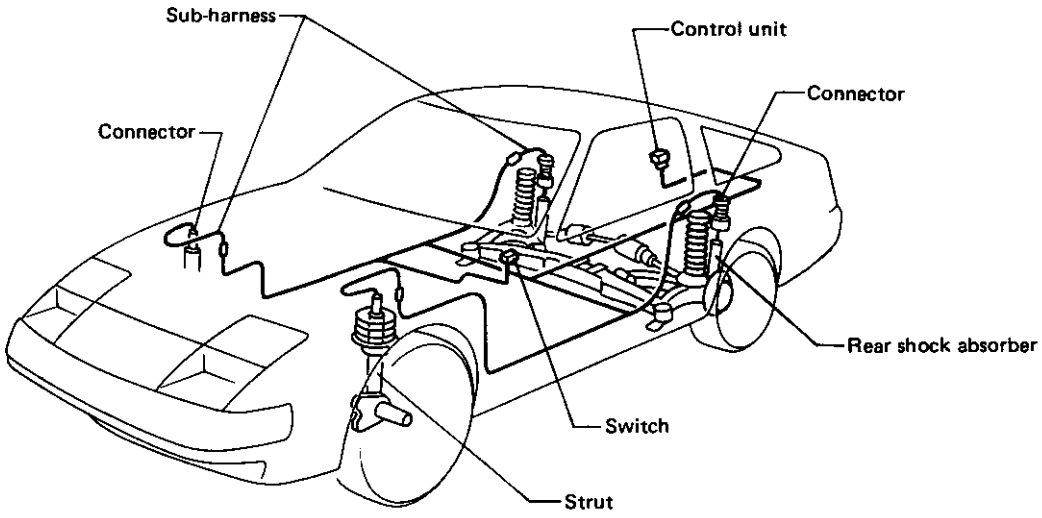

SFA590

Electrical Circuit

SCHEMATIC

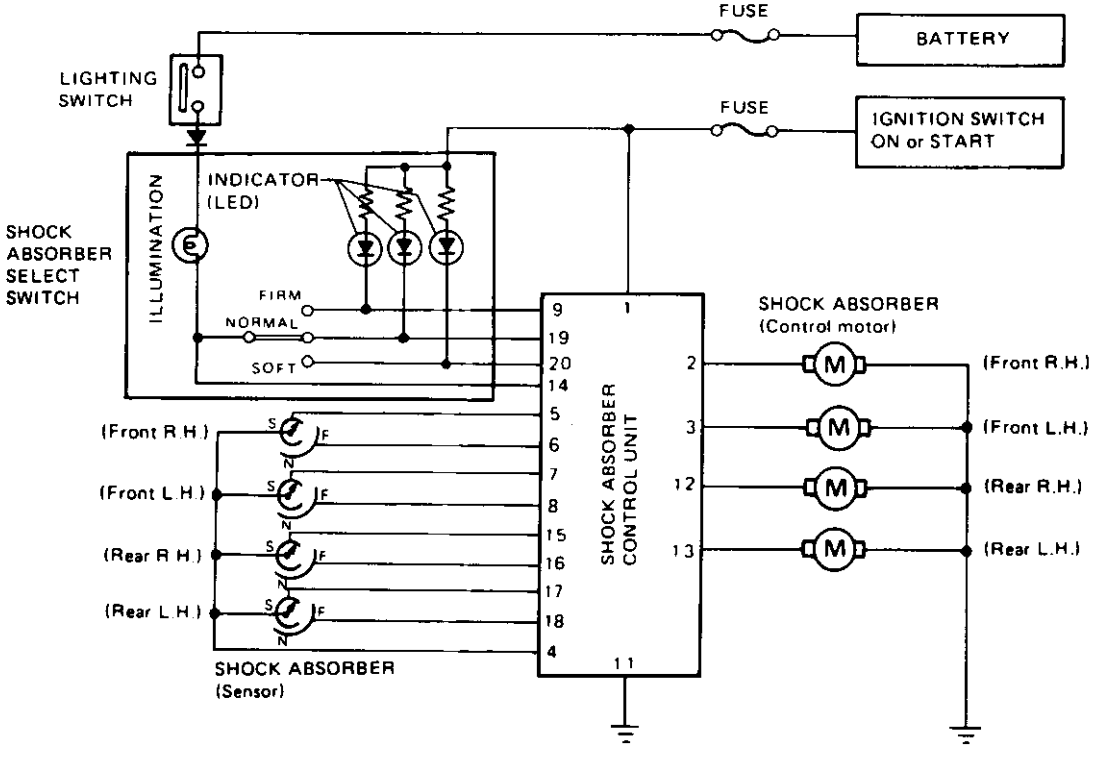

SFA195A

Electrical Circuit (Cont'd)

WIRING DIAGRAM

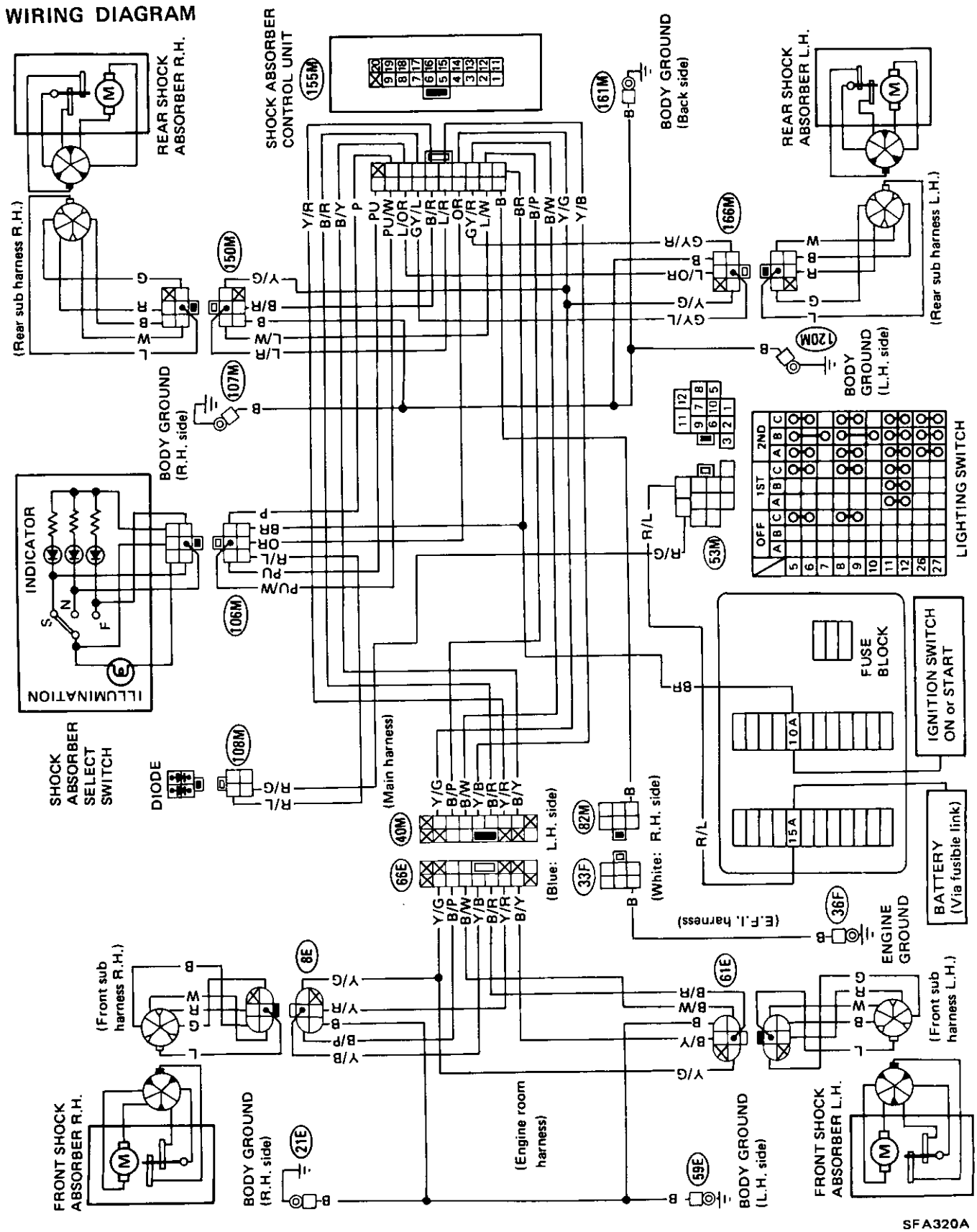

ADJUSTABLE SHOCK ABSORBER

Trouble-shooting

- The shock absorber control unit has a self-check function to determine whether the control unit itself is working or not.
- A malfunction is displayed by the lamp (L.E.D.) which is located on select switch.

No.	Phenomenon on switch	Possible cause	
1	3 lamps all off	• Lamp (L.E.D.) burnt out • Harness wire broken	• Fuse blown • Select switch out of order
2	2 lamps on	• Select switch out of order • Switch side harness shorted	
3	3 lamps all on	• Select switch out of order • Switch side harness shorted	• Control unit out of order
4	One lamp on and 2 lamps on and off	• Shock absorber damage • Open circuit in main harness	• Open circuit in sub-harness • Control unit out of order

Make sure that connectors are connected properly and that battery is in good condition before starting trouble diagnoses.

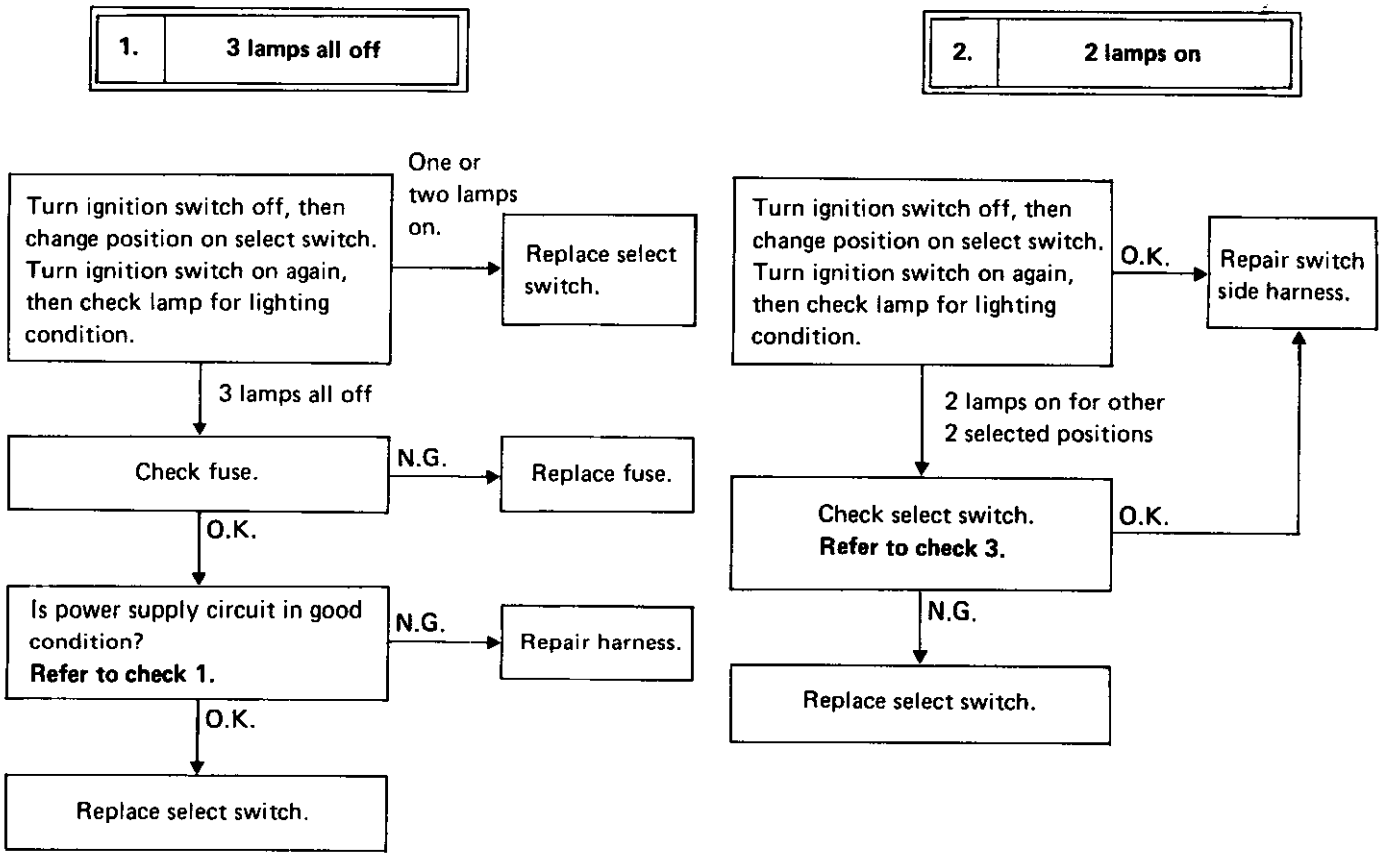

Trouble-shooting (Cont'd)

3. 3 lamps all on

Turn ignition switch off, then change the position on the select switch. Turn the ignition switch on again, then check the lamp for lighting condition.

N.G. → Check select switch. **Refer to check 3.**

O.K. → Check control unit. **Refer to check 2.**

N.G. → Replace select switch.

O.K. One lamp on and two lamps off for other 2 selected positions. → Check control unit. **Refer to check 2.**

4. One lamp on and 2 lamps on and off

Turn ignition switch off, then check each harness connector for connecting condition. Turn the ignition switch on again, then check the lamp for lighting condition.

O.K. → END

N.G. → Check input signal of control unit. **Refer to check 2.**

- Check continuity of sensor using sub-harness connector.
  Turn select switch to S position with ignition key off. Turn ignition switch on and then turn it off in 2 or 3 seconds.
  Motors might not turn to S position if ignition key is turned off in less than 2 seconds, and motors will turn to N position if ignition key is turned on for more than 6 seconds.

N.G. → Remove the sub-harness. Then check its continuity.

O.K. → Replace shock absorber.

N.G. → Replace sub-harness.

O.K. → Replace control unit.

O.K. → Damaged control unit

N.G. → Repeat the above procedure setting select switch to N or F position.

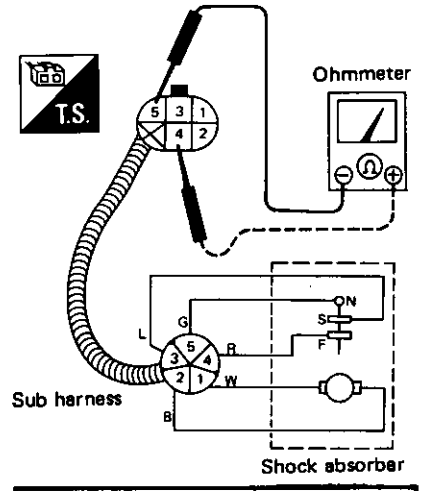

Position	Continuity	No continuity
S	3 - 5	4 - 5
F	4 - 5	3 - 5
N	3 - 5 4 - 5	

SFA085A

Terminal Check

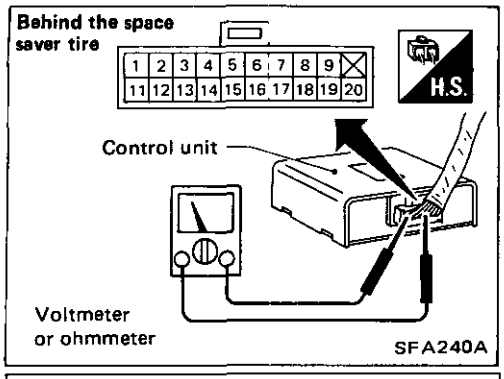

CHECK 1: POWER SUPPLY CIRCUIT CHECK

1. Connect ohmmeter from harness side.
2. Check continuity between terminal ⑪ and body ground.

Ohmmeter terminal		Continuity
(+)	(−)	
⑪	Body ground	Yes

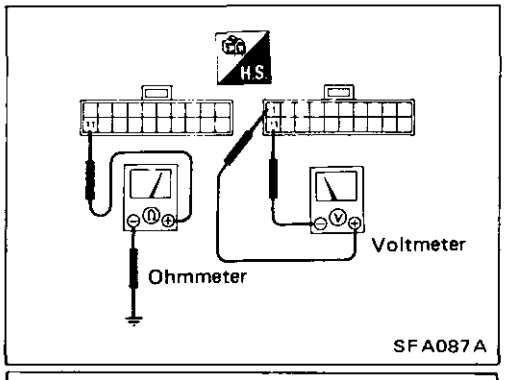

3. Connect voltmeter from harness side.
4. Measure voltage across terminal ① and ⑪ .

Voltmeter		Voltage	Condition
(+)	(−)		
①	⑪	Approx. 12 V	Ignition switch position "ON"

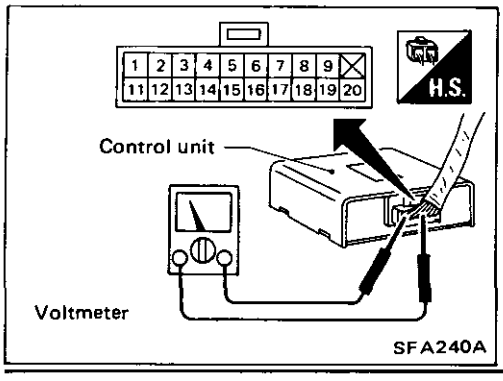

CHECK 2: CONTROL UNIT CHECK

1. Connect voltmeter from harness side.
2. Turn ignition switch to "ON".
3. Measure voltage across each terminal.

Sensor check

"SOFT"								"FIRM"								"NORMAL"		
Voltage	Terminal (+)	Terminal (−)	Remarks	Voltage	Terminal (+)	Terminal (−)	Remarks	Voltage	Terminal (+)	Terminal (−)	Remarks	Voltage	Terminal (+)	Terminal (−)	Remarks	Voltage	Terminal (+)	Terminal (−)
0V	④	⑪	GND	Approx. 7V	⑥	⑪	FR, R.H.	0V	④	⑪	GND	Approx. 7V	⑤	⑪	FR, R.H.	0V	④	⑪
	⑤		FR, R.H.		⑧		FR, L.H.		⑥		FR, R.H.		⑦		FR, L.H.		⑤⑮	
	⑦		FR, L.H.		⑯		RR, R.H.		⑧		FR, L.H.		⑮		RR, R.H.		⑥⑯	
	⑮		RR, R.H.		⑱		RR, L.H.		⑯		RR, R.H.		⑰		RR, L.H.		⑦⑰	
	⑰		RR, L.H.						⑱		RR, L.H.						⑧⑱	

Select switch check

"SOFT"						"FIRM"						"NORMAL"					
Voltage	Terminal (+)	Terminal (−)	Voltage	Terminal (+)	Terminal (−)	Voltage	Terminal (+)	Terminal (−)	Voltage	Terminal (+)	Terminal (−)	Voltage	Terminal (+)	Terminal (−)	Voltage	Terminal (+)	Terminal (−)
0 V	⑳	⑪	Approx. 11V	⑨ ⑲	⑪	0 V	⑨	⑪	Approx. 11V	⑲ ⑳	⑪	0 V	⑲	⑪	Approx. 11V	⑨ ⑳	⑪

Terminal Check (Cont'd)

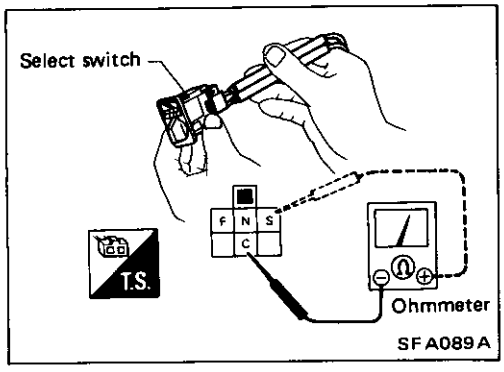

CHECK 3: SELECT SWITCH CHECK

1. Disconnect select switch connector, then connect an ohmmeter to switch.
2. Check for continuity between terminals at each switch position.

Switch position \ Terminal	C	S	N	F
"S" (Soft)	○	○		
"N" (Normal)	○		○	
"F" (Firm)	○			○

SERVICE DATA AND SPECIFICATIONS (S.D.S.)

General Specifications

Item	Engine	VG30ET			VG30E		
	Vehicle model	2 seater	2+2 seater		2 seater	2+2 seater	
	Grade	GL·GL-L			SF·GL·GL-L	GL	GL-L
Suspension		Strut with coil spring					
Coil spring							
Wire diameter	mm (in)	14.8 (0.583)			13.8 (0.543)		13.9 (0.547)
Coil diameter	mm (in)	170 (6.69)					
Free length	mm (in)	268.5 (10.57)			312.5 (12.30)		318.5 (12.54)
Spring constant	N/mm (kg/mm, lb/in)	34.3 (3.5, 196)			23.8 (2.43, 136.1)		
Identification color		Yellow x 1, Orange x 1			Blue x 1, White x 1		Blue x 1, Orange x 1
Strut							
Type		Gas-filled double acting hydraulic			Double acting hydraulic		
		Adjustable			Non-adjustable		
Inner cylinder							
Inner diameter	mm (in)	35.0 - 35.1 (1.378 - 1.382)			32.0 - 32.1 (1.260 - 1.264)		
Maximum runout	mm (in)	Less than 0.2 (0.008)			Less than 0.2 (0.008)		
Piston rod							
Rod diameter	mm (in)	25 (0.98)			22 (0.87)		
Maximum runout	mm (in)	Less than 0.1 (0.004)			Less than 0.1 (0.004)		
Stroke Maximum/Minimum	mm (in)	189.8 - 193.8/39.5 (7.47 - 7.63/1.555)					
Damping force [at 0.3 m (1.0 ft)/sec.]		Firm	Normal	Soft			
Expansion	N (kg, lb)	1,579 - 2,148 (161 - 219, 355 - 483)	1,579 - 2,148 (161 - 219, 355 - 483)	1,324 - 1,775 (135 - 181, 298 - 399)	834 - 1,128 (85 - 115, 187 - 254)		
Compression	N (kg, lb)	834 - 1,128 (85 - 115, 187 - 254)	834 - 1,128 (85 - 115, 187 - 254)	657 - 912 (67 - 93, 148 - 205)	363 - 520 (37 - 53, 82 - 117)		
Stabilizer bar diameter	mm (in)	24 (0.94)			22 (0.87)		
Tension rod diameter	mm (in)	18 (0.71)					

SERVICE DATA AND SPECIFICATIONS (S.D.S.)

Inspection and Adjustment

WHEEL ALIGNMENT (Unladen*1)

Camber	degree	–35′ to 55′
Caster	degree	5°50′ - 7°20′
Toe-in	mm (in)	1 - 3 (0.04 - 0.12)
	degree*2	6′ - 17′
Kingpin inclination	degree	12°55′ - 14°25′
Front wheel turning angle Toe-out-turn Inside/Outside	degree	22°30′/20°
Full turn Inside/Outside	degree	35° - 39°/27° - 31°

*1: Tankful of fuel, radiator coolant and engine oil full.
Spare tire, jack, hand tools, mats in designed position
*2: Total toe-in

WHEEL BEARING

Wheel bearing axial play mm (in)	0 (0)
Wheel bearing lock nut Tightening torque N·m (kg-m, ft-lb)	25 - 29 (2.5 - 3.0, 18 - 22)
Return angle degree	60°
Wheel bearing starting torque N·m (kg-cm, in-lb) With new grease seal	0.39 - 0.83 (4.0 - 8.5, 3.5 - 7.4)
With used grease seal	0.10 - 0.44 (1.0 - 4.5, 0.87 - 3.91)
At wheel hub bolt N (kg, lb) With new grease seal	6.86 - 14.61 (0.70 - 1.49, 1.54 - 3.29)
With used grease seal	1.67 - 7.75 (0.17 - 0.79, 0.37 - 1.74)

LOWER BALL JOINT

Turning torque "A", "B" N·m (kg-cm, in-lb) New part	1.5 - 4.9 (15 - 50, 13 - 43)
Used part	1.0 (10, 8.7) or more
Vertical end play "C" mm (in)	2.5 (0.098) or less

Tightening Torque

Item	N·m	kg-m	ft-lb
Wheel hub			
Wheel bearing lock nut	25 - 29	2.5 - 3.0	18 - 22
Wheel hub to disc rotor	59 - 69	6.0 - 7.0	43 - 51
Wheel nut	98 - 118	10 - 12	72 - 87
Knuckle arm and knuckle spindle (Strut assembly)			
Knuckle arm to side rod	54 - 98	5.5 - 10.0	40 - 72
Knuckle arm to knuckle spindle	72 - 97	7.3 - 9.9	53 - 72
Torque member fixing bolt	72 - 97	7.3 - 9.9	53 - 72
Knuckle spindle to baffle plate	3.2 - 4.3	0.33 - 0.44	2.4 - 3.2
Tie rod lock nut	78 - 98	8 - 10	58 - 72
Ball joint			
Lower ball joint to knuckle arm	96 - 120	9.8 - 12.2	71 - 88
Strut assembly			
Strut mounting insulator fixing bolt	31 - 42	3.2 - 4.3	23 - 31
Piston rod lock nut	69 - 88	7 - 9	51 - 65
Gland packing			
Adjustable	118 - 147	12 - 15	87 - 108
Non-adjustable	98 - 127	10 - 13	72 - 94
Transverse link			
Transverse link to suspension member	93 - 113	9.5 - 11.5	69 - 83
Tension rod			
Tension rod to tension rod bracket	88 - 108	9 - 11	65 - 80
Tension rod bracket to body	29 - 39	3 - 4	22 - 29
Tension rod to transverse link	88 - 108	9 - 11	65 - 80
Stabilizer bar			
Stabilizer bar clamp to body (tension rod bracket)	29 - 39	3 - 4	22 - 29
Stabilizer bar to transverse link	16 - 22	1.6 - 2.2	12 - 16
Stabilizer bar to connecting rod	64 - 69	6.5 - 7.0	47 - 51
Suspension member			
Suspension member to body	69 - 88	7 - 9	51 - 65

SPECIAL SERVICE TOOLS

Tool number (Kent-Moore No.)	Tool name	
ST35490000 (J26083)	Gland packing wrench	
ST35652000 (–)	Clamp	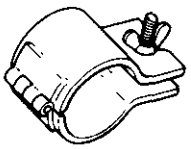
HT72520000 (J25730-A)	Ball joint remover