FRONT AXLE & FRONT SUSPENSION

SECTION FA

CONTENTS

PRECAUTIONS AND PREPARATION ..... FA- 2
FRONT AXLE AND FRONT SUSPENSION ..... FA- 5
CHECK AND ADJUSTMENT — On-vehicle ..... FA- 6
FRONT AXLE FA-11
FRONT AXLE — Wheel Hub and Steering Knuckle FA-12
FRONT SUSPENSION FA-16
FRONT SUSPENSION — Coil Spring and Shock Absorber FA-17
FRONT SUSPENSION — Third Link and Upper Link FA-19
FRONT SUSPENSION — Transverse Link and Lower Ball Joint FA-22
FRONT SUSPENSION — Tension Rod and Stabilizer Bar FA-23
SERVICE DATA AND SPECIFICATIONS (S.D.S.) FA-24

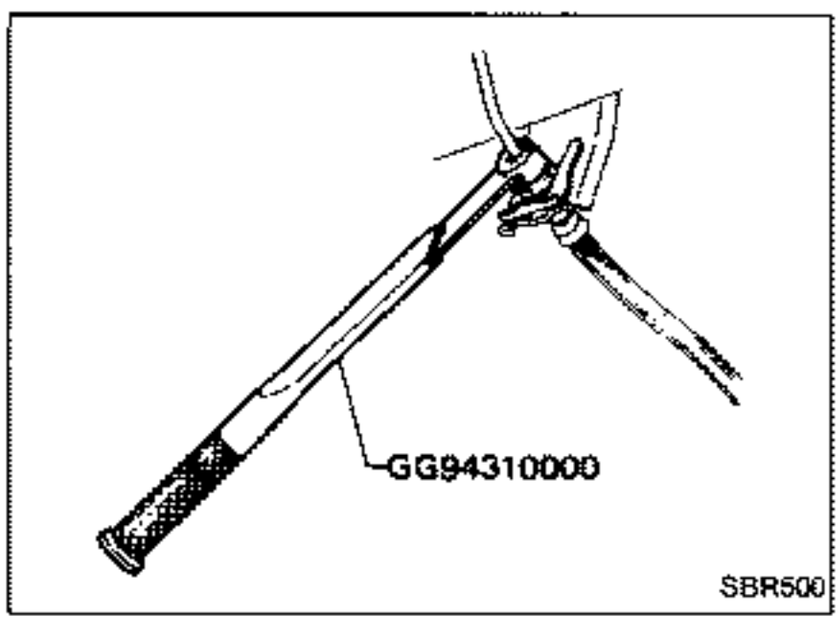

Precautions

- When installing each rubber part, final tightening must be carried out under unladen condition* with tires on ground.
  * Fuel, radiator coolant and engine oil full. Spare tire, jack, hand tools and mats in designated positions.
- When removing each suspension part, check wheel alignment and adjust if necessary.
- Use Tool when removing or installing brake lines.

Preparation

SPECIAL SERVICE TOOLS

Tool number Tool name	Description	
HT72750000 Ball joint remover	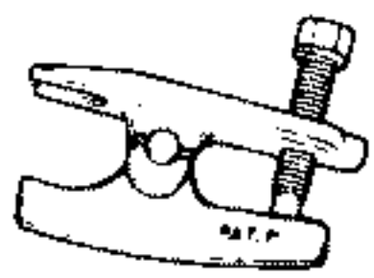	Removing tie-rod outer end and lower ball joint
HT71780000 Spring compressor	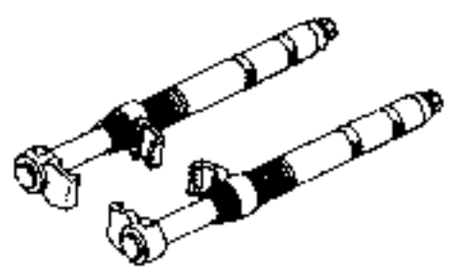	Removing and installing coil spring
ST35652000 Shock absorber attachment	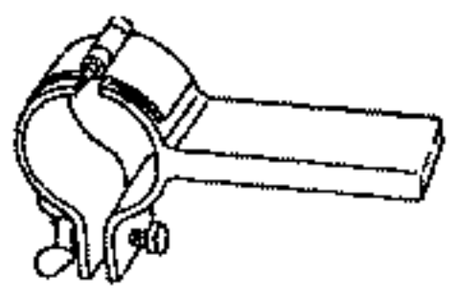	Fixing shock absorber
GG94310000 Flare nut torque wrench	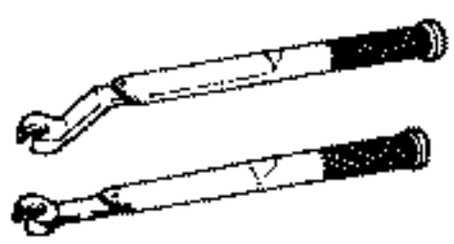	Removing and installing brake piping
ST30031000 Bearing inner race puller		Removing bearing inner race

Preparation (Cont'd)

Tool number Tool name	Description
KV991040S0 C.C.K. holder KV99104010 Attachment set ① Plate ② Guide bolts ③ Nuts ④ Springs ⑤ Center plate ⑥ KV99104020 Adapter A ⑦ KV99104030 Adapter B ⑧ KV99104040 Adapter C ⑨ KV99104050 Adapter D	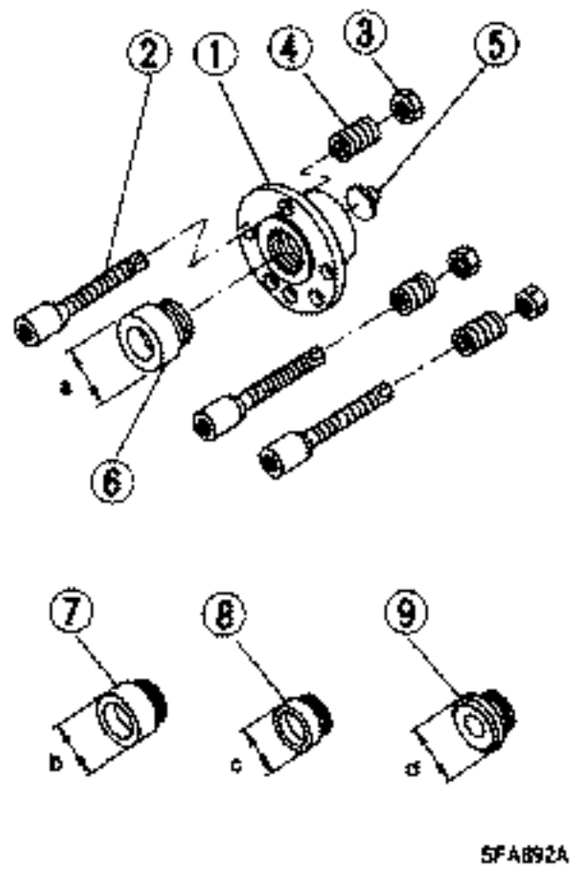 Attaching wheel alignment gauge **a: 72 mm (2.83 in) dia.** **b: 65 mm (2.56 in) dia.** **c: 57 mm (2.24 in) dia.** **d: 53.4 mm (2.102 in) dia.**

Preparation (Cont'd)

COMMERCIAL SERVICE TOOLS

Tool name	Description	
Wheel bearing drift		Removing wheel bearing A: 60 mm (2.36 in) dia. B: 37 mm (1.46 in) dia.
Wheel bearing drift	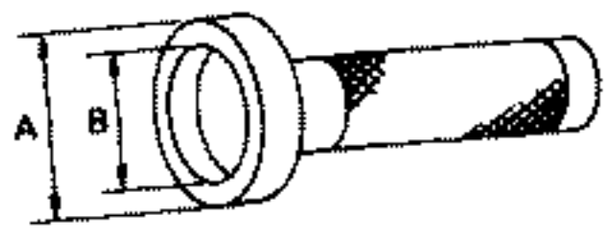	Installing wheel bearing A: 75 mm (2.95 in) dia. B: 65 mm (2.56 in) dia.
Baffle plate drift	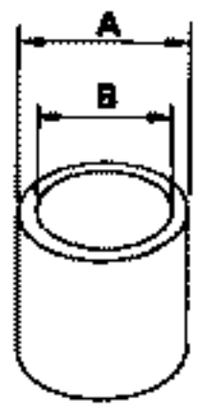	Installing baffle plate A: 125 mm (4.92 in) dia. B: 106 mm (4.17 in) dia.
Tension rod bushing drift	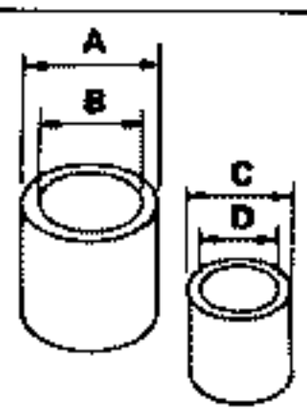	Removing and installing tension rod bushing A: 78 mm (3.07 in) dia. B: 66 mm (2.60 in) dia. C: 62 mm (2.44 in) dia. D: 25 - 55 mm (0.98 - 2.17 in) dia.
Grease seal drift	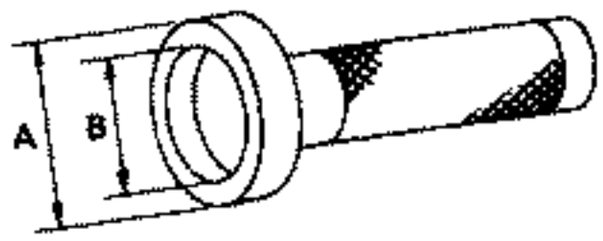	Installing wheel hub grease seal A: 86 mm (3.39 in) dia. B: 76 mm (2.99 in) dia.
Cap drift	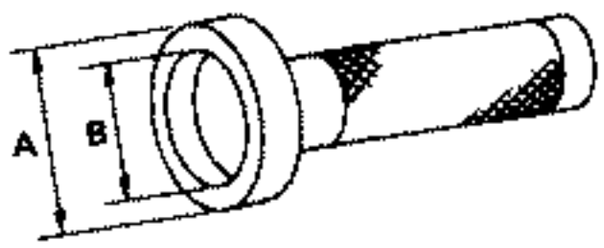	Installing king pin cap A: 60 mm (2.36 in) dia. B: 52 mm (2.05 in) dia.
Bearing drift	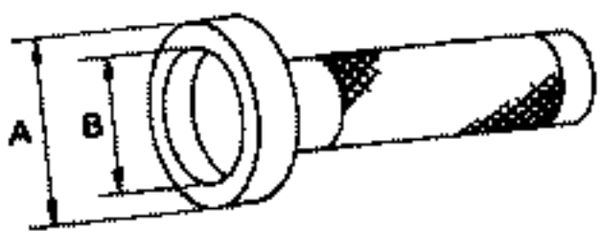	Installing king pin lower bearing A: 57 mm (2.24 in) dia. B: 50 mm (1.97 in) dia.
Bearing drift	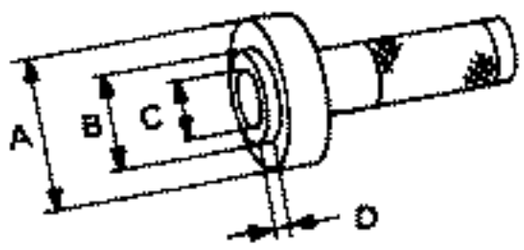	Installing king pin upper bearing A: 57 mm (2.24 in) dia. B: 46 mm (1.81 in) dia. C: 40 mm (1.57 in) dia. D: 2.5 mm (0.098 in)
Grease seal drift	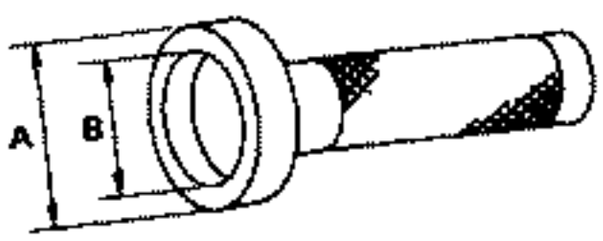	Installing king pin grease seal A: 68 mm (2.68 in) dia. B: 58 mm (2.28 in) dia.

Final tightening for rubber parts must be done under unladen condition*, with tires on ground.

- **Fuel, radiator coolant and engine oil full. Spare tire, jack, hand tools and mats in designated positions.**

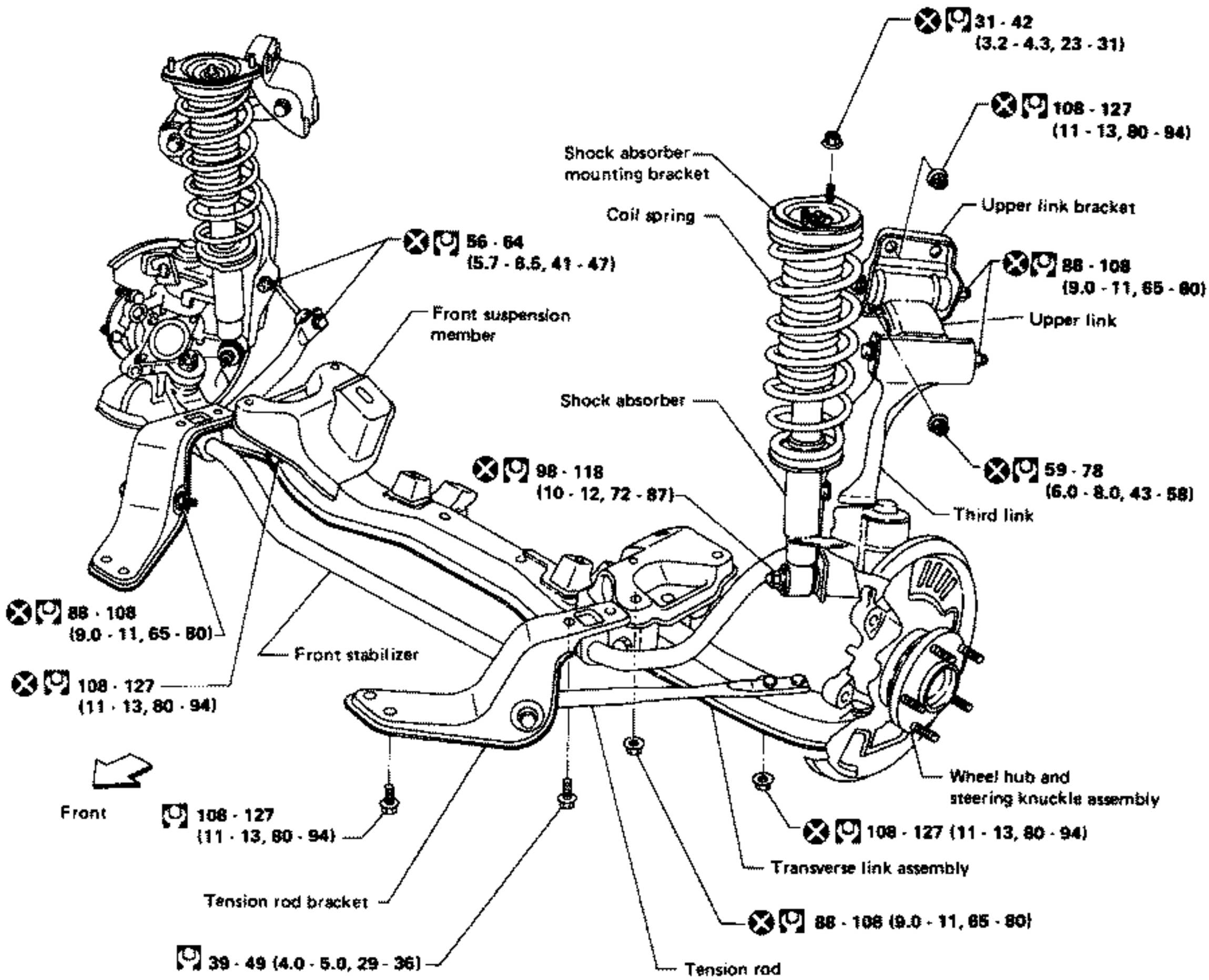

: N·m (kg·m, ft·lb)

SFA736A

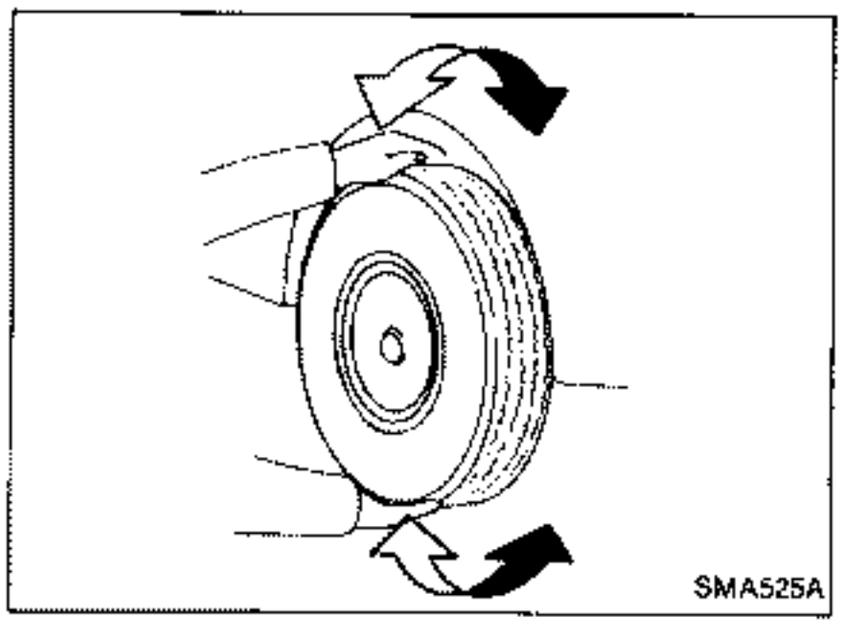

Front Axle and Front Suspension Parts

Check front axle and front suspension parts for looseness, cracks, wear or other damage.

- Shake each front wheel to check for excessive play.

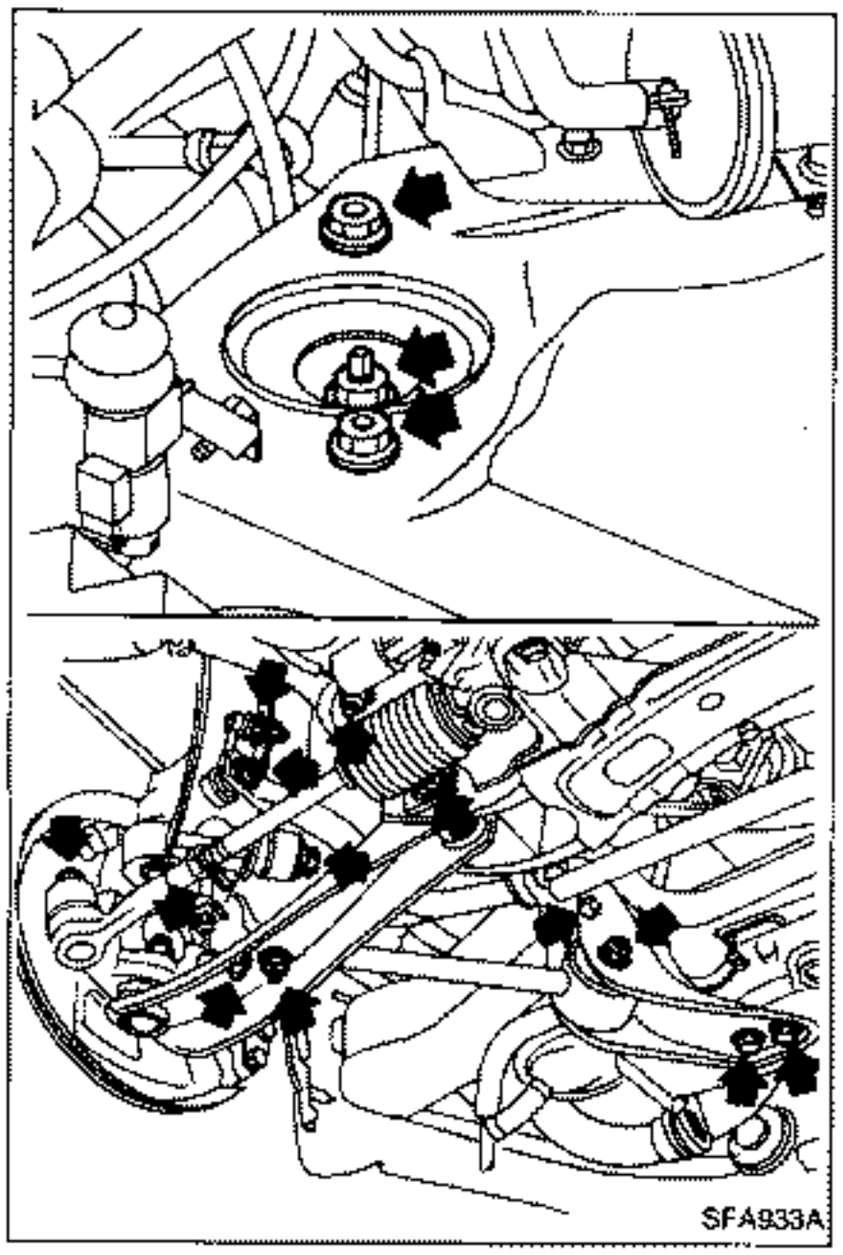

- Retighten all nuts and bolts to the specified torque.
  Tightening torque: Refer to FRONT SUSPENSION.
- Make sure that cotter pin is inserted.

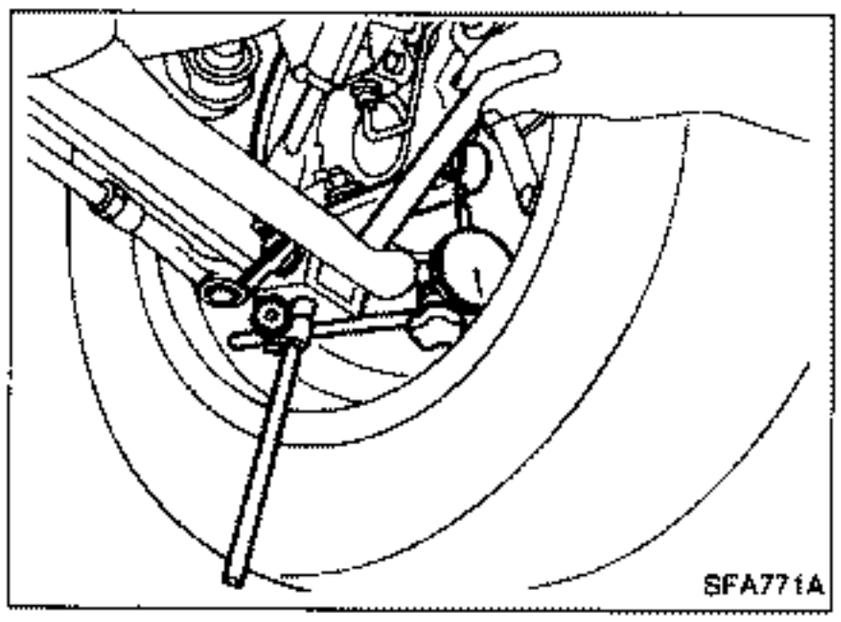

- Check suspension ball joint end play.

(1) Jack up front of vehicle and set the stands.
(2) Clamp dial indicator onto transverse link and place indicator tip on lower edge of brake caliper.
(3) Make sure front wheels are straight and brake pedal is depressed.
(4) Place a pry bar between transverse link and inner rim of road wheel.
(5) While pushing and releasing pry bar, observe maximum dial indicator value.
  Vertical end play: 0 mm (0 in)
(6) If not to above specification, remove and recheck ball joint.

Front Axle and Front Suspension Parts (Cont'd)

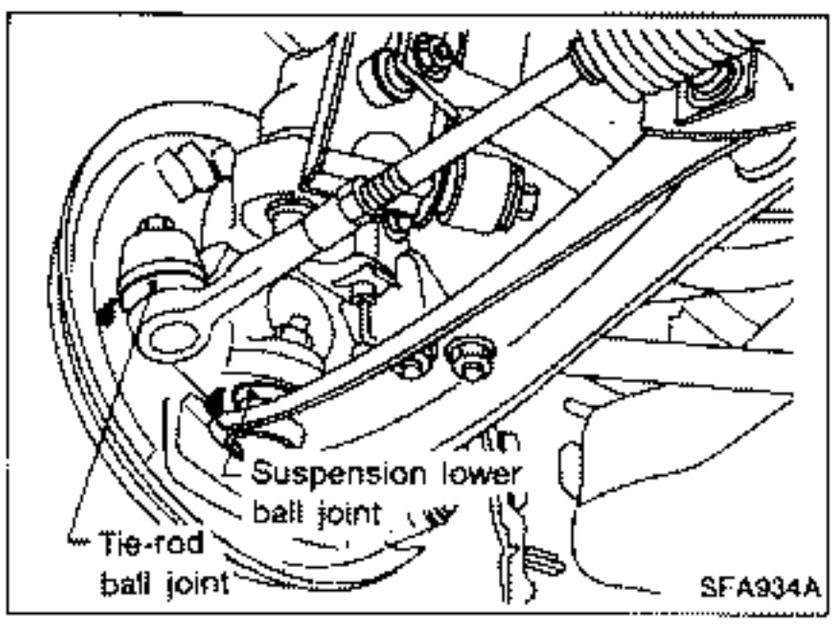

- Check suspension lower ball joint and tie-rod ball joint for grease leakage, and dust cover for cracks or other damage.

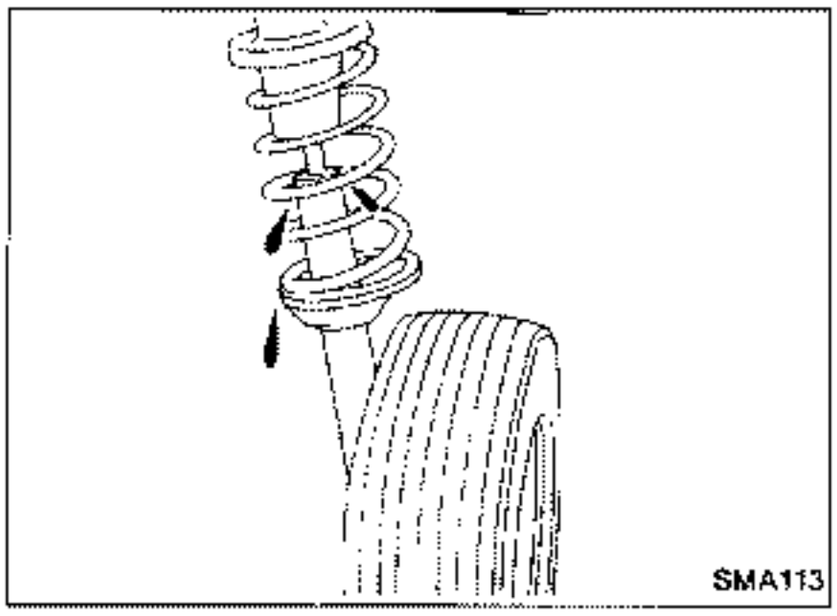

- Check shock absorber for oil leakage or other damage.

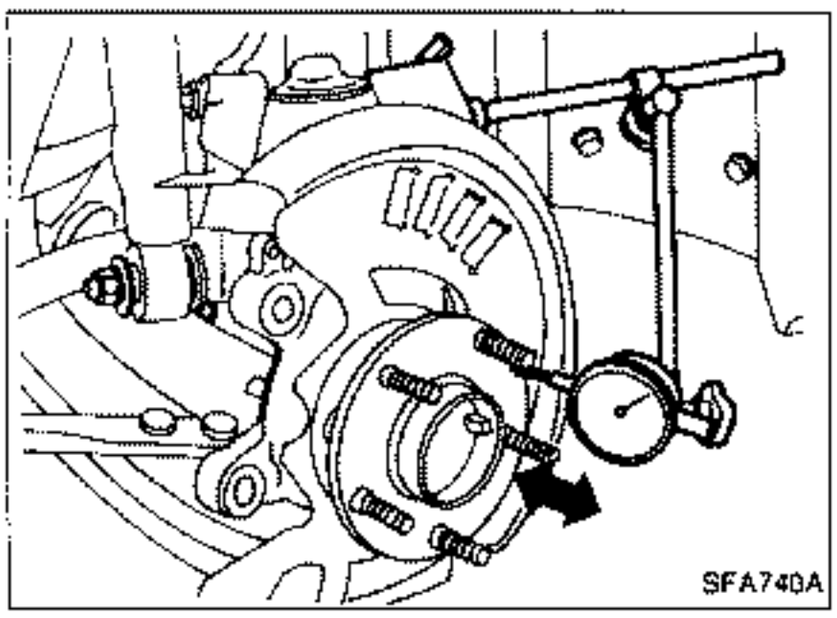

Front Wheel Bearing

- Check wheel bearings for smooth operation.
- Check axial end play.
  Axial end play: 0.05 mm (0.0020 in) or less
- If axial end play is not within specification or wheel bearing does not turn smoothly, replace wheel bearing assembly. Refer to FRONT AXLE — Wheel Hub and Knuckle.

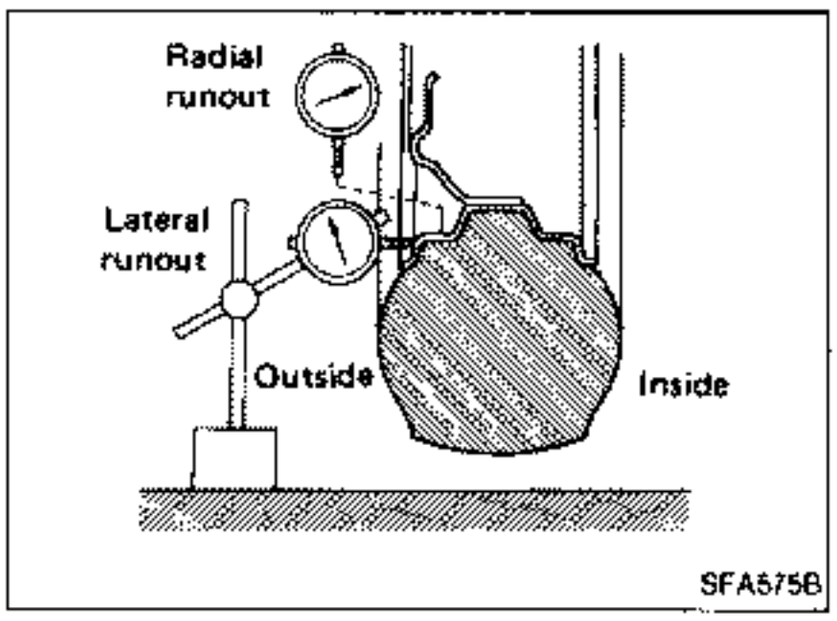

Front Wheel Alignment

Before checking front wheel alignment, be sure to make a preliminary inspection.

PRELIMINARY INSPECTION

Make the following checks. Adjust, repair or replace if necessary.

- Check tires for wear and improper inflation.
- Check front wheel bearings for looseness.
- Check wheel runout.
  Wheel runout: Refer to S.D.S.
- Check front suspension for looseness.
- Check steering linkage for looseness.
- Check that front shock absorbers work properly.
- Check vehicle posture (Unladen).
  ("Unladen": Fuel, radiator coolant and engine oil full. Spare tire, jack, hand tools and mats in designated positions.)

Front Wheel Alignment (Cont'd)

CAMBER, CASTER AND KINGPIN INCLINATION

Camber, caster and kingpin inclination are preset at factory and cannot be adjusted.

1. Set vehicle on turning radius gauge.

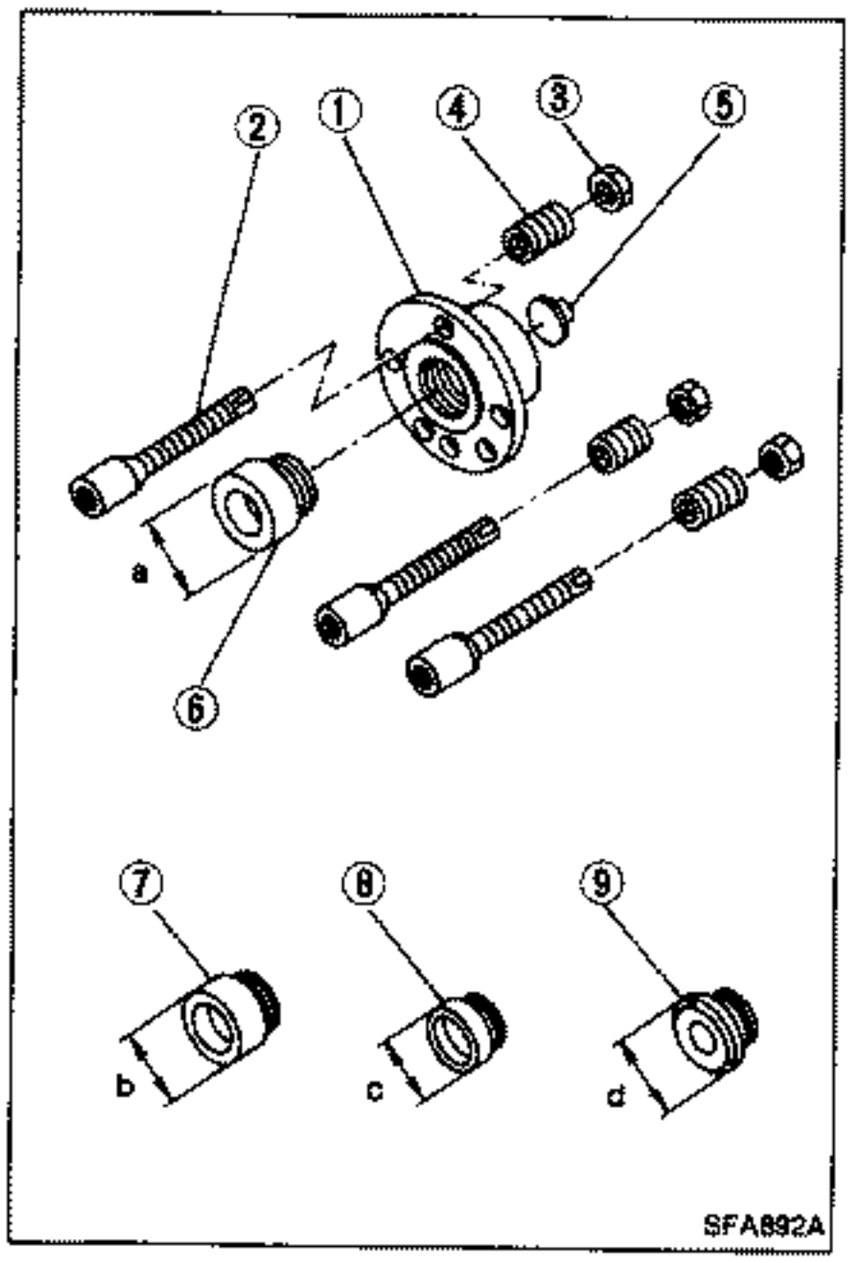

2. Mount Tool as follows.
   Tool number:
   KV991040S0
   KV99104010 ① **to** ⑤
   KV99104020 ⑥
   KV99104030 ⑦
   KV99104040 ⑧
   KV99104050 ⑨

a. Select adapter which corresponds with wheel or hub shape from four types ⑥ to ⑨.
b. Screw selected adapter in until it contacts plate ①.

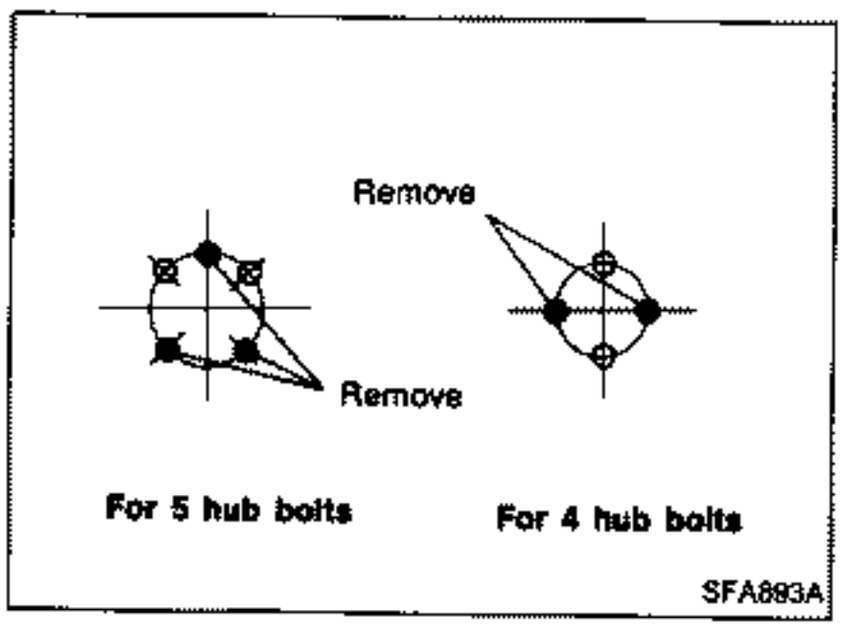

c. Remove wheel nuts.

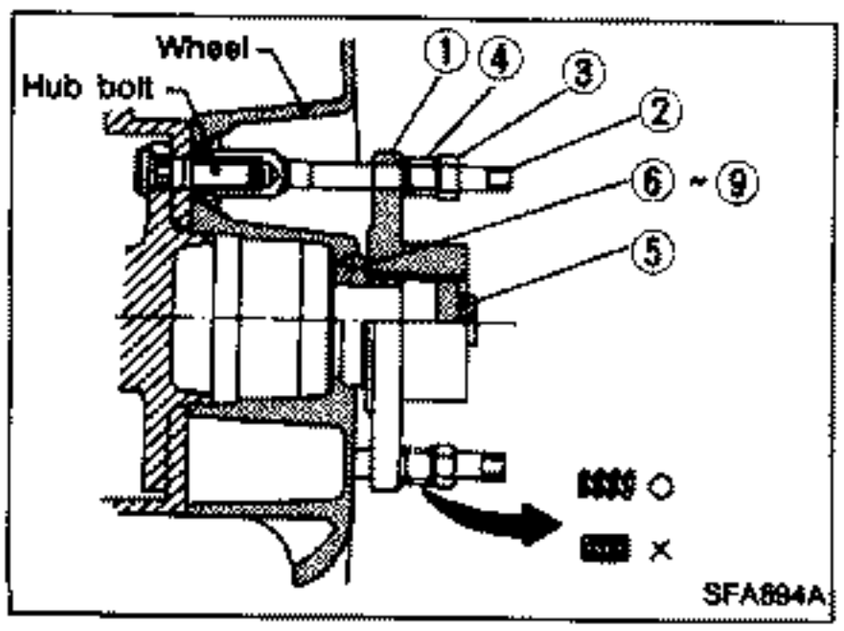

d. Install guide bolts ② to where wheel nuts were removed and tighten them by hand.
e. Install plate and adapter assembly to guide bolts ②.
f. Install springs ④ onto guide bolts ②. Then tighten nuts ③ evenly until a little before springs ④ are completely compressed.
g. Install center plate ⑤.
h. Mount wheel alignment gauge on attachment plate.

Front Wheel Alignment (Cont'd)

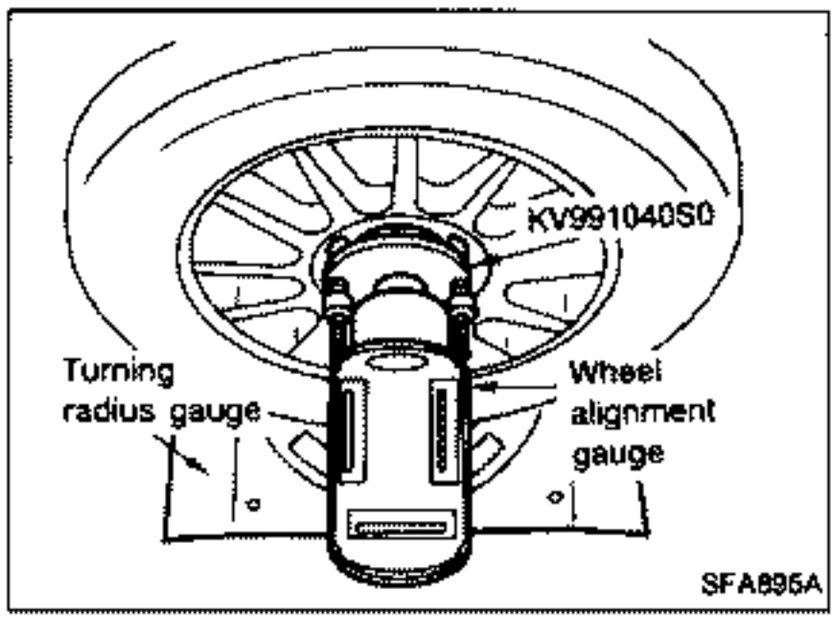

3. Measure camber, caster and kingpin inclination of both right and left wheels with a suitable alignment gauge.
   Camber: –1°35′ to –0°05′
   Caster: 9°00′ - 10°30′
   Kingpin inclination: 12°10′ - 13°40′
4. If camber, caster and kingpin inclination are not within specification, inspect and replace any damaged or worn front suspension parts.

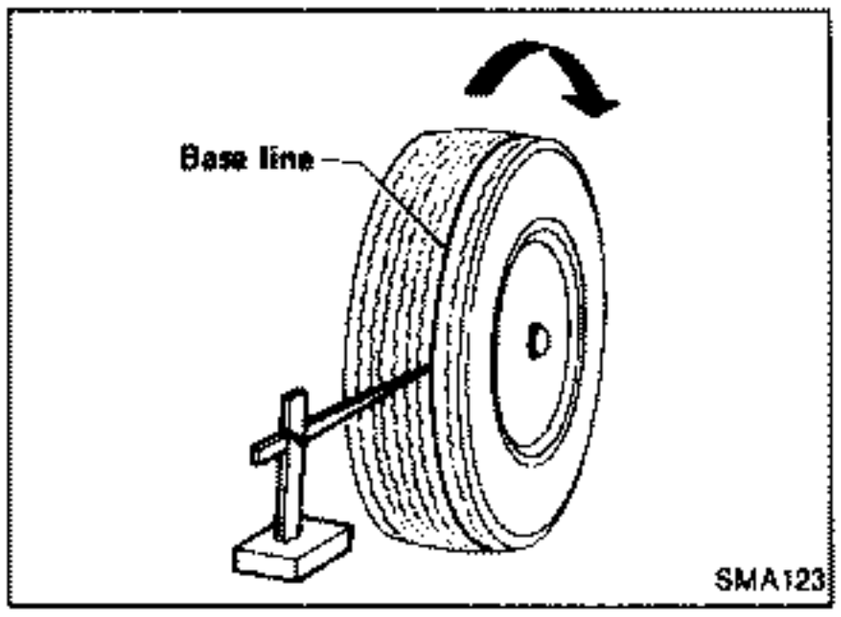

TOE-IN

1. Draw a base line on tread surface of tires.
- After lowering front of vehicle, move it up and down to eliminate friction, and set wheels in straight-ahead position.

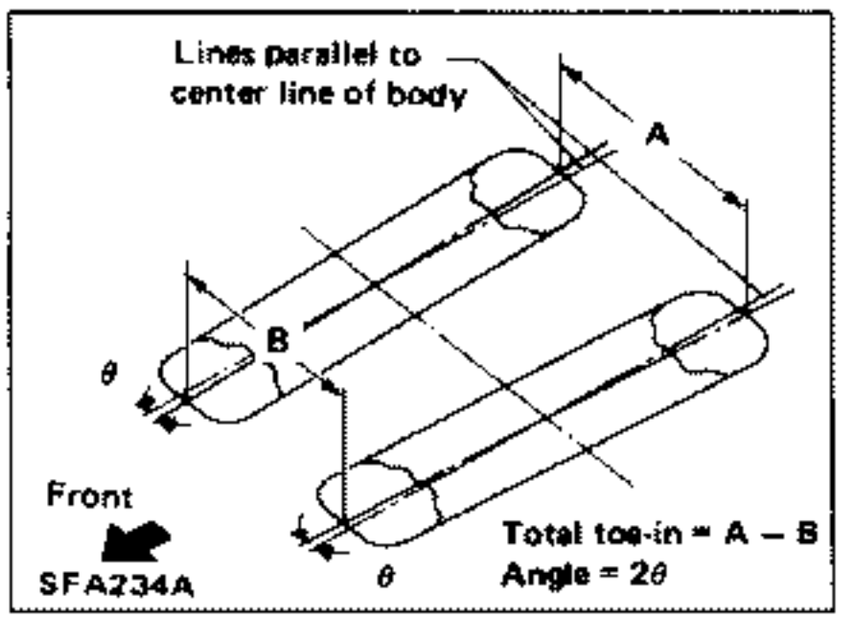

2. Measure toe-in.
- Measure distance "A" and "B" at same height as hub center.
   Total toe-in:
   A – B: 0 - 2 mm (0 - 0.08 in)
   2θ: 0′ - 11′

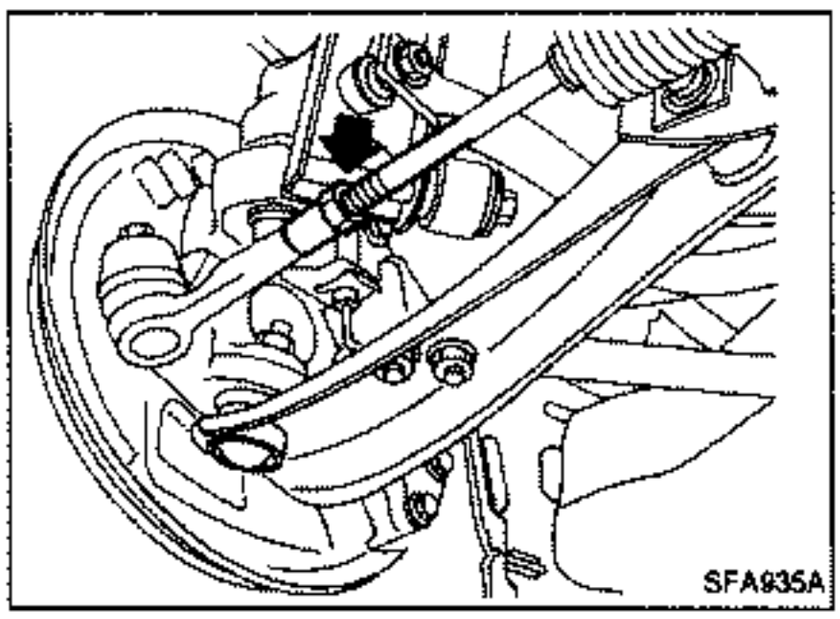

3. Adjust toe-in by varying length of steering tie-rods.
(1) Loosen lock nuts.
(2) Adjust toe-in by turning tie-rod forward or backward.

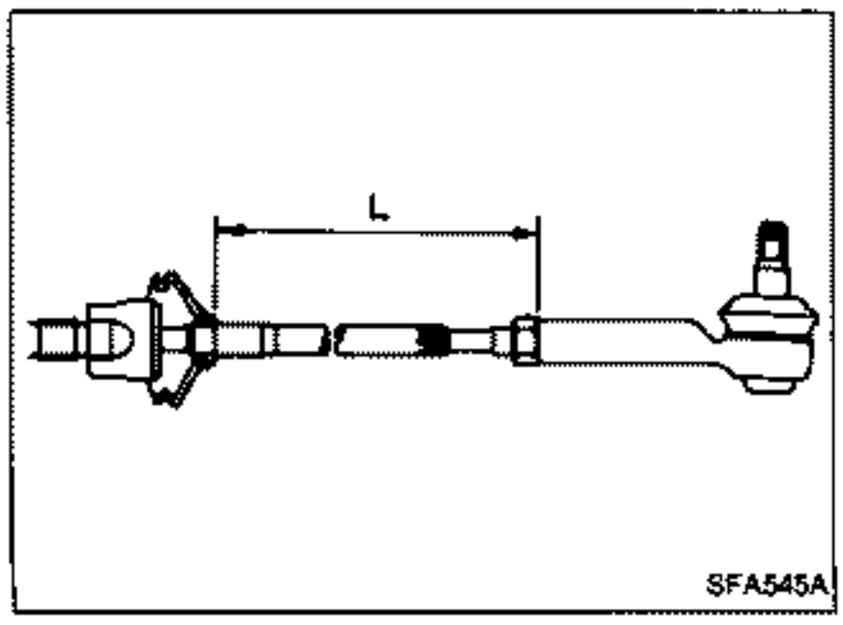

Make sure both tie-rods are the same length.
Standard length "L":
155 mm (6.10 in)

(3) Tighten lock nuts to the specified torque.
[O]: 78 - 98 N·m
(8.0 - 10.0 kg-m, 58 - 72 ft-lb)

Front Wheel Alignment (Cont'd)

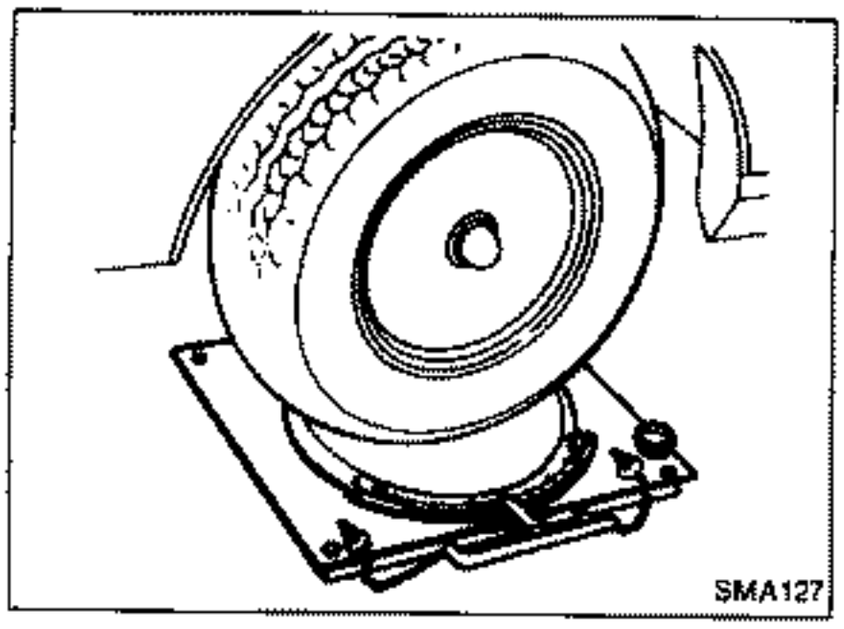

FRONT WHEEL TURNING ANGLE

1. Set wheels in straight-ahead position and then move vehicle forward until front wheels rest on turning radius gauge properly.

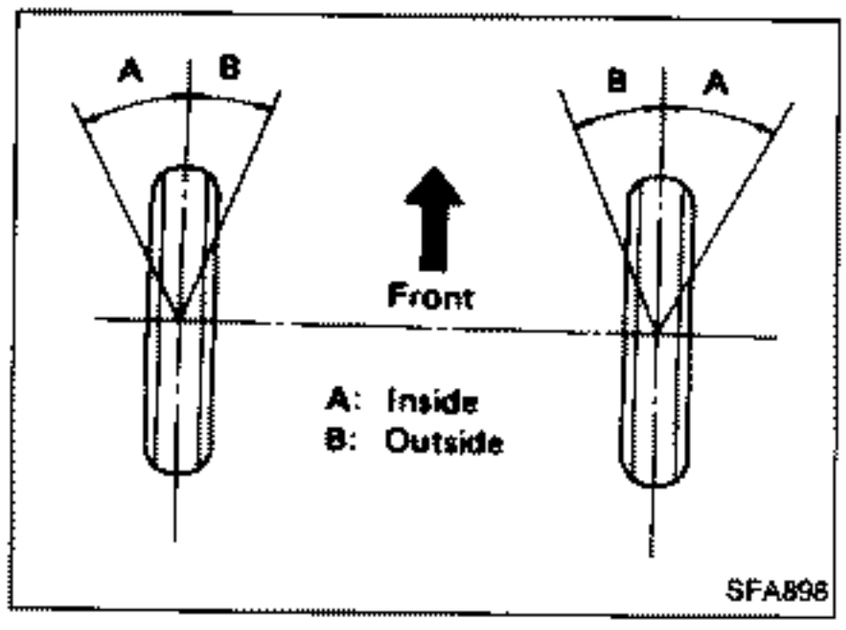

2. Rotate steering wheel fully to the right or left with a force of 98 to 147 N (10 to 15 kg, 22 to 33 lb) while engine is running at idle and measure turning angle.

Do not hold the steering wheel at full lock for more than 15 seconds.

Wheel turning angle (Full turn):

Inside wheel (A):	**32° - 36°**
Outside wheel (B):	**27° - 31°**

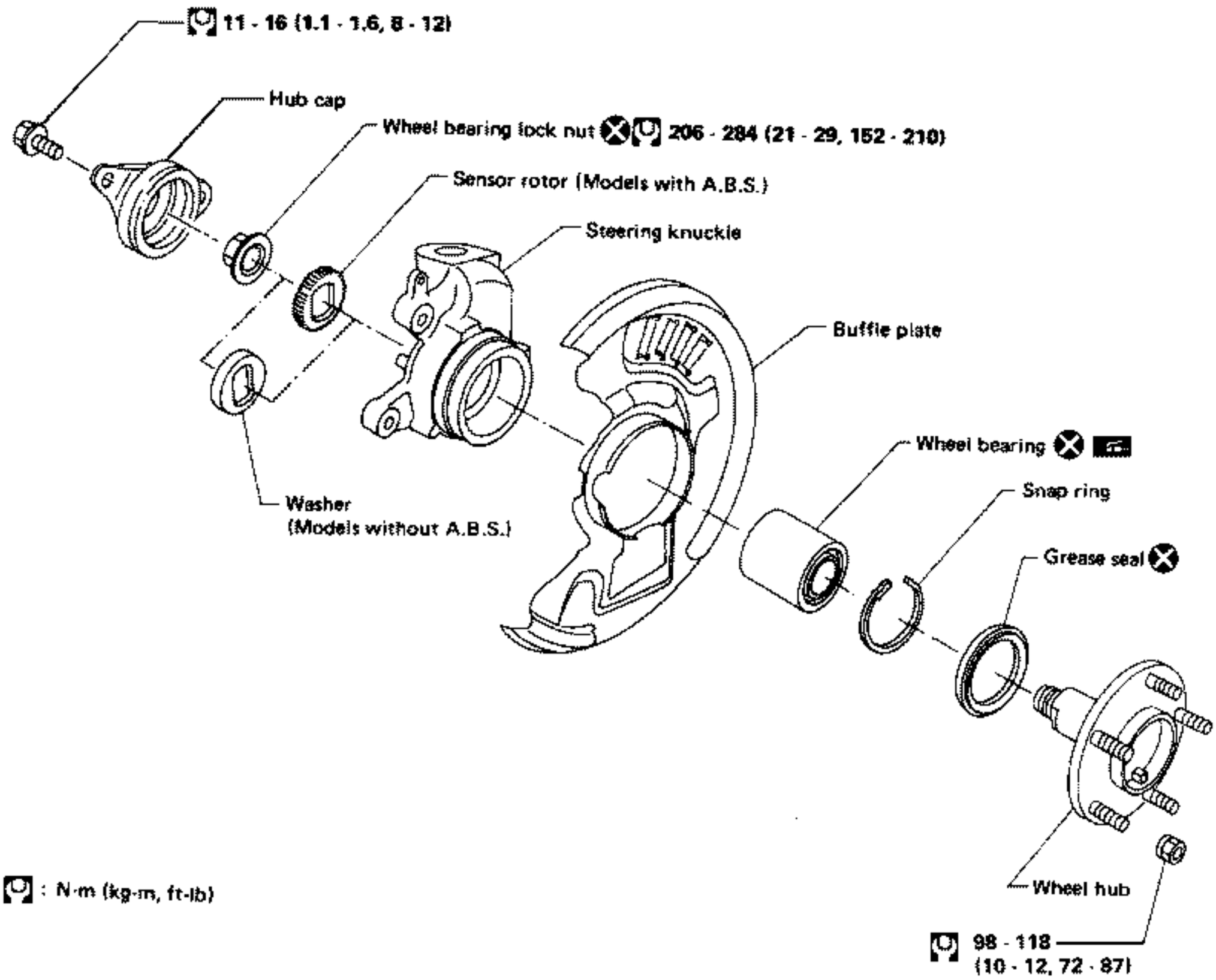

: N·m (kg·m, ft-lb)

SFA891A

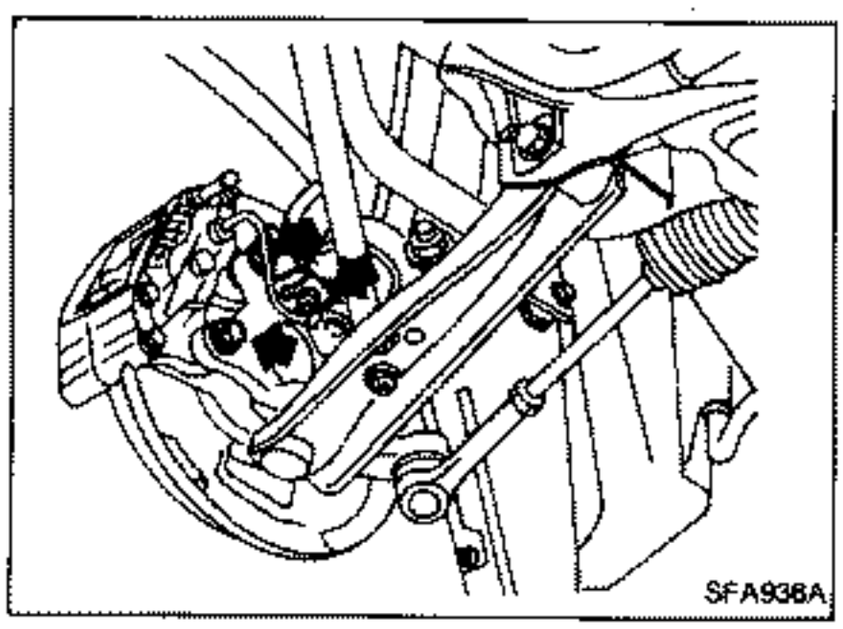

Removal

CAUTION:
Wheel bearing usually does not require maintenance. If any of the following symptoms are noted, replace wheel bearing assembly.

- **Growling noise is emitted from wheel bearing during operation.**
- **Wheel bearing drags or turns roughly when hub is turned by hand.**
- Remove brake caliper assembly and rotor.

Brake hose need not be disconnected from brake caliper. Be careful not to depress brake pedal, or piston will pop out.
Do not pull or twist brake hose.

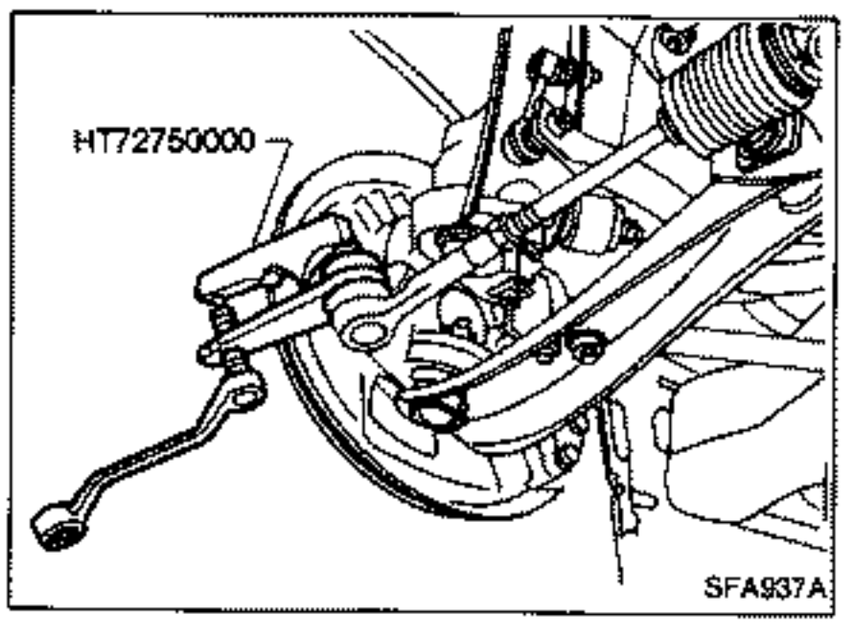

- Remove tie-rod ball joint and lower ball joint with Tool.

CAUTION:
Steering knuckle is made from aluminum alloy.
Be careful not to hit steering knuckle.

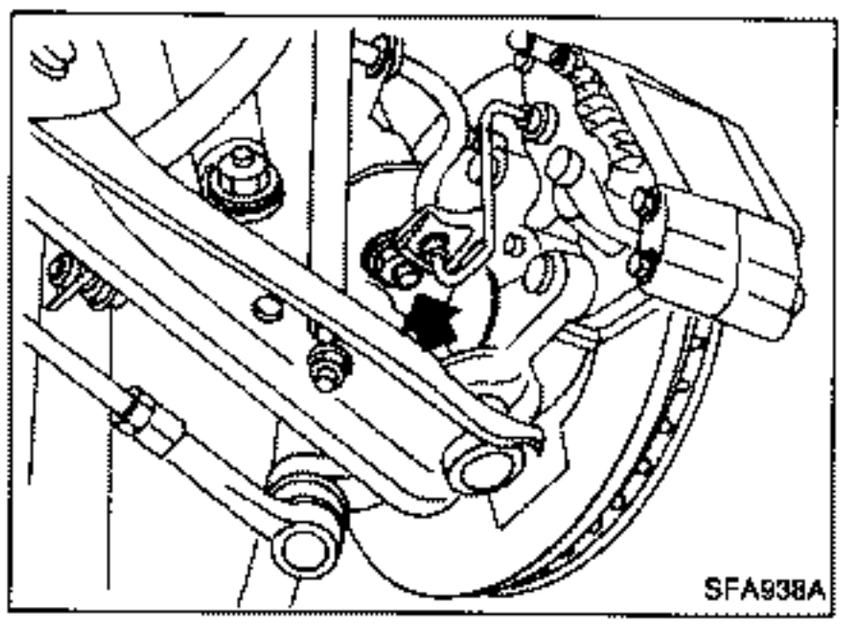

- Remove kingpin lower nut then remove steering knuckle assembly.

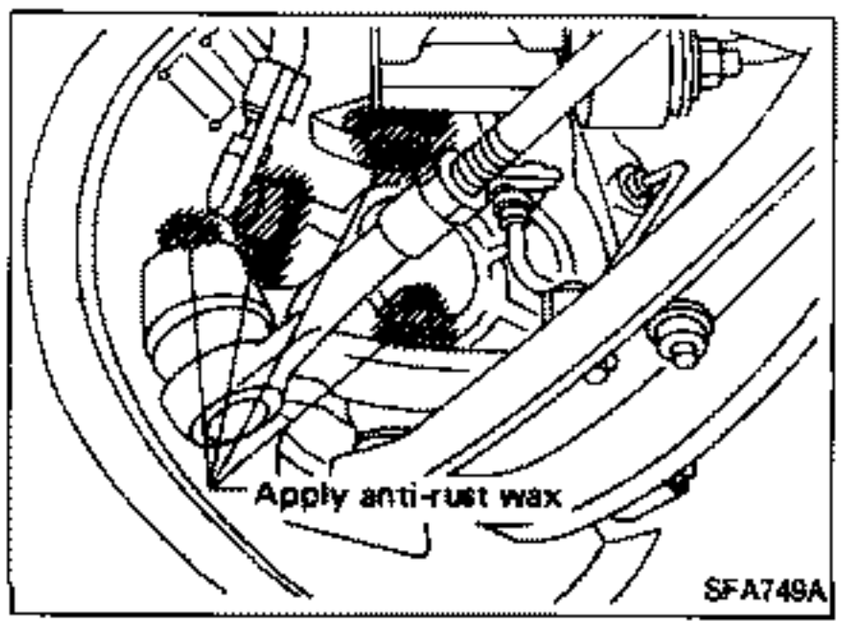

Installation

- Install steering knuckle assembly.
- Apply anti-rust wax as follows:
  - Portions around lower ball joint connections
  - Portions around tie-rod ball joint connections
  - Portions around kingpin lower nut location
  - Portions around A.B.S. sensor connection

Disassembly

CAUTION:
When removing wheel bearing from steering knuckle, replace wheel bearing assembly (outer race, inner races and grease seal) with a new one.

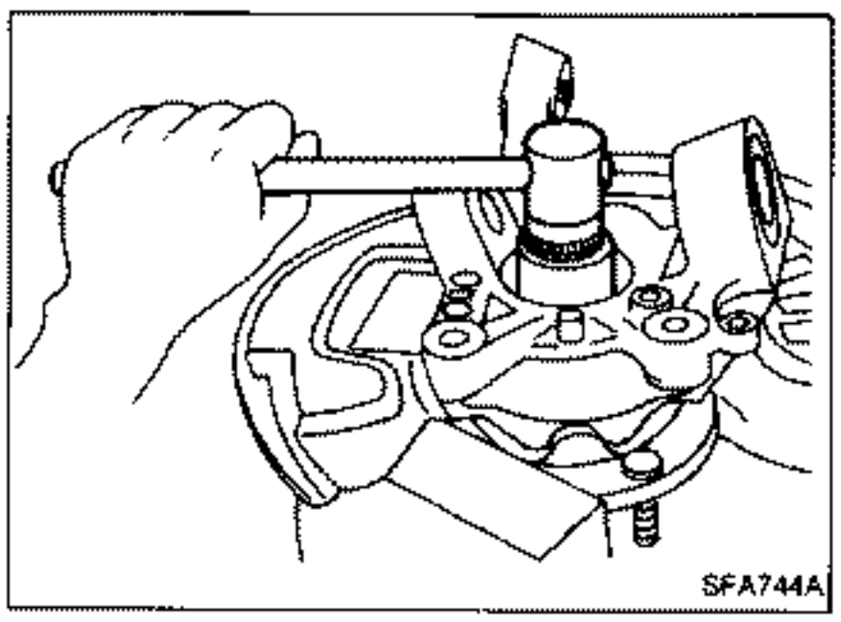

- Remove hub cap and wheel bearing lock nut.

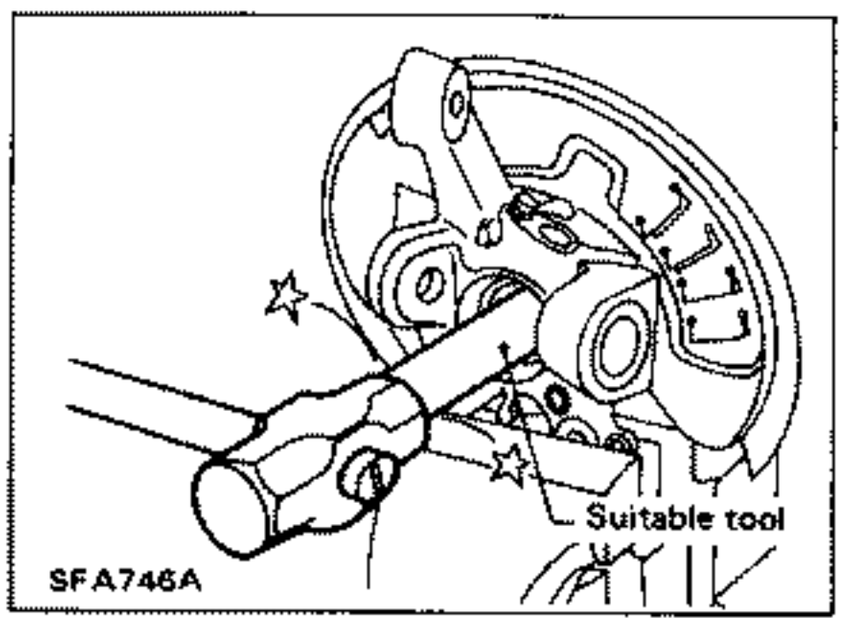

- Remove wheel hub with a suitable tool.

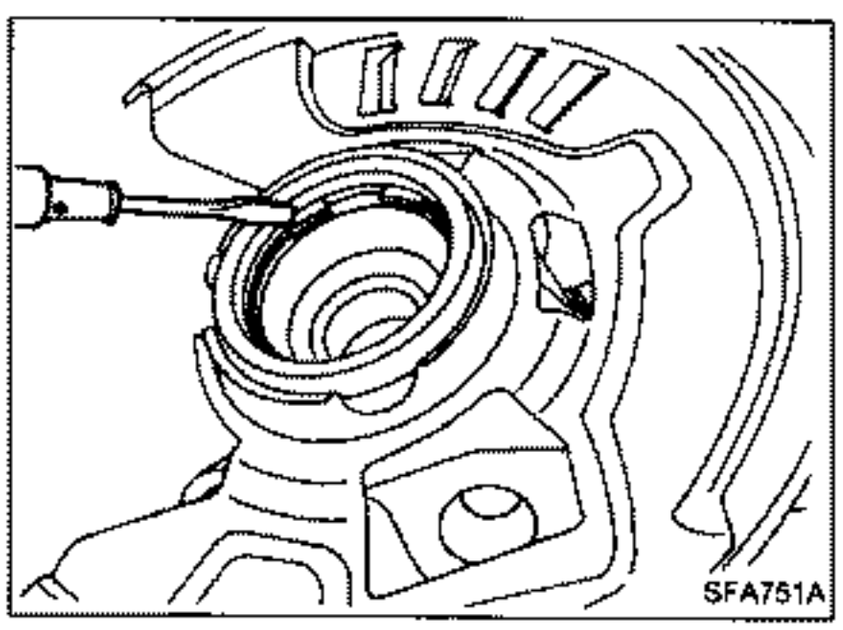

- Remove circular clip with a suitable tool.

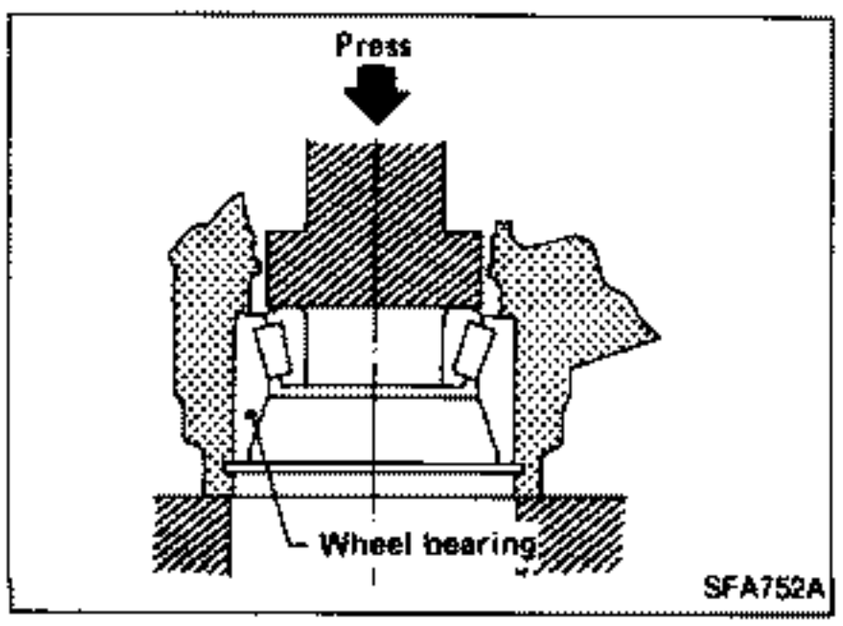

- Press out wheel bearing assembly from steering knuckle.

Disassembly (Cont'd)

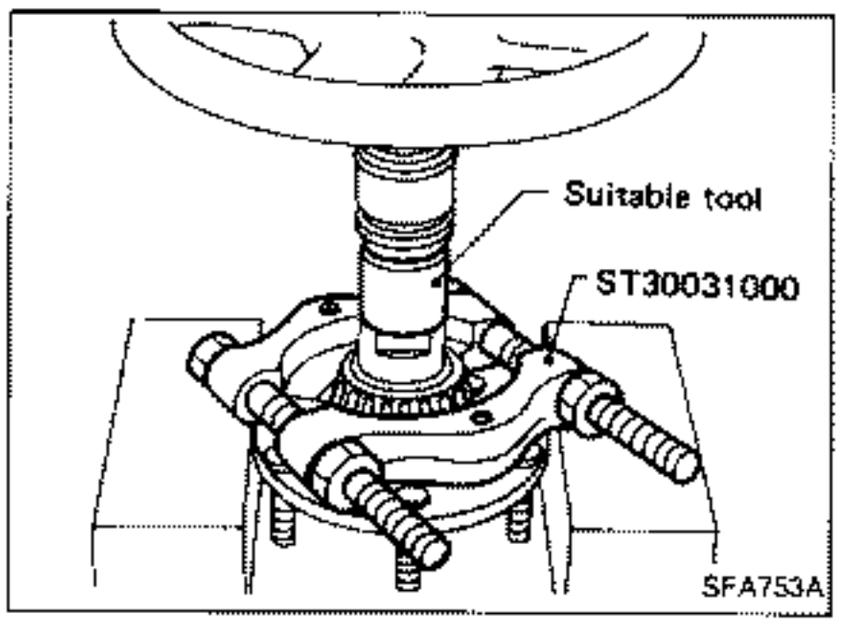

- Drive out wheel bearing inner race (to outside) from wheel hub, then remove grease seal.

Inspection

WHEEL HUB AND STEERING KNUCKLE

Check wheel hub and steering knuckle for any cracks.

CIRCULAR CLIP

Check circular clip for wear or cracks.
Replace if necessary.

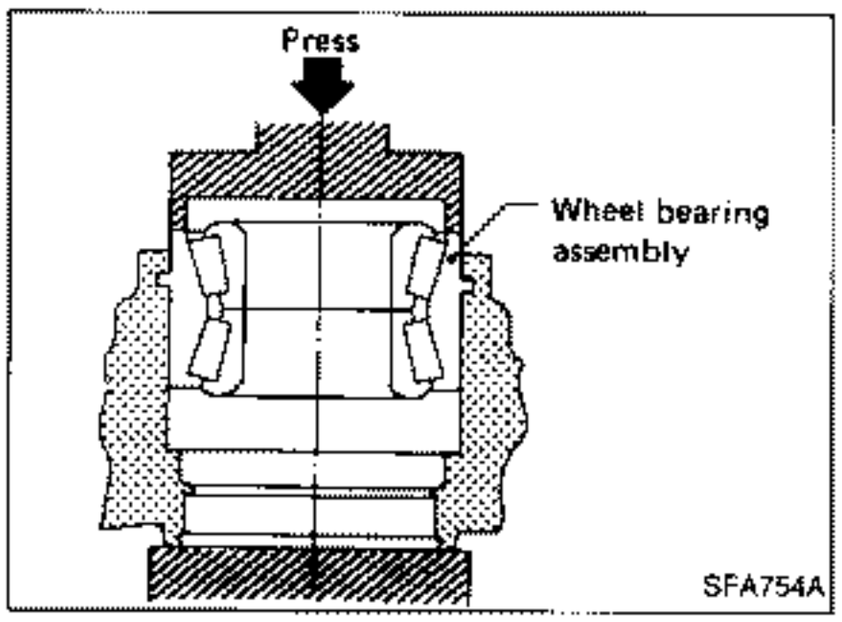

Assembly

1. Press new wheel bearing assembly into steering knuckle from outside of steering knuckle.
   Maximum load P:
   34.3 kN (3.5 t, 3.9 US ton, 3.44 Imp ton)

CAUTION:

- **Do not press inner race of wheel bearing assembly.**
- **Do not apply oil or grease to mating surfaces of wheel bearing outer race and wheel hub.**

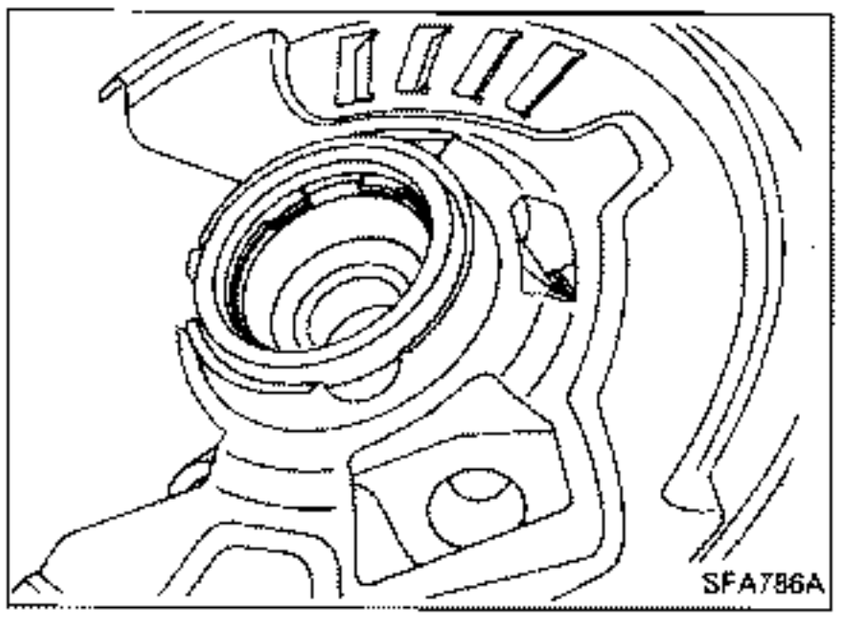

2. Install circular clip into groove of steering knuckle.

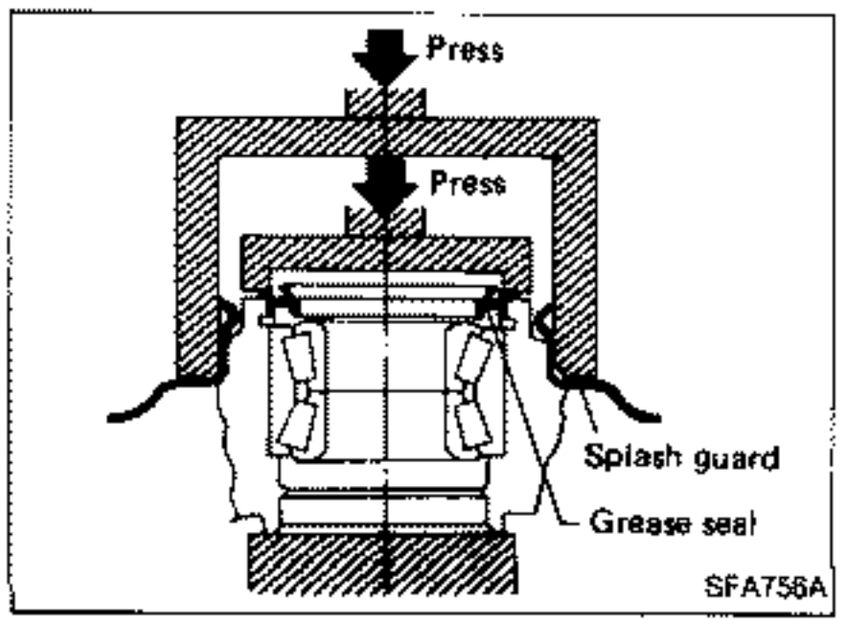

3. Apply multi-purpose grease to sealing lip.
4. Install grease seal.
   Maximum load P:
   10 kN (1 t, 1.1 US ton, 1.0 Imp ton)
5. Install splash guard.

Assembly (Cont'd)

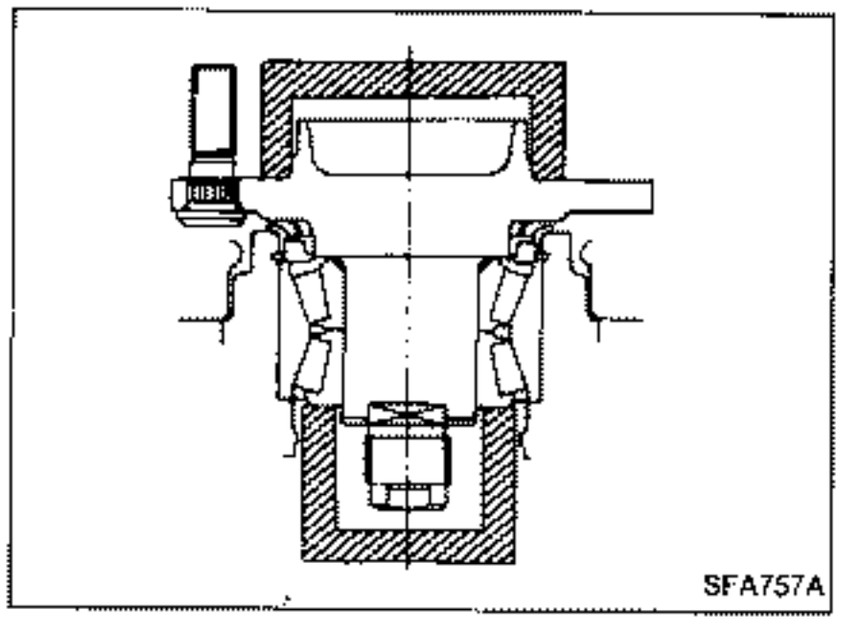

6. Press wheel hub into steering knuckle.
   Maximum load P:
   29 kN (3 t, 3.3 US ton, 3.0 Imp ton)
7. Tighten wheel bearing lock nut to the specified torque.
   [O]: 206 - 284 N·m (21 - 29 kg-m, 152 - 210 ft-lb)

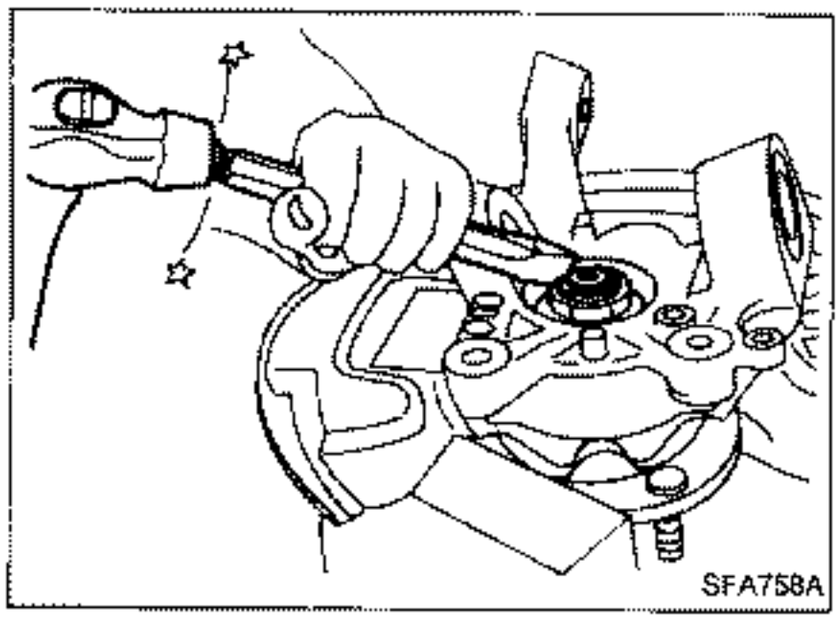

8. Stake wheel bearing lock nut.

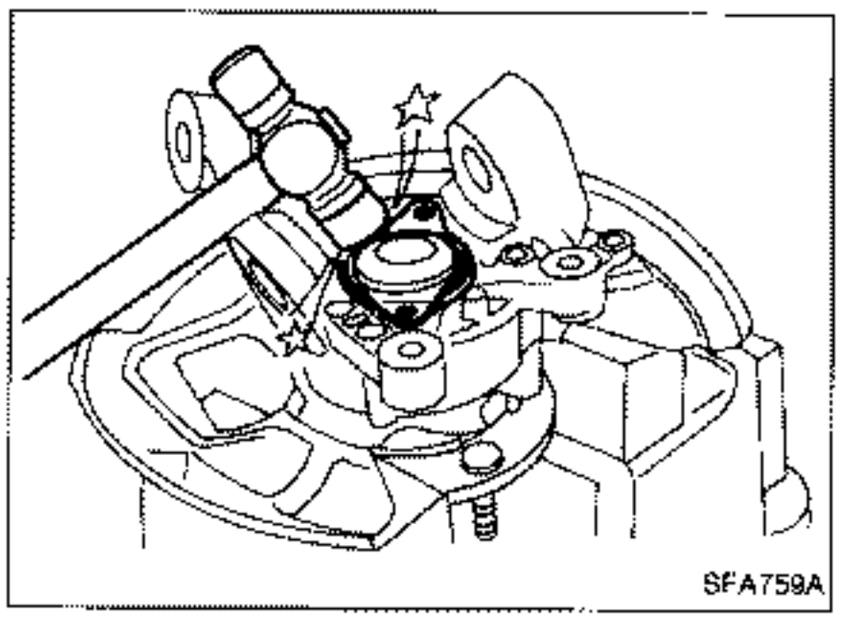

9. Install hub cap.
   Drive hub cap onto steering knuckle by lightly tapping with a plastic hammer. After hub cap is in close contact with steering knuckle, tighten bolts.

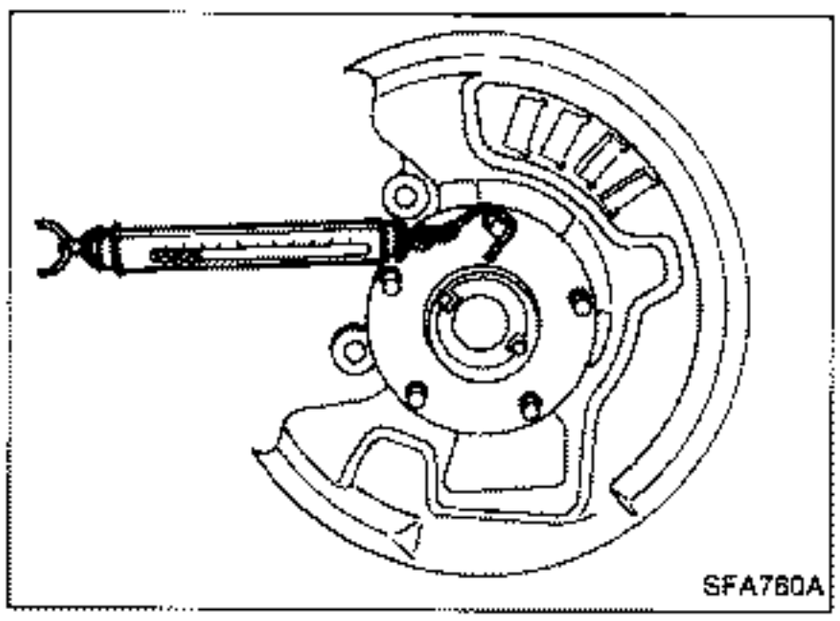

10. Check wheel bearing preload and axial end play.

Before checking, spin wheel hub at least 10 revolutions in both directions.

Turning torque:
0.34 - 2.16 N·m (3.5 - 22.0 kg-cm, 3.0 - 19.1 in-lb)
(NSK bearing)
0.44 - 3.33 N·m (4.5 - 34.0 kg-cm, 3.9 - 29.5 in-lb)
(NTN bearing)

As measured at wheel hub bolt:
5.9 - 37.3 N (0.6 - 3.8 kg, 1.3 - 8.4 lb)
(NSK bearing)
7.8 - 57.9 N (0.8 - 5.9 kg, 1.8 - 13.0 lb)
(NTN bearing)

Axial end play:
0.05 mm (0.0020 in) or less

Final tightening for rubber parts must be done under unladen condition, with tires on ground.*
* Fuel, radiator coolant and engine oil full.
Spare tire, jack, hand tools and mats in designated positions.

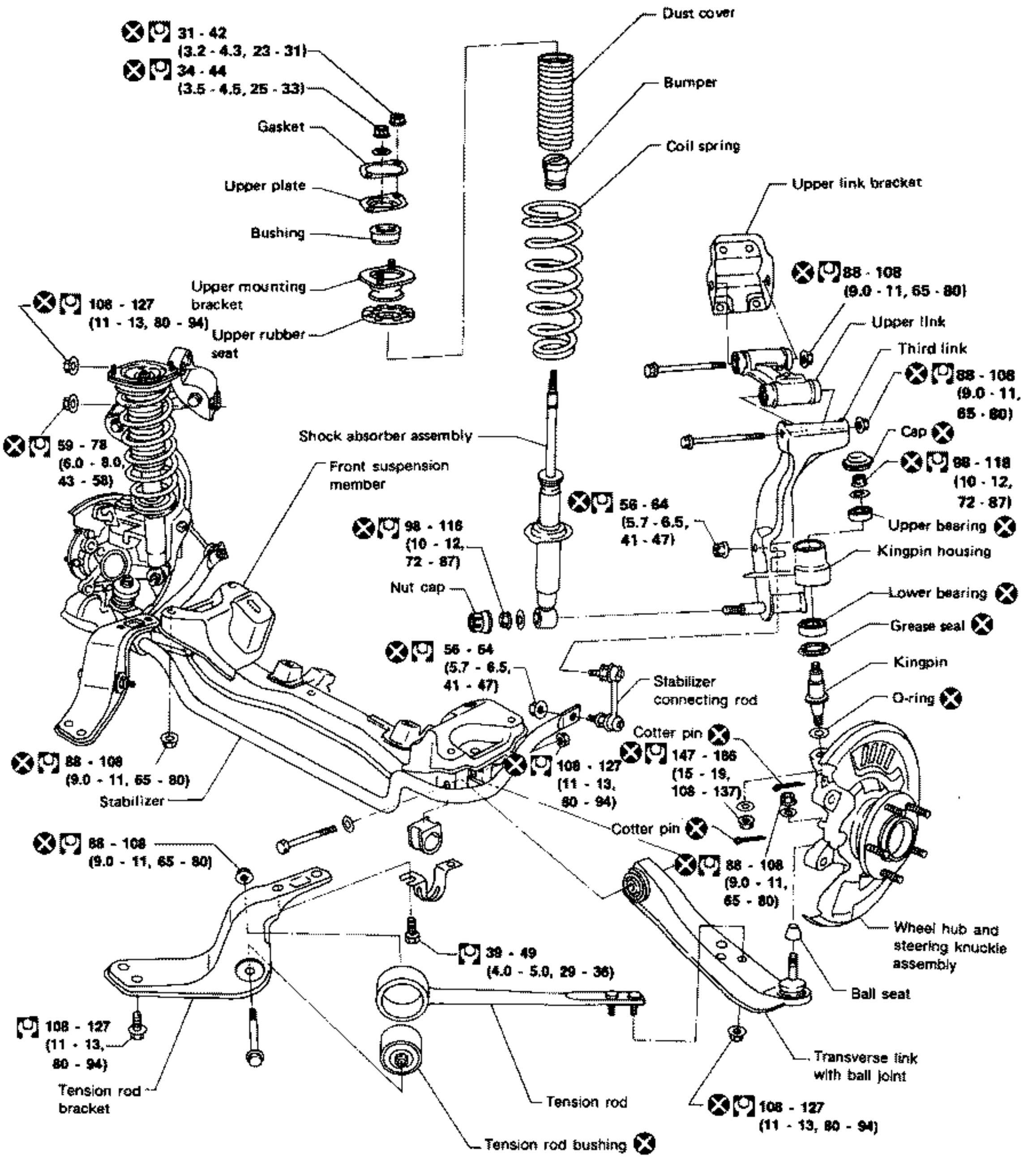

: N·m (kg-m, ft-lb)

SFA890A

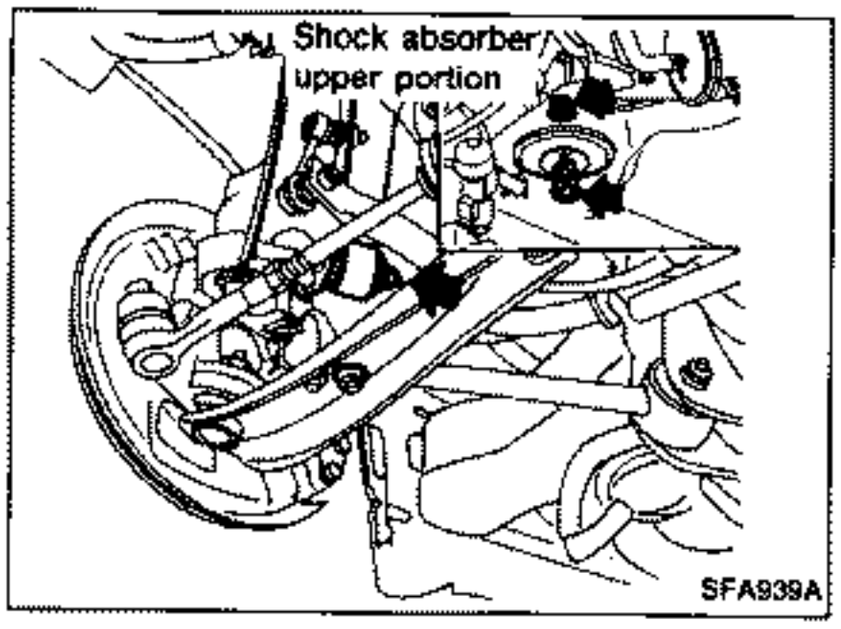

Removal

- Remove shock absorber fixing bolt and nut (to hoodledge).

Do not remove piston rod lock nut.

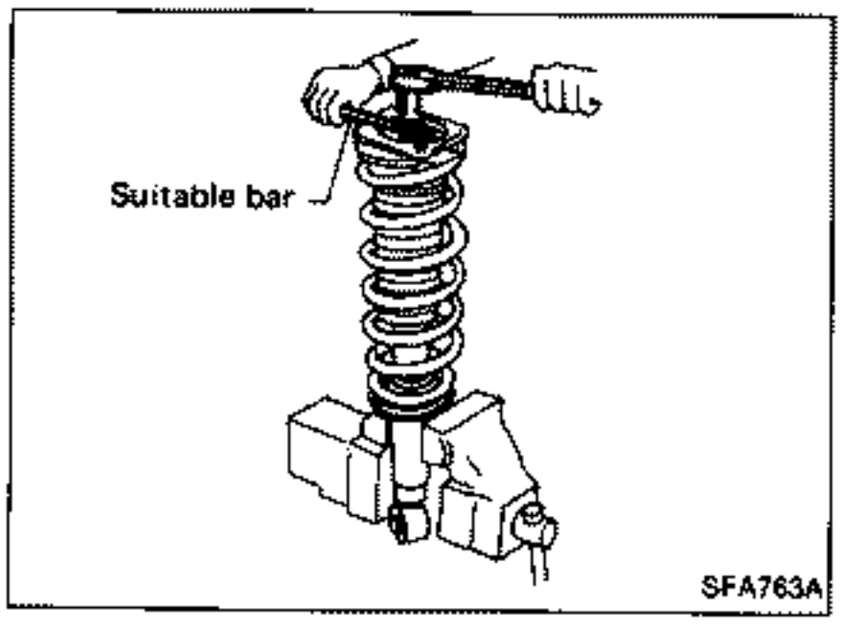

Disassembly

1. Set shock absorber on vise with Tool, then loosen piston rod lock nut.

Do not remove piston rod lock nut.

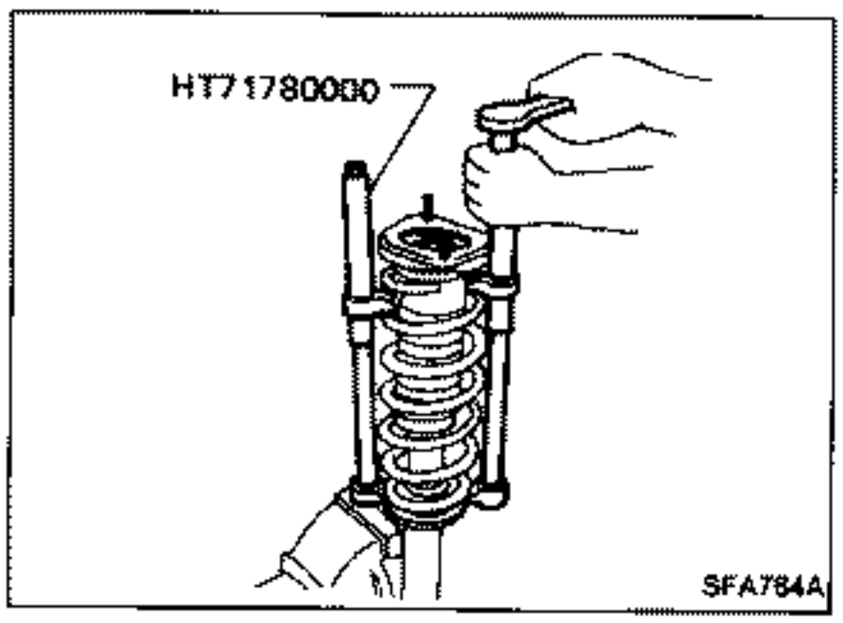

2. Compress spring with Tool so that shock absorber mounting insulator can be turned by hand.

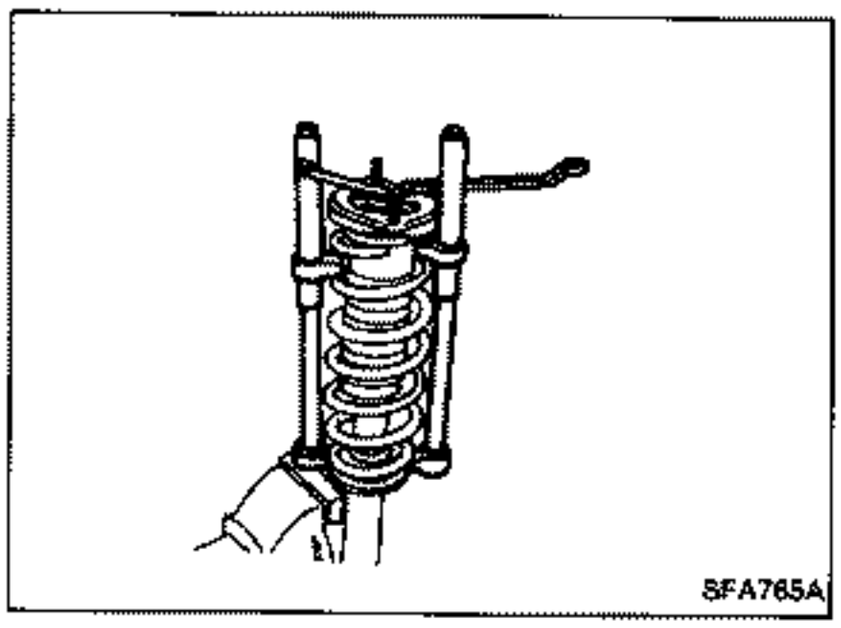

3. Remove piston rod lock nut.

Inspection

SHOCK ABSORBER ASSEMBLY

- Check for smooth operation through a full stroke, both compression and extension.
- Check for oil leakage occurring on welded or gland packing portions.
- Check piston rod for cracks, deformation or other damage. Replace if necessary.

Inspection (Cont'd)

MOUNTING INSULATOR AND RUBBER PARTS

Check cemented rubber-to-metal portion for separation or cracks. Check rubber parts for deterioration.
Replace if necessary.

COIL SPRING

Check for cracks, deformation or other damage. Replace if necessary.

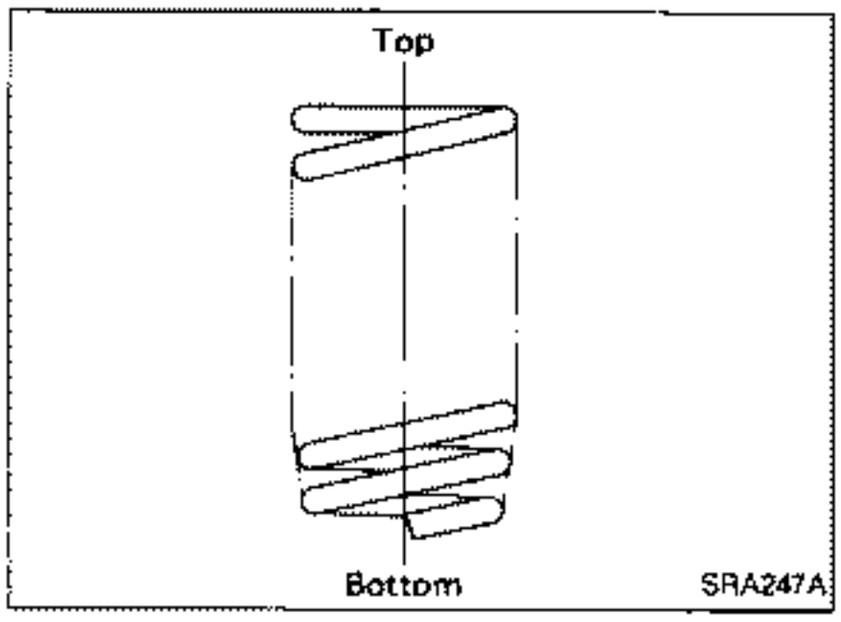

Assembly

- When installing coil spring, be careful not to reverse top and bottom direction. (Top end is flat.)

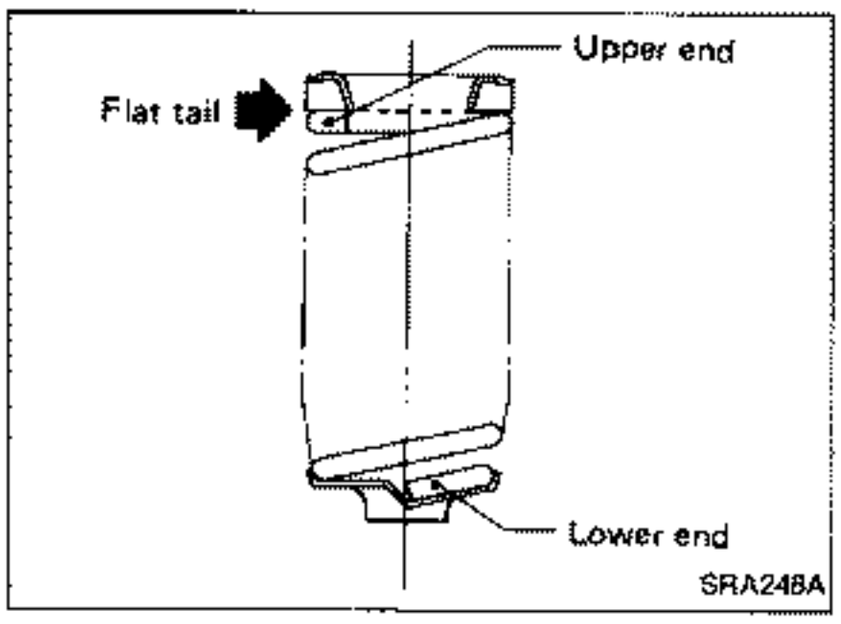

- When installing coil spring on shock absorber, it must be positioned as shown in figure at left.

Removal

CAUTION:
Kingpin bearing usually does not require maintenance. If any of the following symptoms are noted, replace kingpin bearing assembly.

- **Growling noise is emitted from kingpin bearing during operation.**
- **Kingpin bearing drags or turns roughly when steering knuckle is turned by hand.**

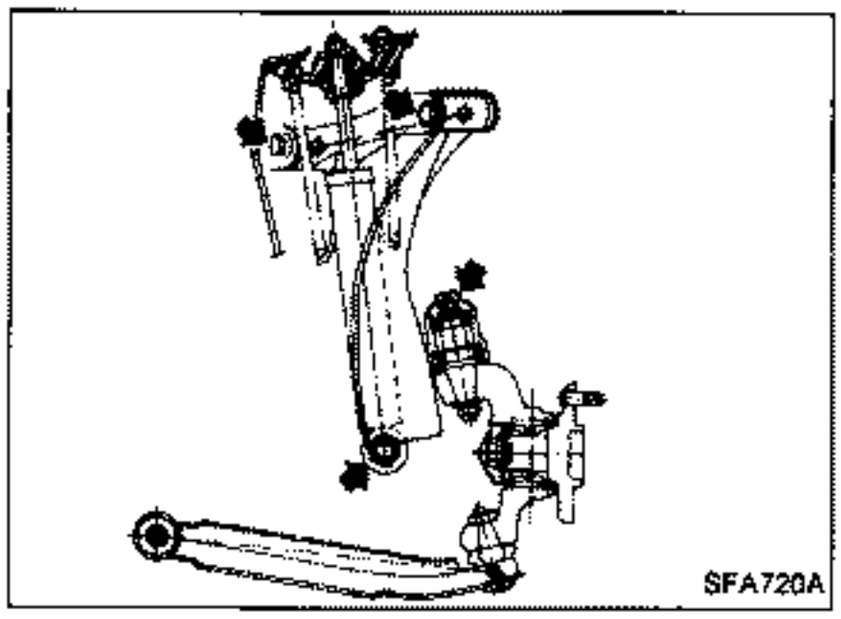

1. Remove cap and kingpin upper nut.

Do not remove kingpin lower nut.

2. Remove shock absorber fixing nut and upper link fixing bolts.
3. Remove third link and upper link.

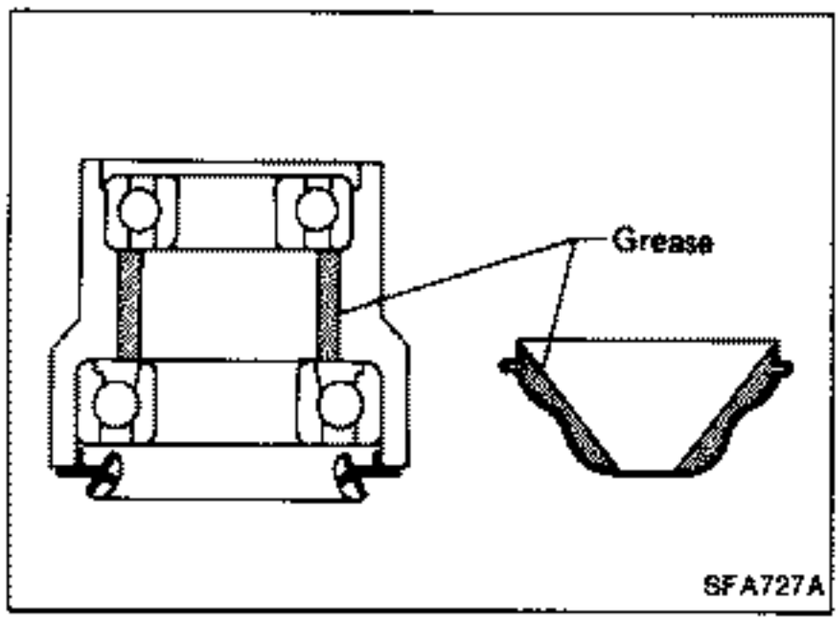

Installation

THIRD LINK

- Pack kingpin housing and cap with multi-purpose grease.
  Grease capacity:

Kingpin housing	**10 g (0.35 oz)**
Cap	**5 g (0.18 oz)**

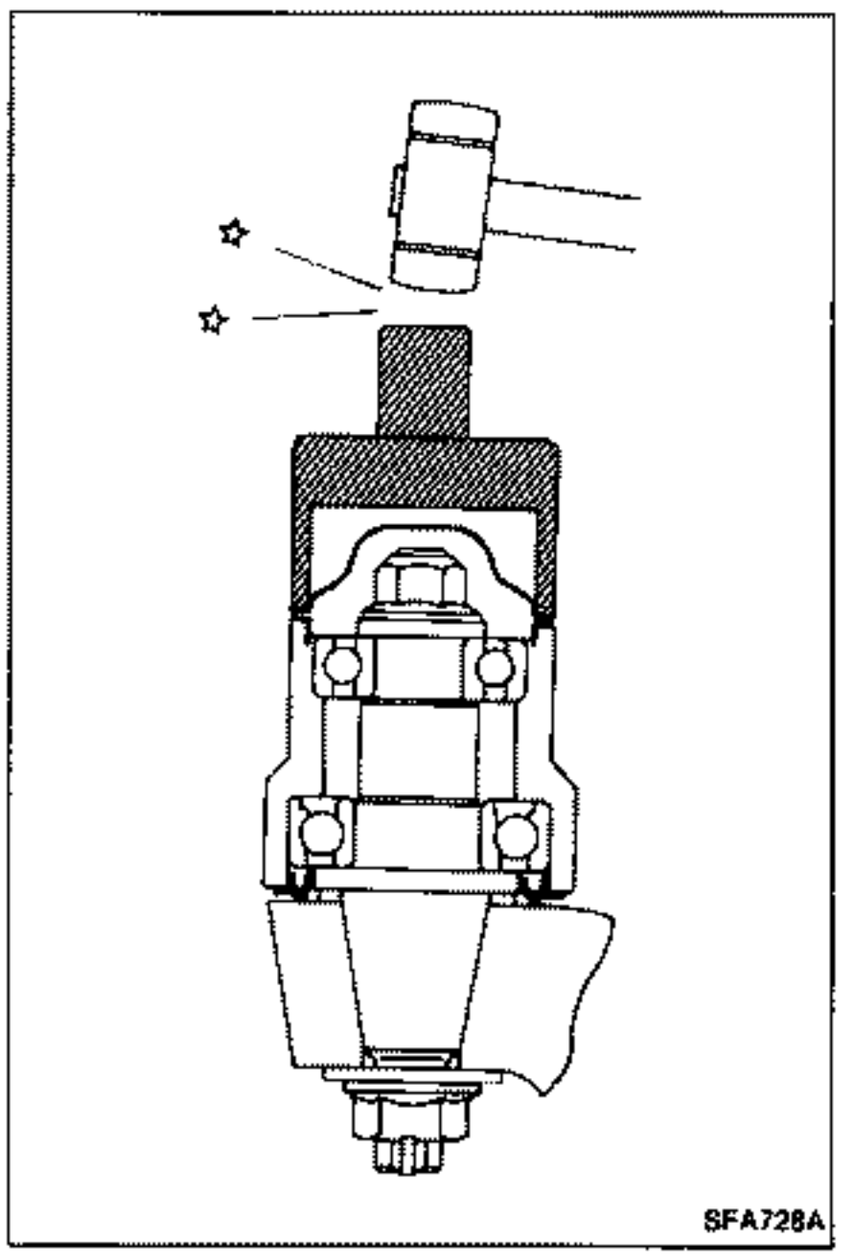

- Install third link and cap.

Installation (Cont'd)

UPPER LINK

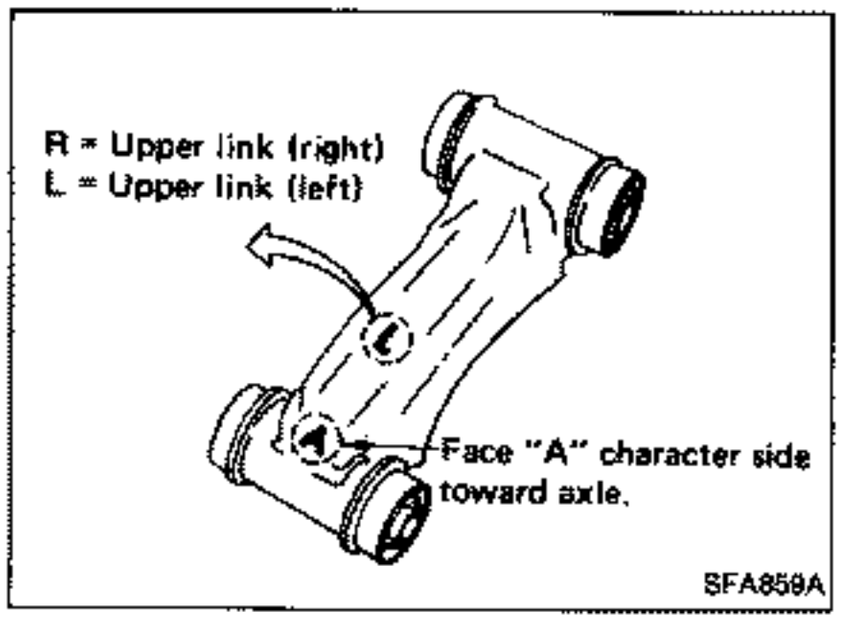

- Upper link has characters "A" and "L" (or "R") on it as shown. Always install upper link with "A" side facing axle and side without a character facing vehicle body.

Upper link bushings cannot be disassembled.

Disassembly

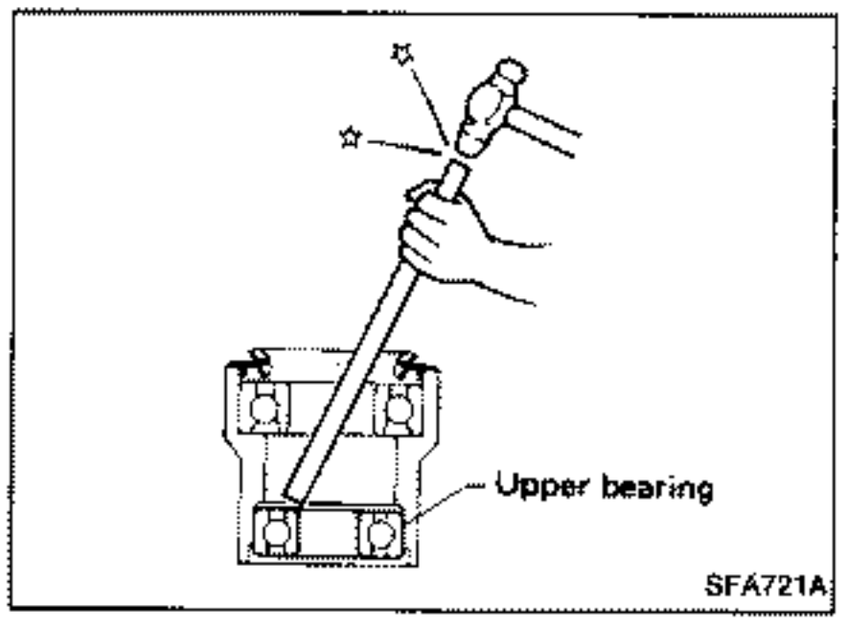

- Remove upper bearing (inner race and ball).

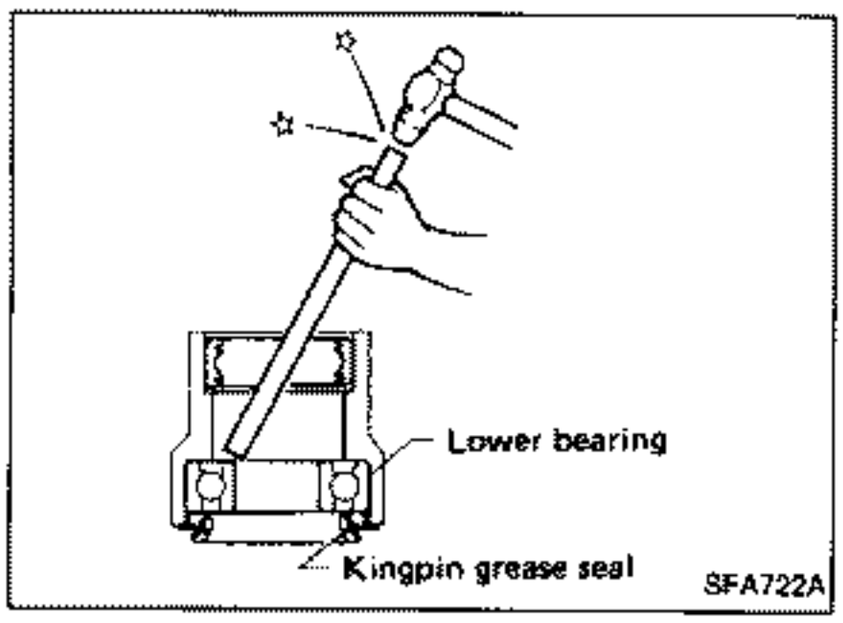

- Remove kingpin grease seal.
- Remove lower bearing (inner race and ball).

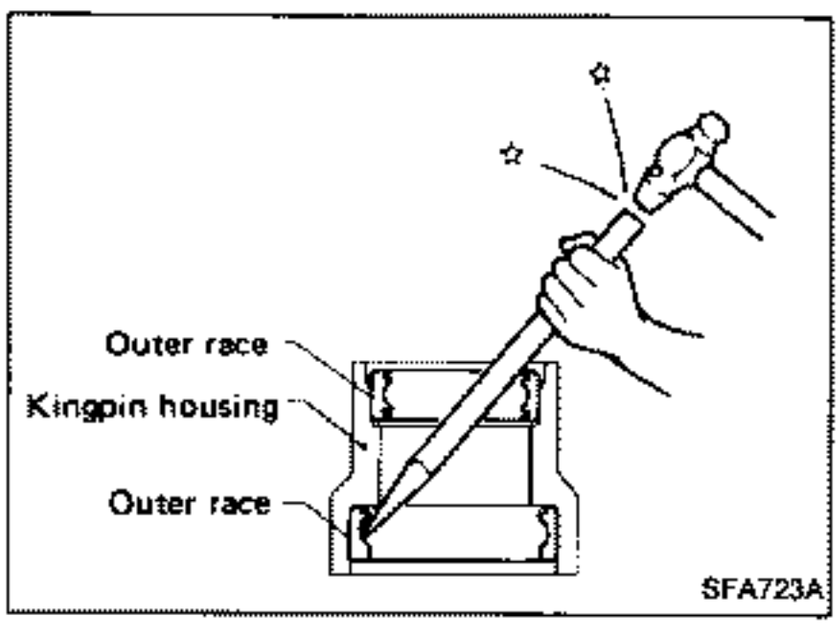

- Remove upper and lower outer race.

Be careful not to damage kingpin housing.

Assembly

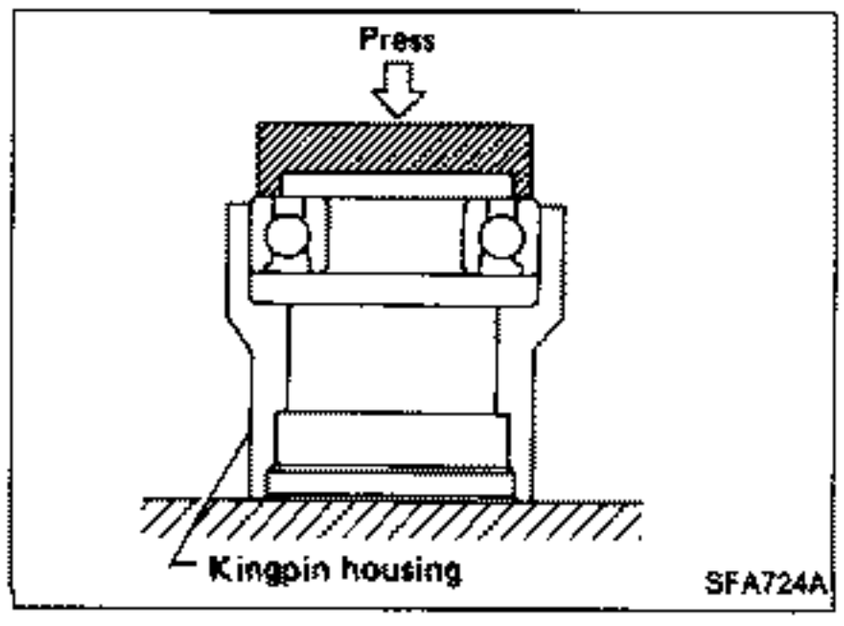

- Install lower bearing.

Assembly (Cont'd)

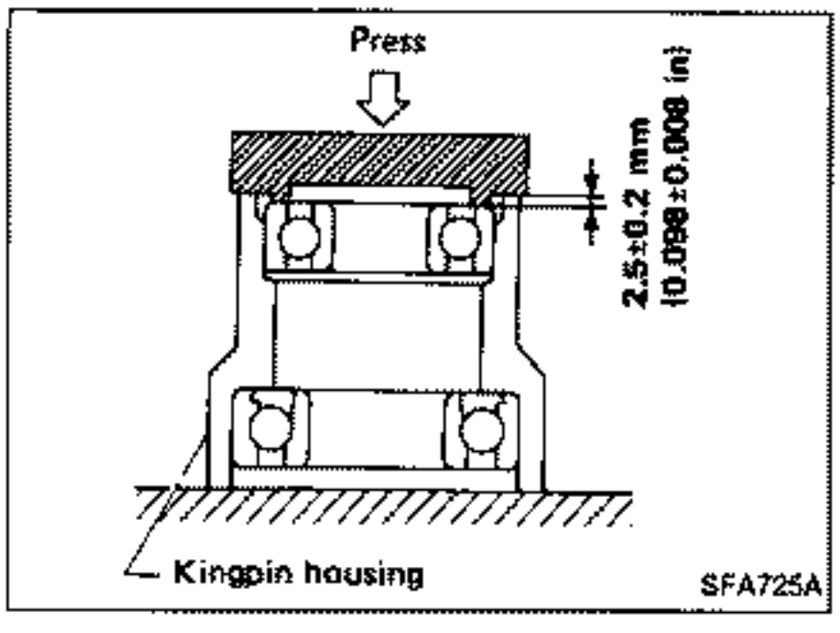

- Install upper bearing.

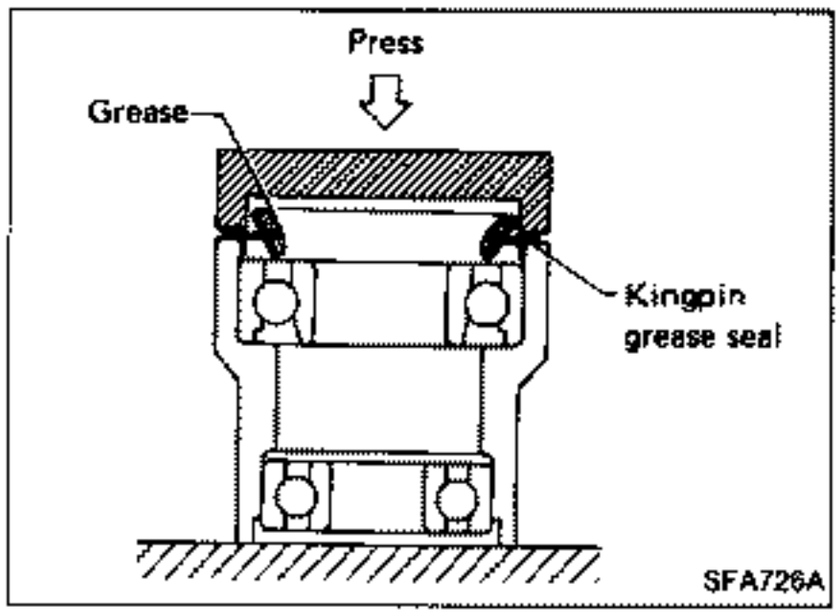

- Install lower oil seal.
- Apply multi-purpose grease to oil seal lip.

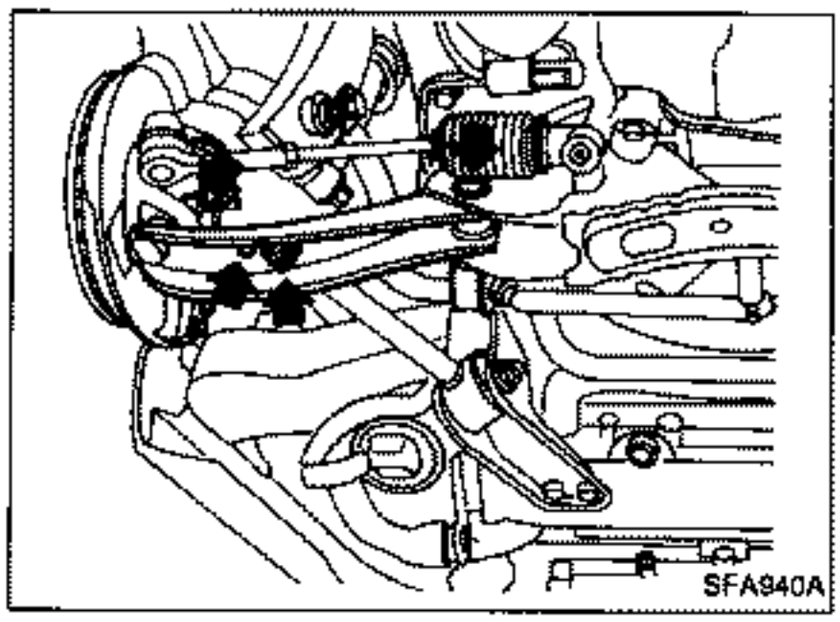

Removal and Installation

- Remove tension rod, ball joint and transverse link assembly.
- During installation, final tightening must be done at curb weight with tires on ground.
- After installation, check wheel alignment.
  Refer to "Front Wheel Alignment" in CHECK AND ADJUSTMENT — On-vehicle.

Inspection

TRANSVERSE LINK

- Check transverse link for damage, cracks or deformation. Replace it if necessary.
- Check rubber bushing for damage, cracks and deformation. Replace transverse link if necessary.

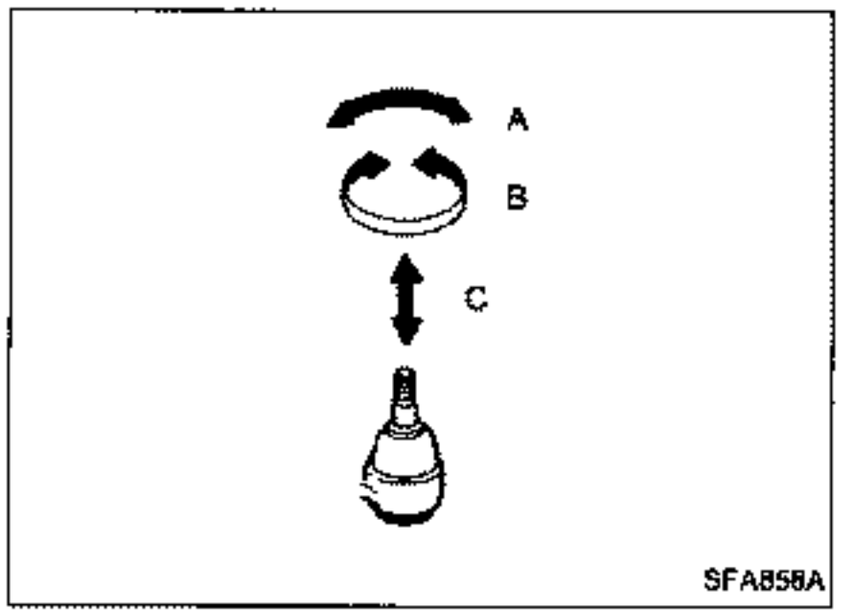

LOWER BALL JOINT

Check ball joint for play. If ball stud is worn, play in axial direction is excessive or joint is hard to swing, replace transverse link assembly.

Swing force and turning torque

Before checking, turn ball joint at least 10 revolutions so that ball joint is properly broken in.

Swing force "A":
(measuring point: cotter pin hole of ball stud)
7.8 - 53.0 N (0.8 - 5.4 kg, 1.8 - 11.9 lb)
Turning torque "B":
0.49 - 3.43 N·m (5.0 - 35 kg-cm, 4.3 - 30.4 in-lb)
Vertical end play "C":
0 mm (0 in)

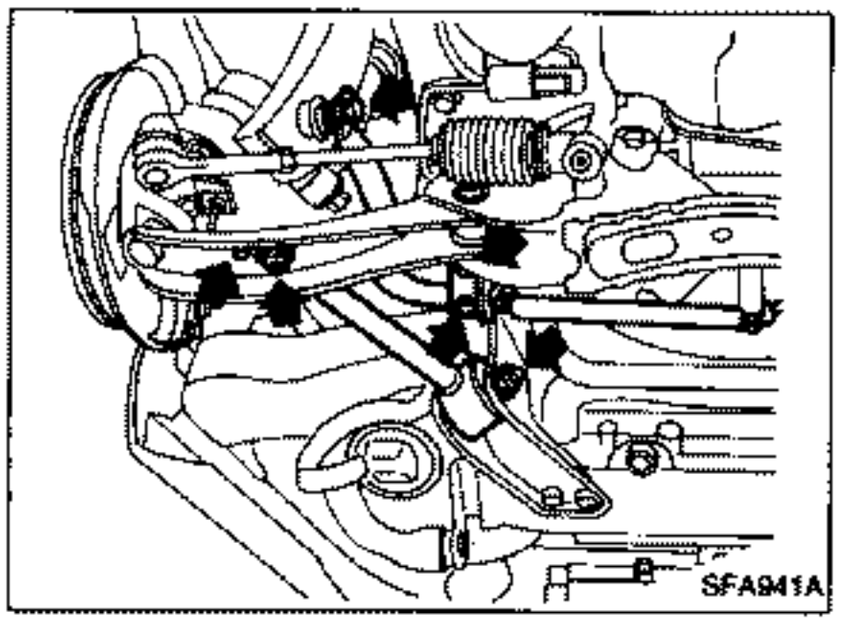

Removal and Installation

- Remove tension rod and stabilizer bar.

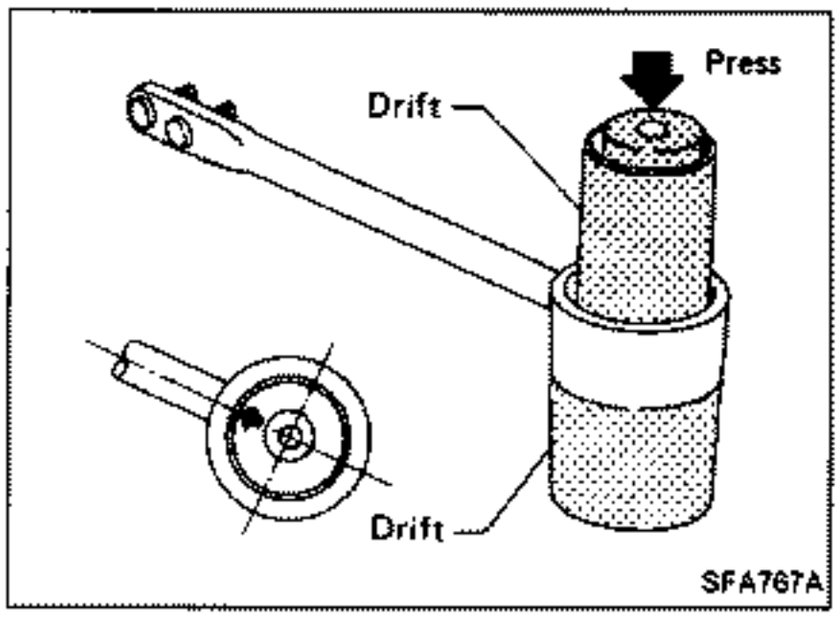

- When removing tension rod bushing, place one drift on lower side of bushing and the other on upper side, and press bushing out.
- Place arrow mark on bushing facing tension rod before installing bushing.

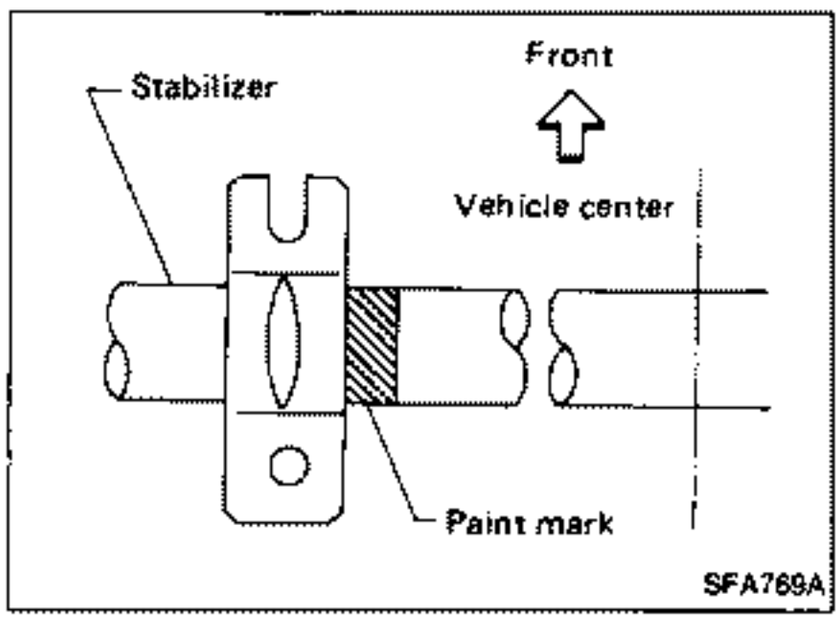

- When installing stabilizer, make sure that paint mark and clamp face in the correct direction.

General Specifications

COIL SPRING

Applied model	Australia	Europe
	VG30DE	VG30DETT
Wire diameter mm (in)	12.0 (0.472)	
Coil diameter mm (in)	100 (3.94)	
Free length mm (in)	370 (14.57)	390 (15.35)
Spring constant N/mm (kg/mm, lb/in)	27.5 (2.8, 157)	25.5 (2.6, 146)
Identification color	Blue x 2	L.H.: Orange x 1, Purple x 1 R.H.: White x 1, Purple x 1

SHOCK ABSORBER

Applied model	Australia	Europe
	VG30DE	VG30DETT
Damping force [at 0.3 m (1.0 ft)/sec.] N (kg, lb)		
Expansion	1,177 - 1,569 (120 - 160, 265 - 353)	1,177 - 1,530 (120 - 156, 265 - 344)
Compression	559 - 814 (57 - 83, 126 - 183)	539 - 755 (55 - 77, 121 - 170)
Piston rod diameter mm (in)	12.5 (0.492)	

FRONT STABILIZER BAR

Applied model	Australia	Europe
	VG30DE	VG30DETT
Stabilizer diameter mm (in)	28.6 (1.126)	27.2 (1.071)
Identification color	Purple	White

TENSION ROD

Applied model	All
Rod diameter mm (in)	20.0 (0.787)

Inspection and Adjustment

WHEEL ALIGNMENT (Unladen*1)

Camber	degree	-1°35′ to -0°05′
Caster	degree	9°00′ - 10°30′
Toe-in (Total)		
	mm (in)	0 - 2 (0 - 0.08)
	degree	0′ - 11′
Kingpin inclination	degree	12°10′ - 13°40′
Front wheel turning angle		
Full turn*2	degree	
Inside		32° - 36°
Outside		27° - 31°

*1: Fuel, radiator coolant and engine oil full. Spare tire, jack, hand tools and mats in designated positions.

*2: On power steering models, wheel turning force (at circumference of steering wheel) of 98 to 147 N (10 to 15 kg, 22 to 33 lb) with engine idle.

WHEEL BEARING

Wheel bearing axial end play mm (in)	0.05 (0.0020) or less
Wheel bearing lock nut	
Tightening torque N·m (kg-m, ft-lb)	206 - 284 (21 - 29, 152 - 210)
Wheel bearing turning resistance N·m (kg-cm, in-lb)	
NSK bearing	0.34 - 2.16 (3.5 - 22.0, 3.0 - 19.1)
NTN bearing	0.44 - 3.33 (4.5 - 34.0, 3.9 - 29.5)
At wheel hub bolt N (kg, lb)	
NSK bearing	5.9 - 37.3 (0.6 - 3.8, 1.3 - 8.4)
NTN bearing	7.8 - 57.9 (0.8 - 5.9, 1.8 - 13.0)

LOWER BALL JOINT

Swing force (Measuring point: cotter pin hole of ball stud) N (kg, lb)	7.8 - 53.0 (0.8 - 5.4, 1.8 - 11.9)
Turning torque N·m (kg-cm, in-lb)	0.49 - 3.43 (5.0 - 35, 4.3 - 30.4)
Vertical end play mm (in)	0 (0)

WHEEL RUNOUT (Radial and lateral)

Unit: mm (in)

Wheel type	Aluminum wheel
Radial runout limit	0.3 (0.012)
Lateral runout limit	