BRAKE SYSTEM

SECTION BR

CONTENTS

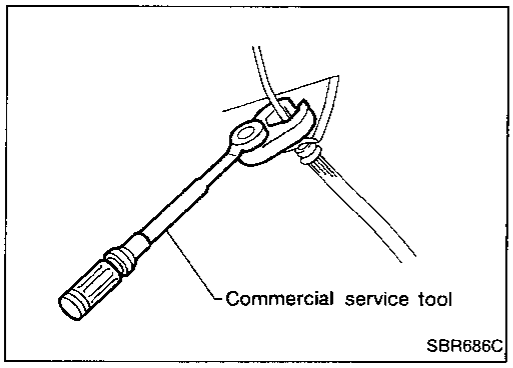

Precautions

- **Recommended fluid is brake fluid "DOT 3".**
- **Never reuse drained brake fluid.**
- **Be careful not to splash brake fluid on painted areas.**
- **To clean or wash all parts of master cylinder, disc brake caliper and wheel cylinder, use clean brake fluid.**
- **Never use mineral oils such as gasoline or kerosene. They will ruin rubber parts of the hydraulic system.**
- **Use flare nut wrench when removing and installing brake tube.**
- **Always torque brake lines when installing.**

WARNING:

- **Clean brake pads and shoes with a waste cloth, then wipe with a dust collector.**

Special Service Tools

Tool number (Kent-Moore No.) Tool name	Description
KV991V0010 (—) Brake fluid pressure gauge	Measuring brake fluid pressure 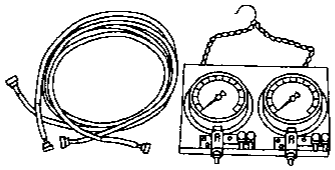 NT151

Commercial Service Tools

Tool name	Description
① Flare nut crows foot ② Torque wrench	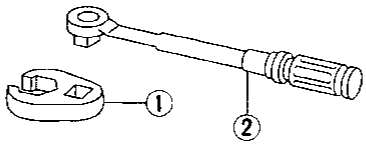 NT223

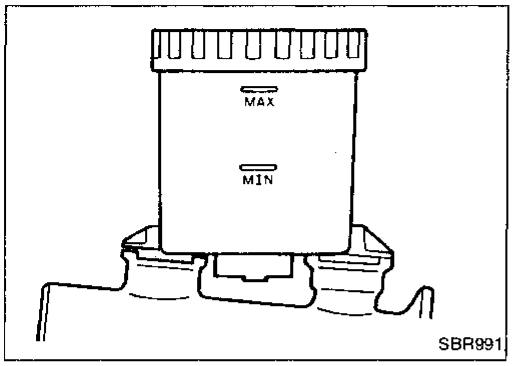

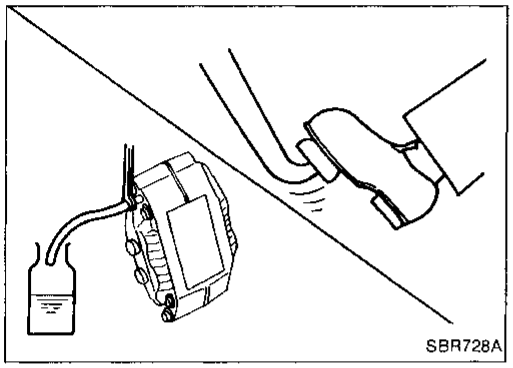

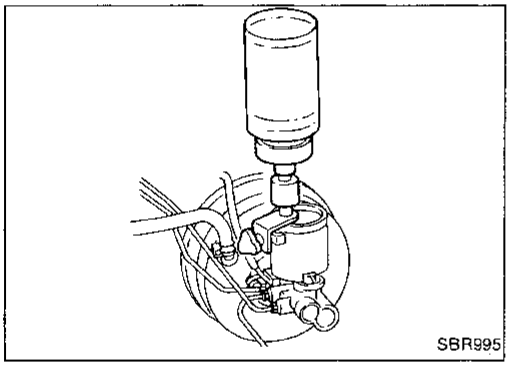

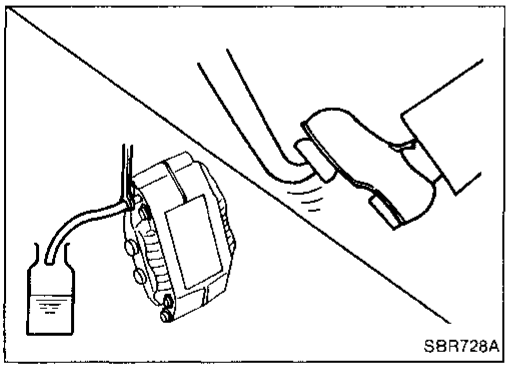

Checking Brake Fluid Level

- Check fluid level in reservoir tank. It should be between Max. and Min. lines on reservoir tank.
- If fluid level is extremely low, check brake system for leaks.

Checking Brake System

- Check brake lines (lines and flexible hoses) for cracks, deterioration or other damage. Replace any damaged parts.
  If leakage occurs around joints, retighten or, if necessary, replace damaged parts.
- Check for oil leakage by fully depressing brake pedal.

Changing Brake Fluid

1. Drain brake fluid in each air bleeder valve.
2. Refill until new brake fluid comes out of each air bleeder valve.
   Use same procedure as in bleeding hydraulic system to refill brake fluid.
   Refer to "Bleeding Brake System" (See below).

- **Refill with recommended brake fluid "DOT 3".**
- **Never reuse drained brake fluid.**
- **Be careful not to splash brake fluid on painted areas.**

Bleeding Brake System

CAUTION:

- **Carefully monitor brake fluid level at master cylinder during bleeding operation.**
- **Fill reservoir with recommended brake fluid. Make sure it is full at all times while bleeding air out of system.**
- **Place a container beneath master cylinder to avoid spillage of brake fluid.**
- **Before bleeding air, be sure to turn OFF ignition switch, and disconnect battery ground cable and actuator connector.**
- Bleed air according to the following procedure.

  Left rear caliper
  ↓
  Right rear caliper
  ↓
  Left front caliper
  ↓
  Right front caliper
  ↓
  Front side air bleeder on ABS actuator
  ↓
  Rear side air bleeder on ABS actuator

- **To bleed air out of lines, wheel cylinders and calipers, use the following procedure.**

1) Connect a transparent vinyl tube to air bleeder valve.
2) Fully depress brake pedal several times.
3) With brake pedal depressed, open air bleeder valve to release air.
4) Close air bleeder valve.
5) Release brake pedal slowly.
6) Repeat steps 2) through 5) until clear brake fluid comes out of air bleeder valve.

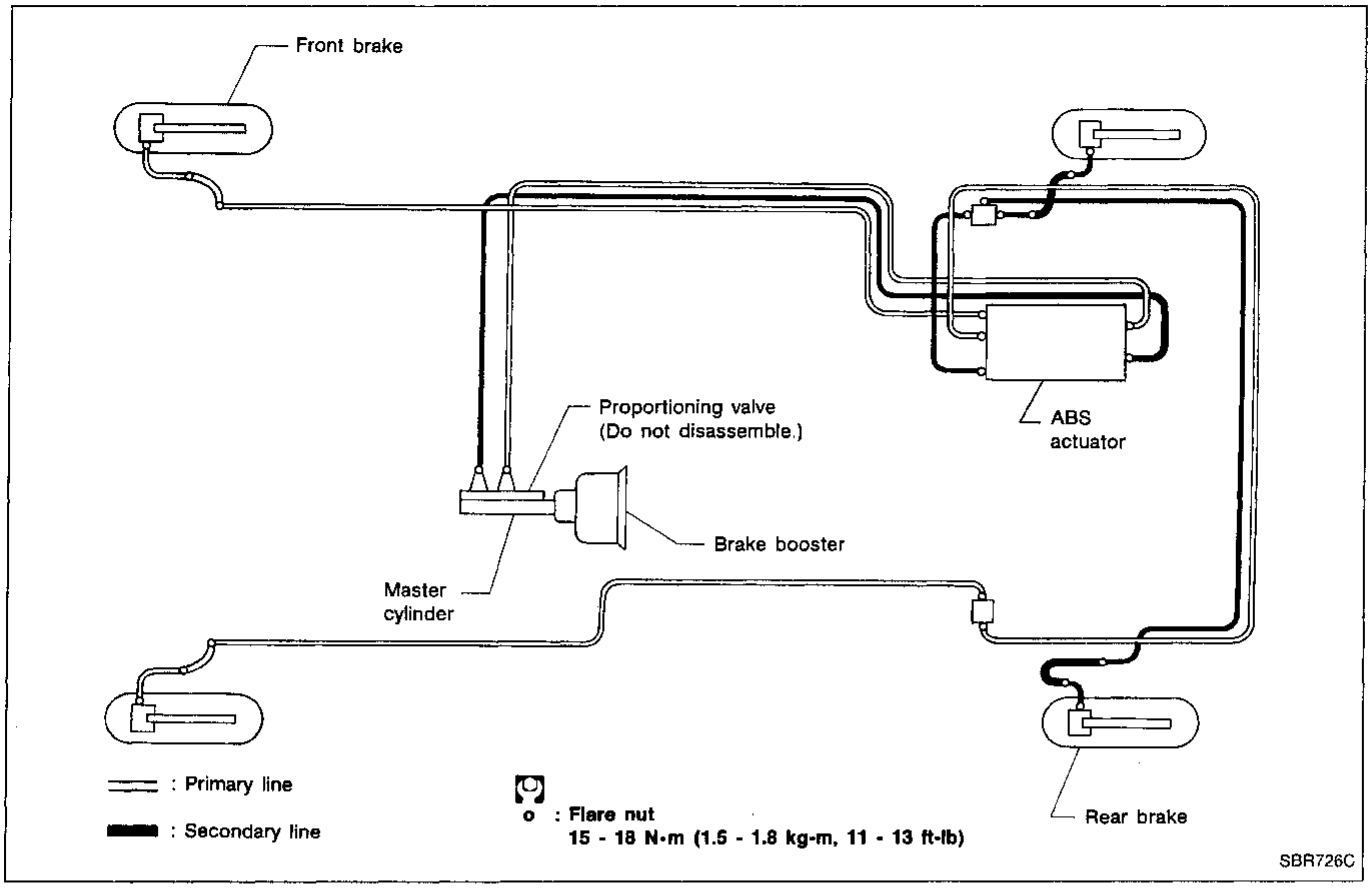

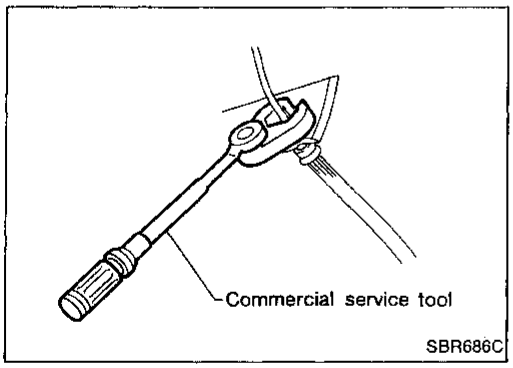

Removal and Installation

1. To remove brake flexible hose, first remove flare nut securing brake line to hose, then withdraw lock spring.
2. Cover openings to prevent entrance of dirt whenever disconnecting hydraulic line.
3. All hoses must be free from excessive bending, twisting and pulling.
4. After installing brake lines, check for oil leakage by fully depressing brake pedal.

Inspection

Check brake lines (lines and flexible hoses) for cracks, deterioration or other damage. Replace any damaged parts.
If leakage occurs around joints, retighten or, if necessary, replace damaged parts.

Removal and Installation

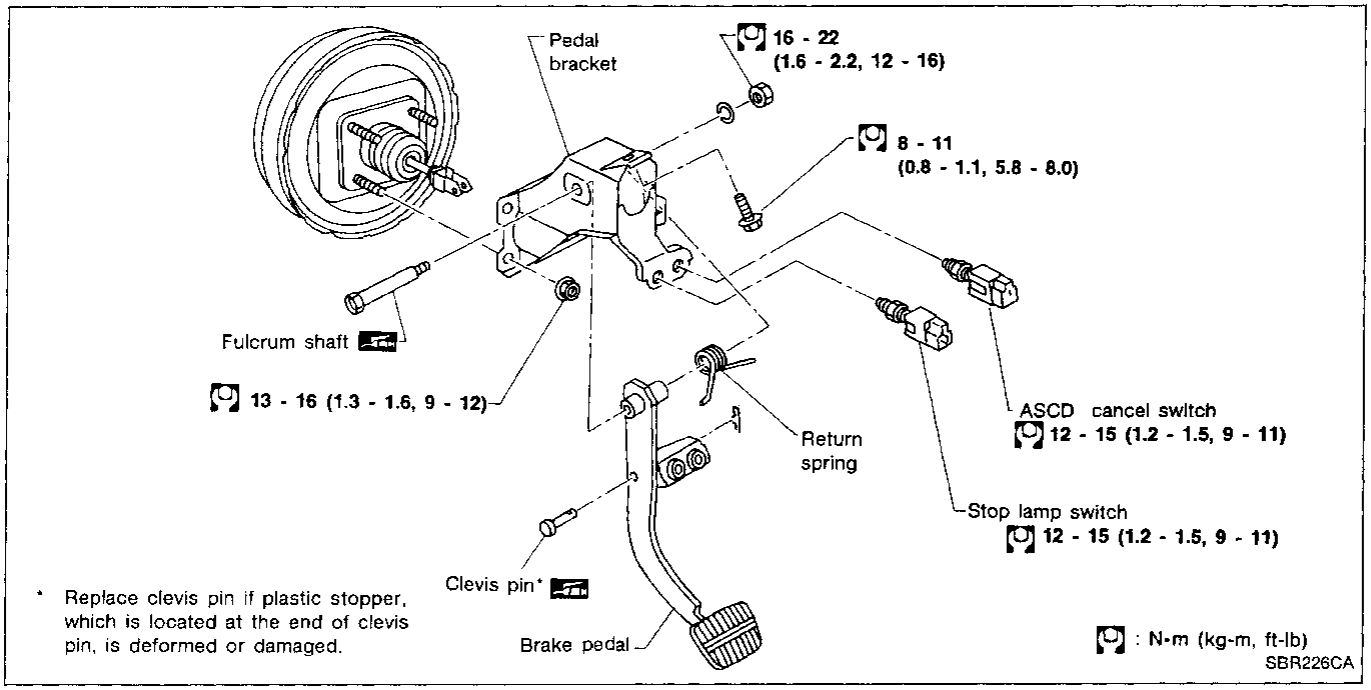

Inspection

Check brake pedal for following items.

- Brake pedal bend
- Clevis pin deformation
- Crack of any welded portion

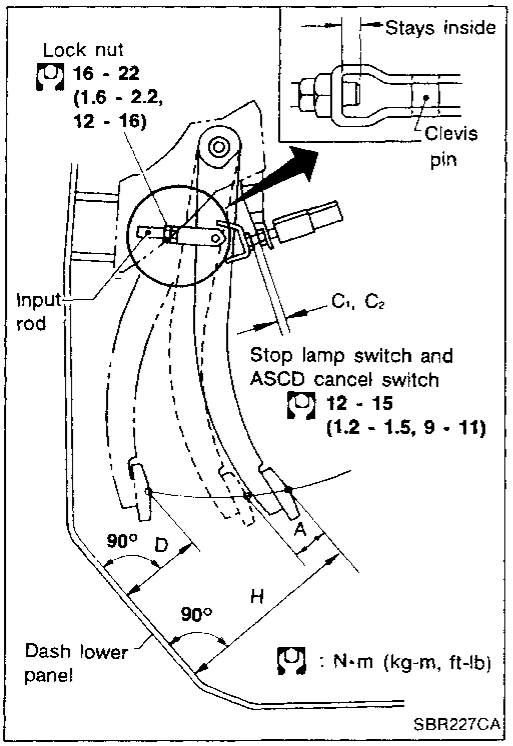

Adjustment

Check brake pedal free height from dash reinforcement panel. Adjust if necessary.

H: Free height
Refer to SDS.

D: Depressed height
Refer to SDS.
Under force of 490 N (50 kg, 110 lb) with engine running

C_1: Clearance between pedal stopper and threaded end of stop lamp switch
0.3 - 1.0 mm (0.012 - 0.039 in)

C_2: Clearance between pedal stopper and threaded end of ASCD switch
0.3 - 1.0 mm (0.012 - 0.039 in)

A: Pedal free play
1 - 3 mm (0.04 - 0.12 in)

Adjustment (Cont'd)

1. Adjust pedal free height with brake booster input rod. Then tighten lock nut.

Make sure that tip of input rod stays inside.

2. Adjust clearance "C_1" and "C_2" with stop lamp switch and ASCD switch respectively. Then tighten lock nuts.
3. Check pedal free play.

Make sure that stop lamp is off when pedal is released.

4. Check brake pedal's depressed height while engine is running.
   If depressed height is below specified value, check brake system for leaks, accumulation of air or any damage to components (master cylinder, wheel cylinder, etc.); then make necessary repairs.

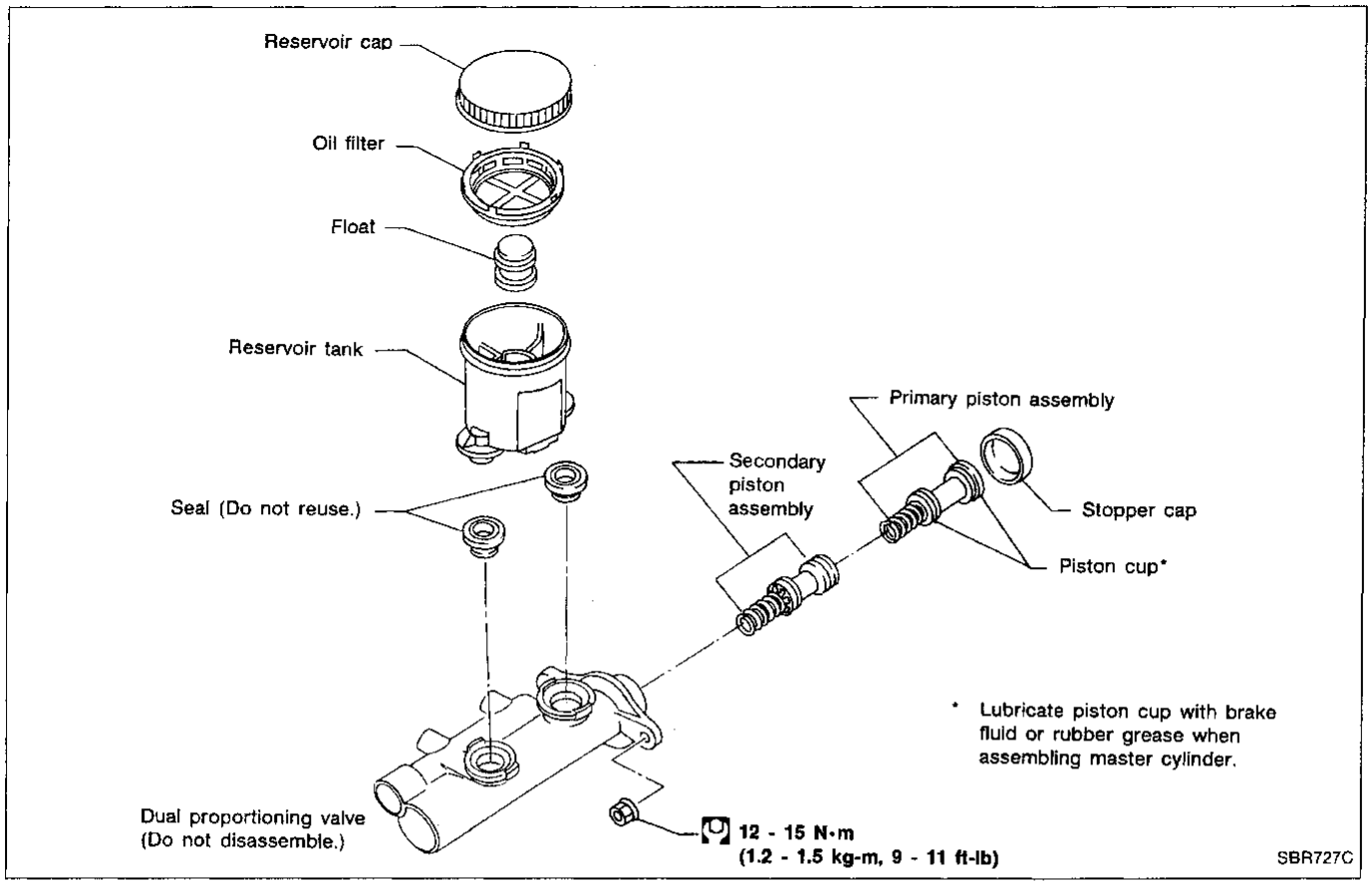

Removal

CAUTION:

- **Be careful not to splash brake fluid on painted areas; it may cause of paint damage. If brake fluid is splashed on painted areas, wash it away with water immediately.**

1. Connect a vinyl tube to air bleeder valve.
2. Drain brake fluid from each air bleeder valve, depressing brake pedal to empty fluid from master cylinder.
3. Remove brake pipe flare nuts.
4. Remove master cylinder mounting nuts.

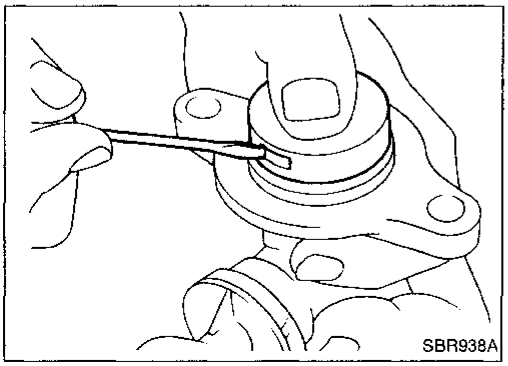

Disassembly

1. Remove valve stopper while pushing valve into cylinder lightly.
2. Bend claws of stopper cap outward.

Disassembly (Cont'd)

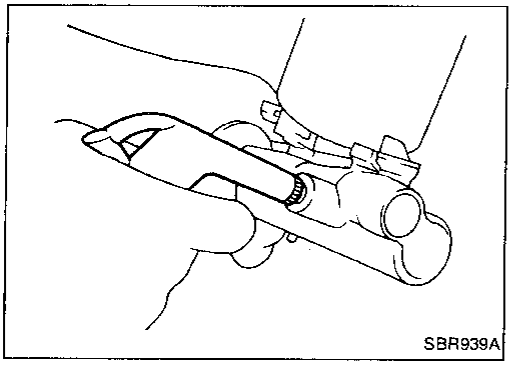

3. Remove piston assemblies.

If it is difficult to remove secondary piston assembly, gradually apply compressed air through fluid outlet.

4. Draw out reservoir tank.

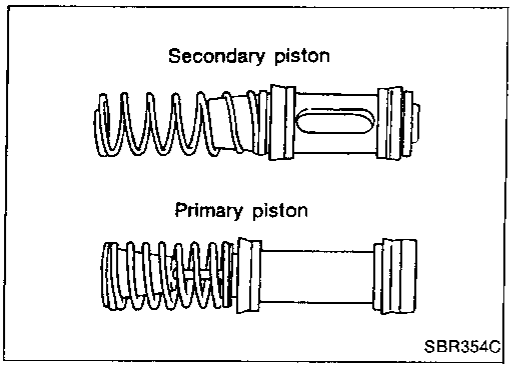

Inspection

Check for the following items.

Replace any part if damaged.

Master cylinder:

- Pin holes or scratches on inner wall.

Piston:

- Deformation of or scratches on piston cups.

Assembly

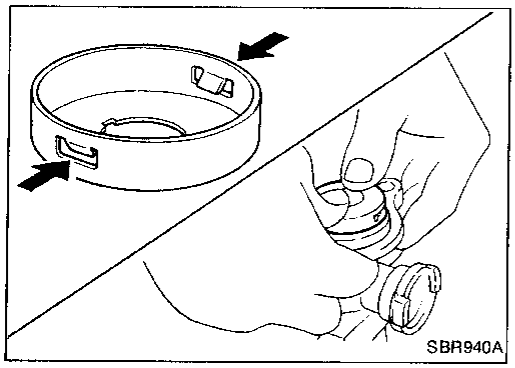

Pay attention to direction of piston cups in figure at left. Also, insert pistons squarely to avoid scratches on cylinder bore.

1. Bend claws inward.
2. Install stopper cap.
3. Install reservoir tank oil seals.
4. Push reservoir tank into master cylinder.

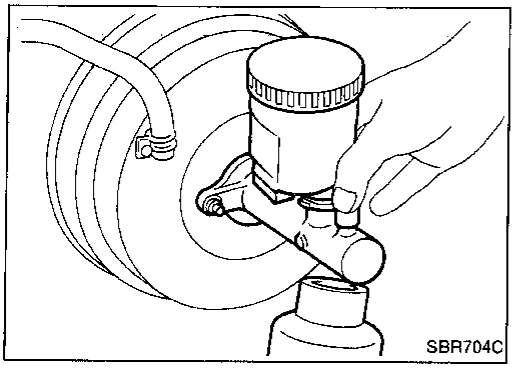

Installation

CAUTION:

- **Refill with new brake fluid "DOT 3".**
- **Never reuse drained brake fluid.**

1. Place master cylinder onto brake booster and secure mounting nuts lightly.
2. Torque mounting nuts.
   12 - 15 N·m (1.2 - 1.5 kg-m, 9 - 11 ft-lb)
3. Fill up reservoir tank with new brake fluid.
4. Plug all ports on master cylinder with fingers in order not to have air sucked while releasing brake pedal.
5. Have driver depress brake pedal slowly several times until no air comes out of master cylinder.
6. Fit brake lines to master cylinder.
7. Tighten flare nuts.
   : 15 - 18 N·m (1.5 - 1.8 kg-m, 11 - 13 ft-lb)
8. Bleed air from brake system. Refer to "Bleeding Brake System" (BR-3).

Removal and Installation

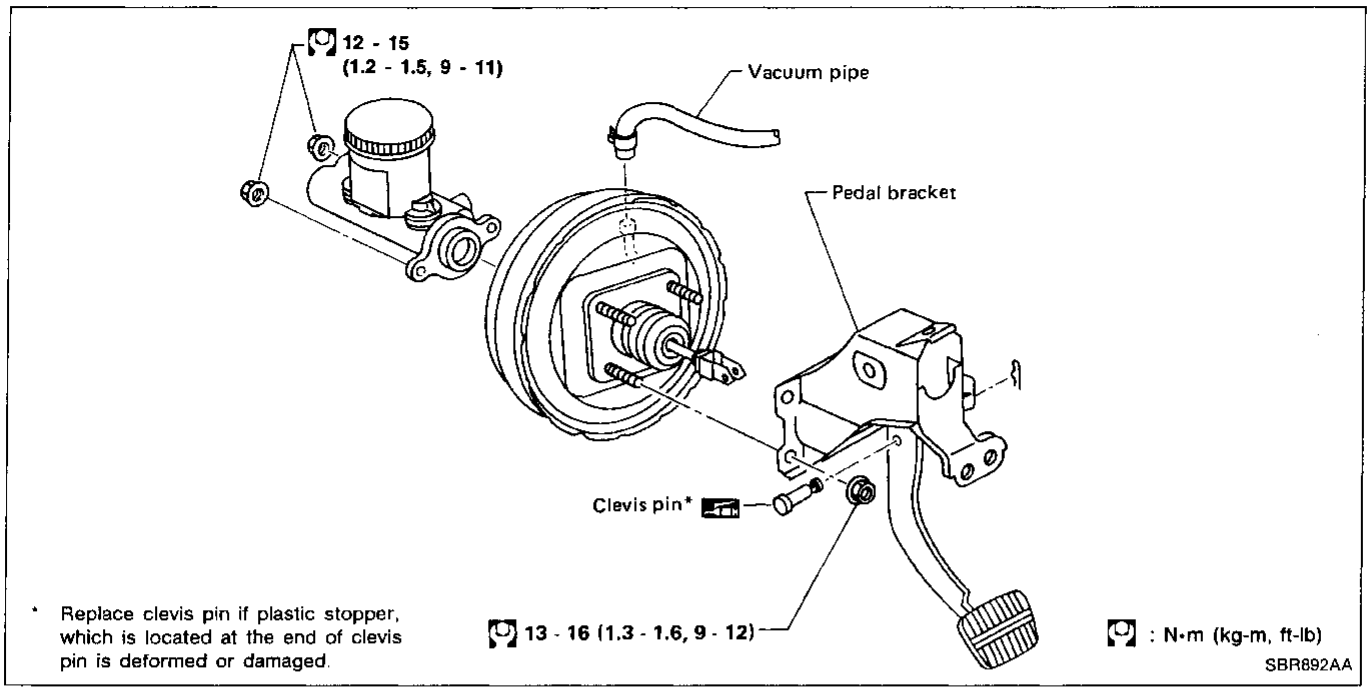

* Replace clevis pin if plastic stopper, which is located at the end of clevis pin is deformed or damaged.

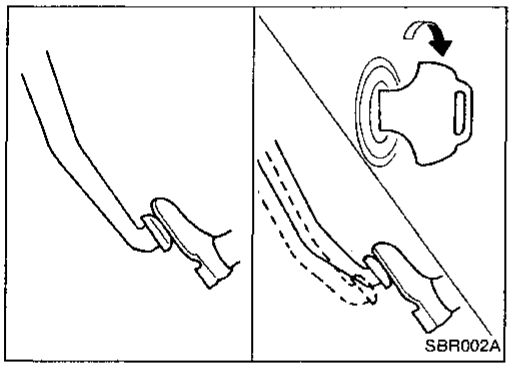

Inspection

OPERATING CHECK

- Depress brake pedal several times with engine off, and check that there is no change in pedal stroke.
- Depress brake pedal, then start engine. If pedal goes down slightly, operation is normal.

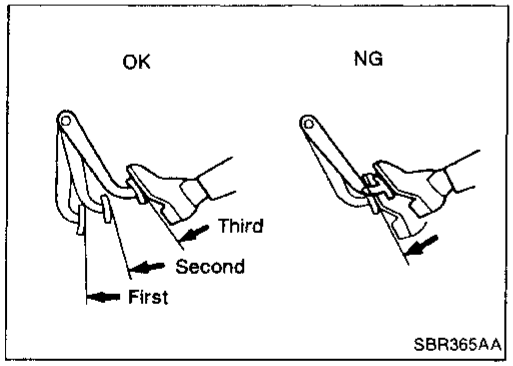

AIRTIGHT CHECK

- Start engine, and stop it after one or two minutes. Depress brake pedal several times slowly. If pedal goes further down the first time and gradually rises after second or third time, booster is airtight.
- Depress brake pedal while engine is running, and stop engine with pedal depressed. If there is no change in pedal stroke after holding pedal down **30 seconds**, brake booster is airtight.

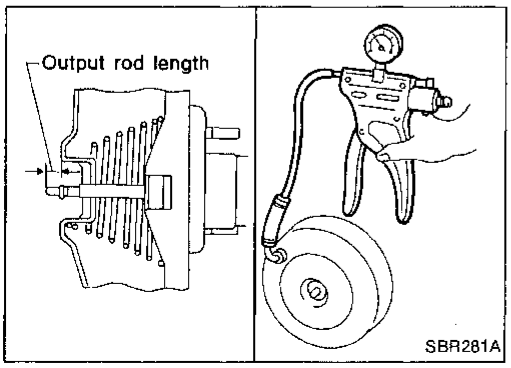

OUTPUT ROD LENGTH CHECK

1. Apply vacuum of –66.7 kPa (–500 mmHg, –19.69 inHg) to brake booster with a handy vacuum pump.
2. Check output rod length.
   Specified length:
   10.275 - 10.525 mm (0.4045 - 0.4144 in)
3. Adjust rod length if necessary.
4. If rod length is without specification, replace brake booster.

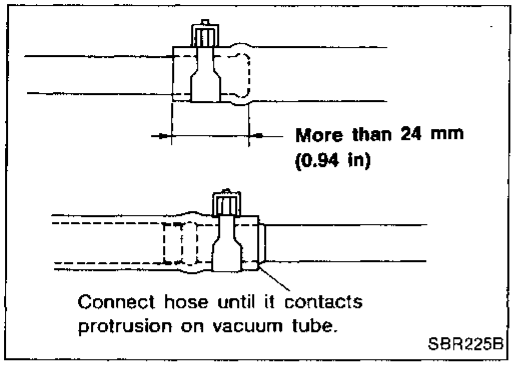

Removal and Installation

CAUTION:

When installing vacuum hoses, pay attention to the following points.

- **Do not apply any oil or lubricants to vacuum hose and check valve.**
- **Insert vacuum tube into vacuum hoses as shown.**

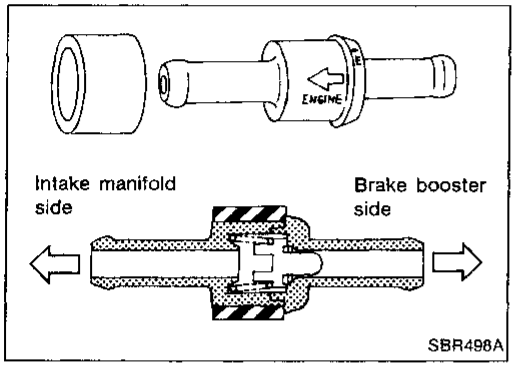

- Install check valve, paying attention to its direction.

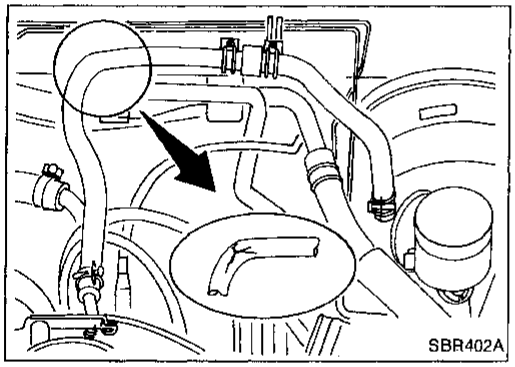

Inspection

HOSES AND CONNECTORS

- Check vacuum lines, connections and check valve for airtightness, improper attachment chafing and deterioration.

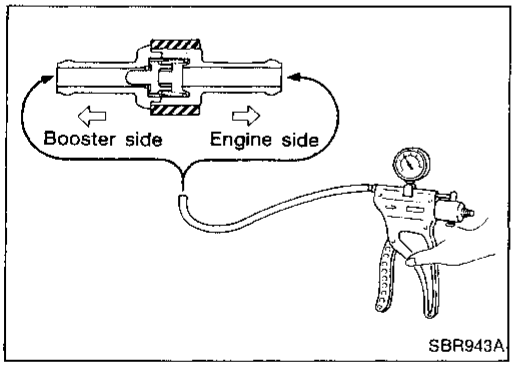

CHECK VALVE

Check vacuum with a vacuum pump.

Connect to booster side	Vacuum should exist.
Connect to engine side	Vacuum should not exist.

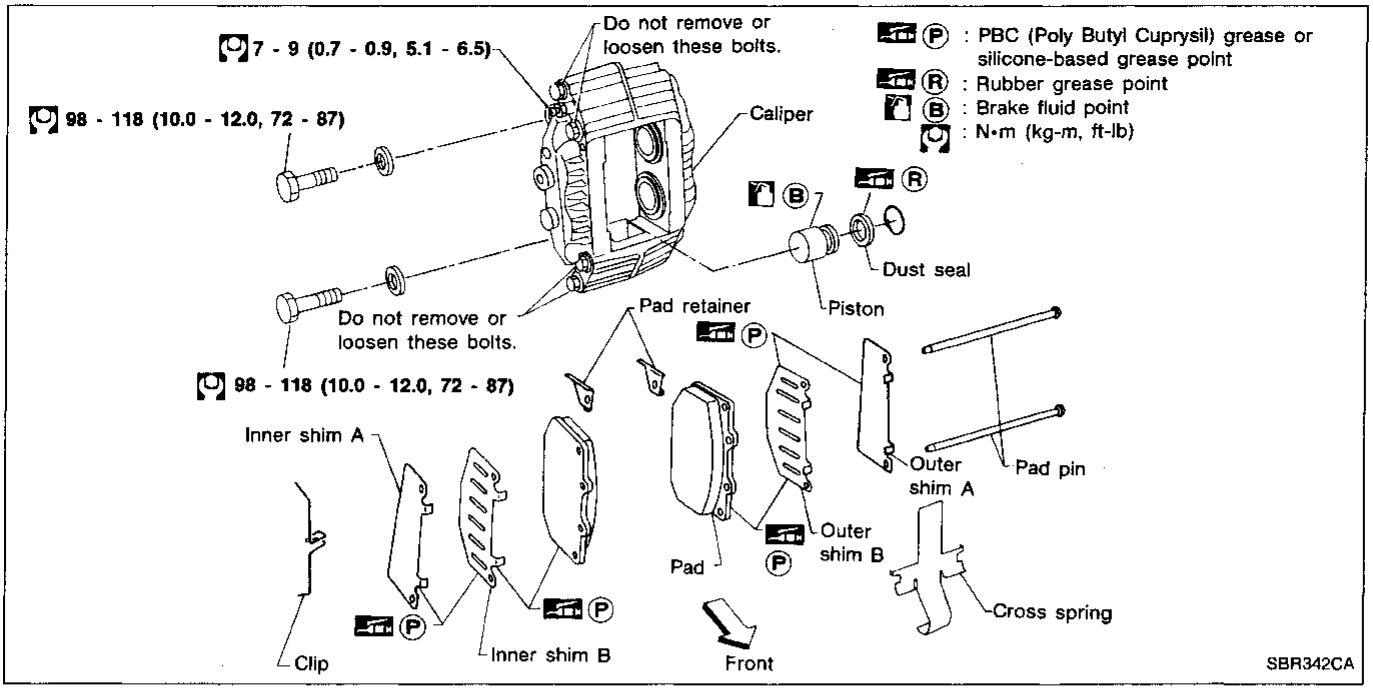

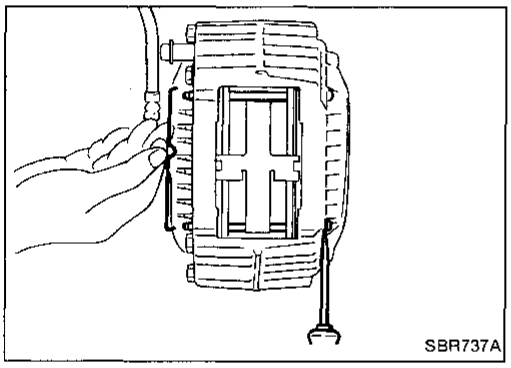

Pad Replacement

CAUTION:

- **When pads are removed, do not depress brake pedal because piston will pop out.**
- **Be careful not to damage dust seal or get oil on rotor. Always replace shims when replacing pads.**

1. Remove clip from pad pin and then remove pad pin.
2. Remove cross spring.

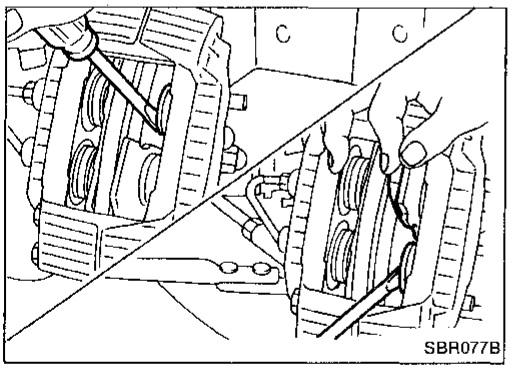

3. Pull out outer pad and insert it temporarily between lower piston and rotor as shown.
4. Push back upper piston with a suitable tool and insert new pad so it contacts upper piston as shown.
5. Pull out old pad.
6. Push back lower piston with a suitable tool.
7. Pull out new pad and reinstall it in the proper position.
8. Repeat step 3 to 7 for inner pad.
9. Install cross spring, pad pin and clip.

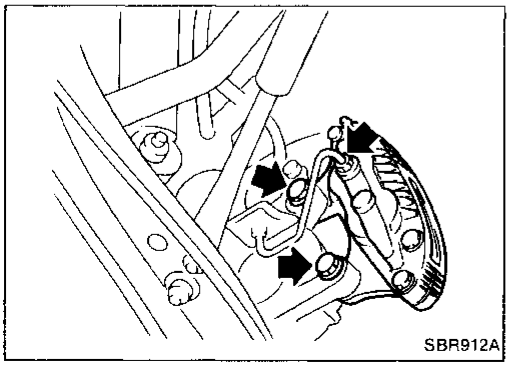

Removal and Installation

1. Disconnect brake tube.
2. Remove brake pad.
3. Remove brake caliper mounting bolts.

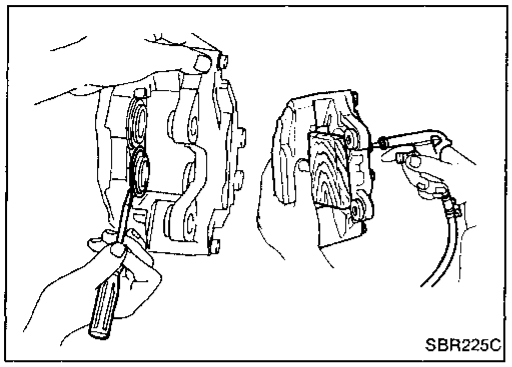

Disassembly

1. Remove retaining ring.
2. Push out piston with dust seal using compressed air.

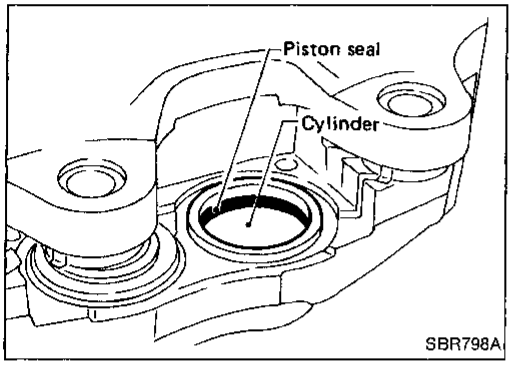

3. Remove piston seal.

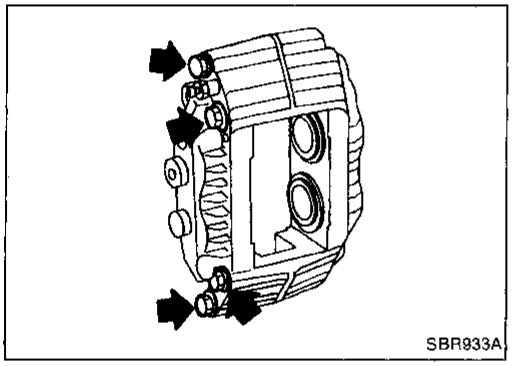

CAUTION:
Be careful not to loosen or remove bolts joining both sides of caliper.
If there is any fluid leakage, replace caliper assembly.

Inspection

CALIPER

- Check dust seals for damage.
- Check calipers for damage, rust or foreign materials.
- Check inside surface of cylinder for scoring, rust, wear, damage or foreign materials. Replace if any such condition exists.
- Eliminate minor damage from rust or foreign materials by polishing surface with fine emery paper.

CAUTION:
Use brake fluid to clean.

PISTON

Check piston for scoring, rust, wear, damage or foreign materials. Replace if any condition exists.

CAUTION:
Piston sliding surface is plated. Do not polish with emery paper even if rust or foreign materials are stuck to sliding surface.

PAD PIN AND CLIPS

Check for wear, cracks deformation, deterioration, rust or other damage. Replace if any such condition exists.

Inspection (Cont'd)

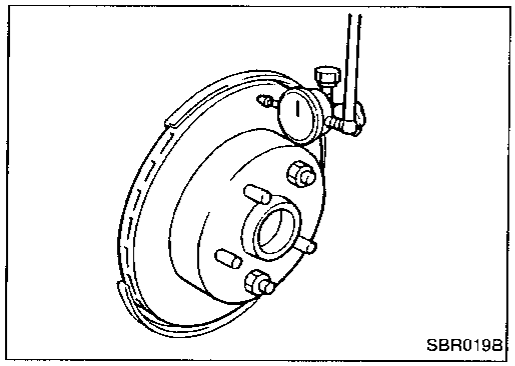
SBR019B

RUNOUT

1. Secure rotor to wheel hub with at least two nuts (M12 x 1.25).
2. Check runout using a dial indicator.

Make sure that wheel bearing axial end play is within the specifications before measuring. Refer to "Front Wheel Bearing" in FA section.

Maximum runout:
0.05 mm (0.0020 in)

3. If the runout is out of specification, find minimum runout position as follows:
   a. Remove nuts and rotor from wheel hub.
   b. Shift the rotor one hole and secure rotor to wheel hub with nuts.
   c. Measure runout.
   d. Repeat steps a. to c. so that minimum runout position can be found.
4. If the runout is still out of specification, turn rotor with on-car brake lathe ("MAD, DL-8700", "AMMCO 700 and 705" or equivalent).

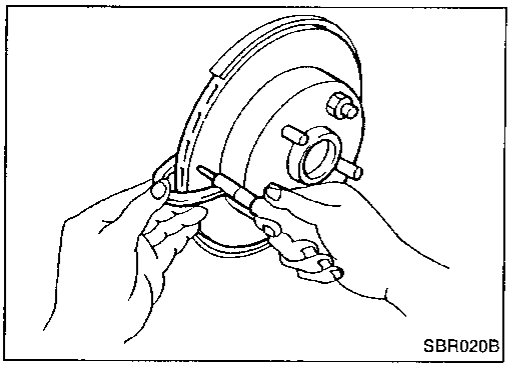
SBR020B

THICKNESS

Thickness variation (At least 8 positions):
Maximum 0.01 mm (0.0004 in)

If thickness variation exceeds the specification, turn rotor with on-car brake lathe.

Rotor repair limit:
28.0 mm (1.102 in)

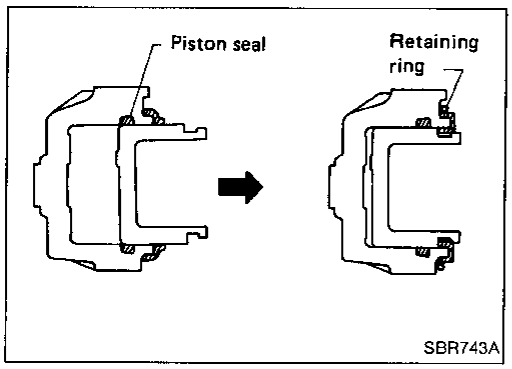

SBR743A

Assembly

1. Insert piston seal into groove on cylinder body.
2. With dust seal fitted to piston, install piston into cylinder body.
3. Secure dust seal properly.
4. Install retaining ring.

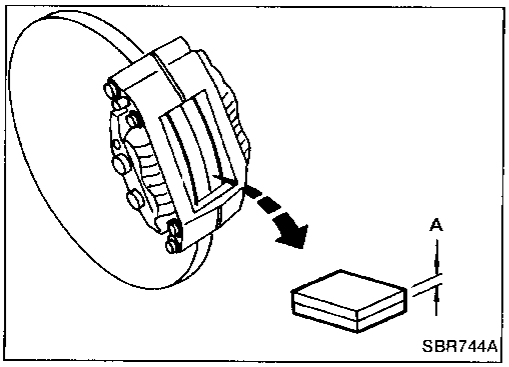

SBR744A

Inspection (On-vehicle)

DISC PAD

- Check pad shims for deformation or damage.
- Check disc pad for wear or damage.

Pad standard thickness (A):
10.0 mm (0.394 in)
Pad wear limit (A):
2.0 mm (0.079 in)

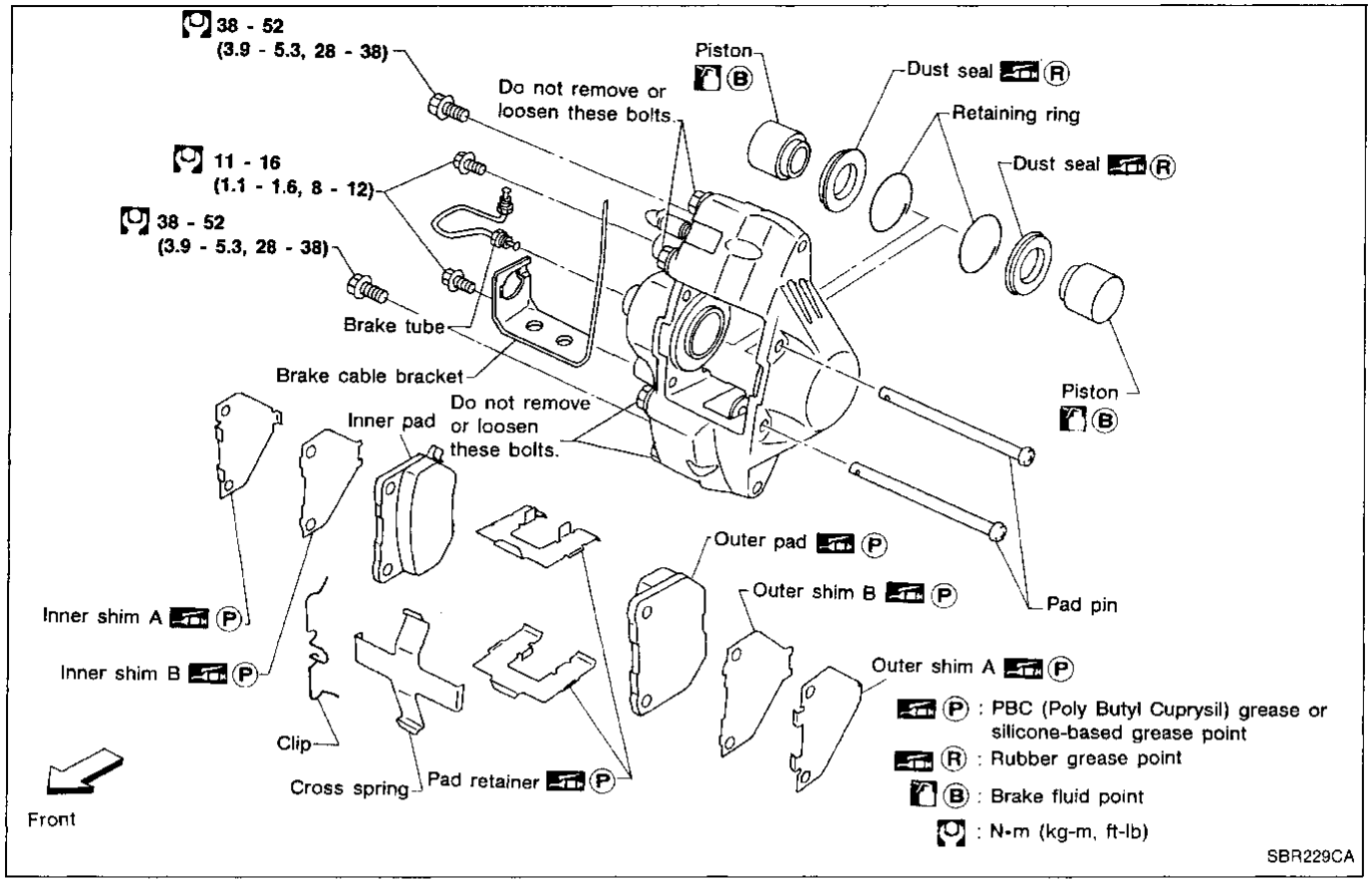

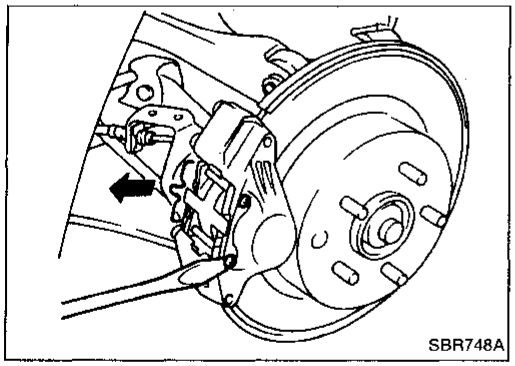

Pad Replacement

1. Remove clip from pad pin and then remove pad pin.
2. Remove cross spring.
   Standard pad thickness:
   11.5 mm (0.453 in)
   Pad wear limit:
   2.0 mm (0.079 in)

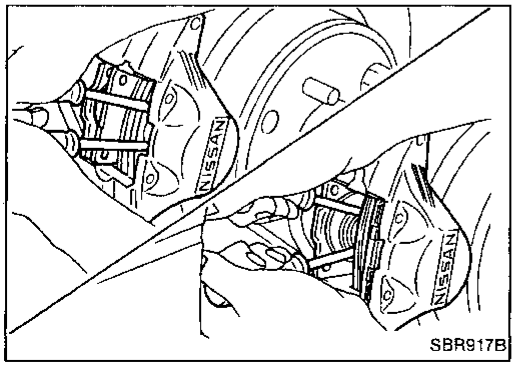

3. Pull out outer pad.
4. Push back outer piston with a suitable tool and install new pad.
5. Pull out inner pad.
6. Push back inner piston with a suitable tool and install new pad.
7. Install cross spring, pad pin and clip.

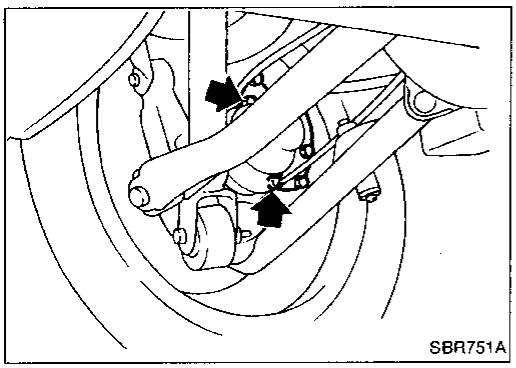

Removal and Installation

1. Disconnect brake tube.
2. Remove brake pad.
3. Remove brake cable and bracket.
4. Remove axle housing fixing bolts.

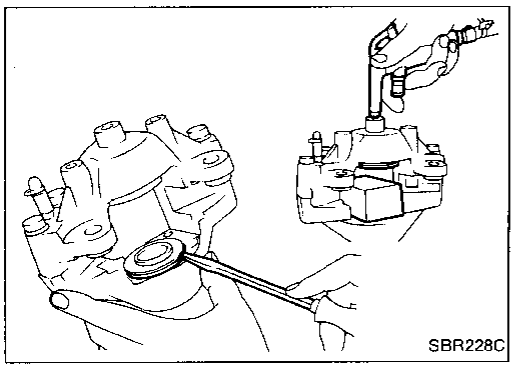

Disassembly

1. Remove retaining ring.
2. Push out piston with dust seal using compressed air.

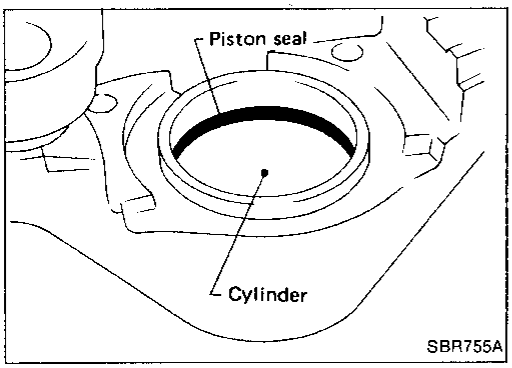

3. Remove piston seal.

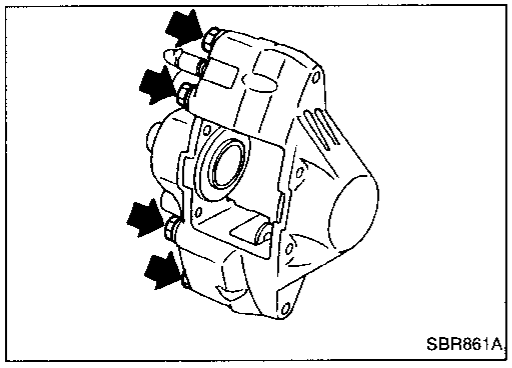

CAUTION:
Be careful not to loosen or remove bolts joining both sides of caliper.
If there is any fluid leakage, replace caliper assembly.

Inspection

CALIPER

- Check dust seals for damage.
- Check calipers for damage, rust or foreign materials.
- Check inside surface of cylinder for score, rust, wear or other damage.
- Minor damage from rust of foreign materials may be eliminated by polishing surface with a fine emery paper. Replace if necessary.

CAUTION:
Use brake fluid to clean.

Inspection (Cont'd)

PISTON

Check piston for score, rust, wear or other damage. Replace if necessary.

CAUTION:

Piston sliding surface is plated. Do not polish with emery paper even if rust or foreign matter is stuck to sliding surface.

PAD PIN AND CLIP

Check for wear, cracks deformation, deterioration, rust or other damage. Replace if necessary.

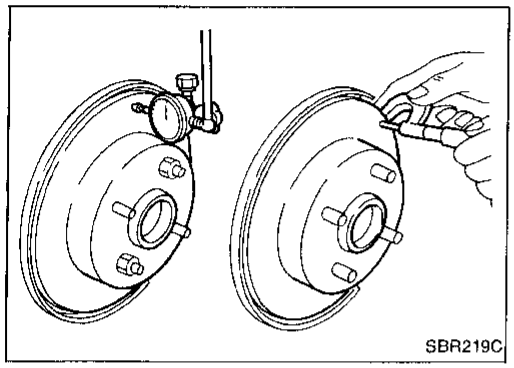

RUNOUT

- Secure rotor to wheel hub with at least two nuts (M12 x 1.25).

Make sure that axial end play is within the specifications before measuring. Refer to "Rear Wheel Bearing" in RA section.

Maximum runout: 0.07 mm (0.0028 in)
(Total indicator reading at center of rotor pad contact surface)

THICKNESS

Rotor repair limit: 16.0 mm (0.630 in)

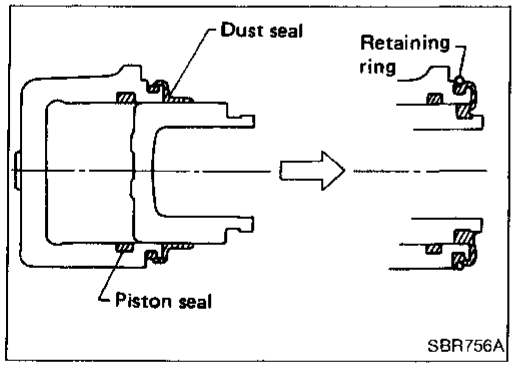

Assembly

1. Insert piston seal into groove on cylinder body.
2. With dust seal fitted to piston, install piston into cylinder body.
3. Secure dust seal properly.
4. Install retaining ring.

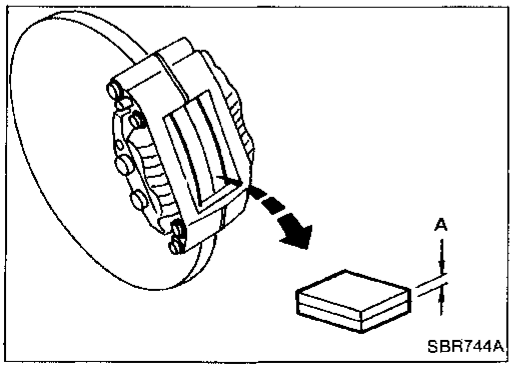

Inspection (On-vehicle)

DISC PAD

- Check pad shims for deformation or damage.
- Check disc pad for wear or damage.

Standard thickness (A):
11.5 mm (0.453 in)
Pad wear limit (A):
2.0 mm (0.079 in)

Removal and Installation

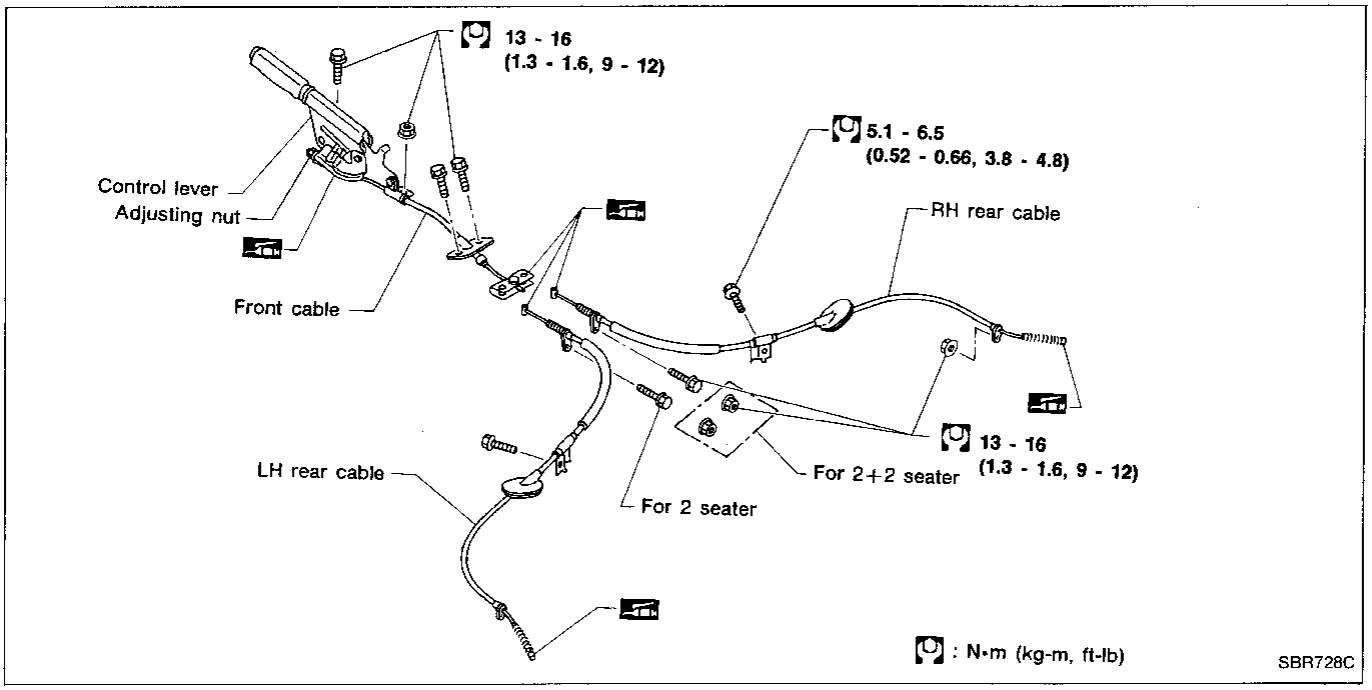

- Before removing parking brake control, remove console box.
- Loosen cable using control lever adjuster, and separate front and rear cables.

Apply multi-purpose grease to areas between control lever drum and cables.
Be careful not to damage boot and inner cable.

Inspection

1. Check control lever for wear or other damage. Replace if necessary.
2. Check parking brake cables, lamp and switch. Replace if necessary.
3. Check parts at each connecting portion for deformation or damage. If found, replace.

Adjustment

Perform shoe clearance adjustment before adjusting control lever stroke.

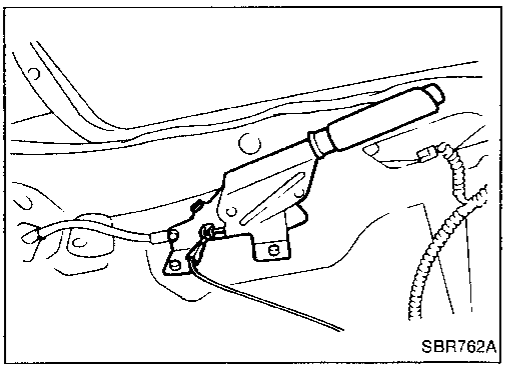

1. Turn adjusting nut.
2. Pull control lever with specified amount of force. Check lever stroke and ensure smooth operation.
   Number of notches at 196 N (20 kg, 44 lb): 6 - 7
3. Bend parking brake warning lamp switch plate so that brake warning light comes on when ratchet at parking brake lever is pulled "A" notches and goes out when fully released.
   Number of notches "A": 1

Shoe
Guide plate
Return spring
Strut
Spring
Return spring
Adjuster
Adjusting screw spring
Baffle plate
Anti-rattle spring
Retainer
Anti-rattle pin
Anti-rattle spring
Retainer
Anti-rattle pin
: Brake grease point
SBR763A

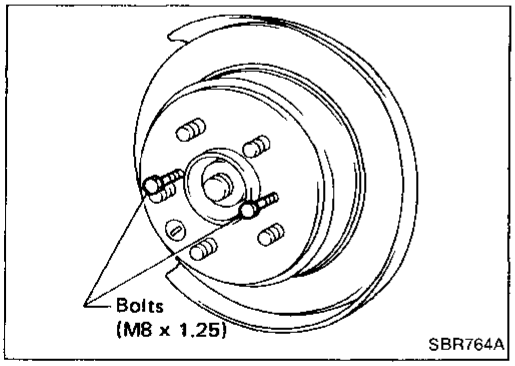

Shoe Replacement

1. Remove disc rotor (With parking drum brake).
   Tighten two bolts gradually if disc rotor is hard to remove.

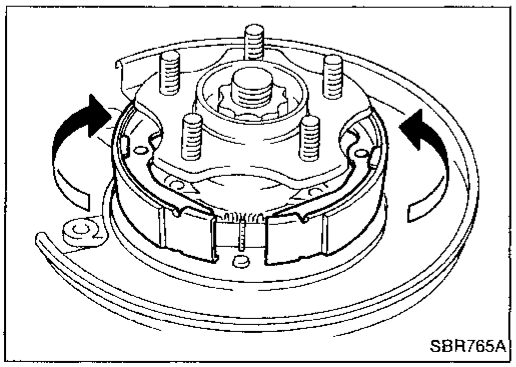

2. After removing anti-rattle pin, remove spring by rotating shoes.

Be careful not to damage parking brake cable when separating it.

Shoe Replacement (Cont'd)

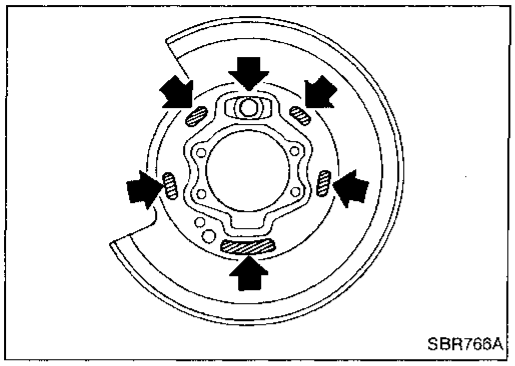

3. Apply brake grease to the contact areas shown at left.

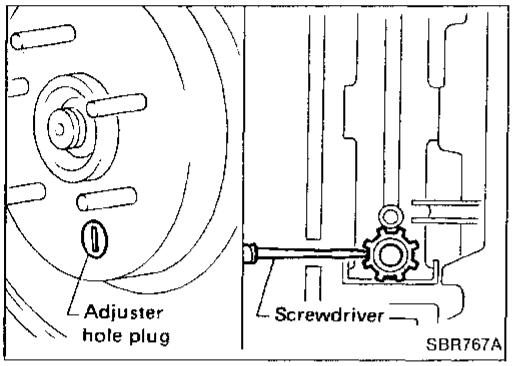

Shoe Clearance Adjustment

1. Remove adjuster hole plug, and turn adjuster wheel with a screwdriver until shoe touches brake drum.

Make sure that parking control lever is released completely.

2. Return adjuster wheel 5 to 6 latches.
3. Install adjuster hole plug, and make sure that there is no drag between shoes and brake drum when rotating disc rotor.

Breaking in Parking Brake Shoes

When a new rotor/parking brake shoe is installed, or when braking performance is poor, perform the following break-in procedure.

1. Drive the unloaded vehicle on a safe, level and dry road.
2. Depress the release button of parking brake lever, then pull the lever with a force of 98 N (10 kg, 22 lb).
3. While holding the lever, continue to drive the vehicle forward 100 m (328 ft) at approximately 35 km/h (22 MPH).
4. Cool down parking brake for approx. five minutes.
5. While holding the lever, drive the vehicle in reverse 10 m (33 ft) at approximately 10 km/h (6 MPH).
6. Repeat steps 1 through 5 three times and then repeat only step 5 one more time.

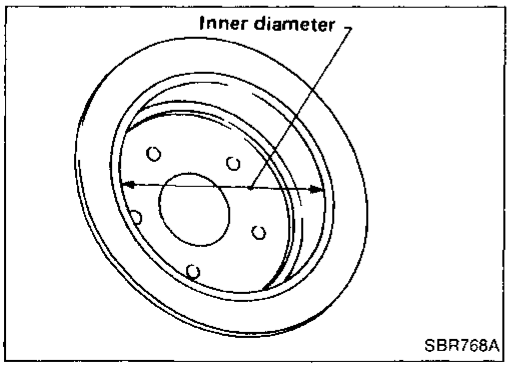

Drum Inspection

Standard inner diameter:
172.0 mm (6.77 in)
Maximum inner diameter:
173.0 mm (6.81 in)

System Components

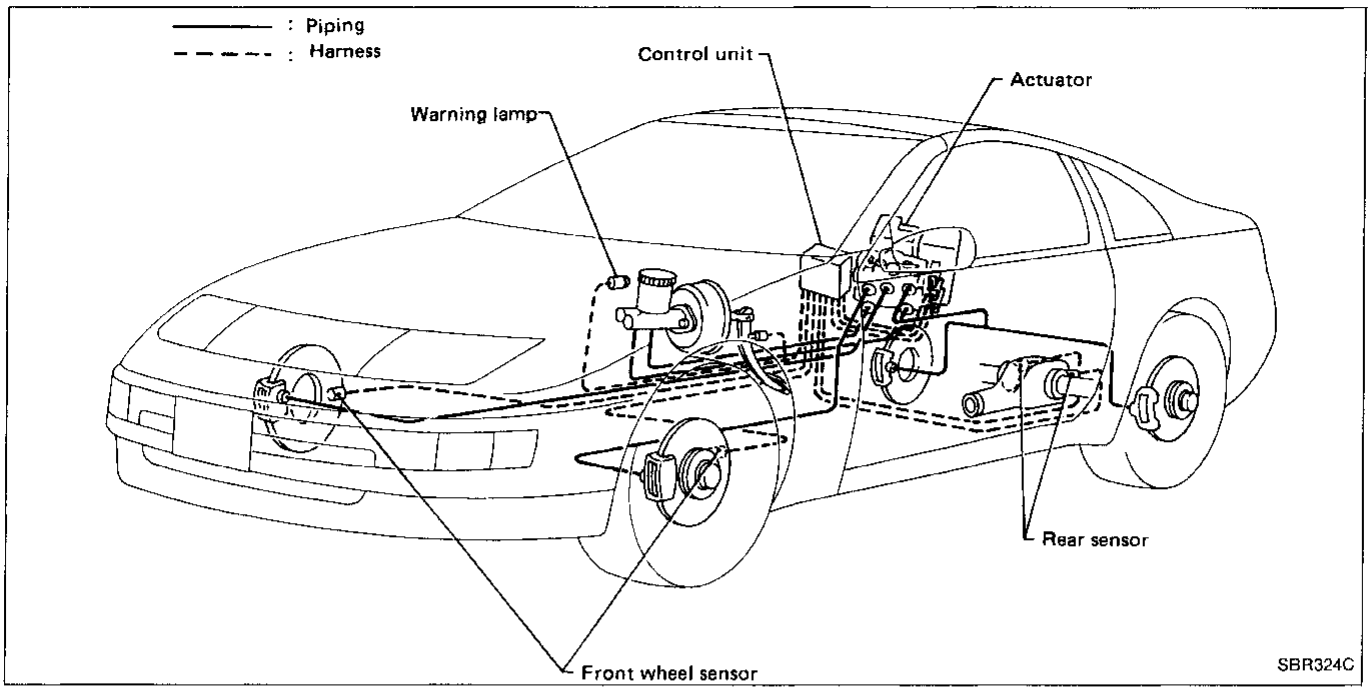

Hydraulic Circuit

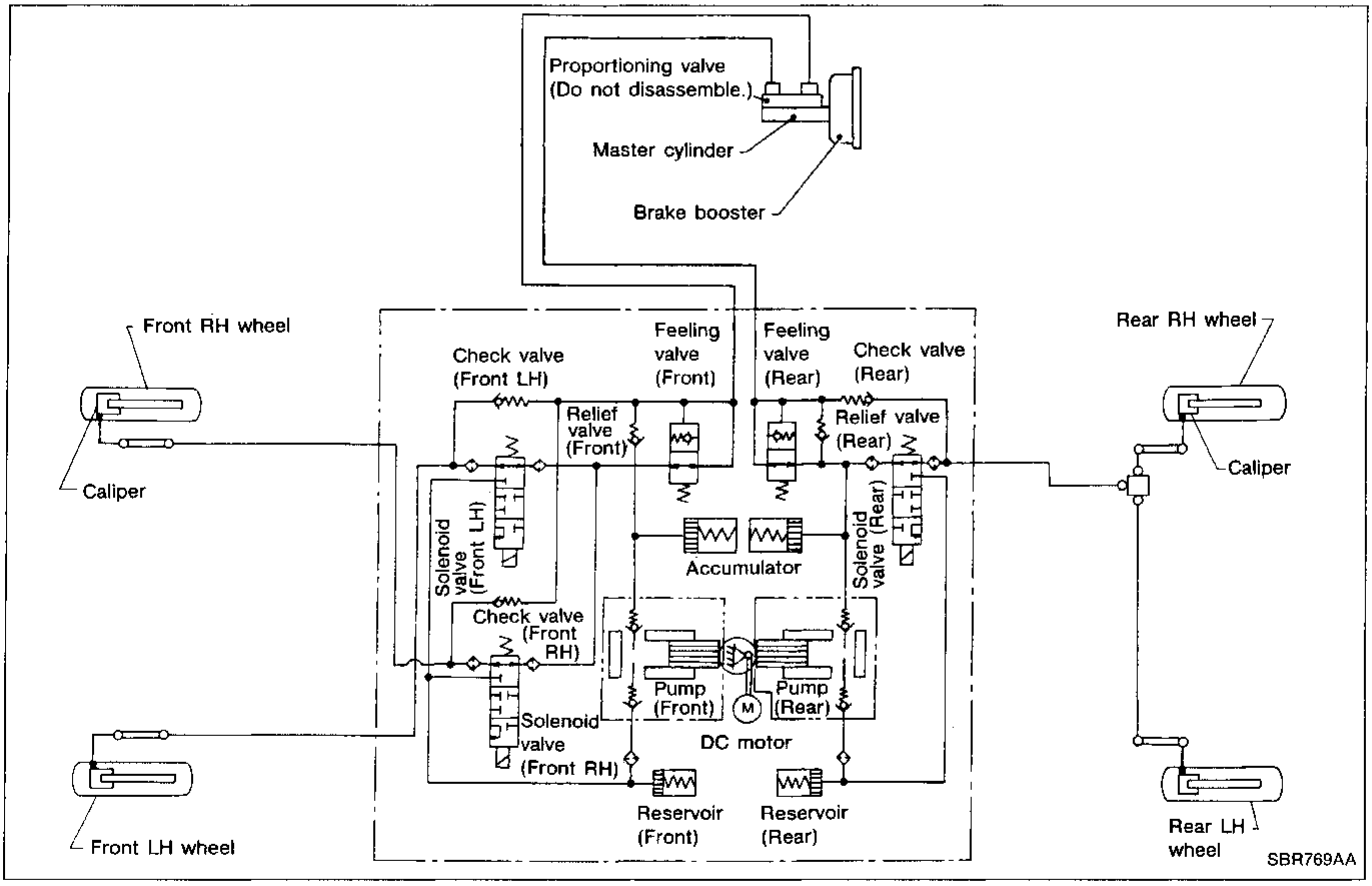

Wiring Diagram

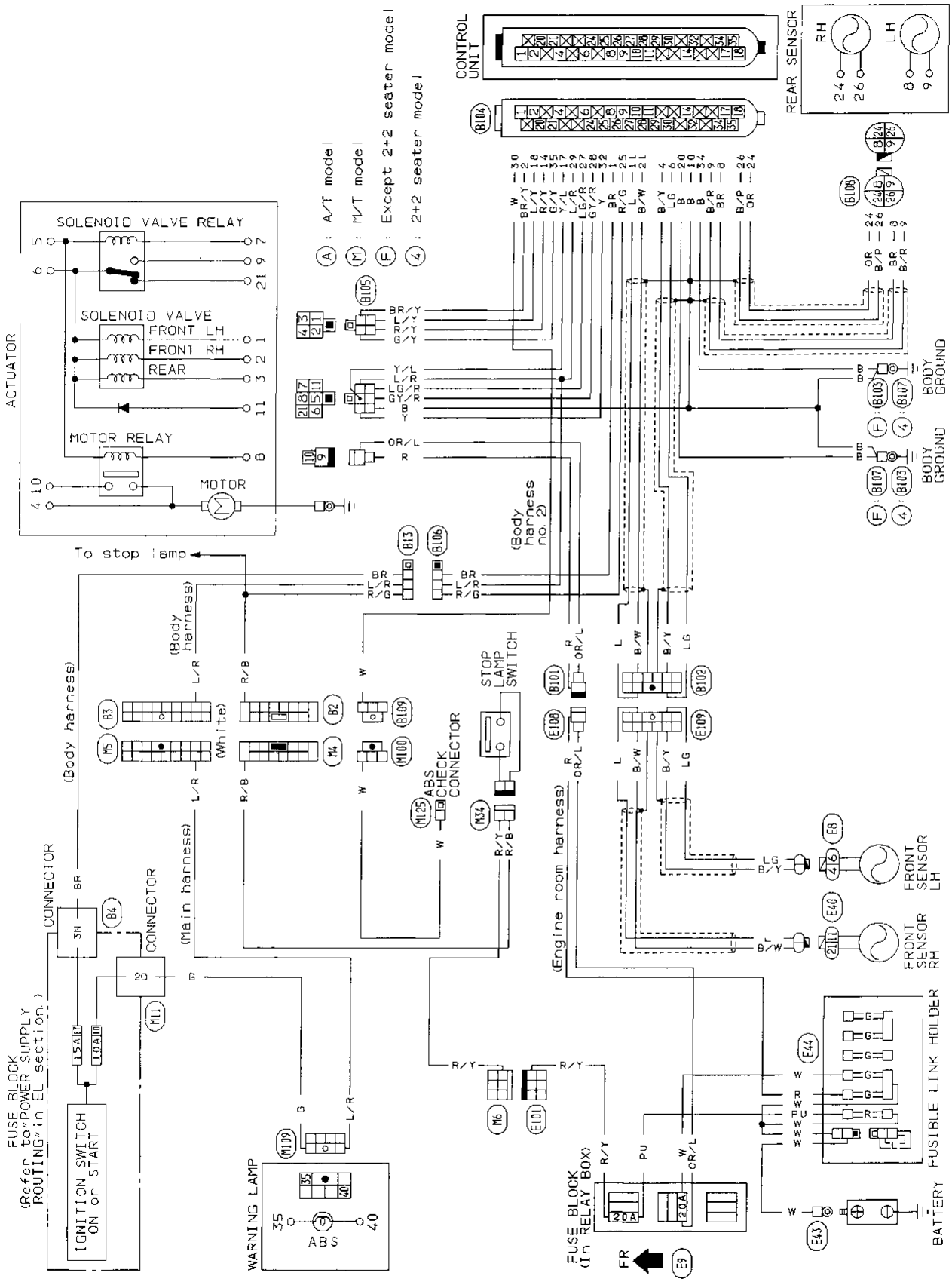

SBR721C

Removal and Installation

CAUTION:

Be careful not to damage sensor edge and sensor rotor teeth. In case the front wheel hub or final drive assembly needs to be removed, disconnect the ABS wheel sensor from the assembly and move it away. Failure to do so may result in damage to the sensor wires making the sensor inoperative.

FRONT WHEEL SENSOR

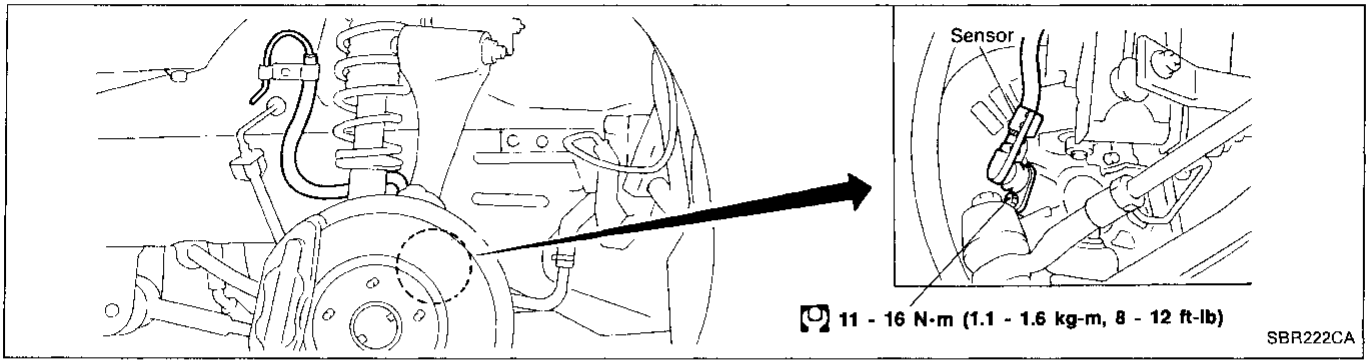

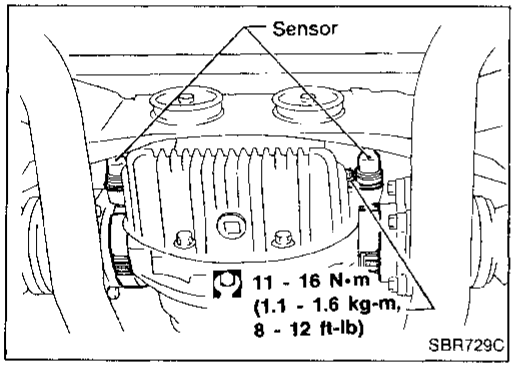

REAR SENSOR

- Remove rear sensor rotor with differential side flange after drive shaft removal.
  Refer to "Drive Shaft" in RA section.

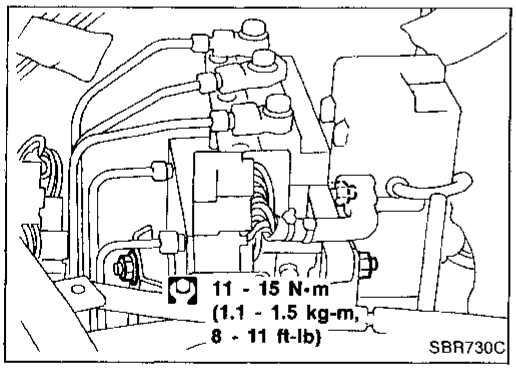

ACTUATOR

- Disconnect 3 connectors and brake tubes.
- Remove 3 nuts fixing actuator to bracket.

Contents

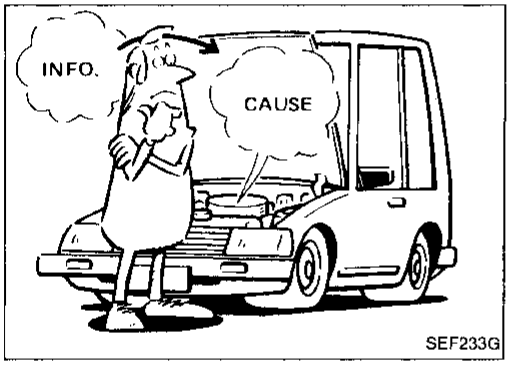

SEF233G

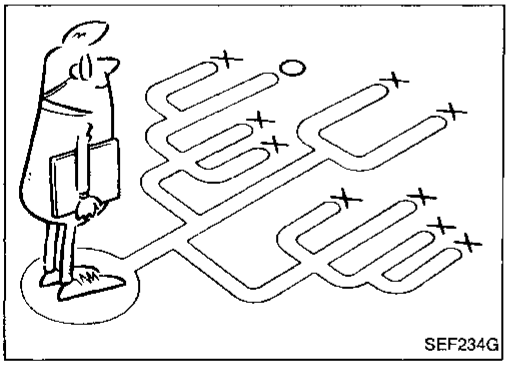
SEF234G

How to Perform Trouble Diagnoses for Quick and Accurate Repair

INTRODUCTION

The ABS system has an electronic control unit to control major functions. The control unit accepts input signals from sensors and instantly drives actuator. It is essential that both kinds of signals are proper and stable. At the same time, it is important that there are no conventional problems such as air leaks in the booster or lines, lack of brake fluid, or other problems with brake system.

It is much more difficult to diagnose a problem that occurs intermittently rather than continuously. Most intermittent problems are caused by poor electric connections or faulty wiring. In this case, careful checking of suspicious circuits may help prevent the replacement of good parts.

A visual check only may not find the cause of the problems, so a road test should be performed.

Before undertaking actual checks, take just a few minutes to talk with a customer who approaches with a ABS complaint. The customer is a very good source of information on such problems; especially intermittent ones. Through the talks with the customer, find out what symptoms are present and under what conditions they occur.

Start your diagnosis by looking for "conventional" problems first. This is one of the best ways to troubleshoot brake problems on an ABS controlled vehicle.

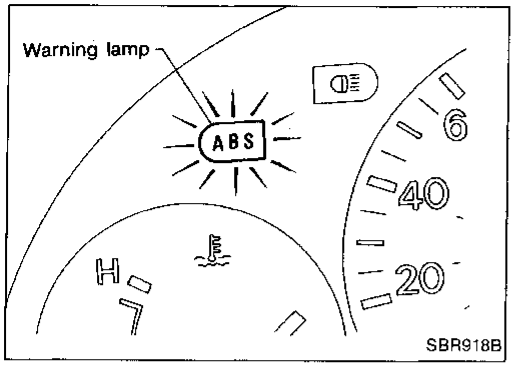

Self-diagnosis

FUNCTION

- When a problem occurs in the ABS, the warning lamp on the instrument panel comes on. The warning lamp is also lit by grounding the self-diagnostic (check) terminal located on the check connector to actuate the self-diagnostic results mode. The location of the malfunction is indicated by the warning lamp flashing on the instrument panel.

SELF-DIAGNOSIS PROCEDURE

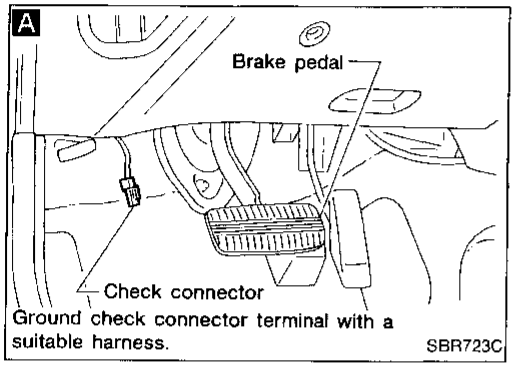

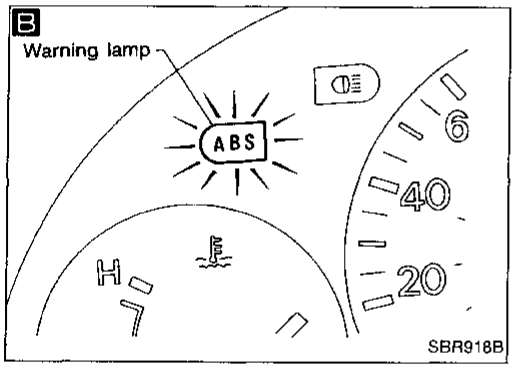

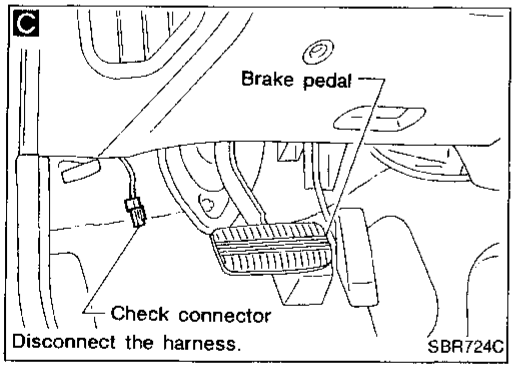

Drive vehicle over 30 km/h (20 MPH) for at least one minute.

↓

Turn ignition switch "OFF".

↓

A

Ground terminal "L" of check connector with a suitable harness.

↓

Turn ignition switch "ON" while grounding terminal "L".
Do not depress brake pedal.

↓

B

After 3.6 seconds, the warning lamp starts flashing to indicate the malfunction code No. (See NOTE 1.)

↓

After verifying the location of the malfunction with the malfunction code chart, make the necessary repairs following the instructions in the diagnostic procedures.

↓

After the malfunctions are repaired, erase the malfunction codes stored in the control unit. See "HOW TO ERASE SELF-DIAGNOSTIC RESULTS" (BR-26).

↓

Rerun the self-diagnostic results mode to verify that the malfunction codes have been erased.

↓

C

Disconnect the check terminal from the ground. The self-diagnostic results mode is now complete.

↓

Ⓐ

NOTE 1: The indication terminates after five minutes. However, when the ignition switch is turned from "OFF" to "ON", the indication starts flashing again.

Self-diagnosis (Cont'd)

Ⓐ

Check warning lamp for deactivation after driving vehicle over 30 km/h (20 MPH) for at least one minute.

After making certain that warning lamp does not come on, test the ABS in a safe area to verify that it functions properly.

HOW TO READ SELF-DIAGNOSTIC RESULTS (Malfunction codes)

- Determine the code No. by counting the number of times the warning lamp flashes on and off.
- When several malfunctions occur at one time, up to three code Nos. can be stored; the latest malfunction will be indicated first.
- The indication begins with the start code 12, after which a maximum of three code Nos. appear in the order of the latest one first. The indication then returns to the start code to repeat (the indication will stay on for five minutes at the most).
- The malfunction code chart is given on the next page.

Example: Code No. 32 REAR SENSOR SHORT-CIRCUIT

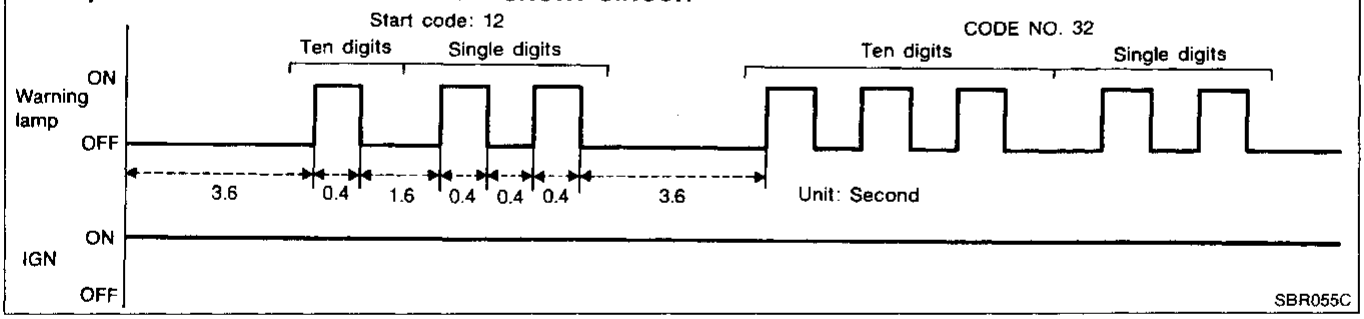

Self-diagnosis (Cont'd)

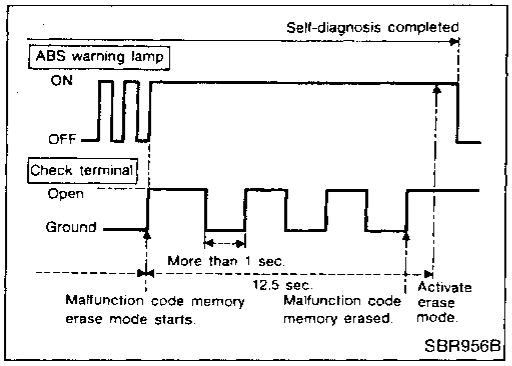

HOW TO ERASE SELF-DIAGNOSTIC RESULTS (Malfunction codes)

a. Under the self-diagnostic results mode, the malfunction memory erase mode starts when the check terminal is disconnected from the ground.

b. The self-diagnostic results (malfunction codes) can be erased by grounding the check terminal more than three times in succession within 12.5 seconds after the erase mode starts. (Each grounding must be longer than one second.)
The ABS warning lamp stays on while the self-diagnosis is in the erase mode, and goes out after the erase operation has been completed.
The self-diagnosis is also completed at the same time.

After the erase operation is completed, it is necessary to rerun the self-diagnostic mode to verify that malfunction codes no longer appear. Only the start code should be indicated when erase operation is completed and system is functioning normally.

MALFUNCTION CODE CHART

Code No.	Malfunctioning part	Diagnostic procedure
45	Front left actuator solenoid valve	3
41	Front right actuator solenoid valve	
55	Rear actuator solenoid valve	
25	Front left sensor (open-circuit)	4
26	Front left sensor (short-circuit)	
21	Front right sensor (open-circuit)	
22	Front right sensor (short-circuit)	
35	Rear left sensor (open-circuit)	
36	Rear left sensor (short-circuit)	
31	Rear right sensor (open-circuit)	
32	Rear right sensor (short-circuit)	
18	Sensor rotor	
61	Actuator motor or motor relay	5
63	Solenoid valve relay circuit (except power supply for relay coil)	6
57	Power supply (Low voltage)	7
16	Stop lamp switch circuit	8
71	Control unit	9
Warning lamp stays on when ignition switch is turned on.	Control unit power supply circuit Warning lamp bulb circuit Control unit or control unit connector Solenoid valve relay stuck Power supply for solenoid valve relay coil	2
Warning lamp stays on only during self-diagnosis.	Control unit	—
Warning lamp does not come on when ignition switch is turned on.	Fuse, warning lamp bulb or warning lamp circuit Control unit	1
Warning lamp does not come on only during self-diagnosis.	Control unit	—

Component Parts and Harness Connector Location

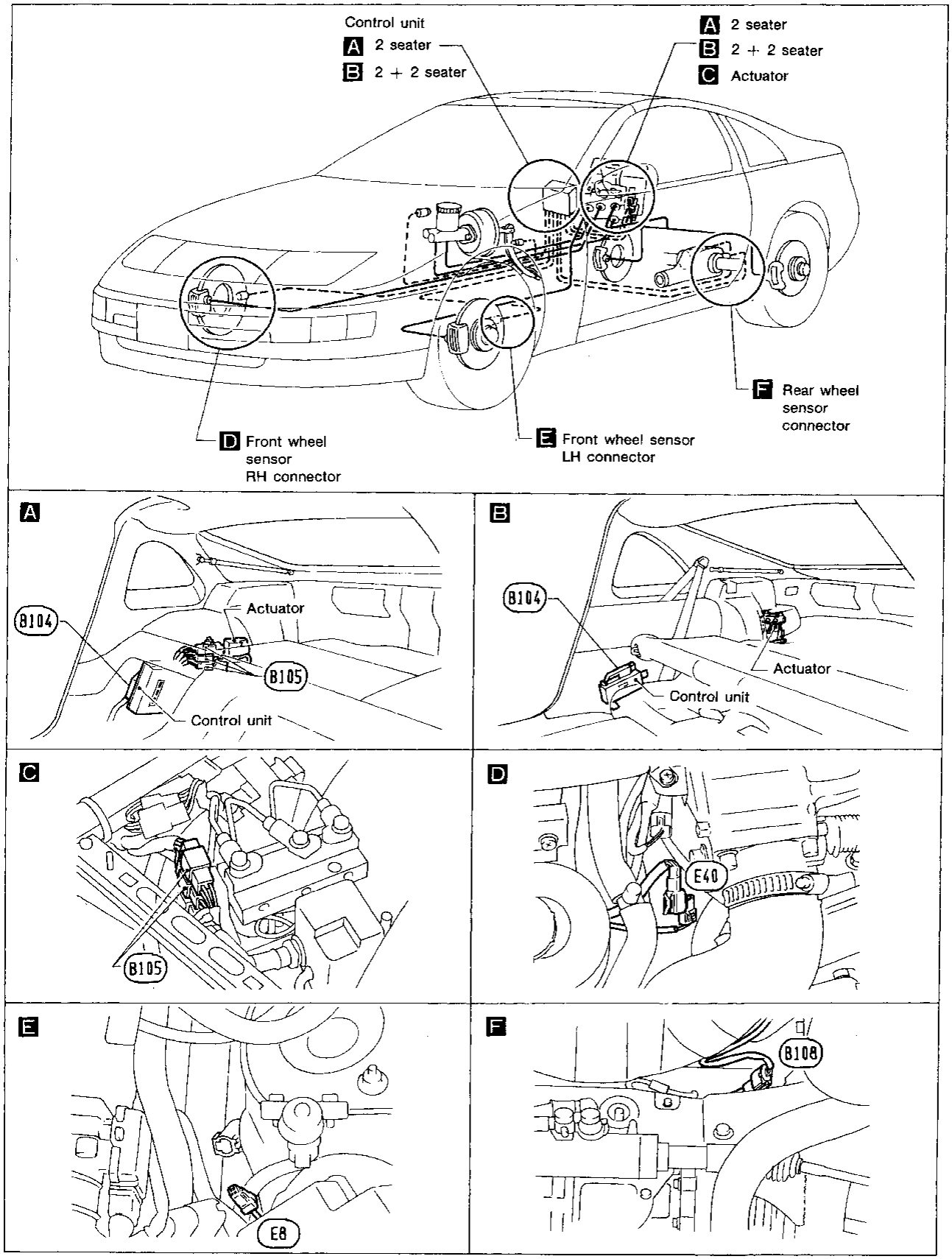

SBR731C

Preliminary Check 1

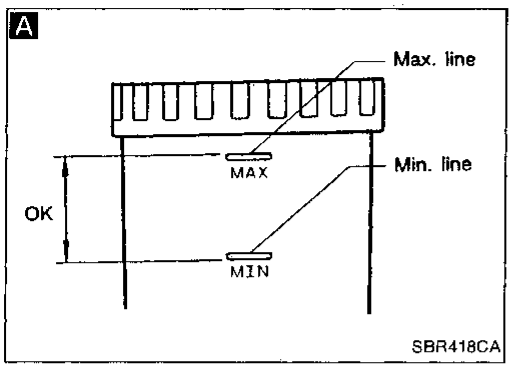

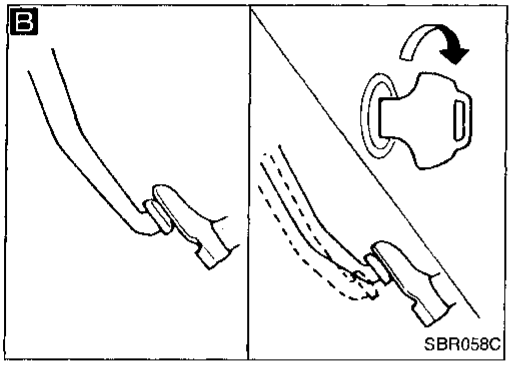

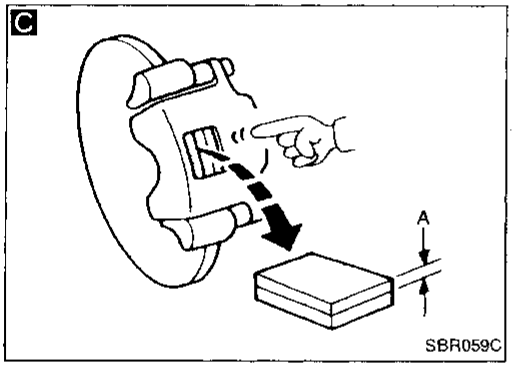

A

Check brake fluid level in reservoir tank.

Low fluid level may indicate brake pad wear or leakage from brake line.

↓

Check brake line for leakage. — NG → Repair.

OK ↓

B

Check brake booster for operation and air tightness.
Refer to "Inspection" of BRAKE BOOSTER (BR-9). — NG → Replace.

OK ↓

C

Check brake pads and rotor.
Refer to "Inspection" of FRONT and REAR DISC BRAKES (BR-12, 15). — NG → Replace.

OK ↓

A

Check brake fluid level in reservoir tank. — NG → Fill up brake fluid.

OK ↓

END

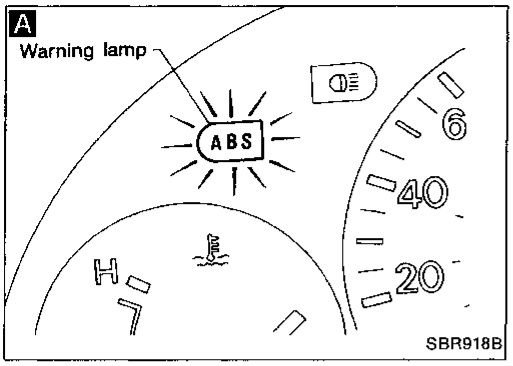

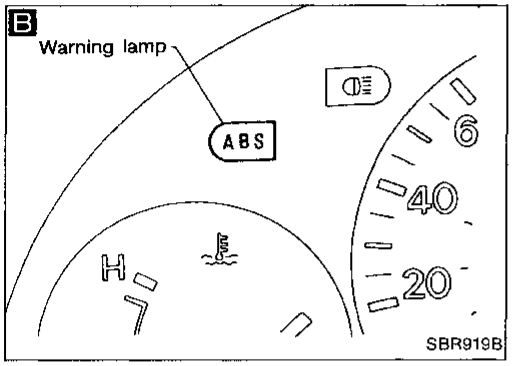

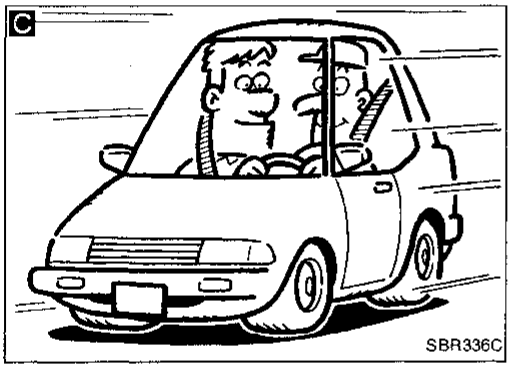

Preliminary Check 2

A

Check warning lamp activation. When ignition switch is turned on, warning lamp turns on.

NG → Check fuse, warning lamp bulb and warning lamp circuit.

OK ↓

B

Check warning lamp for deactivation. When ignition switch is turned on warning lamp turns on, then deactivates after 1 second.

NG → Go to Self-diagnosis (BR-24).

OK ↓

C

Drive vehicle at 30 km/h (19 MPH) for at least one minute.

↓

B

Ensure warning lamp remains off while driving.

NG → Go to Self-diagnosis (BR-24).

OK ↓

END

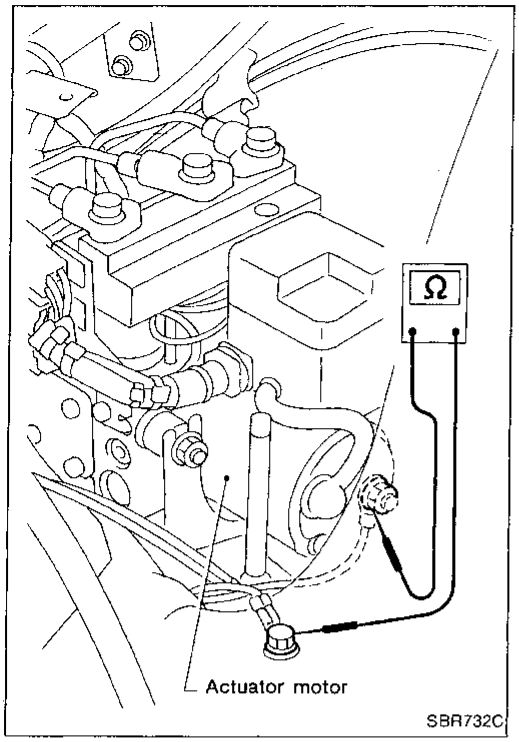

Ground Circuit Check

ACTUATOR MOTOR GROUND

- Check resistance between actuator motor ground terminal and body ground.
  Resistance: 0Ω

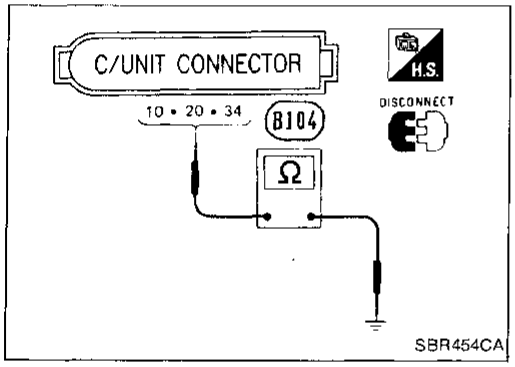

CONTROL UNIT GROUND

- Check resistance between both terminals.
  Resistance: 0Ω

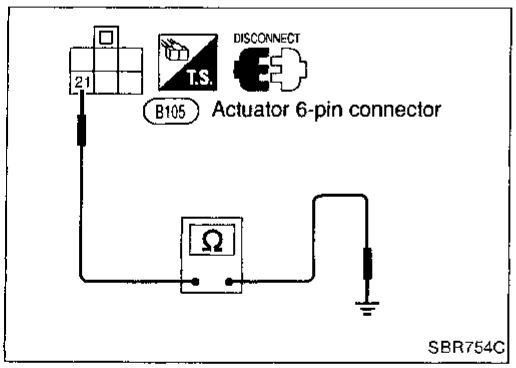

ACTUATOR GROUND

- Check resistance between actuator harness 6-pin connector (actuator side) terminal ㉑ and ground.
  Resistance: 0Ω

Circuit Diagram for Quick Pinpoint Check

- The unit side connectors with a double circle "⬭" are connected to the harness side connectors shown in the "Component Parts and Connector Location".
- The terminal numbers in the connector coincide with the circuit numbers surrounded by a single circle " ○ ".

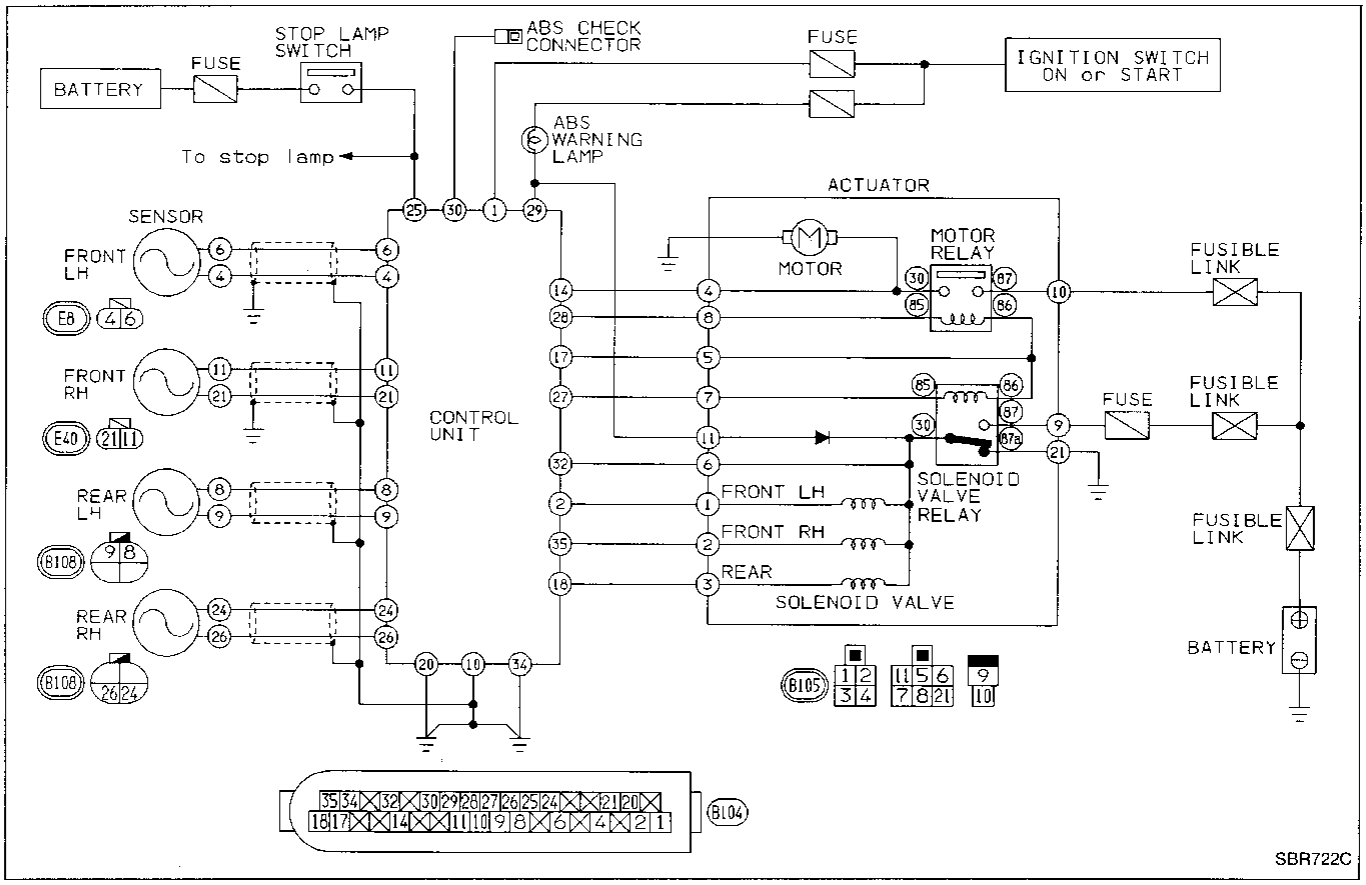

Diagnostic Procedure 1 (Not self-diagnostic item)

Warning lamp does not work before engine starts.

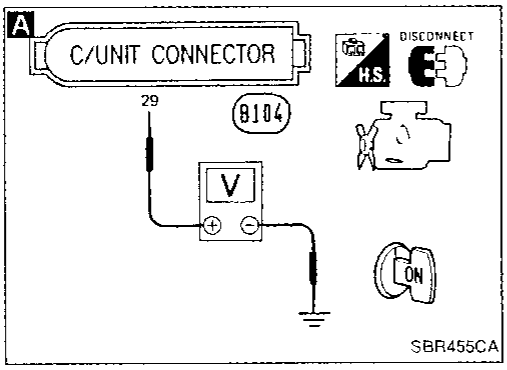

WARNING LAMP CIRCUIT CHECK

Check 10A fuse for warning lamp. For fuse layout, refer to "POWER SUPPLY ROUTING" in EL section.

NG → Replace fuse.

OK ↓

Check warning lamp bulb.

NG → Replace bulb.

OK ↓

A

- Install 10A fuse and bulb.
- Disconnect connectors from control unit and actuator.
- Check voltage between control unit terminal ㉙ and ground after turning ignition switch "ON".

Battery voltage should exist after turning ignition switch "ON".

NG → Repair harness and connectors.

OK ↓

Carry out self-diagnosis (BR-24).

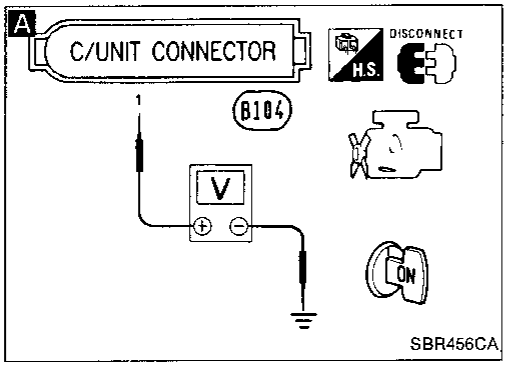

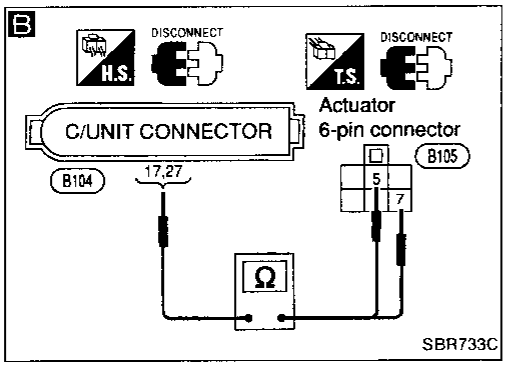

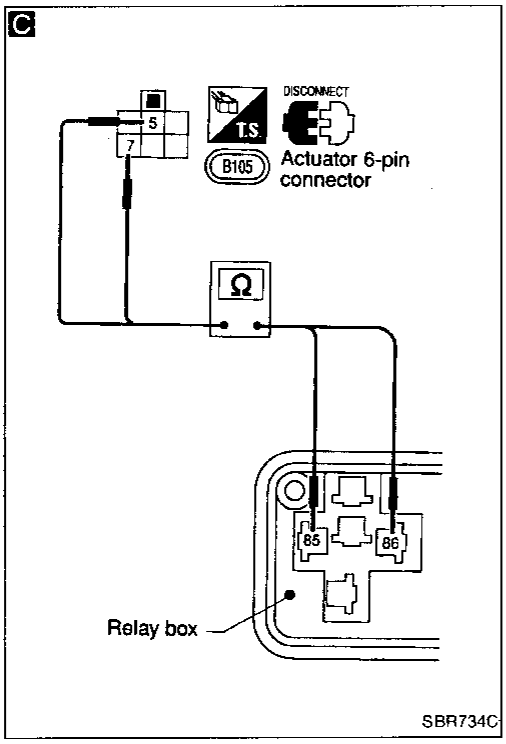

Diagnostic Procedure 2 (Not Self-diagnostic item)

Warning lamp stays on continuously.

CONTROL UNIT POWER SUPPLY CIRCUIT

Check 15A fuse for control unit. For fuse layout, refer to "POWER SUPPLY ROUTING" in EL section.

NG → Ⓑ

OK ↓

A

- Disconnect connector from control unit.
- Check voltage between control unit connector terminal ① and ground after turning ignition switch "ON".
  Battery voltage should exist.

NG → Repair harness and connector.

OK ↓

B

SOLENOID VALVE RELAY COIL POWER SUPPLY CIRCUIT.

NG → Repair harness and connector.

- Turn ignition switch "OFF". Disconnect actuator 6-pin connector.
- Check continuity between control unit connector terminals and actuator 6-pin connector (actuator side) terminals.

Control unit	Actuator
⑰	⑤
㉗	⑦

Continuity should exist.

OK ↓

C

CIRCUIT CHECK

NG → Replace actuator.

- Disconnect solenoid valve relay.
- Check continuity between actuator 6-pin connector (actuator side) terminals and solenoid valve relay box terminals.

Actuator	Relay box
⑤	⑧⑥
⑦	⑧⑤

Continuity should exist.

OK ↓

SOLENOID VALVE RELAY CHECK

NG → Replace solenoid valve relay.

Refer to SOLENOID VALVE RELAY in Electrical Components Inspection (BR-45).

OK ↓

Ⓐ

Diagnostic Procedure 1 (Not self-diagnostic item) (Cont'd)

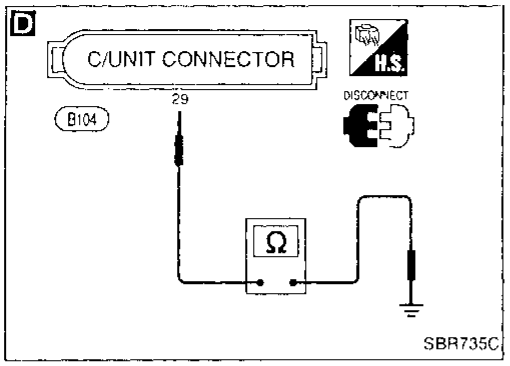

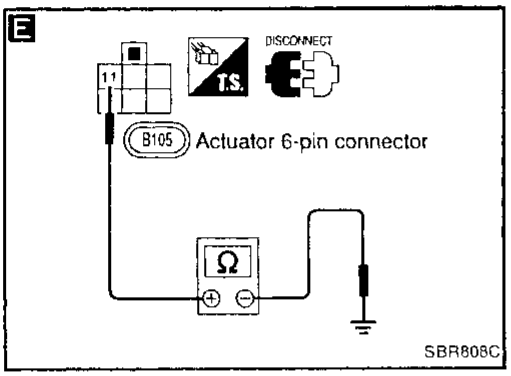

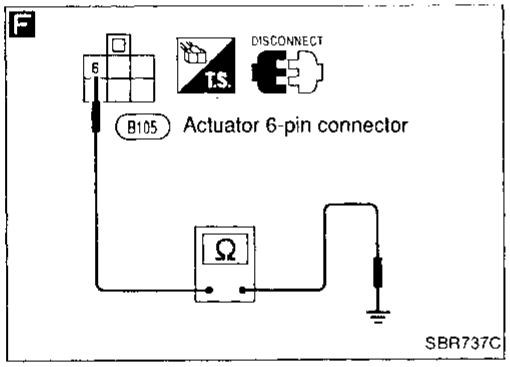

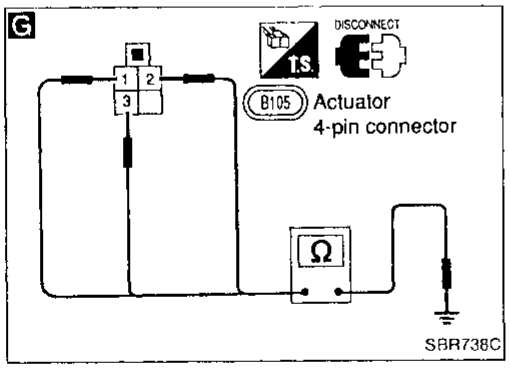

Ⓐ

D

GROUND-SHORT CHECK FOR WARNING LAMP CIRCUIT.

- Turn ignition switch "OFF".
- Disconnect connectors from control unit and actuator.
- Check continuity between control unit connector terminal ㉙ and body ground.

Continuity should not exist.

NG → Repair harness and connector.

OK ↓

E

- Disconnect actuator 6-pin connector.
- Check continuity between actuator 6-pin connector (actuator side) terminal ⑪ and body ground.

Continuity should not exist.

Pay attention to tester polarity.

NG → Replace actuator assembly.

OK ↓

F

SOLENOID VALVE CHECK CIRCUIT

- Check continuity between actuator 6-pin connector (body side) terminal ⑥ and body ground.

Continuity should not exist.

NG → Repair harness and connector.

OK ↓

G

SOLENOID VALVE CIRCUIT

- Disconnect actuator 4-pin connector.
- Check continuity between actuator 4-pin connector (actuator side) terminals ①, ②, ③ and body ground.

Continuity should not exist.

NG → Replace actuator assembly.

OK ↓

Replace control unit.

Diagnostic Procedure 2 (Not Self-diagnostic item) (Cont'd)

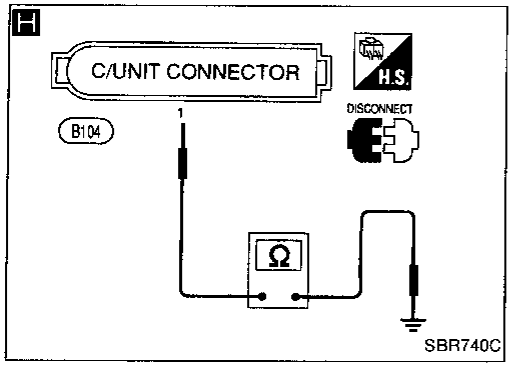

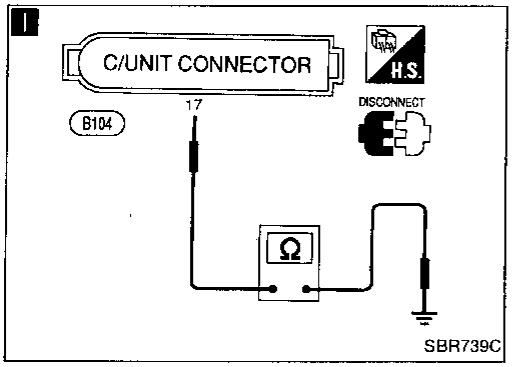

Ⓑ

- Replace 15A fuse.
  Is the fuse blown out when ignition switch is turned "ON"?

No → Inspection end

Yes ↓

H

CONTROL UNIT POWER SUPPLY CIRCUIT.

- Disconnect control unit connector.
- Check continuity between control unit connector terminal ① and body ground.
  Continuity should not exist.

NG → Repair harness and connector.

OK ↓

I

- Check continuity between control unit connector terminal ⑰ and body ground.
  Continuity should not exist.

NG → Repair harness and connector.

OK ↓

Replace control unit.

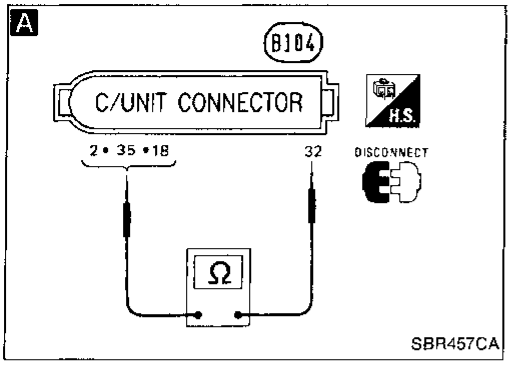

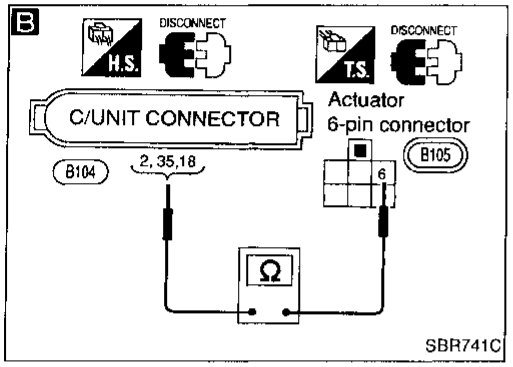

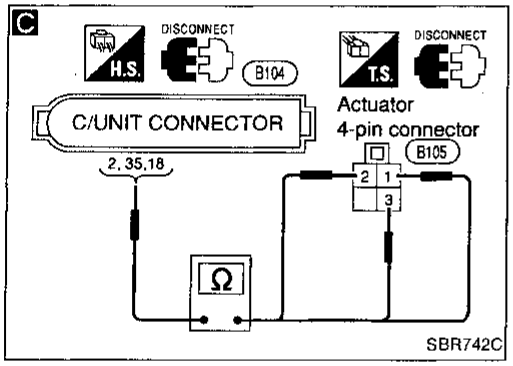

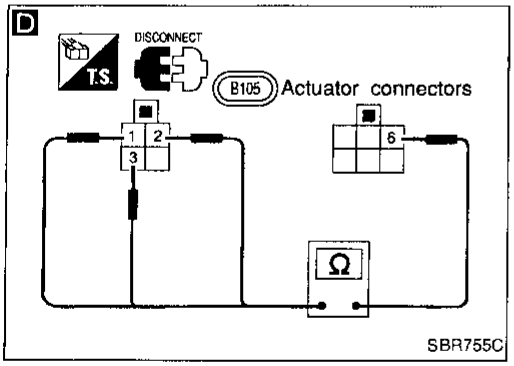

Diagnostic Procedure 3

ACTUATOR SOLENOID VALVE (Malfunction code No. 45, 41 or 55)

A

ACTUATOR SOLENOID VALVE CHECK.

- Disconnect control unit connector.
- Check resistance between control unit connector terminals.

Code No.	Terminals
45	㉜ - ②
41	㉜ - ㉟
55	㉜ - ⑱

Resistance: 0.8 - 1.5Ω

OK → Replace control unit.

NG ↓

B

- Disconnect actuator 6-pin connector.
- Check resistance between control unit connector terminals and actuator 6-pin connector (actuator side) terminal.

Code No.	Control unit	Actuator
45	②	⑥
41	㉟	⑥
55	⑱	⑥

Resistance: 0.8 - 1.5Ω

OK → Repair harness and connector between control unit connector terminal ㉜ and actuator 6-pin connector terminal ⑫.

NG ↓

C

- Disconnect actuator 4-pin connector.
- Check continuity between control unit connector terminals and actuator 4-pin connector (body side) terminals.

Code No.	Control unit	Actuator
45	②	①
41	㉟	②
55	⑱	③

Continuity should exist.

NG → Repair harness and connector.

OK ↓

D

- Disconnect actuator connectors.
- Check resistance between actuator connector (actuator side) terminals.

Code No.	Terminals
45	⑥ - ①
41	⑥ - ②
55	⑥ - ③

Resistance: 0.8 - 1.5Ω

OK → Repair harness between actuator relay connector and control unit connector.

NG ↓

Replace actuator.

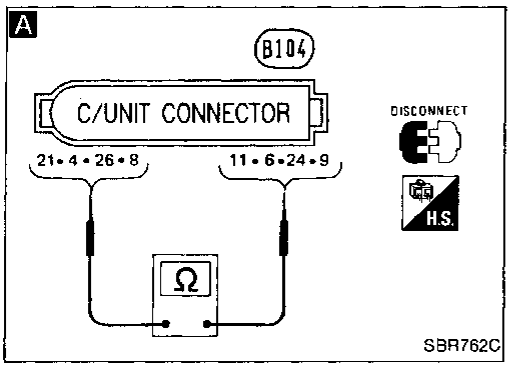

Diagnostic Procedure 4

WHEEL SENSOR OR ROTOR

(Malfunction code No. 21, 22, 25, 26, 31, 32, 35, 36 or 18)

A

WHEEL SENSOR ELECTRICAL CHECK

- Disconnect control unit connector.
- Check resistance between control unit connector terminals.
  Code No. 21 or 22 (Front RH wheel)
  Terminals ㉑ and ⑪
  Code No. 25 or 26 (Front LH wheel)
  Terminals ④ and ⑥
  Code No. 31 or 32 (Rear RH wheel)
  Terminals ㉖ and ㉔
  Code No. 35 or 36 (Rear LH wheel)
  Terminals ⑧ and ⑨
  Resistance: 0.8 - 1.2 kΩ

OK → Ⓐ (See next page.)

NG ↓

Note

CHECK WHEEL SENSOR

Refer to WHEEL SENSOR in Electrical Components Inspection (BR-45).

NG → Note: Replace wheel sensor.

OK ↓

Note

Repair harness and connectors between control unit connector and wheel sensor connector.

Note: Wheel position should be distinguished by code No. except code No. 18 (sensor rotor).

Diagnostic Procedure 4 (Cont'd)

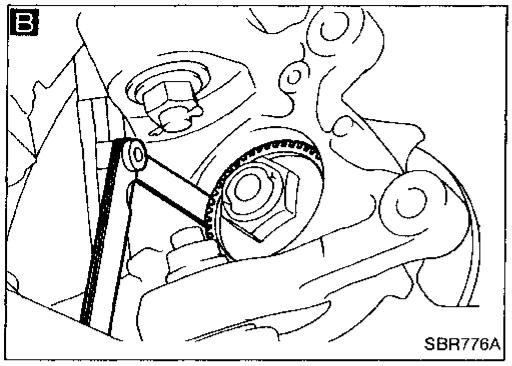

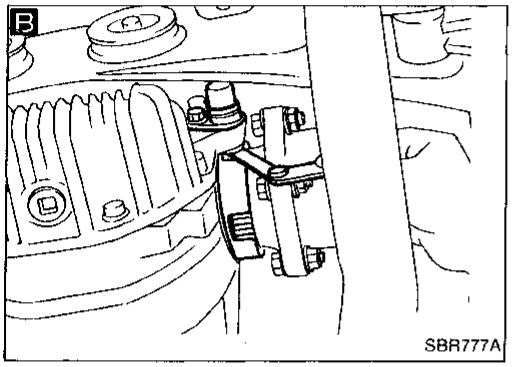

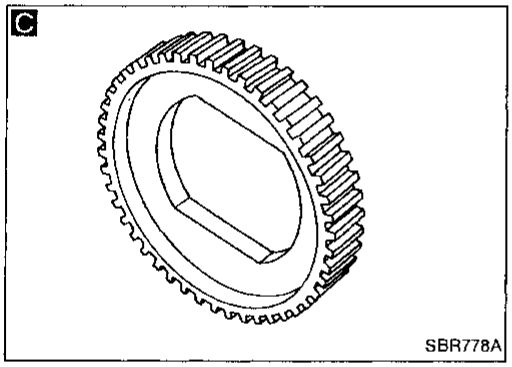

Ⓐ

Note

WHEEL SENSOR MECHANICAL CHECK

Check for inflation pressure, wear and size of each tire.

NG → Note: Adjust tire pressure or replace tire(s).

OK ↓

Note

Check wheel bearing axial end play. Refer to "Front/Rear Wheel Bearing" in FA/RA section.

NG → Note: Follow the direction in FA/RA section.

OK ↓

B Note

Check clearance between sensor and rotor.

Clearance:

Front:

0.22 - 0.71 mm

(0.0087 - 0.0280 in)

Rear:

0.06 - 0.93 mm

(0.0024 - 0.0366 in)

NG → Note: Clean sensor fixing portion, or replace sensor.

OK ↓

C Note

Check sensor rotor for teeth damage.
Number of teeth: 46

NG → Note: Replace sensor rotor (with drive shaft, wheel hub).

OK ↓

Replace control unit.

Note: Wheel position should be distinguished by code No. except code No. 18 (sensor rotor).

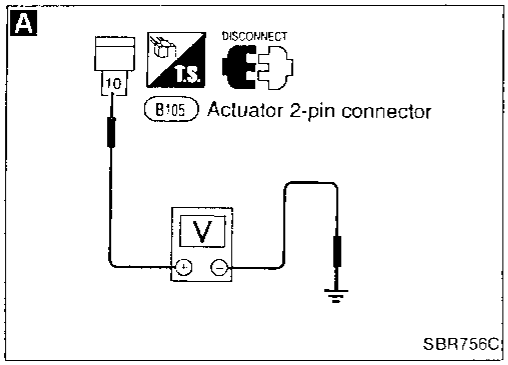

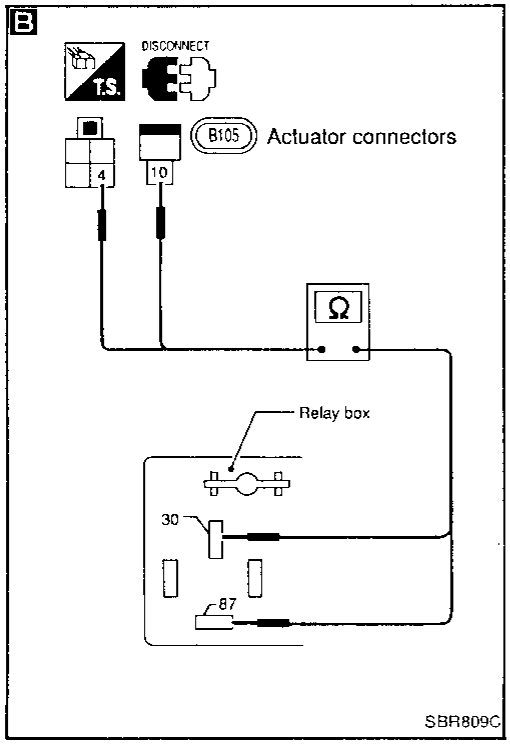

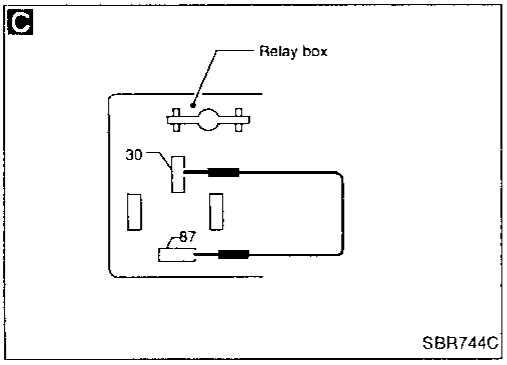

Diagnostic Procedure 5

MOTOR RELAY OR MOTOR

(Malfunction code No. 61)

MOTOR POWER SUPPLY CIRCUIT

- Check fusible link for actuator. For fusible link layout, refer to wiring diagram (BR-21).

NG → Ⓑ

OK ↓

A

- Disconnect actuator 2-pin connector.
- Check voltage between connector (body side) terminal ⑩ and ground.
  Battery voltage should exist.

NG → Repair harness and connectors.

OK ↓

B

MOTOR RELAY CIRCUIT

- Remove motor relay.
- Disconnect actuator connectors.
- Check continuity between actuator connector (actuator side) terminals and relay connector terminals.

Actuator connector	Relay connector
⑩	⑧⑦
④	⑧⑥

Continuity should exist.

NG → Replace actuator assembly.

OK ↓

C

MOTOR CHECK

- Connect actuator connectors.
- Connect suitable wire between relay connector terminals ⑧⑦ and ⑧⑥.
  Motor should operate.
  Do not connect wire for more than 5 seconds.

NG → Replace actuator assembly.

OK ↓

MOTOR RELAY CHECK

Refer to MOTOR RELAY in Electrical Components Inspection (BR-45).

NG → Replace motor relay.

OK ↓

Ⓐ

Diagnostic Procedure 5 (Cont'd)

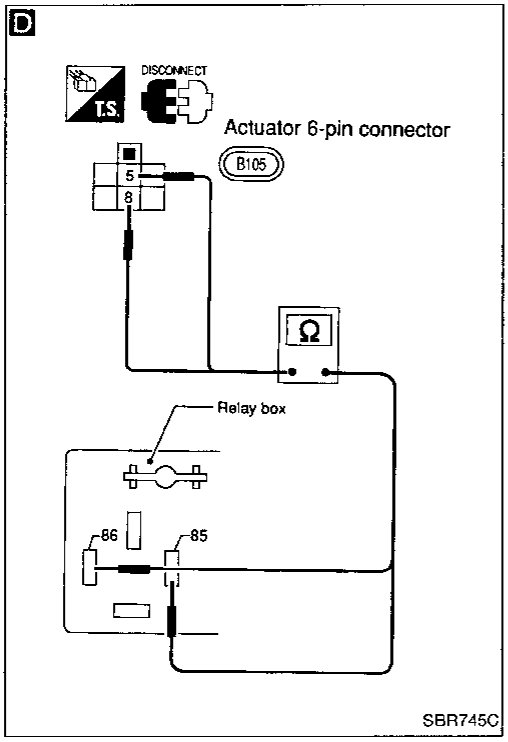

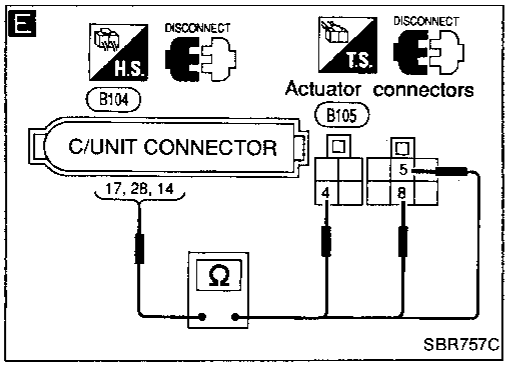

Ⓐ

D

MOTOR RELAY CIRCUIT

- Disconnect actuator 6-pin connector.
- Check continuity between actuator connector (actuator side) terminals and relay connector terminals.

Actuator connector	Relay connector
⑤	⑧⑥
⑧	⑧⑤

Continuity should exist.

NG → Replace actuator assembly.

OK ↓

E

CIRCUIT CHECK

- Disconnect control unit connector.
- Check continuity between control unit connector terminals and actuator connector (body side) terminals.

Control unit	Actuator relay
⑰	⑤
㉘	⑧
⑭	④

Continuity should exist.

NG → Repair harness and connectors.

OK ↓

Replace control unit.

NG → Repair harness and connectors.

Diagnostic Procedure 5 (Cont'd)

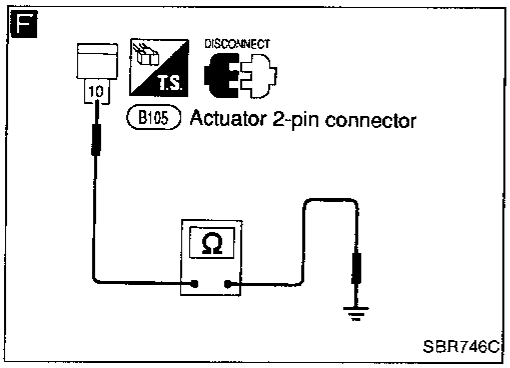

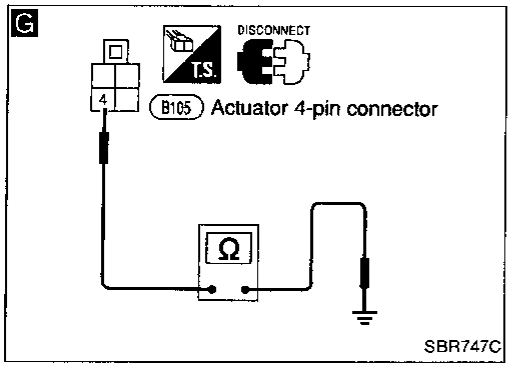

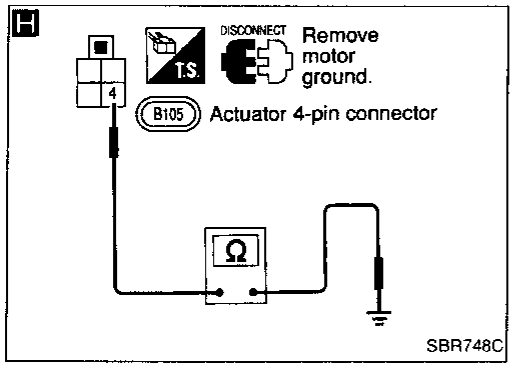

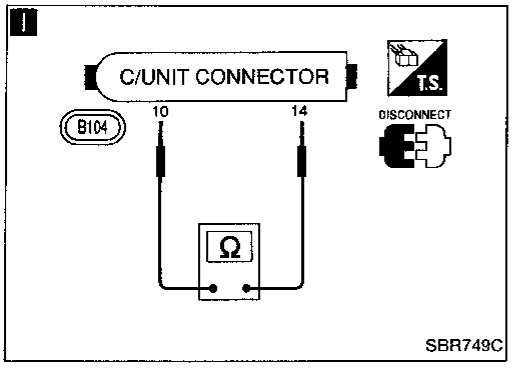

Ⓑ

- Replace fusible link.
  Is the fusible link blown out when ignition switch is turned "ON"?

No → Inspection end

Yes ↓

F

MOTOR POWER SUPPLY CIRCUIT

- Disconnect actuator 2-pin connector.
- Check continuity between actuator 2-pin connector (body side) terminal ⑩ and ground.
  Continuity should not exist.

NG → Repair harness and connector.

OK ↓

G

- Disconnect actuator 4-pin connector and control unit connector.
- Check continuity between actuator 4-pin connector (body side) terminal ④ and ground.
  Continuity should not exist.

NG → Repair harness and connector.

OK ↓

H

- Remove motor ground.
- Check continuity between actuator 4-pin connector (actuator side) terminal ④ and ground.
  Continuity should not exist.

NG → Replace actuator assembly.

OK ↓

I

- Check continuity between control unit terminals ⑭ and ⑩.
  Continuity should not exist.

NG → Replace control unit.

OK ↓

Replace actuator assembly.

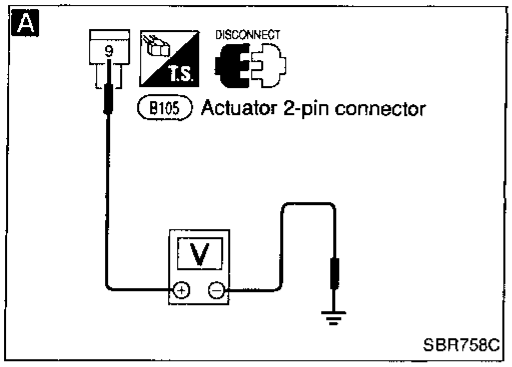

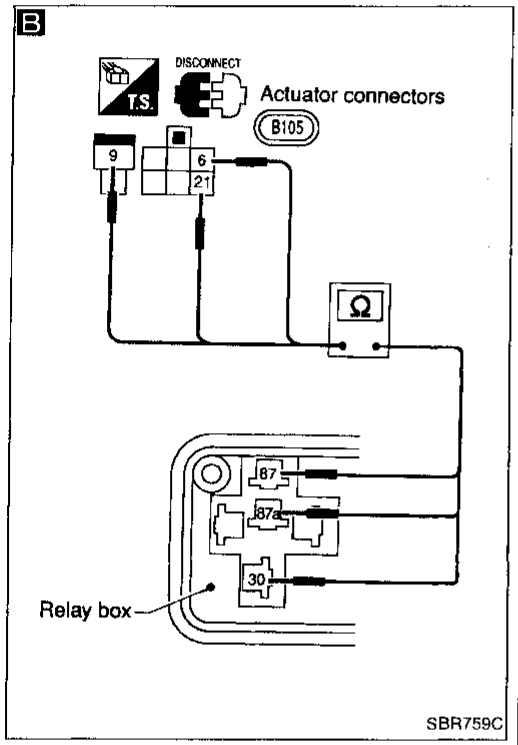

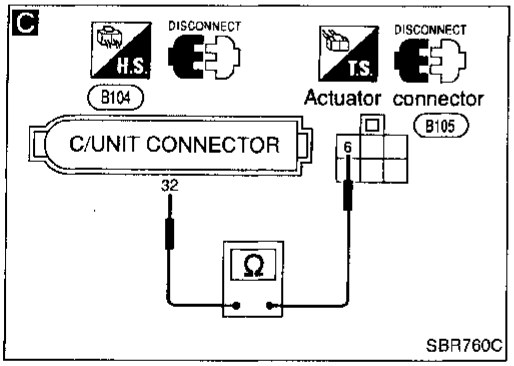

Diagnostic Procedure 6

SOLENOID VALVE RELAY

(Malfunction code No. 63)

SOLENOID VALVE POWER SUPPLY CHECK

- Check 20A fuse for actuator. For fuse layout, refer to wiring diagram (BR-21).

NG → Ⓐ (See next page.)

OK ↓

A

SOLENOID VALVE POWER SUPPLY CHECK

- Disconnect connectors from actuator.
- Check voltage between actuator 2-pin connector (body side) terminal ⑨ and ground.
  Battery voltage should exist.

NG → Repair harness and connector.

OK ↓

SOLENOID VALVE RELAY CHECK

Refer to SOLENOID VALVE RELAY in Electrical Components Inspection (BR-45).

NG → Replace solenoid valve relay.

OK ↓

B

SOLENOID VALVE RELAY CIRCUIT CHECK

Check continuity between relay terminals and actuator connector (actuator side) terminals.

Relay terminals	Connector terminals
㉚	⑥
㊼	⑨
㊼a	㉑

Continuity should exist.

NG → • Replace actuator.

OK ↓

C

CIRCUIT CHECK

- Disconnect control unit connector.
- Check continuity between control unit connector terminal ㉜ and actuator connector (body side) terminal ⑥.
  Continuity should exist.

NG → Repair harness and connectors.

OK ↓

Replace control unit.

Diagnostic Procedure 6 (Cont'd)

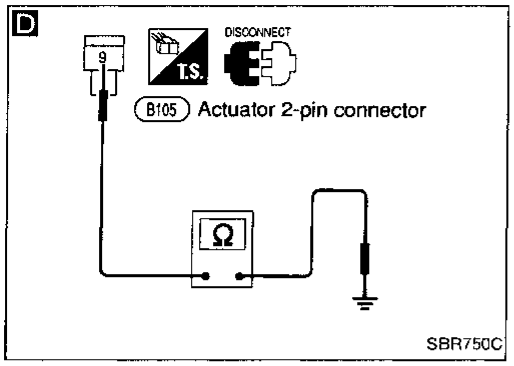

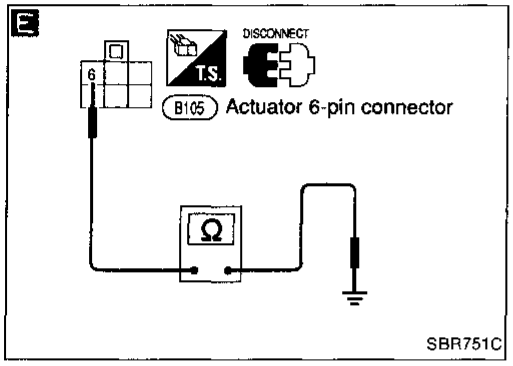

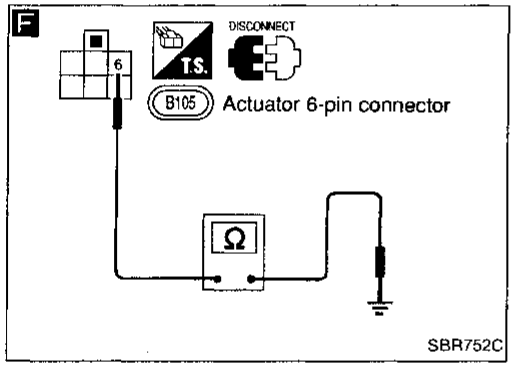

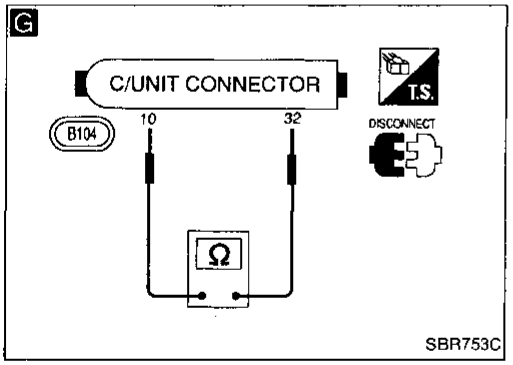

Ⓐ

- Replace 20A fuse.
  Is the fuse blown out when ignition switch is turned "ON"?

No → Inspection end

Yes ↓

D

ACTUATOR POWER SUPPLY CIRCUIT

- Disconnect actuator 2-pin connector.
- Check continuity between actuator 2-pin connector (body side) terminal ⑨ and ground.
  Continuity should not exist.

NG → Repair harness and connector.

OK ↓

E

- Disconnect actuator 6-pin connector and control unit connector.
- Check continuity between actuator 6-pin connector (body side) terminal ⑥ and ground.
  Continuity should not exist.

NG → Repair harness and connector.

OK ↓

F

- Check continuity between actuator 6-pin connector (actuator side) terminal ⑥ and ground.
  Continuity should not exist.

NG → Replace actuator assembly.

OK ↓

G

- Check continuity between control unit terminals ㉜ and ⑩.
  Continuity should not exist.

NG → Replace control unit.

OK ↓

Replace actuator assembly.

Diagnostic Procedure 7

POWER SUPPLY (Low voltage)

(Malfunction code No. 57)

BATTERY CHECK
Check battery. Refer to "BATTERY" in EL section.

Diagnostic Procedure 8

STOP LAMP SWITCH CIRCUIT

(Malfunction code No. 16)

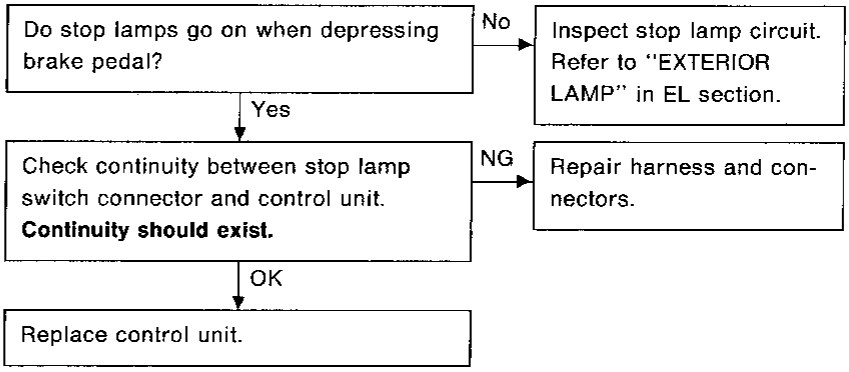

Diagnostic Procedure 9

CONTROL UNIT

(Malfunction code No. 71)

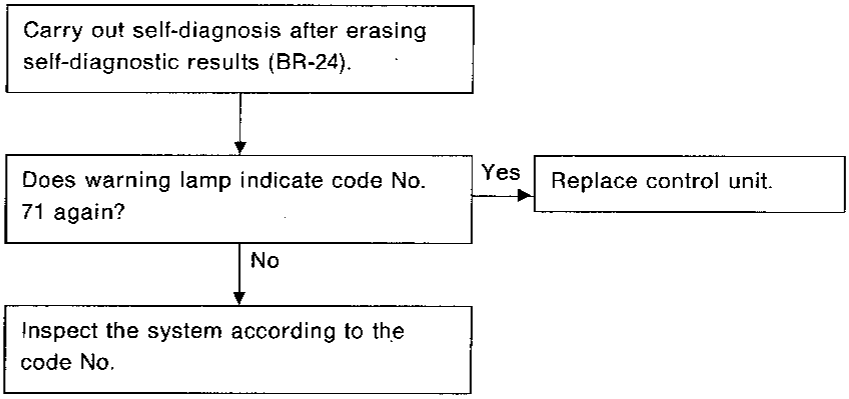

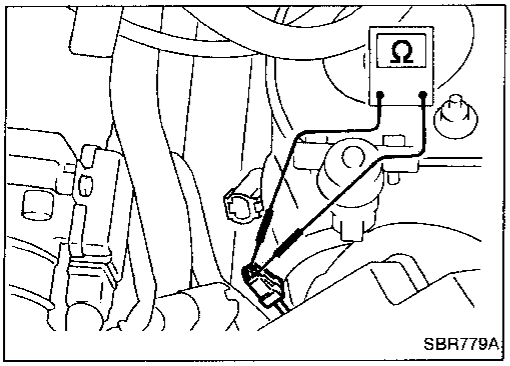

Electrical Components Inspection

WHEEL SENSOR

Check resistance for each sensor.

Resistance: 0.8 - 1.2 kΩ

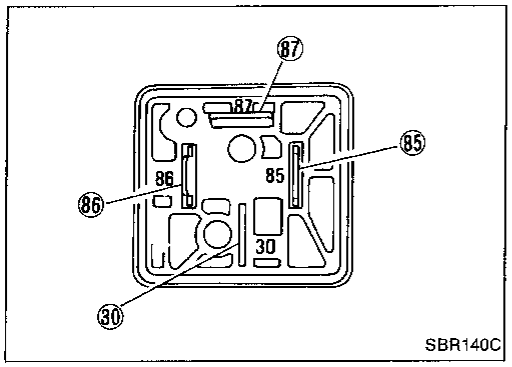

ACTUATOR MOTOR RELAY

Condition	Continuity existence between terminals 30 and 87
Battery voltage not applied between terminals 85 and 86.	No
Battery voltage applied between terminals 85 and 86.	Yes

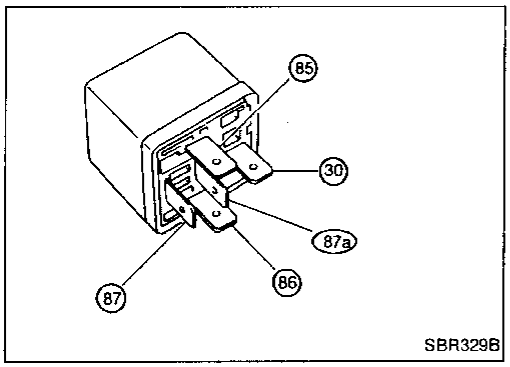

SOLENOID VALVE RELAY

Condition	Continuity existence between terminals 30 and 87a	Continuity existence between terminals 30 and 87
Battery voltage not applied between terminals 85 and 86.	Yes	No
Battery voltage applied between terminals 85 and 86.	No	Yes

General Specifications

Front brake	
Brake model	OPF25VA
Cylinder bore diameter mm (in)	40.45 (1.5925) x 2
Pad length x width x thickness mm (in)	116 x 50 x 10 (4.57 x 1.97 x 0.39)
Rotor outer diameter x thickness mm (in)	280 x 30 (11.02 x 1.18)
Rear brake	
Brake model	OPZ11V
Cylinder bore diameter mm (in)	38.1 (1.500)
Pad length x width x thickness mm (in)	71.8 x 36.5 x 11.5 (2.827 x 1.437 x 0.453)
Rotor outer diameter x thickness mm (in)	297 x 18 (11.69 x 0.71)
Master cylinder	
Cylinder bore diameter mm (in)	25.40 (1)

Control valve	
Valve model	Proportioning valve (within master cylinder)
Split point x reducing ratio kPa (kg/cm^2, psi)	2,452 (25, 356) x 0.4
Brake booster	
Booster model	M215T
Diaphragm diameter mm (in)	Primary: 230 (9.06) Secondary: 205 (8.07)
Brake fluid	
Recommended brake fluid	DOT 3
Parking drum brake	
Brake model	DS17HD
Lining Length x width x thickness mm (in)	154.1 x 25.0 x 3.0 (6.07 x 0.984 x 0.118)
Drum inner diameter mm (in)	172.0 (6.77)

Inspection and Adjustment

DISC BRAKE

Unit: mm (in)

	Front	Rear
Pad wear limit		
Minimum thickness	2.0 (0.079)	
Rotor repair limit		
Minimum thickness	28.0 (1.102)	16.0 (0.630)

PARKING DRUM BRAKE

Unit: mm (in)

Lining replacement limit	
Minimum thickness	1.5 (0.059)
Drum repair limit	
Maximum inner diameter	173.0 (6.81)

BRAKE PEDAL

Unit: mm (in)

Applied model	M/T	A/T
Free height	186 - 196 (7.32 - 7.72)	195 - 205 (7.68 - 8.07)
Depressed height [under force of 490 N (50 kg, 110 lb) with engine running]	100 (3.94)	105 (4.13)
Clearance between pedal stopper and threaded end of switches	0.3 - 1.0 (0.012 - 0.039)	
Pedal free play clevis	1 - 3 (0.04 - 0.12)	

PARKING BRAKE

Number of notches [under force of 196 N (20 kg, 44 lb)]	6 - 7
Number of notches (when warning switch comes on)	1