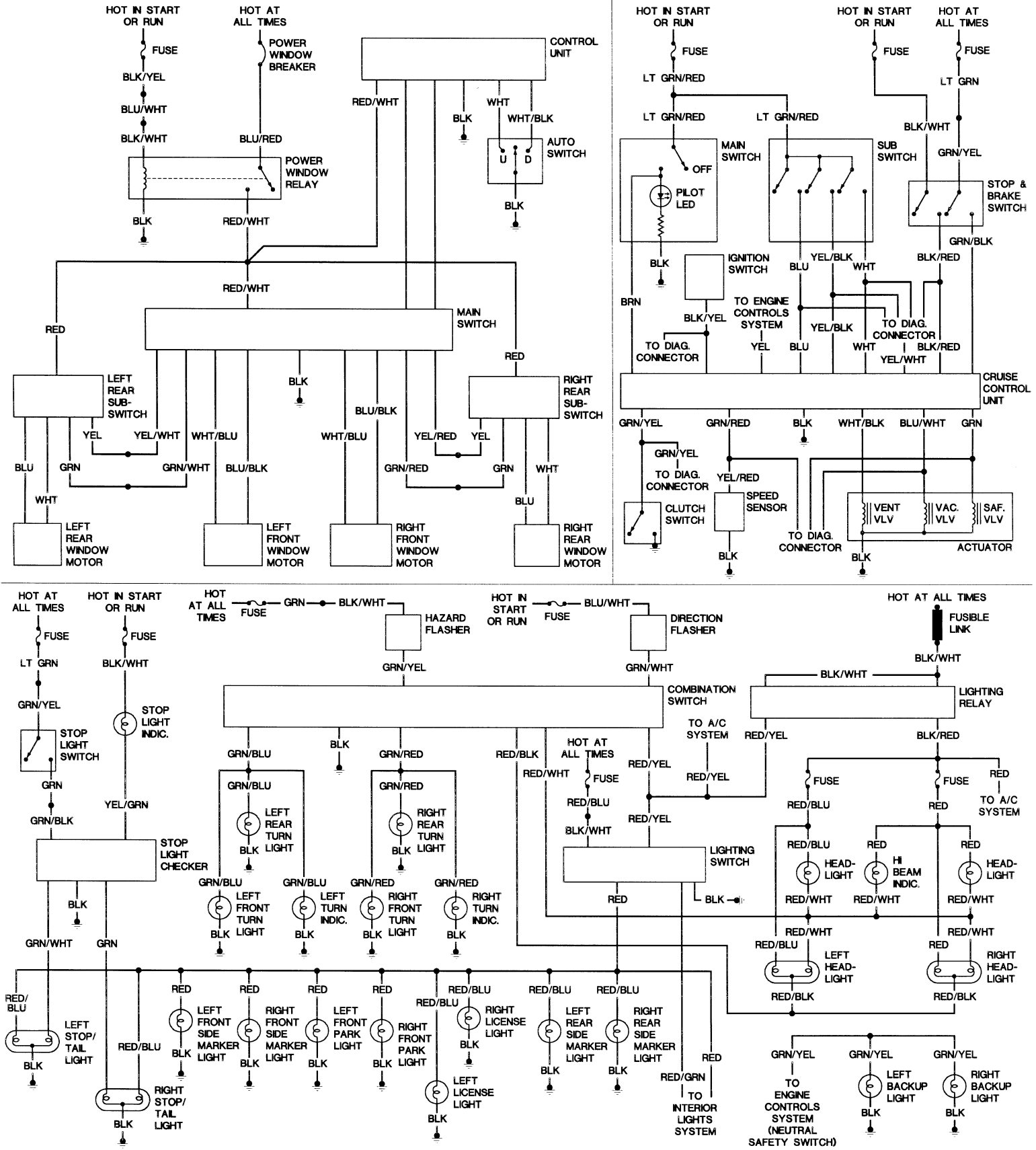
HOT IN START OR RUN
HOT AT ALL TIMES
FUSE
POWER WINDOW BREAKER
CONTROL UNIT
BLK/YEL
BLU/WHT
BLK/WHT
BLU/RED
RED/WHT
WHT
BLK
WHT/BLK
AUTO SWITCH
U
D
POWER WINDOW RELAY
BLK
RED/WHT
RED/WHT
MAIN SWITCH
RED
RED
LEFT REAR SUB-SWITCH
RIGHT REAR SUB-SWITCH
BLK
YEL
YEL/WHT
WHT/BLU
WHT/BLU
BLU/BLK
YEL/RED
YEL
BLU
GRN
GRN/WHT
BLU/BLK
GRN/RED
GRN
WHT
WHT
BLU
LEFT REAR WINDOW MOTOR
LEFT FRONT WINDOW MOTOR
RIGHT FRONT WINDOW MOTOR
RIGHT REAR WINDOW MOTOR
HOT IN START OR RUN
HOT IN START OR RUN
HOT AT ALL TIMES
FUSE
FUSE
FUSE
LT GRN/RED
LT GRN
LT GRN/RED
LT GRN/RED
BLK/WHT
MAIN SWITCH
SUB SWITCH
GRN/YEL
OFF
PILOT LED
STOP & BRAKE SWITCH
GRN/BLK
BLK
IGNITION SWITCH
BLU
YEL/BLK
WHT
BLK/RED
BRN
TO ENGINE CONTROLS SYSTEM
BLK/YEL
YEL/BLK
TO DIAG. CONNECTOR
TO DIAG. CONNECTOR
YEL
BLU
WHT
BLK/RED
YEL/WHT
CRUISE CONTROL UNIT
GRN/YEL
GRN/RED
BLK
WHT/BLK
BLU/WHT
GRN
GRN/YEL
TO DIAG. CONNECTOR
YEL/RED
CLUTCH SWITCH
SPEED SENSOR
VENT VLV
VAC. VLV
SAF. VLV
TO DIAG. CONNECTOR
BLK
BLK
ACTUATOR
HOT AT ALL TIMES
HOT IN START OR RUN
HOT AT ALL TIMES
FUSE
GRN
BLK/WHT
HAZARD FLASHER
HOT IN START OR RUN
FUSE
BLU/WHT
DIRECTION FLASHER
HOT AT ALL TIMES
FUSIBLE LINK
FUSE
FUSE
BLK/WHT
LT GRN
BLK/WHT
GRN/YEL
GRN/WHT
BLK/WHT
GRN/YEL
COMBINATION SWITCH
LIGHTING RELAY
STOP LIGHT INDIC.
STOP LIGHT SWITCH
TO A/C SYSTEM
RED/YEL
BLK/RED
BLK
GRN/BLU
GRN/RED
RED/BLK
HOT AT ALL TIMES
RED/YEL
RED/WHT
FUSE
RED/YEL
FUSE
FUSE
RED
GRN
GRN/BLU
GRN/RED
RED/BLU
RED/YEL
RED/BLU
RED
TO A/C SYSTEM
YEL/GRN
GRN/BLK
LEFT REAR TURN LIGHT
RIGHT REAR TURN LIGHT
BLK/WHT
STOP LIGHT CHECKER
LIGHTING SWITCH
RED/BLU
RED
RED
HEAD-LIGHT
HI BEAM INDIC.
HEAD-LIGHT
BLK
BLK
GRN/BLU
GRN/BLU
GRN/RED
GRN/RED
RED
RED/WHT
RED/WHT
RED/WHT
LEFT FRONT TURN LIGHT
LEFT TURN INDIC.
RIGHT FRONT TURN LIGHT
RIGHT TURN INDIC.
BLK
BLK
BLK
BLK
RED/WHT
RED/WHT
GRN/WHT
GRN
RED/BLU
RED
LEFT HEAD-LIGHT
RED
RIGHT HEAD-LIGHT
RED/BLK
RED/BLK
RED/BLU
RED
RED
RED
RED
RED/BLU
RED/BLU
RED/BLU
LEFT FRONT SIDE MARKER LIGHT
RIGHT FRONT SIDE MARKER LIGHT
LEFT FRONT PARK LIGHT
RIGHT FRONT PARK LIGHT
RIGHT LICENSE LIGHT
LEFT REAR SIDE MARKER LIGHT
RIGHT REAR SIDE MARKER LIGHT
LEFT STOP/ TAIL LIGHT
BLK
BLK
BLK
BLK
BLK
BLK
BLK
BLK
RED/BLU
RIGHT STOP/ TAIL LIGHT
BLK
LEFT LICENSE LIGHT
BLK
RED/GRN
TO INTERIOR LIGHTS SYSTEM
RED
GRN/YEL
GRN/YEL
GRN/YEL
TO ENGINE CONTROLS SYSTEM (NEUTRAL SAFETY SWITCH)
LEFT BACKUP LIGHT
RIGHT BACKUP LIGHT
BLK
BLK