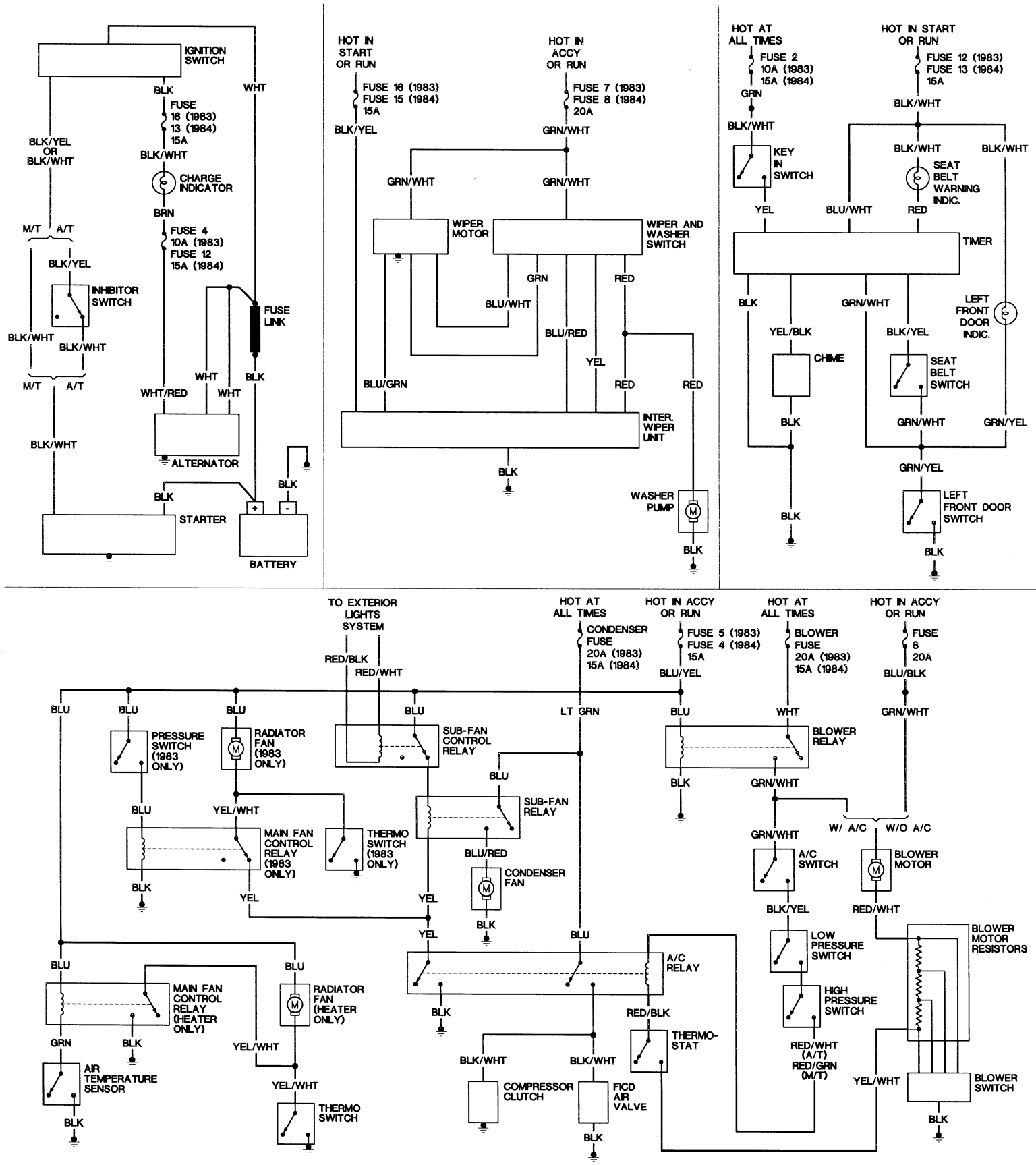
IGNITION SWITCH
BLK
WHT
FUSE 16 (1983) 13 (1984) 15A
BLK/WHT
BLK/YEL OR BLK/WHT
CHARGE INDICATOR
BRN
FUSE 4 10A (1983) FUSE 12 15A (1984)
M/T A/T
BLK/YEL
INHIBITOR SWITCH
BLK/WHT
BLK/WHT
FUSE LINK
WHT
BLK
M/T A/T
WHT/RED
WHT
BLK/WHT
ALTERNATOR
BLK
BLK
STARTER
BATTERY
HOT IN START OR RUN
FUSE 16 (1983) FUSE 15 (1984) 15A
BLK/YEL
HOT IN ACCY OR RUN
FUSE 7 (1983) FUSE 8 (1984) 20A
GRN/WHT
GRN/WHT
GRN/WHT
WIPER MOTOR
WIPER AND WASHER SWITCH
GRN
RED
BLU/WHT
BLU/RED
YEL
BLU/GRN
RED
RED
INTER. WIPER UNIT
BLK
WASHER PUMP
BLK
HOT AT ALL TIMES
FUSE 2 10A (1983) 15A (1984)
GRN
BLK/WHT
KEY IN SWITCH
YEL
HOT IN START OR RUN
FUSE 12 (1983) FUSE 13 (1984) 15A
BLK/WHT
BLK/WHT
BLK/WHT
SEAT BELT WARNING INDIC.
BLU/WHT
RED
TIMER
BLK
GRN/WHT
LEFT FRONT DOOR INDIC.
YEL/BLK
BLK/YEL
CHIME
SEAT BELT SWITCH
BLK
GRN/WHT
GRN/YEL
GRN/YEL
LEFT FRONT DOOR SWITCH
BLK
BLK
TO EXTERIOR LIGHTS SYSTEM
RED/BLK
RED/WHT
HOT AT ALL TIMES
CONDENSER FUSE 20A (1983) 15A (1984)
HOT IN ACCY OR RUN
FUSE 5 (1983) FUSE 4 (1984) 15A
BLU/YEL
HOT AT ALL TIMES
BLOWER FUSE 20A (1983) 15A (1984)
HOT IN ACCY OR RUN
FUSE 8 20A
BLU/BLK
BLU
BLU
BLU
BLU
LT GRN
BLU
WHT
GRN/WHT
PRESSURE SWITCH (1983 ONLY)
RADIATOR FAN (1983 ONLY)
SUB-FAN CONTROL RELAY
BLOWER RELAY
BLK
GRN/WHT
BLU
SUB-FAN RELAY
BLU
YEL/WHT
MAIN FAN CONTROL RELAY (1983 ONLY)
THERMO SWITCH (1983 ONLY)
BLU/RED
CONDENSER FAN
BLK
YEL
YEL
BLK
W/ A/C
W/O A/C
GRN/WHT
A/C SWITCH
BLOWER MOTOR
BLK/YEL
RED/WHT
LOW PRESSURE SWITCH
BLOWER MOTOR RESISTORS
YEL
BLU
A/C RELAY
BLK
HIGH PRESSURE SWITCH
BLU
BLU
MAIN FAN CONTROL RELAY (HEATER ONLY)
RADIATOR FAN (HEATER ONLY)
RED/BLK
THERMO-STAT
GRN
BLK
YEL/WHT
BLK/WHT
BLK/WHT
RED/WHT (A/T) RED/GRN (M/T)
YEL/WHT
BLOWER SWITCH
AIR TEMPERATURE SENSOR
YEL/WHT
COMPRESSOR CLUTCH
FICD AIR VALVE
THERMO SWITCH
BLK
BLK
BLK