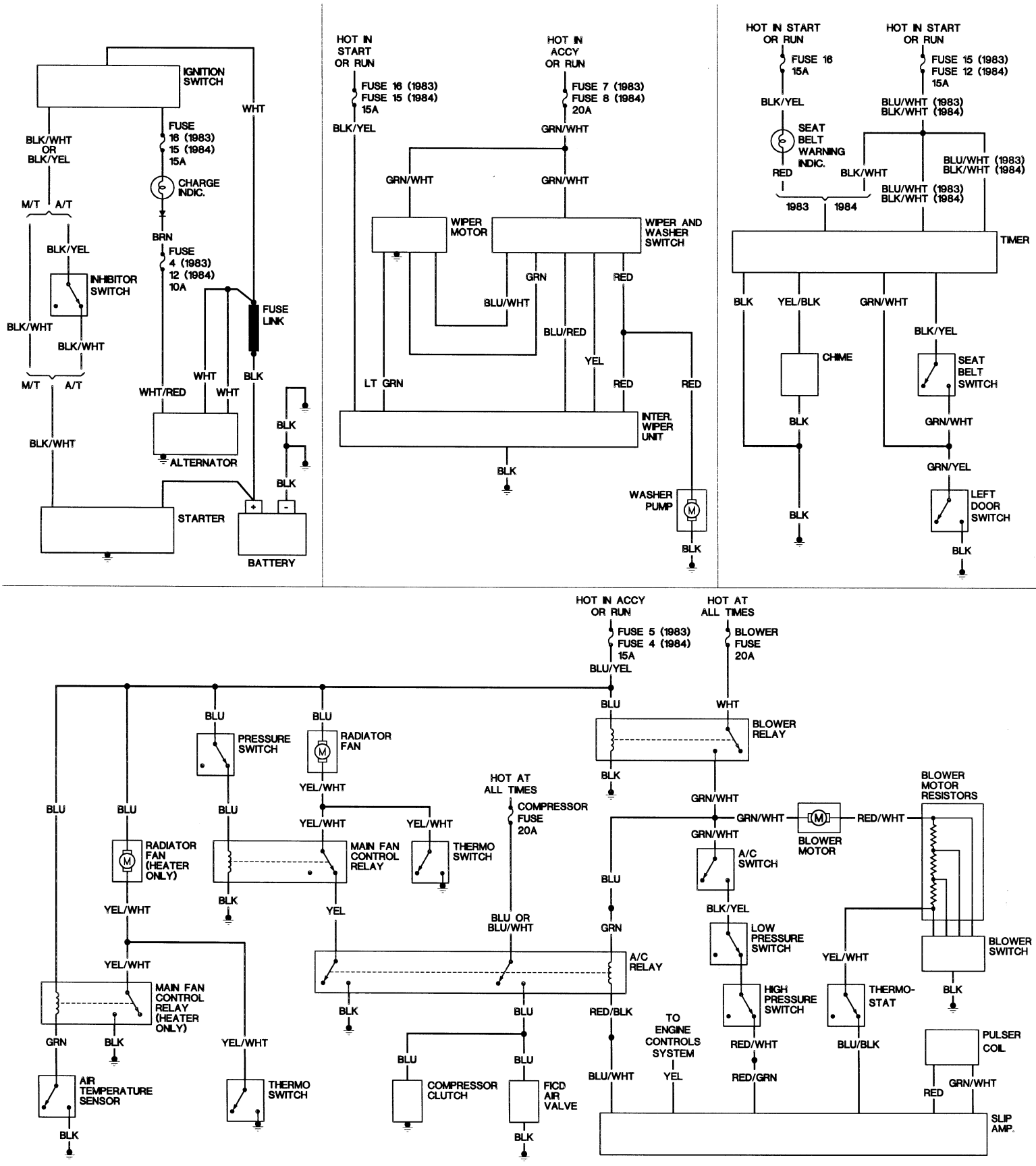
IGNITION SWITCH
WHT
BLK/WHT OR BLK/YEL
FUSE 16 (1983) 15 (1984) 15A
CHARGE INDIC.
M/T
A/T
BRN
BLK/YEL
FUSE 4 (1983) 12 (1984) 10A
INHIBITOR SWITCH
FUSE LINK
BLK/WHT
BLK/WHT
WHT
BLK
M/T
A/T
WHT/RED
WHT
BLK
ALTERNATOR
BLK/WHT
BLK
STARTER
BATTERY
HOT IN START OR RUN
FUSE 16 (1983) FUSE 15 (1984) 15A
BLK/YEL
HOT IN ACCY OR RUN
FUSE 7 (1983) FUSE 8 (1984) 20A
GRN/WHT
GRN/WHT
GRN/WHT
WIPER MOTOR
WIPER AND WASHER SWITCH
GRN
RED
BLU/WHT
BLU/RED
YEL
LT GRN
RED
RED
INTER. WIPER UNIT
BLK
WASHER PUMP
BLK
HOT IN START OR RUN
FUSE 16 15A
BLK/YEL
SEAT BELT WARNING INDIC.
RED
BLK/WHT
1983
1984
HOT IN START OR RUN
FUSE 15 (1983) FUSE 12 (1984) 15A
BLU/WHT (1983) BLK/WHT (1984)
BLU/WHT (1983) BLK/WHT (1984)
BLU/WHT (1983) BLK/WHT (1984)
TIMER
BLK
YEL/BLK
GRN/WHT
BLK/YEL
CHIME
SEAT BELT SWITCH
BLK
GRN/WHT
GRN/YEL
BLK
LEFT DOOR SWITCH
BLK
HOT IN ACCY OR RUN
FUSE 5 (1983) FUSE 4 (1984) 15A
BLU/YEL
HOT AT ALL TIMES
BLOWER FUSE 20A
BLU
WHT
BLOWER RELAY
BLK
BLU
BLU
PRESSURE SWITCH
RADIATOR FAN
YEL/WHT
HOT AT ALL TIMES
COMPRESSOR FUSE 20A
GRN/WHT
GRN/WHT
RED/WHT
BLOWER MOTOR
BLOWER MOTOR RESISTORS
BLU
BLU
BLU
YEL/WHT
YEL/WHT
RADIATOR FAN (HEATER ONLY)
MAIN FAN CONTROL RELAY
THERMO SWITCH
GRN/WHT
A/C SWITCH
BLK
YEL
BLU
YEL/WHT
BLU OR BLU/WHT
GRN
BLK/YEL
LOW PRESSURE SWITCH
A/C RELAY
BLOWER SWITCH
YEL/WHT
YEL/WHT
MAIN FAN CONTROL RELAY (HEATER ONLY)
BLK
BLU
RED/BLK
HIGH PRESSURE SWITCH
THERMO-STAT
BLK
GRN
BLK
YEL/WHT
TO ENGINE CONTROLS SYSTEM
RED/WHT
BLU/BLK
PULSER COIL
BLU
BLU
BLU/WHT
YEL
RED/GRN
GRN/WHT
RED
AIR TEMPERATURE SENSOR
THERMO SWITCH
COMPRESSOR CLUTCH
FICD AIR VALVE
SLIP AMP.
BLK
BLK