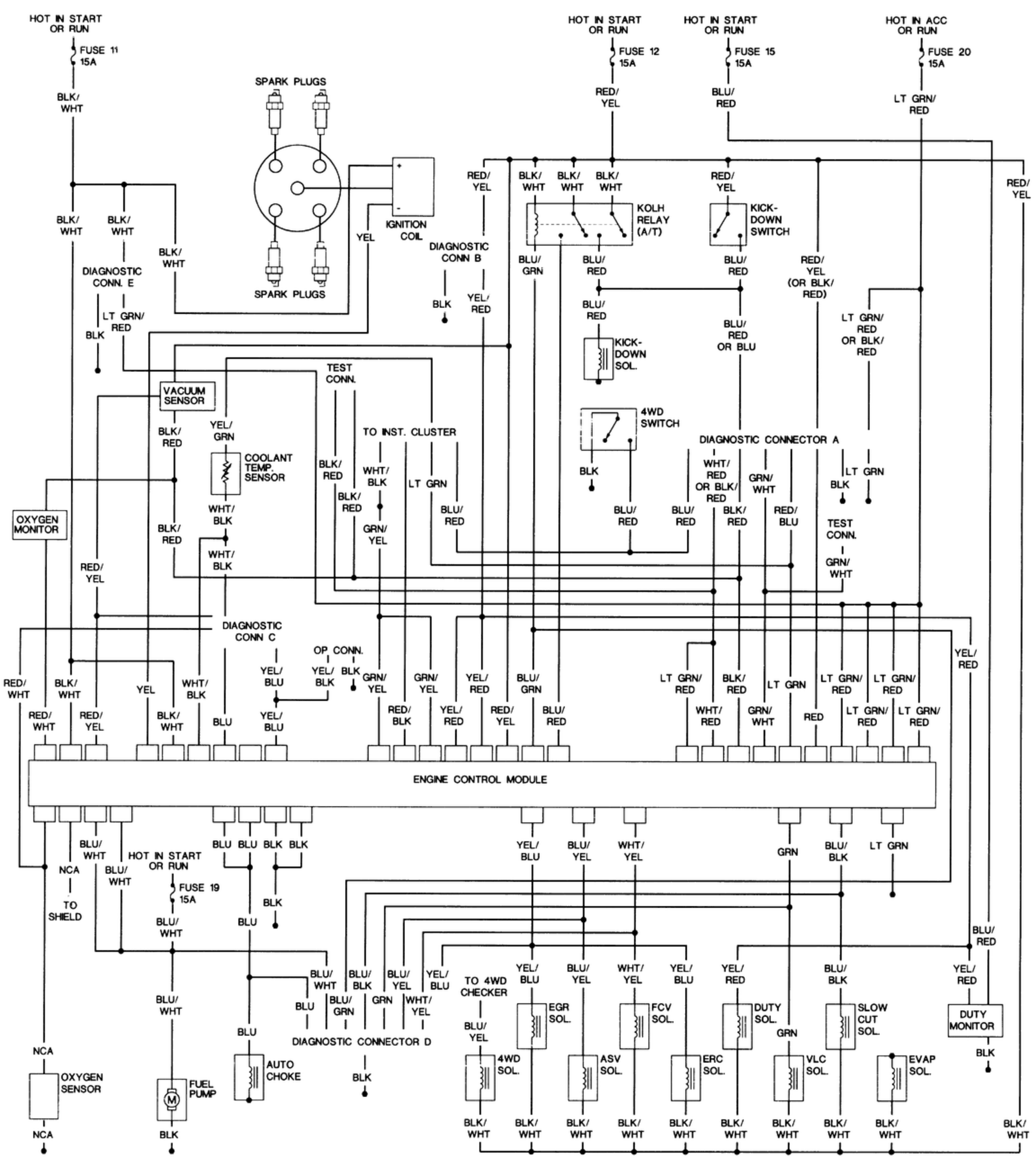
HOT IN START OR RUN
FUSE 11 15A
BLK/ WHT
SPARK PLUGS
SPARK PLUGS
IGNITION COIL
YEL
BLK/ WHT
BLK/ WHT
BLK/ WHT
DIAGNOSTIC CONN. E
LT GRN/ RED
BLK
VACUUM SENSOR
BLK/ RED
YEL/ GRN
COOLANT TEMP. SENSOR
WHT/ BLK
OXYGEN MONITOR
BLK/ RED
WHT/ BLK
RED/ YEL
TEST CONN.
TO INST. CLUSTER
BLK/ RED
BLK/ RED
WHT/ BLK
GRN/ YEL
LT GRN
BLU/ RED
DIAGNOSTIC CONN B
BLK
YEL/ RED
HOT IN START OR RUN
FUSE 12 15A
RED/ YEL
RED/ YEL
BLK/ WHT
BLK/ WHT
BLK/ WHT
KOLH RELAY (A/T)
BLU/ GRN
BLU/ RED
BLU/ RED
KICK-DOWN SOL.
4WD SWITCH
BLK
BLU/ RED
HOT IN START OR RUN
FUSE 15 15A
BLU/ RED
RED/ YEL
KICK-DOWN SWITCH
BLU/ RED
BLU/ RED OR BLU
HOT IN ACC OR RUN
FUSE 20 15A
LT GRN/ RED
RED/ YEL
RED/ YEL (OR BLK/ RED)
LT GRN/ RED OR BLK/ RED
DIAGNOSTIC CONNECTOR A
WHT/ RED OR BLK/ RED
BLU/ RED
BLK/ RED
GRN/ WHT
RED/ BLU
BLK
LT GRN
TEST CONN.
GRN/ WHT
DIAGNOSTIC CONN C
OP. CONN.
YEL/ BLU
YEL/ BLK
BLK
GRN/ YEL
GRN/ YEL
YEL/ RED
BLU/ GRN
RED/ WHT
BLK/ WHT
YEL
WHT/ BLK
RED/ WHT
RED/ YEL
BLK/ WHT
BLU
YEL/ BLU
RED/ BLK
YEL/ RED
RED/ YEL
BLU/ RED
LT GRN/ RED
BLK/ RED
LT GRN
LT GRN/ RED
LT GRN/ RED
WHT/ RED
GRN/ WHT
RED
LT GRN/ RED
LT GRN/ RED
YEL/ RED
ENGINE CONTROL MODULE
BLU/ WHT
NCA
TO SHIELD
BLU/ WHT
HOT IN START OR RUN
FUSE 19 15A
BLU/ WHT
BLU BLU BLK BLK
BLU
BLK
YEL/ BLU
BLU/ YEL
WHT/ YEL
GRN
BLU/ BLK
LT GRN
BLU/ RED
BLU/ WHT
BLU
BLU/ WHT
BLU/ BLK
BLU/ YEL
YEL/ BLU
BLU
BLU/ GRN
GRN
WHT/ YEL
TO 4WD CHECKER
BLU/ YEL
DIAGNOSTIC CONNECTOR D
BLK
YEL/ BLU
BLU/ YEL
WHT/ YEL
YEL/ BLU
YEL/ RED
BLU/ BLK
YEL/ RED
EGR SOL.
FCV SOL.
DUTY SOL.
SLOW CUT SOL.
DUTY MONITOR
BLK
GRN
NCA
OXYGEN SENSOR
NCA
FUEL PUMP
BLK
AUTO CHOKE
4WD SOL.
ASV SOL.
ERC SOL.
VLC SOL.
EVAP SOL.
BLK/ WHT
BLK/ WHT
BLK/ WHT
BLK/ WHT
BLK/ WHT
BLK/ WHT
BLK/ WHT
BLK/ WHT
BLK/ WHT
BLK/ WHT