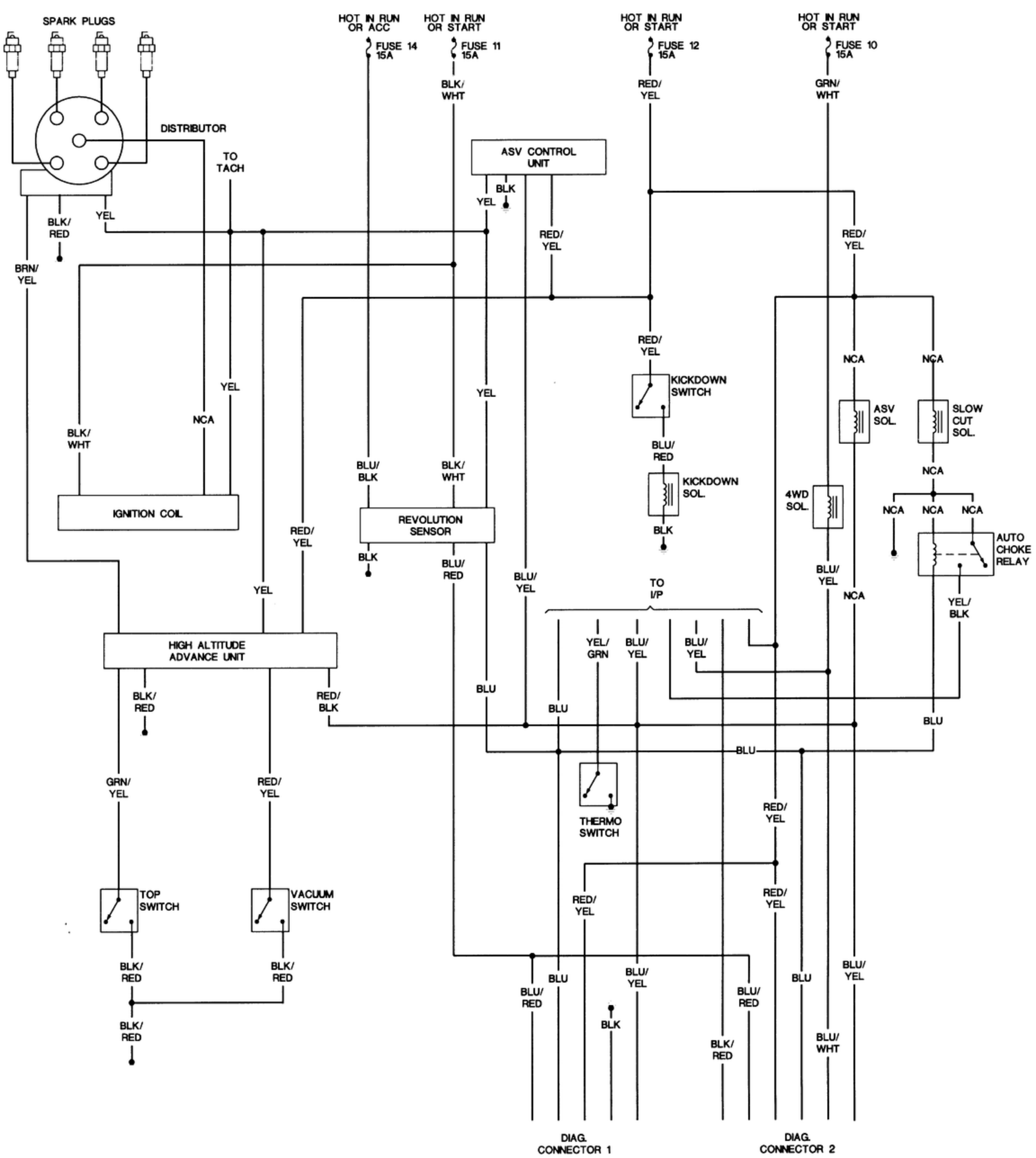
SPARK PLUGS
DISTRIBUTOR
TO TACH
HOT IN RUN OR ACC
FUSE 14 15A
HOT IN RUN OR START
FUSE 11 15A
HOT IN RUN OR START
FUSE 12 15A
HOT IN RUN OR START
FUSE 10 15A
BLK/ WHT
RED/ YEL
GRN/ WHT
ASV CONTROL UNIT
BLK
YEL
RED/ YEL
BLK/ RED
YEL
BRN/ YEL
RED/ YEL
RED/ YEL
RED/ YEL
NCA
NCA
KICKDOWN SWITCH
ASV SOL.
SLOW CUT SOL.
YEL
NCA
BLK/ WHT
BLU/ RED
KICKDOWN SOL.
NCA
BLU/ BLK
BLK/ WHT
4WD SOL.
NCA
NCA
NCA
IGNITION COIL
REVOLUTION SENSOR
RED/ YEL
BLK
BLU/ RED
BLU/ YEL
AUTO CHOKE RELAY
BLU/ YEL
YEL
TO I/P
NCA
YEL/ BLK
HIGH ALTITUDE ADVANCE UNIT
YEL/ GRN
BLU/ YEL
BLU/ YEL
BLU
BLK/ RED
RED/ BLK
BLU
BLU
BLU
BLU
GRN/ YEL
RED/ YEL
THERMO SWITCH
RED/ YEL
TOP SWITCH
VACUUM SWITCH
RED/ YEL
RED/ YEL
BLK/ RED
BLK/ RED
BLU
BLU/ YEL
BLU/ RED
BLU
BLU/ YEL
BLU/ RED
BLK
BLK/ RED
BLU/ WHT
BLK/ RED
DIAG. CONNECTOR 1
DIAG. CONNECTOR 2