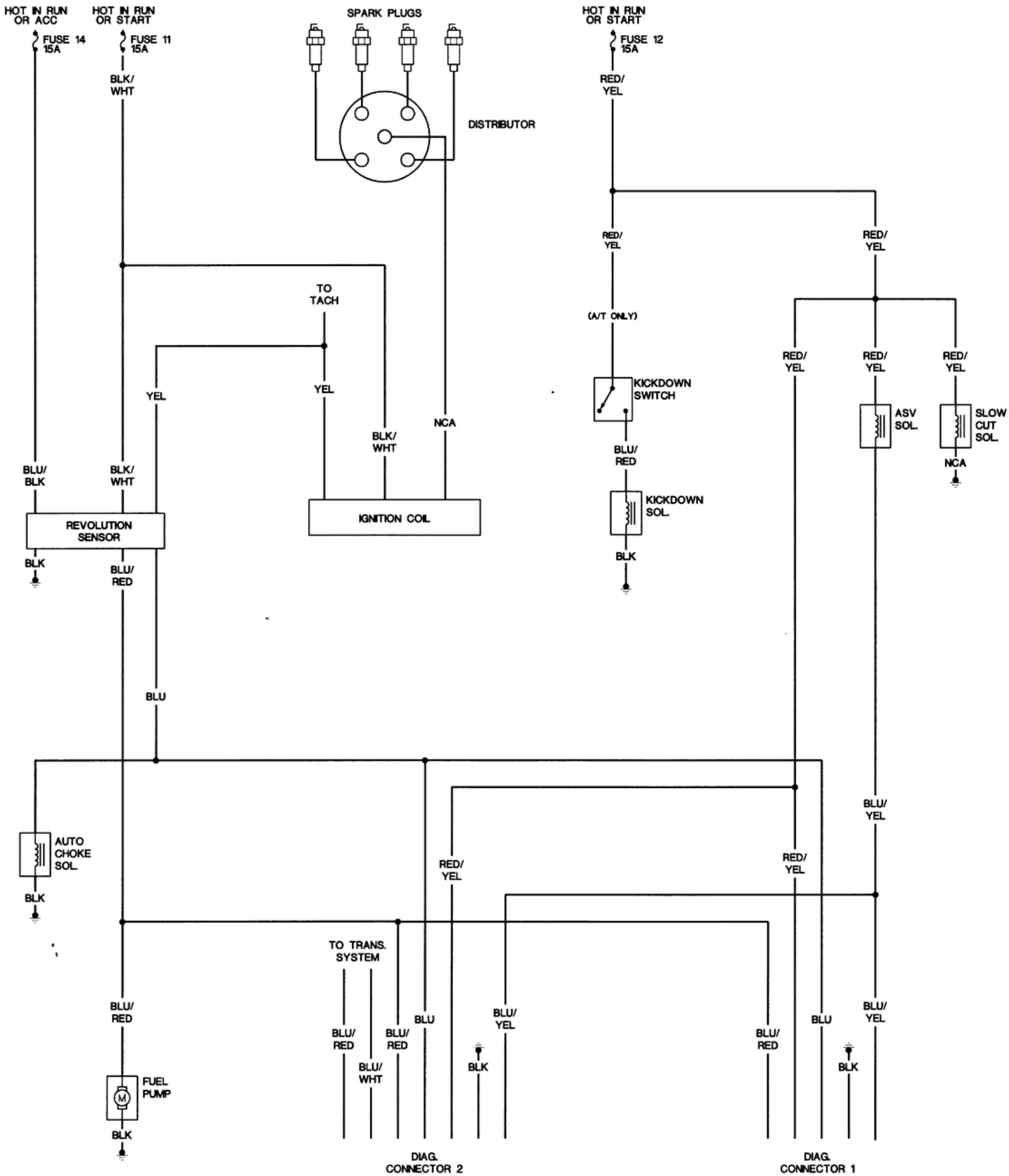
HOT IN RUN OR ACC
HOT IN RUN OR START
FUSE 14 15A
FUSE 11 15A
BLK/ WHT
SPARK PLUGS
DISTRIBUTOR
HOT IN RUN OR START
FUSE 12 15A
RED/ YEL
RED/ YEL
RED/ YEL
(A/T ONLY)
TO TACH
YEL
YEL
BLK/ WHT
NCA
KICKDOWN SWITCH
BLU/ RED
KICKDOWN SOL.
BLK
RED/ YEL
RED/ YEL
RED/ YEL
ASV SOL.
SLOW CUT SOL.
NCA
BLU/ BLK
BLK/ WHT
REVOLUTION SENSOR
BLK
BLU/ RED
IGNITION COIL
BLU
AUTO CHOKE SOL.
BLK
BLU/ YEL
RED/ YEL
RED/ YEL
TO TRANS. SYSTEM
BLU/ RED
BLU/ RED
BLU/ WHT
BLU
BLK
BLU/ YEL
BLU/ RED
BLU
BLK
BLU/ YEL
BLU/ RED
FUEL PUMP
BLK
DIAG. CONNECTOR 2
DIAG. CONNECTOR 1