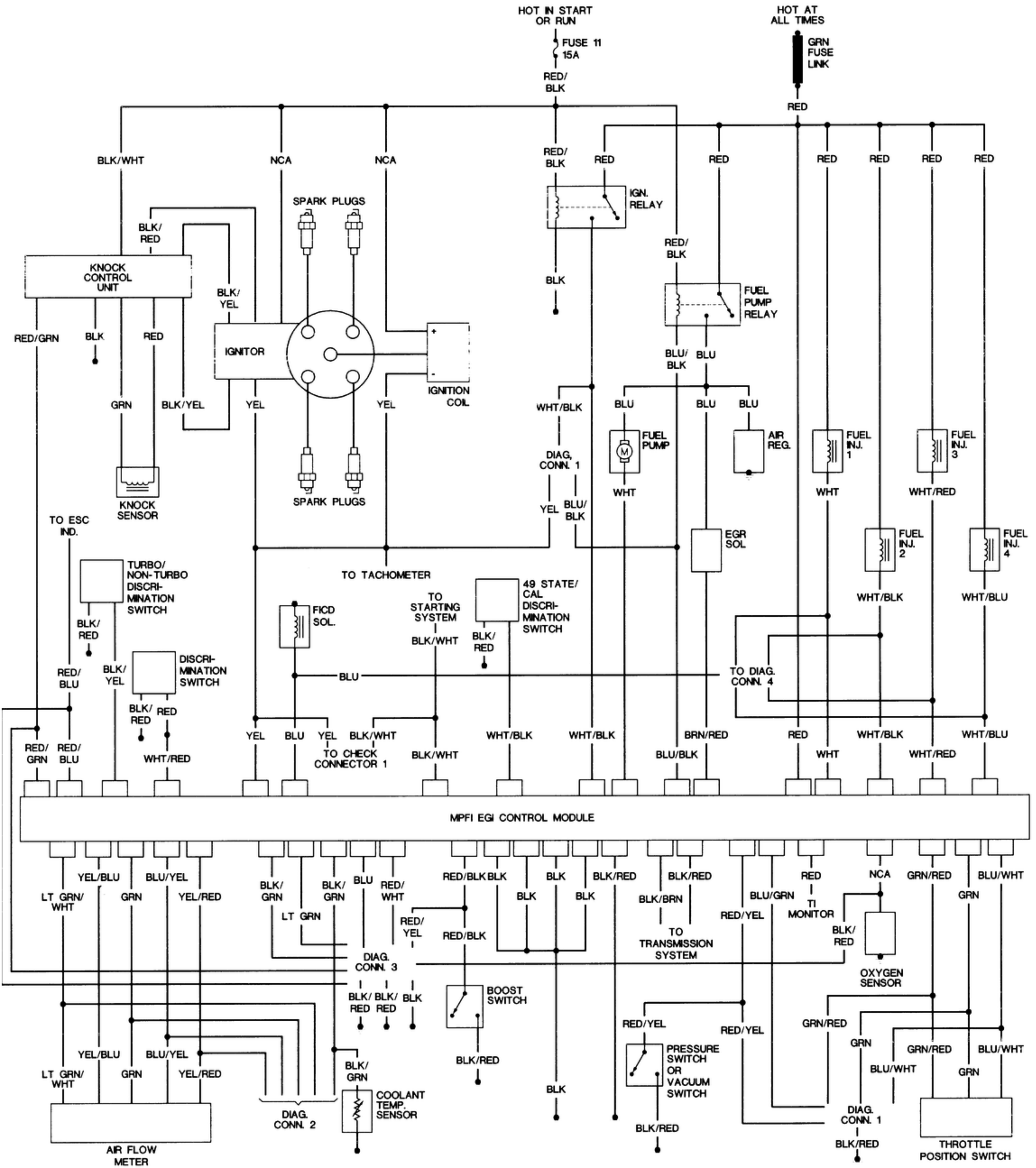
HOT IN START OR RUN
FUSE 11 15A
RED/BLK
HOT AT ALL TIMES
GRN FUSE LINK
RED
BLK/WHT
NCA
NCA
RED/BLK
RED
RED
RED
RED
RED
RED
IGN. RELAY
SPARK PLUGS
BLK/RED
KNOCK CONTROL UNIT
BLK/YEL
BLK
RED/BLK
FUEL PUMP RELAY
RED/GRN
BLK
RED
IGNITOR
IGNITION COIL
BLU/BLK
BLU
GRN
BLK/YEL
YEL
YEL
WHT/BLK
BLU
BLU
BLU
FUEL PUMP
AIR REG.
FUEL INJ. 1
FUEL INJ. 3
DIAG. CONN. 1
WHT
WHT
WHT/RED
KNOCK SENSOR
SPARK PLUGS
YEL
BLU/BLK
TO ESC IND.
EGR SOL
FUEL INJ. 2
FUEL INJ. 4
TURBO/NON-TURBO DISCRIMINATION SWITCH
TO TACHOMETER
49 STATE/CAL DISCRIMINATION SWITCH
FICD SOL.
TO STARTING SYSTEM
WHT/BLK
WHT/BLU
BLK/RED
BLK/WHT
BLK/RED
DISCRIMINATION SWITCH
BLU
TO DIAG. CONN. 4
RED/BLU
BLK/YEL
BLK/RED
RED
YEL
BLU
YEL
BLK/WHT
WHT/BLK
WHT/BLK
BRN/RED
RED
WHT/BLK
WHT/BLU
RED/GRN
RED/BLU
WHT/RED
TO CHECK CONNECTOR 1
BLK/WHT
BLU/BLK
WHT
WHT/RED
MPFI EGI CONTROL MODULE
YEL/BLU
BLU/YEL
BLK/GRN
BLU
RED/WHT
RED/BLK
BLK
BLK
BLK
BLK/RED
BLK/RED
RED
NCA
GRN/RED
BLU/WHT
LT GRN/WHT
GRN
YEL/RED
LT GRN
BLK/GRN
RED/YEL
RED/BLK
BLK
BLK/BRN
TO TRANSMISSION SYSTEM
RED/YEL
BLU/GRN
TI MONITOR
BLK/RED
GRN
DIAG. CONN. 3
OXYGEN SENSOR
BLK/RED
RED
BLK
BOOST SWITCH
RED/YEL
RED/YEL
GRN/RED
YEL/BLU
BLU/YEL
BLK/RED
PRESSURE SWITCH OR VACUUM SWITCH
GRN
GRN/RED
BLU/WHT
LT GRN/WHT
GRN
YEL/RED
BLK/GRN
BLU/WHT
GRN
BLK
COOLANT TEMP. SENSOR
DIAG. CONN. 2
DIAG. CONN. 1
BLK/RED
BLK/RED
AIR FLOW METER
THROTTLE POSITION SWITCH