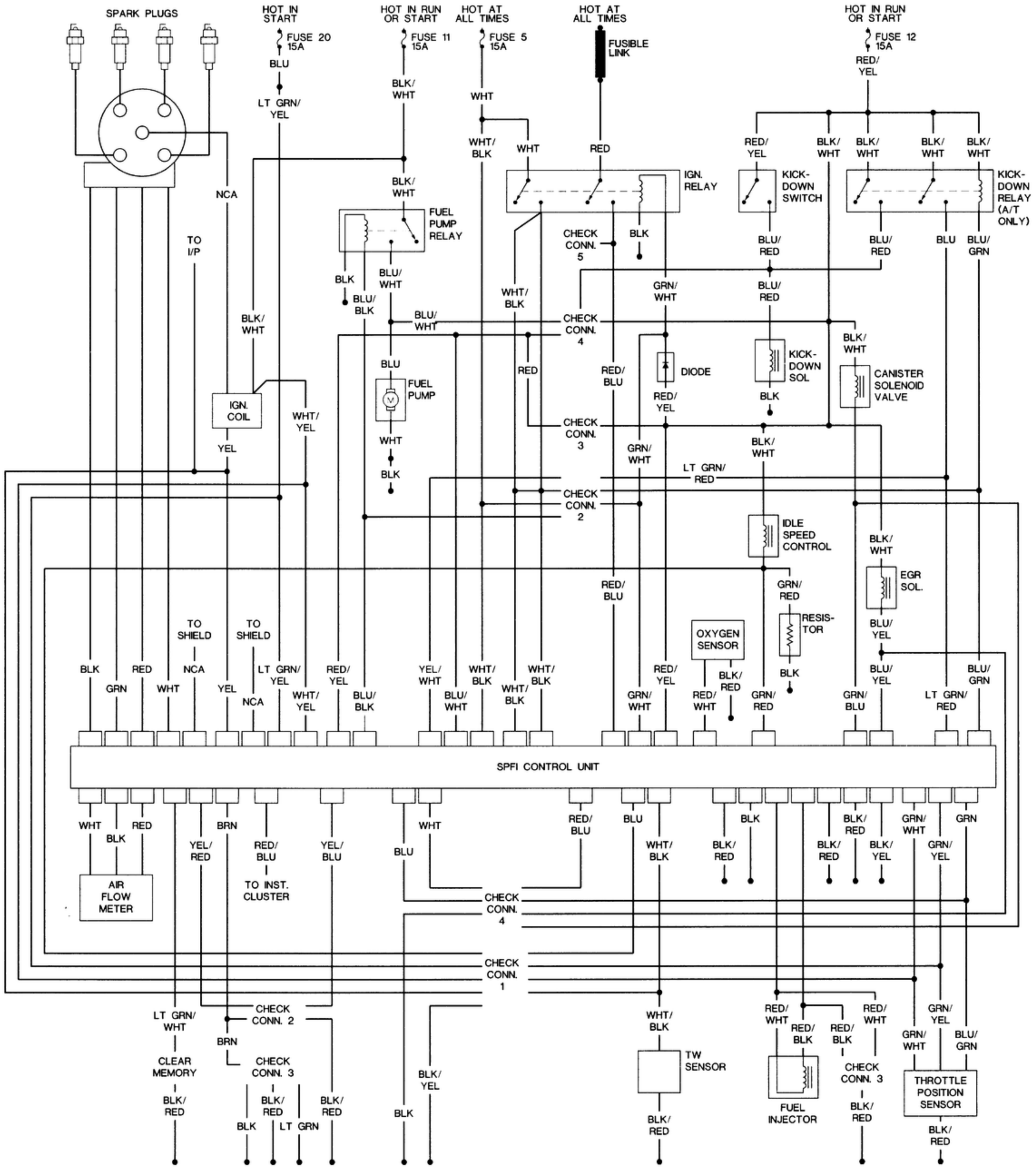
SPARK PLUGS
HOT IN START
FUSE 20 15A
BLU
LT GRN/ YEL
HOT IN RUN OR START
FUSE 11 15A
BLK/ WHT
HOT AT ALL TIMES
FUSE 5 15A
WHT
HOT AT ALL TIMES
FUSIBLE LINK
HOT IN RUN OR START
FUSE 12 15A
RED/ YEL
NCA
TO I/P
IGN. COIL
YEL
WHT/ YEL
BLK/ WHT
FUEL PUMP RELAY
BLK
BLU/ WHT
BLU/ BLK
BLU
FUEL PUMP
WHT
BLK
WHT/ BLK
WHT
RED
IGN. RELAY
CHECK CONN. 5
BLK
RED/ YEL
KICK-DOWN SWITCH
BLK/ WHT
BLK/ WHT
BLK/ WHT
BLK/ WHT
KICK-DOWN RELAY (A/T ONLY)
BLU/ RED
BLU/ RED
BLU
BLU/ GRN
GRN/ WHT
BLU/ RED
CHECK CONN. 4
RED
RED/ BLU
DIODE
RED/ YEL
KICK-DOWN SOL
BLK
BLK/ WHT
CANISTER SOLENOID VALVE
CHECK CONN. 3
GRN/ WHT
BLK/ WHT
LT GRN/ RED
CHECK CONN. 2
IDLE SPEED CONTROL
BLK/ WHT
EGR SOL.
RED/ BLU
GRN/ RED
RESIS-TOR
BLU/ YEL
OXYGEN SENSOR
BLK
TO SHIELD
TO SHIELD
BLK
GRN
RED
WHT
NCA
YEL
NCA
LT GRN/ YEL
WHT/ YEL
RED/ YEL
BLU/ BLK
YEL/ WHT
BLU/ WHT
WHT/ BLK
WHT/ BLK
WHT/ BLK
RED/ YEL
GRN/ WHT
RED/ WHT
BLK/ RED
GRN/ RED
GRN/ BLU
BLU/ YEL
LT GRN/ RED
BLU/ GRN
SPFI CONTROL UNIT
WHT
BLK
RED
AIR FLOW METER
YEL/ RED
BRN
RED/ BLU
TO INST. CLUSTER
YEL/ BLU
BLU
WHT
RED/ BLU
BLU
WHT/ BLK
BLK/ RED
BLK
BLK/ RED
BLK/ YEL
GRN/ WHT
GRN/ YEL
GRN
CHECK CONN. 4
CHECK CONN. 1
LT GRN/ WHT
CHECK CONN. 2
BRN
CLEAR MEMORY
BLK/ RED
CHECK CONN. 3
BLK/ RED
BLK
LT GRN
BLK/ RED
BLK
BLK/ YEL
WHT/ BLK
TW SENSOR
BLK/ RED
RED/ WHT
RED/ BLK
FUEL INJECTOR
RED/ BLK
RED/ WHT
CHECK CONN. 3
BLK/ RED
GRN/ YEL
GRN/ WHT
BLU/ GRN
THROTTLE POSITION SENSOR
BLK/ RED
AIR FLOW METER
TO INST. CLUSTER
TW SENSOR
FUEL INJECTOR
THROTTLE POSITION SENSOR