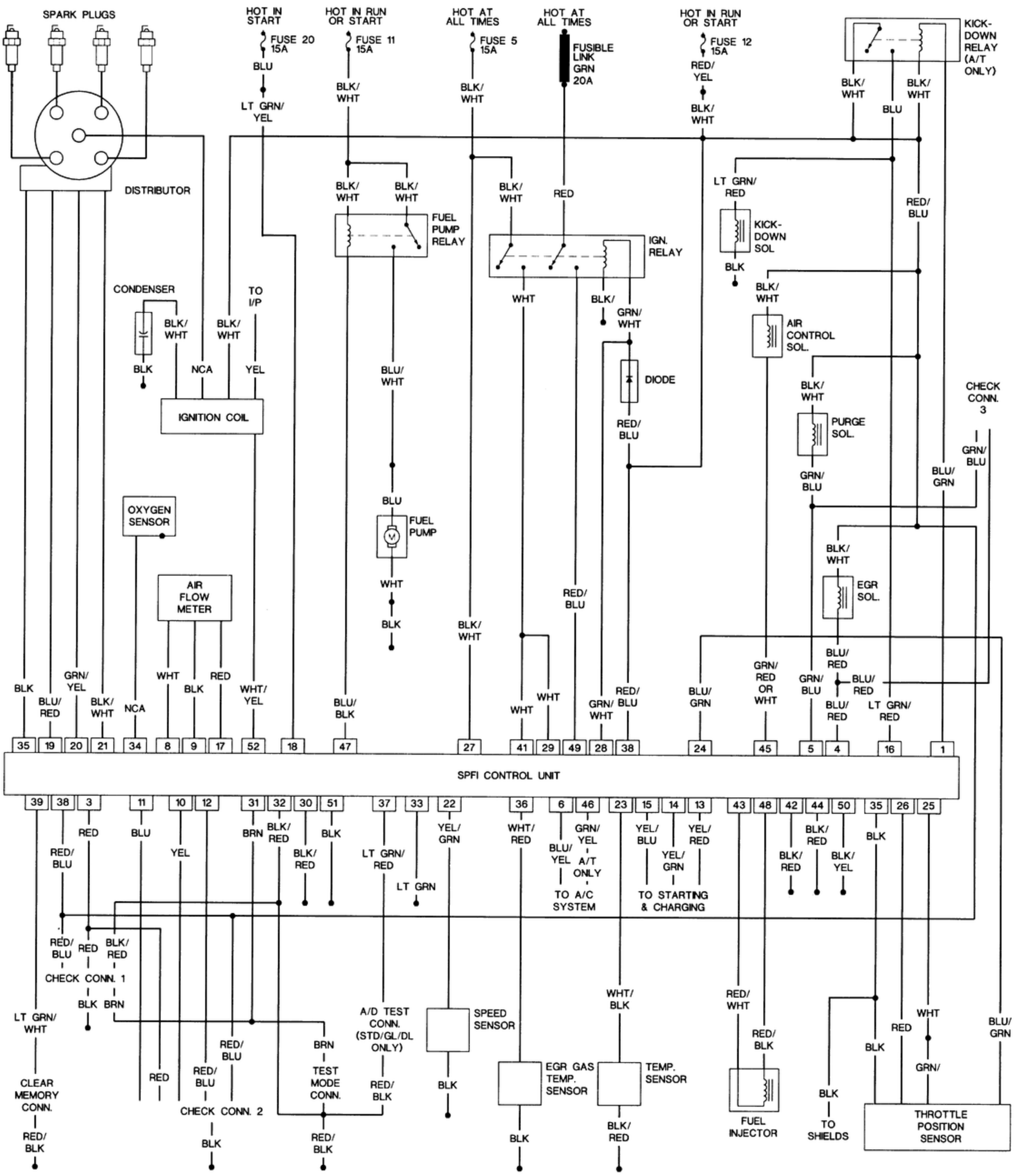
SPARK PLUGS
DISTRIBUTOR
HOT IN START
FUSE 20 15A
BLU
LT GRN/ YEL
HOT IN RUN OR START
FUSE 11 15A
BLK/ WHT
HOT AT ALL TIMES
FUSE 5 15A
BLK/ WHT
HOT AT ALL TIMES
FUSIBLE LINK GRN 20A
HOT IN RUN OR START
FUSE 12 15A
RED/ YEL
BLK/ WHT
KICK-DOWN RELAY (A/T ONLY)
BLK/ WHT
BLU
BLK/ WHT
BLK/ WHT
BLK/ WHT
FUEL PUMP RELAY
BLK/ WHT
RED
IGN. RELAY
WHT
BLK/
GRN/ WHT
DIODE
RED/ BLU
LT GRN/ RED
KICK-DOWN SOL
BLK
RED/ BLU
BLK/ WHT
AIR CONTROL SOL.
BLK/ WHT
PURGE SOL.
GRN/ BLU
CHECK CONN. 3
GRN/ BLU
BLU/ GRN
CONDENSER
BLK/ WHT
BLK/ WHT
TO I/P
BLK
NCA
YEL
IGNITION COIL
BLU/ WHT
BLU
FUEL PUMP
WHT
BLK
OXYGEN SENSOR
AIR FLOW METER
BLK/ WHT
EGR SOL.
RED/ BLU
BLK/ WHT
BLU/ RED
BLU/ RED
BLU/ RED
BLU/ GRN
GRN/ RED OR WHT
GRN/ BLU
LT GRN/ RED
BLK
GRN/ YEL
BLU/ RED
BLK/ WHT
NCA
WHT
BLK
RED
WHT/ YEL
BLU/ BLK
WHT
WHT
GRN/ WHT
RED/ BLU
35 19 20 21 34 8 9 17 52 18 47 27 41 29 49 28 38 24 45 5 4 16 1
SPFI CONTROL UNIT
39 38 3 11 10 12 31 32 30 51 37 33 22 36 6 46 23 15 14 13 43 48 42 44 50 35 26 25
RED/ BLU
RED
BLU
YEL
BRN
BLK/ RED
BLK/ RED
BLK
LT GRN/ RED
LT GRN
YEL/ GRN
WHT/ RED
BLU/ YEL
GRN/ YEL
A/T ONLY
TO A/C SYSTEM
YEL/ BLU
YEL/ GRN
YEL/ RED
TO STARTING & CHARGING
BLK/ RED
BLK/ RED
BLK/ YEL
BLK
RED/ BLU
RED
BLK/ RED
CHECK CONN. 1
BLK
BRN
LT GRN/ WHT
CLEAR MEMORY CONN.
RED/ BLK
RED
RED/ BLU
RED/ BLU
CHECK CONN. 2
BLK
BRN
TEST MODE CONN.
RED/ BLK
A/D TEST CONN. (STD/GL/DL ONLY)
RED/ BLK
SPEED SENSOR
BLK
EGR GAS TEMP. SENSOR
BLK
WHT/ BLK
TEMP. SENSOR
BLK/ RED
RED/ WHT
RED/ BLK
FUEL INJECTOR
BLK
TO SHIELDS
BLK
RED
WHT
GRN/
THROTTLE POSITION SENSOR
BLU/ GRN